NORTHPORT FMS #9 RENOVATIONS

2509 44th AVENUE
NORTHPORT, AL 35476

PROJECT INFORMATION:

OWNER:
ALABAMA ARMY NATIONAL GUARD
1720 CONG. WL DICKINSON DRIVE
MONTGOMERY, AL 36109
IFB NO: AC-22-B-0004-S

ARCHITECT:
SEAY, SEAY AND LITCHFIELD P.C.
ARCHITECTURAL DESIGN
CONSTRUCTION ADMINISTRATION
PHONE (334) 263-5162
FAX (334) 263-5170
1115 S. COURT STREET
MONTGOMERY, ALABAMA 36104

CIVIL:
PROFESSIONAL ENGINEERING
CONSULTANTS, L.L.C.
822 SOUTH McDONOUGH STREET
MONTGOMERY, ALABAMA 36104

STRUCTURAL:
BLACKBURN DANIELS O'BARR INC.
8805 CO. RD. 40,
LOWNDESBORO, AL 36752

MECHANICAL AND PLUMBING:
WHORTON ENGINEERING, INC.
25 SUMMERALL GATE ROAD
ANNISTON, ALABAMA 36205

ELECTRICAL:
GUNN & ASSOCIATES, P.C.
3102 HIGHWAY 14
MILLBROOK, ALABAMA 36054

VICINITY MAP

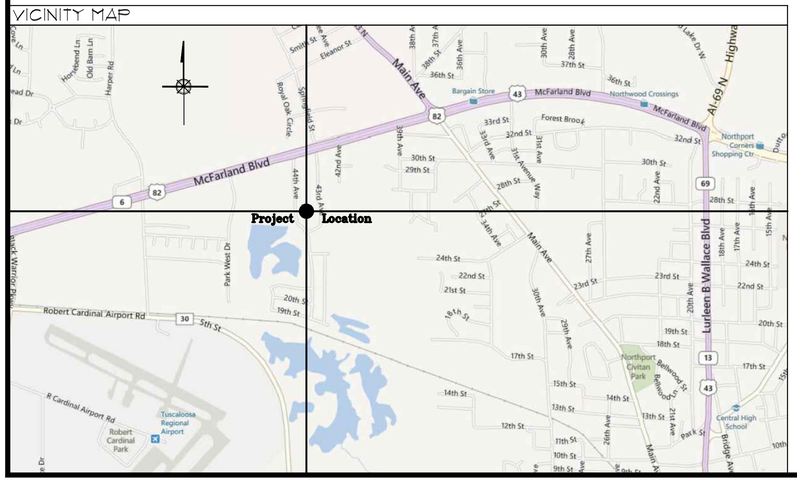

S|S|&|L
SEAY SEAY & LITCHFIELD, P.C.
architecture . interiors . planning . graphics

INDEX TO DRAWINGS (FMS #9)

SHEET NAME	DESCRIPTION	SHEET NAME	DESCRIPTION
			ELECTRICAL (CONT.)
T1.0	TITLE SHEET	E3.4	EQUIPMENT SCHEDULES
	CIVIL	E4.1	MAINTENANCE BUILDING FLOOR PLAN - AUXILIARY
C1.1	SITE DEMOLITION PLAN	E4.2	COMMUNICATION SYSTEM DETAILS
C2.1	SITE LAYOUT AND UTILITIES PLAN	E4.3	FIRE ALARM / MNS SINGLE LINE DIAGRAM DETAILS AND NOTES
C3.1	SITE GRADING AND DRAINAGE PLAN	E5.1	LUMINAIRE SCHEDULE
C4.1	SITE EROSION AND SEDIMENTATION CONTROL PLAN	E5.2	PANELBOARD SCHEDULES AND DETAILS
C5.1	SITE DETAILS	E5.3	PANELBOARD SCHEDULES
C6.1	SITE DETAILS	E6.1	RISER DIAGRAM POWER DISTRIBUTION
	STRUCTURAL	E6.2	GROUNDING DETAILS
S0.1	GENERAL NOTES, SCHEDULES, AND TYPICAL DETAILS		
S1.1	FOUNDATION PLAN EXISTING MAINTENANCE SHOP		
S1.2	FOUNDATION PLAN STORAGE BUILDING		
S1.3	ROOF FRAMING PLAN STORAGE BUILDING		
S1.4	ROOF FRAMING PLAN NEW WASH RACK		
S2.1	SECTIONS AND DETAILS		
S2.2	SECTIONS AND DETAILS		
	ARCHITECTURAL		
A1.0	GENERAL DEMOLITION NOTES & SPECIFIC NOTES		
A1.1	EXISTING FLOOR PLAN - DEMOLITION		
A2.1	NEW FLOOR PLAN		
A2.1B	NEW FLOOR PLAN - STORAGE BUILDING		
A2.1C	NEW WASH RACK FLOOR PLAN AND ELEVATIONS - BID ITEM A ALTERNATE NO. 1		
A2.2B	NEW STORAGE BUILDING ROOF PLAN		
A3.1	FINISH SCHEDULE, DOOR SCHEDULE, & WINDOW SCHEDULE		
A3.1B	FINISH AND DOOR SCHEDULE - STORAGE BUILDING		
A3.2	DETAILS		
A3.3	DETAILS		
A4.1	EXISTING ELEVATIONS - DEMOLITION		
A4.1B	NEW STORAGE BUILDING ELEVATIONS		
A4.2	NEW ELEVATIONS		
A5.1B	NEW STORAGE BUILDING - SECTION & DETAILS		
A5.1C	NEW WASH RACK - ROOF PLAN & SECTION		
A5.2	DETAIL SECTIONS		
A5.2B	WALL SECTIONS - NEW STORAGE BUILDING		
A6.1	ENLARGED PLANS, ELEVATIONS, AND DETAILS		
A6.2	ENLARGED PLANS, ELEVATIONS, AND DETAILS		
A8.1	REFLECTED CEILING PLAN - MAINTENANCE SHOP		
A8.1B	REFLECTED CEILING PLAN - NEW STORAGE BUILDING		
A9.1	NEW FINISH FLOOR PATTERN PLAN		
	PLUMBING		
P1.1	PLUMBING SCHEDULES, LEGEND, AND NOTES		
P1.2	PLUMBING DETAILS		
P2.1	PLUMBING DEMOLITION PLAN		
P2.2	PLUMBING DEMOLITION DETAILS		
P3.1	REVISED WASTE, WATER, AND GAS PLUMBING PLAN		
P4.1	REVISED OIL/LUBE AND AIR PIPING PLAN		
P5.1	REVISED WASTE & WATER PLUMBING RISER DIAGRAMS		
P5.2	REVISED GAS PLUMBING RISER DIAGRAM		
	MECHANICAL		
M1.1	HVAC LEGEND, NOTES, AND SCHEDULES		
M1.2	HVAC SCHEDULES		
M1.3	HVAC SCHEDULES AND DETAILS		
M1.4	HVAC SCHEDULES AND DETAILS		
M2.1	HVAC DETAILS		
M2.2	HVAC DETAILS		
M2.3	HVAC DETAILS		
M2.4	HVAC DETAILS		
M2.5	HVAC DETAILS		
M3.1	HVAC DEMOLITION PLAN		
M4.1	HVAC REVISED PLAN		
M5.1	STORAGE BLDG. HVAC PLAN		
	ELECTRICAL		
E0.1	ELECTRICAL LEGEND		
E0.2	ELECTRICAL LEGEND NOTES		
E1.1	SITE PLAN - ELECTRICAL		
E1.2	SITE PLAN DETAILS		
E1.3	EXISTING MAINTENANCE BUILDING FLOOR PLAN DEMOLITION - LIGHTING		
E1.4	MAINTENANCE AND METAL BUILDING DEMOLITION		
E2.1	MAINTENANCE BUILDING FLOOR PLAN LIGHTING		
E2.2	METAL BUILDING #1, METAL BUILDING #2, WASH RACK LIGHTING		
E2.3	LIGHTING CONTROLS		
E3.1	MAINTENANCE BUILDING FLOOR PLAN - POWER		
E3.2	MAINTENANCE BUILDING FLOOR PLAN EQUIPMENT POWER		
E3.3	NEW METAL BUILDING #1, BUILDING #2, WASH RACK POWER		

SEAY SEAY & LITCHFIELD
1115 South Court Street
Montgomery, AL 36104
(334) 263-5162

Owner:
The Armory Commission of Alabama
1720 Cong WL Dickinson Drive
Montgomery, AL 36109

SS&L Job Number
14057

IFB Job Number
AC-22-B-0004-S

Date
JANUARY 2022

Drawn By
CMI, SS, TS, DC

Checked By
WRO

Revised
-

Project Title
NORTHPORT
FMS #9 RENOVATIONS
NORTHPORT, AL

Sheet Title
TITLE SHEET

Sheet Number
T1.0

STATE OF ALABAMA
MONTGOMERY
Jim H. Seay, AIA
1846
Gregory A. O'Neal
4043
Wesley R. Osmer
4244
ALABAMA
REGISTERED ARCHITECTS

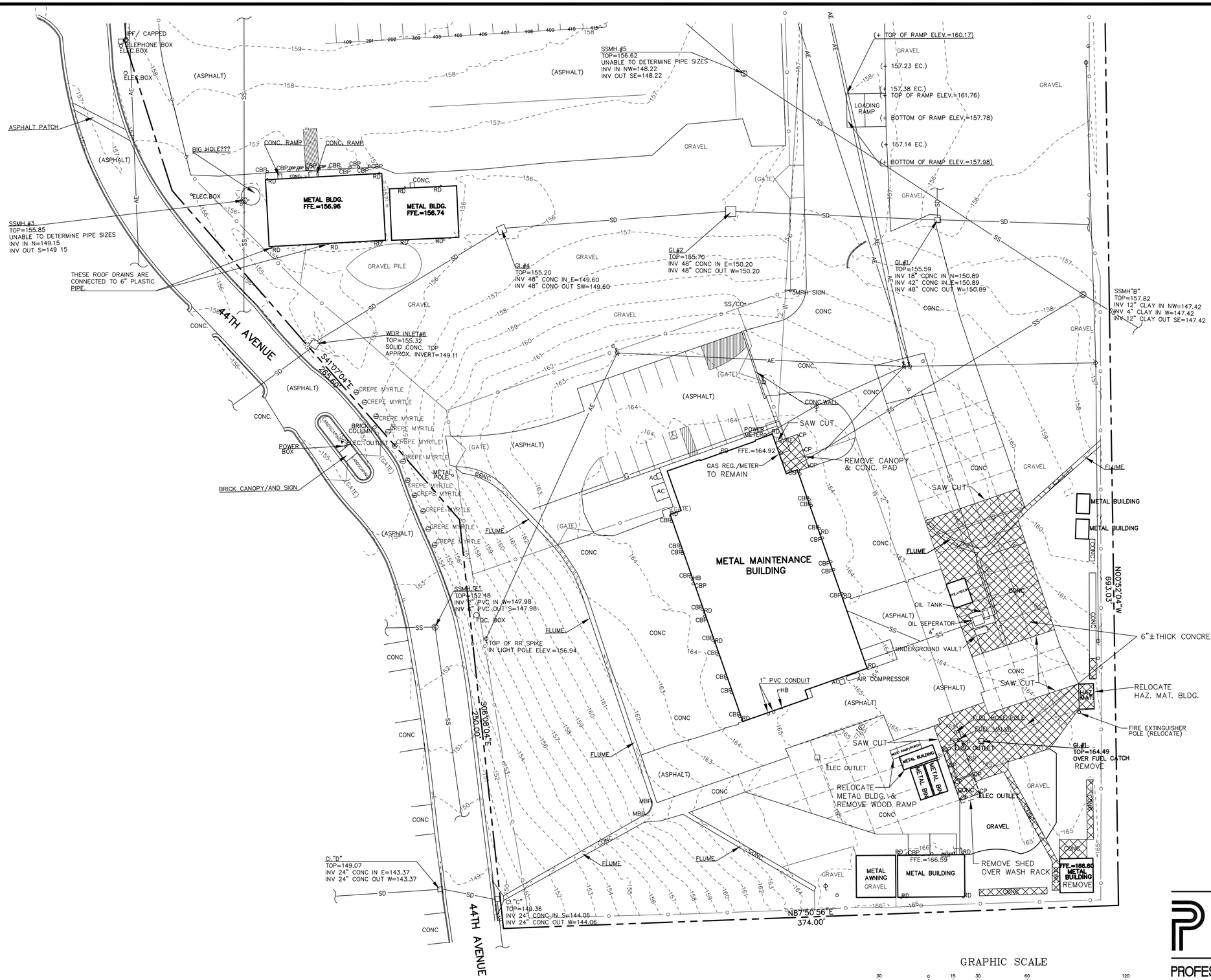

LEGEND

DESCRIPTION	EXISTING	REMOVE
BUILDING	▭	
CURB	———	
CURB & GUTTER	═══	
CONCRETE PAVEMENT	▭	▨
ASPHALT PAVEMENT	▭	▨
SANITARY SEWER MANHOLE	Ⓢ	
SANITARY SEWER LINE	——SS——	
GAS METER	GM	
GAS LINE	——G——	
STORM MANHOLE	Ⓓ	
GRATE INLET	□	
AREA INLET	□	
STORM DRAIN LINE	——SD——	
FRENCH DRAIN LINE	——FD——	
CLEAN-OUT	CO	
WATER LINE	——W——	
ELECTRIC (AERIAL)	——AE——	
ELECTRIC (UNDERGROUND)	——UE——	
WATER METER	WM	
FIRE HYDRANT		
POWER POLE		
LIGHT POLE		
TELEPHONE POLE		
GUY WIRE		
TRAFFIC SIGN		
BUMPER POST	BP	
FLAG POLE		
FLOOD LIGHT		
BUSH		
HEDGE ROW		
TREE		
IRON PIN FOUND	IPF	
FENCE	—o—o—	—o—o—o—

NOTES:

1. THE UNDERGROUND UTILITIES SHOWN HAVE BEEN LOCATED FROM FIELD SURVEY INFORMATION AND EXISTING DRAWINGS. THE SURVEYOR MAKES NO GUARANTEE THAT THE UNDERGROUND UTILITIES SHOWN COMPRISE ALL SUCH UTILITIES IN THE AREA, EITHER IN SERVICE OR ABANDONED. THE SURVEYOR FURTHER DOES NOT WARRANT THAT THE UNDERGROUND UTILITIES SHOWN ARE IN THE EXACT LOCATION INDICATED ALTHOUGH HE DOES CERTIFY THAT THEY ARE LOCATED AS ACCURATELY AS POSSIBLE FROM THE INFORMATION AVAILABLE. THE SURVEYOR HAS NOT PHYSICALLY LOCATED ALL OF THE UNDERGROUND UTILITIES.

GRAPHIC SCALE

30 0 15 30 60 120

(IN FEET)
1 inch = 30 ft.

PEC
PROFESSIONAL ENGINEERING CONSULTANTS, LLC
822 South McDonough Street
Montgomery, Alabama 36104
Phone: (334) 262-7307
Fax: (334) 262-7309

PEC JOB #_____21-028_____

SEAY SEAY & LITCHFIELD
1115 South Court Street
Montgomery, AL 36104
(334) 263-5162

Owner:
The Armory Commission of Alabama
1720 Cong WL Dickinson Drive
Montgomery, AL 36109

SS&L Job Number
14057

IFB Job Number
AC-22-B-0004-S

Date
JANUARY 2022

Drawn By
SBG

Checked By
SBG

Revised
-

Project Title

NORTHPORT FMS #9 RENOVATIONS NORTHPORT, AL

Sheet Title

SITE DEMOLITION PLAN

Sheet Number

C1.1

LICENSED PROFESSIONAL ENGINEER No. 5935 ALABAMA PATRICK A. MOSELEY

1/7/22

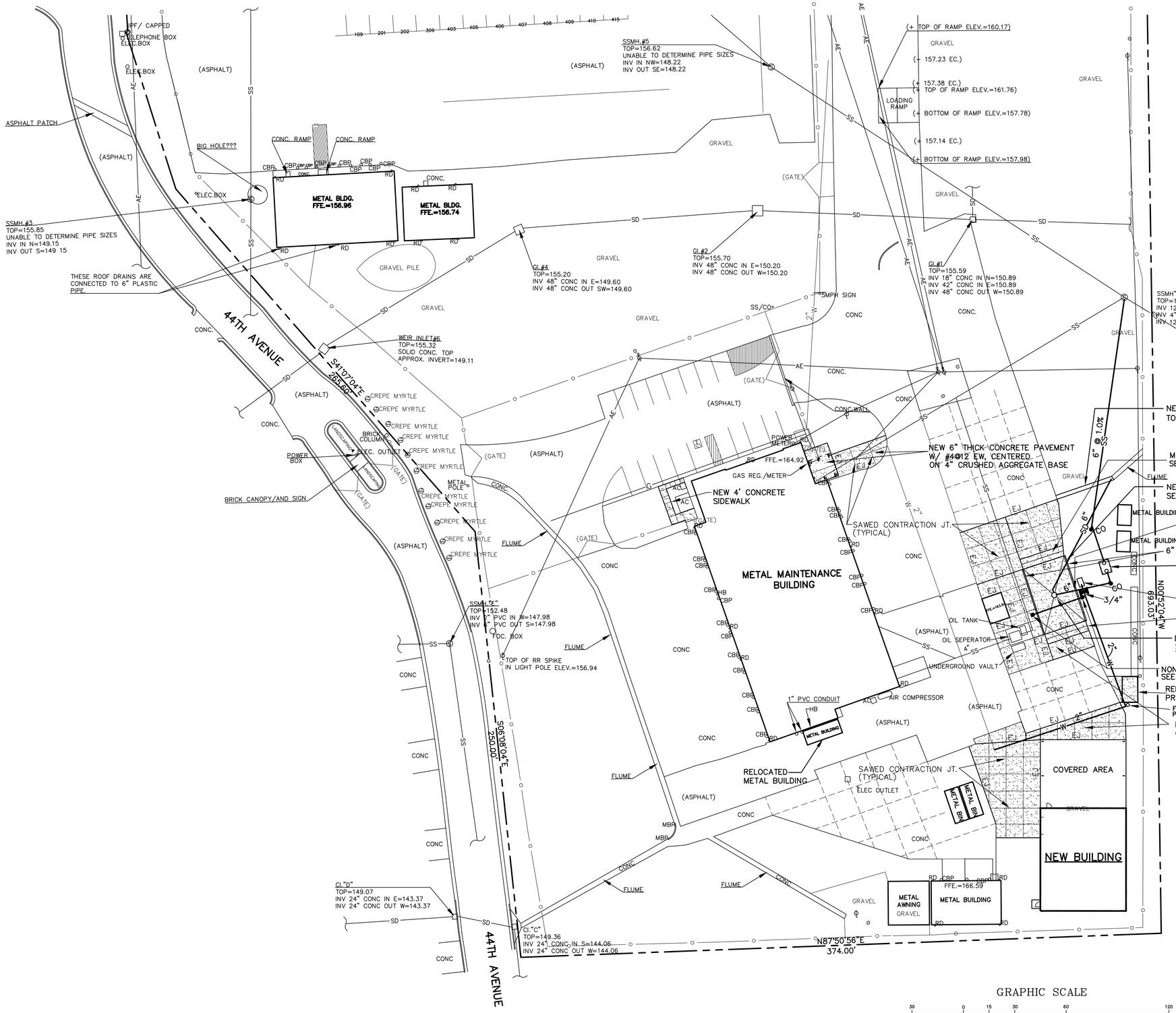

LEGEND

DESCRIPTION	EXISTING	NEW
BUILDING		
CURB		
CURB & GUTTER		
CONCRETE PAVEMENT		
ASPHALT PAVEMENT		
ASPHALT PAVEMENT (LIGHT DUTY)		
ASPHALT PAVEMENT (HEAVY DUTY)		
SANITARY SEWER MANHOLE	Ⓢ	
SANITARY SEWER LINE	SS	
GAS METER	GM	
GAS LINE	G	
STORM MANHOLE	Ⓓ	
GRATE INLET	□	
AREA INLET	□	
STORM DRAIN LINE	SD	
CLEAN-OUT	CO	CO
WATER LINE	W	
ELECTRIC (AERIAL)	AE	
ELECTRIC (UNDERGROUND)	UE	
WATER METER	WM	
FIRE HYDRANT		
WATER VALVE & BOX		
POWER POLE		
LIGHT POLE		
TELEPHONE POLE		
GUY WIRE		
TRAFFIC SIGN		
BUMPER POST	BP	
FLAG POLE		
FLOOD LIGHT		
BUSH		
HEDGE ROW		
TREE		
IRON PIN FOUND	IPF	
FENCE		

NOTES:

1. THE UNDERGROUND UTILITIES SHOWN HAVE BEEN LOCATED FROM FIELD SURVEY INFORMATION AND EXISTING DRAWINGS. THE SURVEYOR MAKES NO GUARANTEE THAT THE UNDERGROUND UTILITIES SHOWN COMPRISE ALL SUCH UTILITIES IN THE AREA, EITHER IN SERVICE OR ABANDONED. THE SURVEYOR FURTHER DOES NOT WARRANT THAT THE UNDERGROUND UTILITIES SHOWN ARE IN THE EXACT LOCATION INDICATED ALTHOUGH HE DOES CERTIFY THAT THEY ARE LOCATED AS ACCURATELY AS POSSIBLE FROM THE INFORMATION AVAILABLE. THE SURVEYOR HAS NOT PHYSICALLY LOCATED ALL OF THE UNDERGROUND UTILITIES.
2. NON-FREEZE GROUND HYDRANTS SHALL BE "JAY R. SMITH FIG. 5950" OR APPROVED EQUAL. HYDRANT IN LAWN AREA SHALL BE SURROUNDED WITH A CONCRETE COLLAR 2'x2'x6" THICK. PROVIDE WITH TAPPED DRAIN HOLES WITH 2 CU. FT 3/4" SIZE WASHED GRAVEL. DEPTH OF BURY IS 2 FEET.
3. MOUNT DIVERTER VALVE CONTROL BOX, POWER SUPPLY AND PIPING ON UNISTRUT IN 3'x5'x4" THICK CONCRETE PAD.

GRAPHIC SCALE

30 0 15 30 60 120

(IN FEET)
1 inch = 30 ft.

PEC
PROFESSIONAL ENGINEERING CONSULTANTS, LLC
822 South McDonough Street
Montgomery, Alabama 36104
Phone: (334) 262-7307
Fax: (334) 262-7309

PEC JOB #_____21-028_____

SEAY SEAY & LITCHFIELD
1115 South Court Street
Montgomery, AL 36104
(334) 263-5162

Owner:
The Armory Commission of Alabama
1720 Cong WL Dickinson Drive
Montgomery, AL 36109

SS&L Job Number
14057

IFB Job Number
AC-22-B-0004-S

Date
JANUARY 2022

Drawn By
SBG

Checked By
SBG

Revised
-

Project Title

NORTHPORT
FMS #9 RENOVATIONS
NORTHPORT, AL

Sheet Title

SITE LAYOUT AND UTILITIES PLAN

Sheet Number

C2.1

ALABAMA LICENSED PROFESSIONAL ENGINEER
No. 5935
PATRICK A. MOSELEY
1/7/22

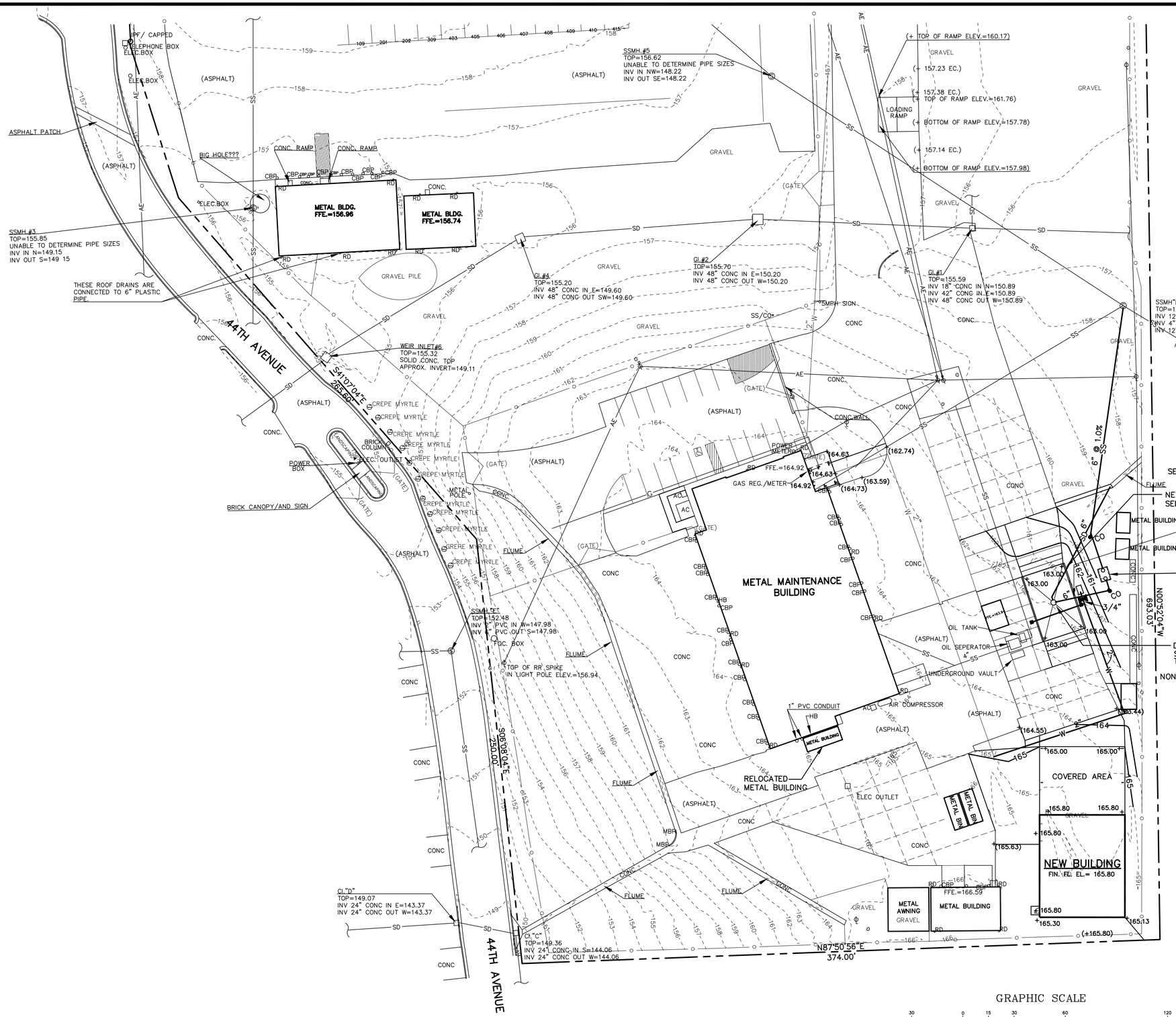

LEGEND

DESCRIPTION	EXISTING	NEW
BUILDING		
CURB		
CURB & GUTTER		
CONCRETE PAVEMENT		
ASPHALT PAVEMENT		
SANITARY SEWER MANHOLE	S	
SANITARY SEWER LINE	SS	
GAS METER	GM	
GAS LINE	G	
STORM MANHOLE	D	
GRATE INLET		
AREA INLET		
STORM DRAIN LINE	SD	
STORM LINE W/OPEN JOINTS		
CLEAN-OUT	CO	
WATER LINE	W	W
ELECTRIC (AERIAL)	AE	
ELECTRIC (UNDERGROUND)	UE	
WATER METER	WM	
FIRE HYDRANT		
POWER POLE		
LIGHT POLE		
TELEPHONE POLE		
GUY WIRE		
TRAFFIC SIGN		
BUMPER POST	BP	
FLAG POLE		
FLOOD LIGHT		
BUSH		
HEDGE ROW		
TREE		
IRON PIN FOUND	PF	
FENCE		
GRADE CONTOUR	162	162
SPOT ELEVATION	+(162.50)	+162.50

NOTES:

1. THE UNDERGROUND UTILITIES SHOWN HAVE BEEN LOCATED FROM FIELD SURVEY INFORMATION AND EXISTING DRAWINGS. THE SURVEYOR MAKES NO GUARANTEE THAT THE UNDERGROUND UTILITIES SHOWN COMPRISE ALL SUCH UTILITIES IN THE AREA, EITHER IN SERVICE OR ABANDONED. THE SURVEYOR FURTHER DOES NOT WARRANT THAT THE UNDERGROUND UTILITIES SHOWN ARE IN THE EXACT LOCATION INDICATED ALTHOUGH HE DOES CERTIFY THAT THEY ARE LOCATED AS ACCURATELY AS POSSIBLE FROM THE INFORMATION AVAILABLE. THE SURVEYOR HAS NOT PHYSICALLY LOCATED ALL OF THE UNDERGROUND UTILITIES.

GRAPHIC SCALE

30 0 15 30 60 120

(IN FEET)
1 inch = 30 ft.

PEC
PROFESSIONAL ENGINEERING CONSULTANTS, LLC
822 South McDonough Street
Montgomery, Alabama 36104
Phone: (334) 262-7307
Fax: (334) 262-7309

PEC JOB #_____21-028_____

SEAY SEAY & LITCHFIELD
1115 South Court Street
Montgomery, AL 36104
(334) 263-5162

Owner:
The Armory Commission of Alabama
1720 Cong WL Dickinson Drive
Montgomery, AL 36109

SS&L Job Number
14057

IFB Job Number
AC-22-B-0004-S

Date
JANUARY 2022

Drawn By
SBG

Checked By
SBG

Revised
-

Project Title

NORTHPORT
FMS #9 RENOVATIONS
NORTHPORT, AL

Sheet Title

SITE GRADING AND DRAINAGE PLAN

Sheet Number

C3.1

ALABAMA LICENSED No. 5935 PROFESSIONAL ENGINEER PATRICK A. MOSELEY

1/7/22

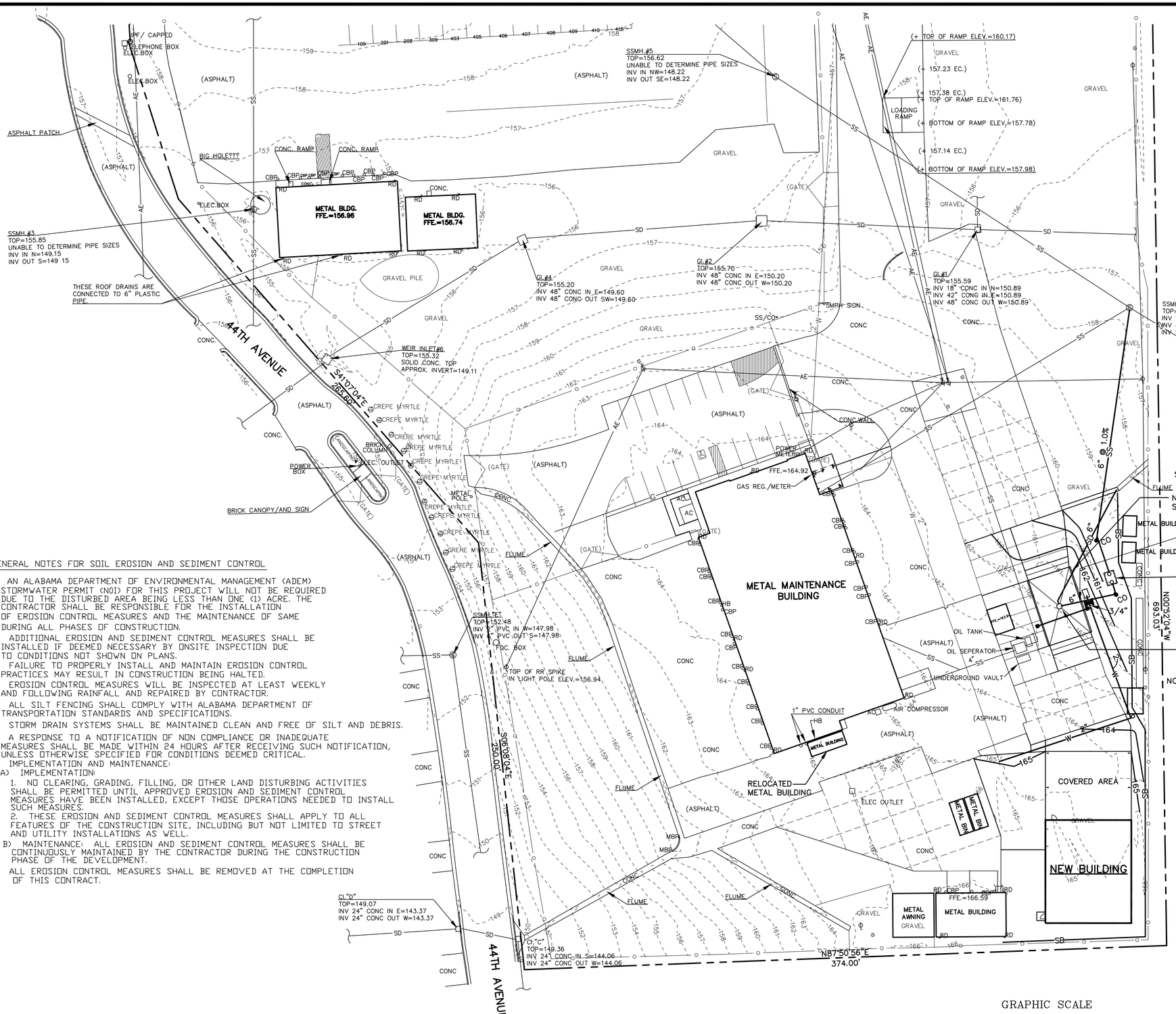

GENERAL NOTES FOR SOIL EROSION AND SEDIMENT CONTROL

1. AN ALABAMA DEPARTMENT OF ENVIRONMENTAL MANAGEMENT (ADEM) STORMWATER PERMIT (NOI) FOR THIS PROJECT WILL NOT BE REQUIRED DUE TO THE DISTURBED AREA BEING LESS THAN ONE (1) ACRE. THE CONTRACTOR SHALL BE RESPONSIBLE FOR THE INSTALLATION OF EROSION CONTROL MEASURES AND THE MAINTENANCE OF SAME DURING ALL PHASES OF CONSTRUCTION.
2. ADDITIONAL EROSION AND SEDIMENT CONTROL MEASURES SHALL BE INSTALLED IF DEEMED NECESSARY BY ONSITE INSPECTION DUE TO CONDITIONS NOT SHOWN ON PLANS.
3. FAILURE TO PROPERLY INSTALL AND MAINTAIN EROSION CONTROL PRACTICES MAY RESULT IN CONSTRUCTION BEING HALTED.
4. EROSION CONTROL MEASURES WILL BE INSPECTED AT LEAST WEEKLY AND FOLLOWING RAINFALL AND REPAIRED BY CONTRACTOR.
5. ALL SILT FENCING SHALL COMPLY WITH ALABAMA DEPARTMENT OF TRANSPORTATION STANDARDS AND SPECIFICATIONS.
6. STORM DRAIN SYSTEMS SHALL BE MAINTAINED CLEAN AND FREE OF SILT AND DEBRIS.
7. A RESPONSE TO A NOTIFICATION OF NON COMPLIANCE OR INADEQUATE MEASURES SHALL BE MADE WITHIN 24 HOURS AFTER RECEIVING SUCH NOTIFICATION, UNLESS OTHERWISE SPECIFIED FOR CONDITIONS DEEMED CRITICAL.
8. IMPLEMENTATION AND MAINTENANCE:
   - A) IMPLEMENTATION:
     1. NO CLEARING, GRADING, FILLING, OR OTHER LAND DISTURBING ACTIVITIES SHALL BE PERMITTED UNTIL APPROVED EROSION AND SEDIMENT CONTROL MEASURES HAVE BEEN INSTALLED, EXCEPT THOSE OPERATIONS NEEDED TO INSTALL SUCH MEASURES.
     2. THESE EROSION AND SEDIMENT CONTROL MEASURES SHALL APPLY TO ALL FEATURES OF THE CONSTRUCTION SITE, INCLUDING BUT NOT LIMITED TO STREET AND UTILITY INSTALLATIONS AS WELL.
   - B) MAINTENANCE: ALL EROSION AND SEDIMENT CONTROL MEASURES SHALL BE CONTINUOUSLY MAINTAINED BY THE CONTRACTOR DURING THE CONSTRUCTION PHASE OF THE DEVELOPMENT.
9. ALL EROSION CONTROL MEASURES SHALL BE REMOVED AT THE COMPLETION OF THIS CONTRACT.

GRAPHIC SCALE

30 0 15 30 60 120

(IN FEET)
1 inch = 30 ft.

LEGEND

DESCRIPTION	EXISTING	NEW
BUILDING		
CURB		
CURB & GUTTER		
CONCRETE PAVEMENT		
ASPHALT PAVEMENT		
SANITARY SEWER MANHOLE	S	
SANITARY SEWER LINE	SS	
GAS METER	G	
GAS LINE	G	
STORM MANHOLE	D	
GRATE INLET		
AREA INLET		
STORM DRAIN LINE	SD	
STORM LINE W/OPEN JOINTS		
CLEAN-OUT	CO	
WATER LINE	W	W
ELECTRIC (AERIAL)	AE	
ELECTRIC (UNDERGROUND)	UE	
WATER METER	WM	
FIRE HYDRANT		
POWER POLE		
LIGHT POLE		
TELEPHONE POLE		
GUY WIRE		
TRAFFIC SIGN		
BUMPER POST	BP	
FLAG POLE		
FLOOD LIGHT		
BUSH		
HEDGE ROW		
TREE		
IRON PIN FOUND	IPF	
FENCE		
GRADE CONTOUR	162	162
SILT BARRIER	SB	SB

SEAY SEAY & LITCHFIELD
1115 South Court Street
Montgomery, AL 36104
(334) 263-5162

Owner:
The Armory Commission of Alabama
1720 Cong WL Dickinson Drive
Montgomery, AL 36109

SS&L Job Number
14057

IFB Job Number
AC-22-B-0004-S

Date
JANUARY 2022

Drawn By
SBG

Checked By
SBG

Revised
-

Project Title
NORTHPORT ARMORY
FMS #9 RENOVATIONS
NORTHPORT, AL

Sheet Title
SITE EROSION AND SEDIMENTATION CONTROL PLAN

Sheet Number
C4.1

PEC
PROFESSIONAL ENGINEERING CONSULTANTS, LLC
822 South McDonough Street
Montgomery, Alabama 36104
Phone: (334) 262-7307
Fax: (334) 262-7309

PEC JOB # 21-028

ALABAMA LICENSED No. 5935 PROFESSIONAL ENGINEER PATRICK A. MOSLEY

1/7/22

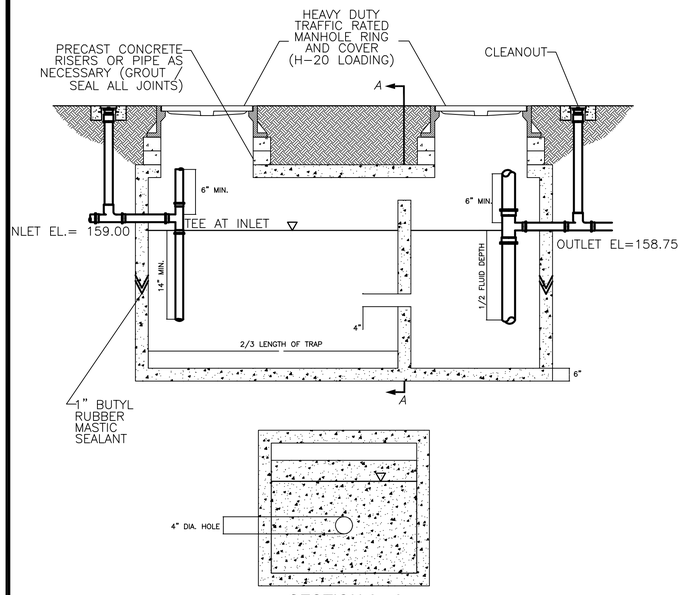

SECTION A - A

NOTES:

1. MANHOLE RING AND COVERS SHALL NOT BE COVERED, OR OBSCURED BY LANDSCAPING, PAVEMENT, ETC.
2. INLET AND OUTLET PIPES SHALL BE SCHEDULE 40 PVC, AND SHALL NOT BE COVERED OR CAPPED.
3. INLET PIPE MUST BE A MINIMUM OF 6" DIAMETER. VERTICAL PIPE ON OUTLET SIDE MUST BE A MINIMUM OF 6" IN DIAMETER.
4. MINIMUM SIZE: 1000 GALLONS.

TYPICAL OIL/GRIT SEPARATOR

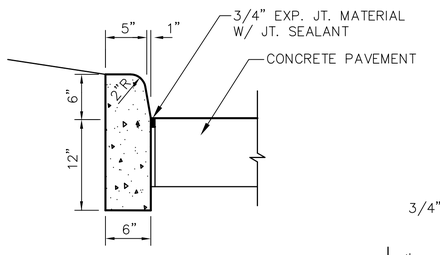

TYPICAL CONCRETE STRAIGHT CURB

NTS

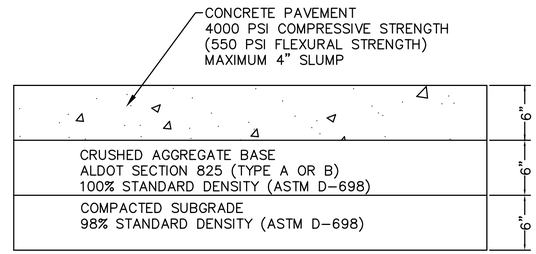

RIGID PAVEMENT SECTION

NTS

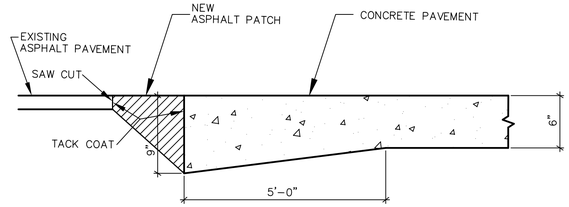

THICKENED EDGE DETAIL

NTS

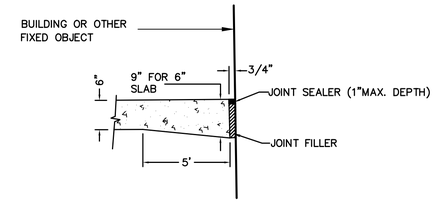

EXPANSION JOINT (EJ)

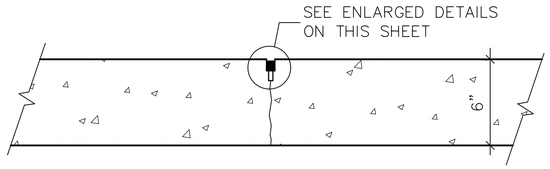

SAW CUT CONTRACTION JOINT (CTRJ)

N.T.S.

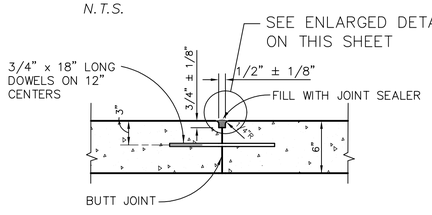

NOTE: INSTALL CONSTRUCTION JOINTS AT THE END OF EACH DAY'S PAVING OPERATION AND AT OTHER POINTS WHERE PAVING IS DISCONTINUED LONG ENOUGH FOR CONCRETE TO SET. LOCATE CONSTRUCTION JOINTS IN PLACE OF CONTRACTION JOINTS.

CONSTRUCTION JOINT DETAIL (CJ)

NTS

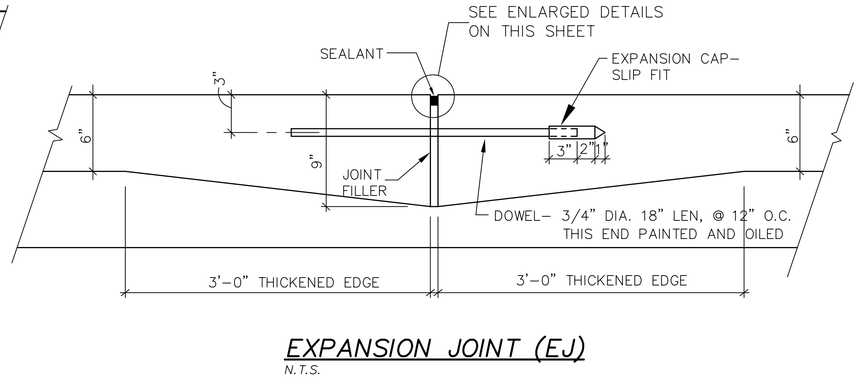

EXPANSION JOINT (EJ)

N.T.S.

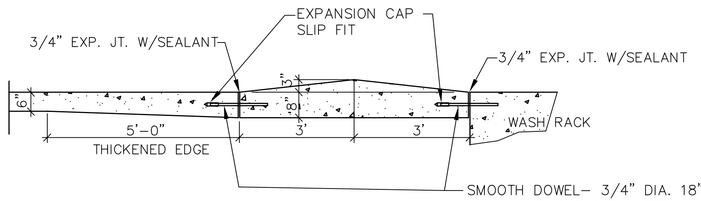

MOUNTABLE CURB DETAIL

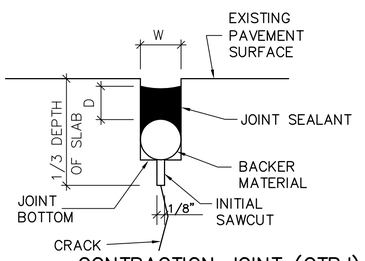

CONTRACTION JOINT (CTRJ)

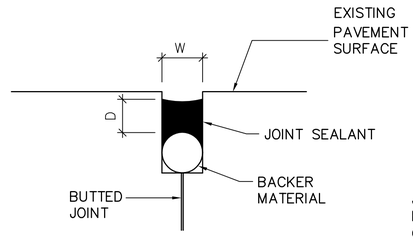

CONSTRUCTION JOINT (CJ)

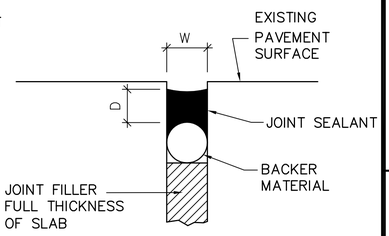

EXPANSION JOINT (EJ)

W= WIDTH OF SEALANT RESERVOIR (1/2" MIN, 5/8" MAX.)
D= DEPTH OF SEALANT; 0.5W FOR SILICONE SEALANT
DIAMETER OF BACKER MATERIAL= W + 1/8"

NOTE:
TOP OF SEALANT SHALL BE 1/4" TO 1/16" BELOW TOP OF PAVEMENT

JOINT SEALANT DETAILS (BACKER MATERIAL)

N.T.S.

NOTE: USE IN NEW 6" THICK VEHICULAR PAVEMENT

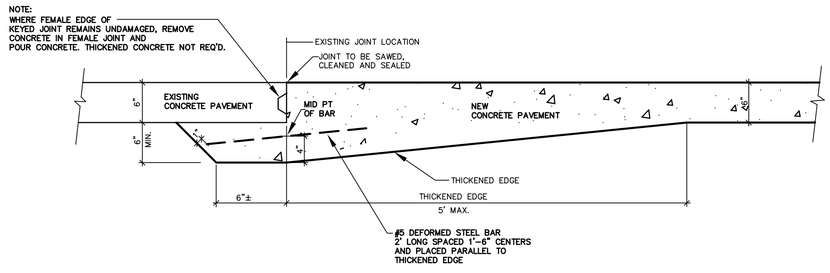

SPECIAL JOINT BETWEEN NEW AND EXISTING CONCRETE

TRANSVERSE OR LONGITUDINAL
KEYED OR SAWED CONTRACTION

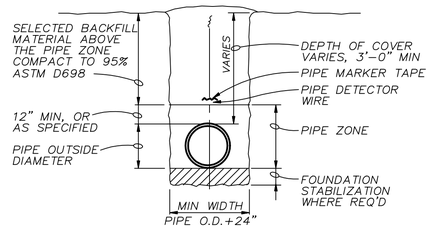

TYPICAL TRENCH

N.T.S.

PEC
PROFESSIONAL ENGINEERING CONSULTANTS, LLC
822 South McDonough Street
Montgomery, Alabama 36104
Phone: (334) 262-7307
Fax: (334) 262-7309

PEC JOB #_____21-028_____

ALABAMA LICENSED No. 5935 PROFESSIONAL ENGINEER PATRICK A. MOSCELLA
1/7/22

SEAY SEAY & LITCHFIELD
1115 South Court Street
Montgomery, AL 36104
(334) 263-5162

Owner:
The Armory Commission of Alabama
1720 Cong WL Dickinson Drive
Montgomery, AL 36109

SS&L Job Number
14057

IFB Job Number
AC-22-B-0004-S

Date
JANUARY 2022

Drawn By
SBG

Checked By
SBG

Revised
-

Project Title
NORTHPORT
FMS #9 RENOVATIONS
NORTHPORT, AL

Sheet Title
SITE DETAILS

Sheet Number
C5.1

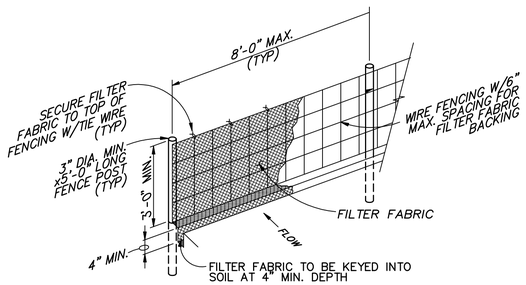

SILT FENCE DETAIL

NTS

NOTE: CONTRACTOR SHALL INSTALL AND MAINTAIN SILT FENCES WHERE SHOWN ON THE DRAWINGS PRIOR TO ALLOWING ANY CONSTRUCTION ACTIVITIES TO COMMENCE

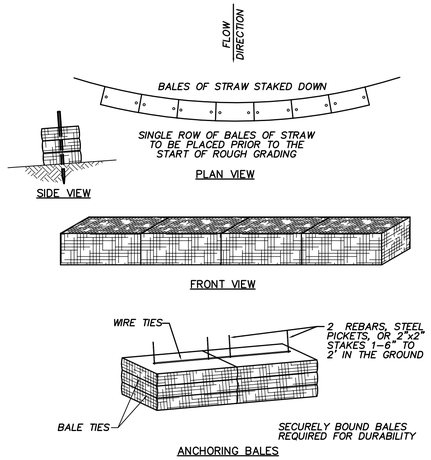

TEMPORARY STRAW BALE SEDIMENT BARRIER

NTS

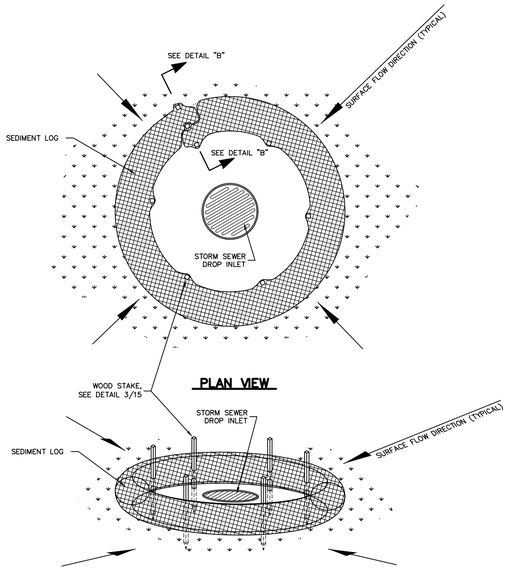

SEDIMENT LOGS DROP INLET PROTECTION

NTS

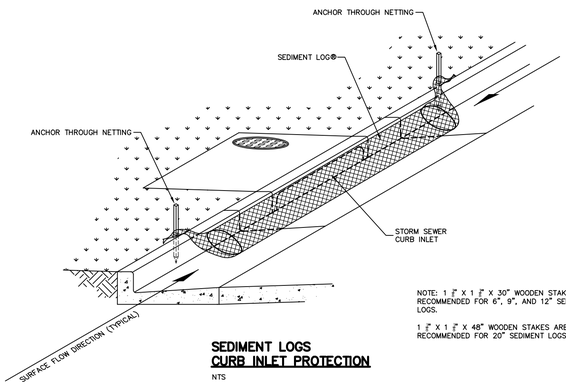

SEDIMENT LOGS CURB INLET PROTECTION

NTS

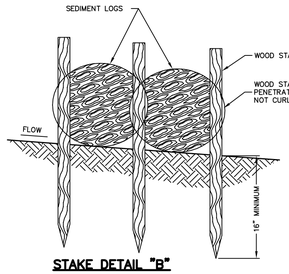

STAKE DETAIL "B"

NTS

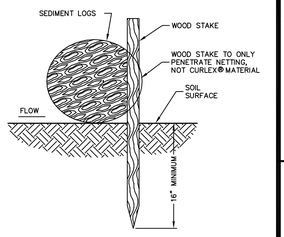

STAKE DETAIL "A"

NTS

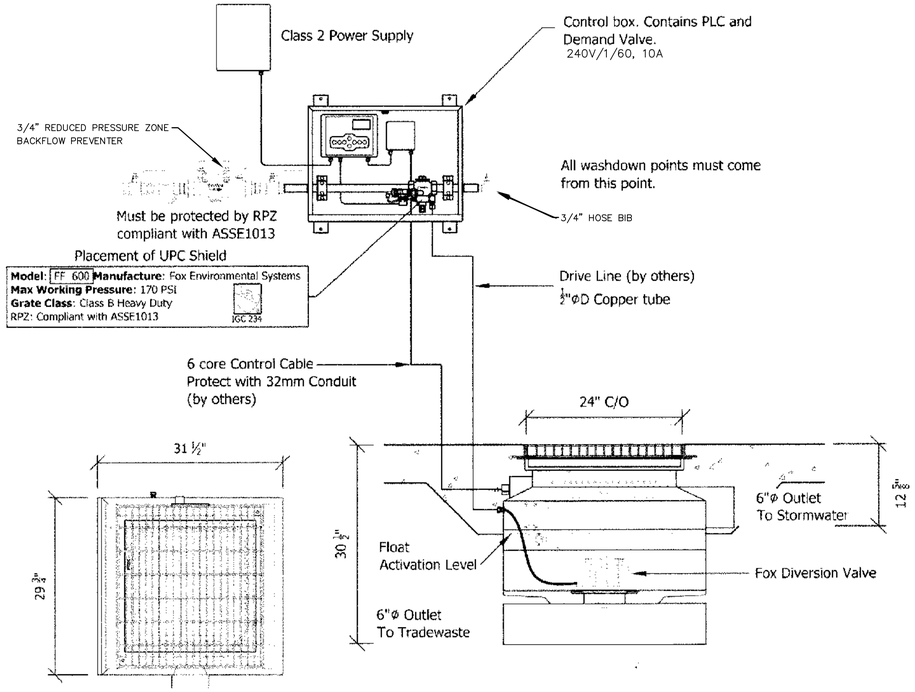

NOTE:
ALL ABOVEGROUND WATER PIPE SHALL BE WRAPPED WITH HEAT TAPE AND INSULATED TO PREVENT FREEZING.

WASH RACK DIVERTER VALVE DETAIL

NOT TO SCALE

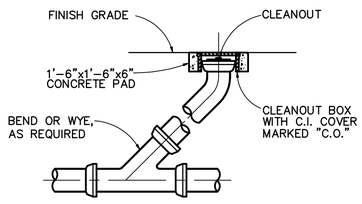

TYPICAL CLEANOUT DETAIL

NTS

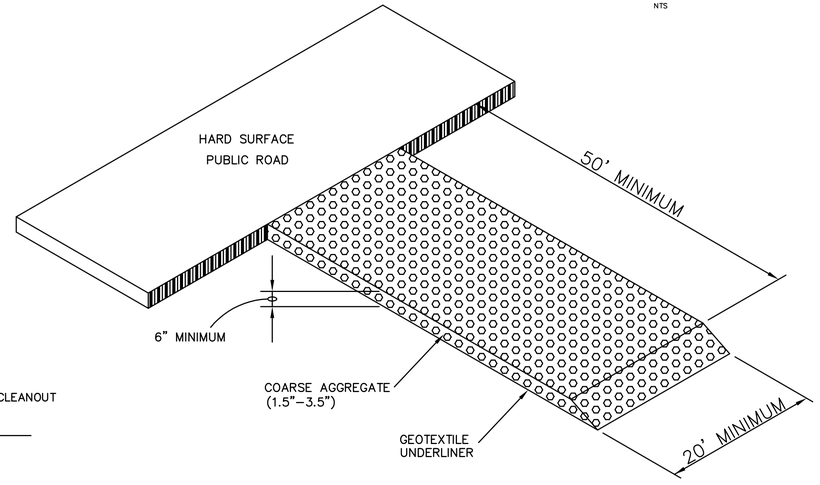

NOTE: UNLESS SHOWN OTHERWISE ON PLANS, CONTRACTOR HAS OPTION ON EXACT LOCATION OF CONSTRUCTION EXIT.

STABILIZED CRUSHED STONE CONSTRUCTION EXIT

NOT TO SCALE

PEC
PROFESSIONAL ENGINEERING CONSULTANTS, LLC
822 South McDonough Street
Montgomery, Alabama 36104
Phone: (334) 262-7307
Fax: (334) 262-7309

PEC JOB #_____21-028_____

SEAY SEAY & LITCHFIELD
1115 South Court Street
Montgomery, AL 36104
(334) 263-5162

Owner:
The Armory Commission of Alabama
1720 Cong WL Dickinson Drive
Montgomery, AL 36109

SS&L Job Number
14057

IFB Job Number
AC-22-B-0004-S

Date
JANUARY 2022

Drawn By
SBG

Checked By
SBG

Revised
-

Project Title
NORTHPORT
FMS #9 RENOVATIONS
NORTHPORT, AL

Sheet Title
SITE DETAILS

Sheet Number
C6.1

ALABAMA LICENSED No. 5935 PROFESSIONAL ENGINEER PATRICK A. MOSELEY
1/7/22

LINTEL SCHEDULE

MARK OR LOCATION	MAX. SPAN	TYPE	SIZE	REINFORCEMENT	REMARKS
8"CMU	4'–0"	U–BLOCK	8"x8"x16"	#5 TOP & BOTTOM	8" HIGH U–BLOCK
8"CMU	6'–4"	U–BLOCK	8"x16"x16"	2–#5 TOP & BOTTOM	16" HIGH U–BLOCK
8"CMU	8'–0"	U–BLOCK	8"x24"x16"	2–#5 TOP & BOTTOM	24" HIGH U–BLOCK
12"CMU	4'–0"	U–BLOCK	12"x8"x16"	#5 TOP & BOTTOM	8" HIGH U–BLOCK
12"CMU	6'–4"	U–BLOCK	12"x16"x16"	2–#5 TOP & BOTTOM	16" HIGH U–BLOCK
BRICK	8'–0"	STEEL ANGLE	∠7x4x$^3/_8$	–––––	BEAR 8"MIN. EA. END

NOTES:

1. UNLESS NOTED OTHERWISE, BEAR 8" HIGH U–BLOCKS 8" EA. END AND 16"&24" HIGH U–BLOCKS 16" EACH END.
2. FILL CELLS WITH CONCRETE FULL HEIGHT AT U–BLOCK BEARING FOR ENTIRE LENGTH OF BEARING & REINF. EA. CELL W/ BAR SAME SIZE AS WALL REINFORCING. VERTICAL REINF. SHALL BE CONTINUOUS THRU LINTEL AT BEARING.

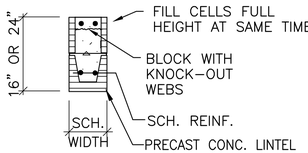

16" HIGH U–BLOCK

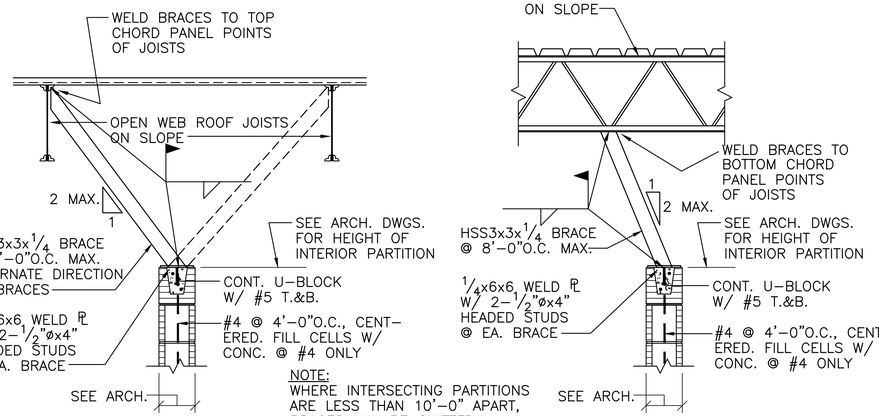

TYPICAL NON–LOAD BEARING C.M.U. PARTITION WALL ANCHORAGE DETAIL AT OPEN WEB ROOF JOISTS

SCALE: 3/4"=1'–0"

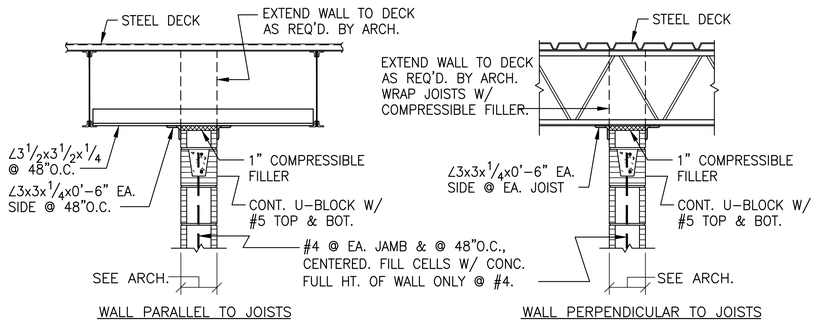

NOTE:
ANGLE BRACING SHALL BE OMITTED WHERE INTERSECTING WALLS OCCUR @ NOT MORE THAN 12'–0"O.C.

TYPICAL C.M.U. PARTITION WALL ANCHORAGE DETAIL AT OPEN WEB JOISTS

FOOTING SCHEDULE

MARK	SIZE	DEPTH	REINFORCEMENT
(A)	3'–0" x 3'–0"	12"	4–#4 EA. WAY TOP 4–#4 EA. WAY BOT.✳
(B)	4'–0" x 4'–0"	12"	5–#4 EA. WAY TOP 5–#4 EA. WAY BOT.
(C)	5'–0" x 5'–0"	12"	6–#5 EA. WAY TOP 6–#5 EA. WAY BOT.

✳ – PROVIDE 180° HOOK EACH END OF BOTTOM BARS

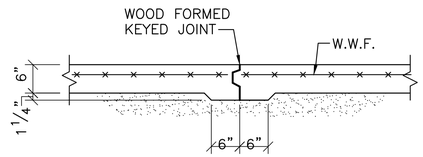

TYPICAL SLAB CONSTRUCTION JOINT DETAIL – (C.J.)

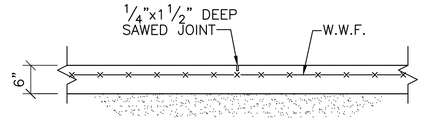

NOTE:
SAWED JOINTS (IF USED) SHALL BE CUT THE SAME DAY AS CONCRETE POUR.

TYPICAL ALTERNATE SAWED JOINT DETAIL

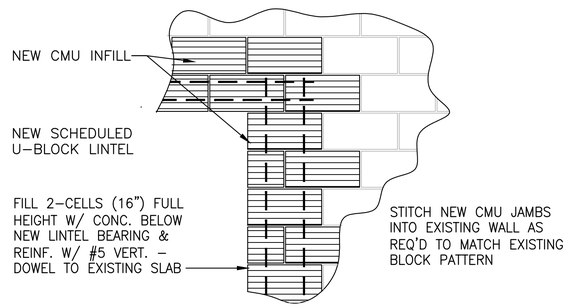

TYPICAL DETAIL OF NEW OPENING IN EXISTING MASONRY WALL

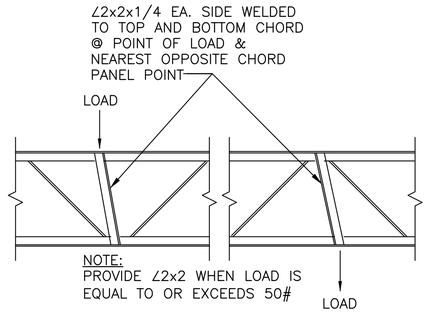

TYPICAL JOIST WHERE LOAD IS ADDED @ OTHER THAN PANEL POINT

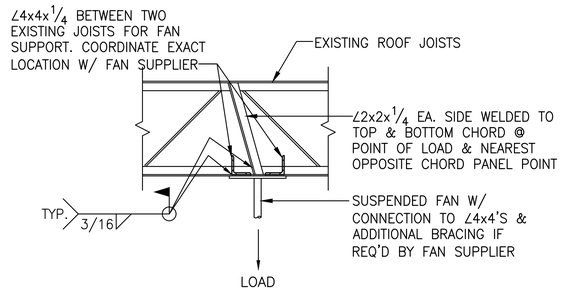

FAN SUPPORT DETAIL

GENERAL NOTES

FOUNDATION:
1. THE BEARING STRATA OF ALL FOOTINGS AND GRADE BEAMS SHALL BE INSPECTED AND APPROVED BY THE SOILS TESTING LABORATORY PRIOR TO PLACING THE REINFORCING STEEL AND CONCRETE.
2. ALL FOOTINGS SHALL BEAR ON AN UNDISTURBED SOIL STRATA OR COMPACTED FILL CAPABLE OF SUSTAINING THE LOADS.
3. FOOTINGS WERE DESIGNED FOR AN ALLOWABLE SOIL BEARING OF P = 2000 PSF.
4. ELEVATIONS SHOWN ON PLAN ARE TOP OF FOOTINGS AND ARE MINIMUM DEPTH. DIFFERENT OR UNUSUAL CONDITIONS SHALL BE REPORTED TO THE ARCHITECT AND/OR ENGINEER.
5. ALL FOOTING REINFORCEMENT SHALL BE HELD SECURELY FROM THE GROUND. CONCRETE BLOCK AND BROKEN TILE SHALL NOT BE USED. CONCRETE OR CLAY BRICK MAY BE USED.
6. PROVIDE PREFORMED EXPANSION JOINT WHERE SHOWN.
7. IN CONTINUOUS FOOTINGS PROVIDE CORNER BARS AT ALL EXTERIOR BUILDING CORNERS.

CONCRETE:
1. ALL CONCRETE SHALL HAVE A COMPRESSIVE STRENGTH AT 28 DAYS OF F'c = 3000 PSI AND A MAXIMUM WATER–CEMENT RATIO OF 0.53. ALL CONCRETE FOR EXTERIOR APPLICATIONS SHALL CONTAIN ENTRAINED AIR. SEE SPECS FOR ADDITIONAL INFORMATION.
2. REINFORCING STEEL SHALL CONFORM TO ASTM A615 GRADE 60.
3. WELDED WIRE FABRIC SHALL CONFORM TO ASTM A185.
4. UNLESS NOTED OTHERWISE PROTECTIVE COVERING OF REINFORCEMENT SHALL BE AS FOLLOWS (SEE DETAILS) : FOOTINGS AND GRADE BEAMS 3" CLEAR BOTTOM AND SIDES, 1 1/2" CLEAR TOP. CONCRETE SLABS 3/4" CLEAR. WALLS 1 1/2" CLEAR SIDES. BEAMS 1 1/2" CLEAR TO STIRRUPS. CONCRETE COLUMNS 1 1/2" CLEAR TO TIES.
5. LAP ALL CONCRETE WALL VERTICAL REINFORCING AND CONCRETE BEAM HORIZONTAL REINFORCING WITH CLASS B LAP SPLICES. LAP ALL OTHER CONTINUOUS BARS WITH CLASS A SPLICES UNLESS NOTED OTHERWISE.
6. PLACING PLANS AND DETAILS SHALL BE IN ACCORDANCE WITH THE LATEST "A.C.I. DETAILING MANUAL".
7. STEEL FABRICATOR SHALL SUBMIT SHOP DRAWINGS FOR THE ARCHITECT AND/OR ENGINEER'S REVIEW.

STRUCTURAL STEEL:
1. ALL STRUCTURAL STEEL W AND WT SHAPES SHALL CONFORM TO ASTM A992 (GRADE 50). OTHER SHAPES SHALL CONFORM TO ASTM, A36, LATEST EDITION (EXCEPT TUBE SECTIONS).
2. STRUCTURAL STEEL TUBE SECTIONS SHALL CONFORM TO ASTM A500, GRADE B, Fy = 46.0 KSI.
3. BOLTED CONNECTIONS SHALL BE MADE WITH HIGH STRENGTH BOLTS CONFORMING TO ASTM A325. USE 3/4 INCH DIAMETER MINIMUM. UNLESS NOTED OTHERWISE, ALL BOLTS SHALL BE TIGHTENED AS FULLY PRETENSIONED BEARING CONNECTIONS.
7. CONNECTIONS NOT SHOWN ON DRAWINGS SHALL BE DESIGNED BY THE FABRICATOR. WHERE POSSIBLE USE DOUBLE ANGLE CONNECTIONS. USE MAXIMUM NUMBER OF BOLTS FOR DEPTH OF BEAM WITH SINGLE ROW OF BOLTS.
8. FOR DBL–ANGLE CONNECTIONS, MIN ANGLE THICKNESS SHALL BE 5/16" FOR 3/4 INCH DIAMETER BOLTS AND 3/8" FOR 7/8 INCH DIAMETER BOLTS AND LARGER.

PRE–ENGINEERED METAL BUILDING:
1. THE COMPLETE DESIGN OF METAL BUILDING INCLUDING ALL COMPONENTS SHOWN OR NOT SHOWN ON THE DRAWINGS SHALL BE ACCOMPLISHED BY THE BUILDING MANUFACTURER.
2. THE DESIGN SHALL BE MADE BY A REGISTERED ENGINEER, REGISTERED IN THE STATE OF FLORIDA AND HE SHALL AFFIX HIS REGISTRATION NUMBER TO ALL SHOP DRAWINGS AND CALCULATIONS.
3. THE BUILDING AND ALL OF ITS COMPONENTS SHALL BE DESIGNED FOR THE FOLLOWING DEAD AND LIVE LOADS;
   a.) ACTUAL WEIGHT OF STEEL STRUCTURE.
   b.) 8 PSF DEAD (COLLATERAL) LOAD IN ADDITION TO ACTUAL WEIGHT OF STRUCTURE AND ROOFING MATERIALS.
   c.) 20 PSF ROOF LIVE LOAD.
   d.) ANY ADDITIONAL LOADS AND REACTIONS THAT ARE SHOWN ON THE DRAWINGS.
   e.) WIND LOADING AS REQUIRED BY INTERNATIONAL BUILDING CODE.
4. NO LIVE LOAD REDUCTION SHALL BE TAKEN FOR THE DESIGN OF THE RIGID FRAMES.
5. WHERE MEMBER SIZES AND GAGES ARE SHOWN THEY SHALL BE CONSIDERED A MINIMUM SIZE. THE MANUFACTURER SHALL NOT USE SMALLER SIZE OR LIGHTER GAGES, OR OMIT FRAMING WHERE INDICATED. HE SHALL USE ONLY LARGER SIZE AND HEAVIER GAGES IF HIS DESIGN INDICATES THESE ARE REQUIRED TO MEET THE LOADING CRITERIA
6. THE DEFLECTION OF GIRTS SHALL BE LIMITED TO 1/240 OF THE SPAN AND DEFLECTION OF PURLINS SHALL BE LIMITED TO 1/240 OF THE SPAN. DEFLECTION OF RIGID FRAMES SHALL BE LIMITED TO 1/240 OF THE SPAN. DEFLECTIONS SHALL BE BASED ON TOTAL LOAD (DEAD PLUS LIVE LOADS). TOTAL RIGID FRAME DRIFT SHALL BE LIMITED TO H/240, WHERE H IS EQUAL TO THE EAVE HEIGHT.
7. COLUMN BASES SHALL BE DESIGNED AS PINNED CONNECTIONS. MOMENTS AT COLUMN BASE PLATES ARE NOT ACCEPTABLE.
8. LOCATE PORTAL FRAMES ONLY WHERE INDICATED ON PLAN. PORTAL FRAME COLUMNS SHALL BE NESTED TIGHT TO WEB OF RIGID FRAME COLUMN.

CODES:
ALL PARTS SHALL BE FURNISHED AND ERECTED ACCORDING TO THE APPLICABLE CODES AND SPECIFICATIONS OF THE FOLLOWING:
AMERICAN CONCRETE INSTITUTE (ACI)
AMERICAN INSTITUTE OF STEEL CONSTRUCTION (AISC)
AMERICAN WELDING SOCIETY (AWS)
OSHA STEEL ERECTION STANDARD (OSHA)
INTERNATIONAL BUILDING CODE (IBC 2012) (ICC)

DESIGN LIVE LOADS:
ROOF.....20 PSF.
RISK CATEGORY (PER FBC 2014/ASCE 7–10).....II
WIND.....INTERNATIONAL BUILDING CODE (PER ASCE 7–10)
ULTIMATE DESIGN WIND SPEED (Vult).....115 MPH
NOMINAL DESIGN WIND SPEED (Vasd).....90 MPH
WIND EXPOSURE.....C
INTERNAL PRESSURE COEFFICIENTS.....+/–0.18
SEISMIC....INTERNATIONAL BUILDING CODE (PER ASCE 7–10)
SEISMIC IMPORTANCE FACTOR.....Ie=1.0
MAPPED SPECTRAL ACCELERATION (SHORT–TERM)....Ss=0.239g
MAPPED SPECTRAL ACCELERATION (1–SECOND).....S1=0.102g
SITE CLASS.....D
SHORT–PERIOD SPECTRAL RESPONSE ACCEL.....Sds=0.255g
1–SECOND SPECTRAL RESPONSE ACCEL.....Sd1=0.163g
SEISMIC DESIGN CATEGORY.....C
SEISMIC FORCE–RESISTING SYSTEM.....STEEL SYSTEM NOT SPECIFICALLY DETAILED FOR SEISMIC RESESTANCE
DESIGN BASE SHEAR (ULTIMATE).....2.3k
SEISMIC RESPONSE COEFFICIENT.....Cs=0.085
RESPONSE MODIFICATION FACTOR.....R=3
ANALYSIS PROCEDURE.....ASCE 7 (SECT 12.8)
SNOW.....INTERNATIONAL BUILDING CODE
GROUND SNOW LOAD.....Pg=5 PSF

SEAY SEAY & LITCHFIELD
MONTGOMERY | DOTHAN
WWW.SSLARCH.COM
(334) 263–5162

Owner:
The Armory Commission of Alabama
1720 Cong WL Dickinson Drive
Montgomery, AL 36109

SS&L Job Number
14057

ARNG Job Number
AC–22–B–0004–S

Date
JANUARY 2022

Drawn By
RAS

Checked By
JWD

Revised

Project Title
NORTHPORT
FMS #9 RENOVATIONS
NORTHPORT, AL

Sheet Title
GENERAL NOTES, SCHEDULES, AND TYPICAL DETAILS

Sheet Number
S0.1

ALABAMA REGISTERED No. 30036 PROFESSIONAL ENGINEER JACK W. DANIELS
1-10-22

FILE NAME

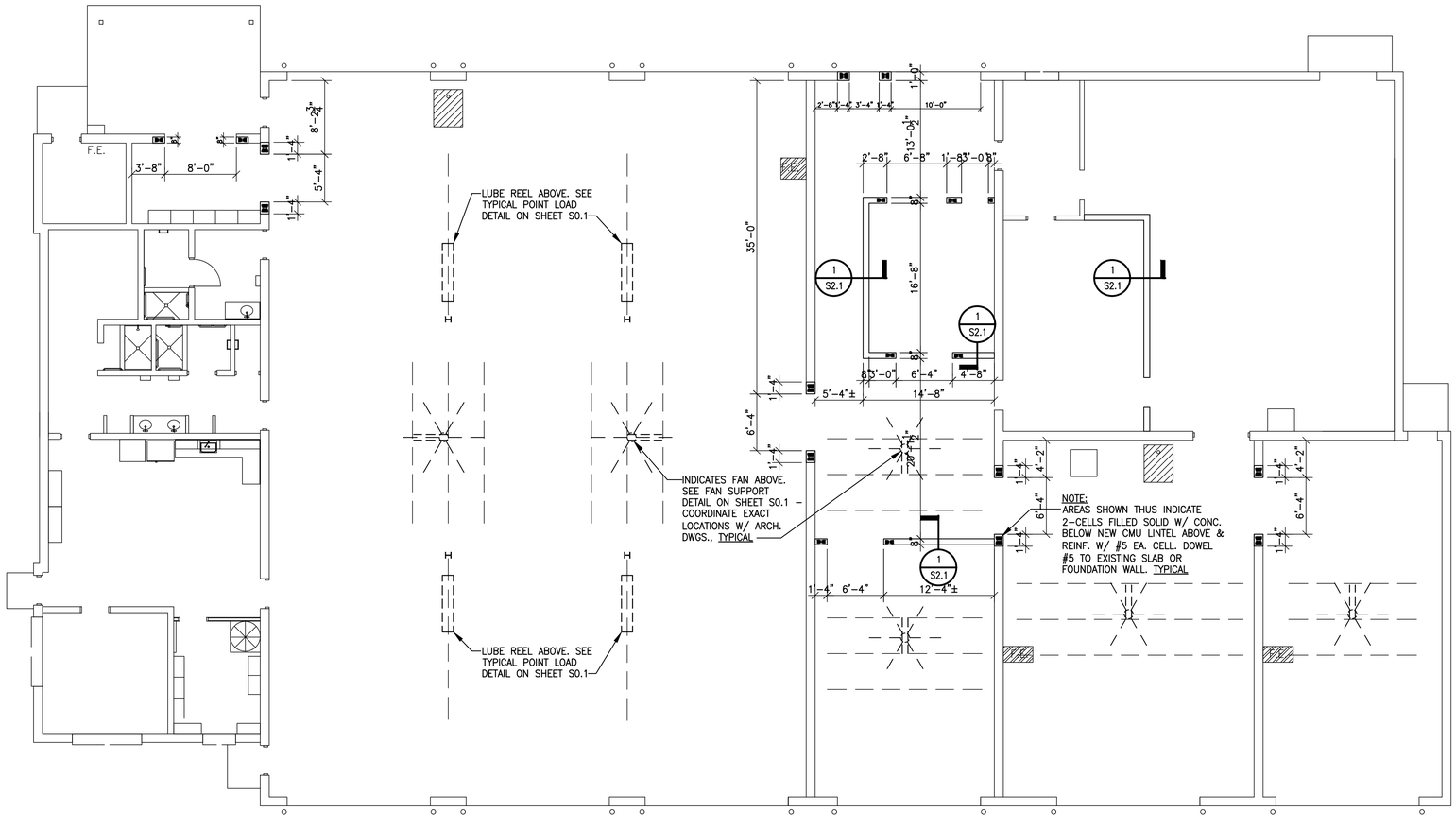

FOUNDATION PLAN – EXISTING MAINTENANCE SHOP

SCALE: 1/4"=1'-0"

FILE NAME

SEAY SEAY & LITCHFIELD

MONTGOMERY | DOTHAN
WWW.SSLARCH.COM
(334) 263-5162

Owner:
The Armory Commission of Alabama
1720 Cong WL Dickinson Drive
Montgomery, AL 36109

SS&L Job Number
14057

ARNG Job Number
AC-22-B-0004-S

Date
JANUARY 2022

Drawn By
RAS

Checked By
JWD

Revised

Project Title

NORTHPORT
FMS #9 RENOVATIONS
NORTHPORT, AL

Sheet Title

FOUNDATION PLAN
EXISTING MAINTENANCE SHOP

Sheet Number

S1.1

ALABAMA REGISTERED No. 30036 PROFESSIONAL ENGINEER NICK W. DANIELS
1-10-22

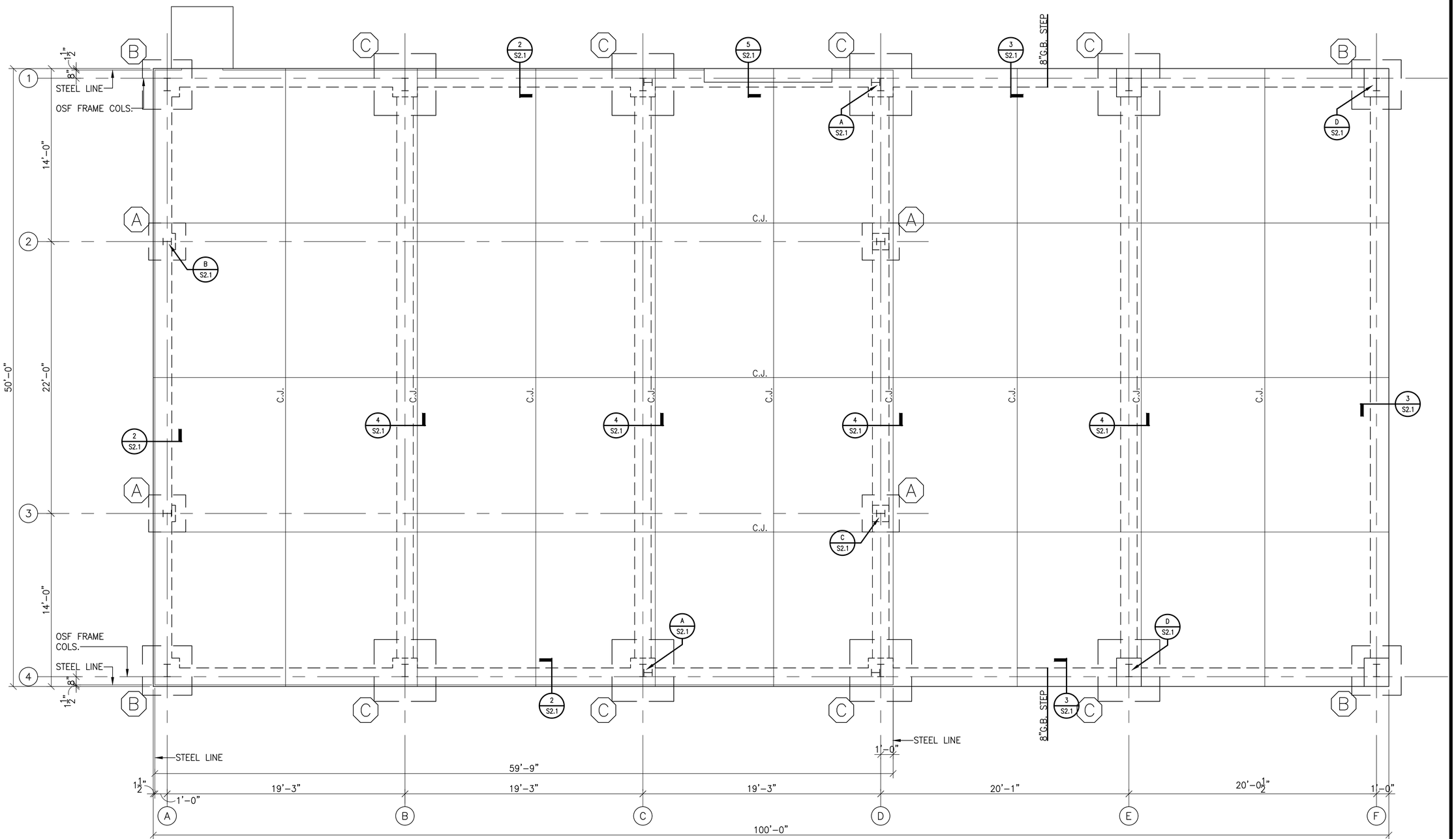

FLOOR CONSTRUCTION

6" CONCRETE SLAB W/ 6x6–W2.9x W2.9 W.W.F. OVER VAPOR BARRIER OVER 4" POROUS FILL.
FINISH FL. ELEV. = 0'–0" (ASSUMED)

FOUNDATION PLAN – STORAGE BUILDING

SCALE: 1/4"=1'–0"

NOTE:
TOP OF ALL COLUMN FOOTINGS SHALL BE (-2'-0") BELOW FINISH FLOOR. UNLESS NOTED OTHERWISE ON PLAN.

FILE NAME

SEAY SEAY & LITCHFIELD
MONTGOMERY | DOTHAN
WWW.SSLARCH.COM
(334) 263-5162

Owner:
The Armory Commission of Alabama
1720 Cong WL Dickinson Drive
Montgomery, AL 36109

SS&L Job Number
14057

ARNG Job Number
AC-22-B-0004-S

Date
JANUARY 2022

Drawn By
RAS

Checked By
JWD

Revised

Project Title

NORTHPORT
FMS #9 RENOVATIONS
NORTHPORT, AL

Sheet Title

FOUNDATION PLAN
STORAGE BUILDING

Sheet Number
S1.2

ALABAMA REGISTERED No. 30036 PROFESSIONAL ENGINEER JACK W. DANIELS
1-10-22

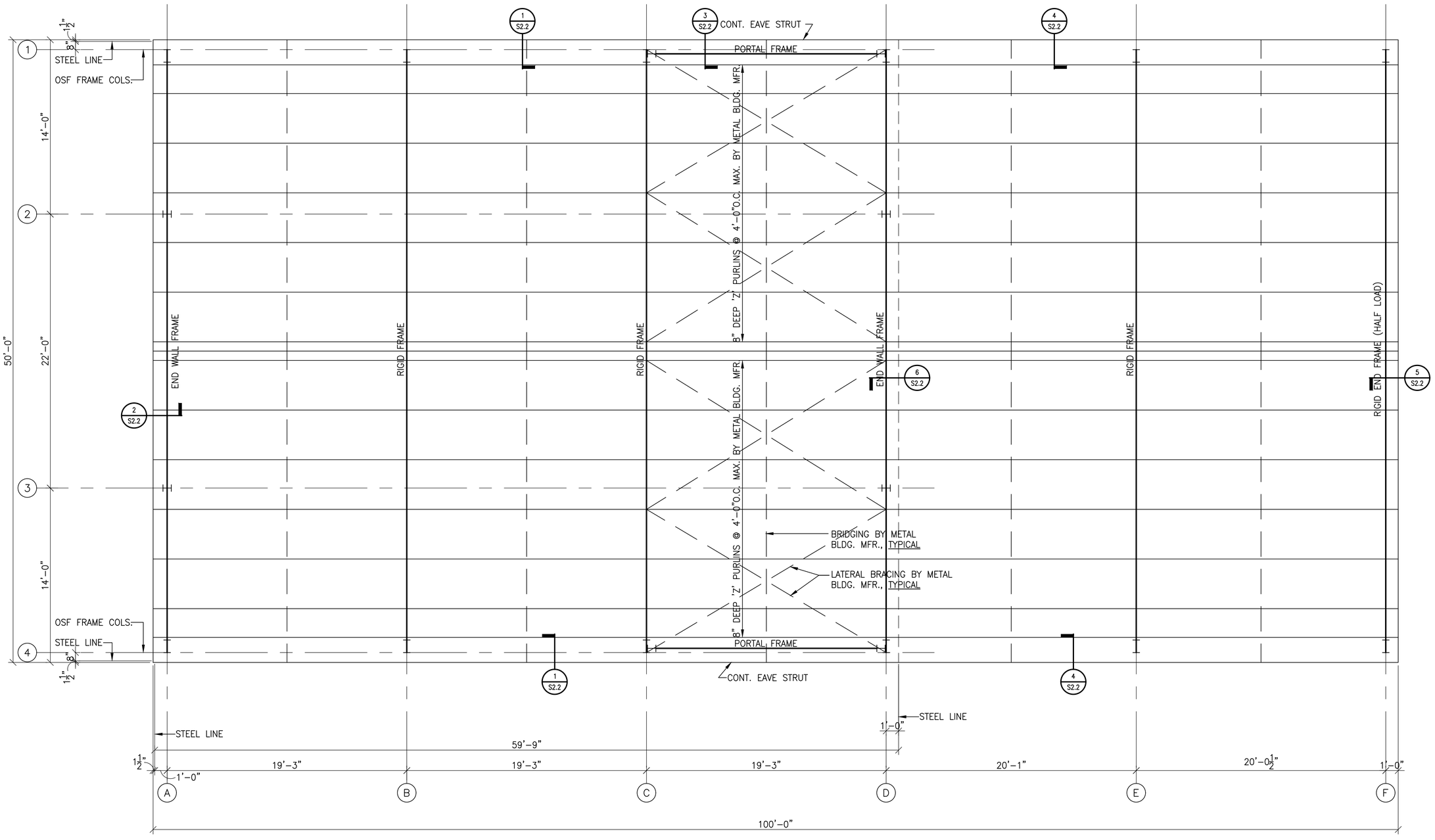

ROOF FRAMING PLAN – STORAGE BUILDING

SCALE: 1/4"=1'-0"

FILE NAME

SEAY SEAY & LITCHFIELD

MONTGOMERY | DOTHAN
WWW.SSLARCH.COM
(334) 263-5162

Owner:
The Armory Commission of Alabama
1720 Cong WL Dickinson Drive
Montgomery, AL 36109

SS&L Job Number
14057

ARNG Job Number
AC-22-B-0004-S

Date
JANUARY 2022

Drawn By
RAS

Checked By
JWD

Revised

Project Title

NORTHPORT
FMS #9 RENOVATIONS
NORTHPORT, AL

Sheet Title

ROOF FRAMING PLAN
STORAGE BUILDING

Sheet Number

S1.3

ALABAMA REGISTERED No. 30036 PROFESSIONAL ENGINEER RICK W. DANIEL
1-10-22

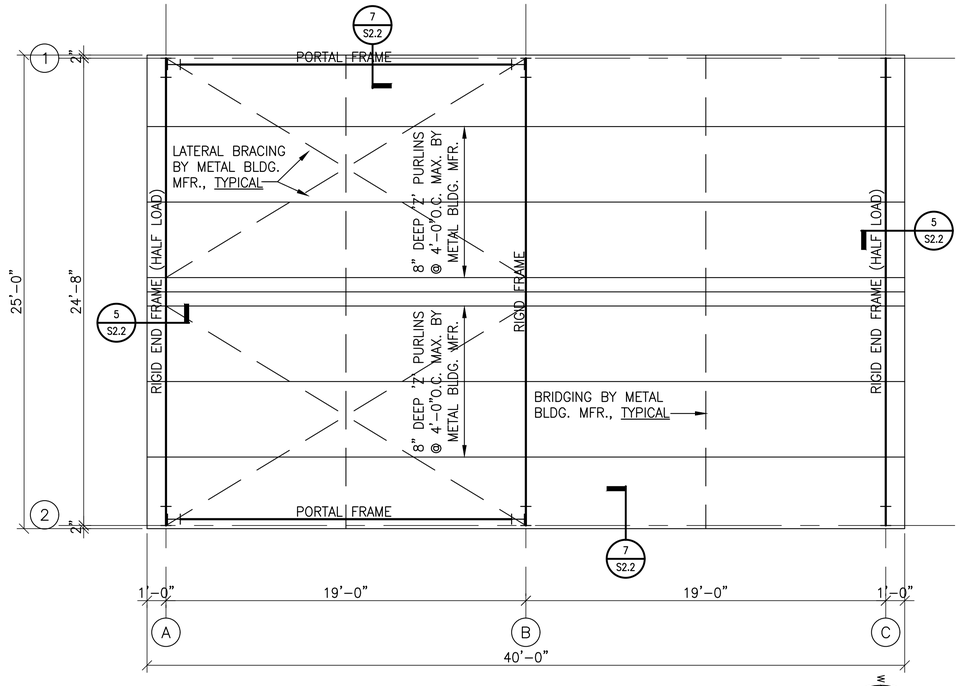

ROOF FRAMING PLAN - NEW WASH RACK

SCALE: 1/4"=1'-0"

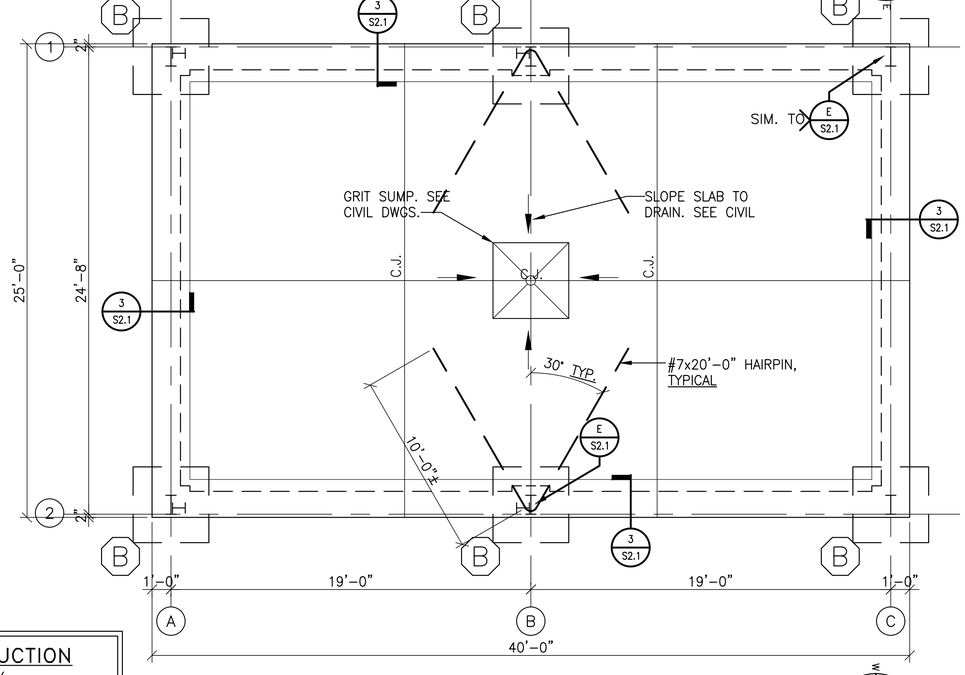

FOUNDATION PLAN - NEW WASH RACK

SCALE: 1/4"=1'-0"

NOTE:
TOP OF ALL COLUMN FOOTINGS SHALL BE (-2'-0") BELOW FINISH FLOOR. UNLESS NOTED OTHERWISE ON PLAN.

FLOOR CONSTRUCTION
6" CONCRETE SLAB W/ 6x6-W2.9xW2.9 W.W.F. OVER VAPOR BARRIER OVER 4" POROUS FILL.
FINISH FL. ELEV. = 0'-0" (ASSUMED)

FILE NAME

SEAY SEAY & LITCHFIELD
MONTGOMERY | DOTHAN
WWW.SSLARCH.COM
(334) 263-5162

Owner:
The Armory Commission of Alabama
1720 Cong WL Dickinson Drive
Montgomery, AL 36109

SS&L Job Number
14057

ARNG Job Number
AC-22-B-0004-S

Date
JANUARY 2022

Drawn By
RAS

Checked By
JWD

Revised

Project Title
NORTHPORT
FMS #9 RENOVATIONS
NORTHPORT, AL

Sheet Title
ROOF FRAMING PLAN
NEW WASH RACK

Sheet Number
S1.4

ALABAMA REGISTERED No. 30036 PROFESSIONAL ENGINEER JACK W. DANIELS
1-10-22

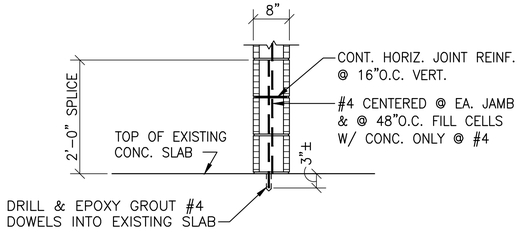

SECTION 3/4"=1'-0" (1 S2.1)

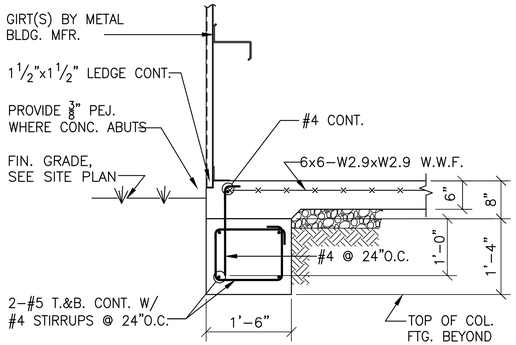

SECTION 3/4"=1'-0" (2 S2.1)

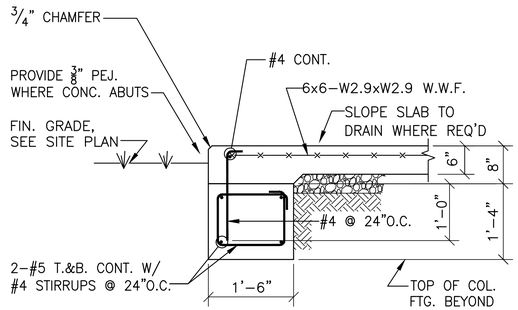

SECTION 3/4"=1'-0" (3 S2.1)

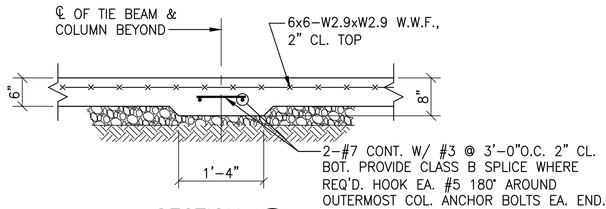

SECTION 3/4"=1'-0" (4 S2.1)

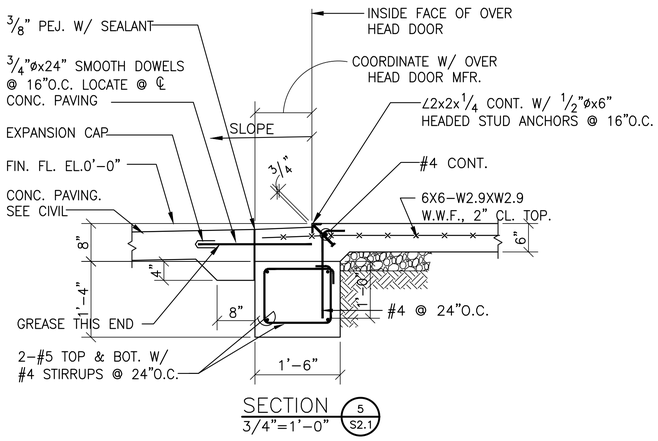

SECTION 3/4"=1'-0" (5 S2.1)

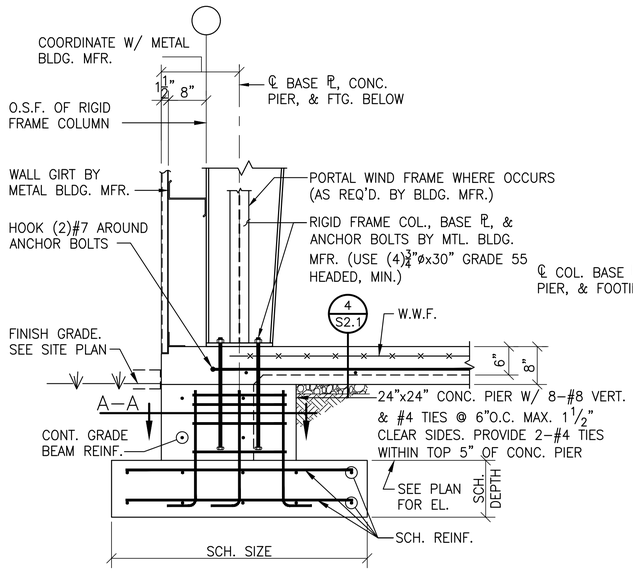

DETAIL 3/4"=1'-0" (A S2.1)

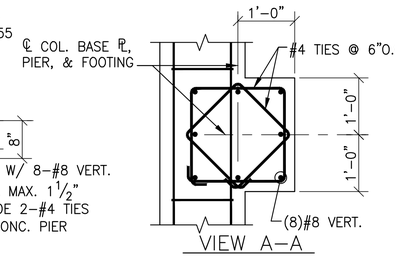

VIEW A-A

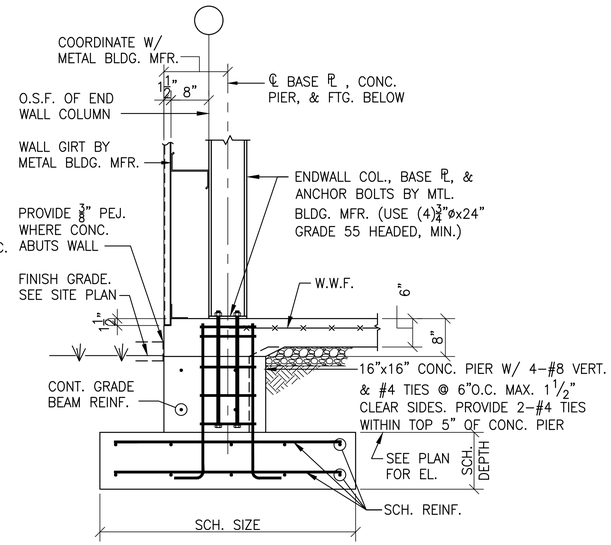

DETAIL 3/4"=1'-0" (B S2.1)

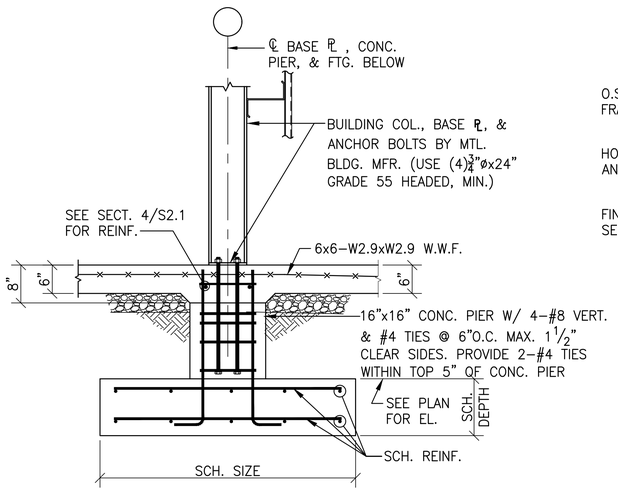

DETAIL 3/4"=1'-0" (C S2.1)

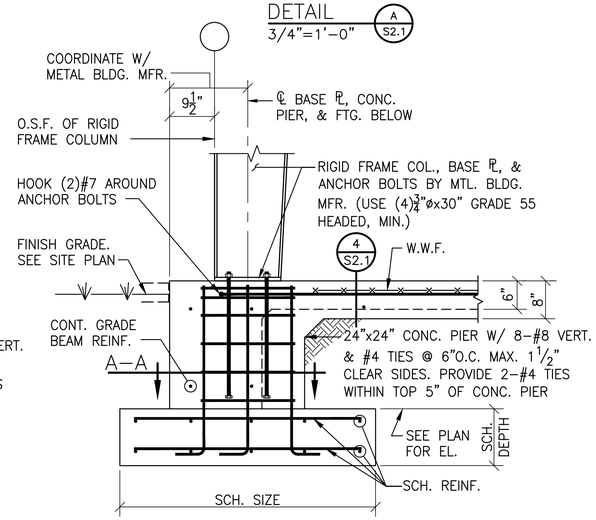

DETAIL 3/4"=1'-0" (D S2.1)

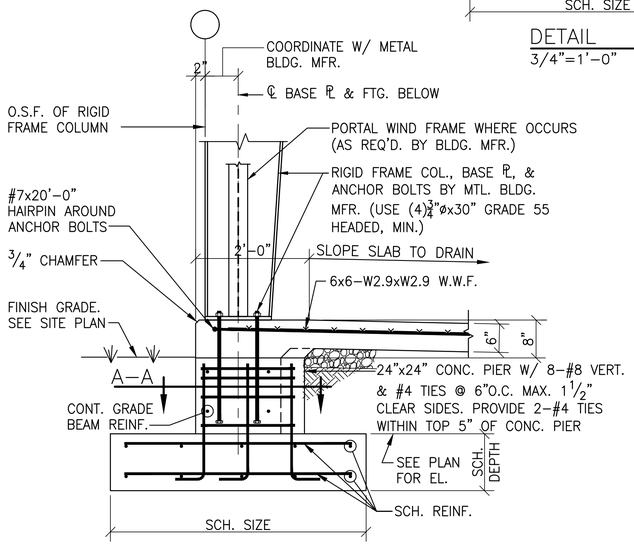

DETAIL 3/4"=1'-0" (E S2.1)

FILE NAME

SEAY SEAY & LITCHFIELD

MONTGOMERY | DOTHAN
WWW.SSLARCH.COM
(334) 263-5162

Owner:
The Armory Commission of Alabama
1720 Cong WL Dickinson Drive
Montgomery, AL 36109

SS&L Job Number
14057

ARNG Job Number
AC-22-B-0004-S

Date
JANUARY 2022

Drawn By
RAS

Checked By
JWD

Revised

Project Title

NORTHPORT
FMS #9 RENOVATIONS
NORTHPORT, AL

Sheet Title

SECTIONS AND DETAILS

Sheet Number

S2.1

ALABAMA REGISTERED No. 30036 PROFESSIONAL ENGINEER JACK W. DANIELS 1-10-22

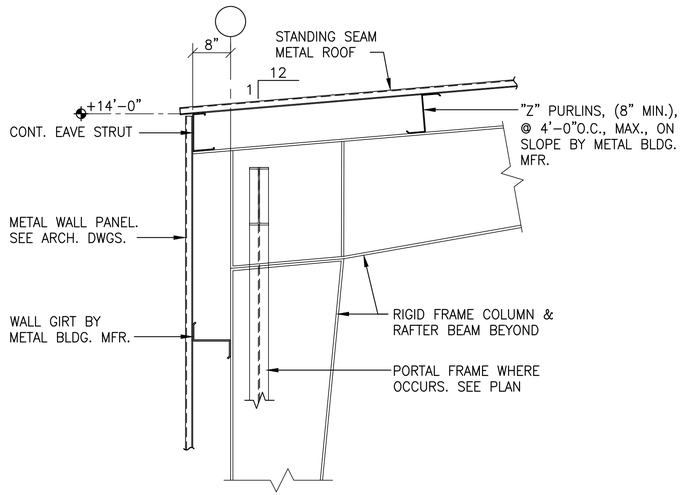

SECTION 1 S2.2
3/4"=1'-0"

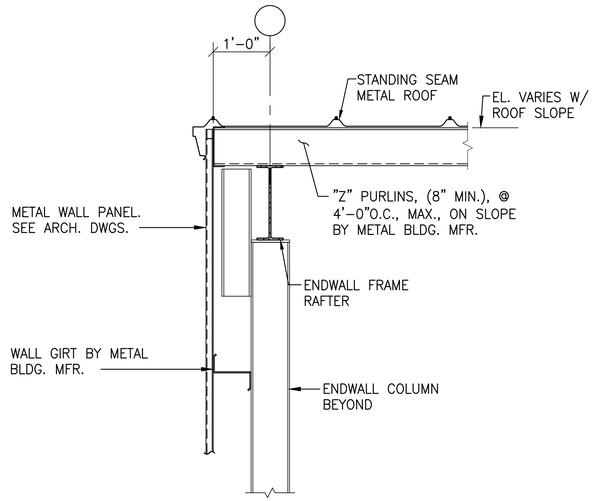

SECTION 2 S2.2
3/4"=1'-0"

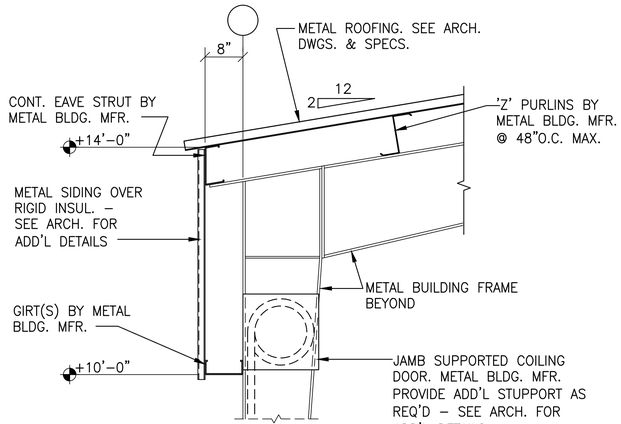

SECTION 3 S2.2
3/4"=1'-0"

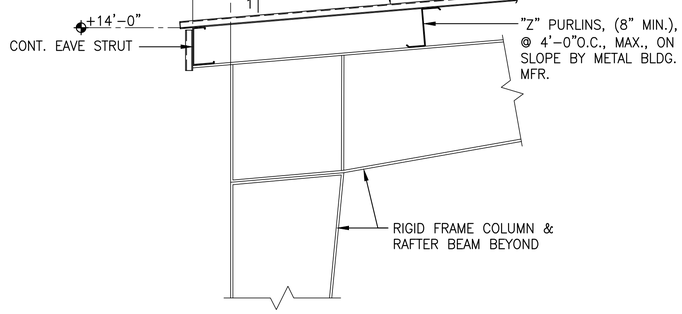

SECTION 4 S2.2
3/4"=1'-0"

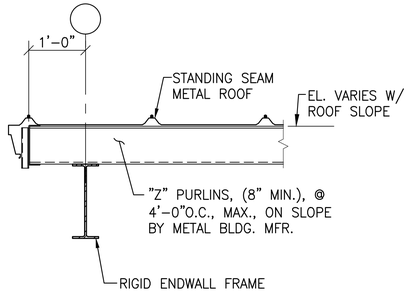

SECTION 5 S2.2
3/4"=1'-0"

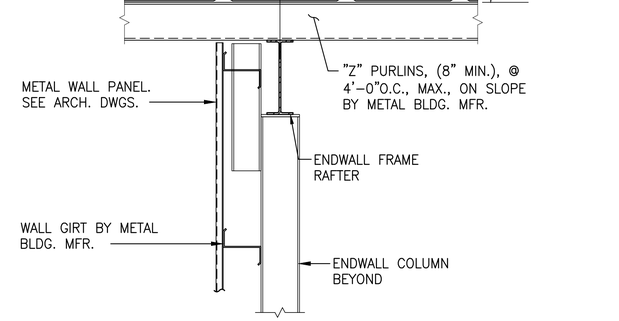

SECTION 6 S2.2
3/4"=1'-0"

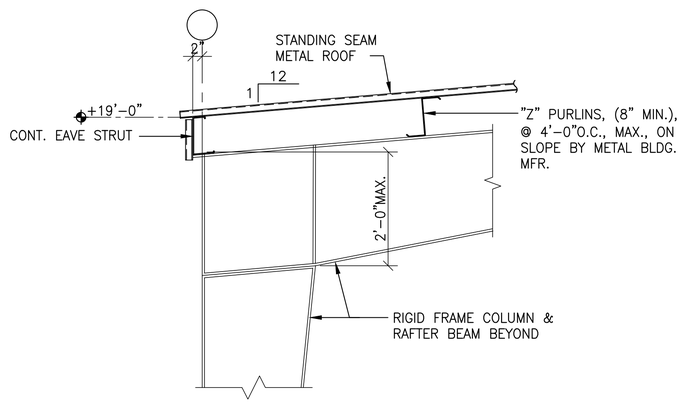

SECTION 7 S2.2
3/4"=1'-0"

FILE NAME

SEAY SEAY & LITCHFIELD
MONTGOMERY | DOTHAN
WWW.SSLARCH.COM
(334) 263-5162

Owner:
The Armory Commission of Alabama
1720 Cong WL Dickinson Drive
Montgomery, AL 36109

SS&L Job Number
14057

ARNG Job Number
AC-22-B-0004-S

Date
JANUARY 2022

Drawn By
RAS

Checked By
JWD

Revised

Project Title
NORTHPORT
FMS #9 RENOVATIONS
NORTHPORT, AL

Sheet Title
SECTIONS AND DETAILS

Sheet Number
S2.2



GENERAL CONSTRUCTION NOTES:

1.) GENERAL NOTES APPLY TO THE ENTIRE PROJECT. SPECIFIC NOTES (DESIGNATED ⇨) APPLY TO ISOLATED WORK AREAS AND ARE FOR THE CONVENIENCE OF THE CONTRACTOR. HOWEVER, ALL ISOLATED WORK AREAS ARE NOT NOTED. SHOULD A CONDITION OCCUR THAT IS NOT SPECIFICALLY NOTED, THE CONTRACTOR SHALL PROCEED WITH WORK PER GENERAL NOTES OR A SPECIFIC WORK NOTE(S) USED IN OTHER SIMILAR CONDITIONS, WHICHEVER IS MORE STRINGENT, PER APPROVAL OF ARCHITECT VIA OWNER.

2.) NOTIFY ARCHITECT IMMEDIATELY IF THERE ARE ANY DISCREPANCIES WITH TAGGED DETAILS, ENLARGED PLANS.

3.) DEMOLITION WORK, AS WELL AS NEW CONSTRUCTION, WILL BE PERFORMED THROUGHOUT THE BUILDING. THE GENERAL CONTRACTOR TO VISIT SITE AND TO BECOME TOTALLY FAMILIAR WITH EXTENT OF WORK REQUIRED PRIOR TO BEGINNING ANY DEMOLITION WORK.

4.) ALL OSHA AND APPLICABLE STANDARDS UPHELD TO ASSURE SAFETY OF ALL PERSONS ON SITE DURING ENTIRE COURSE OF CONSTRUCTION.

5.) DIMENSIONS OF EXISTING STRUCTURES ARE ONLY FOR THE CONVENIENCE OF THE CONTRACTOR. CONTRACTOR SHALL VERIFY ALL EXISTING CONDITIONS. LOCATION OF WALLS SHALL BE AS SHOWN ON PLANS RELATIVE TO EXISTING CONDITIONS.

6.) ALL EXTERIOR EXISTING DOORS AND FRAMES TO BE RE-PAINTED. FOR HOLLOW METAL DOORS TO FRAMES, REMOVE ALL RUST, SAND SMOOTH TO RE-PAINT.

7.) WHERE NEW WALLS ARE SHOWN, WALLS SHALL RUN FROM FLOOR TO DECK ABOVE, CLOSE ALL GAPS. ALL NEW CMU WALLS SHALL EXTEND AND BE COMPLETELY SEALED TO UNDERSIDE OF ROOF DECK.

8.) FOR PATCHING OF FLOOR SLAB PENETRATIONS LEFT AS A RESULT OF BUT NOT LIMITED TO WALLS, DOOR, FLOOR, WINDOWS, CABINETRY, ETC. REMOVE PORTIONS AS REQUIRED FOR SPECIFIED WORK, NOT ALL DUCT/PIPE/CONDUIT PENETRATIONS ARE SHOWN, VERIFY WITH MECHANICAL, PLUMBING, ELECTRICAL, AND ALL OTHER TRADES FOR OTHER REQUIRED PENETRATIONS. COORDINATE TO AVOID STRUCTURAL BEAMS.

9.) REMOVE ALL CEILING GRID AND TILE AS REQUIRED.

10.) WHERE NEW CONSTRUCTION 'TIES INTO' EXISTING CONSTRUCTION, THE GENERAL CONTRACTOR SHALL MAKE A TRANSITION THAT APPEARS SEAMLESS. THE FLOOR AND THRESHOLD, WHERE THE EXISTING CONCRETE SLAB MEETS THE NEW CONCRETE SLAB, SHALL BE SMOOTH AND LEVEL.

11.) CONTRACTOR IS RESPONSIBLE FOR RELOCATING/PROTECTING/STORING REMAINING FURNITURE DURING PROJECT DURATION AND LOCATE/INSTALL BACK IN PLACE AT OWNER'S GUIDANCE AT PROJECT COMPLETION.

12.) SEE SPECIFICATIONS SECTION 08 7100 FOR DOOR HARDWARE REPLACEMENT / NEW INSTALLATION.

13.) ALL EXTERIOR / SITE AREAS DISTURBED BY CONSTRUCTION ACTIVITIES MUST BE RE-ESTABLISHED TO LIKE NEW CONDITIONS. (TIRE RUTS FILLED, SOD PLACED, DAMAGED SIDEWALKS REPAIRED OR REPLACED, ETC.) CONTRACTOR SHALL PHOTO AND VIDEO DOCUMENT EXISTING CONDITIONS WITH OWNER PRIOR TO BEGINNING CONSTRUCTION ACTIVITIES.

14.) WHERE CMU DEMOLITION HAS OCCURRED, THE CONTRACTOR IS TO INSURE WHERE NEW CMU IS INSTALLED AT DEMOLISHED AREAS, THE CMU SHOULD BE BLENDED TO MATCH EXISTING AND ADJACENT CMU. CORNER CONDITIONS SHOULD BE FINISHED. AREAS WHERE INTERSECTING WALLS ARE DEMOLISHED, THE REMAINING WALL SHALL BE PATCHED / INFILLED WITH CMU FOR A SMOOTH FINISH - MATCH EXISTING CMU SIZES.

15.) CONTRACTOR TO VERIFY ALL LOAD BEARING CONDITIONS AND PROVIDE SHORING AS REQUIRED IN ALL AFFECTED AREAS PRIOR TO AND DURING DEMOLITION AND/OR CONSTRUCTION. REPORT ANY CONDITIONS THAT APPEAR TO BE DIFFERENT TO THE ARCHITECT BEFORE REMOVING PARTITION.

16.) PROTECT EXISTING DOORS, WALL MOUNTED OWNER EQUIPMENT, HVAC UNITS AND LIGHT FIXTURES TO BE REUSED.

17.) CONTRACTOR TO INSURE ALL PENETRATIONS THROUGH FIRE RATED WALLS ARE SEALED PER SPECIFICATIONS SECTION 07 8401 FIRESTOPPING.

18.) CONTRACTOR TO REPAINT ALL INTERIOR AND EXTERIOR WALLS, INCLUDING SHOP CEILING. ALL EXTERIOR WALLS TO RECEIVE NEW SEALANT - COLORS TO BE SELECTED BY OWNER AND ARCHITECT.

19.) CONTRACTOR TO PAINT ALL EXISTING BOLLARDS AND NEW BOLLARDS - COLOR TO BE SELECTED BY OWNER AND ARCHITECT.

20.) CONTRACTOR TO REPAINT ALL DOORS AND FRAMES. FINAL COLORS TO BE SELECTED BY OWNER AND ARCHITECT.

21.) AT ALL FIRE EXTINGUISHER LOCATIONS, CONTRACTOR SHALL PROVIDE WALL HOOKS TO SUPPORT NEW OWNER FURNISHED FIRE EXTINGUISHERS. PAINT FLOOR AS SHOWN IN DRAWINGS AT ALL FIRE EXTINGUISHER LOCATIONS.

GENERAL DEMOLITION NOTES:

1.) DOCUMENTATION CONTAINED IN THESE CONSTRUCTION DOCUMENTS OF EXISTING CONDITIONS MAY NOT BE ENTIRELY ACCURATE. CONTRACTOR IS TO TAKE THE INITIATIVE TO VISIT THE SITE PRIOR TO AND DURING THE PRE-BID PERIOD TO VERIFY ACTUAL CONDITIONS, THEREFORE RENDERING THE CONTRACTOR RESPONSIBLE FOR AN ACCURATE REPRESENTATION OF THE EXISTING CONDITIONS.

2.) GENERAL DEMOLITION NOTES APPLY TO THE ENTIRE PROJECT. SPECIFIC NOTES (DESIGNATED ⇨) APPLY TO ISOLATED WORK AREAS AND ARE FOR THE CONVENIENCE OF THE CONTRACTOR. HOWEVER, ALL ISOLATED WORK AREAS ARE NOT NOTED. SHOULD A CONDITION OCCUR THAT IS NOT SPECIFICALLY NOTED, THE CONTRACTOR SHALL PROCEED WITH WORK PER GENERAL DEMOLITION NOTES OR A SPECIFIC WORK NOTE(S) USED IN OTHER SIMILAR CONDITIONS, WHICHEVER IS MORE STRINGENT, PER APPROVAL OF ARCHITECT VIA OWNER.

3.) CONTRACTOR SHALL BE RESPONSIBLE FOR & MAKE REPARATIONS TO ANY & ALL DAMAGE TO "EXISTING TO REMAIN" EQUIPMENT, FIXTURES, WALLS, FLOORS, CEILINGS, DOORS, WINDOWS, HARDWARE, TRIM, UNALTERED FINISHES OR ANY OTHER BUILDING ELEMENTS INTERIOR OR EXTERIOR THAT MAY OCCUR DURING THE DEMOLITION AND/OR CONSTRUCTION PHASES. ALL REPARATIONS SHALL BE MADE PRIOR TO SUBSTANTIAL COMPLETION.

4.) DOTTED LINE GENERALLY INDICATES EXISTING AREAS TO BE REMOVED, INCLUDING BUT NOT LIMITED TO WALLS, DOORS, FLOOR COVERING, CEILINGS, ETC.. PROVIDE TEMPORARY SHORING AS REQUIRED AT ALL LOAD BEARING CONDITIONS.

5.) THE BUILDING WILL CONTINUE TO BE OCCUPIED DURING CONSTRUCTION. ANY AND ALL HEAVY NOISE WILL NEED TO BE COORDINATED WITH F.O.C.. SEE SPECIFICATIONS.

6.) CONTRACTOR TO VISIT SITE AND BECOME TOTALLY FAMILIAR WITH EXTENT OF WORK REQUIRED. CONTRACTOR SHALL INSPECT EXTENT OF DEMOLITION.

7.) REMOVAL OF ALL ENCUMBRANCES INCLUDING BUT NOT LIMITED TO DUCTS, PIPING, WIRING, ETCETERAS SHALL BE DONE BY THE CONTRACTOR TO ACHIEVE PLANS AS SHOWN EVEN IF NOT SHOWN ON DEMOLITION PLANS.

8.) REMOVE ALL MISCELLANEOUS HARDWARE, PANELING, CLIPS, FASTENERS, WIRE, CONDUIT, PIPES, ETCETERAS FROM ANY AND ALL SURFACES TO RECEIVE A NEW FINISH. PATCH SUBSTRATES BY FILLING, GRINDING AND SANDING SMOOTH WITH ACCEPTABLE CONSTRUCTION INDUSTRY AND CODE COMPLIANT MATERIALS. PREPARE SURFACE FOR ACCEPTANCE OF MANUFACTURER SPECIFIED FINISH AND SURFACE TREATMENT. INSTALLATION OF FINISH INDICATES ACCEPTANCE OF SUBSTRATE BY APPLICATOR. WHERE NO NEW FINISHES OCCUR, PATCH EXISTING MATERIALS WITH MATCHING MATERIALS SO THAT PATCH WORK IS NOT VISIBLE.

9.) PATCH ALL LOCATIONS REQUIRED BY ELECTRICAL AND MECHANICAL DEMOLITION. MATCH ADJACENT CONDITIONS.

10.) REFER ALSO TO SELECTED DEMOLITION, SUMMARY OF WORK, ADDITIONAL INSTRUCTIONS TO BIDDERS, AND OTHER SPECIFICATION SECTIONS REQUIRED.

11.) CONTRACTOR TO REMOVE EXISTING SEALANT AND BACKER ROD AT ALL EXTERIOR CONTROL JOINT LOCATIONS. PROVIDE NEW SEALANT AND BACKER ROD AT EXTERIOR CONTROL JOINT LOCATIONS, REFER TO SPECIFICATIONS SECTION 07 9005.

SPECIFIC DEMOLITION NOTES:

SPECIFIC NOTES APPLY TO ISOLATED WORK AREAS AND ARE FOR THE CONVENIENCE OF THE CONTRACTOR. HOWEVER, ALL WORK AREAS ARE NOT NOTED. SHOULD A CONDITION OCCUR THAT IS NOT SPECIFICALLY NOTED, THE CONTRACTOR SHALL PROCEED WITH WORK PER GENERAL NOTES OR A SPECIFIC WORK NOTE USED IN OTHER SIMILAR CONDITIONS, AS APPROVED BY ARCHITECT.

1 DEMOLISH EXISTING CABINETRY/COUNTERTOP AND PREPARE TO INSTALL NEW CABINETRY SHOWN ON A6.1 & A6.2

2 REMOVE EXISTING HVAC UNIT IN CONCRETE MASONRY WALL AND PREPARE TO INFILL.

3 REMOVE EXISTING WINDOW AND PREPARE TO RECEIVE NEW ALUMINUM STOREFRONT WINDOW.

4 REMOVE PORTION OF EXISTING CMU WALL AND PREPARE TO INSTALL NEW HOLLOW METAL FRAME AND NEW DOOR. COORDINATE WITH STRUCTURAL. REMOVE AND REINSTALL EXISTING LIGHTING FIXTURES, EXIT LIGHTS, AND CONDUITS AS REQUIRED TO INSTALL NEW FRAME AND DOOR.

5 REMOVE EXISTING OVERHEAD ROLLING DOORS AND PREPARE TO RECEIVE NEW OVERHEAD ROLLING DOOR.

6 OWNER TO REMOVE EXISTING FURNITURE AND CABINETRY.

7 CONTRACTOR TO REMOVE EXISTING CANOPY AND PREPARE TO INSTALL NEW ALUMINUM CANOPY. PATCH / REPAIR EXISTING CMU WHERE CANOPY FASTENERS WERE REMOVED.

8 REMOVE EXISTING INFILL PANEL, BOTH INTERIOR AND EXTERIOR, AND PREPARE FOR CMU INFILL.

9 REMOVE EXISTING DOOR AND FRAME. PREPARE TO INSTALL NEW DOOR AND HOLLOW METAL FRAME.

10 REMOVE EXISTING FLOOR FINISH (VCT AND ADHESIVE) AND PREPARE TO RECEIVE NEW FLOOR FINISH AS SHOWN ON A3.1 FINISH SCHEDULE AND AS SPECIFIED.

11 REMOVE EXISTING JAMBS AND LINTELS AND PREPARE TO RECEIVE NEW JAMBS AND LINTELS.

12 REMOVE EXISTING SINK AND PREPARE FOR NEW SINK INSTALLATION.

13 REMOVE EXISTING COILING COUNTER DOOR AND ADDITIONAL CMU. PREPARE TO INSTALL NEW DOOR AND HOLLOW METAL FRAME.

14 CONTRACTOR TO VERIFY WORKING EXISTING PART WASHERS PRIOR TO MOVEMENT FOR CONSTRUCTION WORK IN THIS AREA. CONTRACTOR IS RESPONSIBLE FOR INSTALLING PART WASHERS BACK IN ORIGINAL LOCATIONS AND VERIFY EQUIPMENT IS WORKING AT THE END OF THE PROJECT.

15 CONTRACTOR SHALL REMOVE EXISTING EXTERIOR CANOPY, COLUMNS, AND FOOTINGS IN THEIR ENTIRETY.

SPECIFIC NOTES:

SPECIFIC NOTES APPLY TO ISOLATED WORK AREAS AND ARE FOR THE CONVENIENCE OF THE CONTRACTOR. HOWEVER, ALL WORK AREAS ARE NOT NOTED. SHOULD A CONDITION OCCUR THAT IS NOT SPECIFICALLY NOTED, THE CONTRACTOR SHALL PROCEED WITH WORK PER GENERAL NOTES OR A SPECIFIC WORK NOTE USED IN OTHER SIMILAR CONDITIONS, AS APPROVED BY ARCHITECT.

1 INSTALL NEW CABINETRY AS SHOWN ON DRAWING SHEET A6.1 AND A6.2 - CONTRACTOR TO PAINT ENTIRE WALLS (CORNER TO CORNER, AND FLOOR TO CEILING) AFFECTED BY DEMOLITION AND NEW CONSTRUCTION.

2 INFILL CONCRETE MASONRY WALL UNITS MATCHING EXISTING WIDTH OF WALL UNITS. PROVIDE STRAP ANCHORS AT JAMBS OF MASONRY INFILL UNITS. PAINT ENTIRE INTERIOR WALL OF REAR OFFICE 109 WHERE NEW MASONRY UNITS ARE INSTALLED.

3 PROVIDE NEW THERMALLY BROKEN ALUMINUM STOREFRONT WINDOW. COLOR AS SELECTED BY ARCHITECT AND OWNER'S REPRESENTATIVE FROM MANUFACTURER'S STANDARD COLORS. DOUBLE GLAZE PER SPECIFICATIONS. COORDINATE WITH EXISTING CONDITIONS AND WITH NEW EXTERIOR BUILDING FINISHES. PROVIDE 1/2" WIDE TO 3/8" WIDE BACKER ROD AND SEALANT JOINT.

4 CONTRACTOR TO PROVIDE NEW ALUMINUM CANOPIES. PROVIDE ROOF DRAINAGE, GUTTERS, DOWNSPOUTS, AND COMPONENTS FOR FULL INSTALLATION. COORDINATE WITH NEW EXTERIOR WALL FINISH. PROVIDE NEW ALUMINUM FLASHING PER SMACNA AT CONNECTION OF CANOPY TO BUILDING WALL. FASTEN TO EXISTING BUILDING PER REQUIREMENTS OF ALABAMA LICENSED STRUCTURAL ENGINEER.

5 MOUNT FILTER CRUSHER. EPOXY BOLT EQUIPMENT TO EXISTING CONCRETE FLOOR.

6 MOUNT HYDRAULIC PRESS. EPOXY BOLT EQUIPMENT TO EXISTING CONCRETE FLOOR.

7 PATCH EXISTING HOLE IN CMU WALL. PROVIDE INFILL CONCRETE MASONRY WALL UNITS MATCHING EXISTING WIDTH OF WALL UNITS. PROVIDE STRAP ANCHORS AT JAMBS OF MASONRY INFILL UNITS. PAINT ENTIRE INTERIOR AND EXTERIOR WALL OF PARTS ROOM 107 WHERE NEW MASONRY UNITS ARE INSTALLED.

8 INFILL EXISTING CONCRETE MASONRY WALL UNITS MATCHING EXISTING WIDTHS OF WALL UNITS. PROVIDE STRAP ANCHORS AT JAMBS OF MASONRY INFILL UNITS. PROVIDE NEW 10X14 ROLL UP DOOR ASSEMBLIES AND NEW 3X7 EGRESS DOOR CENTERED ON WALL INFILL. REFER TO ELEVATIONS AND STRUCTURAL FOR NEW DOOR AND INFILL LOCATIONS. PAINT ENTIRE INTERIOR WALL IN RECEIVING 111 WHERE NEW MASONRY UNITS ARE INSTALLED.

9 PAINT EXISTING TO REMAIN BOLLARDS.

10 INSTALL NEW 6" CONCRETE FILLED BOLLARD - PAINT.

11 PAINT EXISTING TO REMAIN OVERHEAD COILING DOOR FRAME (JAMB AND HEAD). COLORS TO BE SELECTED BY OWNER AND ARCHITECT.

12 PAINT ALL EXPOSED STRUCTURAL MEMBERS INCLUDING COLUMNS, ROOF FRAMING, AND PURLINS.

13 ALL EXTERIOR CMU TO BE POWER WASHED, TUCK-POINTED AS REQUIRED, PRIMED, AND TO RECEIVE NEW PAINT.

14 INSTALL NEW SINK - REFER TO PLUMBING.

15 CONTRACTOR TO VERIFY WORKING EXISTING PART WASHERS PRIOR TO MOVEMENT FOR CONSTRUCTION WORK IN THIS AREA. CONTRACTOR IS RESPONSIBLE FOR INSTALLING PART WASHERS BACK IN ORIGINAL LOCATIONS AND VERIFY EQUIPMENT IS WORKING AT THE END OF THE PROJECT.

16 CONTRACTOR TO PROVIDE NEW ALUMINUM CANOPY AS SHOWN. FIELD VERIFY EXISTING CONDITIONS AND PROVIDE SHOP DRAWINGS AS REQUIRED.

SEAY SEAY & LITCHFIELD

1115 South Court Street
Montgomery, AL 36104
(334) 263-5162

Owner:
The Armory Commission of Alabama
1720 Cong Wl. Dickinson Drive
Montgomery, AL 36109

SS&L Job Number
14057

IFB Job Number
AC-22-B-0004-S

Date
JANUARY 2022

Drawn By
CMI, SS, TS, DC

Checked By
WRO

Revised
-

Project Title
NORTHPORT
FMS #9 RENOVATIONS
NORTHPORT, AL

Sheet Title
GENERAL DEMOLITION
NOTES & SPECIFIC NOTES

Sheet Number
A1.0

STATE OF ALABAMA
MONTGOMERY
Jim R. Seay, Jr
1946
Gregory A. O'Neal
6043
Wesley R. Osmer
6244
ALABAMA
REGISTERED ARCHITECTS

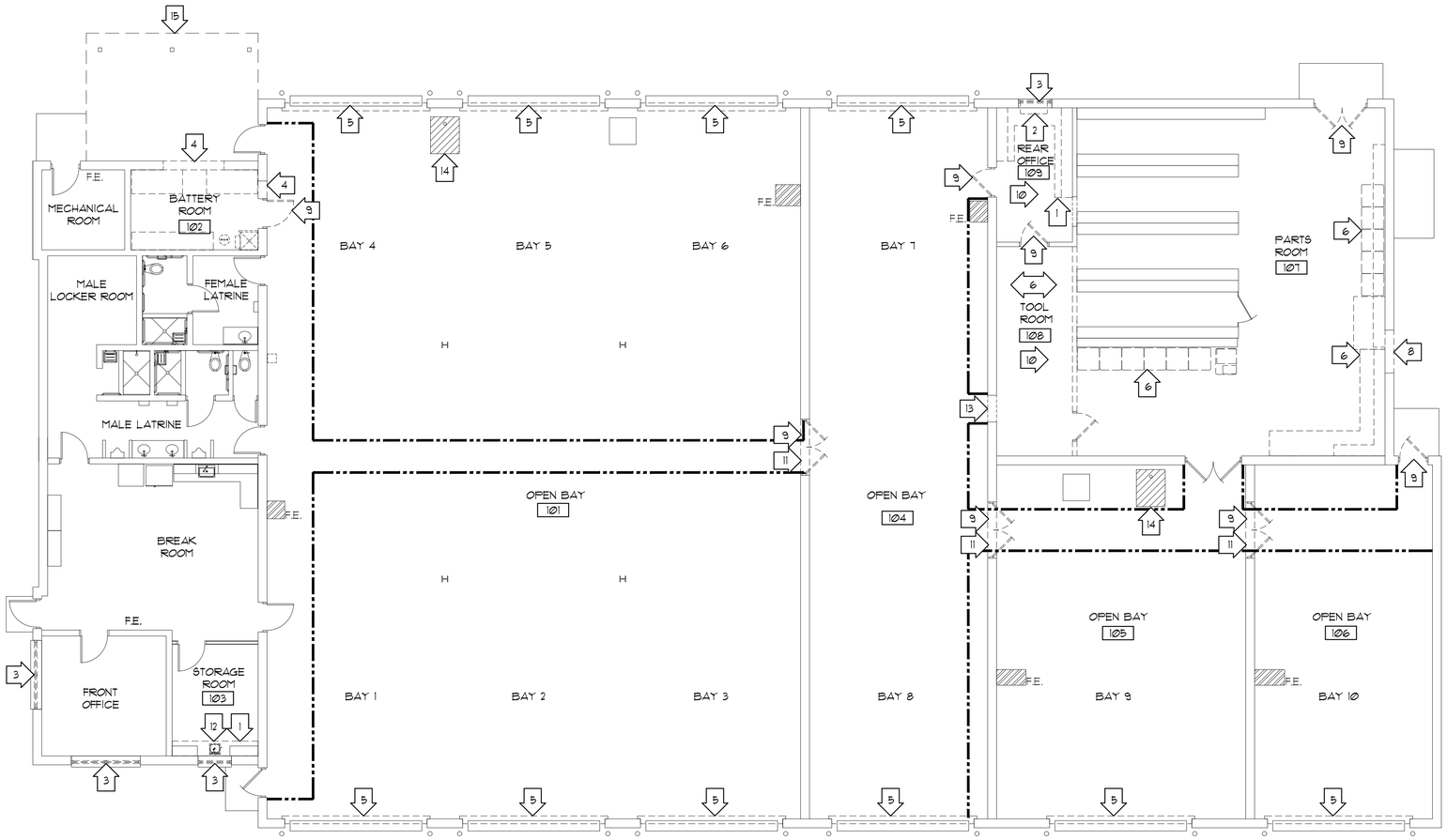

1 / A1.1 **EXISTING FLOOR PLAN - DEMOLITION**

SCALE: 1/8"=1'-0"

GRAPHIC SCALE

0 4 8 16 24

1/8" = 1'-0"

NOTES

REFER TO A1.0 FOR ALL GENERAL AND SPECIFIC DEMOLITION NOTES THAT APPLY.

LEGEND

- ROOM 100 — ROOM NAME AND NUMBER
- XXX — DOOR TAG. REFER TO DOOR SCHEDULE
- X — SPECIFIC NOTE. REFER TO A1.0
- F.E. — FIRE EXTINGUISHER
- EXISTING WALL PARTITION(S) TO BE REMOVED UNLESS OTHERWISE NOTED, SHORE AS REQUIRED
- EXISTING WALL TO REMAIN
- EXISTING DOOR TO BE REMOVED
- EXISTING ELECTRIC WATER COOLER TO REMAIN
- EXISTING PAINT STRIPES LINE ON CONCRETE FLOOR

NOTE: THE CONTRACTOR SHALL VERIFY ALL EXISTING CONDITIONS AND DIMENSIONS.

SEAY SEAY & LITCHFIELD
1115 South Court Street
Montgomery, AL 36104
(334) 263-5162

Owner:
The Armory Commission of Alabama
1720 Cong WL Dickinson Drive
Montgomery, AL 36109

SS&L Job Number
14057

IFB Job Number
AC-22-B-0004-S

Date
JANUARY 2022

Drawn By
CMI, SS, TS, DC

Checked By
WRO

Revised
-

Project Title
NORTHPORT
FMS #9 RENOVATIONS
NORTHPORT, AL

Sheet Title
EXISTING FLOOR PLAN - DEMOLITION

Sheet Number
A1.1

STATE OF ALABAMA
MONTGOMERY
Jim H. Seay, Jr.
1946
Gregory A. O'Neal
6043
Wesley E. Osmer
6744
ALABAMA
REGISTERED ARCHITECTS

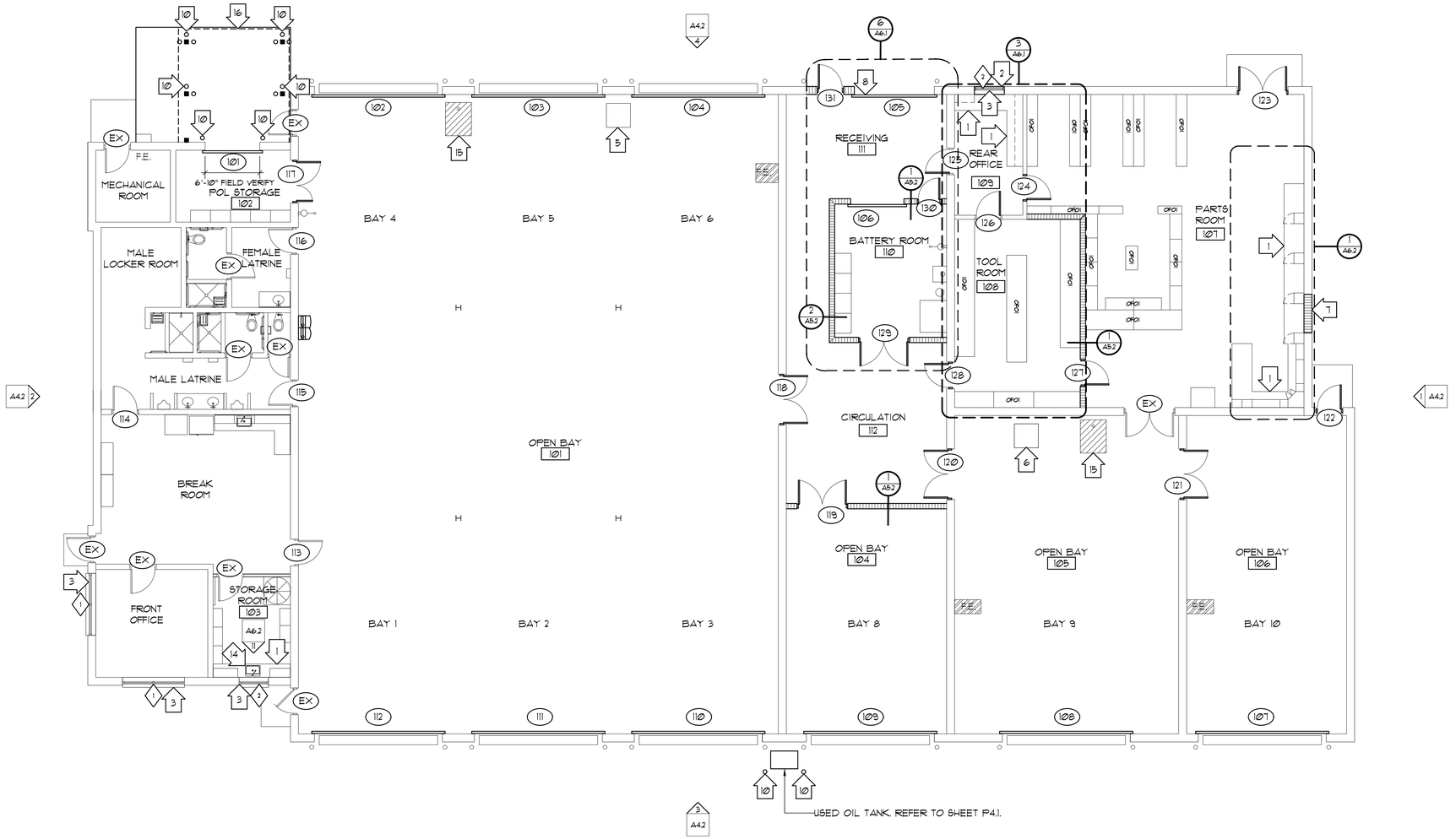

1 A2.1 NEW FLOOR PLAN

SCALE: 1/8"=1'-0"

GRAPHIC SCALE

0 4 8 16 24

1/8" = 1'-0"

NOTES

REFER TO A1.0 FOR ALL GENERAL AND SPECIFIC NOTES THAT APPLY.

LEGEND

- ROOM 100 — ROOM NAME AND NUMBER
- XXX — DOOR TAG. REFER TO DOOR SCHEDULE
- 4 — SPECIFIC NOTE. REFER TO A1.0
- FE — FIRE EXTINGUISHER - O.F.O.I.
- X / AXXX — ELEVATION TAG.
- XX / AXX — WALL SECTION
- X / XX — DETAIL
- X / XXX — BUILDING SECTION
- O.F.O.I. — OWNER FURNISHED OWNER INSTALLED
- NEW INTERIOR - CMU WALLS - EXTEND TO UNDERSIDE OF ROOF DECK
- NEW DOOR AND FRAME- SEE DOOR SCHEDULE
- NEW EMERGENCY EYEWASH/SHOWER - SEE PLUMBING

NOTE: THE CONTRACTOR SHALL VERIFY ALL EXISTING CONDITIONS AND DIMENSIONS.

SEAY SEAY & LITCHFIELD
1115 South Court Street
Montgomery, AL 36104
(334) 263-5162

Owner:
The Armory Commission of Alabama
1720 Cong Wl. Dickinson Drive
Montgomery, AL 36109

SS&L Job Number
14057

IFB Job Number
AC-22-B-0004-S

Date
JANUARY 2022

Drawn By
CMI, SS, TS, DC

Checked By
WRO

Revised
-

Project Title

NORTHPORT
FMS #9 RENOVATIONS
NORTHPORT, AL

Sheet Title

NEW FLOOR PLAN

Sheet Number

A2.1

STATE OF ALABAMA
MONTGOMERY
Jim H. Seay, Jr. 1914
Gregory A. O'Neal 6041
Wesley B. Osmer 6244
REGISTERED ARCHITECTS

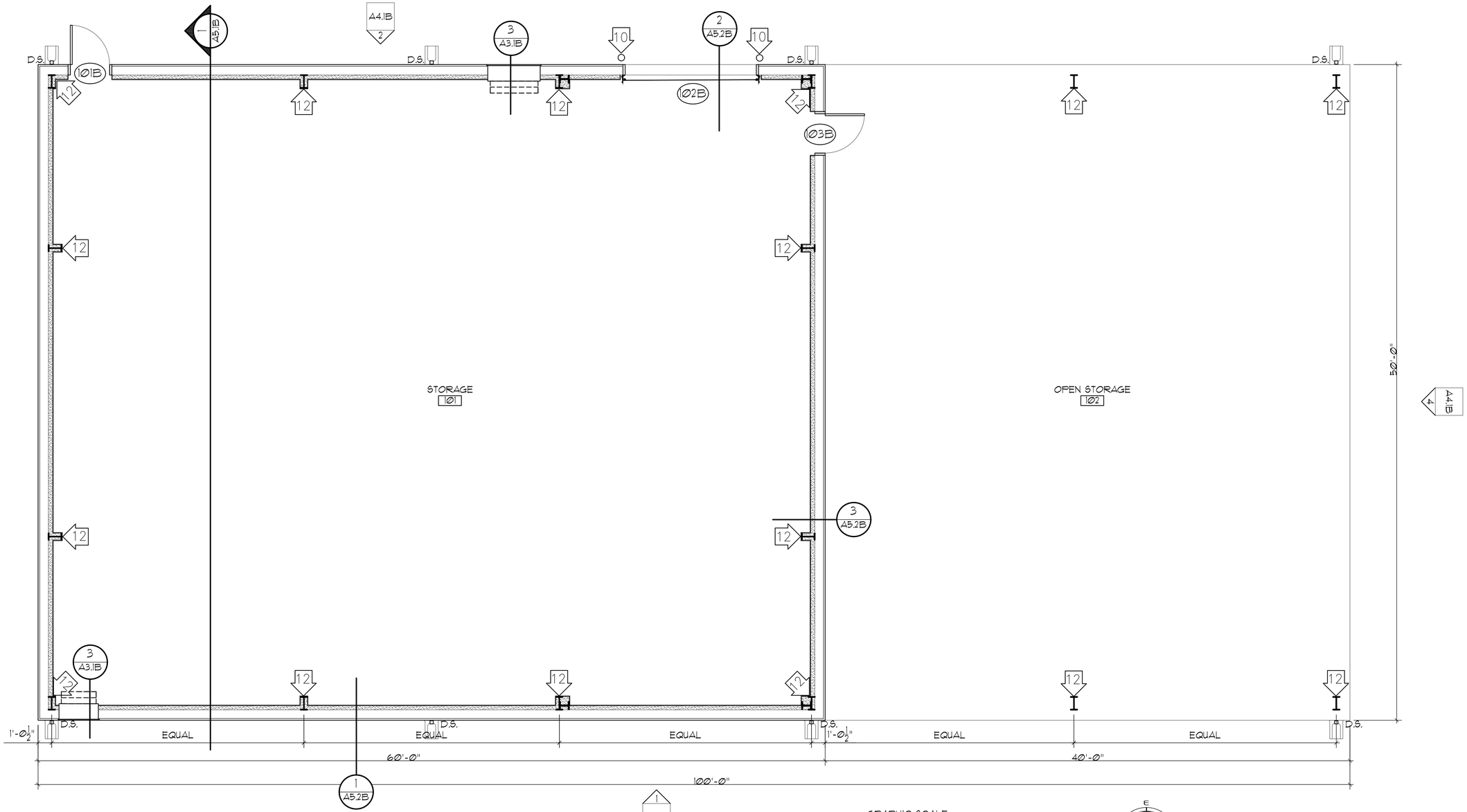

1 A2.1B **NEW METAL STORAGE BUILDING FLOOR PLAN**
SCALE: 1/4"=1'-0"

GENERAL NOTES

1.) GENERAL NOTES APPLY TO THE ENTIRE PROJECT. SPECIFIC NOTES (DESIGNATED ⇨) APPLY TO ISOLATED WORK AREAS AND ARE FOR THE CONVENIENCE OF THE CONTRACTOR. HOWEVER, ALL ISOLATED WORK AREAS ARE NOT NOTED. SHOULD A CONDITION OCCUR THAT IS NOT SPECIFICALLY NOTED, THE CONTRACTOR SHALL PROCEED WITH WORK PER GENERAL NOTES OR A SPECIFIC WORK NOTE(S) USED IN OTHER SIMILAR CONDITIONS, WHICHEVER IS MORE STRINGENT, PER APPROVAL OF ARCHITECT VIA OWNER.

2.) NOTIFY ARCHITECT IMMEDIATELY IF THERE ARE ANY DISCREPANCIES WITH TAGGED DETAILS, ENLARGED PLANS.

3.) THE GENERAL CONTRACTOR TO VISIT SITE AND TO BECOME TOTALLY FAMILIAR WITH EXTENT OF WORK REQUIRED.

4.) ALL OSHA AND APPLICABLE STANDARDS UPHELD TO ASSURE SAFETY OF ALL PERSONS ON SITE DURING ENTIRE COURSE OF CONSTRUCTION.

5.) ALL SHEET METAL WORK SHALL BE INSTALLED IN A CLEAN, NEAT, & PROFESSIONAL MANNER - PER SMACNA GUIDE LINES.

6.) REFER TO A1.0 FOR ALL GENERAL AND SPECIFIC NOTES THAT APPLY.

LEGEND

ROOM 100	ROOM NAME AND NUMBER	X AXXX	ELEVATION TAG.		METAL BUILDING WALL (REFER TO SPECIFICATIONS - SECTION 13 3410) 5/8" PLYWOOD ON 3-5/8" METAL STUDS (REFER TO SPECIFICATIONS - SECTION 09 2116) AT 16" O.C. VINYL FACED BATT INSULATION-R-19. METAL WALL PANEL SCREW TO PURLINS. PLYWOOD AND METAL STUDS TO EXTEND TO 8'-0" OFF FINISH FLOOR.
XXX	DOOR TAG. REFER TO DOOR SCHEDULE	XX AXX	WALL SECTION		
4	SPECIFIC NOTE. REFER TO A1.0	X XX	DETAIL		LOUVER - SEE MECHANICAL
FE	FIRE EXTINGUISHER	X XXX	BUILDING SECTION		

NOTE: THE CONTRACTOR SHALL VERIFY ALL EXISTING CONDITIONS AND DIMENSIONS.

SEAY SEAY & LITCHFIELD
1115 South Court Street
Montgomery, AL 36104
(334) 263-5162

Owner:
The Armory Commission of Alabama
1720 Cong Wl. Dickinson Drive
Montgomery, AL 36109

SS&L Job Number
14057

IFB Job Number
AC-22-B-0004-S

Date
JANUARY 2022

Drawn By
CMI, SS, TS, DC

Checked By
WRO

Revised
-

Project Title
NORTHPORT
FMS #9 RENOVATIONS
NORTHPORT, AL

Sheet Title
NEW FLOOR PLAN - STORAGE BUILDING

Sheet Number
A2.1B

STATE OF ALABAMA
MONTGOMERY
Jim H. Seay, Jr.
1846
Gregory A. O'Neal
6043
Wesley R. Osmer
6244
ALABAMA
REGISTERED ARCHITECTS

GENERAL NOTES

1.) PAINT ALL EXPOSED STRUCTURAL MEMBERS INCLUDING COLUMNS, ROOF FRAMING, AND PURLINS.

2.) REFER TO A1.0 FOR ALL GENERAL AND SPECIFIC NOTES THAT APPLY.

LEGEND

ROOM 100	ROOM NAME AND NUMBER
XXX	DOOR TAG. REFER TO DOOR SCHEDULE
4	SPECIFIC NOTE. REFER TO A1.0
X AXXX	ELEVATION TAG.
XX AXX	WALL SECTION
X XX	DETAIL
X XXX	BUILDING SECTION

NOTE: THE CONTRACTOR SHALL VERIFY ALL EXISTING CONDITIONS AND DIMENSIONS.

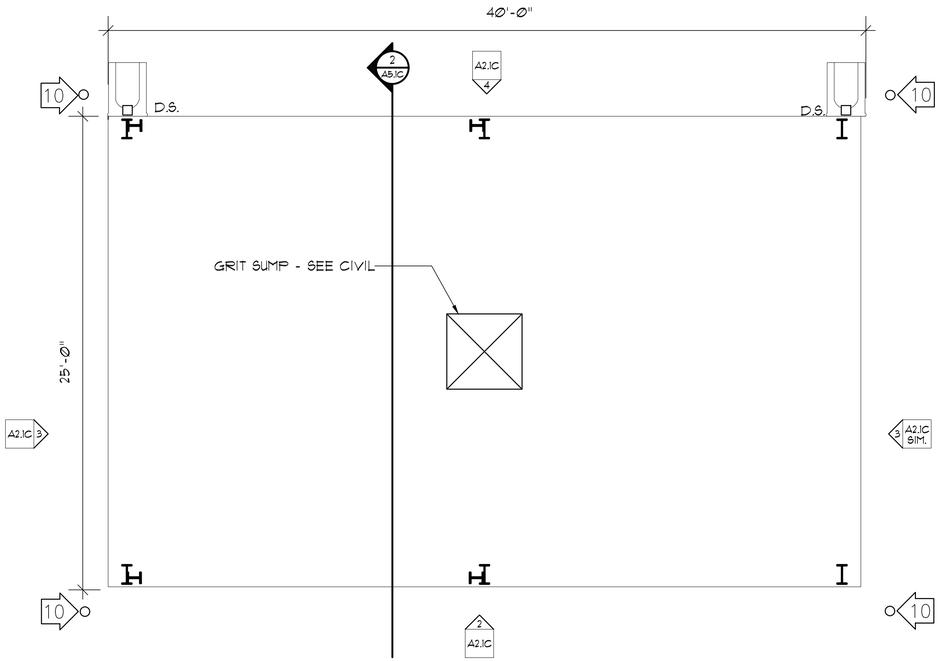

1 A2.1C NEW FLOOR PLAN, (WASH RACK)
SCALE: 1/4"=1'-0"

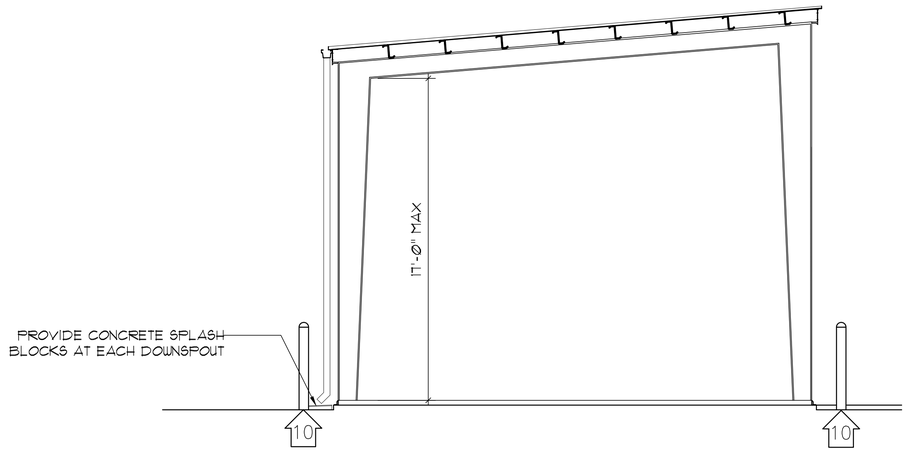

3 A2.1C SOUTH ELEVATION
SCALE: 1/4"=1'-0"

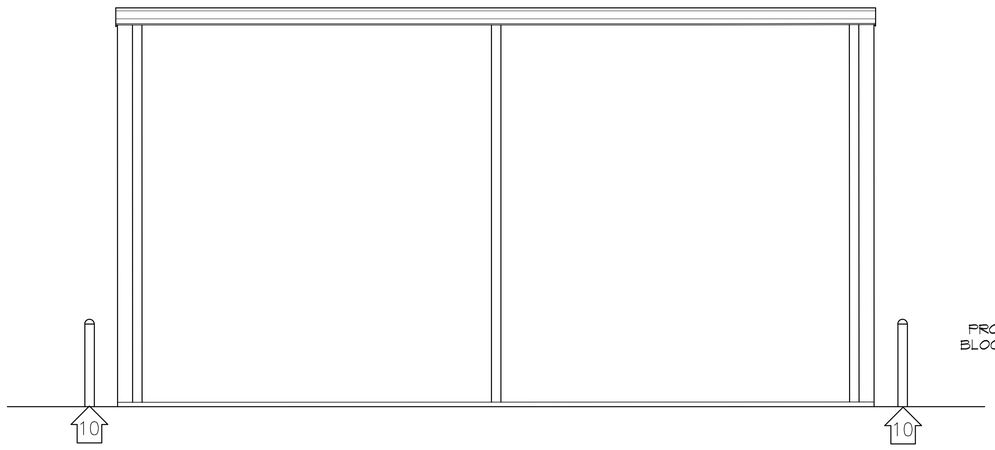

2 A2.1C EAST ELEVATION
SCALE: 1/4"=1'-0"

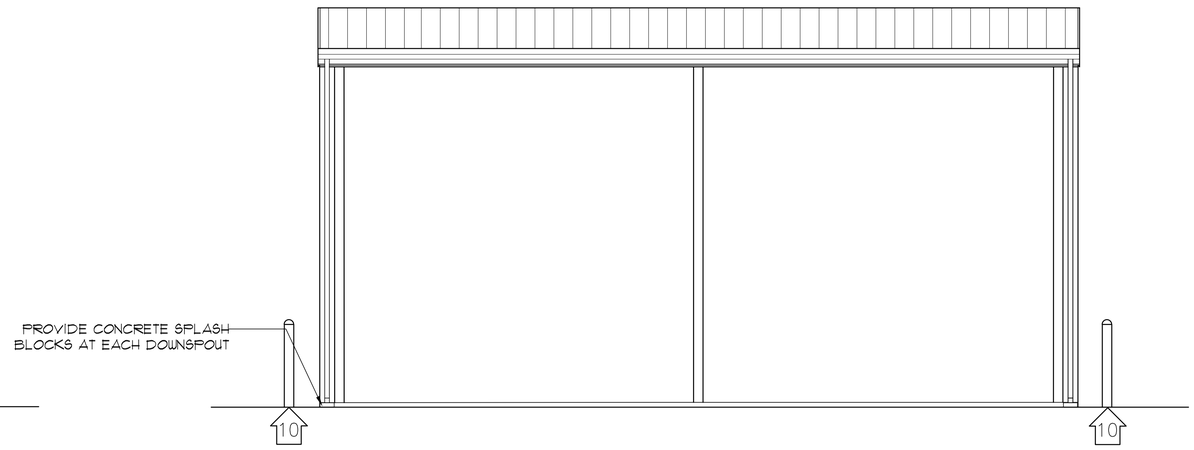

4 A2.1C WEST ELEVATION
SCALE: 1/4"=1'-0"

SEAY SEAY & LITCHFIELD
1115 South Court Street
Montgomery, AL 36104
(334) 263-5162

Owner:
The Armory Commission of Alabama
1720 Cong WL Dickinson Drive
Montgomery, AL 36109

SS&L Job Number
14057

IFB Job Number
AC-22-B-0004-S

Date
JANUARY 2022

Drawn By
CMI, SS, TS, DC

Checked By
WRO

Revised
-

Project Title
NORTHPORT
FMS #9 RENOVATIONS
NORTHPORT, AL

Sheet Title
NEW WASH RACK FLOOR PLAN AND ELEVATIONS – BID ITEM A ALTERNATE NO.1

Sheet Number
A2.1C

STATE OF ALABAMA
MONTGOMERY
Jim H. Seay, Jr.
1846
Gregory A. O'Neal
6043
Wesley R. Osmer
6244
ALABAMA
REGISTERED ARCHITECTS

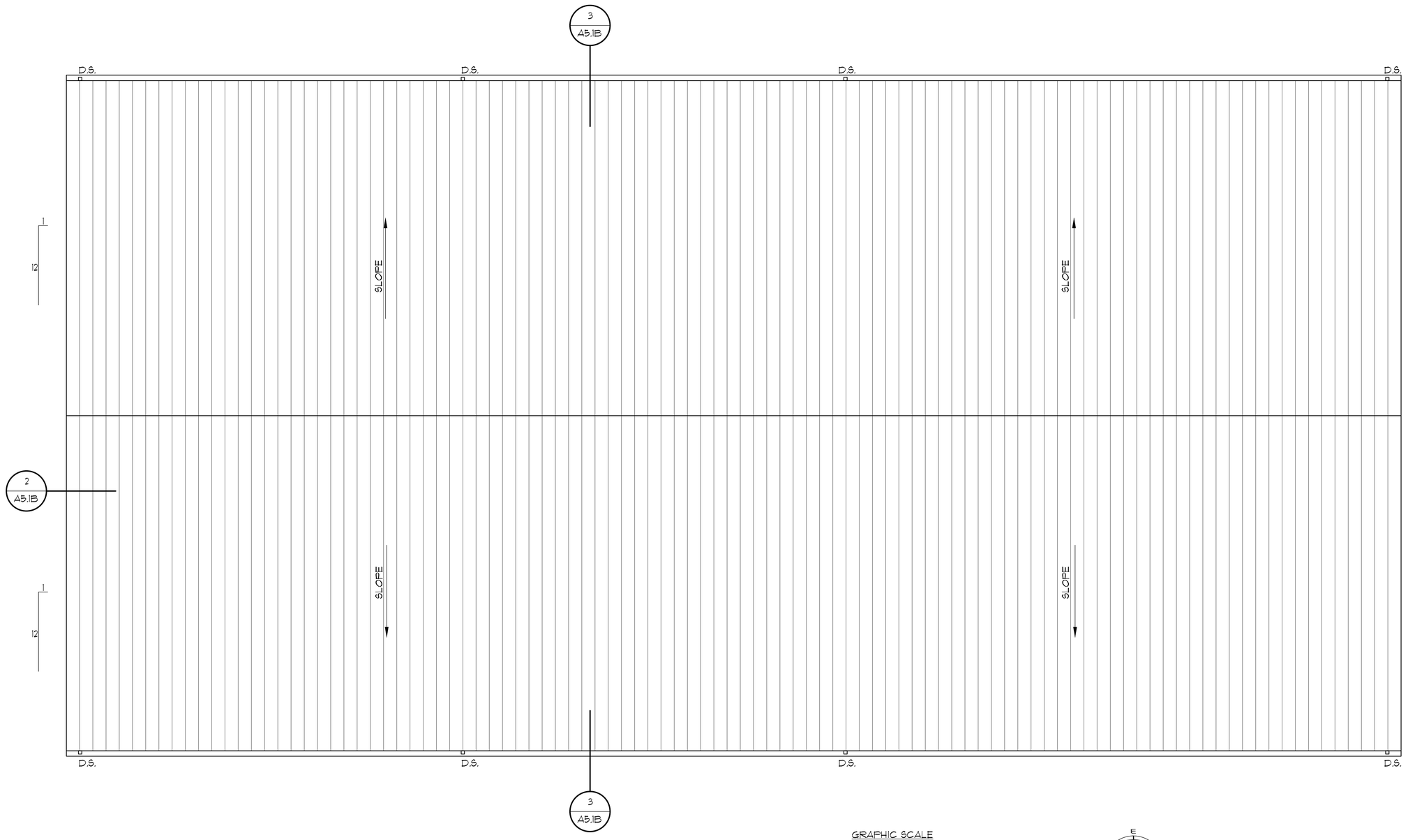

1 / A2.2B **NEW METAL BUILDING ROOF PLAN**

SCALE: 1/4"=1'-Ø"

GRAPHIC SCALE

Ø 1 2 4 6 8 10 12

1/4" = 1'-Ø"

LEGEND

□ D.S. DOWNSPOUT

(X / XXX) DETAIL TAG

GENERAL NOTES

1.) ROOF PANELS SHALL BE CONTINUOUS - NO EXPOSED FASTENERS

2.) REFER TO A1.Ø FOR ALL GENERAL AND SPECIFIC NOTES THAT APPLY.

SEAY SEAY & LITCHFIELD

1115 South Court Street
Montgomery, AL 36104
(334) 263-5162

Owner:
The Armory Commission of Alabama
1720 Cong WL Dickinson Drive
Montgomery, AL 36109

SS&L Job Number
14057

IFB Job Number
AC-22-B-ØØØ4-S

Date
JANUARY 2Ø22

Drawn By
CMI, SS, TS, DC

Checked By
WRO

Revised
-

Project Title

NORTHPORT
FMS #9 RENOVATIONS
NORTHPORT, AL

Sheet Title

NEW STORAGE BUILDING
ROOF PLAN

Sheet Number

A2.2B

STATE OF ALABAMA
MONTGOMERY
Jim H. Seay, Jr.
1646
Gregory A. O'Neal
6043
Wesley E. Osmer
6244
ALABAMA
REGISTERED ARCHITECTS

FINISH SCHEDULE

ROOM NUMBER	ROOM NAME	FLOOR	BASE	WALL	CEILING	NOTES
		MATERIAL	MATERIAL	MATERIAL & FINISH	MATERIAL	
101	OPEN BAY 1-6	CONCRETE - EXISTING TO REMAIN, NEW SEALANT	-	EXISTING CMU - NEW PAINT	STEEL / METAL DECKING TO REMAIN - NEW PAINT	
102	POL STORAGE	CONCRETE - EXISTING TO REMAIN, NEW SEALANT	-	EXISTING CMU - NEW PAINT	STEEL / METAL DECKING TO REMAIN - NEW PAINT	
103	STORAGE ROOM	HARD TILE - EXISTING TO REMAIN	-	EXISTING CMU - NEW PAINT	EXISTING IS TO REMAIN ACOUSTICAL TILE	
104	OPEN BAY 8	CONCRETE - EXISTING TO REMAIN, NEW SEALANT	-	EXISTING CMU - NEW PAINT	STEEL / METAL DECKING TO REMAIN - NEW PAINT	
105	OPEN BAY 9	CONCRETE - EXISTING TO REMAIN, NEW SEALANT	-	EXISTING CMU - NEW PAINT	STEEL / METAL DECKING TO REMAIN - NEW PAINT	
106	OPEN BAY 10	CONCRETE - EXISTING TO REMAIN, NEW SEALANT	-	EXISTING CMU - NEW PAINT	STEEL / METAL DECKING TO REMAIN - NEW PAINT	
107	PARTS ROOM	CONCRETE - EXISTING TO REMAIN, NEW SEALANT	-	EXISTING CMU - NEW PAINT	ACOUSTICAL TILE TYPE 1	
108	TOOL ROOM	REMOVE EXISTING VCT. EXISTING CONCRETE TO REMAIN, NEW SEALANT	-	EXISTING CMU - NEW PAINT	ACOUSTICAL TILE TYPE 1	
109	REAR OFFICE	REMOVE EXISTING VCT. EXISTING CONCRETE TO REMAIN, NEW SEALANT	-	EXISTING CMU - NEW PAINT	ACOUSTICAL TILE TYPE 1	
110	BATTERY ROOM	CONCRETE - EXISTING TO REMAIN, NEW SEALANT	-	EXISTING CMU - NEW PAINT	STEEL / METAL DECKING TO REMAIN - NEW PAINT	
111	RECEIVING	CONCRETE - EXISTING TO REMAIN, NEW SEALANT	-	EXISTING CMU - NEW PAINT	STEEL / METAL DECKING TO REMAIN - NEW PAINT	
112	CIRCULATION	CONCRETE - EXISTING TO REMAIN, NEW SEALANT	-	EXISTING CMU - NEW PAINT	STEEL / METAL DECKING TO REMAIN - NEW PAINT	

DOOR, OPENING AND FRAME SCHEDULE

DOOR NUMBER	OPENING SIZE W	OPENING SIZE H	OPENING SIZE T	DOOR TYPE	FRAME TYPE	NO. OF LEAVES	HEAD DETAIL	JAMB DETAIL	NOTES	FIRE RATING
101	6'-10"	8'-0"	-	D3	-	1	5/A3.2	3/A3.2	ROLL-UP DOOR. FIELD VERIFY DOOR WIDTH WITH EXISTING CONDITIONS	-
102	16'-0"	14'-0"	-	D3	ETR	1	4/A3.2	2/A3.2	1. 2. ROLL-UP DOOR. COORDINATE WITH EXISTING OPENING AND HEIGHT	-
103	16'-0"	14'-0"	-	D3	ETR	1	4/A3.2	2/A3.2	1. 2. ROLL-UP DOOR. COORDINATE WITH EXISTING OPENING AND HEIGHT	-
104	16'-0"	14'-0"	-	D3	ETR	1	4/A3.2	2/A3.2	1. 2. ROLL-UP DOOR. COORDINATE WITH EXISTING OPENING AND HEIGHT	-
105	10'-0"	14'-0"	-	D3	-	1	2/A3.3, 5/A3.2	1/A3.3, 3/A3.2	2. ROLL-UP DOOR.	-
106	6'-8"	10'-0"	-	D3	-	1	2/A3.3	1/A3.3	ROLL-UP DOOR.	-
107	16'-0"	14'-0"	-	D3	ETR	1	4/A3.2	2/A3.2	1. 2. ROLL-UP DOOR. COORDINATE WITH EXISTING OPENING AND HEIGHT	-
108	16'-0"	14'-0"	-	D3	ETR	1	4/A3.2	2/A3.2	1. 2. ROLL-UP DOOR. COORDINATE WITH EXISTING OPENING AND HEIGHT	-
109	16'-0"	14'-0"	-	D3	ETR	1	4/A3.2	2/A3.2	1. 2. ROLL-UP DOOR. COORDINATE WITH EXISTING OPENING AND HEIGHT	-
110	16'-0"	14'-0"	-	D3	ETR	1	4/A3.2	2/A3.2	1. 2. ROLL-UP DOOR. COORDINATE WITH EXISTING OPENING AND HEIGHT	-
111	16'-0"	14'-0"	-	D3	ETR	1	4/A3.2	2/A3.2	1. 2. ROLL-UP DOOR. COORDINATE WITH EXISTING OPENING AND HEIGHT	-
112	16'-0"	14'-0"	-	D3	ETR	1	4/A3.2	2/A3.2	1. 2. ROLL-UP DOOR. COORDINATE WITH EXISTING OPENING AND HEIGHT	-
113	ETR	ETR	-	ETR	ETR	ETR	ETR	ETR	1. REPLACE OLD HARDWARE TO NEW HARDWARE/ SEE SPECIFICATION SECTION 08 7100.	-
114	ETR	ETR	-	ETR	ETR	ETR	ETR	ETR	1. REPLACE OLD HARDWARE TO NEW HARDWARE/ SEE SPECIFICATION SECTION 08 7100.	-
115	ETR	ETR	-	ETR	ETR	ETR	ETR	ETR	1. REPLACE OLD HARDWARE TO NEW HARDWARE/ SEE SPECIFICATION SECTION 08 7100.	-
116	ETR	ETR	-	ETR	ETR	ETR	ETR	ETR	1. REPLACE OLD HARDWARE TO NEW HARDWARE/ SEE SPECIFICATION SECTION 08 7100.	-
117	5'-0"	7'-0"	2"	D1	F2	2	1/A3.2 SIM.	1/A3.2	ENSURE ONE OF THE DOORS IS 3'-0" DOOR AND THE OTHER DOOR IS 2'-0" DOOR. SEE FLOOR PLAN.	-
118	6'-0"	9'-0"	2"	D1	F2	2	1/A3.2 SIM.	1/A3.2		-
119	6'-0"	9'-0"	2"	D1	F2	2	1/A3.2 SIM.	1/A3.2		-
120	6'-0"	9'-0"	2"	D1	F2	2	1/A3.2 SIM.	1/A3.2		-
121	6'-0"	9'-0"	2"	D1	F2	2	1/A3.2 SIM.	1/A3.2		-
122	3'-0"	7'-0"	2"	D2	F1	1	1/A3.2 SIM.	1/A3.2		-
123	6'-0"	7'-0"	2"	D1	F2	2	1/A3.2 SIM.	1/A3.2		-
124	3'-0"	7'-0"	2"	D2	F1	1	1/A3.2 SIM.	1/A3.2		-
125	3'-0"	7'-0"	2"	D2	F1	1	1/A3.2 SIM.	1/A3.2		-
126	3'-0"	7'-0"	2"	D1	F1	1	1/A3.2 SIM.	1/A3.2		-
127	3'-0"	7'-0"	2"	D1	F1	1	1/A3.2 SIM.	1/A3.2		-
128	3'-0"	7'-0"	2"	D1	F1	1	1/A3.2 SIM.	1/A3.2		-
129	6'-0"	7'-0"	2"	D1	F2	2	1/A3.2 SIM.	1/A3.2		-
130	3'-0"	7'-0"	2"	D4	F1	1	1/A3.2 SIM.	1/A3.2	UNDERCUT DOOR 3/4", 24 X 24 LOUVER THROUGH DOOR	
131	3'-0"	7'-0"	2"	D2	F1	1	1/A3.2 SIM.	1/A3.2		

DOOR TYPES

GENERAL NOTE: CONTRACTOR TO FIELD VERIFY ALL DIMENSIONS PRIOR TO BEGINNING ANY WORK. COORDINATE ALL OPENINGS WITH DOOR SCHEDULE.

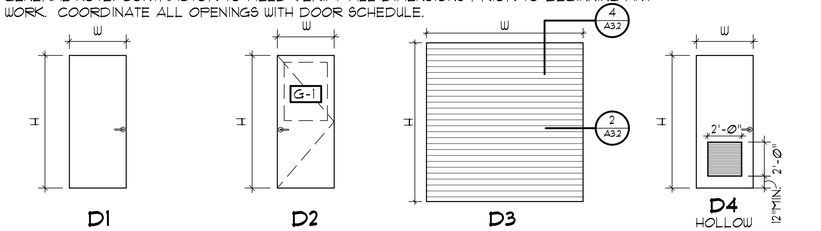

D1 INSULATED HOLLOW METAL

D2 INSULATED HOLLOW METAL

D3 OVERHEAD DOOR

D4 HOLLOW METAL DOOR WITH LOUVER

FRAME TYPES

GENERAL NOTE: CONTRACTOR TO FIELD VERIFY ALL DIMENSIONS PRIOR TO BEGINNING ANY WORK. COORDINATE ALL OPENINGS WITH DOOR SCHEDULE.

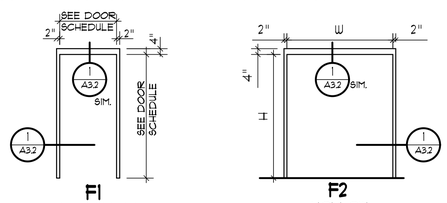

F1 HOLLOW METAL FRAME

F2 HOLLOW METAL FRAME

WINDOW/STOREFRONT SCHEDULE

GENERAL NOTE: CONTRACTOR TO FIELD VERIFY ALL DIMENSIONS PRIOR TO BEGINNING ANY WORK. COORDINATE ALL OPENINGS WITH WINDOW/STOREFRONT SCHEDULE.

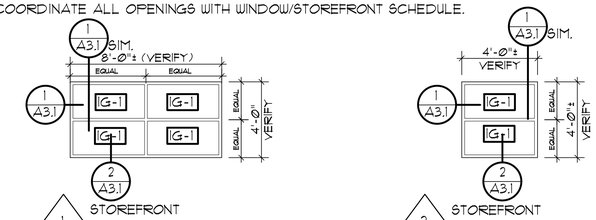

1 STOREFRONT
SCALE: 1/4" = 1'-0"
FINISH: AS SPECIFIED

2 STOREFRONT
SCALE: 1/4" = 1'-0"
FINISH: AS SPECIFIED

STOREFRONT DETAILS

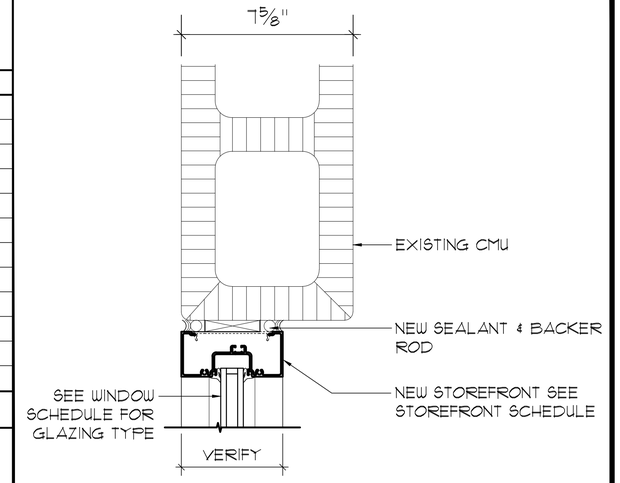

1 / A3.1 **STOREFRONT JAMB/HEAD DETAIL**
SCALE: 3" = 1'-0"

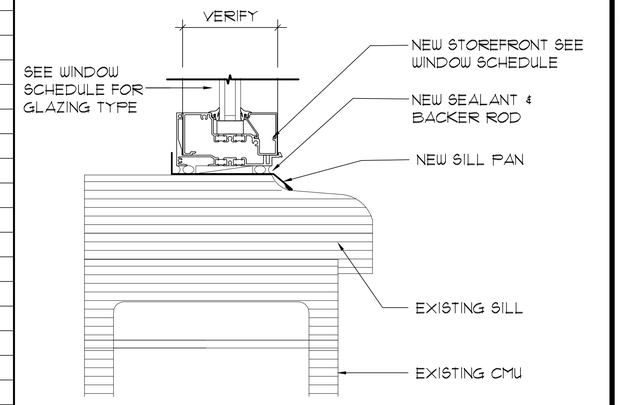

2 / A3.1 **WINDOW SILL DETAIL**
SCALE: 3" = 1'-0"

DOOR SCHEDULE NOTES

GENERAL NOTE: ALL EXISTING DOOR HARDWARE CORES ARE TO BE REMOVED AND REPLACED FOR ONE MASTER KEYING SYSTEM.

SPECIFIC NOTES:

1. PROVIDE NEW PAINT TO EXISTING TO REMAIN HOLLOW METAL DOOR FRAME.
2. PROVIDE NEW OPERATING SYSTEM FOR ROLL-UP DOORS AT MAINTENCE BAYS.

SEAY SEAY & LITCHFIELD
1115 South Court Street
Montgomery, AL 36104
(334) 263-5162

Owner:
The Armory Commission of Alabama
1720 Cong WL Dickinson Drive
Montgomery, AL 36109

SS&L Job Number
14057

IFB Job Number
AC-22-B-0004-S

Date
JANUARY 2022

Drawn By
CMI, SS, TS, DC

Checked By
WRO

Revised
-

Project Title
NORTHPORT
FMS #9 RENOVATIONS
NORTHPORT, AL

Sheet Title
FINISH SCHEDULE,
DOOR SCHEDULE,
& WINDOW SCHEDULE

Sheet Number
A3.1

STATE OF ALABAMA
MONTGOMERY
Jim H. Seay, Jr. 1946
Gregory A. O'Neal 6043
Wesley K. Osmer 6244
REGISTERED ARCHITECTS

FINISH SCHEDULE

ROOM NUMBER	ROOM NAME	FLOOR MATERIAL	BASE MATERIAL	WALL MATERIAL	WALL FINISHES	CEILING MATERIAL	CEILING FINISHES	REMARKS
101	STORAGE	SEALED CONCRETE	WOOD - 1x4 (PAINT)	5/8" PLYWOOD	NEW PAINT - SHERWIN WILLIAMS SW 7403 WORLDLY GREY	EXPOSED		
102	OPEN STORAGE	SEALED CONCRETE						

DOOR AND OPENING SCHEDULE

DOOR NO.	DOOR SIZE W	DOOR SIZE H	DOOR SIZE T	DOOR TYPE	FRAME TYPE	NO. OF LEAVES	GLAZING TYPE.	HEAD DETAIL	JAMB DETAIL	SILL DETAIL	NOTES: FOR ALL RATED DOORS, ADJUST FRAMING AND HARDWARE TO DOOR THICKNESS REQUIRED BY DOOR MANUFACTURER TO MEET ALL REQUIRED RATINGS.
101B	3'-0"	7'-0"	1 3/4"	D1	F1	1		1/A3.1B	1/A3.1B SIM.	-	PAINT (DOOR & FRAME)
102B	10'-0	10'-0"	-	D2	-	1		4/A3.1B	2/A3.1B	4/A3.1B	PAINT (DOOR & FRAME)
103B	3'-0"	7'-0"	1 3/4"	D1	F1	1		1/A3.1B	1/A3.1B SIM.	-	PAINT (DOOR & FRAME)

FRAME TYPES

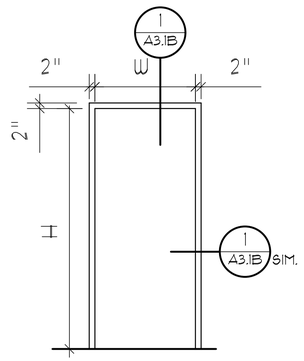

F1

HOLLOW METAL FRAME

DOOR TYPE

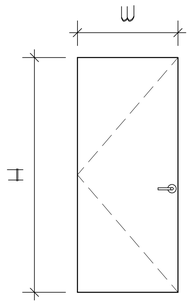

D1

HOLLOW METAL DOOR

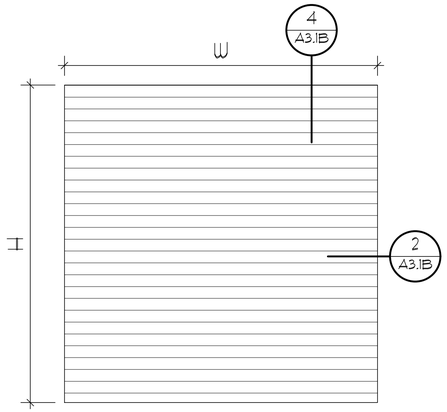

D2

OVERHEAD DOOR

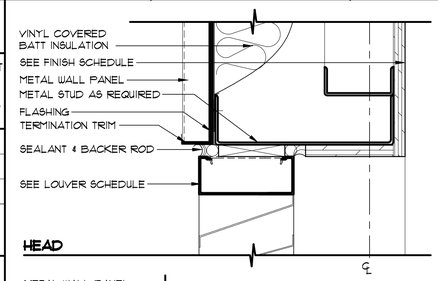

HEAD

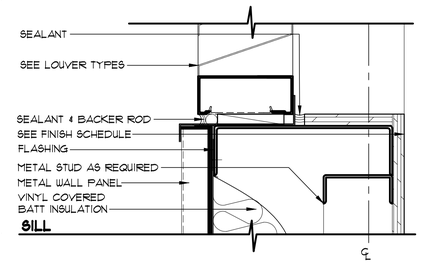

SILL

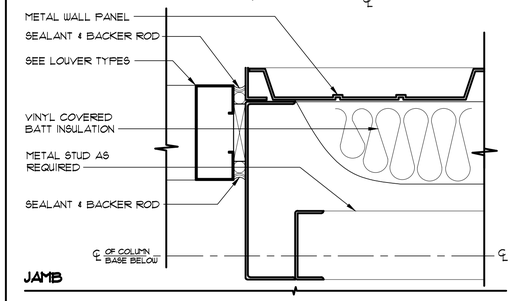

JAMB

3 A3.1B **LOUVER DETAILS**
SCALE: 3" = 1'-0"

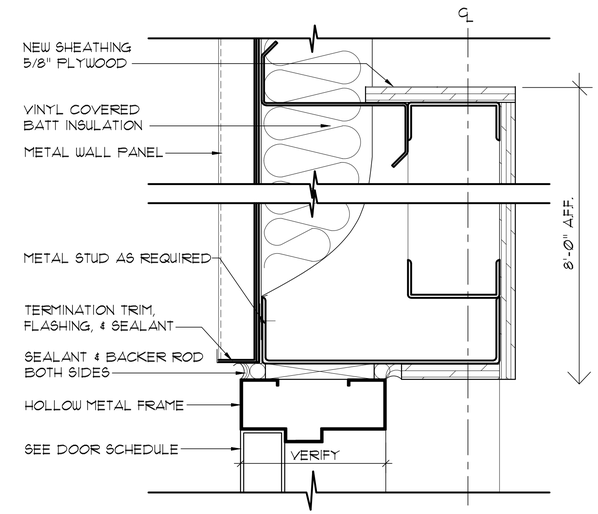

1 A3.1B **HEAD DETAIL**
SCALE: 3" = 1'-0"

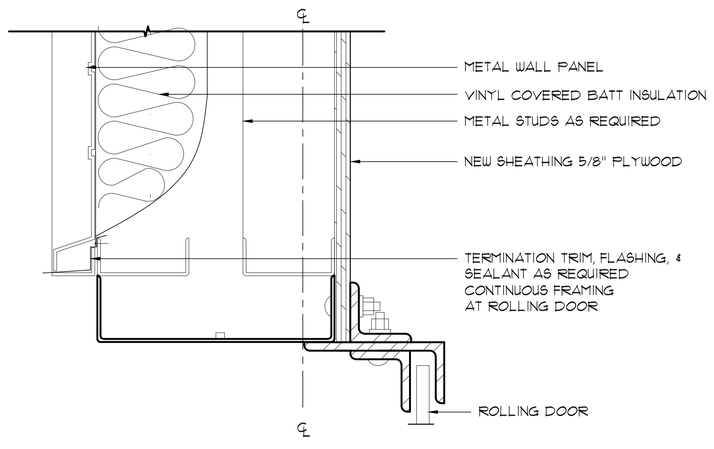

2 A3.1B **ROLLING DOOR JAMB DETAIL**
SCALE: 3" = 1'-0"

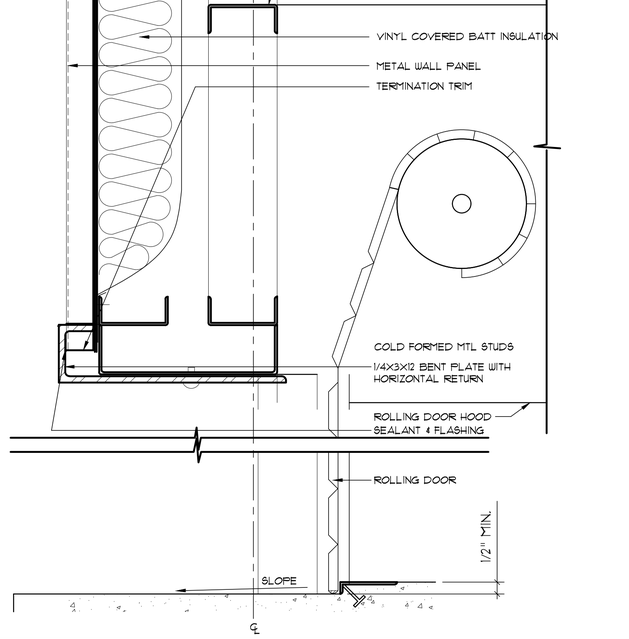

4 A3.1B **ROLLING DOOR HEAD/SILL DETAIL**
SCALE: 3" = 1'-0"

SEAY SEAY & LITCHFIELD
1115 South Court Street
Montgomery, AL 36104
(334) 263-5162

Owner:
The Armory Commission of Alabama
1720 Cong WL Dickinson Drive
Montgomery, AL 36109

SS&L Job Number
14057

IFB Job Number
AC-22-B-0004-S

Date
JANUARY 2022

Drawn By
CM, SS, TS, DC

Checked By
WRO

Revised
-

Project Title
NORTHPORT
FMS #9 RENOVATIONS
NORTHPORT, AL

Sheet Title
FINISH AND DOOR SCHEDULE- STORAGE BUILDING

Sheet Number
A3.1B

STATE OF ALABAMA
MONTGOMERY
Jim H. Seay, Jr. 1946
Gregory A. O'Neal 6043
Wesley E. Osmer 6244
ALABAMA
REGISTERED ARCHITECTS

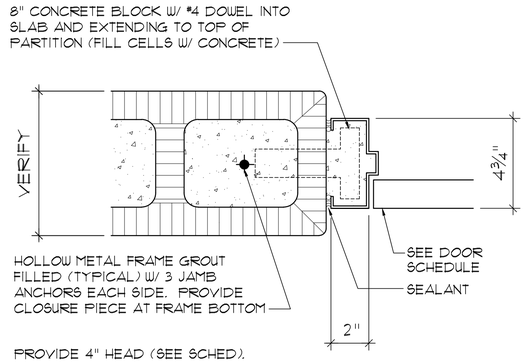

1 A3.2 **HOLLOW METAL JAMB DETAIL - HEAD @IM. W/ 9Ø CMU CORNERS**
SCALE: 3" = 1'-Ø"

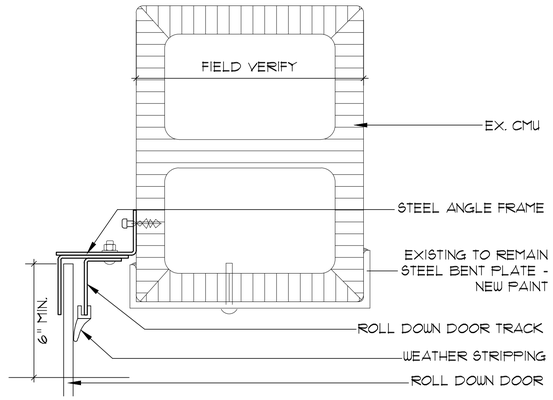

2 A3.2 **NEW ROLLING DOOR DETAIL - ETR WALL, ETR FRAME**
SCALE: 3" = 1'-Ø"

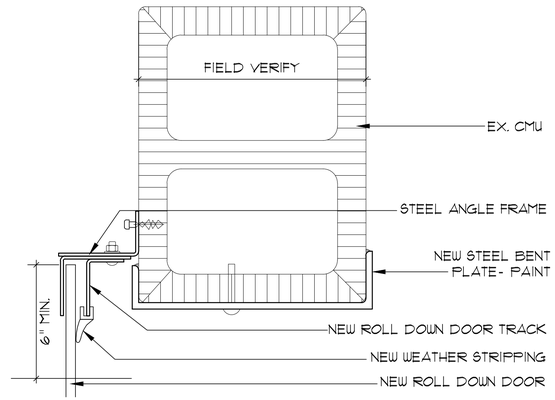

3 A3.2 **NEW ROLLING DOOR DETAIL - ETR WALL, NEW FRAME**
SCALE: 3" = 1'-Ø"

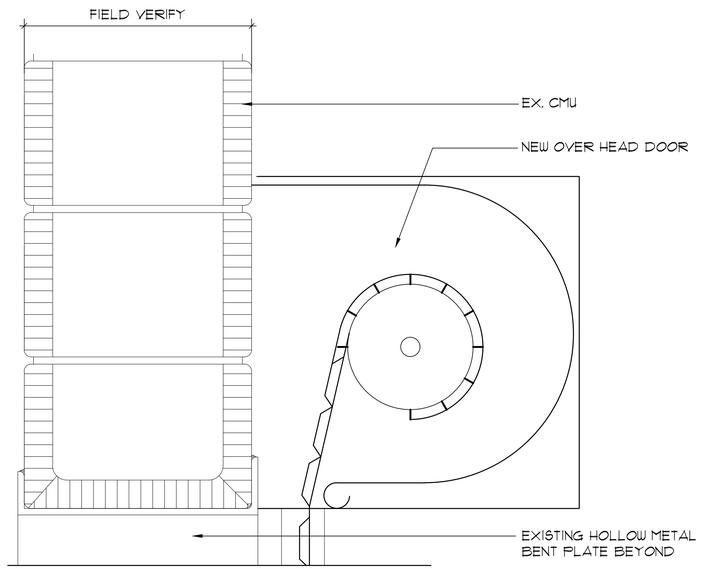

4 A3.2 **NEW ROLLING DOOR - HEAD DETAIL ETR WALL, ETR FRAME**
SCALE: 3" = 1'-Ø"

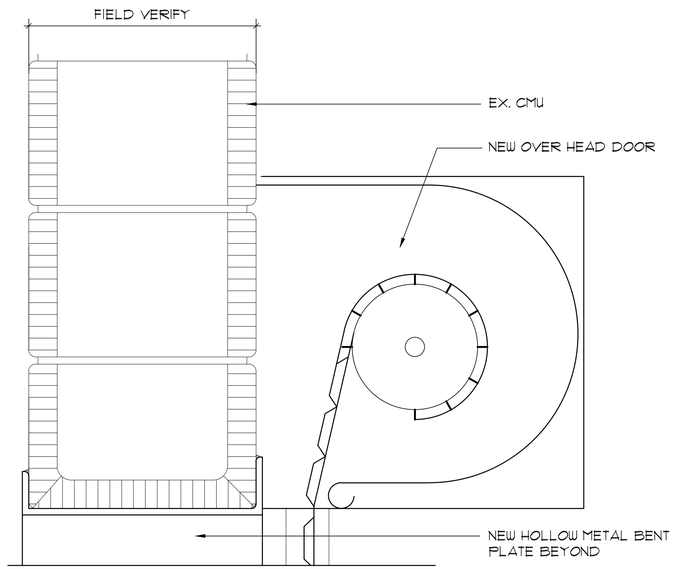

5 A3.2 **ROLLING DOOR - HEAD DETAIL ETR WALL, NEW FRAME**
SCALE: 3" = 1'-Ø"

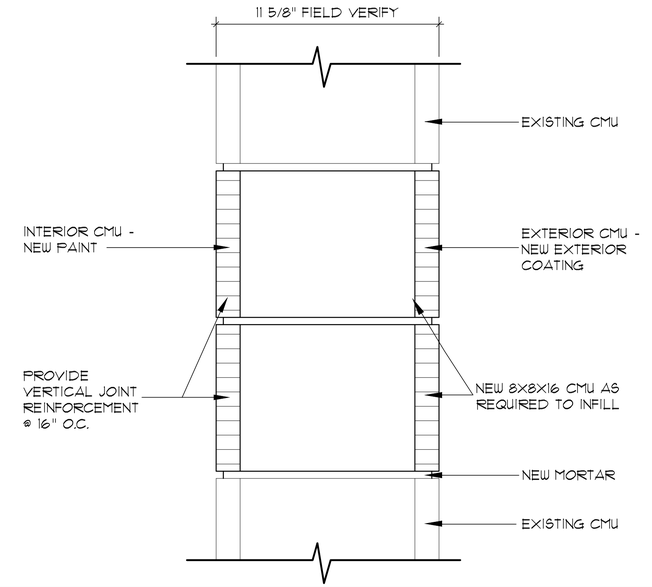

6 A3.2 **CMU INFILL - DETAIL**
SCALE: 3" = 1'-Ø"

SEAY SEAY & LITCHFIELD
1115 South Court Street
Montgomery, AL 36104
(334) 263-5162

Owner:
The Armory Commission of Alabama
1720 Cong WL Dickinson Drive
Montgomery, AL 36109

SS&L Job Number
14057

IFB Job Number
AC-22-B-0004-S

Date
JANUARY 2022

Drawn By
CMI, SS, TS, DC

Checked By
WRO

Revised
-

Project Title
NORTHPORT
FMS #9 RENOVATIONS
NORTHPORT, AL

Sheet Title
DETAILS

Sheet Number
A3.2

STATE OF ALABAMA
MONTGOMERY
Jim H. Seay, Jr.
1844
Gregory A. O'Neal
6040
Wesley R. Osmer
6244
REGISTERED ARCHITECTS

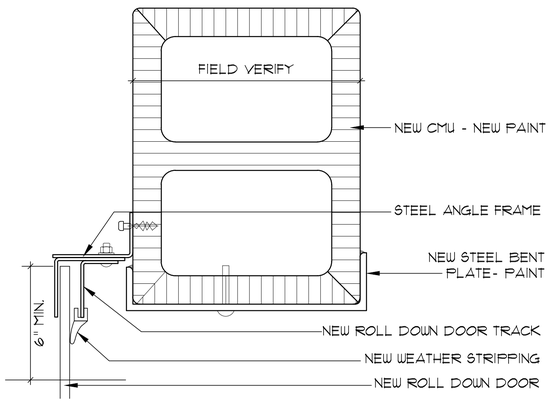

1 A3.3 **NEW ROLLING DOOR, FRAME, AND NEW WALL DETAIL**
SCALE: 3" = 1'-0"

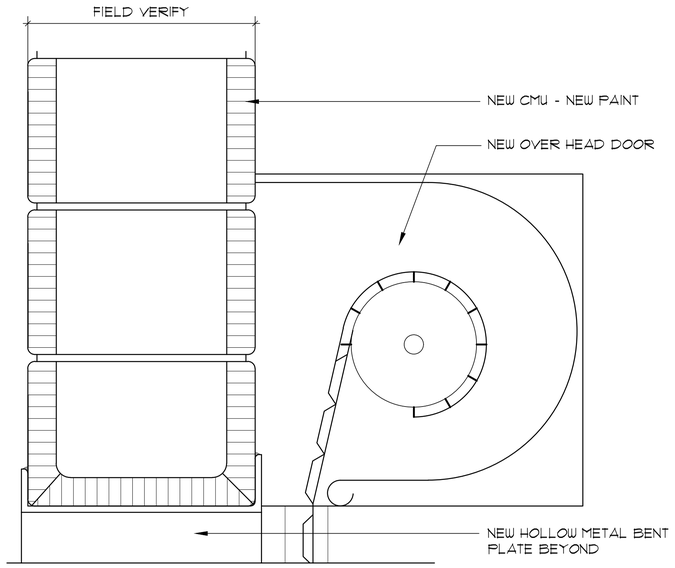

2 A3.3 **NEW ROLLING DOOR, FRAME, AND NEW WALL - HEAD DETAIL**
SCALE: 3" = 1'-0"

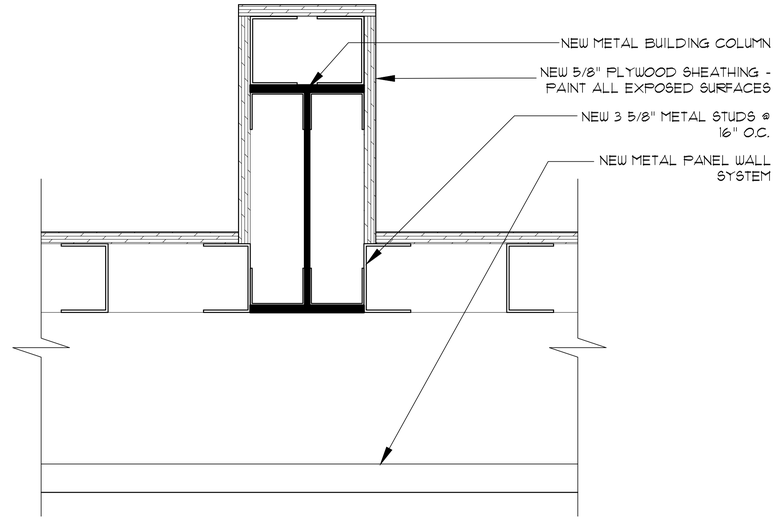

5 A3.3 **PLYWOOD SHEATHING COLUMN WRAP DETAIL**
SCALE: 3" = 1'-0"

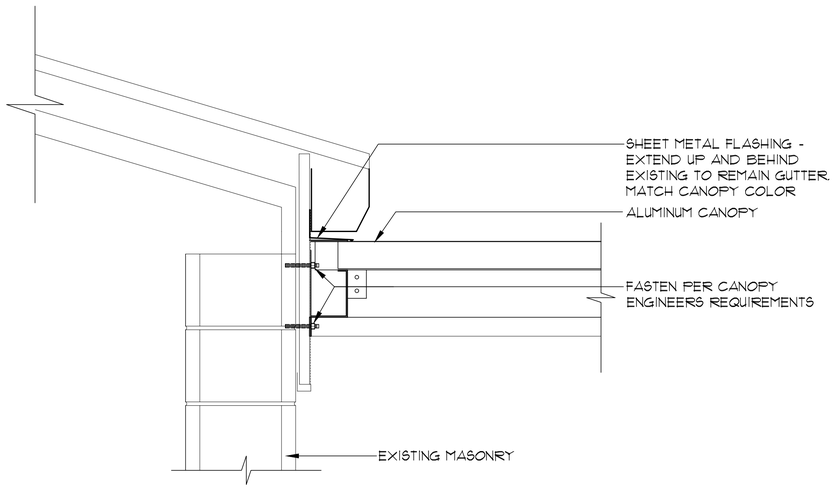

3 A3.3 **CANOPY DETAIL**
SCALE: 1 1/2" = 1'-0"

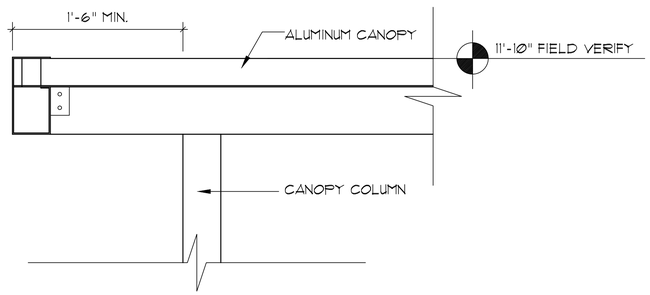

4 A3.3 **CANOPY DETAIL**
SCALE: 1 1/2" = 1'-0"

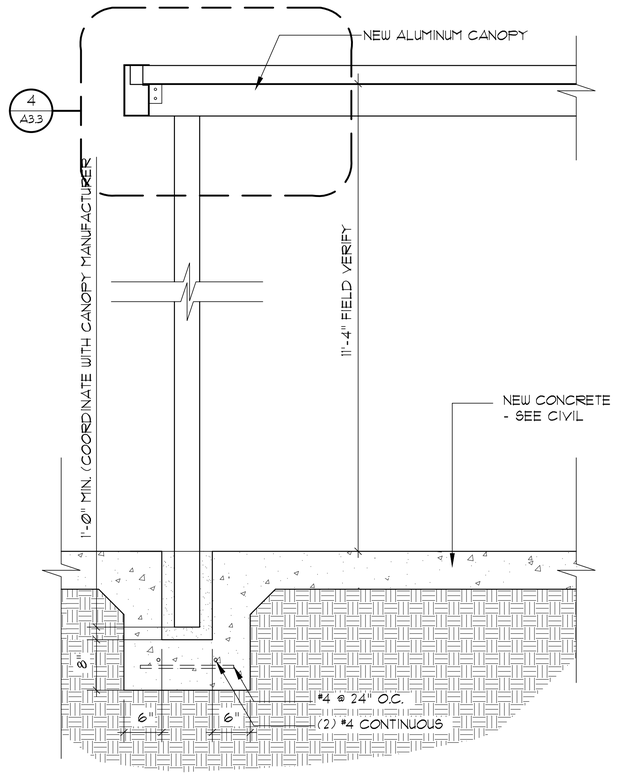

6 A3.3 **CANOPY FOOTING DETAIL**
SCALE: 1" = 1'-0"

FILE NAME

SEAY SEAY & LITCHFIELD
1115 South Court Street
Montgomery, AL 36104
(334) 263-5162

Owner:
The Armory Commission of Alabama
1720 Cong WL Dickinson Drive
Montgomery, AL 36109

SS&L Job Number
14057

IFB Job Number
AC-22-B-0004-S

Date
JANUARY 2022

Drawn By
CM, SS, TS, DC

Checked By
WRO

Revised
-

Project Title
NORTHPORT
FMS #9 RENOVATIONS
NORTHPORT, AL

Sheet Title
DETAILS

Sheet Number
A3.3

STATE OF ALABAMA
MONTGOMERY
Jim H. Seay, Jr. 1846
Gregory A. O'Neal 6043
Wesley R. Osmer 6244
ALABAMA
REGISTERED ARCHITECTS

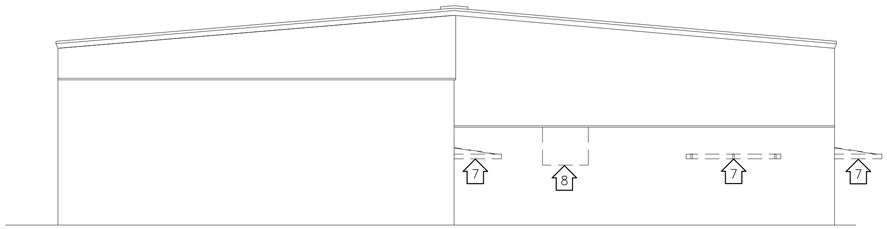

1 / A4.1 **EXISTING SOUTH ELEVATION**

SCALE: 1/8"=1'-Ø"

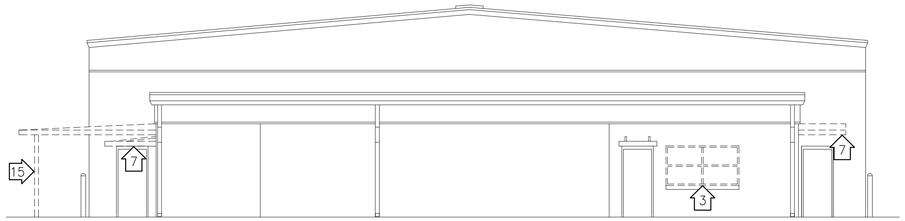

2 / A4.1 **EXISTING NORTH ELEVATION**

SCALE: 1/8"=1'-Ø"

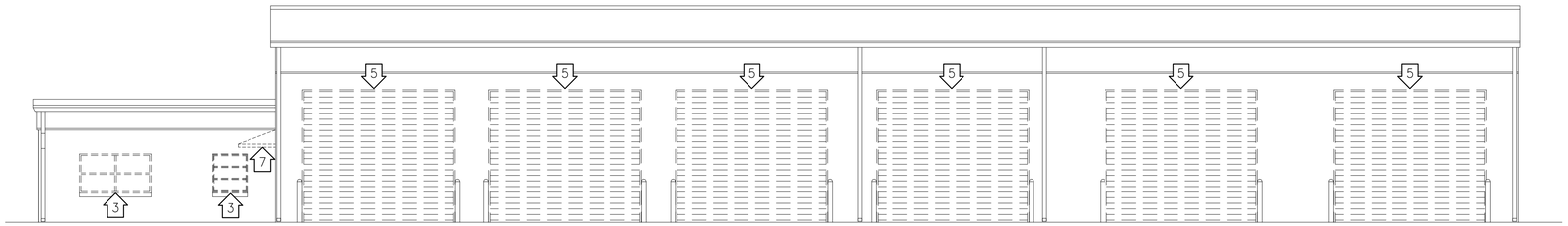

3 / A4.1 **EXISTING WEST ELEVATION**

SCALE: 1/8"=1'-Ø"

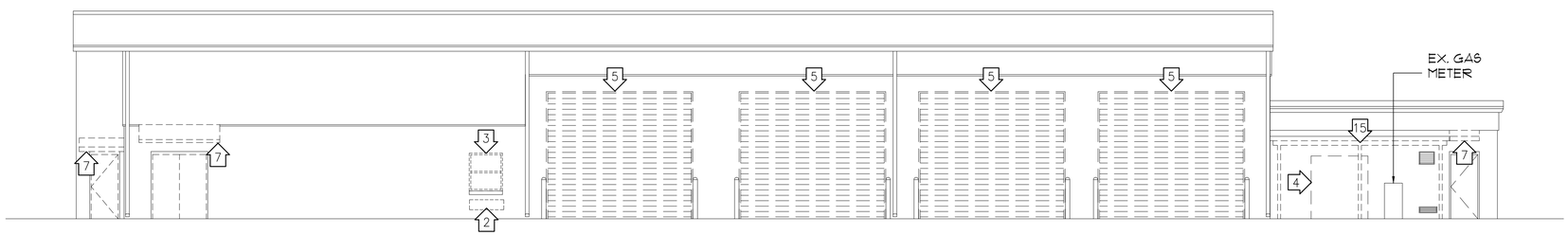

4 / A4.1 **EXISTING EAST ELEVATION**

SCALE: 1/8"=1'-Ø"

NOTES

REFER TO A1.Ø FOR DEMOLITION AND SPECIFIC DEMOLITION NOTES THAT APPLY.

GRAPHIC SCALE

0 4 8 16 24

1/8" = 1'-Ø"

SEAY SEAY & LITCHFIELD

1115 South Court Street
Montgomery, AL 36104
(334) 263-5162

Owner:
The Armory Commission of Alabama
1720 Cong WL Dickinson Drive
Montgomery, AL 36109

SS&L Job Number
14257

IFB Job Number
AC-22-B-ØØØ4-S

Date
JANUARY 2022

Drawn By
CMI, SS, TS, DC

Checked By
WRO

Revised
-

Project Title

NORTHPORT
FMS #9 RENOVATIONS
NORTHPORT, AL

Sheet Title

EXISTING ELEVATIONS - DEMOLITION

Sheet Number

A4.1

STATE OF ALABAMA
MONTGOMERY
Jim H. Seay, Jr.
1846
Gregory A. O'Neal
6043
Wesley R. Osmer
6244
REGISTERED ARCHITECTS

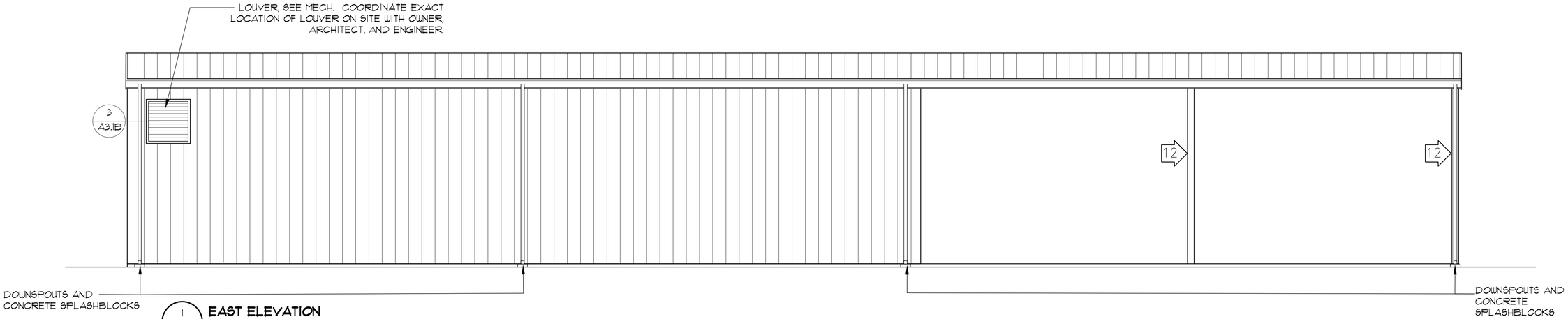

1 A4.1B **EAST ELEVATION**
SCALE: 1/4"=1'-0"

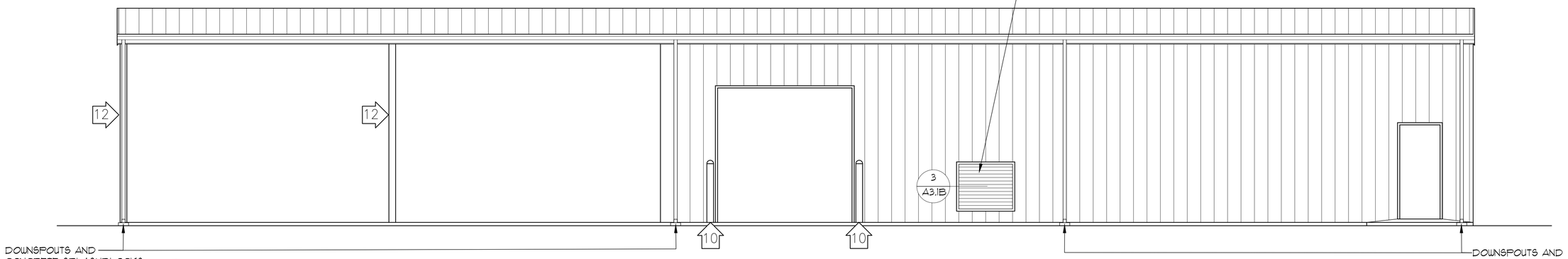

2 A4.1B **WEST ELEVATION**
SCALE: 1/4"=1'-0"

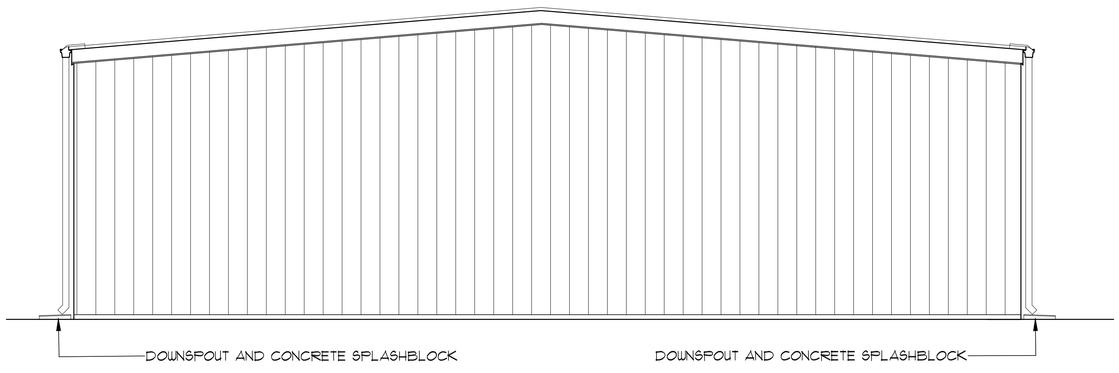

3 A4.1B **SOUTH ELEVATION**
SCALE: 1/4"=1'-0"

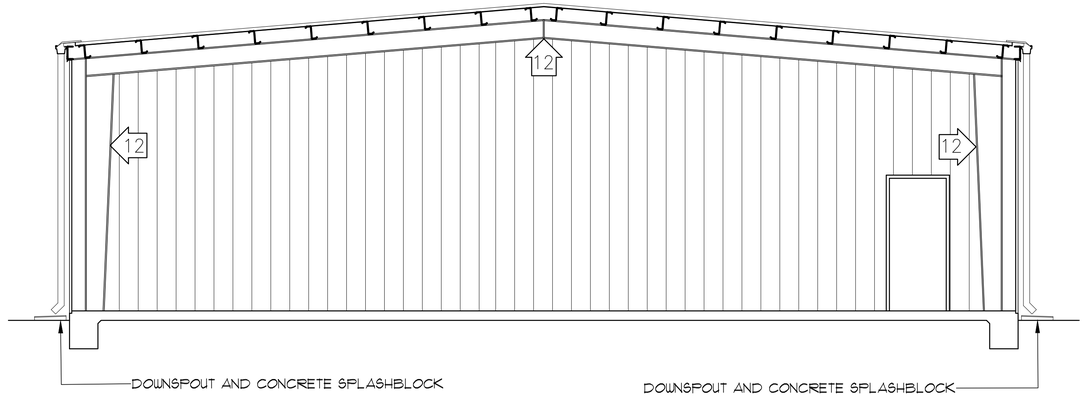

4 A4.1B **NORTH SECTION / ELEVATION**
SCALE: 1/4"=1'-0"

FILE NAME

SEAY SEAY & LITCHFIELD
1115 South Court Street
Montgomery, AL 36104
(334) 263-5162

Owner:
The Armory Commission of Alabama
1720 Cong Wl. Dickinson Drive
Montgomery, AL 36109

SS&L Job Number
14057

IFB Job Number
AC-22-B-0004-S

Date
JANUARY 2022

Drawn By
CMI, SS, TS, DC

Checked By
WRO

Revised
-

Project Title
NORTHPORT
FMS #9 RENOVATIONS
NORTHPORT, AL

Sheet Title
NEW STORAGE BUILDING
ELEVATIONS

Sheet Number
A4.1B

STATE OF ALABAMA
MONTGOMERY
Jim H. Seay, Jr.
1996
Gregory A. O'Neal
6043
Wesley R. Osmer
6244
REGISTERED ARCHITECTS

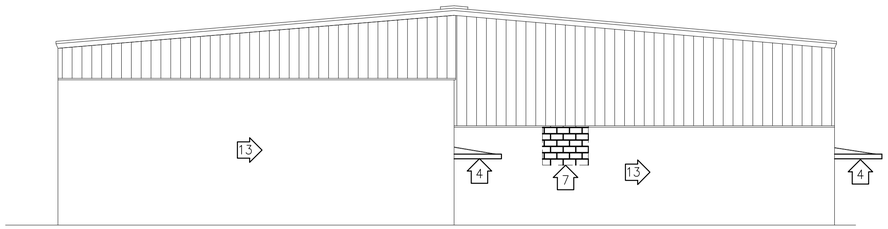

1 / A4.2 **NEW SOUTH ELEVATION**
SCALE: 1/8"=1'-Ø"

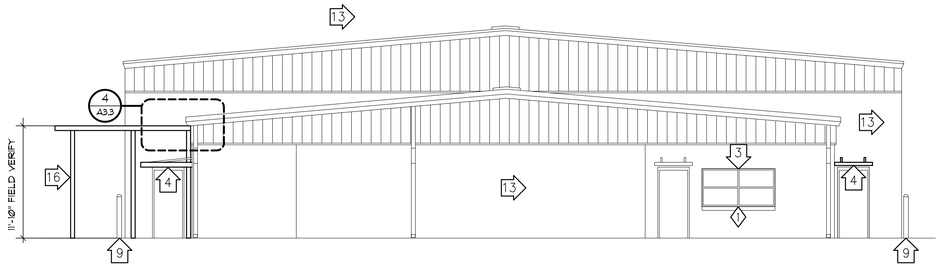

2 / A4.2 **NEW NORTH ELEVATION**
SCALE: 1/8"=1'-Ø"

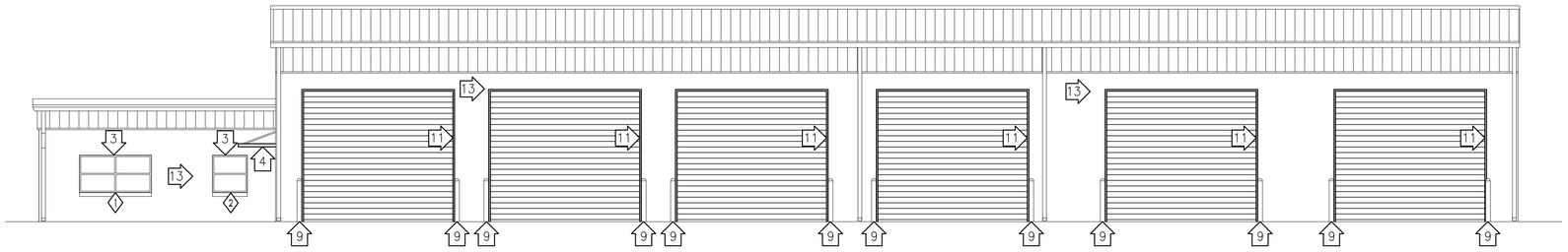

3 / A4.2 **NEW WEST ELEVATION**
SCALE: 1/8"=1'-Ø"

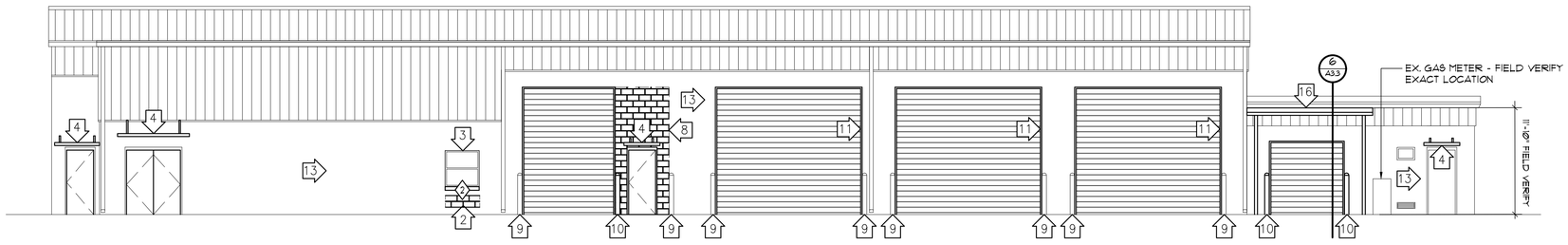

4 / A4.2 **NEW EAST ELEVATION**
SCALE: 1/8"=1'-Ø"

NOTES

REFER TO A1.Ø FOR ALL GENERAL AND SPECIFIC NOTES THAT APPLY.

GRAPHIC SCALE

Ø 4 8 16 24

1/8" = 1'-Ø"

SEAY SEAY & LITCHFIELD
1115 South Court Street
Montgomery, AL 36104
(334) 263-5162

Owner:
The Armory Commission of Alabama
1720 Cong WL Dickinson Drive
Montgomery, AL 36109

SS&L Job Number
14057

IFB Job Number
AC-22-B-ØØØ4-S

Date
JANUARY 2022

Drawn By
CMI, SS, TS, DC

Checked By
WRO

Revised
-

Project Title
NORTHPORT
FMS #9 RENOVATIONS
NORTHPORT, AL

Sheet Title
NEW ELEVATIONS

Sheet Number
A4.2

STATE OF ALABAMA
MONTGOMERY
Jim H. Seay, Jr.
1946
Gregory A. O'Neal
4043
Wesley R. Osmer
4244
ALABAMA
REGISTERED ARCHITECTS

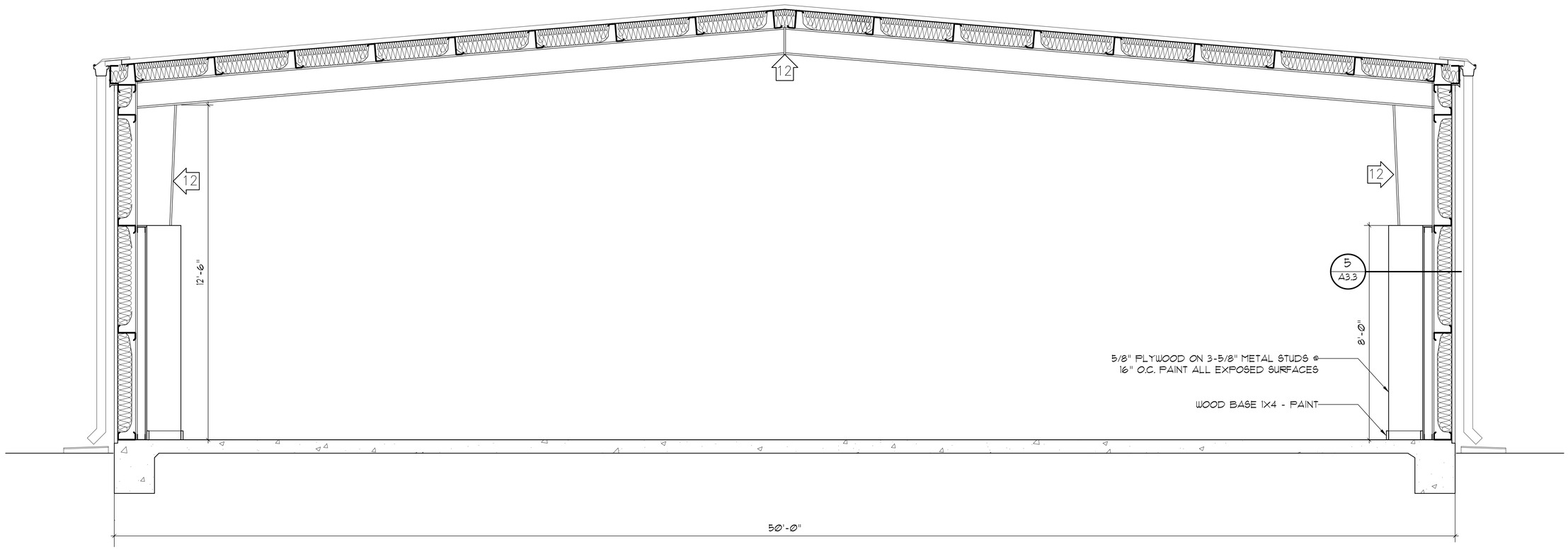

1 A5.1B **BUILDING SECTION**
SCALE: 1/2"=1'-0"

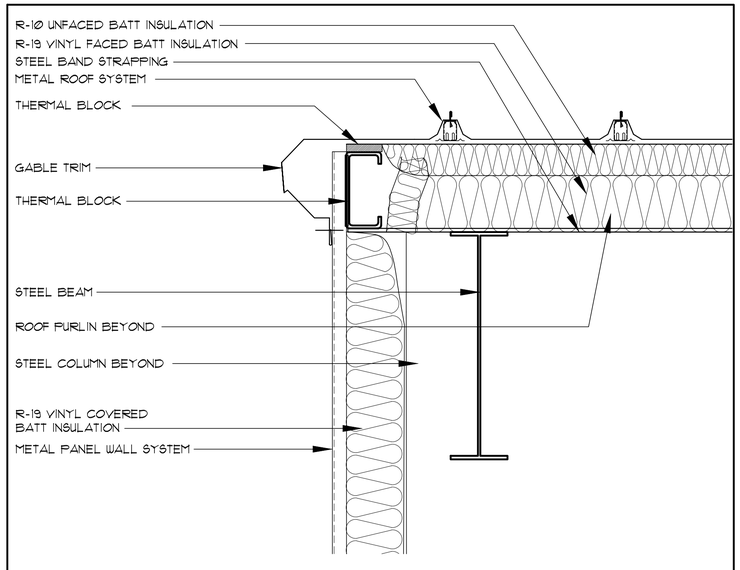

2 A5.1B **END WALL DETAIL**
SCALE: 1 1/2"=1'-0"

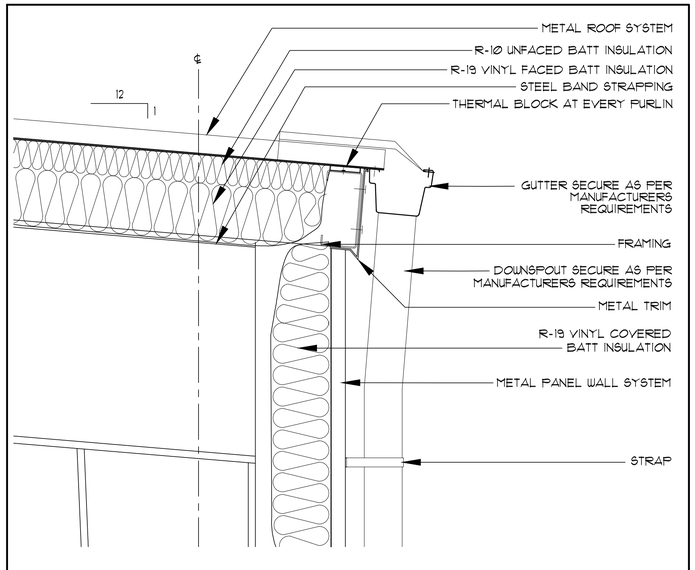

3 A5.1B **EAVE DETAIL**
SCALE: 1 1/2"=1'-0"

SEAY SEAY & LITCHFIELD
1115 South Court Street
Montgomery, AL 36104
(334) 263-5162

Owner:
The Armory Commission of Alabama
1720 Cong Wl. Dickinson Drive
Montgomery, AL 36109

SS&L Job Number
14057

IFB Job Number
AC-22-B-0004-S

Date
JANUARY 2022

Drawn By
CMI, SS, TS, DC

Checked By
WRO

Revised
-

Project Title
NORTHPORT
FMS #9 RENOVATIONS
NORTHPORT, AL

Sheet Title
NEW STORAGE
BUILDING - SECTION &
DETAILS

Sheet Number
A5.1B

STATE OF ALABAMA
MONTGOMERY
Jim H. Seay, Jr.
1846
Gregory A. O'Neal
6043
Wesley R. Osmer
6244
ALABAMA
REGISTERED ARCHITECTS

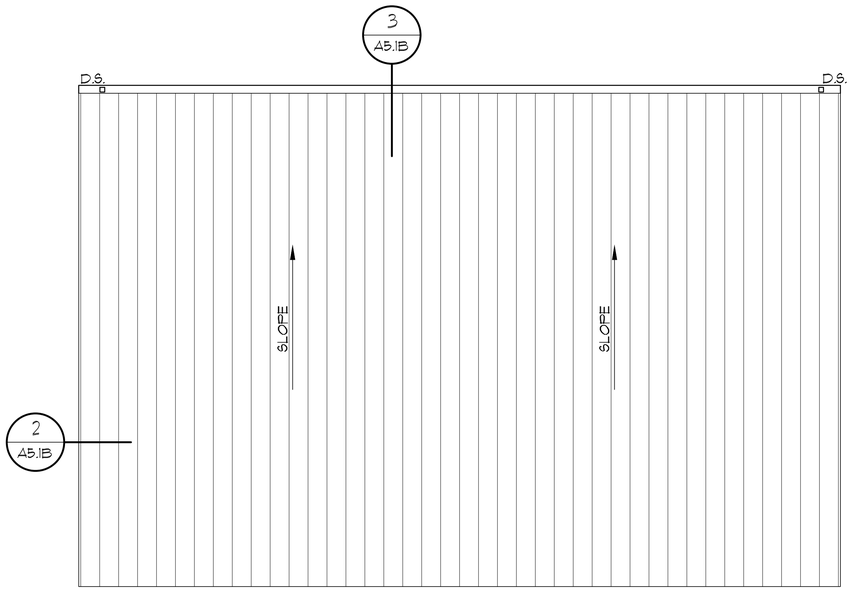

1 A5.1C **NEW WASH RACK SECTION**

SCALE: 1/4"=1'-Ø"

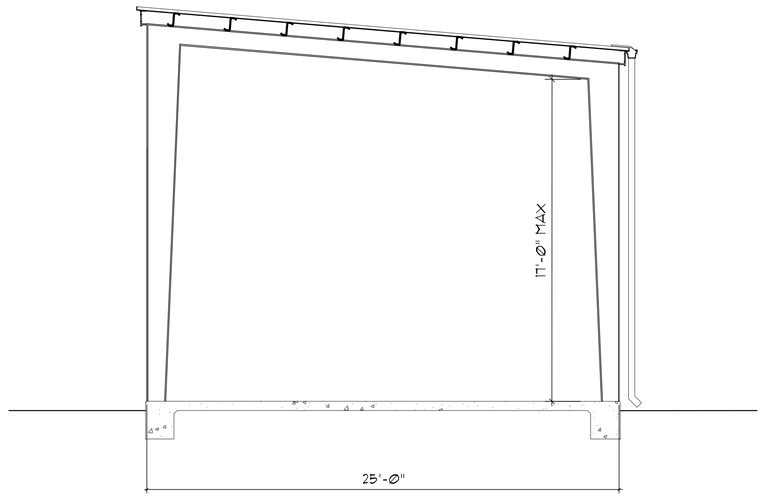

2 A5.1C **NEW WASH RACK SECTION**

SCALE: 1/4"=1'-Ø"

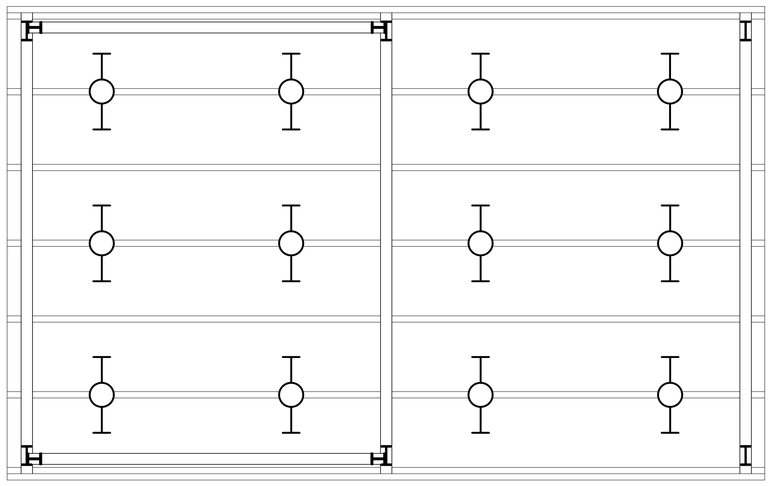

3 A5.1C **NEW WASH RACK REFLECTED CEILING PLAN**

SCALE: 1/4"=1'-Ø"

GENERAL NOTES

1.) PAINT ALL EXPOSED STRUCTURAL MEMBERS INCLUDING COLUMNS, ROOF FRAMING, AND PURLINS.

2.) REFER TO A1Ø FOR ALL GENERAL AND SPECIFIC NOTES THAT APPLY.

LEGEND

ROOM 100	ROOM NAME AND NUMBER		NEW PENDANT LINEAR LIGHT FIXTURE - SEE ELECTRICAL
X / XX	DETAIL	D.S.	DOWNSPOUTS
4	SPECIFIC NOTES.	NOTE: THE CONTRACTOR SHALL VERIFY ALL EXISTING CONDITIONS AND DIMENSIONS.	

SEAY SEAY & LITCHFIELD

1115 South Court Street
Montgomery, AL 36104
(334) 263-5162

Owner:
The Armory Commission of Alabama
1720 Cong WL Dickinson Drive
Montgomery, AL 36109

SS&L Job Number
14057

IFB Job Number
AC-22-B-ØØØ4-S

Date
JANUARY 2022

Drawn By
CM, SS, TS, DC

Checked By
WRO

Revised
-

Project Title

NORTHPORT
FMS #9 RENOVATIONS
NORTHPORT, AL

Sheet Title

NEW WASH RACK -
ROOF PLAN & SECTION

Sheet Number

A5.1C

STATE OF ALABAMA
MONTGOMERY
Jim H. Seay, Jr.
1946
Gregory A. O'Neal
6043
Wesley E. Osmer
6244
ALABAMA
REGISTERED ARCHITECTS

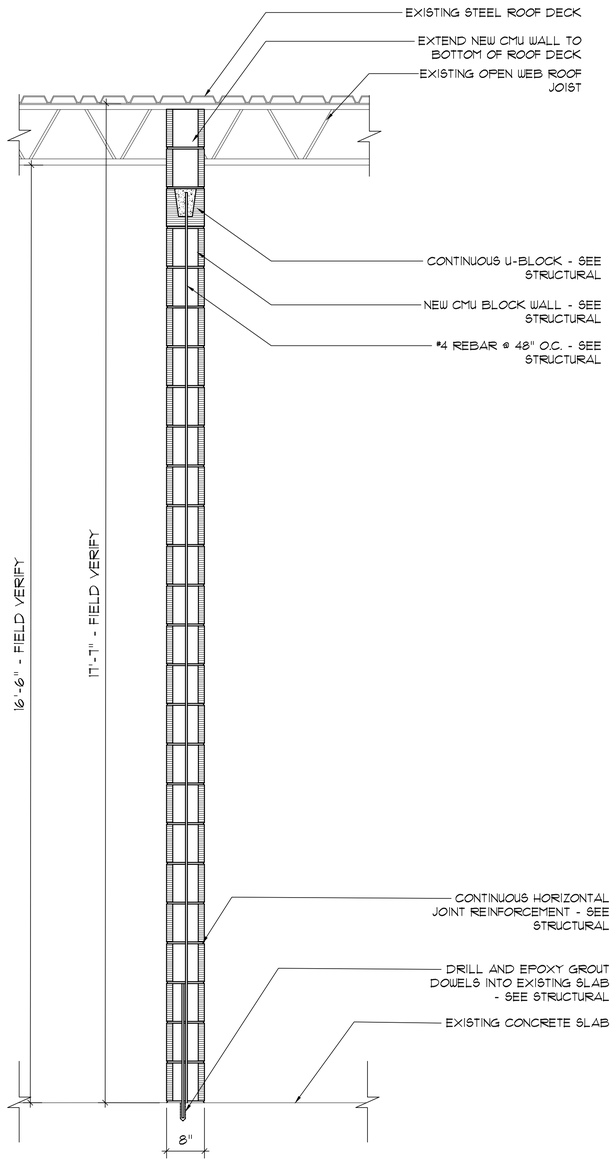

1 A5.2 **WALL SECTION**
SCALE: 3/4"=1'-0"

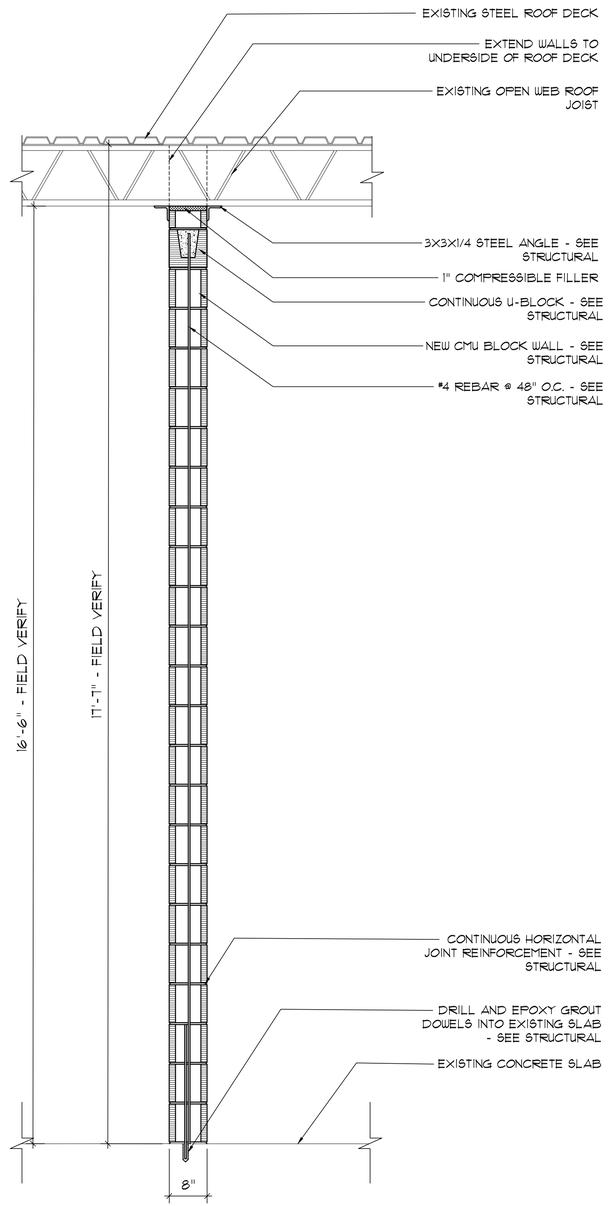

2 A5.2 **WALL SECTION**
SCALE: 3/4"=1'-0"

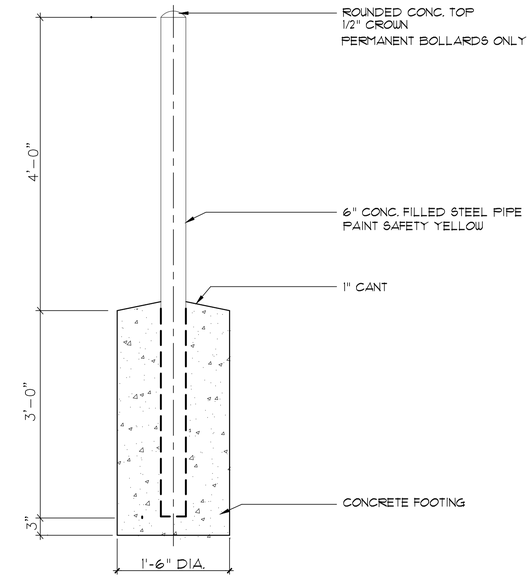

3 A5.2 **BOLLARD DETAIL**
SCALE: 3/4"=1'-0"

SEAY SEAY & LITCHFIELD
1115 South Court Street
Montgomery, AL 36104
(334) 263-5162

Owner:
The Armory Commission of Alabama
1720 Cong WL Dickinson Drive
Montgomery, AL 36109

SS&L Job Number
14057

IFB Job Number
AC-22-B-0004-S

Date
JANUARY 2022

Drawn By
CM, SS, TS, DC

Checked By
WRO

Revised
-

Project Title
NORTHPORT
FMS #9 RENOVATIONS
NORTHPORT, AL

Sheet Title
DETAIL SECTIONS

Sheet Number
A5.2

STATE OF ALABAMA
MONTGOMERY
Jim H. Seay, Jr. #
1846
Gregory A. O'Neal
6043
Wesley R. Osmer
6044
ALABAMA
REGISTERED ARCHITECTS

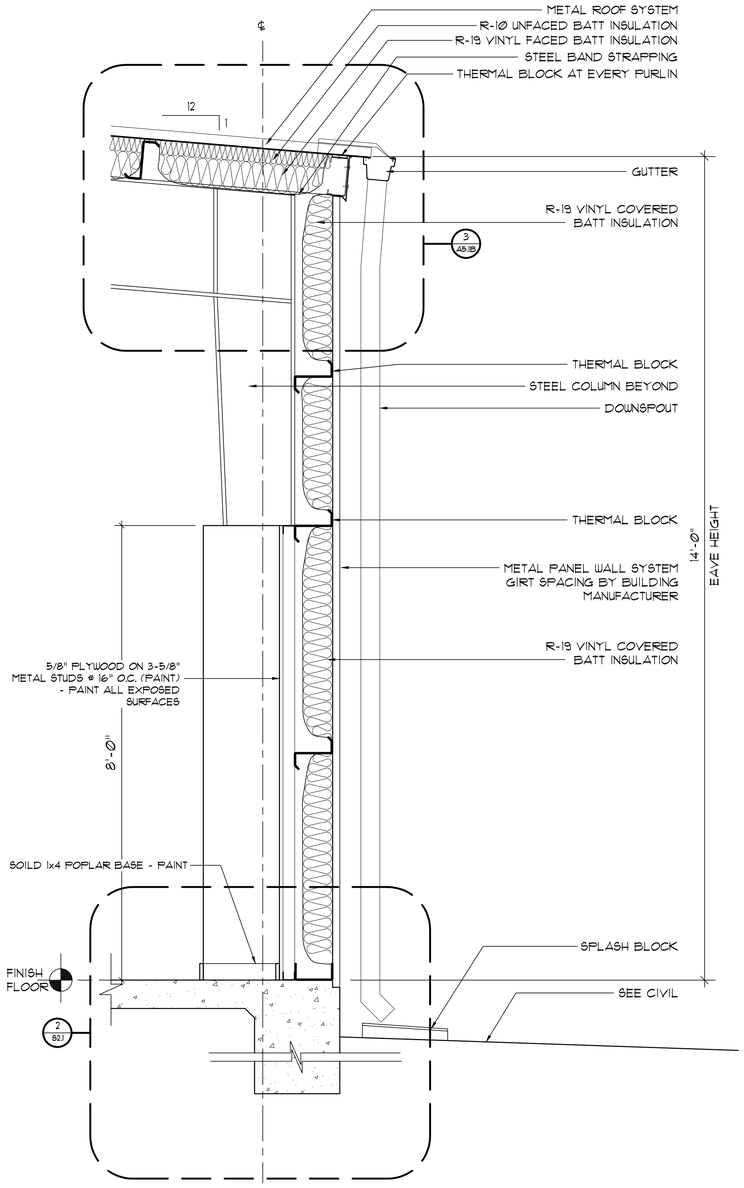

1 A5.2B **WALL SECTION**
SCALE: 3/4"=1'-0"

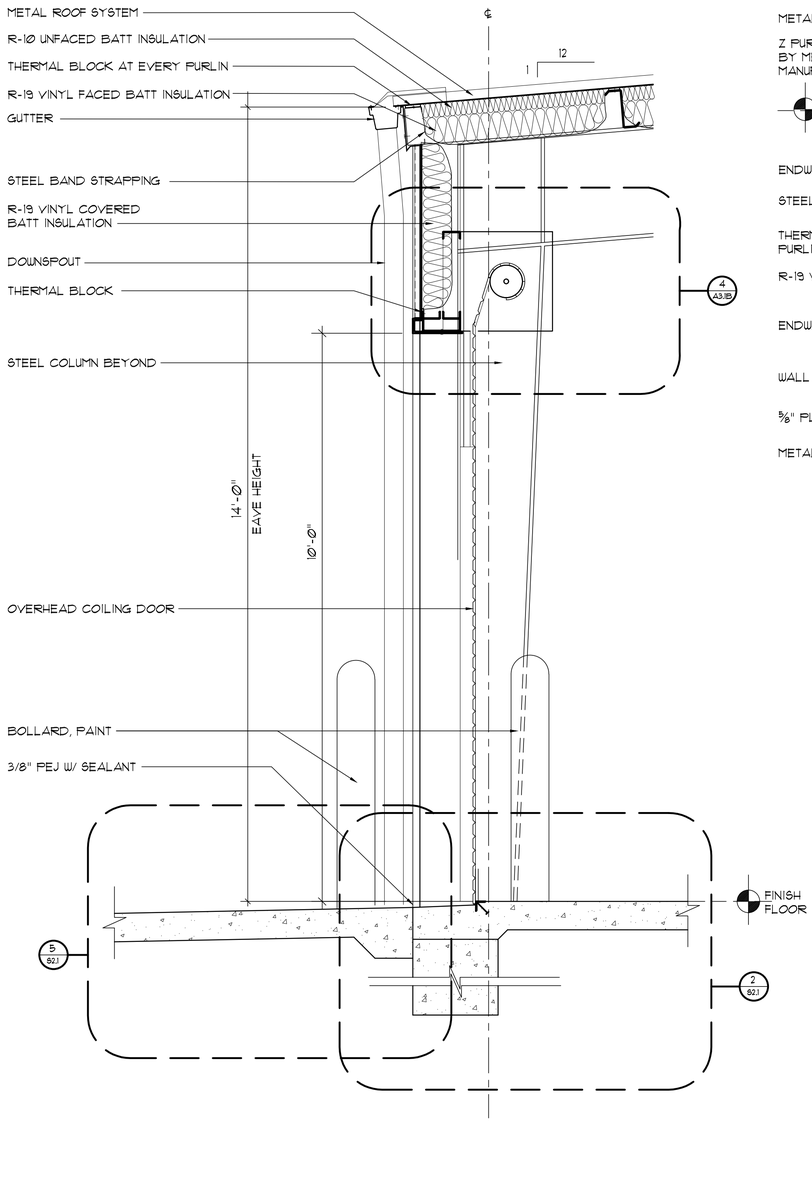

2 A5.2B **WALL SECTION**
SCALE: 3/4"=1'-0"

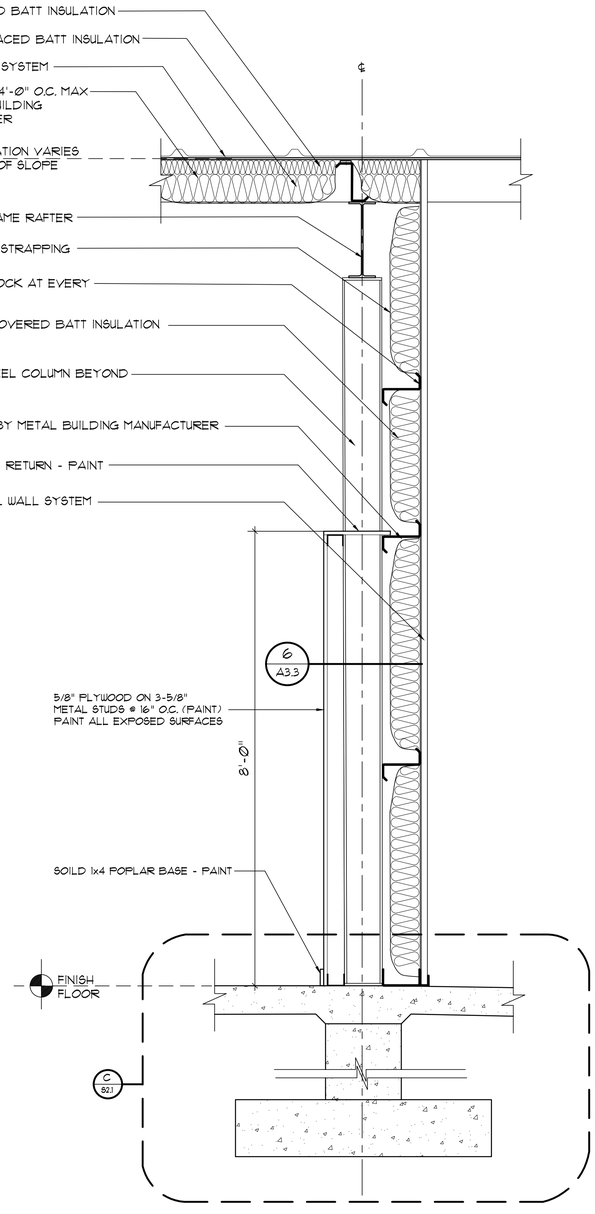

3 A5.2B **WALL SECTION**
SCALE: 3/4"=1'-0"

SEAY SEAY & LITCHFIELD
1115 South Court Street
Montgomery, AL 36104
(334) 263-5162

Owner:
The Armory Commission of Alabama
1720 Cong WL Dickinson Drive
Montgomery, AL 36109

SS&L Job Number
14057

IFB Job Number
AC-22-B-0004-S

Date
JANUARY 2022

Drawn By
CMI, SS, TS, DC

Checked By
WRO

Revised
-

Project Title
NORTHPORT
FMS #9 RENOVATIONS
NORTHPORT, AL

Sheet Title
WALL SECTIONS - NEW STORAGE BUILDING

Sheet Number
A5.2B

STATE OF ALABAMA
MONTGOMERY
Jim H. Seay, Jr.
1966
Gregory A. O'Neal
6043
Wesley K. Osmer
11244
ALABAMA
REGISTERED ARCHITECTS

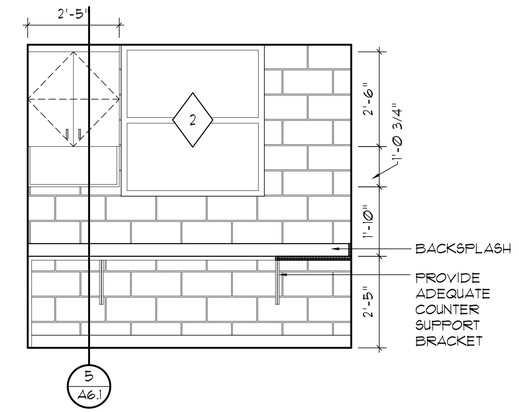

1 A6.1 **REAR OFFICE 109 EAST INTERIOR ELEVATION**

SCALE: 1/2"=1'-Ø"

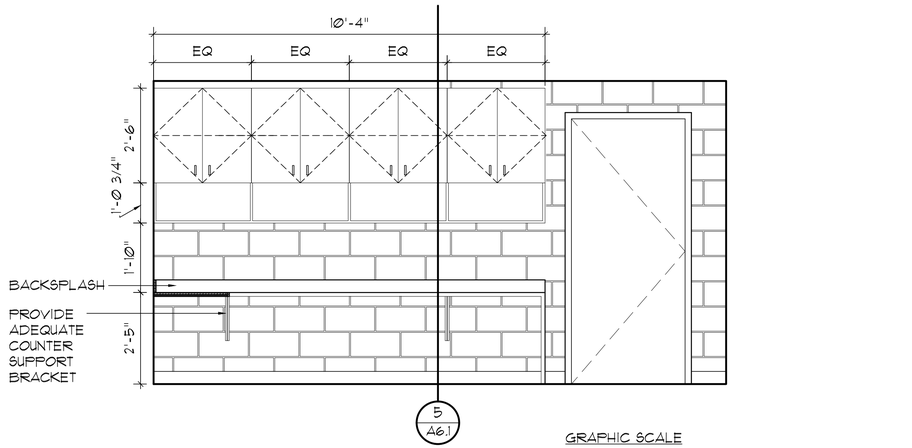

2 A6.1 **REAR OFFICE 109 SOUTH INTERIOR ELEVATION**

SCALE: 1/2"=1'-Ø"

GRAPHIC SCALE

Ø 1 3 6 9

1/2" = 1'-Ø"

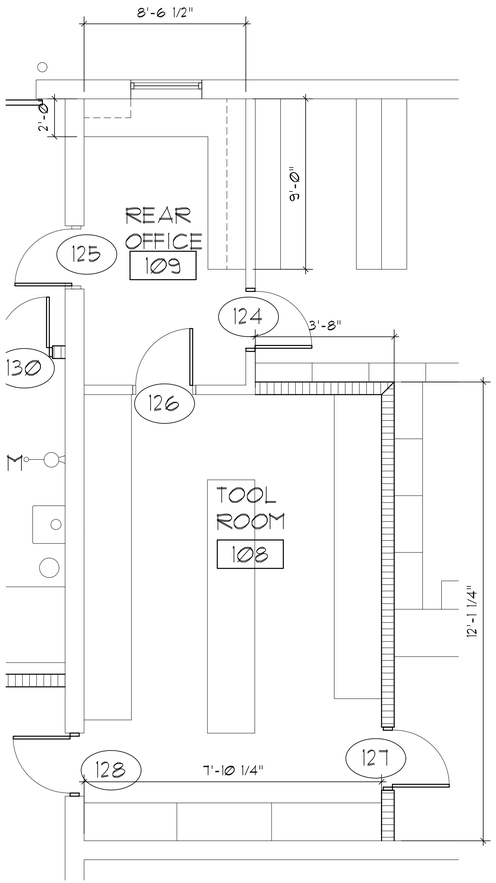

3 A6.1 **ENLARGED FLOOR PLAN**

SCALE: 1/4"=1'-Ø"

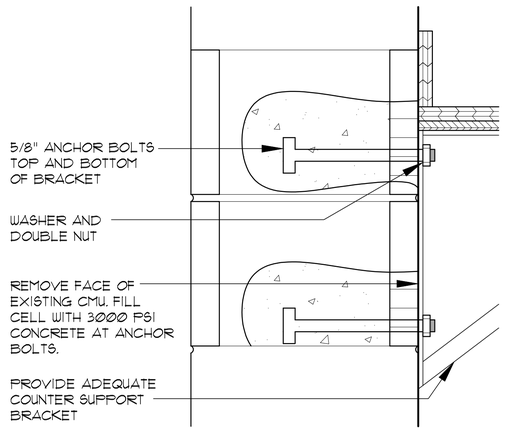

4 A6.1 **ANCHOR BOLT DETAIL**

SCALE: 3"=1'-Ø"

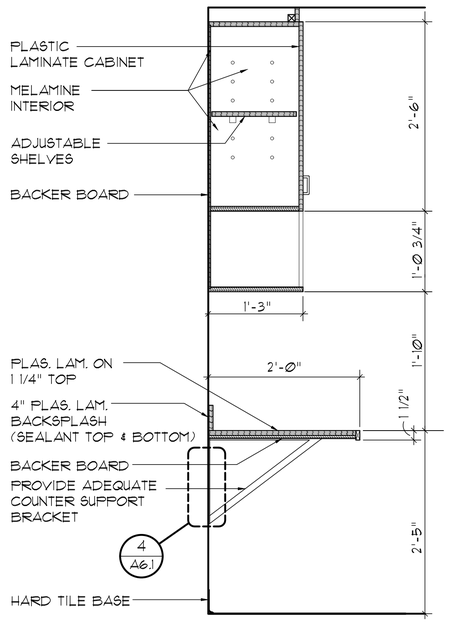

5 A6.1 **TYPICAL CABINETRY SECTION**

SCALE: 1"=1'-Ø"

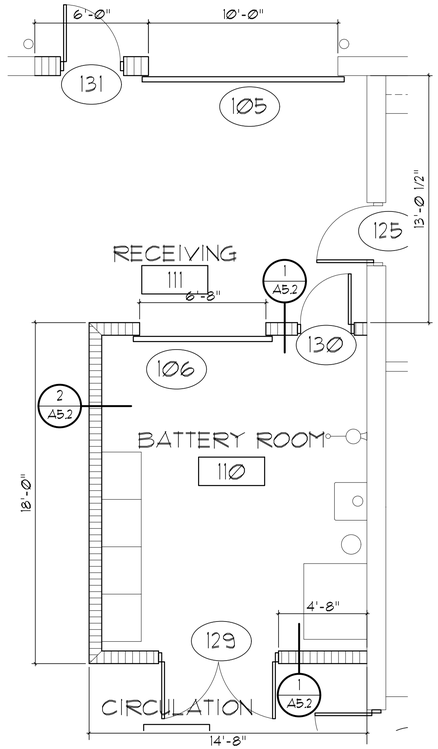

6 A6.1 **BATTERY ROOM ENLARGED FLOOR PLAN**

SCALE: 1/2"=1'-Ø"

SEAY SEAY & LITCHFIELD

1115 South Court Street
Montgomery, AL 36104
(334) 263-5162

Owner:
The Armory Commission of Alabama
1720 Cong WL Dickinson Drive
Montgomery, AL 36109

SS&L Job Number
14057

IFB Job Number
AC-22-B-0004-S

Date
JANUARY 2022

Drawn By
CMI, SS, TS, DC

Checked By
WRO

Revised
-

Project Title

NORTHPORT
FMS #9 RENOVATIONS
NORTHPORT, AL

Sheet Title

ENLARGED PLANS,
ELEVATIONS, AND DETAILS

Sheet Number

A6.1

STATE OF ALABAMA
MONTGOMERY
Jim H. Seay, Jr.
1846
Gregory A. O'Neal
4043
Wesley R. Osmer
4244
ALABAMA
REGISTERED ARCHITECTS

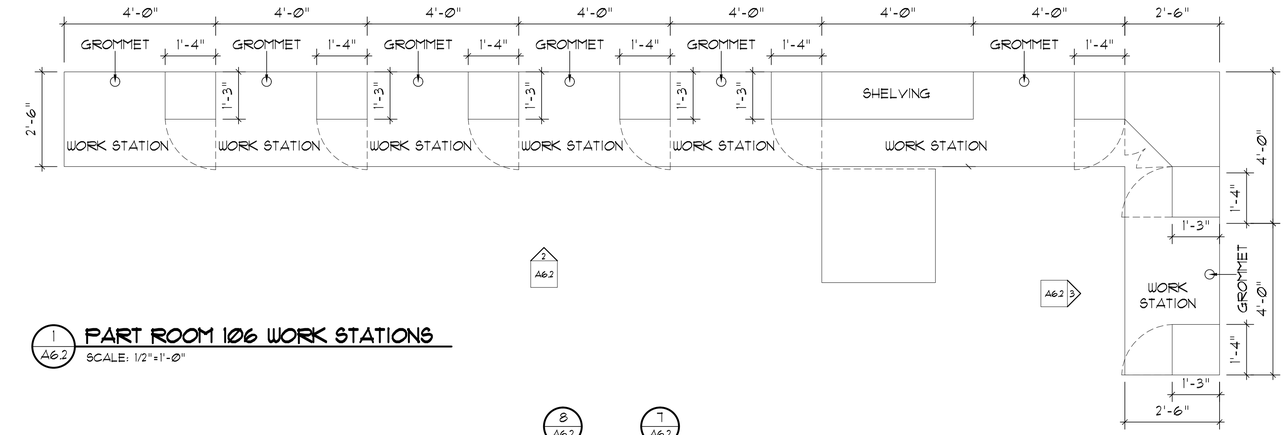

1 A6.2 **PART ROOM 106 WORK STATIONS**
SCALE: 1/2"=1'-0"

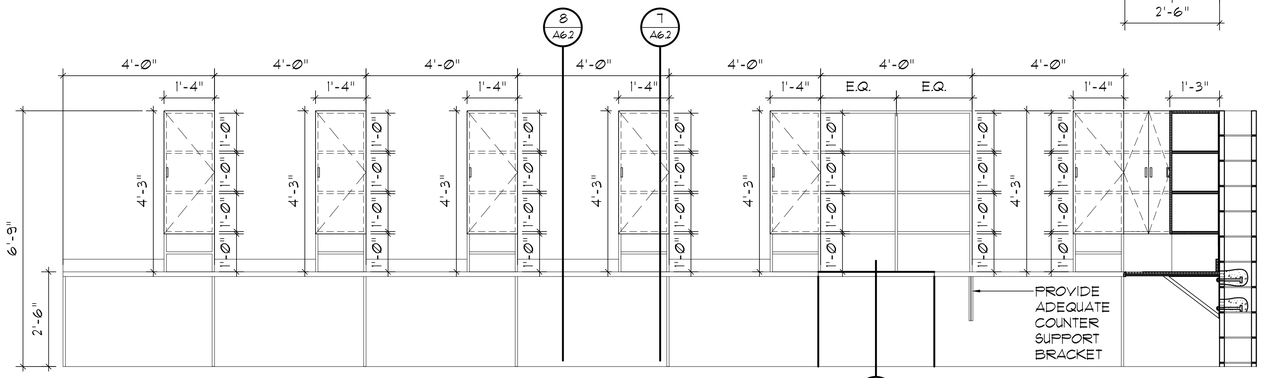

2 A6.2 **ELEVATION**
SCALE: 1/2"=1'-0"

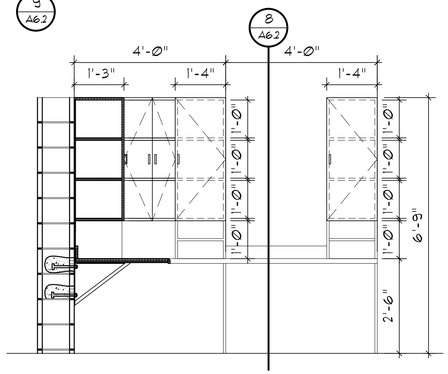

3 A6.2 **ELEVATION**
SCALE: 1/2"=1'-0"

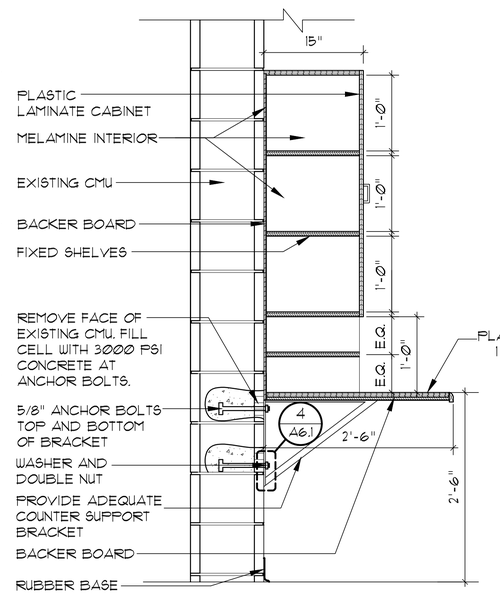

7 A6.2 **SECTION**
SCALE: 1"=1'-0"

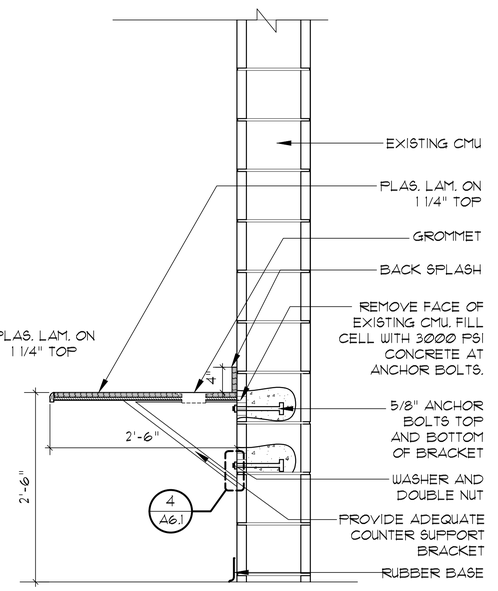

8 A6.2 **SECTION**
SCALE: 1"=1'-0"

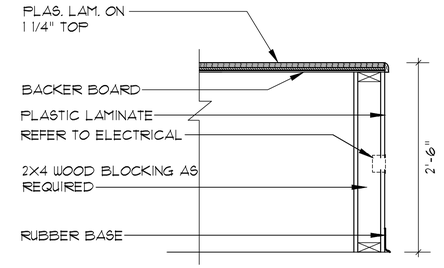

9 A6.2 **SECTION**
SCALE: 1"=1'-0"

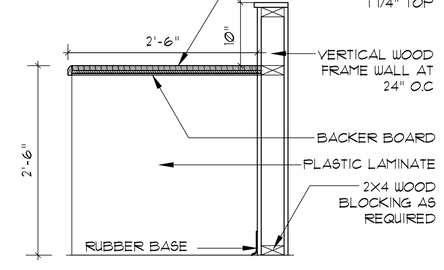

10 A6.2 **SECTION**
SCALE: 1"=1'-0"

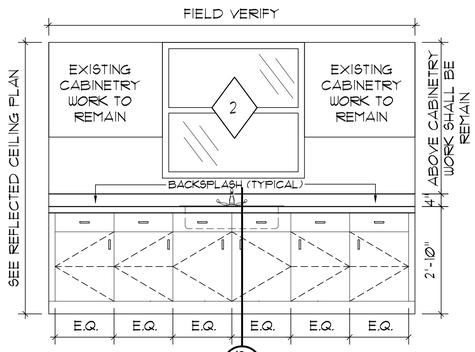

11 A6.2 **ELEVATION**
SCALE: 1/2"=1'-0"

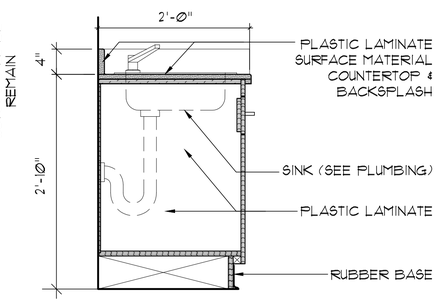

12 A6.2 **SECTION**
SCALE: 1"=1'-0"

SEAY SEAY & LITCHFIELD
1115 South Court Street
Montgomery, AL 36104
(334) 263-5162

Owner:
The Armory Commission of Alabama
1720 Cong WL Dickinson Drive
Montgomery, AL 36109

SS&L Job Number
14057

IFB Job Number
AC-22-B-0004-S

Date
JANUARY 2022

Drawn By
CMI, SS, TS, DC

Checked By
WRO

Revised
-

Project Title
NORTHPORT
FMS #9 RENOVATIONS
NORTHPORT, AL

Sheet Title
ENLARGED PLANS, ELEVATIONS, AND DETAILS

Sheet Number
A6.2

STATE OF ALABAMA
MONTGOMERY
Jim H. Seay, Jr.
1846
Gregory A. O'Neal
10143
Wesley R. Osmer
10144
ALABAMA
REGISTERED ARCHITECTS

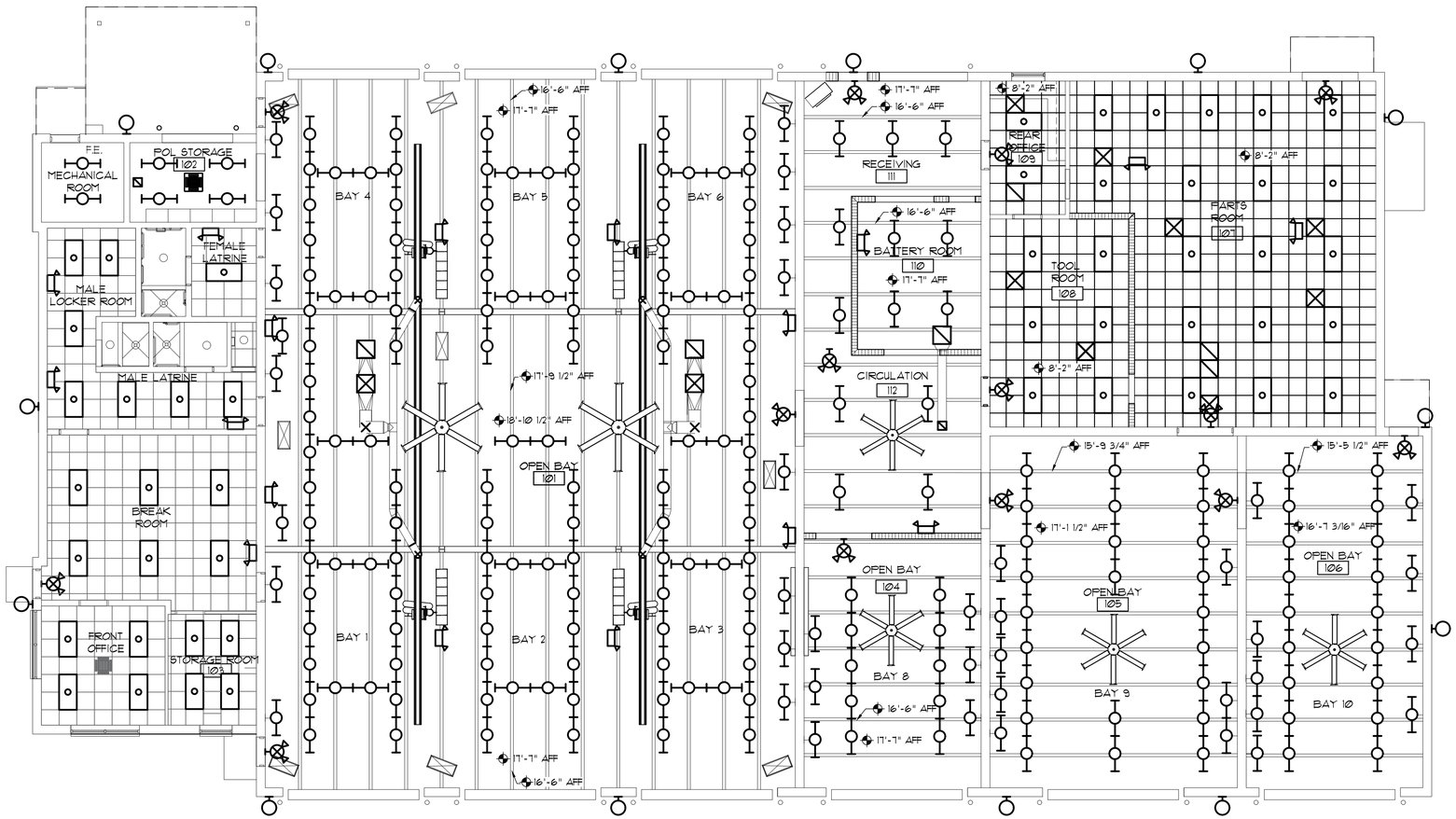

1 / A8.1 REFLECTED CEILING PLAN

SCALE: 1/8"=1'-0"

GRAPHIC SCALE

0 4 8 16 24

1/8" = 1'-0"

LEGEND

- ROOM 100 — ROOM NAME AND NUMBER
- 4 — SPECIFIC NOTES.
- X / XX — DETAIL
- 2X4 LIGHT FIXTURE
- SUPPLY DIFFUSER
- RETURN DIFFUSER
- ACT 1
- NEW FAN - SEE MECHANICAL
- NEW GAS INFRARED HEATER
- RELOCATED EXISTING GAS INFRARED HEATER
- EXIT / COMBO EGRESS LIGHTS - SEE ELECTRICAL
- EXISTING TO REMAIN RECESSED LIGHTING FIXTURE - SEE ELECTRICAL
- CEILING MOUNTED ELECTRIC HEATER - SEE MECHANICAL
- NEW PENDANT LINEAR LIGHT FIXTURE - SEE ELECTRICAL
- NEW WALL MOUNTED FIXTURE - SEE ELECTRICAL
- NEW WALL MOUNTED LINEAR LIGHT FIXTURE - SEE ELECTRICAL

NOTE: THE CONTRACTOR SHALL VERIFY ALL EXISTING CONDITIONS AND DIMENSIONS.

SEAY SEAY & LITCHFIELD
1115 South Court Street
Montgomery, AL 36104
(334) 263-5162

Owner:
The Armory Commission of Alabama
1720 Cong WL Dickinson Drive
Montgomery, AL 36109

SS&L Job Number
14057

IFB Job Number
AC-22-B-0004-S

Date
JANUARY 2022

Drawn By
CMI, SS, TS, DC

Checked By
WRO

Revised
-

Project Title
NORTHPORT
FMS #9 RENOVATIONS
NORTHPORT, AL

Sheet Title
REFLECTED CEILING PLAN
– MAINTENANCE SHOP

Sheet Number
A8.1

STATE OF ALABAMA
MONTGOMERY
Jim H. Seay, Jr.
1846
Gregory A. O'Neal
6043
Wesley R. Osmer
6344
ALABAMA
REGISTERED ARCHITECTS

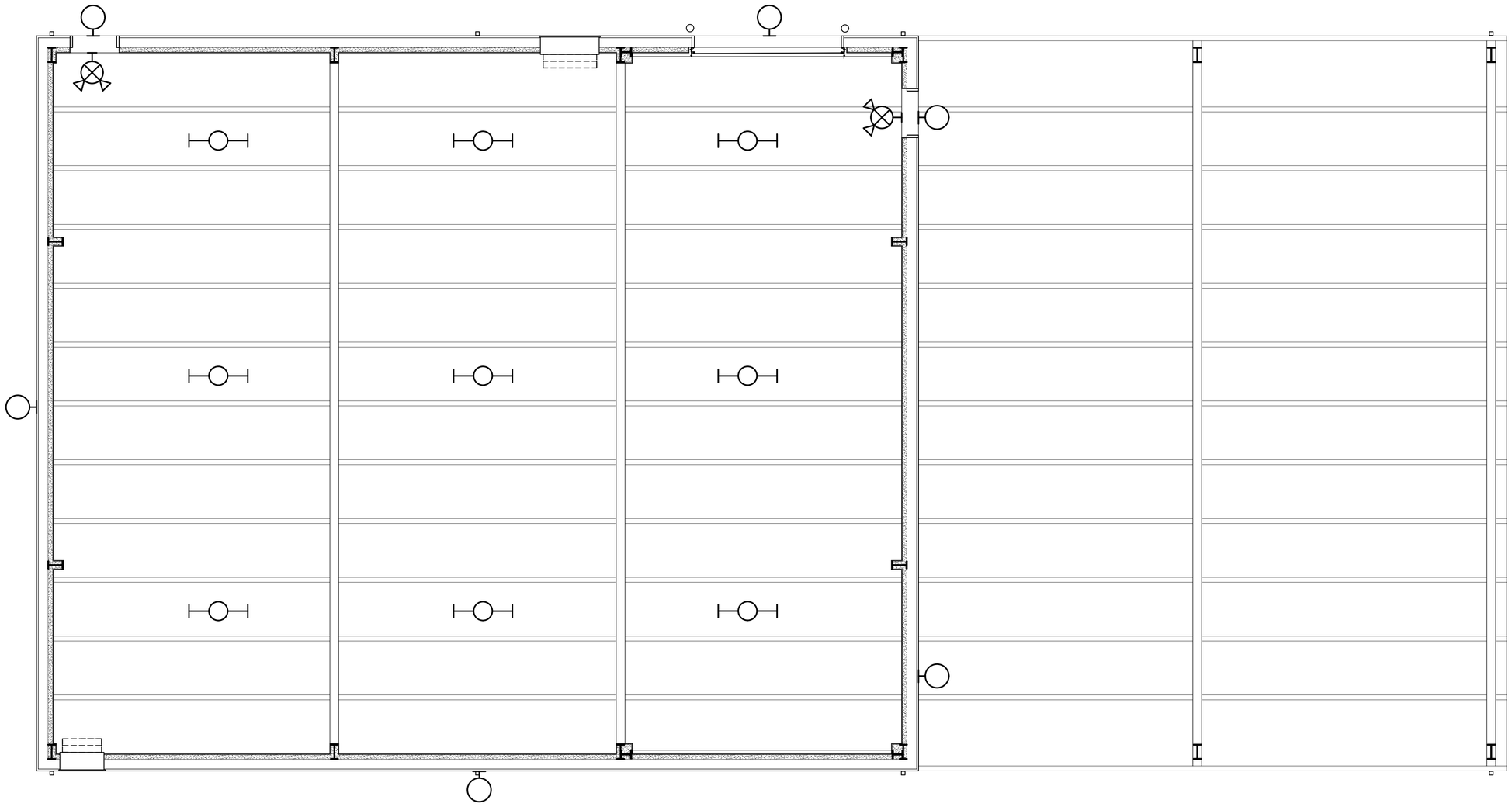

1
A8.1B

REFLECTED CEILING PLAN - NEW STORAGE BUILDING

SCALE: 1/4"=1'-0"

GRAPHIC SCALE

0 1 2 4 6 8 10 12

1/4" = 1'-0"

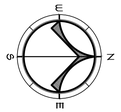

GENERAL NOTES

1.) PAINT ALL EXPOSED STRUCTURAL MEMBERS INCLUDING COLUMNS, ROOF FRAMING, AND PURLINS.

LEGEND

ROOM 100	ROOM NAME AND NUMBER		2X4 LIGHT FIXTURE		NEW PENDANT LINEAR LIGHT FIXTURE - SEE ELECTRICAL
4	SPECIFIC NOTES.		SUPPLY DIFFUSER		NEW WALL MOUNTED FIXTURE - SEE ELECTRICAL
X XX	DETAIL		RETURN DIFFUSER		EXIT / COMBO EGRESS LIGHTS - SEE ELECTRICAL

NOTE: THE CONTRACTOR SHALL VERIFY ALL EXISTING CONDITIONS AND DIMENSIONS.

SEAY SEAY & LITCHFIELD

1115 South Court Street
Montgomery, AL 36104
(334) 263-5162

Owner:
The Armory Commission of Alabama
1720 Cong WL Dickinson Drive
Montgomery, AL 36109

SS&L Job Number
14057

IFB Job Number
AC-22-B-0004-S

Date
JANUARY 2022

Drawn By
CMI, SS, TS, DC

Checked By
WRO

Revised
-

Project Title

NORTHPORT
FMS #9 RENOVATIONS
NORTHPORT, AL

Sheet Title

REFLECTED CEILING PLAN
- NEW STORAGE BUILDING

Sheet Number

A8.1B

STATE OF ALABAMA
MONTGOMERY
Jim H. Seay, Jr.
1846
Gregory A. O'Neal
6043
Wesley R. Osmer
6244
ALABAMA
REGISTERED ARCHITECTS

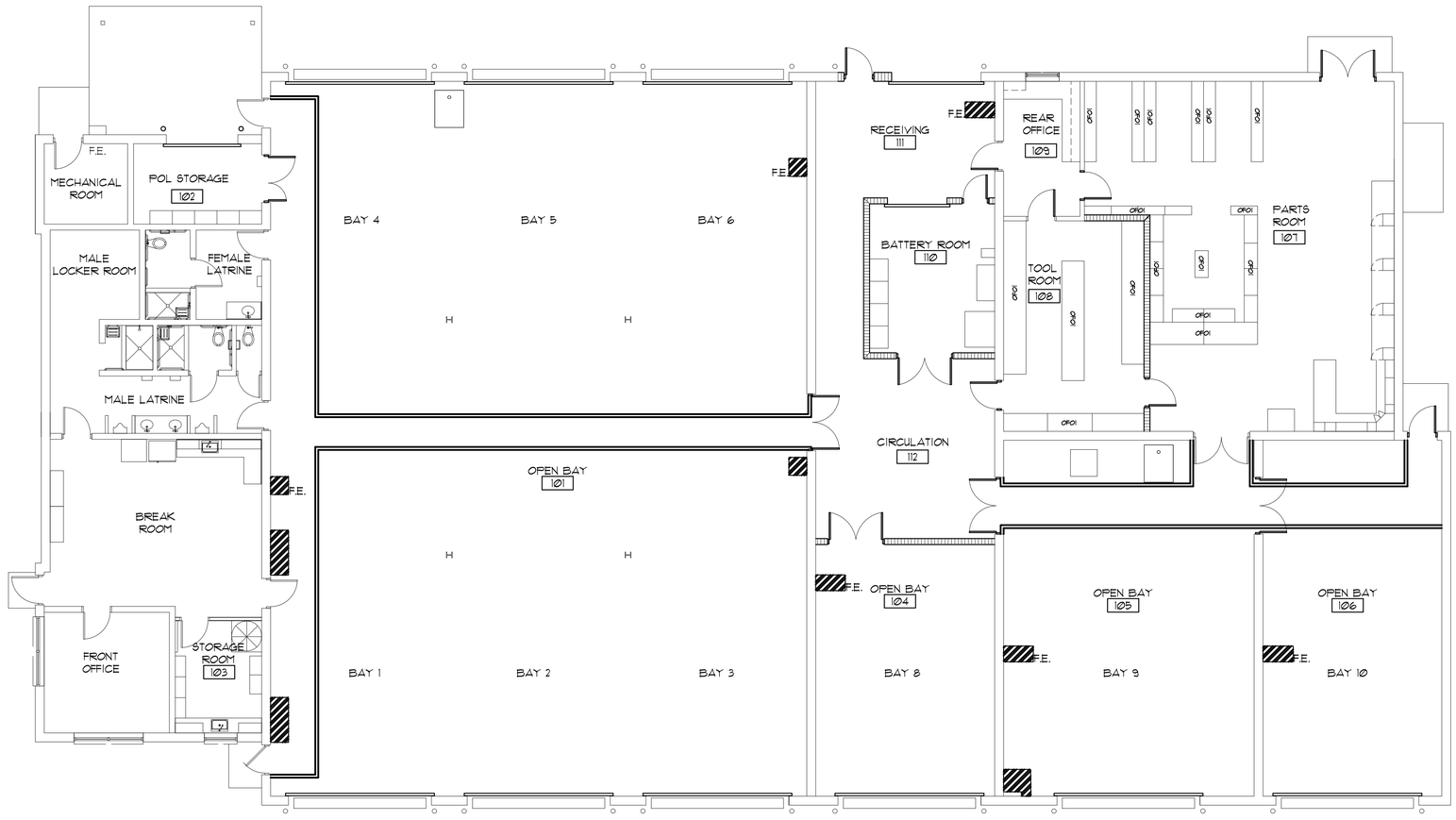

1 / A9.1 NEW FINISH FLOOR PATTERN PLAN- EXISTING MAINTENANCE SHOP

SCALE: 1/8"=1'-0"

GRAPHIC SCALE

0 4 8 16 24

1/8" = 1'-0"

LEGEND

- ROOM 100 — ROOM NAME AND NUMBER
- XXX — DOOR TAG. REFER TO DOOR SCHEDULE
- 4 — SPECIFIC NOTE. REFER TO A1.0
- F.E. — FIRE EXTINGUISHER - NEW PAINT STRIPES
- XXXX — ELEVATION TAG.
- XX / AXXX — WALL SECTION
- X / XX — DETAIL
- X / XXX — BUILDING SECTION
- NEW PAINT STRIPES LINE ON CONCRETE FLOOR

NOTE: THE CONTRACTOR SHALL VERIFY ALL EXISTING CONDITIONS AND DIMENSIONS.

FILE NAME

SEAY SEAY & LITCHFIELD
1115 South Court Street
Montgomery, AL 36104
(334) 283-5162

Owner:
The Armory Commission of Alabama
1720 Cong WL Dickinson Drive
Montgomery, AL 36109

SS&L Job Number
14057

IFB Job Number
AC-22-B-0004-S

Date
JANUARY 2022

Drawn By
CMI, SG, TS, DC

Checked By
WRO

Revised
-

Project Title

NORTHPORT
FMS #9 RENOVATIONS
NORTHPORT, AL

Sheet Title

NEW FINISH FLOOR
PATTERN PLAN

Sheet Number

A9.1

STATE OF ALABAMA
MONTGOMERY
Jim H. Seay, Jr.
1946
Gregory A. O'Neal
4043
Wesley R. Osmer
4244
ALABAMA
REGISTERED ARCHITECTS

PVC PIPE HANGER SPACING GUIDE

PVC PIPE SUPPORTS - SCHEDULE 40

MAXIMUM SUPPORT SPACING (FEET)

NPS (INCHES)	OPERATING TEMPERATURE (°F)		
	60	100	140
1/2	4.5	4	2.5
3/4	5	4	2.5
1	5.5	4.5	2.5
1-1/4	5.5	5	3
1-1/2	6	5	3
2	6	5	3
3	7	6	3.5
4	7.5	6.5	4
6	8.5	7.5	4.5
8	9	8	4.5

PVC PIPE SUPPORTS - SCHEDULE 80

MAXIMUM SUPPORT SPACING (FEET)

NPS (INCHES)	OPERATING TEMPERATURE (°F)		
	60	100	140
1/2	5	4.5	2.5
3/4	5.5	4.5	2.5
1	6	5	3
1-1/2	6.5	5.5	3.5
2	7	6	3.5
3	8	7	4
4	9	7.5	4.5
6	10	9	5
8	11	9.5	5.5

NOTE: PLASTIC PIPE SUPPORTS SHALL BE AS NOTED ABOVE UNLESS MANUFACTURER'S RECOMMENDATION IS MORE STRINGENT FOR THE APPLICATION.

OUTDOOR GAS WATER HEATER SCHEDULE

MARK NO.	MODEL NO.	BTU INPUT	RECOVERY GPH @ 45°/77° RISE	GAS CONN SIZE	WIDTH SIZE	DEPTH SIZE	HEIGHT SIZE	WATER CONN SIZE	APPROX SHIP WEIGHT	VOLTAGE
GWH-1	RHEEM NO RTGH-95XLN OR APP'V EQUAL.	199,000	8.4/4.9	3/4"	18-1/2"	9-3/4"	27-1/2"	3/4"	82	120-1-60

NOTES:
1. SINGLE COMMERCIAL WALL MOUNTED REMOTE CONTROL
2. STANDARD VENT DISCHARGE KIT
3. NATURAL GAS PRESSURE : 7" – 10.5" W.C.
4. INSTALLATION SHALL INCLUDE HEAT TRACING OF ALL WATER PIPING.
5. INSTALLATION SHALL INCLUDE SURFACE MOUNTED WALL BOX WITH PIPE ENCLOSURE CHASE.
6. ELECTRICAL IS 120-1-60 , 90 WATTS
7. INSTALLATION SHALL INCLUDE GAS PRESSURE REGULATOR TO REDUCE GAS PRESSURE FROM 2 PSIG TO 9 W.C.
8. WARRANTY: 12 YEARS HEAT EXCHANGER, 5 YEAR PARTS, 1 YEAR LABOR

MIXING VALVE SCHEDULE

MARK NO.	MANUFACTURER'S MODEL NO.	TEMPERATURE (°F)	INLET	OUTLET
MV-1	LAWLER MODEL 911E	FACTORY SET 80°	1-1/4"	1-1/4"

SHOWER/EYEWASH THERMOSTATIC MIXING VALVES SHALL CONFORM TO ASSE 1071

PRODUCT LEGEND

HDO10 OIL	HDO10
15W40 ENGINE OIL	15W40
80W90 GEAR OIL	80W90
ANTI-FREEZE	AF
DEXTRON TRANS. FLUID	DEX

LUBRICATION PIPING MATERIALS:

1" X 0.058" WALL, C-1010 OR C-1021 STEEL TUBING WITH PARKER HANNIFIN OR APPROVED EQUAL FITTING.

CODES AND STANDARDS

- **2015 INTERNATIONAL PLUMBING CODE**
- **2015 INTERNATIONAL MECHANICAL CODE**
- **2015 INTERNATIONAL FUEL GAS CODE**
- **2010 ADA STANDARDS FOR ACCESSIBLE DESIGN**
- **2015 EXISTING BUILDING CODE**

PLUMBING EQUIPMENT SCHEDULE

MARK NO.	FIXTURE TYPE	MANUFACTURER'S MODEL NO.	MOUNT	MOUNT HEIGHT	WASTE SIZE	VENT SIZE	C.W. SIZE	H.W. SIZE	NOTES
SS-1	SERVICE SINK	FIAT MODEL NO. SF-1F TUF-TUB OR APPROVED EQUAL	FLOOR	–	1-1/2"	1-1/2"	1/2"	1/2"	DELTA MODEL NO. 28C2383 FAUCET WITH VACUUM BREAKER, P-TRAP WITH CLEANOUT, FIAT MODEL A-2 OVERFLOW PIPE
S-1	STAINLESS SINK SINGLE COMPARTMENT	ELKAY MODEL NO. DLRQ191910 OR APPROVED EQUAL	CABINET	–	1-1/2"	1-1/4"	1/2"	1/2"	ELKAY MODEL NO. LK-335 STRAINER, DELTA MODEL NO. 100LF-HDF (1.5 GPM) FAUCET, SUPPLIES WITH STOPS, P-TRAP WITH CLEANOUT.
EW-1	EMERGENCY EYEWASH/ SHOWER	HAWS MODEL 8309WC OR APPROVED EQUAL	WALL	36" TO NOZZLE	1-1/2"	1-1/4"	1-1/4" MIXED TEMPERATURE		BARRIER FREE, FACTORY TRAP, SIGNAGE

EQUALS BY ELJER, KOHLER, TOTO, AND AMERICAN STANDARD WILL BE ACCEPTED.

PLUMBING SPECIALITY SCHEDULE

MARK NO.	FIXTURE TYPE	MANUFACTURER'S MODEL NO.	MOUNT	MOUNT HEIGHT	WASTE SIZE	VENT SIZE	C.W. SIZE	H.W. SIZE	MIXED WATER SIZE	NOTES
HB-1	HOSE BIBB	WOODFORD MODEL NO. 24 OR APPROVED EQUAL	WALL	18" TO 24"	–	–	3/4"	–	–	ANTI-SIPHON, METAL WHEEL HANDLE
W.H.A.	WATER HAMMER ARRESTOR	ZURN SERIES 1700 OR APPROVED EQUAL	–	–	–	–	VARIES	VARIES	–	

EQUALS BY JAY R SMITH, ZURN, OATEY, OR JONES WILL BE ACCEPTED

ELECTRIC WATER COOLER SCHEDULE

MARK NO.	FIXTURE TYPE	MANUFACTURER'S MODEL NO.	MOUNT	MOUNT HEIGHT	WASTE SIZE	VENT SIZE	C.W. SIZE	NOTES
EWC-1	ELECTRIC WATER COOLER, ADA SPLIT LEVEL	ELKAY MODEL NO. EZSTL8WSLK OR APPROVED EQUAL	WALL	34-1/2" TO NOZ. CENTER	1-1/4"	1-1/4"	1/2"	ADA MOUNTED AT 34.5" AFF TO NOZZLE CENTERLINE, STAINLESS STEEL W/ TRIM BEZEL, WITH BOTTLE FILLING STATION, FILTER, MOUNTING KIT

AIR PUMP SCHEDULE

MARK NO.	FLUID	MANUFACTURER'S MODEL NO. (OR APPROVED EQUAL)	MAX FLIUD PRESSURE	FLUID INLET	FLUID OUTLET	PUMP DESIGN	AIR MOTOR DIAMETER	AIR INLET	MAX INBOUND AIR PRESSURE
AP 1	15W40 ENGINE OIL	GRACO MODEL NO. FIRE – BALL 6:1 MODEL 300	900 PSI	1 1/2" NPTF	1/2" NPT	DOUBLE BALL	3"	3/8" NPT	40-180 PSI
AP 2	80W90 GEAR OIL	GRACO MODEL NO. FIRE – BALL 6:1 MODEL 425	1100 PSI	1 1/2" NPTF	3/4" NPT	DOUBLE BALL	4.25"	1/2" NPT	40-180 PSI
AP 3	ANTI-FREEZE	GRACO MODEL NO. FIRE – BALL 6:1 MODEL 300	900 PSI	1 1/2" NPTF	1/2" NPT	DOUBLE BALL	3"	3/8" NPT	40-180 PSI
AP 4	DEXRON AUTOMATIC TRANS. FLUID	GRACO MODEL NO. FIRE – BALL 6:1 MODEL 300	900 PSI	1 1/2" NPTF	1/4" NPT	DOUBLE BALL	3"	3/8" NPT	40-180 PSI
AP 5	HDO10 OIL	GRACO MODEL NO. FIRE – BALL 6:1 MODEL 300	900 PSI	1 1/2" NPTF	1/2" NPT	DOUBLE BALL	3"	3/8" NPT	40-180 PSI

1. ALL AIR PUMP INSTALLATIONS TO INCLUDE AIR SHUT-OFF, BALL VALVE, FILTER, REGULATOR, AND LUBRICATOR ON PUMP INCOMING AIR LINES. AIR LINES TO BE 1/2" SCH. 40 PIPE WITH FINAL CONNECTION TO PUMP TO BE BY 1/2" AIR HOSE. FURNISH ALL HOSE, FITTINGS, ETC. INSTALL QUICK CONNECT FITTING AT WALL WHERE HOSE IS CONNECTED TO 1/2" SCH 40 PIPE.

2. GRACO SYSTEM SHALL INCLUDE STATIONARY 55 GAL. DRUM CART MODEL 24F915, BUNG ADAPTOR MODEL 24F918, SUCTION KIT, ETC.

LUBE REEL SCHEDULE

MARK NO.	PRODUCTS DISPENCED	DISPENSER REQUIRED	REEL MODEL NO.	HOSE
	ANTI-FREEZE	GRACO SDP8 SERIES ELECTRONIC PRESET ANIT-FREEZE METER	GRACO SERIES SD MODEL HPH55	3/8" X 50' 300 PSI
LR 1	HDO10 OIL	GRACO SDP8 SERIES ELECTRONIC PRESET OIL METER	GRACO SERIES SD MODEL HPH55	3/8" X 50' 2000 PSI
LR 2	15W40 ENGINE OIL	GRACO SDP8 SERIES ELECTRONIC PRESET OIL METER	GRACO SERIES SD MODEL HPH55	3/8" X 50' 2000 PSI
LR 3	80W90 GEAR OIL	GRACO SDP8 SERIES ELECTRONIC PRESET OIL METER	GRACO SERIES SD MODEL HPH55	3/8" X 50' 2000 PSI
LR 4	DEXRON AUTOMATIC TRANSMISSION FLUID	GRACO SDP8 SERIES ELECTRONIC PRESET ATF METER	GRACO SERIES SD MODEL HPH55	3/8" X 50' 2000 PSI
	ELECTRICAL	SEE ELECTRICAL PLANS FOR SPECIFICATIONS		

1. EACH REEL ASSEMBLY SHALL INCLUDE SERVICE LABEL KITS.
2. REEL ASSEMBLY SHALL INCLUDE MOUNTING BRACKETS/ HARDWARE REQUIRED FOR SIX REEL ASSEMBLY.
3. VERIFY/COORDINATE HOSE REEL COLORS WITH ARCHITECT/OWNER.

PLUMBING NOTES

1. THESE DRAWINGS ARE SCHEMATIC IN NATURE AND ARE NOT INTENDED TO SHOW ALL POSSIBLE CONDITIONS. IT IS INTENDED THAT A COMPLETE PLUMBING SYSTEM BE PROVIDED WITH ALL NECESSARY EQUIPMENT, ACCESSORIES, AND CONTROLS COMPLETELY COORDINATED WITH ALL TRADES. ALL REQUIREMENTS GIVEN IN THESE DOCUMENTS SHALL BE STRICTLY CONFORMED TO. ANY ITEMS AND LABOR REQUIRED FOR A COMPLETE PLUMBING SYSTEM IN ACCORDANCE WITH ALL APPLICABLE CODES, STANDARDS, LOCAL AUTHORITIES, AND THESE CONTRACT DOCUMENTS SHALL BE FURNISHED WITHOUT INCURRING ANY ADDITIONAL COST TO THE OWNER. CAREFULLY REVIEW ALL CONTRACT DOCUMENTS AND THE DESIGN OF OTHER TRADES BEFORE PREPARING SHOP DRAWINGS.
2. COORDINATE ALL WORK WITH ARCHITECTURAL, STRUCTURAL, HVAC, AND ELECTRICAL TRADES. PIPE ROUTING SHOWN IS DIAGRAMMATIC. PROVIDE ALL OFFSETS, ETC., TO AVOID INTERFERENCES WITH EQUIPMENT, PIPING, DUCTWORK, LIGHTS, CONDUIT, ETC.
3. FIELD VERIFY EXACT SIZE, MATERIAL, AND LOCATION OF ALL EXISTING UTILITIES BEFORE BEGINNING WORK.
4. VERIFY LOCATION OF ALL FIXTURES WITH ARCHITECTURAL PLANS.
5. VERIFY ALL FIXTURE MOUNTING HEIGHTS WITH ENGINEER AND ARCHITECT.
6. COORDINATE ALL FLOOR PENETRATIONS WITH STRUCTURAL DRAWINGS. SET SLEEVES IN FLOORS/WALLS AND ATTACHMENTS FOR HANGERS AS CONSTRUCTION PROGRESSES. ALL PENETRATIONS MUST BE SEALED AND HELD AS TIGHT TO COLUMNS OR WALLS AS POSSIBLE.
7. PROVIDE 12"X12" ACCESS PANEL FOR SHOCK ABSORBERS, TRAP PRIMERS, AND ALL VALVES LOCATED ABOVE NON-ACCESSIBLE CEILINGS AND INSIDE PIPE CHASES. EXACT LOCATION MUST BE COORDINATED WITH ARCHITECTURAL AND APPROVED BY ARCHITECT PRIOR TO INSTALLATION.
8. ALL PIPING SHALL BE CONCEALED INSIDE WALLS, WITHIN PIPE CHASES, OR ABOVE CEILINGS. HOLD ALL PIPING ABOVE CEILING AS HIGH AS POSSIBLE.
9. PLUMBING CONTRACTOR SHALL MAKE FINAL CONNECTIONS TO ALL EQUIPMENT INDICATED ON DRAWINGS FINAL CONNECTION SHALL INCLUDE ANY ADAPTORS, NIPPLES, SHUT-OFF VALVES, PRV'S, SHOCK ABSORBERS, BACKFLOW PREVENTION DEVICES, REGULATORS, ETC.
10. ALL STRUCTURAL PENETRATIONS (SLEEVES, BLOCK OUTS, ETC.) ARE TO BE LOCATED AND COORDINATED IN THE FIELD BY THE CONTRACTOR IN RELATION TO THE REQUIREMENTS OF FINAL EQUIPMENT AND FIXTURES SELECTED.
11. CONTRACTOR SHALL MAKE FINAL CONNECTIONS TO ALL DOMESTIC WATER AND SANITARY SEWERS, UNLESS OTHERWISE NOTED.
12. ALL PLUMBING COMPONENTS TO BE LEAD-FREE.
13. ALL OVERHEAD WATER PIPING SHALL BE INSTALLED BELOW CEILING INSULATION.
14. CONTRACTOR SHALL INSTALL WATER HAMMER ARRESTER EQUAL TO ZURN SERIES 1700 AT EACH PLUMBING GROUP.
15. CONTRACTOR TO FURNISH AND INSTALL ANTI-SIPHON VALVE ON EACH WATER HEATER.
16. CONTRACTOR SHALL FURNISH AND INSTALL BALL VALVES FOR WATER SHUT-OFF AT FIXTURE GROUPINGS.
17. ALL STOPS/SUPPLIES SHALL BE CHROME PLATED BRASS.
18. ALL GAS PIPING SHALL BE FURNISHED AND INSTALLED IN ACCORDANCE WITH NFPA 54, INTERNATIONAL FUEL GAS CODE.
19. ALL EXPOSED INTERIOR OR EXTERIOR GAS LINES ARE TO BE PAINTED BY THE PLUMBING CONTRACTOR WITH ONE COAT OF LATEX PAINT. INTERIOR COLOR TO MATCH WALL. EXTERIOR COLOR TO BE SELECTED BY ARCHITECT.

PLUMBING LEGEND

SS	SANITARY SEWER	XCW	EXISTING COLD WATER
CD	CONDENSATE DRAIN	XNG	EXISTING NATURAL GAS
CW	COLD WATER		HOT WATER RETURN PUMP
140°	140° HOT WATER	SV	BALL SVALVE
140°HWR	140° HOT WATER RETURN	VTR	VENT THRU ROOF
NG	NATURAL GAS		CONNECT TO EXISTING
A	COMPRESSED AIR	AAV	AIR ADMITTANCE VALVE (SBCCI APPROVED)

CIRCULATOR PUMP SCHEDULE

MARK NO.	TYPE	GPM	TOTAL HEAD FT. W.G.	MAXIMUM H.P.	MINIMUM EFFICIENCY	ELECTRICAL	DESIGN MFGR.	DESIGN MFGR. MODEL NO.
CP-1	IN-LINE CENTRIF.	0-11	0-4.5	1/40	–	120-1-60	TACO	006e3LC

NOTES:
1. SmartPlus-e HOT WATER RECIRCULATION PUMP WITH SmartPlug CONTROLS FOR DOMESTIC WATER
2. 1" BRONZE SWEAT
3. 6 FT. CORD

PLUMBING DRAWING INDEX

SHEET NO.	SHEET TITLE
P1.1	PLUMBING SCHEDULES, LEGEND, AND NOTES
P1.2	PLUMBING DETAILS
P2.1	PLUMBING DEMOLITION PLAN
P2.2	PLUMBING DEMOLITION DETAILS
P3.1	REVISED WASTE, WATER, AND GAS PLUMBING PLAN
P4.1	REVISED OIL/LUBE AND AIR PIPING PLAN
P5.1	REVISED WASTE & WATER PLUMBING RISER DIAGRAMS
P5.2	REVISED GAS PLUMBING RISER DIAGRAM

PLUMBING SCHEDULES, LEGEND, AND NOTES

WHORTON ENGINEERING, INC.

HVAC – PLUMBING – PROCESS CONTROL

RANDALL WHORTON, P.E.
PHONE: (256) 820-9897

25 SUMMERALL GATE ROAD
ANNISTON, ALABAMA 36205

WHORTON ENGINEERING PROJECT NO. 21108

SEAY SEAY & LITCHFIELD

1115 South Court Street
Montgomery, AL 36104
(334) 263-5162

Owner:
The Armory Commission of Alabama
1720 Cong WL Dickinson Drive
Montgomery, AL 36109

SS&L Job Number
14057

IFB Job Number
AC-22-B-0004-S

Date
JANUARY 2022

Drawn By
RDW

Checked By
RDW

Revised

Project Title
NORTHPORT
FMS #9 RENOVATIONS
NORTHPORT, AL

Sheet Title
PLUMBING SCHEDULES, LEGEND, AND NOTES

Sheet Number
P1.1

ALABAMA REGISTERED No.14192 PROFESSIONAL ENGINEER RANDALL D WHORTON
01-10-2022

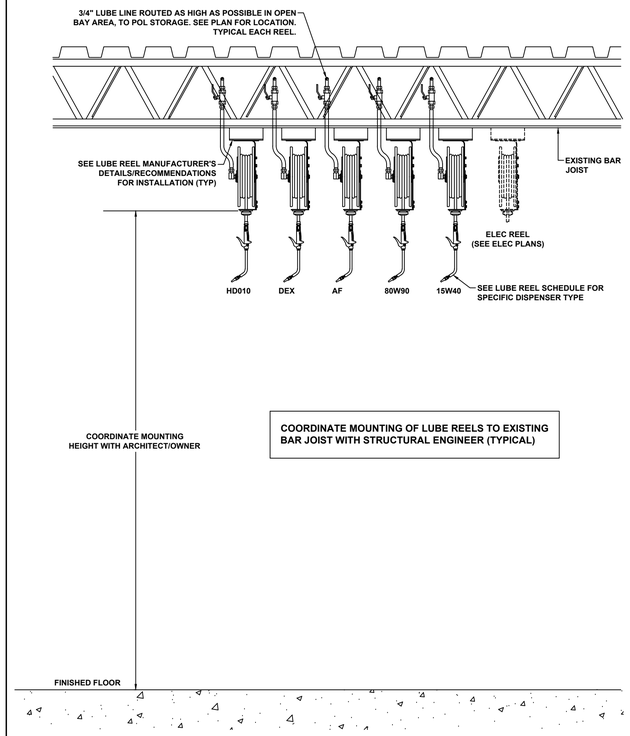

LUBE REEL MOUNTING DETAIL

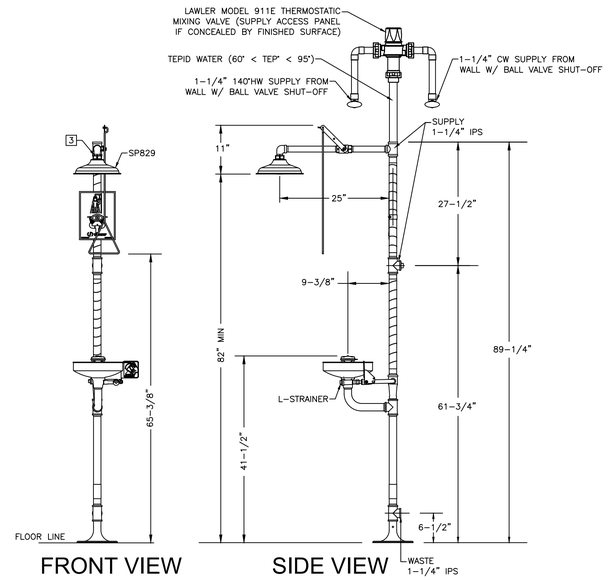

NOTES:

1. DIMENSIONS MAY VARY BY ± 1/2 INCH [13mm].
2. TO COMPLY WITH ANSI Z358.1–2009 FOR EMERGENCY EYEWASH OR EYE/FACE WASH AND SHOWER EQUIPMENT:
   - UNIT SHALL BE INSTALLED IN ACCORDANCE WITH MANUFACTURER'S INSTRUCTIONS AND ACCEPTABLE PLUMBING PRACTICES.
   - EYEWASH OR EYE/FACE WASH SHALL BE POSITIONED WITH NOZZLES NOT LESS THEN 83.8 CM (33 IN.) AND NO GREATER THAN 114.3 CM (45 IN.) FROM SURFACE ON WHICH USER STANDS AND 15.3 CM (6 IN.) MINIMUM FROM WALL OR NEAREST OBSTRUCTION.
   - SHOWER SHALL BE POSITIONED SO THAT SHOWER HEAD IS NOT LESS THAN 208.3 CM (82 IN.) NOR MORE THAN 243.8 CM (96 IN.) FROM SURFACE ON WHICH USER STANDS.
   - SHOWER SPRAY PATTERN SHALL HAVE A MINIMUM DIAMETER OF 50.8 CM (20 IN.) AT 152.4 CM (60 IN.) ABOVE SURFACE ON WHICH USER STANDS, AND CENTER OF SPRAY PATTERN SHALL BE LOCATED AT LEAST 40.6 CM (16 IN.) FROM ANY OBSTRUCTION.
3. DO NOT USE REGULAR PIPE SEALANT. IF NECESSARY USE DOW CORNING 832 SEALANT PLACING 5 SMALL BEADS ON THE MALE THREADS, JUST ABOVE THE FIRST THREAD.

DETAILS OF SHOWER/EYE WASH

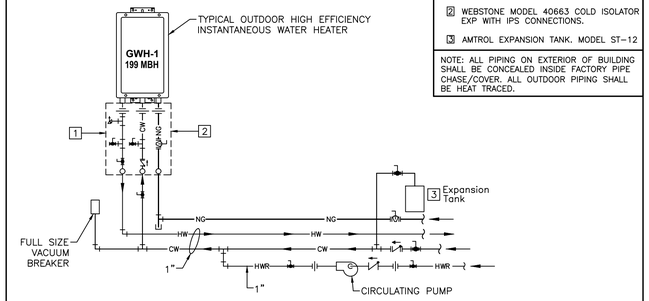

OUTDOOR GAS WATER HEATER DETAIL

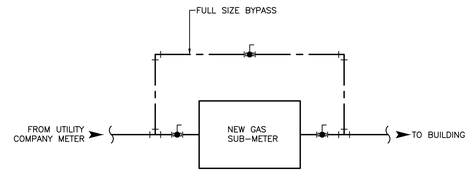

COORDINATE WITH DDC CONTROLS CONTRACTOR FOR COMPLETE INTERFACE TO THE HONEYWELL BUILDING AUTOMATION SYSTEM.

GAS SUB-METER PIPING DIAGRAM

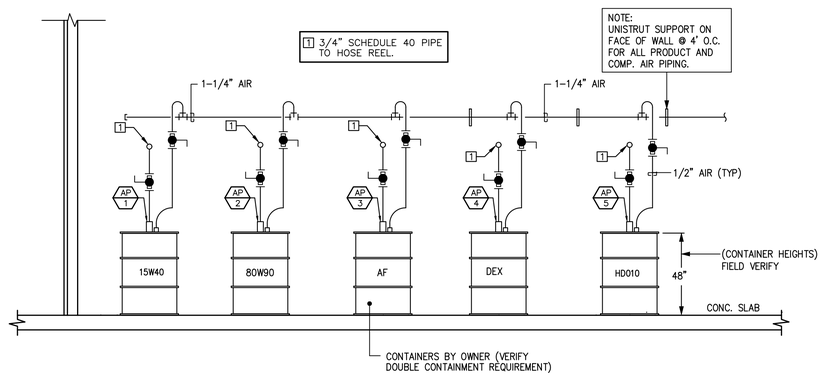

POL STORAGE AREA ELEVATION

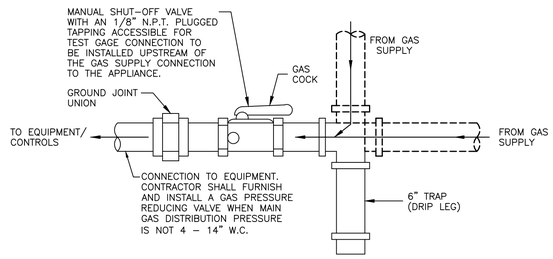

GAS CONNECTION TO EQUIPMENT DETAIL

PLUMBING DETAILS

WHORTON ENGINEERING, INC.
HVAC – PLUMBING – PROCESS CONTROL
RANDALL WHORTON, P.E.
PHONE: (256) 820-9897
25 SUMMERALL GATE ROAD
ANNISTON, ALABAMA 36205

WHORTON ENGINEERING PROJECT NO. 21108

SEAY SEAY & LITCHFIELD
1115 South Court Street
Montgomery, AL 36104
(334) 263-5162

Owner:
The Armory Commission of Alabama
1720 Cong WL Dickinson Drive
Montgomery, AL 36109

SS&L Job Number
14057

IFB Job Number
AC-22-B-0004-S

Date
JANUARY 2022

Drawn By
RDW

Checked By
RDW

Revised

Project Title
NORTHPORT
FMS #9 RENOVATIONS
NORTHPORT, AL

Sheet Title
PLUMBING DETAILS

Sheet Number
P1.2

ALABAMA REGISTERED No.14192 PROFESSIONAL ENGINEER RANDALL D. WHORTON
01-10-2022

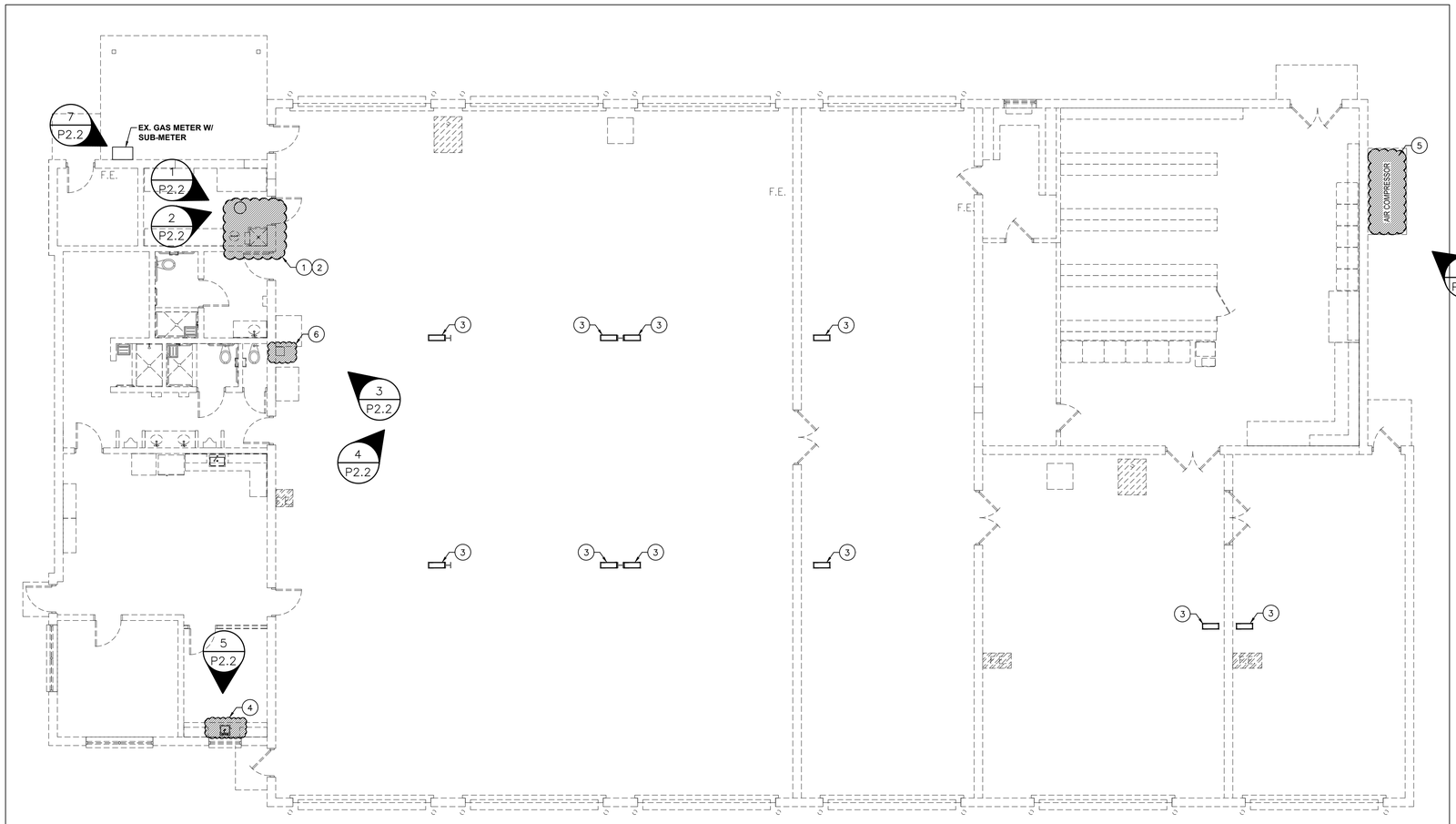

DEMOLITION NOTES

1. REMOVE EXISTING SERVICE SINK, WALL MOUNTED EMERGENCY EYEWASH, & OVERHEAD EMERGENCY DRENCH SHOWER HEAD. REMOVE AND CAP ASSOCIATED WASTE AND WATER PIPING AT WALL.
2. REMOVE EXISTING HOSE BIBB AND ASSOCIATED WATER PIPING THRU WALL AND UP TO CEILING.
3. EXISTING AIR REEL TO REMAIN. ADD NEW BALL VALVE SHUT-OFF AS NOTED ON REVISED PLAN.
4. REMOVE EXISTING CABINET MOUNTED SINK AND REPLACE WITH NEW, AS NOTED ON REVISED PLAN.
5. REMOVE EXISTING AIR COMPRESSOR AND ASSOCIATED OUTDOOR AIR PIPING AND CAP.
6. REMOVE EXISTING DRINKING FOUNTAIN AND REPLACE AS NOTED ON REVISED PLAN.

VERIFY DISPOSAL OF EXISTING EQUIPMENT WITH OWNER

GENERAL:

CONTRACTOR SHALL FIELD VERIFY ALL EXISTING CONDITIONS AND EQUIPMENT PRIOR TO BIDDING. THIS SHALL INCLUDE ALL ITEMS TO BE REMOVED OR RELOCATED, ALL ELECTRICAL, ALL REFRIGERANT PIPING, CONTROLS, ETC.

PATCH/REPAIR ALL OPENINGS LEFT ABANDONED DUE TO THE REMOVAL OF ALL EQUIPMENT (UNIT,DUCT, PIPING, ELECTRICAL, ETC.) PATCH/REPAIR ALL SURFACES TO MATCH EXISTING.

VERIFY DISPOSITION OF ALL EQUIPMENT WITH OWNER. INCLUDE ALL COSTS ASSOCIATED WITH COMPLETE REMOVAL AND DISPOSAL IN ACCORDANCE WITH CITY, STATE, AND FEDERAL REGULATIONS.

REPAIR/REPLACE ANY EXISTING EQUIPMENT DAMAGED DURING DEMOLITION.

PATCH/REPAIR WALLS, FLOOR, CEILING, ETC. TO MATCH EXISTING.

PROTECT ALL EXISTING BUILDINGS AND WORK TO REMAIN, INCLUDING ALL EXISTING STRUCTURE, FINISHES, AND MATERIALS AT ALL TIMES FROM DAMAGE DUE TO WORK UNDER THIS CONTRACT OR FROM DAMAGE DUE TO EXPOSURE TO THE ELEMENTS. ANY SUCH DAMAGE WILL BE REPAIRED, PATCHED, OR REPLACED TO MATCH ORIGINAL EXISTING CONDITION.

TEMPORARILY REMOVE EXISTING ITEMS TO REMAIN IF REQUIRED TO PROPERLY INSTALL NEW WORK. UPON COMPLETION OF DEMOLITION OR NEW WORK, RE-INSTALL SUCH REMOVED ITEMS TO MATCH ORIGINAL EXISTING CONDITION.

ALL BIDDERS SHALL VISIT THE JOB SITE PRIOR TO SUBMITTING A BID TO DETERMINE THE TOTAL SCOPE OF WORK, AND TO COMPLETELY FAMILIARIZE THEMSELVES WITH THE PROJECT. INCLUDING ALL EXISTING CONDITIONS, BUILDINGS, STRUCTURE, FINISHES, AND MATERIALS IN ALL AREAS AFFECTED BY WORK UNDER THIS CONTRACT.

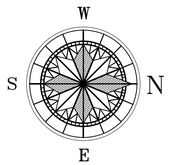

PLUMBING DEMOLITION PLAN

SCALE: 1/8" = 1'-0"

WHORTON ENGINEERING, INC.

HVAC – PLUMBING – PROCESS CONTROL

RANDALL WHORTON, P.E.
PHONE: (256) 820-9897

25 SUMMERALL GATE ROAD
ANNISTON, ALABAMA 36205

WHORTON ENGINEERING PROJECT NO. 21108

SEAY SEAY & LITCHFIELD

1115 South Court Street
Montgomery, AL 36104
(334) 263-5162

Owner:
The Armory Commission of Alabama
1720 Cong WL Dickinson Drive
Montgomery, AL 36109

SS&L Job Number
14057

IFB Job Number
AC-22-B-0004-S

Date
JANUARY 2022

Drawn By
RDW

Checked By
RDW

Revised

Project Title
NORTHPORT
FMS #9 RENOVATIONS
NORTHPORT, AL

Sheet Title
PLUMBING DEMOLITION PLAN

Sheet Number
P2.1

ALABAMA REGISTERED No.14192 PROFESSIONAL ENGINEER RANDALL D. WHORTON

01-10-2022



[1] REMOVE EXISTING SINK AND EMERGENCY EYEWASH. CAP EXISTING WASTE AND WATER PIPING AT WALL.

1 P2.1 **EX. PLUMBING EQUIPMENT**

NOT TO SCALE

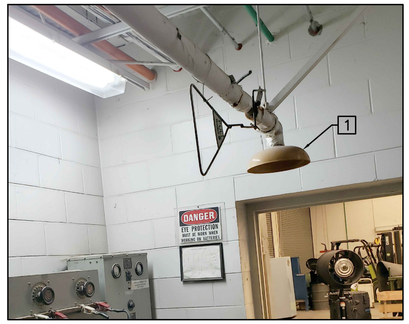

[1] REMOVE EXISTING EMERGENCY DRENCH SHOWER HEAD AND CAP WATER LINE AT CEILING.

2 P2.1 **EX. PLUMBING EQUIPMENT**

NOT TO SCALE



[1] REMOVE EXISTING DRINKING FOUNTAIN AND REPLACE AS SHOWN ON REVISED PLAN.

[2] REMOVE HOSE BIBB AND ASSOCIATED WATER PIPING THRU WALL AND UP ALONG WALL IN EXISTING BATTERY ROOM AND CAP.

3 P2.1 **EX. PLUMBING EQUIPMENT**

NOT TO SCALE

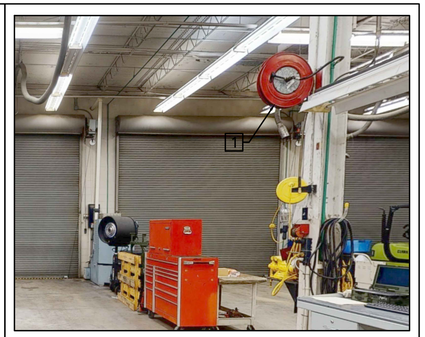

[1] EXISTING AIR HOSE REEL SHALL REMAIN. INSTALL NEW BALL VALVE SHUTOFF VALVE ON AIR LINE SERVING HOSE REEL, AS NOTED ON REVISED PLAN

4 P2.1 **EX. PLUMBING EQUIPMENT**

NOT TO SCALE

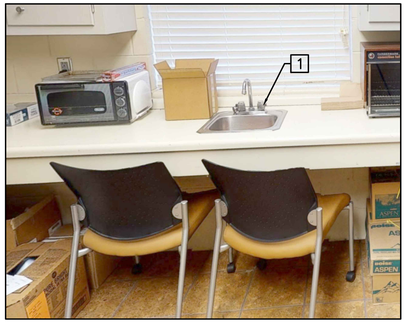

[1] REMOVE EXISTING SINGLE COMPARTMENT SINK AND REPLACE WITH NEW, AS SHOWN ON REVISED PLAN

5 P2.1 **EX. PLUMBING EQUIPMENT**

NOT TO SCALE

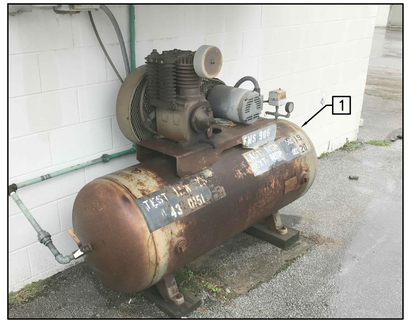

[1] REMOVE EXISTING AIR COMPRESSOR AND ALL ASSOCIATED AIR PIPING ROUTED ALONG BUILDING EXTERIOR. CAP REMAINING AIR PIPING AT WALL.

6 P2.1 **EX. PLUMBING EQUIPMENT**

NOT TO SCALE

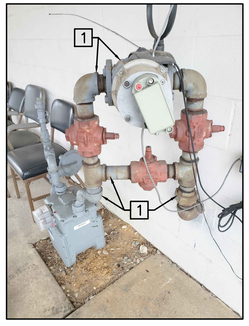

[1] REMOVE EXISTING GAS PIPING TIED TO EXISTING METER AND EXISTING GAS SUB-METER. REPLACE WITH NEW PIPING AND SUB-METER, AS SHOWN ON REVISED PLAN.

7 P2.1 **EX. PLUMBING EQUIPMENT**

NOT TO SCALE

PLUMBING DEMOLITION DETAILS

WHORTON ENGINEERING, INC.

HVAC – PLUMBING – PROCESS CONTROL

RANDALL WHORTON, P.E.
PHONE: (256) 820-9897

25 SUMMERALL GATE ROAD
ANNISTON, ALABAMA 36205

WHORTON ENGINEERING PROJECT NO. 21108

SEAY SEAY & LITCHFIELD

1115 South Court Street
Montgomery, AL 36104
(334) 263-5162

Owner:
The Armory Commission of Alabama
1720 Cong WL Dickinson Drive
Montgomery, AL 36109

SS&L Job Number
14057

IFB Job Number
AC-22-B-0004-S

Date
JANUARY 2022

Drawn By
RDW

Checked By
RDW

Revised

Project Title
NORTHPORT
FMS #9 RENOVATIONS
NORTHPORT, AL

Sheet Title
PLUMBING DEMOLITION DETAILS

Sheet Number
P2.2

ALABAMA
REGISTERED
No.14192
PROFESSIONAL
ENGINEER
RANDALL D. WHORTON

01-10-2022

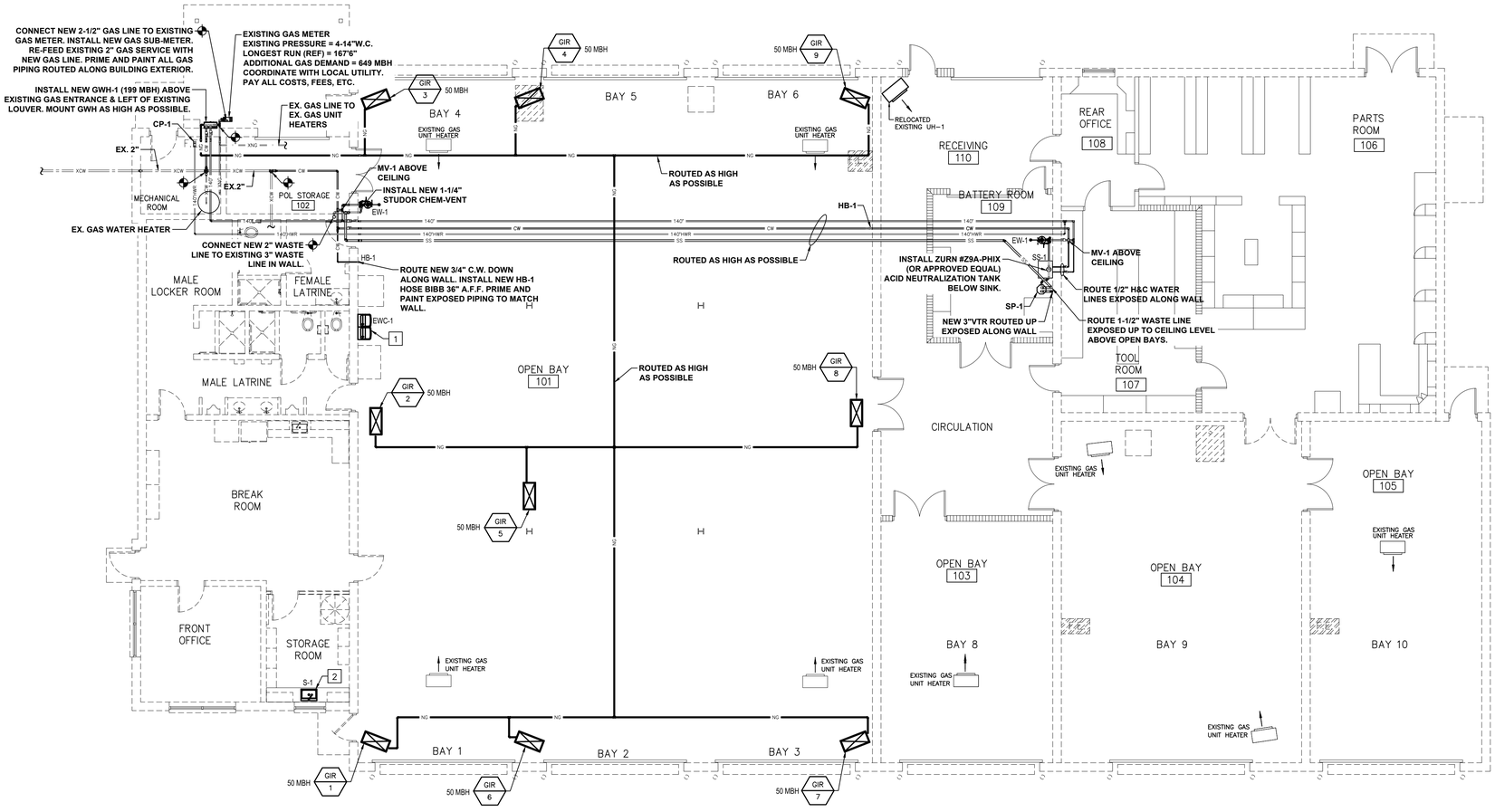

REVISED WASTE, WATER, AND GAS PLUMBING PLAN

SCALE: 1/8" = 1'-0"

RENOVATION NOTES

1. INSTALL NEW EWC-1 SPLIT-LEVEL ELECTRIC WATER COOLER, TO REPLACE EXISTING. RE-WORK EXISTING WASTE AND WATER PIPING, AS NEEDED, FOR PROPER INSTALLATION OF NEW WATER COOLER.
2. INSTALL NEW S-1 10" DEEP SINGLE COMPARTMENT SINK, TO REPLACE EXISTING. RE-WORK EXISTING WASTE AND WATER PIPING, AS NEEDED, FOR PROPER INSTALLATION OF NEW SINK.
3. EXISTING AIR HOSE REEL TO REMAIN. INSTALL NEW BALL VALVE SHUT-OFF ON EXISTING AIR LINE SERVING EXISTING REEL.



NEW GAS WATER HEATER

SUMP PUMP SCHEDULE

MARK NO.	MANUFACTURER'S MODEL NO.	MAX. H.P.	ELECTRICAL	RPM	DISCHARGE
SP-1	LIBERTY PUMP MODEL NO. 404 OR APPROVED EQUAL	1/3	115-1-60 5.2 FLA	3450	1-1/2"

NOTES:

1. The pump has two ports: one on the top the other on the side, either can be used as a vent or inlet. Using the appropriate piping (1-1/2" on the model 404 and 2" on models 405, 405HV) connect the fixture to the pump. Note: a trap shall be used between the fixture and pump, a flange type is recommended. HAND-TIGHTEN TO PUMP. DO NOT OVERTIGHTEN OR CROSS-THREAD.
   - 1.1. DISCHARGE: HAND-TIGHTEN ONLY. Install a union just above the pump to facilitate removal if necessary for cleaning or service. Install a check valve just above the union (as close to the pump as possible) to prevent the backflow of water after each pump cycle.
   - 1.2. VENT: Provision is made for a vent stack to allow extra volume for high suds conditions, and to ensure proper drainage of the fixture. HAND-TIGHTEN ONLY. DO NOT CAP-OFF VENT. DO NOT use ONE-WAY QUICK-VENTS or AIR ADMITTENCE VALVES as they will not guarantee proper fixture performance. The vent pipe should have a union to facilitate removal if required and shall be connected directly to a building or house vent.
2. For automatic operation using Liberty's supplied switch, the two cords should be interconnected and plugged into a separately fused, grounded outlet of proper amp capacity for your selected pump model. (See the pump's nameplate for electrical specifications of your model.) Both cords are equipped with 3-prong plugs and must be plugged into a properly grounded 3-wire receptacle. DO NOT REMOVE THE GROUND PRONGS.

WHORTON ENGINEERING, INC.

HVAC – PLUMBING – PROCESS CONTROL

RANDALL WHORTON, P.E.
PHONE: (256) 820-9897

25 SUMMERALL GATE ROAD
ANNISTON, ALABAMA 36205

WHORTON ENGINEERING PROJECT NO. 21108

SEAY SEAY & LITCHFIELD

1115 South Court Street
Montgomery, AL 36104
(334) 263-5162

Owner:
The Armory Commission of Alabama
1720 Cong WL Dickinson Drive
Montgomery, AL 36109

SS&L Job Number
14057

IFB Job Number
AC-22-B-0004-S

Date
JANUARY 2022

Drawn By
RDW

Checked By
RDW

Revised

Project Title
NORTHPORT
FMS #9 RENOVATIONS
NORTHPORT, AL

Sheet Title
REVISED WASTE, WATER AND GAS PLUMBING PLAN

Sheet Number
P3.1

ALABAMA REGISTERED No.14192 PROFESSIONAL ENGINEER RANDALL D. WHORTON
01-10-2022

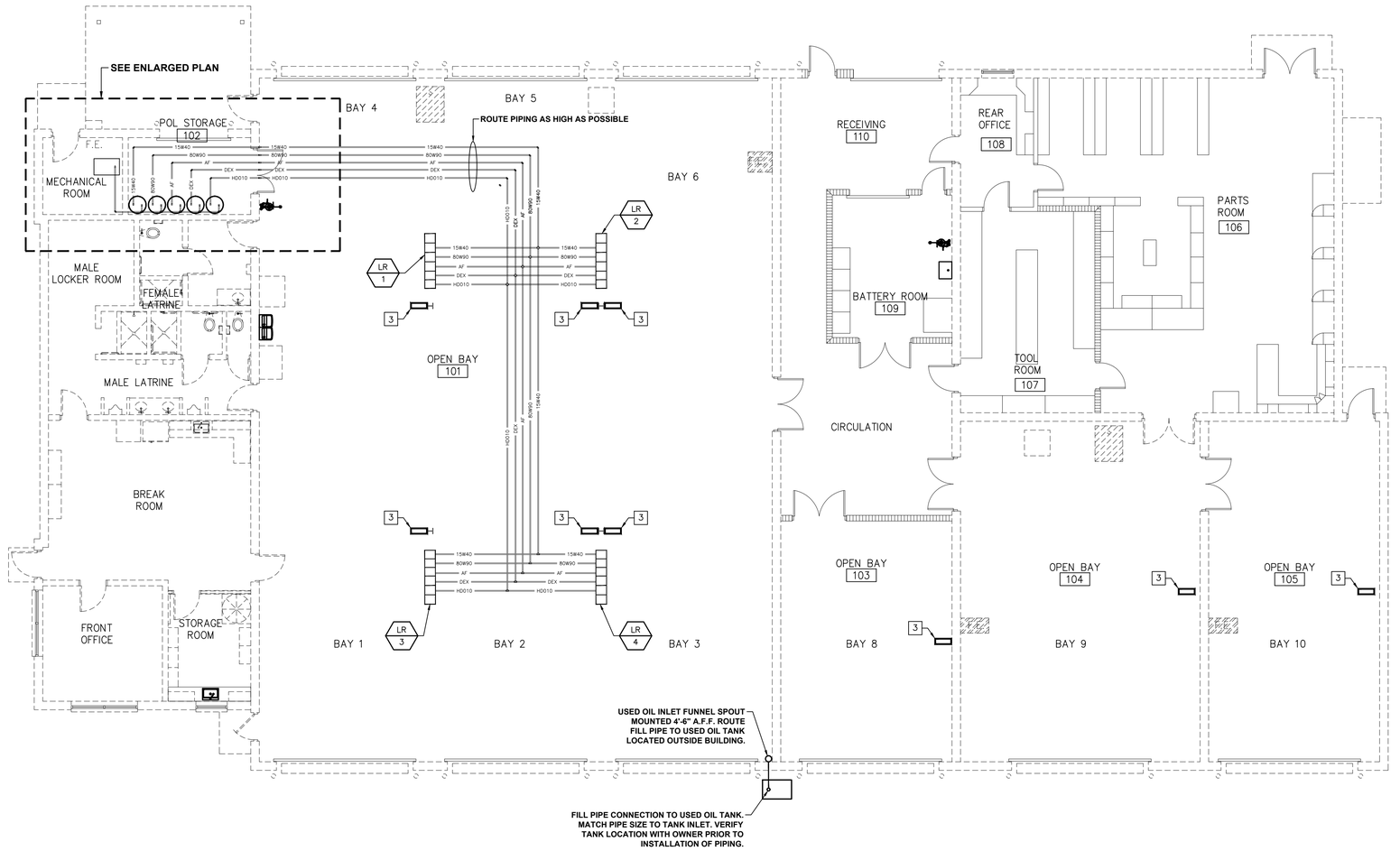

REVISED OIL/LUBE AND AIR PIPING PLAN

SCALE: 1/8" = 1'-0"

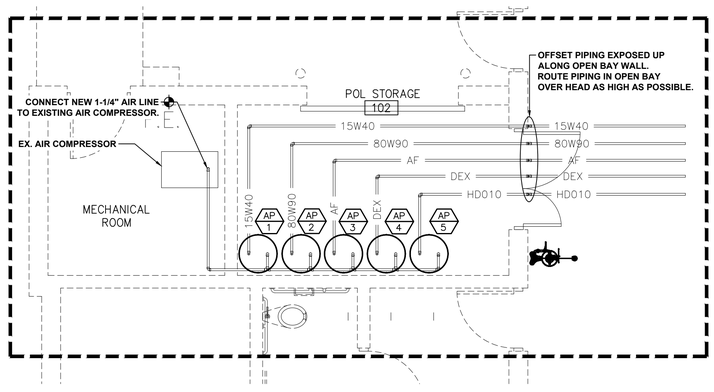

ENLARGED POL STORAGE

SCALE: 1/4" = 1'-0"

RENOVATION NOTES

1. INSTALL NEW EWC-1 SPLIT-LEVEL ELECTRIC WATER COOLER, TO REPLACE EXISTING. RE-WORK EXISTING WASTE AND WATER PIPING, AS NEEDED, FOR PROPER INSTALLATION OF NEW WATER COOLER.
2. INSTALL NEW S-1 10" DEEP SINGLE COMPARTMENT SINK, TO REPLACE EXISTING. RE-WORK EXISTING WASTE AND WATER PIPING, AS NEEDED, FOR PROPER INSTALLATION OF NEW SINK.
3. EXISTING AIR HOSE REEL TO REMAIN. INSTALL NEW BALL VALVE SHUT-OFF ON EXISTING AIR LINE SERVING EXISTING REEL.

SEAY SEAY & LITCHFIELD
1115 South Court Street
Montgomery, AL 36104
(334) 263-5162

Owner:
The Armory Commission of Alabama
1720 Cong WL Dickinson Drive
Montgomery, AL 36109

SS&L Job Number
14057

IFB Job Number
AC-22-B-0004-S

Date
JANUARY 2022

Drawn By
RDW

Checked By
RDW

Revised

Project Title
NORTHPORT
FMS #9 RENOVATIONS
NORTHPORT, AL

Sheet Title
REVISED OIL/LUBE AND AIR PIPING PLAN

Sheet Number
P4.1

WHORTON ENGINEERING, INC.
HVAC – PLUMBING – PROCESS CONTROL
RANDALL WHORTON, P.E.
PHONE: (256) 820-9897
25 SUMMERALL GATE ROAD
ANNISTON, ALABAMA 36205

WHORTON ENGINEERING PROJECT NO. 21108

ALABAMA No.14192 PROFESSIONAL ENGINEER RANDALL D. WHORTON
01-10-2022

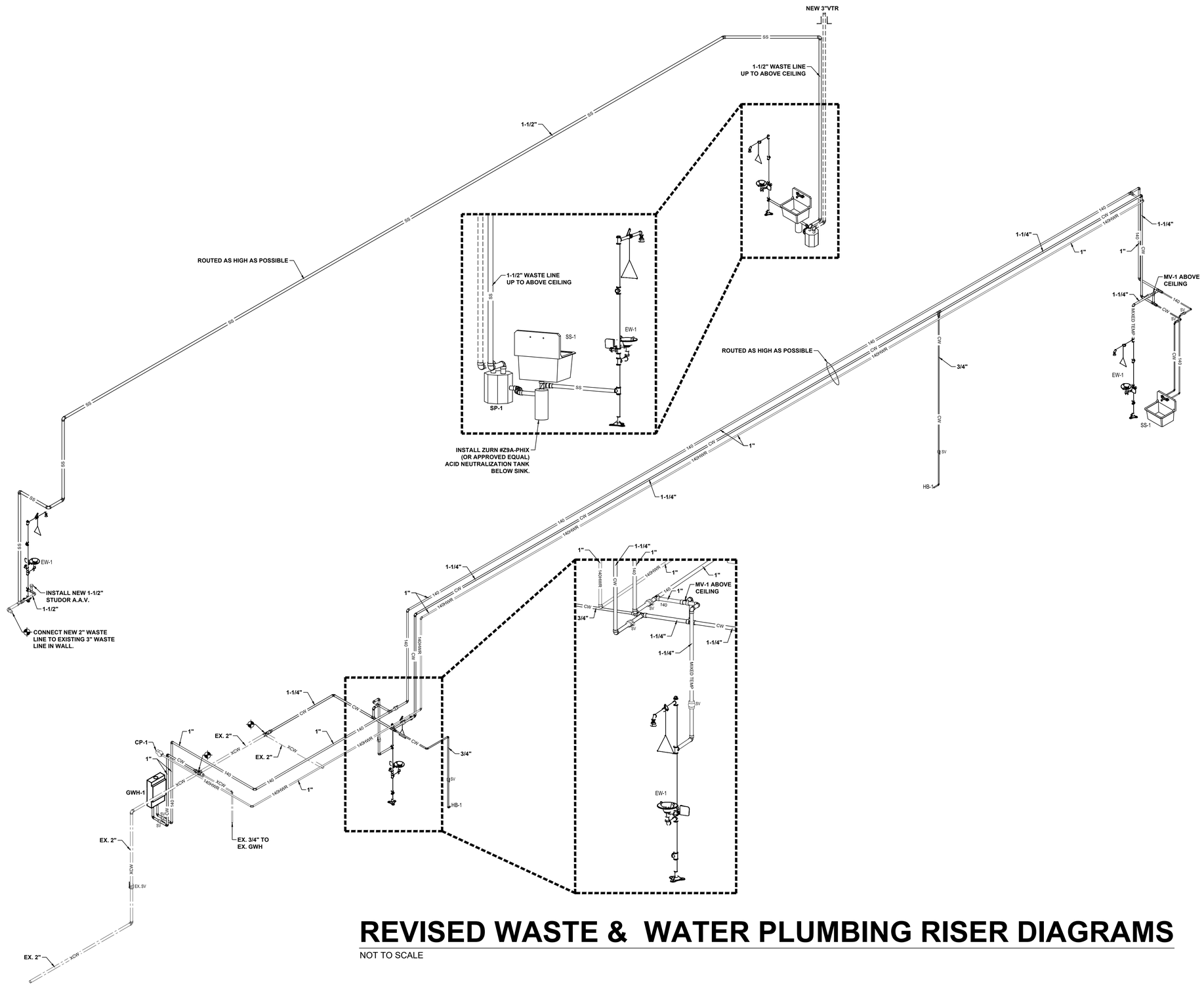

REVISED WASTE & WATER PLUMBING RISER DIAGRAMS

NOT TO SCALE

WHORTON ENGINEERING, INC.

HVAC – PLUMBING – PROCESS CONTROL

RANDALL WHORTON, P.E.
PHONE: (256) 820-9897

25 SUMMERALL GATE ROAD
ANNISTON, ALABAMA 36205

WHORTON ENGINEERING PROJECT NO. 21108

SEAY SEAY & LITCHFIELD

1115 South Court Street
Montgomery, AL 36104
(334) 263-5162

Owner:
The Armory Commission of Alabama
1720 Cong WL Dickinson Drive
Montgomery, AL 36109

SS&L Job Number
14057

IFB Job Number
AC-22-B-0004-S

Date
JANUARY 2022

Drawn By
RDW

Checked By
RDW

Revised

Project Title
NORTHPORT
FMS #9 RENOVATIONS
NORTHPORT, AL

Sheet Title
REVISED WASTE & WATER
PLUMBING RISER DIAGRAMS

Sheet Number
P5.1

ALABAMA
No.14192
PROFESSIONAL
ENGINEER
RANDALL D. WHORTON
01-10-2022

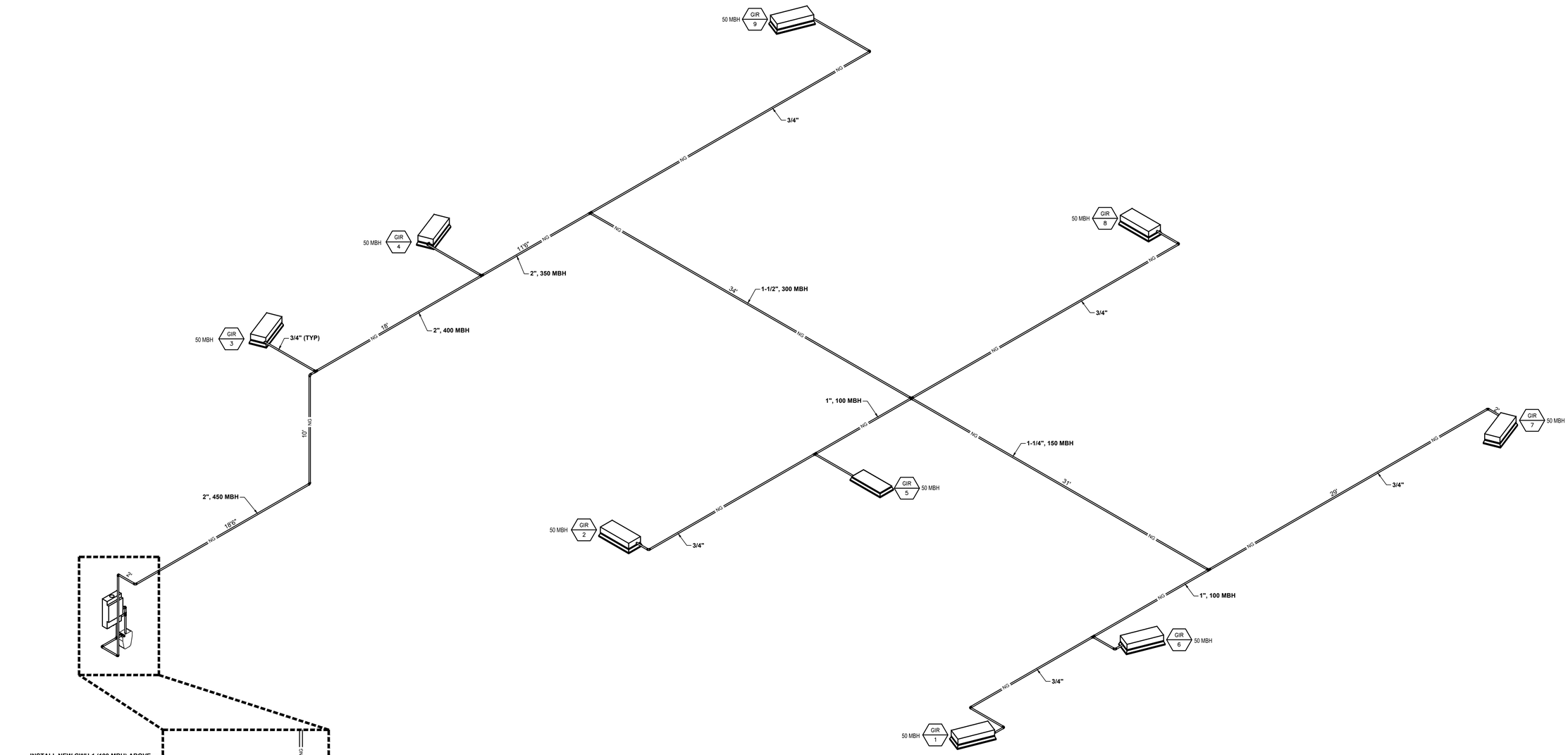

AT GWH-1 PROVIDE AND INSTALL VENT FLUE. EXTEND FLUE ABOVE THE EXISTING CANOPY AT THIS LOCATION.

DISTANCES ON RISER DIAGRAM ARE FOR REFERENCE PURPOSES ONLY.

REVISED GAS PLUMBING RISER DIAGRAM

NOT TO SCALE

WHORTON ENGINEERING, INC.

HVAC – PLUMBING – PROCESS CONTROL

RANDALL WHORTON, P.E.
PHONE: (256) 820-9897

25 SUMMERALL GATE ROAD
ANNISTON, ALABAMA 36205

WHORTON ENGINEERING PROJECT NO. 21108

SEAY SEAY & LITCHFIELD

1115 South Court Street
Montgomery, AL 36104
(334) 263-5162

Owner:
The Armory Commission of Alabama
1720 Cong WL Dickinson Drive
Montgomery, AL 36109

SS&L Job Number
14057

IFB Job Number
AC-22-B-0004-S

Date
JANUARY 2022

Drawn By
RDW

Checked By
RDW

Revised

Project Title
NORTHPORT
FMS #9 RENOVATIONS
NORTHPORT, AL

Sheet Title
REVISED GAS PLUMBING
RISER DIAGRAM

Sheet Number
P5.2

ALABAMA
No.14192
PROFESSIONAL
ENGINEER
RANDALL D. WHORTON
01-10-2022

HVAC NOTES

1. ALL DIMENSIONS SHOWN ARE NET INTERNAL.
2. INSTALL OPPOSED BLADE BALANCING DAMPERS IN ALL NEW DIFFUSERS AND GRILLES.
3. THESE DRAWINGS ARE SCHEMATIC IN NATURE AND ARE NOT INTENDED TO SHOW ALL POSSIBLE CONDITIONS. IT IS INTENDED THAT A COMPLETE HVAC SYSTEM BE PROVIDED WITH ALL NECESSARY EQUIPMENT, APPURTENANCES, AND CONTROLS, COMPLETELY COORDINATED WITH ALL DISCIPLINES. ALL REQUIREMENTS OF THESE DOCUMENTS SHALL BE STRICTLY CONFORMED WITH. ANY ITEMS AND LABOR REQUIRED FOR A COMPLETE HVAC SYSTEM IN ACCORDANCE WITH ALL APPLICABLE CODES, STANDARDS, AND THESE CONTRACT DOCUMENTS SHALL BE FURNISHED WITHOUT INCURRING ANY ADDITIONAL COST TO THE CONTRACT. CAREFULLY REVIEW ALL CONTRACT DOCUMENTS AND THE DESIGN OF OTHER TRADES BEFORE PREPARING SHOP DRAWINGS.
4. COORDINATE DUCTWORK AND PIPING WITH STRUCTURAL, PLUMBING, FIRE PROTECTION AND ELECTRICAL. MAKE OFFSETS AND TRANSITIONS AS REQUIRED TO CLEAR STRUCTURAL MEMBERS, ETC. COORDINATE WITH OTHER TRADES WITHOUT ADDITIONAL EXPENSE TO THE OWNER.
5. REFER TO ARCHITECTURAL CEILING PLANS FOR EXACT LOCATION OF ALL CEILING MOUNTED AIR DISTRIBUTION DEVICES; COORDINATE EXACT LOCATION OF GRILLES, REGISTERS, AND DIFFUSERS WITH ARCHITECTURAL AND INTERIOR REFLECTED CEILING PLANS AND LIGHTING FIXTURES. FOR PARTICULAR ITEMS NOT SHOWN ON THE ARCHITECTURAL REFLECTED CEILING PLAN, PREPARE A DRAWING AND PRESENT IT TO THE ARCHITECT FOR REVIEW AND/OR APPROVAL.
6. COORDINATE ALL ROOF AND SLAB PENETRATIONS WITH THE STRUCTURAL ENGINEER. TRANSITIONS RECTANGULAR DUCTWORK ON THE BOTTOM AND THE SIDES. MAINTAIN DUCTWORK LEVEL AS HIGH AS POSSIBLE UNLESS NOTED OTHERWISE.
7. THE HVAC CONTRACTOR IS TO REVIEW THE ENTIRE SET OF PLANS FOR COORDINATION WITH OTHER TRADES. SHOP DRAWINGS WITH ALL TRADES COORDINATED WILL BE REQUIRED.
8. THE HVAC CONTRACTOR SHALL REVIEW THE ARCHITECTURAL PLANS FOR FINAL LOCATIONS OF ALL RATED WALLS, CEILINGS, FLOORS, ETC. THE HVAC CONTRACTOR SHALL FURNISH AND INSTALL FIRE OR FIRE/SMOKE DAMPERS IN ALL RATED LOCATIONS WHETHER SHOWN ON THE MECHANICAL PLANS OR NOT.
9. CONTRACTOR SHALL COORDINATE VOLTAGE AND PHASE OF EACH PIECE OF EQUIPMENT WITH THE ELECTRICAL CONTRACTOR PRIOR TO ORDERING.
10. ALL THREE PHASE EQUIPMENT SHALL BE EQUIPPED WITH PHASE LOSS PROTECTION.
11. ALL MOTOR STARTERS SHALL BE FURNISHED BY THE MECHANICAL CONTRACTOR.
12. CONTRACTOR TO COORDINATE ALL CEILING TYPES WITH DIFFUSERS. ALL DIFFUSERS IN GYPSUM CEILING SHALL INCLUDE PLASTER FRAME.
13. ALL DISTRIBUTION DEVICES SHALL HAVE FACE OPERABLE DAMPERS. ALL DIFFUSER RUNOUTS SHALL INCLUDE SPIN-IN WITH DAMPER IN ROUND DUCTS.
14. INSULATE TOP SIDE/BACK OF ALL DIFFUSERS/GRILLES, ETC.
15. CONDENSATE DRAIN LINES RUNNING HORIZONTALLY SHALL BE SLOPED 1/4" PER FOOT DOWN IN THE DIRECTION OF FLOW AS INDICATED.
16. ALL 3/4" AND 1" CONDENSATE DRAIN TRAPS SHALL BE EZ-TRAP OR APPROVED EQUAL WITH FLOAT SWITCH.
17. INSTALL AUXILIARY DRAIN PAN UNDER ALL UNITS MOUNTED IN ATTIC, ABOVE CEILINGS, ETC. INSTALL WET SWITCH FOR UNIT SHUT DOWN IN AUXILIARY DRAIN PAN - DIVERSITECH "WET SWITCH" CONDENSATE DETECTION SWITCH OR APPROVED EQUAL.
18. REFERENCE PLUMBING PLANS FOR CONDENSATE PIPING. IF CONDENSATE DRAINS ARE NOT SHOWN ON THE PLUMBING PLANS, ALL CONDENSATE DRAINS SHALL BE FURNISHED AND INSTALLED BY THE HVAC CONTRACTOR.
19. VERIFY WITH THE ARCHITECTURAL DRAWINGS, SIZE, LOCATION, AND MOUNTING HEIGHT OF ALL LOUVERS. VERIFY COLOR AND FINISH WITH OWNER.
20. ALL UNUSED PORTION OF LOUVERS SHALL BE CAPPED OFF WITH 1" INSULATED ALUMINUM AND SEALED AIR/WATER TIGHT.
21. UNLESS OTHERWISE NOTED, UNITS SHALL INCLUDE A HONEYWELL SPYDER PUL6438SR (OR EQUAL) PROGRAMMABLE CONTROLLER WITH HONEYWELL SYLK I/O MODULES OR EQUAL) AS REQUIRED TO PROVIDE THE CONTROL POINTS AS LISTED IN THE POINTS MATRIX. WALL MODULES SHALL BE COMMUNICATING HONEYWELL TR-71H MODULES (OR EQUAL) FOR TEMPERATURE/HUMIDITY CONTROL AND TR-40-CO2 (OR EQUAL) FOR CO2 CONTROL WHERE A CO2 SENSOR IS SPECIFIED.
22. ALL THERMOSTATS TO BE MOUNTED 4'-0" A.F.F. TO HIGHEST OPERABLE CONTROL UNLESS OTHERWISE INDICATED.
23. PORTIONS OF DUCTWORK VISIBLE THROUGH GRILLES, REGISTERS, AND DIFFUSERS IN FINISHED AREAS SHALL BE PAINTED FLAT BLACK.
24. FLEXIBLE DUCT (SUPPLY RUNOUTS ONLY) SHALL NOT EXCEED 6'-0" IN LENGTH.
25. DUCTWORK SHALL BE INSULATED IN ACCORDANCE WITH THE FOLLOWING SCHEDULE:
    RECTANGULAR SUPPLY: 1" INTERNAL
    ROUND SUPPLY: 1-1/2" EXTERNAL
    FLEXIBLE SUPPLY: 1" PRE INSULATED
    RECTANGULAR RETURN: 1" INTERNAL
    OSA/EXHAUST: 1-1/2" EXTERNAL
26. DUCTWORK SHALL BE GALVANIZED AND INSTALLED IN ACCORDANCE WITH SMACNA STANDARDS.
27. LABEL ALL DUCTS WITH TYPE (SUPPLY, RETURN, ETC.) AND ARROWS INDICATING DIRECTION OF AIR FLOW. LABELS SHALL BE EVERY SIX FEET AND AT EACH CHANGE OF DIRECTION (T'S, ELBOWS, ETC.)
28. ROUND DUCT SHALL BE INSULATED WITH DUCT WRAP EQUAL TO CERTAINTEED SOFT TOUCH DUCT WRAP WITH FSK VAPOR RETARDER FACING TYPE 75 WITH MINIMUM INSTALLED R-VALUE 4.2. ROUND DUCTS LOCATED WITHIN THE ATTIC SHALL BE INSULATED WITH DUCT WRAP EQUAL TO CERTAINTEED SOFT TOUCH DUCT WRAP WITH FSK VAPOR RETARDER FACING TYPE 100 WITH MINIMUM INSTALLED R-VALUE 6.0
29. ALL OPEN ENDED DUCT SHALL BE CAPPED WITH 1/2"X1/2" WIRE MESH.
30. ALL EXPOSED DUCT SHALL BE INSULATED INTERNALLY WITH 1" DUCT LINER EQUAL TO CERTAINTEED TG2 DUCT LINER WITH MINIMUM INSTALLED R-VALUE 4.0.
31. ALL EXPOSED DUCT SHALL BE PAINTED. DUCT SHALL BE "PAINT GRIP". COORDINATE PAINT COLOR WITH OWNER.
32. DUCT LINER FOR RECTANGULAR DUCTS SHALL BE EQUAL TO CERTAINTEED TG2 DUCT LINER WITH A MINIMUM R-VALUE OF 4.0. RECTANGULAR DUCTS LOCATED WITHIN THE ATTIC SHALL BE LINED WITH DUCT LINER EQUAL TO CERTAINTEED TG2 DUCT LINER WITH A MINIMUM R-VALUE OF 4.0 AND WRAPPED EXTERNALLY WITH DUCT WRAP EQUAL TO CERTAINTEED SOFT TOUCH DUCT WRAP WITH FSK VAPOR RETARDER FACING TYPE 75 WITH A MINIMUM INSTALLED R-VALUE OF 4.2.
33. WARRANTIES SHALL BEGIN AT FINAL ACCEPTANCE. ALL COMPRESSORS SHALL INCLUDE MIN. OF FIVE YEAR WARRANTY. ONE YEAR WARRANTY FOR LABOR, PARTS, UNITS, ETC. IS REQUIRED FOR ALL EQUIPMENT. ADDITIONALLY CONTRACTOR IS RESPONSIBLE FOR ALL PREVENTATIVE MAINTENANCE AND ROUTINE SERVICE ON INSTALLED EQUIPMENT FOR THE ONE YEAR WARRANTY PERIOD IN ORDER TO MAINTAIN ALL FACTORY/MANUFACTURER WARRANTIES.
34. THE CONTRACTOR SHALL INSTALL ANY CURB-MOUNTED EQUIPMENT IN SUCH A WAY THAT NO WATER LEAKAGE IS INTRODUCED INTO THE BUILDING.
35. ALL COLOR/FINISH SELECTIONS SHALL BE MADE BY OWNER.
36. EXHAUST FAN CONTROL RELAYS SHALL BE WIRED TO THE NORMALLY CLOSED CONTACTS TO ALLOW THE FANS TO OPERATE IN THE EVENT THAT THE DDC CONTROLS ARE OFFLINE. EXHAUST FANS SHALL BE CONTROLLED BY THE BUILDING SCHEDULE.
37. COORDINATE DDC CONTROLLER TERMINAL ASSIGNMENTS WITH AANG DDC STANDARDS AND PRACTICES.
38. CARBON MONOXIDE DETECTORS SHALL BE MACURCO MODEL CM-6 (OR APPROVED EQUAL).

HVAC LEGEND

SYMBOL	DESCRIPTION	SYMBOL	DESCRIPTION	SYMBOL	DESCRIPTION
	CEILING DIFFUSER - SUPPLY RECTANGULAR WITH ROUND NECK 4-WAY THROW UNLESS OTHERWISE INDICATED		MANUAL VOLUME DAMPER OPPOSED BLADE		45° VANED ELBOW (PROVIDE ALL SQUARE OR RECTANGULAR ELBOWS WITH VANES EVEN IF SYMBOL IS MISSING)
	CEILING DIFFUSER - RETURN RECTANGULAR WITH SQUARE NECK	M	LOW LEAKAGE MOTORIZED VOLUME DAMPER		VANED TEE (PROVIDE ALL SQUARE OR RECTANGULAR TEE'S WITH VANES EVEN IF SYMBOL IS MISSING)
	SIDEWALL DIFFUSER - SUPPLY WITH MULTI-VANE DEFLECTOR	T	THERMOSTAT LOCATION		STANDARD DUCT SIZE TRANSITION
	SIDEWALL DIFFUSER - RETURN WITH 30° FIXED DEFLECTION	M	CARBON MONOXIDE SENSOR LOCATION		STANDARD SQUARE TO ROUND TRANSITION
XX-X XXX CFM	DIFFUSER TAG REFERENCE SCHEDULE FOR SIZING		STANDARD 90° RADIUS ELBOW		CONNECTION TO EXISTING
12"X12"	NEW RECTANGULAR DUCT WIDTH X DEPTH		STANDARD 45° RADIUS ELBOW		
10"ø	NEW ROUND DUCT DIAMETER		90° VANED ELBOW (PROVIDE ALL SQUARE OR RECTANGULAR ELBOWS WITH VANES EVEN IF SYMBOL IS MISSING)		

CEILING MOUNTED ELECTRIC HEATER SCHEDULE

MARK NO.	NOMINAL CFM	VOLTAGE	K.W.	BTU/HR (000)	AMPS	°F △ T	MANUFACTURER (OR APPROVED EQUAL)	UNIT MODEL NUMBER	UNIT WEIGHT (LBS.)	NOTES
CEH 1	300	208-1-60	2.0	6.8	9.6	42	BERKO	FFCH-548	27	SEE BELOW

1. UNIT TO INCLUDE A SURFACE MOUNTING ENCLOSURE.
2. UNIT TO INCLUDE AUTOMATIC THERMAL CUTOUT AND POWER DISCONNECT.
3. UNIT TO INCLUDE A HONEYWELL TL7235 (OR EQUAL) LCD LINE VOLTAGE NON-PROGRAMMABLE THERMOSTAT AND SHALL BE COMPLETELY INTERFACED TO EXISTING HONEYWELL BUILDING AUTOMATION SYSTEM.

APPROVED EQUALS: MARKEL AND QMARK

HVAC DRAWING INDEX

SHEET NO.	SHEET TITLE	SHEET NO.	SHEET TITLE
M1.1	HVAC LEGEND, NOTES, AND SCHEDULES	M2.3	HVAC DETAILS
M1.2	HVAC SCHEDULES	M2.4	HVAC DETAILS
M1.3	HVAC SCHEDULES AND DETAILS	M2.5	HVAC DETAILS
M1.4	HVAC SCHEDULES AND DETAILS	M3.1	HVAC DEMOLITION PLAN
M2.1	HVAC DETAILS	M4.1	HVAC REVISED PLAN
M2.2	HVAC DETAILS	M5.1	STORAGE BUILDING HVAC PLAN

CODES AND STANDARDS

- **2015 INTERNATIONAL PLUMBING CODE**
- **2015 INTERNATIONAL FUEL GAS CODE**
- **2015 INTERNATIONAL EXISTING BUILDING CODE**
- **2015 INTERNATIONAL MECHANICAL CODE**
- **ASHRAE 90.1-2013 ENERGY STANDARD**

HVAC LEGEND, NOTES, AND SCHEDULES

WHORTON ENGINEERING, INC.
HVAC - PLUMBING - PROCESS CONTROL
RANDALL WHORTON, P.E.
PHONE: (256) 820-9897
25 SUMMERALL GATE ROAD
ANNISTON, ALABAMA 36205

WHORTON ENGINEERING PROJECT NO. 21108

SEAY SEAY & LITCHFIELD
1115 South Court Street
Montgomery, AL 36104
(334) 263-5162

Owner:
The Armory Commission of Alabama
1720 Cong WL Dickinson Drive
Montgomery, AL 36109

SS&L Job Number
14057

IFB Job Number
AC-22-B-0004-S

Date
JANUARY 2022

Drawn By
JH

Checked By
RDW

Revised

Project Title
NORTHPORT
FMS #9 RENOVATIONS
NORTHPORT, AL

Sheet Title
HVAC LEGEND, NOTES, AND SCHEDULES

Sheet Number
M1.1

STATE OF ALABAMA LICENSED No.14192 PROFESSIONAL ENGINEER RANDALL D. WHORTON
01-10-2022

VEHICLE FUME EXHAUST VENTILATION / SYSTEM NOTES

1. EXHAUST DUCTWORK SHALL BE RATED FOR 6" NEGATIVE STATIC PRESSURE. ROUND SPIRAL DUCTWORK AND FITTINGS SHALL BE CONSTRUCTED OF SPIRAL LOCKSEAM DUCTWORK AT THE SIZES LISTED IN THE TABLE BELOW, AND CONSTRUCTED PER SMACNA STANDARDS. RECTANGULAR DUCT SHALL BE FABRICATED AND INSTALLED PER SMACNA STANDARDS FOR THE REQUIRED PRESSURE CLASS, INCLUDING ALL REQUIRED BRACING.

2. CONTRACTOR TO KEEP EXHAUST DUCT AS HIGH AS POSSIBLE. VERIFY DUCT SIZES AS SHOWN WILL FIT WITH ADEQUATE CLEARANCE, MODIFY LOCATION SLIGHTLY AS NECESSARY.

3. COORDINATE WITH ELECTRICAL CONTRACTOR AND OWNER FOR EXACT LOCATION OF EXHAUST SYSTEM SWITCHES.

ROUND SPIRAL DUCT (–6" W.G.)		
DIAMETER (IN.)	DUCT GAGE	
	DUCT	FITTINGS
10"	22	22
12"	22	22
14"	22	20
16"	22	18
18"	22	18
20"	22	18
22"	22	16
24"	20	16

4. SLOTTED ALUMINUM CHANNEL, ARI–3000 MODEL TO BE MOUNTED FROM STRUCTURE (SEE DETAIL FOR MOUNTING TO JOISTS).

5. EXHAUST DUCT TO BE MOUNTED ABOVE EXHAUST CHANNEL (SEE MOUNTING DETAILS).

6. INLINE CENTRIFUGAL EXHAUST FAN MOUNTED HIGH IN SPACE AND SUSPENDED FROM STRUCTURE. PROVIDE BACKDRAFT DAMPER AT DISCHARGE.

7. PROVIDE ROOF–MOUNTED RELIEF VENT AND SEAL WEATHER TIGHT. INSTALL DUCT PLENUM WITH TURNING VANES ON INSIDE.

8. THE PROJECT INCLUDES THE INSTALLATION OF A NEW VEHICLE FUME EXHAUST SYSTEM (2) FOR THE EXISTING BAYS (6). THE INSTALLATION INCLUDES A NEW ARI–HETRA OR APPROVED EQUAL SYSTEM WITH EXHAUST DUCTS, FANS, MOTORS, HARDWARE, ETC. EACH EXHAUST CONNECTION POINT SHALL BE RATED FOR 1700 CFM, 600 DEGREES–F. THE SILICON HOSE SHALL BE RATED FOR 1700 CFM, 600 DEGREES–F.

9. EACH SYSTEM (2) SHALL INCLUDE QUICK CONNECT FITTINGS, TWO DIESEL EXHAUST CANES, TWO ADDITIONAL SECTIONS OF ADDITIONAL 8" HOSE 10 FOOT IN LENGTH, 8" DIAMETER WYE ADAPTER FITTING, ETC.

10. SYSTEM SHALL INCLUDE A WALL MOUNTED STORAGE RACK FOR EXTRA HOSE/DUCT AND ACCESSORIES AS SHOWN ON THE PLANS.

11. ALL ITEMS NOTED, SHOWN ON THE PLANS, OR NEEDED TO PROVIDE A COMPLETE OPERATING SYSTEM INSTALLED IN ACCORDANCE WITH THE MANUFACTURER'S RECOMMENDATIONS, OSHA, NIOSH, ETC. SHALL BE FURNISHED AND INSTALLED.

12. EACH OF THE EXHAUST SYSTEMS SHALL INCLUDE TWO 8" DIAMETER SILICON FLEXIBLE HOSE DROP ON A NON–MOTORIZED MOBILE HOSE REEL/SPRING AS SHOWN ON THE PLANS AND SPECIFICATIONS. THE HOSE SHALL BE SPRING SUPPORTED AND RETRACTED FOR STORAGE WHEN NOT IN USE AND SHALL BE APPROXIMATELY 30 FEET IN TOTAL LENGTH.

ARI-HETRA ARI-3000 FUME EXHAUST COMPONENTS

ITEMS	PART #	QUANTITY	DESCRIPTION
1	200–001	–	ALUMINUM SLOTTED SUCTION DUCT, ARI–3000 (REFERENCE PLANS FOR SUCTION DUCT LENGTH)
2	210–001	4	DUCT CONNECTOR
3	110–003	4	LIMIT STOP SET
4	110–011	4	DUCT CONNECTOR PLATE
5	210–005	4	END COVER
6	120–250	4	TOP DUCT CONNECTOR
8	110–002	–	BRACKET (REFERENCE PLAN LAYOUT)
9	820–356	2	7.5 HP EXHAUST FAN 208–240/460V 3 PHASE
10	999–999	4	ACCESSORIES FOR FAN (INLET AND OUTLET SHEET METAL, VIB PADS)
11	999–905	4	DIESEL CANE
12	907–200	4	8" Y PIPE ADAPTER
13	–	4	10FT., 600'F SILICONE HOSE EXTENSIONS WITH QUICK CONNECT FITTINGS.

1. SYSTEM TO INCLUDE FOUR (4) SPRING OPERATED HOSE REELS EQUIPPED WITH 34 FT. OF 8"ø EXHAUST HOSE TEMPERATURE RATED UP TO 600'F ON TROLLEYS. SYSTEM TO INCLUDE QUICK CONNECT FITTINGS.
2. VERIFY QUANTITY WITH PLANS.

VEHICLE EXHAUST FAN SCHEDULE

MARK NO.	MOUNTING	CFM	STATIC IN W.G.	SONES	H.P.	VOLTAGE	MANUFACTURER	MODEL NO.	NOTES
VEF 1	INLINE	4,000	6	0.9	7.5	208–3–60	AMERICAN FAN COMPANY	QBCS–165	SEE BELOW
VEF 2	INLINE	4,000	6	0.9	7.5	208–3–60	AMERICAN FAN COMPANY	QBCS–165	SEE BELOW

1. CENTRIFUGAL STYLE CLASS 2, COORDINATE EXACT ARRANGEMENT WITH DRAWINGS.
2. VIBRATION ISOLATION HANGERS.
3. BACKDRAFT DAMPER AT DISCHARGE.
4. FLEX DUCT CONNECTOR AT OUTLET.
5. PROVIDE WITH PREMIUM EFFICIENCY MOTOR.
6. FAN TO BE SWITCHED WITH WALL SWITCH.

NOTE: FURNISHED WITH ARI–HETRA VEHICLE EXHAUST EQUIPMENT.

GAS INFRARED HEATER SCHEDULE

MARK NO.	VOLTAGE	MOUNTING	MOUNTING HEIGHT	GAS INPUT MBH	MANUFACTURER	MODEL NO.	NOTES
GIR 1	120–1–60 3 AMPS MAX	CEILING	TILT 30° 14'–0"	50	RE–VERBER–RAY	DR–50–NFS–2	SEE BELOW
GIR 2	120–1–60 3 AMPS MAX	CEILING	TILT 30° 14'–0"	50	RE–VERBER–RAY	DR–50–NFS–2	SEE BELOW
GIR 3	120–1–60 3 AMPS MAX	CEILING	TILT 30° 14'–0"	50	RE–VERBER–RAY	DR–50–NFS–2	SEE BELOW
GIR 4	120–1–60 3 AMPS MAX	CEILING	TILT 30° 14'–0"	50	RE–VERBER–RAY	DR–50–NFS–2	SEE BELOW
GIR 5	120–1–60 3 AMPS MAX	CEILING	TILT 30° 14'–0"	50	RE–VERBER–RAY	DR–50–NFS–2	SEE BELOW
GIR 6	120–1–60 3 AMPS MAX	CEILING	TILT 30° 14'–0"	50	RE–VERBER–RAY	DR–50–NFS–2	SEE BELOW
GIR 7	120–1–60 3 AMPS MAX	CEILING	TILT 30° 14'–0"	50	RE–VERBER–RAY	DR–50–NFS–2	SEE BELOW
GIR 8	120–1–60 3 AMPS MAX	CEILING	TILT 30° 14'–0"	50	RE–VERBER–RAY	DR–50–NFS–2	SEE BELOW
GIR 9	120–1–60 3 AMPS MAX	CEILING	TILT 30° 14'–0"	50	RE–VERBER–RAY	DR–50–NFS–2	SEE BELOW

1. MECHANICAL CONTRACTOR TO FURNISH AND INSTALL ALL INFRARED HEATERS. HEATER CONTROL SHALL BE BY BUILDING AUTOMATION (REFERENCE CONTROL DETAILS FOR ADDITIONAL INFORMATION). ELECTRICAL CONTRACTOR TO FURNISH AND INSTALL ELECTRICAL POWER, 120 VAC COILS, AND ALL ASSOCIATED CONDUIT, WIRE, ETC. MECHANICAL CONTRACTOR TO VERIFY ALL FINAL CONNECTIONS PRIOR TO INITIAL START–UP. DIRECT SPARK IGNITION.
2. VERIFY FINAL MOUNTING HEIGHT AND LOCATION WITH ARCHITECT. MOUNTING SHALL BE ABLE TO ADJUST MOUNTING ANGLE OF HEATER. INITIAL MOUNTING ANGLE SHALL BE 30 DEGREES.
3. ALL INFRA–RED HEATERS SHALL BE PROVIDED WITH DDC CONTROLS. HEATERS SHALL INCLUDE BLACK BULB SENSOR AND HONEYWELL COMMUNICATING THERMOSTAT MODEL TB3026B. HEATERS SHALL BE FULLY INTERFACED TO THE BUILDING AUTOMATION SYSTEM.

THE CONTRACTOR/SUPPLIER SHALL FURNISH AND/OR INSTALL/DELIVER GAS INFRA–RED SPACE HEATERS AS SHOWN ON THE DRAWING(S) AS DESCRIBED BELOW:

HEATERS SHALL BE RE–VERBER–RAY MODEL(S) AS SCHEDULED AND AS MANUFACTURED BY DETROIT RADIANT PRODUCTS COMPANY – WARREN, MICHIGAN. HEATERS SHALL BE EQUIPPED WITH A 120 VAC, 60 HZ, O, MANUAL IGNITION/SPARK PILOT IGNITION/GLO–COIL IGNITION/DIRECT SPARK IGNITION/MILLVOLT CONTROL SYSTEM. HEATERS SHALL BE DESIGN CERTIFIED BY A.G.A., AND COMPLY WITH CURRENT OSHA REQUIREMENTS, ACCEPTED BY FIA/FM AND BE LISTED BY UL.

THE HEATER'S COMBUSTION SURFACE SHALL BE MADE OF PERFORATED CERAMIC REFRACTORY, SHALL BE CAPABLE OF OPERATING CONTINUOUSLY AT 1810°F AND SHALL WITHSTAND THERMAL SHOCK WHEN WATER QUENCHED.

THE MANUFACTURER SHALL WARRANT THE HEATER'S INFRA–RED ELEMENT ASSEMBLY FOR A PERIOD OF TEN (10) YEARS. THE SECONDARY RADIATING SURFACE (RODS OR SCREENS) SHALL BE WARRANTED FOR TEN (10) YEARS AGAINST DETERIORATION AND FAILURE, AND THE MANUFACTURER SHALL WARRANT ITS ORIGINAL POSITION FROM THE CERAMIC BY PROVIDING A TEN (10) YEAR WARRANTY ON THE (ROD OR SCREEN) RETAINING DEVICE.

HEATERS SHALL OPERATE SATISFACTORILY ON NATURAL GAS AT AN INLET PRESSURE OF 7 INCHES W.C.

THE CONTRACTOR SHALL MAINTAIN CLEARANCES TO AUTOMOBILES AND COMBUSTIBLES AS RECOMMENDED BY THE MANUFACTURER.

HVAC SCHEDULES

WHORTON ENGINEERING, INC.
HVAC – PLUMBING – PROCESS CONTROL
RANDALL WHORTON, P.E.
PHONE: (256) 820–9897
25 SUMMERALL GATE ROAD
ANNISTON, ALABAMA 36205

WHORTON ENGINEERING PROJECT NO. 21108

SEAY SEAY & LITCHFIELD
1115 South Court Street
Montgomery, AL 36104
(334) 263–5162

Owner:
The Armory Commission of Alabama
1720 Cong WL Dickinson Drive
Montgomery, AL 36109

SS&L Job Number
14057

IFB Job Number
AC–22–B–0004–S

Date
JANUARY 2022

Drawn By
JH

Checked By
RDW

Revised

Project Title
NORTHPORT
FMS #9 RENOVATIONS
NORTHPORT, AL

Sheet Title
HVAC SCHEDULES

Sheet Number
M1.2

ALABAMA No.14192 PROFESSIONAL ENGINEER RANDALL D. WHORTON
01–10–2022

DESTRATIFICATION FAN SCHEDULE
DF-1 AND DF-2 (10 FT. DIAMETER)

MODEL NO.	BIG ASS FANS POWERFOIL D (10 FT. DIA.) OR APPROVED EQUAL.
NUMBER AND TYPE OF AIRFOILS	SIX (6) PATENTED AIRFOILS
AIRFOIL FINISH	MILL FINISH ALUMINUM OR CUSTOM COLOR FINISH
WINGLET (STANDARD COLOR)	POWERFOIL WINGLET (SAFETY YELLOW)
CONTROLLER	VARIABLE SPEED CONTROLLER (WALL MOUNT), NEMA 4X
INPUT POWER AND REQUIRED BREAKER	208/230 VAC, 60 HZ, 3ø, 10 A
MOTOR AND DRIVE	NEODYMIUM MAGNET MOTOR / DIRECT DRIVE
MAXIMUM SPEED	145 RPM
MAXIMUM OPERATING TEMPERATURE (°F)	131°F
FAN WEIGHT (AS SHOWN)	220 LBS
MINIMUM AIRFOIL CLEARANCES REQUIRED	2 FT. ON SIDES, 4 FT. BELOW CEILING DECK

1. 10 YEAR MECHANICAL WARRANTY; 10 YEAR ELECTRICAL WARRANTY WITH FACTORY INSTALLATION; 1 YEAR LABOR WARRANTY.
2. CONTRACTOR SHALL FURNISH AND INSTALL STRUCTURAL SUPPORTS REQUIRED TO INSTALL FAN IN ACCORDANCE WITH MANUFACTURER'S RECOMMENDATIONS. STRUCTURAL SUPPORTS SHALL BE SUBMITTED TO THE ARCHITECT FOR REVIEW AND APPROVAL.
3. FAN TO INCLUDE "NO ASS" PACKAGE.
4. COORDINATE HANGING HEIGHT AND FINAL LOCATION WITH EQUIPMENT AND OTHER SYSTEMS TO ENSURE PROPER OPERATION.

DESTRATIFICATION FAN SCHEDULE
DF-3 THRU DF-6 (8 FT. DIAMETER)

MODEL NO.	BIG ASS FANS POWERFOIL D (8 FT. DIA.) OR APPROVED EQUAL.
NUMBER AND TYPE OF AIRFOILS	SIX (6) PATENTED AIRFOILS
AIRFOIL FINISH	MILL FINISH ALUMINUM OR CUSTOM COLOR FINISH
WINGLET (STANDARD COLOR)	POWERFOIL WINGLET (SAFETY YELLOW)
CONTROLLER	VARIABLE SPEED CONTROLLER (WALL MOUNT), NEMA 4X
INPUT POWER AND REQUIRED BREAKER	208/230 VAC, 60 HZ, 3ø, 10 A
MOTOR AND DRIVE	NEODYMIUM MAGNET MOTOR / DIRECT DRIVE
MAXIMUM SPEED	200 RPM
MAXIMUM OPERATING TEMPERATURE (°F)	131°F
FAN WEIGHT (AS SHOWN)	212 LBS
MINIMUM AIRFOIL CLEARANCES REQUIRED	2 FT. ON SIDES, 4 FT. BELOW CEILING DECK

1. 10 YEAR MECHANICAL WARRANTY; 10 YEAR ELECTRICAL WARRANTY WITH FACTORY INSTALLATION; 1 YEAR LABOR WARRANTY.
2. CONTRACTOR SHALL FURNISH AND INSTALL STRUCTURAL SUPPORTS REQUIRED TO INSTALL FAN IN ACCORDANCE WITH MANUFACTURER'S RECOMMENDATIONS. STRUCTURAL SUPPORTS SHALL BE SUBMITTED TO THE ARCHITECT FOR REVIEW AND APPROVAL.
3. FAN TO INCLUDE "NO ASS" PACKAGE.
4. COORDINATE HANGING HEIGHT AND FINAL LOCATION WITH EQUIPMENT AND OTHER SYSTEMS TO ENSURE PROPER OPERATION.
5. FAN DF-5 AND DF-6 TO BE INCLUDED IN ALTERNATE. REFERENCE PLANS AND SPECIFICATIONS FOR ADDITIONAL INFORMATION.

NOTE: SEE DESTRATIFICATION FAN DETAILS (DF-1 THRU DF-6) ON SHEET M2.1 FOR ADDITIONAL INFORMATION.

EXHAUST FAN SCHEDULE

MARK NO.	MOUNTING	CFM	STATIC IN. W.C.	SONES	H.P.	VOLTAGE	MANUFACTURER (OR APPROVED EQUAL)	UNIT MODEL NO.	WEIGHT (LBS.)	NOTES
EF 4	ROOF	130	0.35	5.6	1/25	115-1-60	LOREN COOK	100R10DL	40	1 2 3
EF 8	INLINE	550	0.25	8.4	1/6	115-1-60	LOREN COOK	80SQN-B	115	4 5 6 7

1. FAN TO INCLUDE FACTORY MOUNTED/PREWIRED FAN SPEED CONTROL.
2. FAN TO BE CONTROLLED WITH WALL MOUNTED THERMOSTAT.
3. FAN TO INCLUDE FACTORY ROOF CURB, TIE-DOWN EYELETS, PREWIRED DISCONNECT, AND DAMPER.
4. FAN TO BE SWITCHED WITH LIGHTING.
5. FAN TO BE INTERLOCKED WITH BATTERY CHARGING SYSTEM.
6. FAN MOTOR TO BE EXTERNAL TO EXHAUST DUCT.
7. FAN TO INCLUDE FACTORY DAMPER, PREWIRED DISCONNECT, OSHA GUARD/MOTOR COVER, AND VIBRATION ISOLATORS.

APPROVED EQUALS: BREIDERT, GREENHECK, AND PENN.

RELIEF VENT SCHEDULE

MARK NO.	CFM	THROAT AREA S.F.	P.D.	MATERIAL	MANUFACTURER (OR APPROVED EQUAL)	MODEL NO.	NOTES
RV 1	4,000	9.968	0.05	SPUN ALUMINUM	LOREN COOK	PR-42	SEE BELOW
RV 2	4,000	9.968	0.05	SPUN ALUMINUM	LOREN COOK	PR-42	SEE BELOW
RV 3	550	1.485	0.05	SPUN ALUMINUM	LOREN COOK	PR-16	SEE BELOW

1. RELIEF VENT TO INCLUDE FACTORY ROOF CURB. COORDINATE ALL ROOF CURBS WITH THE ROOFING CONTRACTOR. PRIME AND PAINT ROOF CURB TO MATCH ROOF (VERIFY PAINT COLOR WITH OWNER).
2. RELIEF VENT TO INCLUDE BIRDSCREEN AND DAMPER.

APPROVED EQUALS: CARNES, GREENHECK, AND PENN

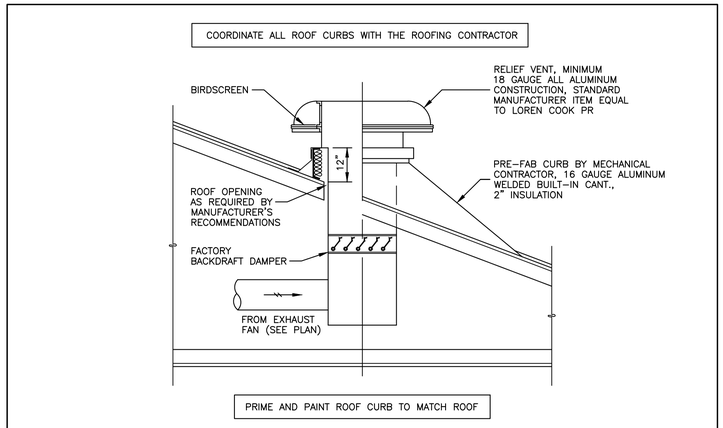

TYPICAL RELIEF VENT DETAIL

NOT TO SCALE

HVAC SCHEDULES AND DETAILS

SEAY SEAY & LITCHFIELD
1115 South Court Street
Montgomery, AL 36104
(334) 263-5162

Owner:
The Armory Commission of Alabama
1720 Cong WL Dickinson Drive
Montgomery, AL 36109

SS&L Job Number
14057

IFB Job Number
AC-22-B-0004-S

Date
JANUARY 2022

Drawn By
JH

Checked By
RDW

Revised

Project Title
NORTHPORT
FMS #9 RENOVATIONS
NORTHPORT, AL

Sheet Title
HVAC SCHEDULES AND DETAILS

Sheet Number
M1.3

WHORTON ENGINEERING, INC.
HVAC - PLUMBING - PROCESS CONTROL
RANDALL WHORTON, P.E.
PHONE: (256) 820-9897
25 SUMMERALL GATE ROAD
ANNISTON, ALABAMA 36205

WHORTON ENGINEERING PROJECT NO. 21108

ALABAMA No.14192 PROFESSIONAL ENGINEER RANDALL D WHORTON
01-10-2022

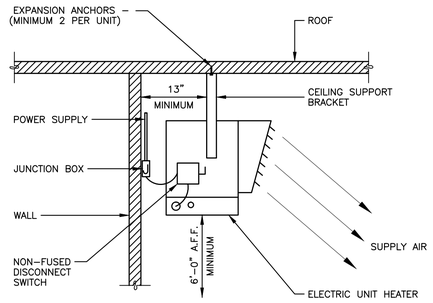

TYPICAL ELECTRIC UNIT HEATER MOUNTING DETAIL

NOT TO SCALE

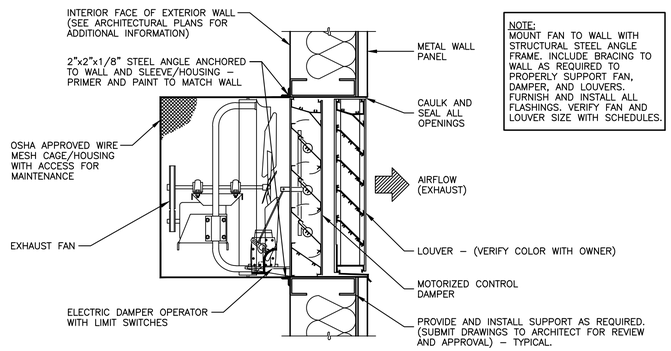

TYPICAL BELT DRIVEN WALL MOUNTED EXHAUST FAN WITH LOUVER / DAMPER DETAIL

NOT TO SCALE

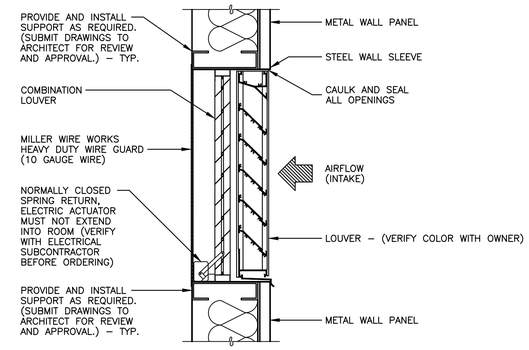

TYPICAL WALL MOUNTED AIR INTAKE LOUVER

NOT TO SCALE

STORAGE BUILDING ELECTRIC UNIT HEATER SCHEDULE

MARK NO.	MANUFACTURER (OR APPROVED EQUAL)	UNIT MODEL NO.	ELEMENT STAGES	ELECTRICAL DATA						AIR DELIVERY DATA			FAN MOTOR DATA			MAX MOUNTING HEIGHT	AIR THROW	UNIT WEIGHT (LBS.)	NOTES
				VOLTS	PHASE	K.W.	BTU/HR (000)	AMPS	CONTROL VOLTS	CFM	FPM	TEMP CHANGE (°F)	VOLTS	RPM	H.P.				
EUH 1	BERKO	HUHAA720	2	208	1	7.5	25.6	36	24	650	970	37°	208	1,600	1/30	9'–0"	18'–0"	38	SEE BELOW
EUH 2	BERKO	HUHAA720	2	208	1	7.5	25.6	36	24	650	970	37°	208	1,600	1/30	9'–0"	18'–0"	38	SEE BELOW

(1) UNIT TO INCLUDE DDC CONTROLS. HEATER SHALL INCLUDE HONEYWELL COMMUNICATING THERMOSTAT MODEL TB3026B. HEATERS SHALL BE INTERFACED TO FMS #9 BUILDING AUTOMATION SYSTEM.

(2) UNIT TO INCLUDE AUTOMATIC THERMAL CUTOUT.

(3) UNIT TO INCLUDE FACTORY MOUNTING BRACKETS.

APPROVED EQUALS: MARKEL, MODINE, QMARK, AND REZNOR.

STORAGE BUILDING LOUVER SCHEDULE

MARK NO.	MOUNTING	SIZE W X H	BLADE ANGLE	BLADE CENTERS	MIN. FREE AREA	MINIMUM FREE AREA SQ. FT.	MAXIMUM PRESSURE DROP IN W.G.	CFM	MODEL NO. DATA		NOTES
									MANUFACTURER (OR APPROVED EQUAL)	MODEL NO.	
L 1	SIDE WALL	36"X36"	45°	6.5"	40%	3.61	0.15	3,500	GREENHECK	EAC–601	(1) (2)
L 2	SIDE WALL	48"X40"	45°	6.0"	36%	4.78	0.10	3,500	GREENHECK	EACC–601	(1) (3) (4)

(1) LOUVER TO INCLUDE FLANGE FRAME AND KYNAR FINISH. VERIFY FINAL COLOR AND FINISH WITH OWNER. VERIFY QUANTITY WITH PLANS.

(2) L–1 LOUVER TO INCLUDE MOTORIZED DAMPER

(3) L–2 LOUVER TO INCLUDE MOTORIZED DAMPER CONCEALED IN EXTENDED LOUVER BASE (SIZE SCHEDULED INCLUDES EXTENDED BASE. FREE AREA SCHEDULED IS ACTUAL FREE AREA WITH CONCEALED DAMPER.)

(4) L–2 LOUVER TO INCLUDE MILLER WIREWORKS HEAVY DUTY WIRE GYM GUARD.

APPROVED EQUALS: RUSKIN AND UNITED ENERTECH.

STORAGE BUILDING EXHAUST FAN SCHEDULE

MARK NO.	MOUNTING	CFM	STATIC IN W.G.	SONES	H.P.	VOLTAGE	MANUFACTURER (OR APPROVED EQUAL)	MODEL NO.	WEIGHT (LBS.)	NOTES
EF 1	WALL	3,500	0.5	18.2	1	208–1–60	LOREN COOK	30XMWH	400	SEE BELOW

(1) FAN TO BE CONTROLLED WITH WALL MOUNTED THERMOSTAT AND SHALL INCLUDE LOCKING METAL GYM GUARD.

(2) FAN TO INCLUDE WALL COLLAR AND WIREGUARD–MOTOR SIDE

(3) FAN TO INCLUDE FACTORY DISCONNECT.

APPROVED EQUALS: BREIDERT, GREENHECK, AND PENN.

HVAC SCHEDULES AND DETAILS

WHORTON ENGINEERING, INC.
HVAC – PLUMBING – PROCESS CONTROL
RANDALL WHORTON, P.E.
PHONE: (256) 820–9897
25 SUMMERALL GATE ROAD
ANNISTON, ALABAMA 36205
WHORTON ENGINEERING PROJECT NO. 21108

ALABAMA No.14192 PROFESSIONAL ENGINEER RANDALL D WHORTON
01–10–2022

SEAY SEAY & LITCHFIELD
1115 South Court Street
Montgomery, AL 36104
(334) 263–5162

Owner:
The Armory Commission of Alabama
1720 Cong WL Dickinson Drive
Montgomery, AL 36109

SS&L Job Number
14057

IFB Job Number
AC–22–B–0004–S

Date
JANUARY 2022

Drawn By
JH

Checked By
RDW

Revised

Project Title
NORTHPORT
FMS #9 RENOVATIONS
NORTHPORT, AL

Sheet Title
HVAC SCHEDULES AND DETAILS

Sheet Number
M1.4

CONTRACTOR SHALL FURNISH AND INSTALL STRUCTURAL SUPPORTS REQUIRED TO INSTALL FAN IN ACCORDANCE TO INSTALL FAN IN ACCORDANCE WITH MANUFACTURER'S RECOMMENDATIONS. STRUCTURAL SUPPORTS SHALL BE SUBMITTED TO THE ARCHITECT FOR REVIEW AND APPROVAL.

BIG ASS FANS POWERFOIL D (OR APPROVED EQUAL) – SEE DESTRATIFICATION FAN SCHEDULE DF–1 AND DF–2 (10 FT. DIA.) AND DF–3 THRU DF–6 (8 FT. DIA.) FOR ADDITIONAL INFORMATION.

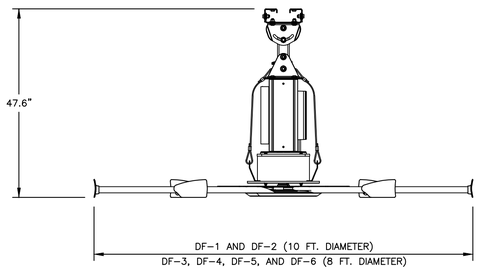

ELEVATION VIEW

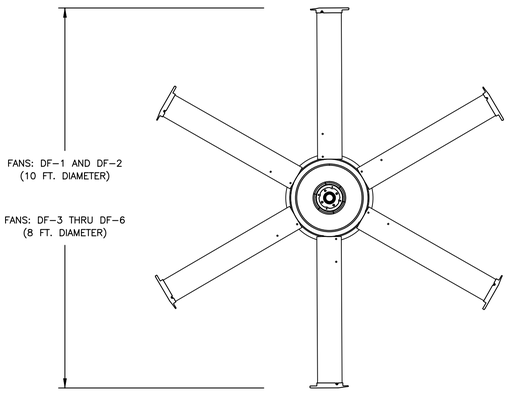

PLAN VIEW

DESTRATIFICATION FAN DETAILS

NOT TO SCALE

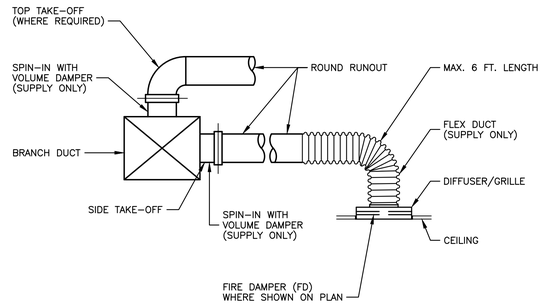

DIFFUSER / GRILLE RUNOUT DETAIL

NOT TO SCALE

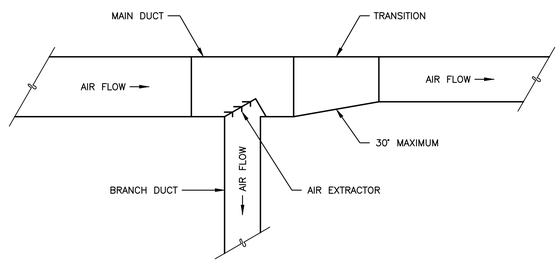

TYPICAL DUCT TAKE OFF DETAIL

NOT TO SCALE

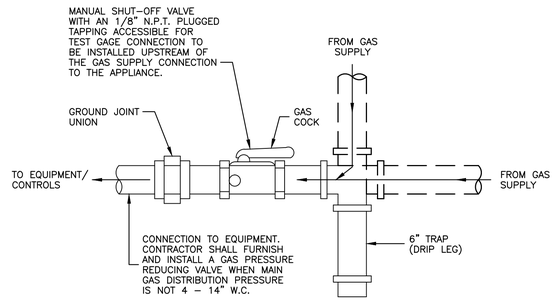

TYPICAL GAS CONNECTION TO EQUIPMENT DETAIL

NOT TO SCALE

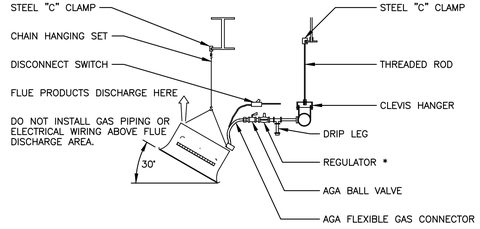

MAINTAIN ALL REQUIRED CLEARANCES AS SHOWN ON HEATER DATA PLATE. MANUFACTURER'S INSTRUCTIONS ARE TO TAKE PRECEDENCE WHEREVER ANY DISCREPANCY BETWEEN THOSE INSTRUCTIONS AND THIS SPECIFICATION MAY OCCUR.

*325–3 REGULATOR REQUIRED WHERE GAS SUPPLY PRESSURE EXCEEDS 14" WC.

TYPICAL GAS INFRA-RED HEATER INSTALLATION DETAIL

NOT TO SCALE

HVAC DETAILS

WHORTON ENGINEERING, INC.
HVAC – PLUMBING – PROCESS CONTROL
RANDALL WHORTON, P.E.
PHONE: (256) 820–9897
25 SUMMERALL GATE ROAD
ANNISTON, ALABAMA 36205

WHORTON ENGINEERING PROJECT NO. 21108

ALABAMA No.14192 PROFESSIONAL ENGINEER RANDALL D. WHORTON
01–10–2022

SEAY SEAY & LITCHFIELD
1115 South Court Street
Montgomery, AL 36104
(334) 263–5162

Owner:
The Armory Commission of Alabama
1720 Cong WL Dickinson Drive
Montgomery, AL 36109

SS&L Job Number
14057

IFB Job Number
AC–22–B–0004–S

Date
JANUARY 2022

Drawn By
JH

Checked By
RDW

Revised

Project Title
NORTHPORT
FMS #9 RENOVATIONS
NORTHPORT, AL

Sheet Title
HVAC DETAILS

Sheet Number
M2.1

1. CONTRACTOR SHALL FURNISH AND INSTALL STRUCTURAL SUPPORTS REQUIRED TO INSTALL FAN IN ACCORDANCE WITH MANUFACTURER'S RECOMMENDATIONS. STRUCTURAL SUPPORTS SHALL BE SUBMITTED TO THE ARCHITECT FOR REVIEW AND APPROVAL.
2. EQUIPMENT SUPPORTS SHALL BE COORDINATED WITH STRUCTURAL AND METAL BUILDING DESIGNER/SUPPLIER.
3. COORDINATE HANGING HEIGHT, CLEARANCE REQUIREMENTS, AND FINAL LOCATION OF FAN WITH EQUIPMENT AND OTHER SYSTEMS TO ENSURE PROPER OPERATION.

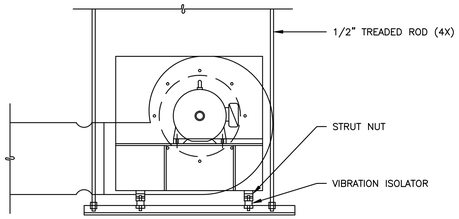

TYPICAL EXHAUST FAN HANGER DETAIL

NOT TO SCALE

EQUIPMENT SUPPORTS SHALL BE COORDINATED WITH STRUCTURAL AND METAL BUILDING DESIGNER/SUPPLIER.

UNIT SHALL BE SUPPORTED FROM STRUCTURE ABOVE WITH 1/2" THREADED ROD ON 60" MAX. CENTERS. 1-1/2" X 1-1/2" X 1/4" STEEL ANGLE BRACES/UNISTRUT SHALL BE INSTALLED TO RESTRICT/PREVENT LATERAL MOVEMENT.

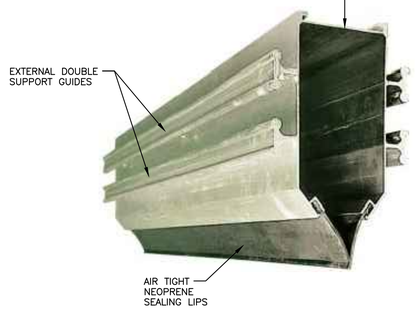

TYPICAL ARI-HETRA SLOTTED EXHAUST / SUCTION CHANNEL DETAIL

NOT TO SCALE

COORDINATE WITH DDC CONTROLS CONTRACTOR FOR COMPLETE INTERFACE TO THE BUILDING AUTOMATION SYSTEM.

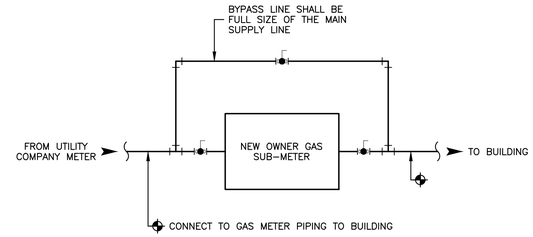

TYPICAL GAS SUB-METER PIPING DIAGRAM

NOT TO SCALE

1. INCLUDES (2) 56"H BRACKETS AND (14) 12" ARMS
2. 1,000 LBS EVENLY DISTRIBUTED WEIGHT
3. 150 LBS PER TIER
4. BRACKETS CAN BE MOUNTED AS FAR APART AS NEEDED
5. HEAVY DUTY GALVANIZED STEEL CONSTRUCTION
6. INCLUDES MOUNTING HARDWARE

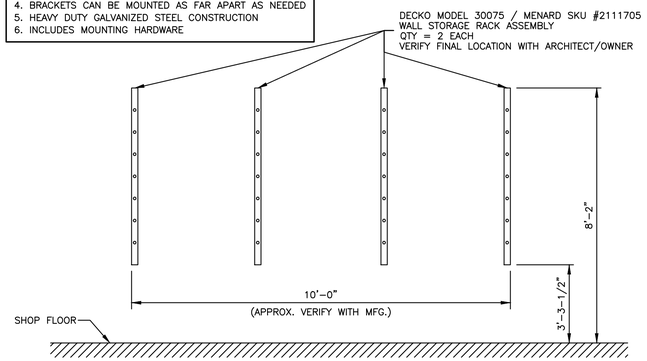

TYPICAL WALL MOUNTED HOSE RACK

NOT TO SCALE

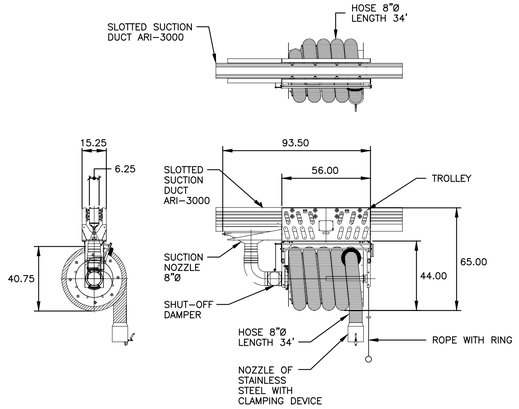

TYP. MOBILE HOSE REEL / SPRING DETAIL

NOT TO SCALE

1. MARK NO. – LABEL MARK NO. TO MATCH PLANS (EF-1. HP-1. WHP-1, ETC.)
2. UNIT DESCRIPTION – EXHAUST FAN, SPLIT SYSTEM, HEAT PUMP, WATER SOURCE HEAT PUMP, ETC.

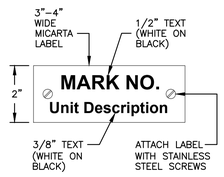

TYPICAL HVAC EQUIPMENT LABEL DETAIL

1. UNIT MARK NO. – LABEL WITH MARK NO. TO MATCH PLANS (TS-HP-1, TS-WHP-1, ETC.)

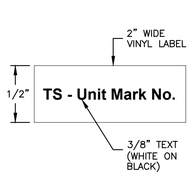

TYPICAL TEMP. SENSOR / THERMOSTAT LABEL DETAIL

NOTE: ALL LABELS SHALL BE RIGID PLASTIC. LABEL ALL DEVICES, DUCTWORK, PIPING, VALVES, SENSORS, ACTUATORS, ETC.

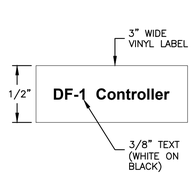

TYPICAL FAN CONTROLLER LABEL DETAIL

LABELING DETAILS

NOT TO SCALE

HVAC DETAILS

WHORTON ENGINEERING, INC.
HVAC – PLUMBING – PROCESS CONTROL
RANDALL WHORTON, P.E.
PHONE: (256) 820-9897
25 SUMMERALL GATE ROAD
ANNISTON, ALABAMA 36205

WHORTON ENGINEERING PROJECT NO. 21108

SEAY SEAY & LITCHFIELD
1115 South Court Street
Montgomery, AL 36104
(334) 263-5162

Owner:
The Armory Commission of Alabama
1720 Cong WL Dickinson Drive
Montgomery, AL 36109

SS&L Job Number
14057

IFB Job Number
AC-22-B-0004-S

Date
JANUARY 2022

Drawn By
JH

Checked By
RDW

Revised

Project Title
NORTHPORT
FMS #9 RENOVATIONS
NORTHPORT, AL

Sheet Title
HVAC DETAILS

Sheet Number
M2.2

ALABAMA LICENSED No.14192 PROFESSIONAL ENGINEER RANDALL D WHORTON
01-10-2022

GAS UNIT HEATER SEQUENCE OF OPERATIONS

GAS UNIT HEATERS: ARE STARTED AND STOPPED BY DIRECT DIGITAL CONTROLLERS ON A REAL TIME BASIS, IN ACCORDANCE WITH THE SPECIFIED SOFTWARE PROGRAMS. A SPACE SENSOR WILL MAINTAIN THE HEATING SET POINT BY ENERGIZING THE STAGES OF HEAT TO MAINTAIN DESIRED SPACE TEMPERATURE.

WHEN SYSTEM IS PLACED IN THE "UNOCCUPIED" MODE OF OPERATION, THE CONTROLS ARE ENERGIZED WHEN SPACE TEMPERATURE DROPS BELOW ITS NIGHT SET BACK HEATING TEMPERATURE DROPS BELOW ITS NIGHT SET BACK HEATING TEMPERATURE SET POINTS.

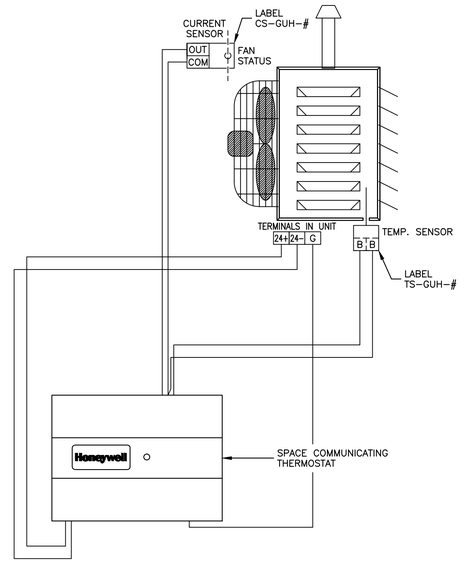

GAS UNIT HEATER CONTROLS DIAGRAM

NOT TO SCALE

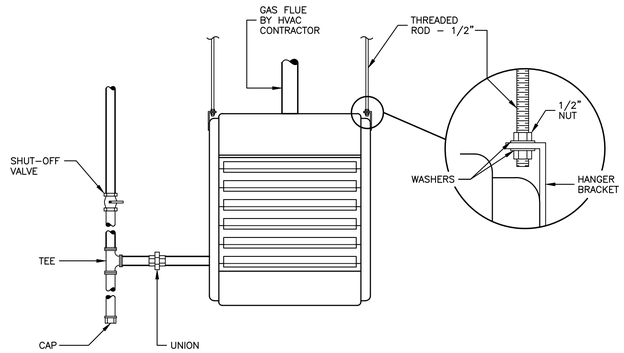

GAS-FIRED UNIT HEATER DETAIL

NOT TO SCALE

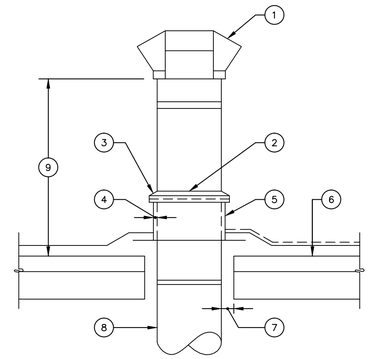

NOTES

1. UL–LISTED VENT CAP
2. STORM COLLAR
3. MASTIC OR CAULKING
4. 1/2" (13–MM) AIR SPACE
5. TALL CONE FLASHING
6. ROOF
7. 1–1/2" (38–MM) MINIMUM
8. UL–LISTED TYPE "B" VENT
9. HEIGHT AS REQUIRED BY CODE NOT LESS THAN 36" (91.5 CM)

GAS VENT THRU ROOF WITH VENT CAP DETAIL

NOT TO SCALE

GAS FIRED UNIT HEATER CONTROL SYSTEM POINT LIST

SYSTEM POINT DESCRIPTION / GAS FIRED UNIT HEATER	ANALOG INPUT: GRAPHIC	TEMPERATURE	PRESSURE	RH	KW	KWH	BTU HR	GPM	PERCENT	CFM	SETPOINT	ANALOG OUTPUT: DDC (4–20MA, 0–10VDC)	SETPOINT ADJ.	BINARY INPUT: PNEU. TRANSDUCER	STATUS ON/OFF	FILTER STATUS	STATUS OPEN/CLOSED	STATUS	NO. OF STARTS	TIMED OVERRIDE	BINARY OUTPUT: STATUS ON/OFF	OPEN/CLOSE	LOCK OUT	ENABLE/DISABLE	SYSTEMS FEATURES ALARMS: HIGH ANALOG	LOW ANALOG	HIGH BINARY	LOW BINARY	PROOF	SENSOR FAIL	FLOW FAIL	COMM. FAIL	DIAGNOSTICS	PROGRAMS: TIME SCHEDULING	OPTIMAL START/STOP	DEMAND LIMITING	RESET	EVENT PROGRAM	DDC	ALARM INSTRUCT	MAINT. WK. ORD.	RUN TIME	EXP. MESSAGE	SET BACK/SET UP	NOTES
HEATER ENABLE/DISABLE	X											X																																
SPACE TEMPERATURE	X	X									X																																	
SUPPLY FAN	X														X						X										X													
DISCHARGE TEMPERATURE	X	X																							X	X				X														

1. SET SPACE SENSOR TO ALLOW MANUAL ADJUSTMENT OF UP TO TWO DEGREES PLUS/MINUS.
2. FIELD VERIFY EXACT QUANTITY AND LOCATION.
3. UNIT TO INCLUDE DDC CONTROLS. HEATER SHALL INCLUDE HONEYWELL COMMUNICATING THERMOSTAT MODEL TB3026B. HEATERS SHALL BE FULLY INTERFACED TO THE BUILDING AUTOMATION SYSTEM.
4. APPROXIMATELY SEVEN (7) EXISTING GAS UNIT HEATERS. FIELD VERIFY QUANTITY WITH PLANS.

HVAC DETAILS

WHORTON ENGINEERING, INC.
HVAC – PLUMBING – PROCESS CONTROL
RANDALL WHORTON, P.E.
PHONE: (256) 820-9897
25 SUMMERALL GATE ROAD
ANNISTON, ALABAMA 36205

WHORTON ENGINEERING PROJECT NO. 21108

SEAY SEAY & LITCHFIELD
1115 South Court Street
Montgomery, AL 36104
(334) 263-5162

Owner:
The Armory Commission of Alabama
1720 Cong WL Dickinson Drive
Montgomery, AL 36109

SS&L Job Number
14057

IFB Job Number
AC-22-B-0004-S

Date
JANUARY 2022

Drawn By
JH

Checked By
RDW

Revised

Project Title
NORTHPORT
FMS #9 RENOVATIONS
NORTHPORT, AL

Sheet Title
HVAC DETAILS

Sheet Number
M2.3

ALABAMA No.14192 PROFESSIONAL ENGINEER RANDALL D. WHORTON
01-10-2022

EXHAUST FAN CONTROL SYSTEM POINT LIST

SYSTEM POINT DESCRIPTION	GRAPHIC	ANALOG INPUT: TEMPERATURE	PRESSURE	RH	KW	KWH	BTU HR	GPM	PERCENT	CFM	SETPOINT	ANALOG OUTPUT: DDC (4-20MA, 0-10VDC)	SETPOINT ADJ.	BINARY INPUT: PNEU. TRANSDUCER	STATUS ON/OFF	FILTER STATUS	STATUS OPEN/CLOSED	STATUS	NO. OF STARTS	TIMED OVERRIDE	BINARY OUTPUT: OFF/ON	OPEN/CLOSE	LOCK OUT	ENABLE/DISABLE	LOCAL/REMOTE	SYSTEMS FEATURES ALARMS: HIGH ANALOG	LOW ANALOG	HIGH BINARY	LOW BINARY	PROOF	SENSOR FAIL	FLOW FAIL	COMM. FAIL	DIAGNOSTICS	PROGRAMS: TIME SCHEDULING	OPTIMAL START/STOP	DEMAND LIMITING	RESET	EVENT PROGRAM	DDC	ALARM INSTRUCT	MAINT. WK. ORD.	RUN TIME	EXP. MESSAGE	SET BACK/SET UP	NIGHT PURGE	TENANT BILLING	NOTES
EXHAUST FAN																																															
CONTROL PANEL	X											X						X						X									X				X				X					

GAS INFRARED UNIT HEATER CONTROL SYSTEM POINT LIST

SYSTEM POINT DESCRIPTION	GRAPHIC	ANALOG INPUT: TEMPERATURE	PRESSURE	RH	KW	KWH	BTU HR	GPM	PERCENT	CFM	SETPOINT	ANALOG OUTPUT: DDC (4-20MA, 0-10VDC)	SETPOINT ADJ.	BINARY INPUT: PNEU. TRANSDUCER	STATUS ON/OFF	FILTER STATUS	STATUS OPEN/CLOSED	STATUS	NO. OF STARTS	TIMED OVERRIDE	BINARY OUTPUT: OFF/ON	OPEN/CLOSE	LOCK OUT	ENABLE/DISABLE	LOCAL/REMOTE	SYSTEMS FEATURES ALARMS: HIGH ANALOG	LOW ANALOG	HIGH BINARY	LOW BINARY	PROOF	SENSOR FAIL	FLOW FAIL	COMM. FAIL	DIAGNOSTICS	PROGRAMS: TIME SCHEDULING	OPTIMAL START/STOP	DEMAND LIMITING	RESET	EVENT PROGRAM	DDC	ALARM INSTRUCT	MAINT. WK. ORD.	RUN TIME	EXP. MESSAGE	SET BACK/SET UP	NIGHT PURGE	TENANT BILLING	NOTES
INFRARED GAS UNIT HEATER																																														
CONTROL PANEL	X											X						X						X						X			X				X				X					
SPACE TEMP.	X	X									X																																			
DISCHARGE TEMP.	X	X																																												

(1) SET SPACE SENSOR TO ALLOW MANUAL ADJUSTMENT OF UP TO TWO DEGREES PLUS/MINUS.

(2) UNIT TO INCLUDE BLACK BULB SENSOR AND HONEYWELL COMMUNICATING THERMOSTAT MODEL TB3026B. HEATERS SHALL BE FULLY INTERFACED TO THE BUILDING AUTOMATION SYSTEM.

EXHAUST FAN CONTROL RELAYS SHALL BE WIRED TO THE NORMALLY CLOSED CONTACTS TO ALLOW THE FANS TO OPERATE IN THE EVENT THAT THE DDC CONTROLS ARE OFFLINE. EXHAUST FANS SHALL BE CONTROLLED BY THE BUILDING SCHEDULE.

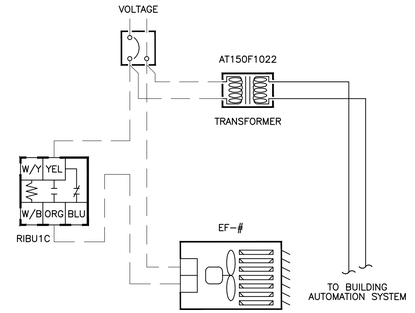

EXHAUST FAN CONTROLS DIAGRAM

NOT TO SCALE

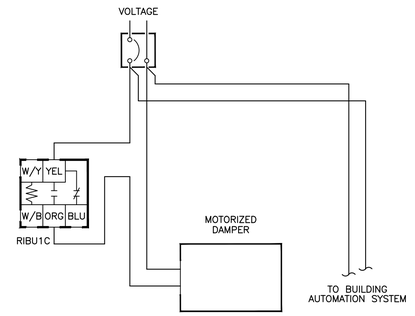

MOTORIZED LOUVER CONTROLS DIAGRAM

NOT TO SCALE

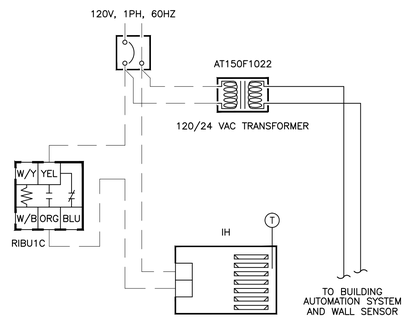

TYPICAL GAS INFRARED UNIT HEATER / IH CONTROL

NOT TO SCALE

SEQUENCE OF OPERATIONS

GAS INFRA-RED UNIT HEATERS ARE STARTED AND STOPPED BY DIRECT DIGITAL CONTROLLERS ON A REAL TIME BASIS, IN ACCORDANCE WITH THE SPECIFIED SOFTWARE PROGRAMS.

A SPACE SENSOR WILL MAINTAIN THE HEATING SET POINT BY ENERGIZING THE STAGES OF HEAT TO MAINTAIN DESIRED SPACE TEMPERATURE.

WHEN SYSTEM IS PLACED IN THE "UNOCCUPIED" MODE OF OPERATION, THE CONTROLS ARE ENERGIZED WHEN SPACE TEMPERATURE DROPS BELOW ITS NIGHT SET BACK HEATING TEMPERATURE SET POINTS.

(T) = DISCHARGE AIR TEMPERATURE SENSOR

HVAC DETAILS

SEAY SEAY & LITCHFIELD
1115 South Court Street
Montgomery, AL 36104
(334) 263-5162

Owner:
The Armory Commission of Alabama
1720 Cong WL Dickinson Drive
Montgomery, AL 36109

SS&L Job Number
14057

IFB Job Number
AC-22-B-0004-S

Date
JANUARY 2022

Drawn By
JH

Checked By
RDW

Revised

Project Title
NORTHPORT
FMS #9 RENOVATIONS
NORTHPORT, AL

Sheet Title
HVAC DETAILS

Sheet Number
M2.4

WHORTON ENGINEERING, INC.
HVAC - PLUMBING - PROCESS CONTROL
RANDALL WHORTON, P.E.
PHONE: (256) 820-9897
25 SUMMERALL GATE ROAD
ANNISTON, ALABAMA 36205

WHORTON ENGINEERING PROJECT NO. 21108

ALABAMA No.14192 PROFESSIONAL ENGINEER RANDALL D. WHORTON
01-10-2022

REFERENCE PLANS FOR LOCATION AND QUANTITY REQUIRED

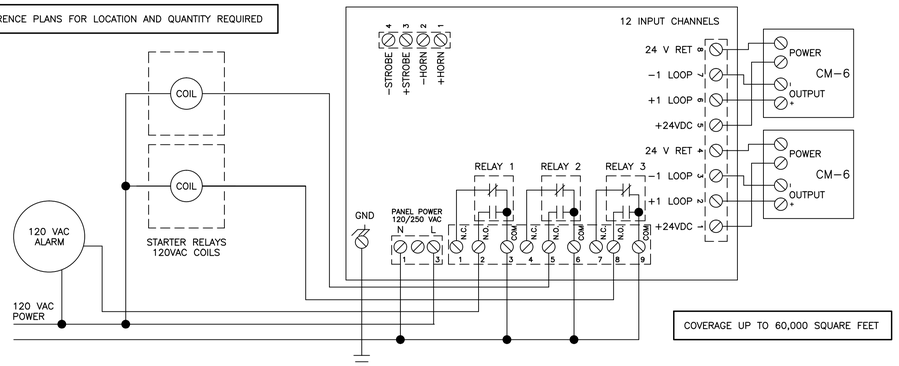

COVERAGE UP TO 60,000 SQUARE FEET

CARBON MONOXIDE CONTROL PANEL (MACURCO DVP-120) TYP. CONNECTION DIAGRAM

(OR APPROVED EQUAL) NOT TO SCALE

REFERENCE PLANS FOR LOCATION AND QUANTITY REQUIRED

TYPICAL COVERAGE 5,000 SQUARE FEET

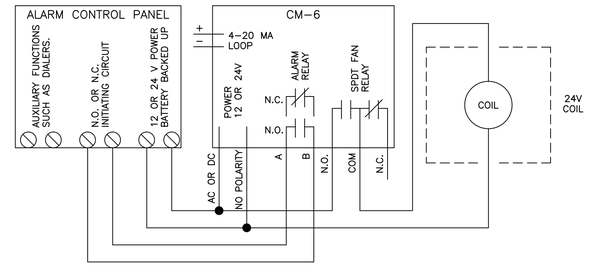

CARBON MONOXIDE DETECTOR (MACURCO CM-6) TYP. CONNECTION DIAGRAM

(OR APPROVED EQUAL) NOT TO SCALE

DDC SYSTEM NOTES

1. INTERFACE ALL EQUIPMENT INTO THE EXISTING BUILDING AUTOMATION SYSTEM. GRAPHICS, FLOOR PLANS, EQUIPMENT GRAPHICS, ETC. SHALL BE PROVIDED IN THE BUILDING AUTOMATION SYSTEM TO COORDINATE WITH PLANS.
2. ALL UNITS SHALL BE PROGRAMMED FOR OCCUPIED MODE, OCCUPIED STANDBY, AND UNOCCUPIED MODE. NEW LIGHTING OCCUPANCY SENSORS SHALL BE TIED INTO BUILDING AUTOMATION SYSTEM TO PLACE UNITS IN OCCUPIED MODE, OCCUPIED STANDBY MODE, OR UNOCCUPIED MODE.
3. BUILDING AUTOMATION CONTRACTOR SHALL INSTALL GAS SUB-METER FOR INTERFACE WITH THE BUILDING AUTOMATION SYSTEM TO OBTAIN TOTAL ENERGY ON THE BUILDING. GAS SUB-METER PULSE OUTPUTS SHALL BE CONNECTED TO POWER METER PULSE INPUTS.
4. GAS PRESSURE TO THE BUILDING SHALL BE MEASURED BY LOCAL UTILITY. COORDINATE SUB-METER INSTALLATION WITH LOCAL OFFICE. REFERENCE PLUMBING PLANS FOR METER LOCATION.
5. INSTALLATION OF GAS SUB-METERS SHALL INCLUDE METER BYPASS. BYPASS PIPING SHALL BE FULL SIZE OF PIPE MAIN AND SHALL INCLUDE ISOLATION VALVES.
6. ALL EXHAUST FANS, SUPPLY FANS, ETC. SHALL BE INTERFACED TO THE BUILDING AUTOMATION SYSTEM. BUILDING AUTOMATION SYSTEM SHALL BE CAPABLE OF ON/OFF CONTROL OF FANS.
7. ALL NEW FRESH AIR MOTORIZED DAMPERS SHALL BE CONTROLLED BY THE BUILDING AUTOMATION SYSTEM WITH OCCUPANCY SCHEDULE.
8. ALL CONTROLS COMPONENTS INCLUDING SENSORS, DAMPERS, ETC. SHALL BE LABELED TO MATCH CONTROL DRAWINGS.
9. ALL I.P. ADDRESSES SHALL BE LABELED.
10. ALL CONTROL PANELS SHALL BE LABELED.
11. LAMINATED CONTROL DRAWINGS SHALL BE INSTALLED AT CONTROL JACE PANELS.
12. ALL JACE CONTROL PANELS SHALL INCLUDE BATTERY BACKUP UPS.
13. EXHAUST FAN CONTROL RELAYS SHALL BE WIRED TO THE NORMALLY CLOSED CONTACTS TO ALLOW THE FANS TO OPERATE IN THE EVENT THAT THE DDC CONTROLS ARE OFFLINE. EXHAUST FANS SHALL BE CONTROLLED BY THE BUILDING SCHEDULE.
14. COORDINATE DDC CONTROLLER TERMINAL ASSIGNMENTS WITH AANG DDC STANDARDS AND PRACTICES.
15. DDC CONTROLS AS-BUILT DRAWINGS SHALL INCLUDE COLOR CODES FOR ALL MULTI-CONDUCTOR CABLES.
16. CARBON MONOXIDE DETECTORS SHALL BE MACURCO MODEL CM-6 (OR APPROVED EQUAL).
17. ALL COMPONENTS REQUIRED FOR THE SEQUENCES OF OPERATION, SHOWN AND/OR DESCRIBED ON THE CONTROL DIAGRAMS AND/OR SPECIFICATIONS, OR AS REQUIRED FOR A PROPERLY OPERATING SYSTEM SHALL BE FURNISHED AND INSTALLED BY THE FMS CONTRACTOR UNLESS OTHERWISE NOTED.
18. ALL CONTROL DEVICES SHOWN ON THE CONTROL DIAGRAMS SHALL BE FURNISHED BY THE FMS CONTRACTOR UNLESS OTHERWISE NOTED OR SPECIFIED.
19. FMS CONTRACTOR IS RESPONSIBLE TO FURNISH, INSTALL, AND WIRE ALL COMPONENTS REQUIRED FOR INTEGRATION OF INFORMATION SHOWN TO BE ACCESSED BY THE FMS FROM OTHER SYSTEMS AND EQUIPMENT UNLESS OTHERWISE BE NOTED OR SPECIFIED.
20. ALL POWER WIRING AND TRANSFORMERS FOR SENSORS, ACTUATORS, AND OTHER CONTROL COMPONENTS AS REQUIRED FOR THE FMS AND/OR DDC SYSTEMS TO FUNCTION PROPERLY, SHALL BE FURNISHED AND INSTALLED BY THE FMS CONTRACTOR UNLESS OTHERWISE SHOWN, NOTED, OR SPECIFIED.
21. ALL POWER WIRING FOR SENSORS, ACTUATORS, AND OTHER DEVICES SHALL BE FROM THE DDC PANEL OR THE FMS/BAS PANEL OF THE ASSOCIATED SYSTEM.
22. ALL CONTROL, INTERLOCK, AND POWER WIRING SHALL BE INSTALLED PER THE ELECTRICAL SPECIFICATION, LOCAL, STATE, AND NATIONAL CODES. RACEWAY SHALL BE INSTALLED PER THE ELECTRICAL SPECIFICATIONS.
23. ALL CONTROL POINTS SHOWN ON THE CONTROL DIAGRAMS SHALL BE PROVIDED AND INTEGRATED INTO A FMS/BAS SYSTEM GRAPHIC REPRESENTATIVE OF THE CONTROL DIAGRAMS.
24. ALL CONTROL BANDS, SETPOINTS, SETPOINT LIMITS, SETPOINT INCREMENT VALUES, SETPOINT DECREMENT VALUES, ALARM LIMITS, AND OTHER PARAMETERS SHALL BE ADJUSTABLE FROM THE FMS/BAS.
25. ALL SETPOINTS SHALL BE ADJUSTABLE FROM THE FMS/BAS SYSTEM GRAPHIC(S).
26. SPACE SETPOINTS SHALL BE ADJUSTABLE FROM THE ROOM SENSOR UNLESS OTHERWISE SHOWN ON DRAWINGS OR SPECIFIED.
27. THE FMS/BAS SYSTEM GRAPHICS SHALL BE LINKED WITH ASSOCIATED BUILDING FLOOR PLANS FROM THE SPACE SENSOR OR AREA SERVED.
28. WHERE ONE SYSTEM IS ASSOCIATED WITH ANOTHER SYSTEM, THE SYSTEM GRAPHIC SHALL BE LINKED TO THE ASSOCIATED GRAPHIC AS WELL AS THE BUILDING FLOOR PLAN GRAPHIC. EXAMPLE – A WATER SOURCE/GEOTHERMAL HEAT PUMP UNIT SYSTEM GRAPHIC SHALL BE LINKED TO THE LOOP WATER SYSTEM GRAPHIC IN ADDITION TO BOTH BEING LINKED TO THE BUILDING FLOOR PLAN.
29. THE BUILDING FLOOR PLAN SHALL DISPLAY THE SPACE TEMPERATURE AT EACH SPACE SENSOR LOCATION WITH AREA SERVED DISPLAYED IN SEPARATE COLORS BASED ON THE CONDITION OF THE ZONE. EXAMPLE – ALARM, NORMAL, HIGH OR LOW TEMPERATURE, HIGH OR LOW HUMIDITY, ETC.
30. ALL BUILDING FLOOR PLANS AND SYSTEM GRAPHICS SHALL DISPLAY OUTSIDE AIR TEMPERATURE AND HUMIDITY.
31. THE FLOOR PLAN GRAPHICS SHALL BE LINKED TO A BUILDING GRAPHIC WITH A DIGITAL PHOTOGRAPH BACKGROUND OF THE ACTUAL BUILDING. DURING CONSTRUCTION A TEMPORARY GRAPHICS MAY BE USED THAT IS REPRESENTATIVE OF THE BUILDING.
32. ALL GRAPHICS SHALL BE SUBMITTED IN COLOR WITH THE FMS/BAS SUBMITTAL.
33. AN AUDIBLE ALARM SHALL BE PROVIDED OUTSIDE THE BATTERY ROOM THAT WILL SOUND WHEN THE EMERGENCY EYEWASH STATION IS IN USE.
34. UPGRADE EXISTING JACE TO WEB 8000 WITH LATEST SOFTWARE.
35. BUILDING SHALL INCLUDE HONEYWELL WEB-HMI WITH CAPACITIVE TOUCHSCREEN SIZE 21". TOUCHSCREEN SHALL BE MOUNTED AT EXISTING JACE. VERIFY FINAL LOCATION WITH ARCHITECT/ENGINEER PRIOR TO INSTALLATION. TOUCHSCREEN SHALL DISPLAY ALL UNITS (NEW AND EXISTING) ON THE BUILDING AUTOMATION SYSTEM. TOUCHSCREEN SHALL DISPLAY UNIT, AREA SERVED, SPACE TEMPERATURE, AND SPACE TEMPERATURE SETPOINT. TOUCHSCREEN SHALL ALLOW ADJUSTMENT OF SPACE TEMPERATURE.

BUILDING AUTOMATION SYSTEM INTER-TRADE RESPONSIBILITY MATRIX

FMS = FACILITY MANAGEMENT SYSTEM/BUILDING AUTOMATION SYSTEM CONTRACTOR
23 = DIVISION 23 CONTRACTOR (PLUMBING OR HVAC)
26 = DIVISION 26 CONTRACTOR (ELECTRICAL OR FIRE ALARM CONTRACTOR)

	WORK	FURNISH	INSTALL	LOW VOLTAGE WIRE AND CONDUIT	LINE POWER AND CONDUIT
1	AUTOMATION DAMPERS	FMS	23	FMS	FMS
2	MANUAL VALVES, DAMPERS	23	23		
3	AUTOMATIC VALVES	FMS	23	FMS	FMS
4	THERMOSTATS AND HUMIDISTATS	FMS	FMS	FMS	
5	FMS LOW VOLTAGE AND COMMUNICATION WIRING	FMS	FMS	FMS	
6	FMS CONDUITS AND RACEWAY	FMS	FMS	FMS	
7	CONTROL RELAYS	FMS	FMS	FMS	
8	FMS NETWORK ROUTERS, BRIDGES, HUBS AND ASSOCIATED CABLING	FMS	FMS	FMS	
9	FMS NODES, EQUIPMENT, HOUSINGS, ENCLOSURES AND PANELS AND POWER FROM DIV. 16 PANELS	FMS	FMS	FMS	FMS
10	THERMOSTAT/HUMIDISTAT/CO2 DETECTOR FOR CONTROL OF FRESH AIR MOTORIZED DAMPERS	FMS	23	FMS	FMS
11	FMS SOFTWARE, FIRMWARE AND PROJECT SPECIFIC SOFTWARE CONFIGURATIONS AND DATABASE ENTRIES	FMS	FMS	FMS	
12	UNIT HEATER CONTROLLERS	FMS	FMS	FMS	26
13	ELECTRIC WALL HEATERS AND CEILING HEATER CONTROLLERS	23	23	26	26
14	MOTORIZED DAMPERS	FMS	23	FMS	FMS
15	EXHAUST FAN CONTROLS AND SUPPLY FAN CONTROLS	FMS	FMS	FMS	26
16	GAS SUB-METERS	FMS	FMS	FMS	
16	CARBON MONOXIDE DETECTOR/ALARM	FMS	FMS	FMS	

1. SMOKE DETECTORS MUST BE COORDINATED WITH THE FIRE ALARM CONTRACTOR.
2. THE ABOVE MATRIX IS FURNISHED BY THE ENGINEER OF RECORD AS A GUIDE FOR THE CONTRACTOR'S USE. THE CONTRACTOR SHALL SUBMIT A RESPONSIBILITY MATRIX BASED UPON THE CONTRACTOR'S PROJECT COORDINATION AND BID PREPARATION. THE CONTRACTOR SHALL PREPARE AND SUBMIT A FINAL MATRIX OF THE COORDINATED RESPONSIBILITIES OF THE REQUIRED TRADES WITH PROJECT SUBMITTALS AND SUB-CONTRACTORS IDENTIFIED BY NAME, ADDRESS, ETC.

HVAC DETAILS

WHORTON ENGINEERING, INC.
HVAC – PLUMBING – PROCESS CONTROL
RANDALL WHORTON, P.E.
PHONE: (256) 820-9897
25 SUMMERALL GATE ROAD
ANNISTON, ALABAMA 36205

WHORTON ENGINEERING PROJECT NO. 21108

ALABAMA No.14192 PROFESSIONAL ENGINEER RANDALL D. WHORTON
01-10-2022

SEAY SEAY & LITCHFIELD
1115 South Court Street
Montgomery, AL 36104
(334) 263-5162

Owner:
The Armory Commission of Alabama
1720 Cong WL Dickinson Drive
Montgomery, AL 36109

SS&L Job Number
14057

IFB Job Number
AC-22-B-0004-S

Date
JANUARY 2022

Drawn By
JH

Checked By
RDW

Revised

Project Title
NORTHPORT
FMS #9 RENOVATIONS
NORTHPORT, AL

Sheet Title
HVAC DETAILS

Sheet Number
M2.5

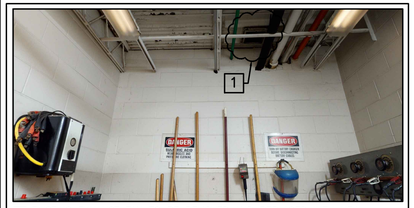

1 EXISTING EXHAUST FAN TO BE REMOVED AND REPLACED WITH NEW. (SEE M4.1) PATCH/REPAIR ALL SURFACES TO MATCH EXISTING FINISHES.

1 M3.1 **BATTERY ROOM**

NOT TO SCALE

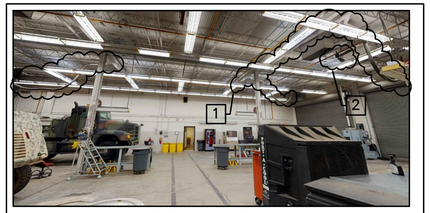

1 EXISTING VEHICLE EXHAUST TO BE REMOVED AND REPLACED WITH NEW. SEE REVISED FOR NEW LOCATIONS. PATCH/REPAIR ALL SURFACES TO MATCH EXISTING FINISHES.

2 EXISTING FANS TO BE REMOVED AND REPLACED WITH NEW. (SEE REVISED FOR NEW LOCATION.) PATCH/REPAIR ALL SURFACES TO MATCH EXISTING FINISHES.

2 M3.1 **OPEN BAY 1-6**

NOT TO SCALE

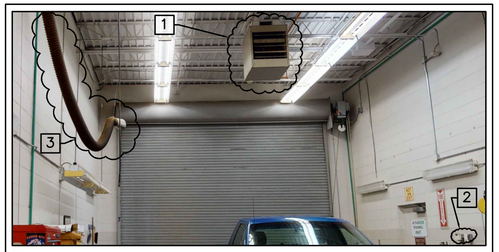

1 EXISTING VEHICLE EXHAUST TO BE REMOVED. PATCH/REPAIR ALL SURFACES TO MATCH EXISTING FINISHES.

2 EXISTING THERMOSTAT TO BE REMOVED AND RELOCATED. (SEE REVISED FOR NEW LOCATION.) PATCH/REPAIR ALL SURFACES TO MATCH EXISTING FINISHES.

3 EXISTING VEHICLE EXHAUST TO BE REMOVED. PATCH/REPAIR ALL SURFACES TO MATCH EXISTING FINISHES.

3 M3.1 **BAY 7**

NOT TO SCALE

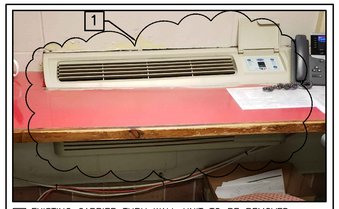

1 EXISTING CARRIER THRU WALL UNIT TO BE REMOVED. PATCH/REPAIR ALL SURFACES TO MATCH EXISTING FINISHES.

4 M3.1 **REAR OFFICE**

NOT TO SCALE

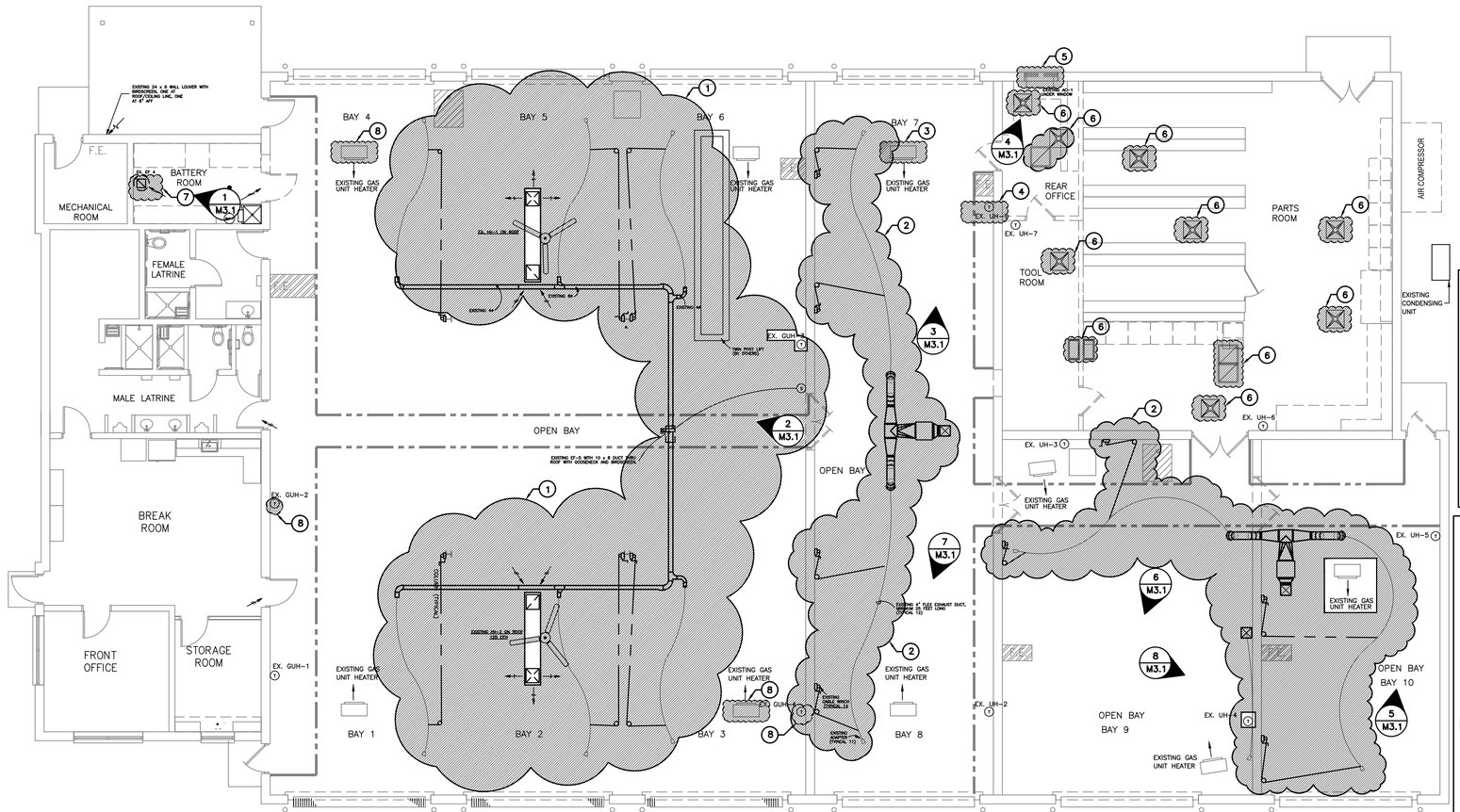

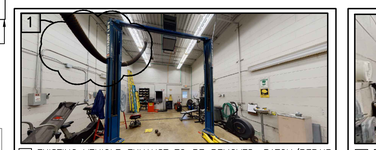

1 EXISTING VEHICLE EXHAUST TO BE REMOVED. PATCH/REPAIR ALL SURFACES TO MATCH EXISTING FINISHES.

5 M3.1 **BAY 10**

NOT TO SCALE

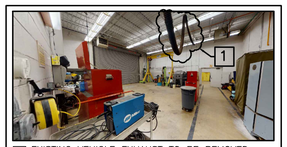

1 EXISTING VEHICLE EXHAUST TO BE REMOVED. PATCH/REPAIR ALL SURFACES TO MATCH EXISTING FINISHES.

6 M3.1 **BAY 9**

NOT TO SCALE

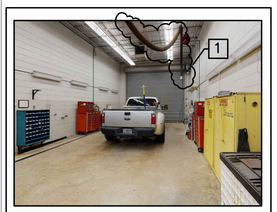

1 EXISTING VEHICLE EXHAUST TO BE REMOVED. PATCH/REPAIR ALL SURFACES TO MATCH EXISTING FINISHES.

7 M3.1 **BAY 7**

NOT TO SCALE



1 EXISTING VEHICLE EXHAUST TO BE REMOVED. PATCH/REPAIR ALL SURFACES TO MATCH EXISTING FINISHES.

8 M3.1 **BAY 9**

NOT TO SCALE

EXISTING CONDITIONS DRAWING IS FOR REFERENCE PURPOSES ONLY. DEMOLITION IS SHOWN. OTHER NOTES ON PLANS APPLY TO PREVIOUS PROJECTS AND DO NOT REPRESENT NEW WORK EXCEPT AS SHOWN ON REVISED PLANS. FIELD VERIFY ALL EXISTING CONDITIONS PRIOR TO BEGINNING ANY WORK.

N E S W

HVAC DEMOLITION PLAN

SCALE: 1/8" = 1'-0"

0" 4" 16'

BAR SCALE

HVAC DEMOLITION NOTES

1. EXISTING VEHICLE EXHAUST AND SMALL DESTRATIFICATION FANS TO BE REMOVED AND REPLACED WITH NEW. (SEE REVISED FOR NEW LOCATION.) PATCH/REPAIR ALL SURFACES TO MATCH EXISTING FINISHES.
2. EXISTING VEHICLE EXHAUST TO BE REMOVED. PATCH/REPAIR ALL SURFACES TO MATCH EXISTING FINISHES.
3. EXISTING GAS UNIT HEATER TO BE REMOVED AND RELOCATED. (SEE REVISED FOR NEW LOCATION.) PATCH/REPAIR ALL SURFACES TO MATCH EXISTING FINISHES.
4. EXISTING THERMOSTAT TO BE REMOVED AND RELOCATED. (SEE REVISED FOR NEW LOCATION.) PATCH/REPAIR ALL SURFACES TO MATCH EXISTING FINISHES.
5. EXISTING CARRIER THRU WALL UNIT TO BE REMOVED. PATCH/REPAIR ALL SURFACES TO MATCH EXISTING FINISHES.
6. EXISTING SUPPLY DIFFUSERS, RETURN AND TRANSFER GRILLES TO BE REMOVED AND REPLACED WITH NEW. (SEE REVISED FOR NEW LOCATION.) PATCH/REPAIR ALL SURFACES TO MATCH EXISTING FINISHES. ALL NEW DIFFUSERS/GRILLES SHALL BE TESTED AND BALANCED.
7. EXISTING EXHAUST TO BE REMOVED AND REPLACED WITH NEW. EXISTING GRILLE TO BE REUSED. (SEE REVISED.) PATCH/REPAIR ALL SURFACES TO MATCH EXISTING FINISHES.
8. EXISTING GAS UNIT HEATER AND THERMOSTAT TO BE REMOVED. PATCH/REPAIR ALL SURFACES TO MATCH EXISTING FINISHES.

VERIFY DISPOSAL OF EXISTING EQUIPMENT WITH OWNER

GENERAL:

1. CONTRACTOR SHALL FIELD VERIFY ALL EXISTING CONDITIONS AND EQUIPMENT PRIOR TO BIDDING. THIS SHALL INCLUDE ALL ITEMS TO BE REMOVED OR RELOCATED, ALL ELECTRICAL, ALL REFRIGERANT PIPING, CONTROLS, ETC.
2. PATCH/REPAIR ALL OPENINGS LEFT ABANDONED DUE TO THE REMOVAL OF ALL EQUIPMENT (UNIT,DUCT, PIPING, ELECTRICAL, ETC.) PATCH/REPAIR ALL SURFACES TO MATCH EXISTING.
3. REMOVE ALL ABANDONED PIPING, CONDUIT, ELECTRICAL, ETC. PATCH/REPAIR ALL HOLES, ETC. TO MATCH EXISTING FINISHES.
4. VERIFY DISPOSITION OF ALL EQUIPMENT WITH OWNER. INCLUDE ALL COSTS ASSOCIATED WITH COMPLETE REMOVAL AND DISPOSAL IN ACCORDANCE WITH CITY, STATE, AND FEDERAL REGULATIONS.
5. REPAIR/REPLACE ANY EXISTING EQUIPMENT DAMAGED DURING DEMOLITION.
6. PATCH/REPAIR WALLS, FLOOR, CEILING, ETC. TO MATCH EXISTING.
7. PROTECT ALL EXISTING BUILDINGS AND WORK TO REMAIN, INCLUDING ALL EXISTING STRUCTURE, FINISHES, AND MATERIALS AT ALL TIMES FROM DAMAGE DUE TO WORK UNDER THIS CONTRACT OR FROM DAMAGE DUE TO EXPOSURE TO THE ELEMENTS. ANY SUCH DAMAGE WILL BE REPAIRED, PATCHED, OR REPLACED TO MATCH ORIGINAL EXISTING CONDITION.
8. TEMPORARILY REMOVE EXISTING ITEMS TO REMAIN IF REQUIRED TO PROPERLY INSTALL NEW WORK. UPON COMPLETION OF DEMOLITION OR NEW WORK, RE-INSTALL SUCH REMOVED ITEMS TO MATCH ORIGINAL EXISTING CONDITION.
9. ALL BIDDERS SHALL VISIT THE JOB SITE PRIOR TO SUBMITTING A BID TO DETERMINE THE TOTAL SCOPE OF WORK AND TO COMPLETELY FAMILIARIZE THEMSELVES WITH THE PROJECT. INCLUDE ALL EXISTING CONDITIONS, BUILDINGS, STRUCTURE, FINISHES, AND MATERIALS IN ALL AREAS AFFECTED BY WORK UNDER THIS CONTRACT.

WHORTON ENGINEERING, INC.

HVAC – PLUMBING – PROCESS CONTROL

RANDALL WHORTON, P.E.
PHONE: (256) 820-9897

25 SUMMERALL GATE ROAD
ANNISTON, ALABAMA 36205

WHORTON ENGINEERING PROJECT NO. 21108

SEAY SEAY & LITCHFIELD

1115 South Court Street
Montgomery, AL 36104
(334) 263-5162

Owner:
The Armory Commission of Alabama
1720 Cong WL Dickinson Drive
Montgomery, AL 36109

SS&L Job Number
14057

IFB Job Number
AC-22-B-0004-S

Date
JANUARY 2022

Drawn By
RDL

Checked By
RDW

Revised

Project Title

NORTHPORT
FMS #9 RENOVATIONS
NORTHPORT, AL

Sheet Title

HVAC DEMOLITION PLAN

Sheet Number

M3.1

ALABAMA No.14192 PROFESSIONAL ENGINEER RANDALL D. WHORTON

01-10-2022

BIG ASS FANS OR APPROVED EQUAL
SEE M1.2 DF–1 – DF–6 SCHEDULE FOR ADDITIONAL INFORMATION.

CONTRACTOR SHALL FURNISH AND INSTALL STRUCTURAL SUPPORTS REQUIRED TO INSTALL FAN IN ACCORDANCE WITH MANUFACTURER'S RECOMMENDATIONS. STRUCTURAL SUPPORTS SHALL BE SUBMITTED TO THE ARCHITECT FOR REVIEW AND APPROVAL.

DIFFUSER SCHEDULE

TAG	Size	Neck Size	Quantity	Manufacturer	Model Number	Type	Notes
RG–1	24"x24"	20"x20"	3	TITUS	8RF	RETURN	1" FILTER (20"x20")
SD–1	24"x24"	10"	8	TITUS	TDC	SUPPLY	
DG–1	24"x24"	–	1	TITUS	CT700L	–	

NOTE 1: FURNISH AND INSTALL AN INSULATION BLANKET ON THE BACK OF ALL CEILING MOUNTED DIFFUSERS AND GRILLES.
NOTE 2: FURNISH AND INSTALL NEW MANUAL BALANCING DAMPER IN DUCT RUN–OUT FOR TEST AND BALANCE.

VEHICLE EXHAUST NOTES

1. ARI–HETRA SPRING OPERATED HOSE REEL EXTRACTION SYSTEM. (2000 CFM EACH)
2. ARI–HETRA ARI–3000 ALUMINUM SLOTTED SUCTION DUCTING.
3. 12"ø EXHAUST DUCT CONNECTION TO EXHAUST CHANNEL. CONNECT TO CHANNEL WITH FACTORY EXHAUST CONNECTORS.
4. CARBON MONOXIDE WALL MOUNT CONTROLLER WITH VISIBLE AND AUDIBLE ALARMS. CARBON MONOXIDE WALL MOUNTED CONTROLLER/MONITOR SHALL BE EQUAL TO ENMET CORPORATION CP–10 ALARM MONITOR WITH CARBON MONOXIDE ROOM SENSOR. CONTROLLER REQUIRES 120–1–60 POWER.
5. CARBON MONOXIDE ROOM SENSOR EQUAL TO ENMET CORPORATION SDS–97D. 24 VDC LOOP POWER FROM CONTROLLER TO SENSOR SHALL BE INSTALLED BY THE MECHANICAL SUB–CONTRACTOR. SENSOR SHALL BE MOUNTED 60" AFF.

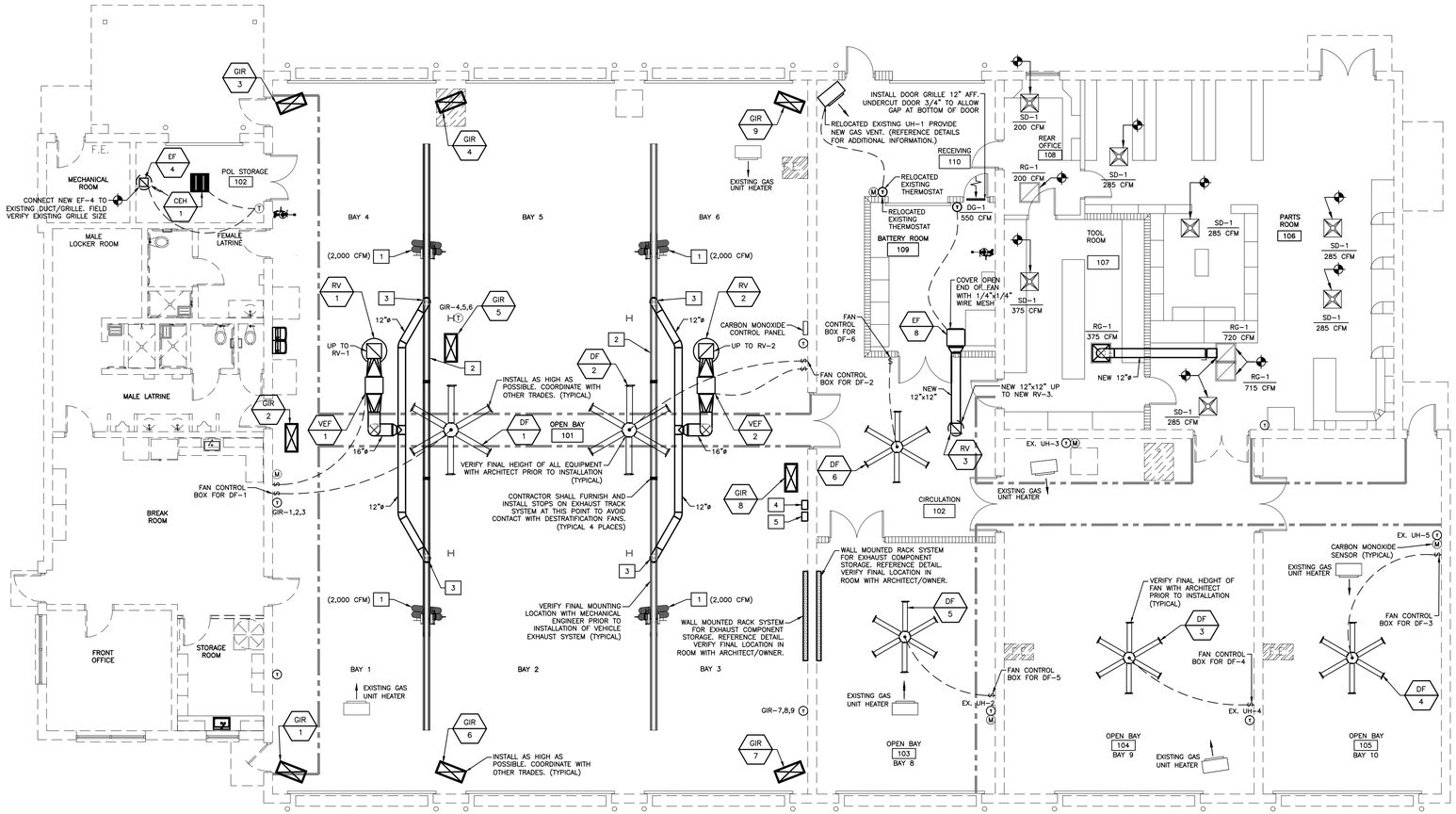

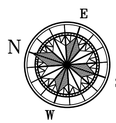

HVAC REVISED PLAN

SCALE: 1/8" = 1'–0"

0' 4' 16'
BAR SCALE

WHORTON ENGINEERING, INC.
HVAC – PLUMBING – PROCESS CONTROL
RANDALL WHORTON, P.E.
PHONE: (256) 820–9897
25 SUMMERALL GATE ROAD
ANNISTON, ALABAMA 36205

WHORTON ENGINEERING PROJECT NO. 21108

SEAY SEAY & LITCHFIELD
1115 South Court Street
Montgomery, AL 36104
(334) 263–5162

Owner:
The Armory Commission of Alabama
1720 Cong WL Dickinson Drive
Montgomery, AL 36109

SS&L Job Number
14057

IFB Job Number
AC–22–B–0004–S

Date
JANUARY 2022

Drawn By
RDL

Checked By
RDW

Revised

Project Title
NORTHPORT
FMS #9 RENOVATIONS
NORTHPORT, AL

Sheet Title
HVAC REVISED PLAN

Sheet Number
M4.1

ALABAMA
RANDALL D. WHORTON
No.14192
PROFESSIONAL
ENGINEER
01–10–2022

EXHAUST FAN SEQUENCE OF OPERATION

EF-1 WALL MOUNTED THERMOSTAT (SEE SCHEDULE NOTE) SHALL BE MOUNTED AT 60" AFF.

1. SWITCH AND ALL WIRING SHALL BE FURNISHED AND INSTALLED BY THE ELECTRICAL CONTRACTOR.
2. MAGNETIC MOTOR STARTERS AND OVERLOADS SHALL BE FURNISHED AND INSTALLED BY THE ELECTRICAL CONTRACTOR.
3. THE INTAKE LOUVER DAMPER OPERATOR AND LIMIT SWITCH SHALL BE MOUNTED IN A BASE FRAME BELOW THE FAN /LOUVER WALL SLEEVE.

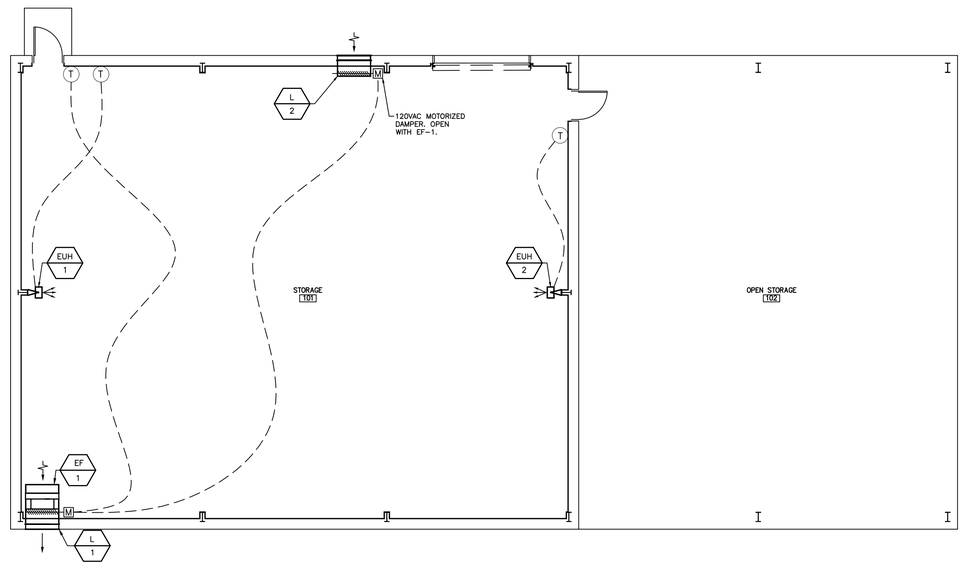

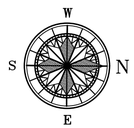

STORAGE BLDG. HVAC PLAN

SCALE: 1/8" = 1'-0"

0" 4" 16'

BAR SCALE

WHORTON ENGINEERING, INC.

HVAC – PLUMBING – PROCESS CONTROL

RANDALL WHORTON, P.E.
PHONE: (256) 820-9897

25 SUMMERALL GATE ROAD
ANNISTON, ALABAMA 36205

WHORTON ENGINEERING PROJECT NO. 21108

SEAY SEAY & LITCHFIELD

1115 South Court Street
Montgomery, AL 36104
(334) 263-5162

Owner:
The Armory Commission of Alabama
1720 Cong WL Dickinson Drive
Montgomery, AL 36109

SS&L Job Number
14057

IFB Job Number
AC-22-B-0004-S

Date
JANUARY 2022

Drawn By
RDL

Checked By
RDW

Revised

Project Title
NORTHPORT
FMS #9 RENOVATIONS
NORTHPORT, AL

Sheet Title
STORAGE BLDG.
HVAC PLAN

Sheet Number
M5.1

ALABAMA REGISTERED No.14192 PROFESSIONAL ENGINEER RANDALL D WHORTON

01-10-2022

CEILING OUTLETS

- A (2) — RECESSED 2'x4' LAY-IN FIXTURE, MARK 'A' CIRCUIT NUMBER 2, TYPICAL.
- A (2) — RECESSED 2'x4' LAY-IN FIXTURE, MARK 'A' CIRCUIT NUMBER 2, TYPICAL, 'EMERGENCY POWER'.
- A (2) — RECESSED 1'x4' LAY-IN FIXTURE, MARK 'A' CIRCUIT NUMBER 2, TYPICAL.
- A (2) — RECESSED 1'x4' LAY-IN FIXTURE, MARK 'A' CIRCUIT NUMBER 2, TYPICAL, 'EMERGENCY POWER'.
- A (2) — RECESSED 2'x2' LAY-IN FIXTURE, MARK 'A' CIRCUIT NUMBER 2, TYPICAL.
- A (2) — RECESSED 2'x2' LAY-IN FIXTURE, MARK 'A' CIRCUIT NUMBER 2, TYPICAL, 'EMERGENCY POWER'.
- A (2) — SURFACE OR PENDANT MOUNTED LINEAR STRIP FIXTURE, MARK 'A' CIRCUIT NUMBER 2, TYPICAL.
- A (2) 2 — SURFACE OR PENDANT MOUNTED LINEAR STRIP FIXTURE, MARK 'A' CIRCUIT NUMBER 2, TYPICAL, 'EMERGENCY POWER'.
- A (2) — RECESSED OR SURFACE MOUNTED DOWNLIGHT, MARK 'A' CIRCUIT NUMBER 2, TYPICAL.
- A 2 — RECESSED OR SURFACE MOUNTED DOWNLIGHT, MARK 'A' CIRCUIT NUMBER 2, TYPICAL, 'EMERGENCY POWER'.
- A (2) — RECESSED OR SURFACE MOUNTED ROUND FIXTURE, MARK 'A' CIRCUIT NUMBER 2, TYPICAL.
- A 2 — RECESSED OR SURFACE MOUNTED ROUND FIXTURE, MARK 'A' CIRCUIT NUMBER 2, TYPICAL. 'EMERGENCY POWER'.
- CEILING MOUNTED SINGLE FACE EXIT SIGN, ARROWS AS SHOWN ON DRAWINGS.
- CEILING MOUNTED DOUBLE FACE EXIT SIGN, ARROWS AS SHOWN ON DRAWINGS.
- CEILING MOUNTED JUNCTION BOX.
- DUPLEX RECEPTACLE – 20AMP., 125 VOLT, 2 POLE, 3 WIRE GROUNDED TYPE, NEMA 5–20R. CEILING MOUNTED.
- G DUPLEX RECEPTACLE – 20AMP., 125 VOLT, GFI, 2 POLE, 3 WIRE GROUNDED TYPE, NEMA 5–20R. CEILING MOUNTED.
- V DUPLEX RECEPTACLE – 20AMP., 125 VOLT, GFI, 2 POLE, 3 WIRE GROUNDED TYPE, NEMA 5–20R. CEILING MOUNTED. MOUNT IN 4"x4"x2" BOX. PROVIDE STEEL BARRIER BETWEEN CATV/RECEPTACLE AND CONNECTOR WITH BUSHING FOR CATV CABLE.
- JUNCTION BOX WITH FLEXIBLE CONNECTION TO EQUIPMENT.
- JUNCTION BOX WITH FLEXIBLE CONNECTION TO FIXTURE.
- INDUSTRIAL CORD REEL WITH PORTABLE NEMA 5–20R GFI DUPLEX OUTLET BOX EQUAL TO HUBBELL MODEL #HBL45123R20, SUSPEND FROM STRUCTURE ABOVE
- A INDUSTRIAL CORD REEL WITH PORTABLE NEMA L15–30R DUPLEX OUTLET BOX 120/208V, 3PHASE, 30 AMP. (VERIFY EXACT NEMA CONFIGURATION PRIOR TO BIDS)

WALL OUTLETS

- A (2) — WALL MOUNTED FIXTURE, MARK 'A' CIRCUIT NUMBER 2, TYPICAL.
- A (2) 2 — WALL MOUNTED FIXTURE, MARK 'A' CIRCUIT NUMBER 2, TYPICAL, 'EMERGENCY POWER'.
- WALL MOUNTED SINGLE FACE EXIT SIGN, ARROWS AS SHOWN ON DRAWINGS.
- (2) A — WALL MOUNTED FIXTURE, MARK 'A' CIRCUIT NUMBER 2, TYPICAL.
- 2 A — WALL MOUNTED FIXTURE, MARK 'A' CIRCUIT NUMBER 2, TYPICAL, 'EMERGENCY POWER'.
- BATTERY OPERATED EMERGENCY FIXTURE.
- DUPLEX RECEPTACLE – 20AMP., 125 VOLT, 2 POLE, 3 WIRE GROUNDED TYPE, NEMA 5–20R. MOUNT 18" A.F.F. UNLESS OTHERWISE NOTED.
- G DUPLEX RECEPTACLE – 20AMP., 125 VOLT, GFI, 2 POLE, 3 WIRE GROUNDED TYPE, NEMA 5–20R. MOUNT 18" A.F.F. UNLESS OTHERWISE NOTED.
- W DUPLEX RECEPTACLE – 20AMP., 125 VOLT, GFI, 2 POLE, 3 WIRE GROUNDED TYPE, NEMA 5–20R. MOUNT 18" A.F.F. UNLESS OTHERWISE NOTED, PROVIDE WEATHERPROOF WHILE IN USE BOX FOR RECEPTACLE.
- SB DUPLEX RECEPTACLE – 20AMP., 125 VOLT, GFI, 2 POLE, 3 WIRE GROUNDED TYPE, NEMA 5–20R. MOUNT AS DIRECTED FOR SMARTBOARD.
- DUPLEX RECEPTACLE – 20AMP., 125 VOLT, 2 POLE, 3 WIRE GROUNDED TYPE, NEMA 5–20R. MOUNT 6" ABOVE COUNTER.
- G DUPLEX RECEPTACLE – 20AMP., 125 VOLT, GFI, 2 POLE, 3 WIRE GROUNDED TYPE, NEMA 5–20R. MOUNT 6" ABOVE COUNTER.
- QUADRAPLEX RECEPTACLE – 20AMP., 125 VOLT, 2 POLE, 3 WIRE GROUNDED TYPE, NEMA 5–20R. MOUNT 18" A.F.F. UNLESS OTHERWISE NOTED.
- G QUADRAPLEX RECEPTACLE – 20AMP., 125 VOLT, GFI, 2 POLE, 3 WIRE GROUNDED TYPE, NEMA 5–20R. MOUNT 18" A.F.F. UNLESS OTHERWISE NOTED.
- QUADRAPLEX RECEPTACLE – 20AMP., 125 VOLT, 2 POLE, 3 WIRE GROUNDED TYPE, NEMA 5–20R. MOUNT 6" ABOVE COUNTER.
- G QUADRAPLEX RECEPTACLE – 20AMP., 125 VOLT, GFI, 2 POLE, 3 WIRE GROUNDED TYPE, NEMA 5–20R. MOUNT 6" ABOVE COUNTER.
- QUADRAPLEX RECEPTACLE – 20AMP., 125 VOLT, 2 POLE, 3 WIRE GROUNDED TYPE, NEMA 5–20R. MOUNT 26" A.F.F. TO CENTER LINE FOR DRINKING FOUNTAIN. PROVIDE GFI BREAKER IN PANELBOARD.
- CM DUPLEX RECEPTACLE – 20AMP., 125 VOLT, 2 POLE, 3 WIRE GROUNDED TYPE, NEMA 5–20R. CONNECTION FOR COFFEE MAKER, COORDINATE MOUNTING HEIGHT WITH ARCHITECTURAL ELEVATIONS. PROVIDE GFI BREAKER IN PANELBOARD.
- MW DUPLEX RECEPTACLE – 20AMP., 125 VOLT, 2 POLE, 3 WIRE GROUNDED TYPE, NEMA 5–20R. CONNECTION FOR MICROWAVE, COORDINATE MOUNTING HEIGHT WITH ARCHITECTURAL ELEVATIONS. PROVIDE GFI BREAKER IN PANELBOARD
- R DUPLEX RECEPTACLE – 20AMP., 125 VOLT, 2 POLE, 3 WIRE GROUNDED TYPE, NEMA 5–20R. CONNECTION FOR REFRIGERATOR, COORDINATE MOUNTING HEIGHT WITH ARCHITECTURAL ELEVATIONS. PROVIDE GFI BREAKER IN PANELBOARD
- UCR DUPLEX RECEPTACLE – 20AMP., 125 VOLT, 2 POLE, 3 WIRE GROUNDED TYPE, NEMA 5–20R. CONNECTION FOR UNDER COUNTER REFRIGERATOR, COORDINATE MOUNTING HEIGHT WITH ARCHITECTURAL ELEVATIONS. PROVIDE GFI BREAKER IN PANELBOARD.
- V DUPLEX RECEPTACLE – 20AMP., 125 VOLT, GFI, 2 POLE, 3 WIRE GROUNDED TYPE, NEMA 5–20R. MOUNT IN 4"x4"x2" BOX. PROVIDE STEEL BARRIER BETWEEN CATV/RECEPTACLE AND CONNECTOR WITH BUSHING FOR CATV CABLE.
- SINGLE RECEPTACLE – SEE DRAWINGS FOR NEMA CONFIGURATION.
- WALL MOUNTED JUNCTION BOX SIZE NOTED OR REQUIRED WITH BLANK SCREW COVER.
- WALL MOUNTED JUNCTION BOX SIZE NOTED OR REQUIRED WITH BLANK SCREW COVER AND FLEXIBLE CONDUIT CONNECTION.
- P WALL MOUNTED JUNCTION BOX SIZE NOTED OR REQUIRED WITH BLANK SCREW COVER AND FLEXIBLE CONDUIT POWER CONNECTION FOR PREWIRED MODULAR FURNITURE. 3#10 & 3#10(NEUTRAL) & 1#10 (GROUND) 1"C.
- PLUGMOLD ASSEMBLY WITH RECEPTACLES SPACED EVERY 24" ON CENTER. ALTERNATE CIRCUITS FOR EVERY OTHER RECEPTACLE. VERIFY LENGTH ON FLOOR PLANS. PROVIDE 1–1/4"C. FOR COMMUNICATION CABLING UP ABOVE ACCESSIBLE CEILING. SIMILAR TO WIREMOLD #4000 DESIGNER SERIES.

LIGHTING CONTROLS

- OS — CEILING MOUNTED OCCUPANCY SENSOR.
- PP — POWER PACK FOR OCCUPANCY SENSOR.
- L1 — ROOM CONTROLLER – 1 ZONE DIMMING.
- L2 — ROOM CONTROLLER – 2 ZONE DIMMING.
- L3 — ROOM CONTROLLER – 3 ZONE DIMMING.
- EL — U.L. 924 TRANSFER DEVICE TO BRING DIMMED FIXTURES TO 100%.
- RC — ROOM CONTROLLER – ON/OFF NO DIMMING.
- D1 — WALL DIMMER – ON/OFF & 0–10V 1–ZONE DIMMING.
- D2 — WALL DIMMER – ON/OFF & 0–10V 2–ZONE DIMMING.
- D3 — WALL DIMMER – ON/OFF & 0–10V 2–ZONE DIMMING.
- $L — LOW VOLTAGE SWITCH, 2–BUTTON.
- $L2 — LOW VOLTAGE SWITCH CONNECTED TO LIGHTING CONTROL PANEL, 2–BUTTON.
- $L4 — LOW VOLTAGE SWITCH CONNECTED TO LIGHTING CONTROL PANEL, 4–BUTTON.
- $01 — OCCUPANCY SENSOR WALL SWITCH, DUAL TECHNOLOGY, ON/OFF.
- $02 — OCCUPANCY SENSOR WALL SWITCH, DUAL TECHNOLOGY, ON/OFF, RAISE LOWER.
- $T — DIGITAL TIME SWITCH.
- PUSH BUTTON, TOGGLE SWITCH, ROTARY SWITCH, ETC., FURNISHED WITH EQUIPMENT BY OTHER, INSTALLED AND WIRED BY THE ELECTRICAL CONTRACTOR.
- P — PHOTOCELL, TORK MODEL 5231 (120V), TWIST RECEPTACLE: TORK 2421.

*COORDINATE WITH LIGHTING CONTROL DETAILS FOR MORE REQUIREMENTS.

BRANCH CIRCUITING

- RUN CONCEALED UNDER FLOOR OR IN GROUND SLAB.
- RUN CONCEALED IN CEILING OR WALLS.
- EXISTING – REMOVE IF EXPOSED, ABANDON IF CONCEALED, REMOVE ALL CONDUCTORS.
- SURFACE MOUNTED CONDUIT, RUN PARALLEL OR PERPENDICULAR TO BUILDING LINES.
- E — EMERGENCY.
- LIQUID–TIGHT FLEXIBLE CONDUIT CONNECTION.
- LA — HOMERUN TO PANEL. ANY CIRCUIT WITHOUT FURTHER IDENTIFICATION INDICATES 2#12 & 1#12 GROUND – 3/4"C. 3#12 & 1#12 GROUND – 3/4"C, 4#12 & 1#12 GROUND – 3/4"C, ETC AS PER NEC. LETTERS INDICATE PANELBOARD DESIGNATION.
- 10 / LA — HOMERUN TO PANEL. ANY CIRCUIT WITHOUT FURTHER IDENTIFICATION INDICATES 2#10 & 1#10 GROUND – 3/4"C. 3#10 & 1#10 GROUND – 3/4"C, 4#10 & 1#10 GROUND – 3/4"C, ETC AS PER NEC. LETTERS INDICATED PANELBOARD DESIGNATION.
- 8 / LA — HOMERUN TO PANEL. ANY CIRCUIT WITHOUT FURTHER IDENTIFICATION INDICATES 2#10 & 1#10 GROUND – 3/4"C. 3#10 & 1#10 GROUND – 3/4"C, 4#10 & 1#10 GROUND – 3/4"C, ETC AS PER NEC. LETTERS INDICATED PANELBOARD DESIGNATION.
- 6 — WHERE A NUMBER IS SHOWN NEXT TO OR ON THE CIRCUIT OR HOMERUN, THE NUMBER INDICATES CONDUCTOR SIZE OTHER THAN #12 – NUMBER #6 CONDUCTORS INDICATED. PROVIDE GROUND SIZED PER NEC TABLE 250 FOR MAX AMPACITY OF CONDUCTOR SIZE AS SHOWN. SIZE CONDUIT PER NEC ANNEX C.
- RISER: UP, RUNNING TO SOURCE.
- RISER: DOWN, RUNNING TO SOURCE.

PANELS AND POWER

- PANELBOARD SURFACE MOUNTED.
- PANELBOARD FLUSH MOUNTED.
- CON — CONTROL PANEL
- NON–FUSIBLE DISCONNECT SWITCH, XX/YY/ZZ WHERE X INDICATES AMPERAGE, Y INDICATES # OF POLES, AND Z INDICATES NEMA RATING.
- FUSIBLE DISCONNECT SWITCH, XX/YY/ZZ WHERE X INDICATES AMPERAGE, Y INDICATES # OF POLES, AND Z INDICATES NEMA RATING. FURNISH AND INSTALL FUSES PER MANUFACTURER'S RECOMMENDATIONS.
- CIRCUIT BREAKER, XX/YY WHERE X INDICATES AMPERAGE, Y INDICATES # OF POLES.
- MAGNETIC MOTOR STARTER, SIZE 1.
- COMBINATION NON–FUSIBLE DISCONNECT SWITCH AND STARTER, XX/YY/ZZ WHERE X INDICATES AMPERAGE, Y INDICATES # OF POLES, AND Z INDICATES NEMA RATING.
- COMBINATION FUSIBLE DISCONNECT SWITCH AND STARTER, XX/YY/ZZ WHERE X INDICATES AMPERAGE, Y INDICATES # OF POLES, AND Z INDICATES NEMA RATING. FURNISH AND INSTALL FUSES PER MANUFACTURER'S RECOMMENDATIONS.
- CIRCUIT BREAKER
- GROUND
- METER

WALL SWITCHES (MOUNT 48" A.F.F. TO TOP OF BOX)

- $ — A.C. TYPE, SINGLE POLE, 20AMP, 120/277 VOLT.
- 3$ — A.C. TYPE, 3–WAY, 20AMP, 120/277V VOLT.
- 4$ — A.C. TYPE, 4–WAY, 20AMP, 120/277V VOLT.
- °$ — A.C. TYPE, 4–WAY, 20AMP, 120/277V VOLT, CONTROLS ZONE 'o'.
- $$ — TWO SWITCHES IN TWO GANG BOX UNDER ONE WALLPLATE (NOTE: IF SWITCHES ARE CONNECTED TO DIFFERENT PANELBOARDS PROVIDE STEEL BARRIER BETWEEN SWITCHES.).
- MC $ — MOMENTARY CONTACT, 15A., 3–POSITION.
- TS $ — MOTOR RATED TOGGLE SWITCH DISCONNECT, WITH THERMAL OVERLOADS, A.C. TYPE, 20AMP, 120/277 VOLT.

PAGING AND INTERCOM SYSTEM

- S — WALL MOUNTED SPEAKER AND SUPPORTS. (WEATHERPROOF WHEN INDICATED).
- S — SPEAKER, BACK CAN, SUPPORTS, BAFFLED CONNECTED TO AMPLIFIER ZONE.
- S — CONDUIT AND PLENUM CABLE AS REQUIRED.

DRAWING CONVENTIONS

- NEW WORK
- EXISTING TO REMAIN
- XR — EXISTING TO REMOVE
- EX — EXISTING TO REMAIN
- XRR — EXISTING TO BE RELOCATED
- XRP — EXISTING TO BE REPLACED
- XRL — EXISTING RELOCATED
- XR — EXISTING TO BE REMOVED

MISCELLANEOUS

A	AMPERE
ADA	AMERICANS WITH DISABILITIES ACT
AFF	ABOVE FINISHED FLOOR
AIC	AMPERE INTERRUPTING CAPACITY
AL	ALUMINUM
ATS	AUTOMATIC TRANSFER SWITCH
AWG	AMERICAN WIRE GAUGE
C	CONDUIT
CFCI	CONTRACTOR FURNISHED CONTRACTOR INSTALLED
CFOI	CONTRACTOR FURNISHED OWNER INSTALLED
CKT	CIRCUITS
CL	CENTER LINE
CU	COPPER
CWP	COLD WATER PIPE
DIA	DIAMETER
EC	ELECTRICAL CONTRACTOR
EM	EMERGENCY
EMT	ELECTRIC METALLIC TUBING
EP	EXPLOSION PROOF
FMC	FLEXIBLE METAL CONDUIT
FLA	FULL LOAD AMPERES
G	GROUND
GFI	GROUND FAULT INTERRUPTER
GRC	GALVANIZED RIGID METAL CONDUIT
GRD	GROUND
H	MOUNTING HEIGHT ABOVE FINISHED FLOOR TO CENTERLINE
HP	HORSE POWER
KVA	KILOVOLT–AMPERES
KW	KILOWATT
KCMIL	THOUSAND CIRCULAR MILS
MCA	MINIMUM CIRCUIT AMPACITY
MCB	MAIN CIRCUIT BREAKER
MCC	MOTOR CONTROL CENTER
MLO	MAIN LUGS ONLY
MT	MOUNT
N	NEUTRAL
NIC	NOT IN CONTRACT
NEC	NATIONAL ELECTRICAL CODE
NEMA	NATIONAL ELECTRICAL MANUFACTURER'S ASSOC.
NFPA	NATIONAL FIRE PROTECTION ASSOCIATION
NL	NIGHT LIGHT
NTS	NOT TO SCALE
P	POLE
PF	POWER FACTOR
PH	PHASE
PNL	PANEL
PVC	PVC (POLYVINYL CHLORIDE) CONDUIT
SLD	SINGLE LINE DAIGRAM
TBB	TELEPHONE BACKBOARD
TVSS	TRANSIENT VOLTAGE SURGE SUPPRESSORS
UL	UNDERWRITER'S LABORATORY
UNO	UNLESS NOTED OTHERWISE
V	VOLTAGE
W	WIRE
WP	WEATHERPROOF
#	NUMBER
3R	NEMA 3R WEATHERPROOF ENCLOSURE
4X	NEMA 4X WEATHERPROOF/CORROSION ENCLOSURE

COMUNICATIONS

- WALL OUTLET – 4–1/2" SQ x 3–1/2" DEEP BOX, MOUNT 18" AFF, FOR TYPICAL UNITS – SEE SHEET E4.2 USE SHALLOW BOXES WHERE WALLS ARE FURRED OUT.
- C WALL OUTLET – 4–1/2" SQ x 3–1/2" DEEP BOX, MOUNT ABOVE COUNTER, FOR TYPICAL UNITS – SEE SHEET E4.2 USE SHALLOW BOXES WHERE WALLS ARE FURRED OUT.
- TV WALL OUTLET – 4–1/2" SQ x 3–1/2" DEEP BOX, MOUNT ON WALL AT HEIGHT AS DIRECTED BY ARCHITECT FOR TELEVISION. SEE TYPICAL UNITS SHEET E4.2.
- TBB — TELEPHONE BACKBOARD – 3/4" EXTERIOR GRADE PLYWOOD WITH TWO COATS OF INSULATING VARNISH, SIZE AS SHOWN.
- TV — TELEVISION CABLE WITH OUTLET WITH COAXIAL SCREW JACK AND COVERPLATE. MOUNT 18" AFF TO C/L.
- COMMUNICATIONS RACK.
- CON — DATA CONNECTION FOR MECHANICAL CONTROL PANEL. COORDINATE WITH MECHANICAL FOR EXACT LOCATION. 4–1/2" SQ x 3–1/2" DEEP BOX WITH 3/4" CONDUIT STUBBED TO ABOVE CEILING. PROVIDE PROTECTIVE BUSHING. PROVIDE ONE CAT 6 BACK TO COMM RACK.
- WIRELESS ACCESS POINT. PROVIDE TWO (2) CAT6 CABLES TO THIS LOCATION AND TERMINATE. PROVIDE 15 FEET OF SLACK AT THIS LOCATION FOR FINAL LOCATION BY ARNG..
- CCTV — CLOSED CIRCUIT TELEVISION CAMERA.
- CCTV — CLOSED CIRCUIT TELEVISION LED TV

FIRE ALARM

- FACP — FIRE/MNS ALARM SYSTEM CONTROL PANEL
- LOC — FIRE ALARM/MNS SYSTEM LOCAL OPERATING CONSOLE
- F — FIRE ALARM SYSTEM MANUAL PULL STATION.
- F — FIRE ALARM/MNS VOICE EVAC SPEAKER/WHITE STROBE LABELED 'ALERT'.
- FIRE ALARM SYSTEM/MNS CLEAR STROBE FIRE/AMBER STROBE MNS.
- TS — FIRE ALARM SYSTEM TAMPER SWITCH.
- FS — FIRE ALARM SYSTEM FLOW SWITCH.
- HD — FIRE ALARM SYSTEM AUTOMATIC HEAT DETECTOR, 135 DEGREE/RATE OF RISE TYPE, CEILING MOUNTED.
- SD — FIRE ALARM SYSTEM AUTOMATIC SMOKE DETECTOR, CEILING MOUNTED.
- DD — FIRE ALARM SYSTEM AUTOMATIC AIR DUCT SMOKE DETECTOR MOUNTED IN MECHANICAL DUCT.
- RT — FIRE ALARM SYSTEM REMOVE TEST STATION.
- ZC — FIRE ALARM SYSTEM ZONE MODULE, CONTROL TYPE.
- ZM — FIRE ALARM SYSTEM ZONE MODULE, MONITOR TYPE.
- FIRE ALARM SYSTEM MAGNETIC DOOR HOLDERS.
- F — FIRE ALARM SYSTEM SUPERVISED CIRCUITING IN CONDUIT, RACEWAY INSTALLED CONCEALED.

Gunn & Associates, P.C.
Consulting Engineers
3102 Highway 14
Millbrook, AL 36054
Tel: 334.285.1273
1200 Providence Park, Suite 200
Birmingham, AL 35242
GA#18-109

SEAY SEAY & LITCHFIELD
1115 South Court Street
Montgomery, AL 36104
(334) 263–5162

Owner:
The Armory Commission of Alabama
1720 Cong WL Dickinson Drive
Montgomery, AL 36109

SS&L Job Number
14057

IFB Job Number
AC–22–B–0004–S

Date
JANUARY 2022

Drawn By
SBW

Checked By
KRG

Revised
–

Project Title
NORTHPORT
FMS #9 RENOVATIONS
NORTHPORT, AL

Sheet Title
ELECTRICAL LEGEND

Sheet Number
E0.1

ALABAMA REGISTERED
NO. 26988
PROFESSIONAL
01–07–22
KENNETH RAY GUNN, JR.
ENGINEER

GENERAL ELECTRICAL NOTES:

1. THESE DRAWINGS ARE A PART OF A COMPLETE SET OF ARCHITECTURAL/ENGINEERING CONTRACT DOCUMENTS. ELECTRICAL CONTRACTOR SHOULD REFER TO THE ARCHITECTURAL PLANS FOR WALL DEFINITIONS, ELEVATIONS, CASEWORK, REFLECTED CEILING PLAN, ETC..
2. INSTALLATION SHALL COMPLY WITH THE NATIONAL ELECTRICAL CODE, STATE AND LOCAL CODES AND MANUFACTURER'S RECOMMENDATIONS. CONTRACTOR SHALL OBTAIN AND PAY FOR ALL NECESSARY PERMITS.
3. MAINTAIN ALL CLEARANCES FOR ELECTRICAL EQUIPMENT PER THE NEC.
4. ALL SYMBOLS SHOWN ON THIS LEGEND MAY NOT BE USED.
5. ALL BRANCH CIRCUIT CONDUIT SHALL BE GALVANIZED EMT, JOINED AND TERMINATED WITH SET SCREW STEEL FITTING, 3/4" CONDUIT MINIMUM.
6. ALL DIMENSIONS INDICATED IN THESE DOCUMENTS ARE FOR REFERENCE AND COORDINATION PURPOSES ONLY. THE CONTRACTOR IS RESPONSIBLE FOR VERIFYING ALL DIMENSIONS IN THE FIELD AND COORDINATING WORK WITH OTHER TRADES TO AVOID CONFLICTS.
7. VERIFY ALL DOOR SWINGS WITH ARCHITECTURAL BEFORE ROUGH-IN OF LIGHT SWITCHES TO ENSURE PROPER SWITCH LOCATION.
8. THE LOCATION OF OUTLETS, FIXTURES AND EQUIPMENT SHOWN ON THE DRAWINGS ARE APPROXIMATE. OFFSET AS NEEDED OR AS REQUESTED BY THE OWNER. THE OWNER SHALL HAVE THE RIGHT TO RELOCATE ANY OUTLETS OR FIXTURES BEFORE THEY ARE INSTALLED WITHOUT ANY ADDITIONAL COST.
9. COORDINATE EXACT LOCATION OF ALL ELECTRICAL FLOOR DEVICES WITH ARCHITECT PRIOR TO INSTALLATION.
10. ALL ELECTRICAL RACEWAYS AND CABLING SHALL BE INSTALLED CONCEALED WITHIN THE CONFINES OF THE BUILDING FOUNDATIONS EXCEPT THOSE SPECIFICALLY SERVING LOADS OR EQUIPMENT EXTERIOR OF THE BUILDING. ALL SUCH RACEWAYS SHALL BE A MINIMUM 18" INSIDE FOUNDATIONS. POWER AND COMMUNICATIONS RACEWAYS SHALL BE SEPARATED BY A MINIMUM 18".
11. ALL CIRCUITS SHOWN CONCEALED SHALL BE RUN IN FURRED CEILING SPACES AND SHALL BE CONCEALED IN CONCRETE SLAB ONLY WHEN NO FURRED CEILING SPACE IS PROVIDED.
12. ALL CONDUITS INSTALLED UNDERFLOOR SHALL BE ROUTED UNDER STRUCTURAL CONCRETE FLOOR SLABS. CONTRACTOR SHALL NOT INSTALL CONDUITS IN CONCRETE FLOORING WITHOUT THE EXPRESS WRITTEN PERMISSION OF THE STRUCTURAL ENGINEER. CONDUITS PENETRATING THRU CONCRETE FLOORS SHALL ADHERE TO THE ELECTRICAL SPECIFICATIONS AND RECOMMENDATIONS OF THE STRUCTURAL ENGINEER.
13. ALL RACEWAYS INSTALLED ON EXTERIOR OF THE BUILDING, INCLUDING CONDUIT UNDER CANOPIES, SHALL BE GRC, EMT WILL NOT BE ACCEPTED.
14. ALL RACEWAYS SHALL BE SUPPORTED PER NEC AND AT LEAST EVERY 10' AND WITHIN 3' OF EVERY JUNCTION BOX. RACEWAYS SUPPORTED ON BOTTOM OF SECONDARY CEILING SHALL BE SUPPORTED FROM THE STRUCTURE NOT FROM THE GYPBOARD CEILING.
15. ALL EMPTY WALL MOUNTED JUNCTION BOXES SHALL BE PROVIDED WITH A WALL BLANK AND ALL EMPTY RACEWAYS SHALL BE PROVIDED WITH PULL WIRES.
16. ALL CONDUITS CROSSING EXPANSION JOINTS SHALL HAVE EXPANSION TYPE FITTINGS.
17. ALL OUTLET BOXES MOUNTED BACK-TO-BACK IN WALLS SHALL HAVE FIREPROOF SOUND INSULATING MATERIAL INSTALLED BETWEEN THE BOXES TO PREVENT SOUND TRANSMISSION FROM ONE ROOM TO THE OTHER.
18. ALL FLUSH MOUNTED PANELS SHALL HAVE 3-1" EMPTY CONDUITS STUBBED OUT ABOVE CEILING FOR FUTURE CIRCUITS.
19. PROVIDE ALL CONDUIT STUBS WITH A PROTECTIVE COLLAR.
20. INSURE THAT ALL PENETRATIONS OF FIRE WALLS AND DECKS ARE PROPERLY SEALED PER INTERNATIONAL BUILDING CODE 712 AND WITH AN UL APPROVED DEVICE OR FIRE CAULK. REFER TO ARCHITECTURAL PLANS FOR THE LOCATIONS OF RATED FIRE WALLS AND UL ASSEMBLY LOCATIONS AND TYPES AND BID ACCORDINGLY.
21. ALL UNDERGROUND CONDUIT RUNS ENTERING THE BUILDING SHALL BE SEALED TO PREVENT THE ENTRANCE OF MOISTURE.
22. ALL FLEXIBLE CONDUITS ON THE EXTERIOR, IN WET LOCATIONS OR ANY MECHANICAL ROOM SHALL BE LIQUID TIGHT WITH SUITABLE FITTINGS.
23. THE CONTRACTOR SHALL BE RESPONSIBLE FOR SEALING AROUND DEVICES, PENETRATIONS, OUTLETS, AND CONDUITS THAT PENETRATE THE WALLS ABOVE THE CEILING TO MAINTAIN SOUNDPROOFING. CONTRACTOR SHALL VERIFY THAT THE OPENING SIZES ARE LESS THAN 1/2" ON ALL SIDES OF THE PENETRATION. ALL OPENINGS IN EXCESS OF 1/2" SHALL BE CAULKED/ SEALED WITH SHEET ROCK MUD. THE DRYWALL CONTRACTOR SHALL BE RESPONSIBLE FOR SEALING PENETRATIONS IN PLACE WHEN THE SHEETROCK IS INSTALLED. PENETRATIONS MADE AFTER THE DRYWALL CONTRACTOR HAS COMPLETED IN AN AREA SHALL BE SEALED BY THE CONTRACTOR MAKING THE PENETRATION.
24. PLANNED INTERRUPTIONS OF UTILITY SERVICE TO ANY EXISTING FACILITY OR AREAS WITHIN ANY FACILITY AFFECTED BY THIS CONTRACTOR SHALL BE CAREFULLY PLANNED AND COORDINATED IN ADVANCE OF THE REQUESTED INTERRUPTION. THE CONTRACTOR SHALL NOT INTERRUPT SERVICES UNTIL SPECIFIED APPROVAL HAS BEEN GRANTED. THE REQUEST SHALL INDICATE SERVICES AND AREAS TO BE AFFECTED, DATE AND TIME OF INTERRUPTION AND DURATION OF OUTAGE. REQUEST FOR INTERRUPTION OF SERVICE WILL NOT BE APPROVED UNTIL ALL EQUIPMENT AND MATERIAL REQUIRED FOR THE COMPLETION OF THAT PARTICULAR PHASE OF WORK ARE ON THE JOB SITE. CONTRACTOR IS RESPNSIBLE FOR ALL OVERTIME, HOLIDAY AND WEEKEND PAY TO THEIR EMPLOYEES TO DO THIS WORK DURING SCHEDULED NON-NORMAL WORK HOURS.
25. ALL EMERGENCY LIGHTS AND EXIT SIGNS SHALL HAVE AN EMERGENCY BATTERY DRIVER CONNECTED AHEAD OF LOCAL SITCHING, UNLESS EMERGENCY LIGHTING IS ON EMERGENCY CIRCUIT FROM A GENERATOR.
26. CONTRACTOR IS RESPONSIBLE FOR PROPER SENSITIVITY AND TIME DELAY SETTINGS FOR OCCUPANCY SENSORS. PROVIDE PROPER NUMBER OF POWER RACKS AND LOCATE POWER PACKS AND OCCUPANCY SENSORS ACCORDING TO MANUFACTURER'S RECOMMENDATIONS.
27. ALL JUNCTION BOX COVERS ABOVE THE CEILING SHALL BE CLEARLY MARKED WITH WHICH CIRCUITS OR ELECTRICAL SYSTEM THEY CONTAIN.
28. HVAC EQUIPMENT POWER WIRING SHALL BE FURNISHED AND INSTALLED BY THIS CONTRACTOR. CONTROL EQUIPMENT AND CONTROL WIRING SHALL BE FURNISHED UNDER DIVISION 15 UNLESS OTHERWISE NOTED. PROVIDE 3/4" CONDUITS WITH PULL WIRE BETWEEN INSIDE AND OUTSIDE UNITS, THERMOSTAT OUTLETS AND UNITS AND/OR MECHANICAL CONTROL PANEL AS APPLICABLE. THERMOSTAT OUTLETS SHALL BE 4" SQUARE OUTLETS, FLUSH MOUNTED WITH SINGLE GANG OR DOUBLE GANG PLASTER RINGS AS DIRECTED BY THE HVAC CONTRACTOR. COORDINATE EXACT LOCATION OF ALL EQUIPMENT, DEVICES, OUTLETS, ETC. WITH THE MECHANICAL DRAWINGS AND DIVISION 15 SPECIFICATIONS. COORDINATE WITH THE HVAC CONTRACTOR FOR EXACT LOCATIONS OF ALL EQUIPMENT.
29. ALL BRANCH CIRCUITS SHALL INCLUDE A GREEN COVERED GROUND WIRE SIZED PER NEC OR AS SHOWN. CONNECT TO EACH DEVICE AND OUTLET BOX ON THE CIRCUIT AND TO THE PANELBOARD GROUND BUS. MULTIPLE WIRE BRANCH CIRCUITS WITH COMMON NEUTRAL REQUIRE ONLY ONE GROUND WIRE. NUMBER OF WIRES SHOWN ON DRAWINGS DOES NOT INCLUDED GROUND WIRE.
30. INFORMATION SHOWN ON THESE PLANS IS TAKEN FROM EXISTING DRAWINGS AND SITE SURVEY. PRIOR TO BID, THE ELECTRICAL CONTRACTOR SHALL VISIT SITE TO SURVEY EXISTING CONDITIONS AFFECTING WORK. INCLUDE NECESSARY MATERIALS AND LABOR TO ACCOMPLISH THE ELECTRICAL WORK, INCLUDING RELOCATION OF EXISTING EQUIPMENT TO ALLOW FOR NEW CONSTRUCTION. ANY CONFLICTS SHALL BE BROUGHT TO THE ATTENTION OF THE ARCHITECT/ENGINEER AND RESOLVED PRIOR TO BID. WORK SHALL BE COORDINATED WITH ALL OTHER TRADES.
31. MULTI-POLE BREAKERS SHALL BE USED TO SERVE MULTIWIRE BRANCH CIRCUITS. MULTIPLE SINGLE POLE BREAKERS MY BE USED IN CONJUNCTION WITH U.L. LISTED HANDLE TIES THAT WILL INITIATE A COMMON DISCONNECT OF ALL UNGROUNDED CONDUCTORS. CONTRACTOR SHALL COORDINATE WITH MANUFACTURER.

GENERAL DEMOLITION NOTES:

1. CONTRACTOR IS RESPONSIBLE FOR VERIFYING ALL EXISTING CONDITIONS PRIOR TO BID AND BIDDING ACCORDINGLY.
2. ALL DEMOLITION WORK SHALL BE PERFORMED WITH CARE NOT TO DISTURB THE OTHER EXISTING UTILITIES. IF EXISTING UTILITIES ARE DAMAGED BY THE CONTRACTOR, THE EXISTING UTILITIES ARE TO FIXED TO IT'S ORIGINAL CONDITION WITHOUT DELAY, BY AND AT THE EXPENSE OF THE CONTRACTOR.
3. LEGEND SYMBOLS ARE TYPICAL AND LOCATIONS ARE APPROXIMATE AND ARE NOT INTENDED TO LIMIT THE AMOUNT OF DEMOLITION WORK. COORDINATE WITH EXISTING CONDITIONS AND THESE NOTES AND REMOVE ALL APPLICABLE SYSTEMS AND COMPONENTS CONFLICTING WITH FINISHED DESIGN INTENT.
4. EXISTING BRANCH WIRING AND DEVICES SHOWN IS DIAGRAMMATICAL ONLY BASED ON EXISTING DRAWINGS AND SURVEYS. COORDINATE WITH ACTUAL EXISTING CONDITIONS FOR EXACT LOCATIONS.
5. TRENCH, CUT AND REMOVE EXISTING SURFACES AS REQUIRED FOR THE INSTALLATION OF ALL NEW ELECTRICAL PROVISIONS.
6. CONCEALED CONDUIT THAT CANNOT BE REMOVED DUE TO INACCESSIBILITY MAY BE ABANDONED. CONDUCTORS SHALL BE REMOVED AND CONDUIT CUT FLUSH WITH SURFACE.
7. OUTLET BOXES THAT CANNOT BE REMOVED DUE TO FLUSH MOUNTING IN PARTITIONS SHALL BE FILLED WITH GROUT, PATCHED AND FINISHED FLUSH TO MATCH EXISTING WALL SURFACE.
8. EXISTING JUNCTION BOXES MAY BE USED AS NOTED IF OF THE PROPER SIZE. MODIFICATIONS SHALL BE MADE WHEN REQUIRED SUCH AS PROVIDING EXTENSION RINGS, LOCKNUTS, BUSHINGS, ETC.
9. EXISTING PANELBOARDS SHALL BE UTILIZED TO FACILITATE THE WORK AS SHOWN ON THE DRAWINGS. NEW CIRCUIT BREAKERS SHALL BE OF THE SAME MANUFACTURER (WHENEVER POSSIBLE), FRAME SIZE, AIC RATING AND TYPE AS EXISTING. CONTRACTOR SHALL PROVIDE ALL ADDITIONAL MATERIALS FOR PANELBOARDS TO PROPERLY MEET THE INTENT OF THE DRAWINGS.
10. WHEN EXISTING DEVICES, SWITCHES, EQUIPMENT, ETC. ARE NOTED TO BE REMOVED AND THE CIRCUIT(S) SERVING SUCH ITEMS SERVES OTHER ITEMS OR DEVICES WHICH ARE TO BE MAINTAINED, THE CONTRACTOR SHALL REROUTE, EXTEND, MODIFY, ETC. EXISTING CIRCUITS AS REQUIRED TO MAINTAIN COMPLETE AND OPERATING SYSTEMS.
11. IN ALL AREA TO BE REWORKED, THE ELECTRICAL CONTRACTOR SHALL REMOVE ALL EXISTING ELECTRICAL EQUIPMENT (LIGHT FIXTURES, DEVICES, ETC) AND ALL BRANCH CIRCUITS AND FEEDERS NOT REQUIRED FOR CONTINUATION OF EXISTING CIRCUITS TO REMAIN AND REWORK THE AREA AS SHOWN. ANY CIRCUITS BROKEN BY DEMOLITION FOR THE NEW BUILDING ALTERATIONS SHALL BE REPLACED AS REQUIRED. PROVIDE BLANK COVERS FOR ALL UNUSED OUTLETS NEEDED FOR CONTINUITY OF EXISTING CIRCUITS.

Gunn & Associates, P.C.
Consulting Engineers
3102 Highway 14
Millbrook, AL 36054
Tel: 334.285.1273
1200 Providence Park, Suite 200
Birmingham, AL 35242
GA#18-109

SEAY SEAY & LITCHFIELD
1115 South Court Street
Montgomery, AL 36104
(334) 263-5162

Owner:
The Armory Commission of Alabama
1720 Cong WL Dickinson Drive
Montgomery, AL 36109

SS&L Job Number
14057

IFB Job Number
AC-22-B-0004-S

Date
JANUARY 2022

Drawn By
SBW

Checked By
KRG

Revised
-

Project Title
NORTHPORT
FMS #9 RENOVATIONS
NORTHPORT, AL

Sheet Title
ELECTRICAL LEGEND
NOTES

Sheet Number
E0.2

ALABAMA REGISTERED
NO. 26988
PROFESSIONAL
ENGINEER
KENNETH RAY GUNN JR.
01-07-22

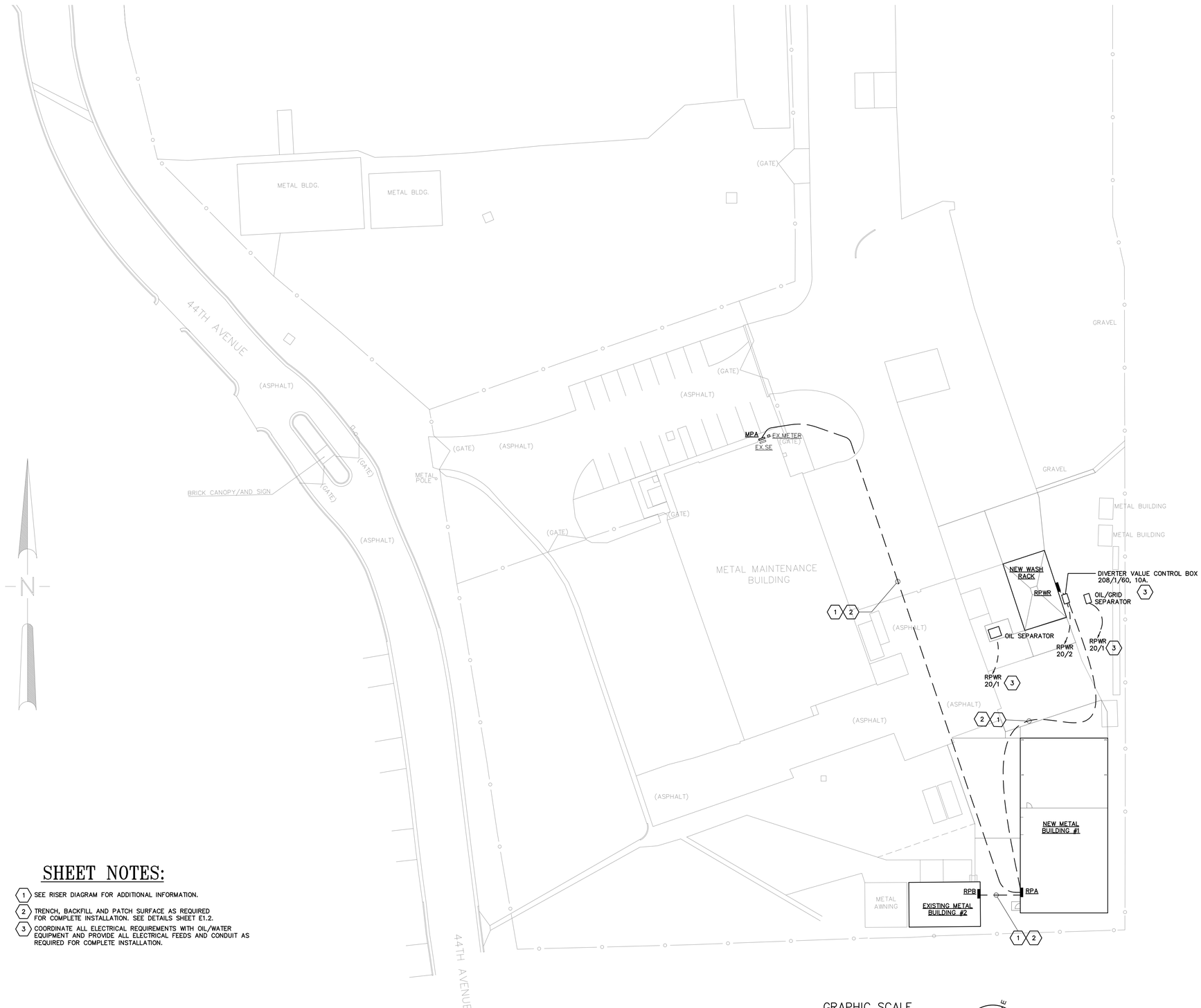

SHEET NOTES:

1. SEE RISER DIAGRAM FOR ADDITIONAL INFORMATION.
2. TRENCH, BACKFILL AND PATCH SURFACE AS REQUIRED FOR COMPLETE INSTALLATION. SEE DETAILS SHEET E1.2.
3. COORDINATE ALL ELECTRICAL REQUIREMENTS WITH OIL/WATER EQUIPMENT AND PROVIDE ALL ELECTRICAL FEEDS AND CONDUIT AS REQUIRED FOR COMPLETE INSTALLATION.

1 / E1.0 SITE PLAN – ELECTRICAL
SCALE: 1" = 1'-0"

GRAPHIC SCALE
0 15' 30' 60'
1" = 30'-0"

Gunn & Associates, P.C.
Consulting Engineers
3102 Highway 14
Millbrook, AL 36054
Tel: 334.285.1273
1200 Providence Park, Suite 200
Birmingham, AL 35242
GA#18-109

SEAY SEAY & LITCHFIELD
1115 South Court Street
Montgomery, AL 36104
(334) 263-5162

Owner:
The Armory Commission of Alabama
1720 Cong WL Dickinson Drive
Montgomery, AL 36109

SS&L Job Number
14057

IFB Job Number
AC-22-B-0004-S

Date
JANUARY 2022

Drawn By
SBW

Checked By
KRG

Revised
–

Project Title
NORTHPORT
FMS #9 RENOVATIONS
NORTHPORT, AL

Sheet Title
SITE PLAN
– ELECTRICAL

Sheet Number
E1.1

ALABAMA REGISTERED NO. 26988 PROFESSIONAL ENGINEER KENNETH RAY GUNN JR
01-07-22

DIMENSION BLOCK		
REF	SI	ENGLISH
A	305mm	1'-0"
B	152mm	0'-6"
C	51mm	0'-2"
D	203mm	0'-8"
E	76mm	0'-3"

NOTES:

1. TRENCH/CUT EXISTING SURFACES. BACKFILL/PATCH/REPAIR ALL SURFACES AS SHOWN.
2. TRENCH DEPTH AND WIDTH SHALL BE AS REQUIRED FOR THE INSTALLATION OF THE RACEWAY LINE SPECIFIED. SEE APPLICABLE RACEWAY LINE SECTION.
3. PAVEMENT REMOVAL SHALL BE COMPLETE FROM THE SITE AND EXTEND BEYOND THE TRENCH WIDTH AS INDICATED.
4. CONCRETE SHALL BE CLASS A.
5. MATCH THICKNESS OF EXISTING CONCRETE PAVEMENT 8" (20.32cm) MIN.
6. LEAVE DRILLED FACE OF EXISTING PAVEMENT IRREGULAR TO INSURE KEY TO NEW CONCRETE PAVEMENT.
7. ALL EXISTING JOINTS TO BE RE-ESTABLISHED.
8. REINFORCING BARS SHALL MEET ASTM A615, A616 OR A617, GRADE 40. REINFORCING BARS SHALL BE INSTALLED THE CONTINUOUS LENGTH OF CONCRETE PAVEMENT.
9. PLASTIC MARKER TAPE SHALL BE RED AND CONTAIN FOIL BACKING OR EQUIVALENT TO ENABLE DETECTION BY A METAL DETECTOR. SEE SPECIFICATIONS.

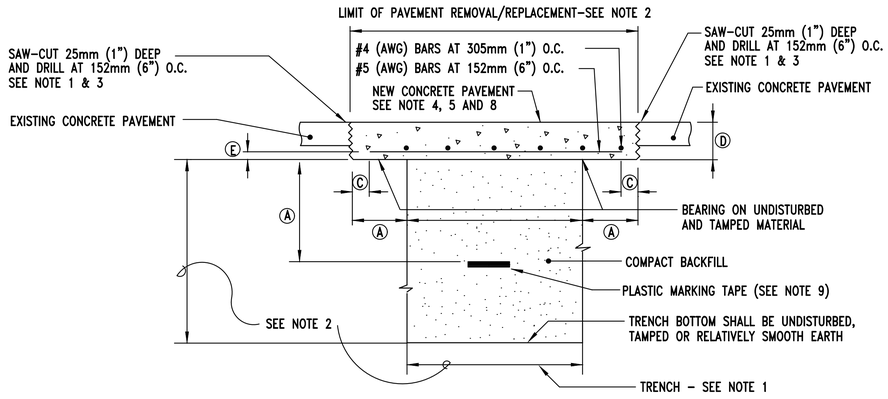

1 / E1.2 SECTION - TYPICAL TRENCH/BACKFILL/REPAIR RIGID PAVEMENT
NO SCALE

NOTES:

1. TRENCH/CUT EXISTING SURFACES. BACKFILL/PATCH/REPAIR AND INSTALL NEW SOD.
2. TRENCH DEPTH AND WIDTH SHALL BE AS REQUIRED FOR THE INSTALLATION OF THE RACEWAY LINE SPECIFIED. SEE APPLICABLE RACEWAY LINE SECTION.
3. PLASTIC MARKER TAPE SHALL BE RED AND CONTAIN FOIL BACKING OR EQUIVALENT TO ENABLE DETECTION BY A METAL DETECTOR. SEE SPECIFICATIONS.

DIMENSION BLOCK		
REF	SI	ENGLISH
A	305mm	1'-0"
B	51mm	0'-2"

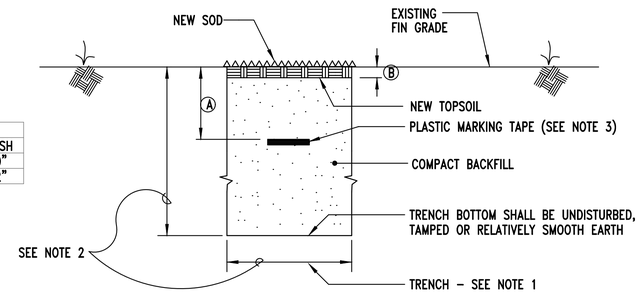

2 / E1.2 SECTION - TYPICAL TRENCH/BACKFILL/REPAIR SODDED AREAS
NO SCALE

DIMENSION BLOCK		
REF	SI	ENGLISH
A	305mm	1'-0"
B	152mm	0'-6"
C	51mm	0'-2"
D	203mm	0'-8"
E	76mm	0'-3"

NOTES:

1. TRENCH/CUT EXISTING SURFACES. BACKFILL/PATCH/REPAIR ALL SURFACES AS SHOWN.
2. TRENCH DEPTH AND WIDTH SHALL BE AS REQUIRED FOR THE INSTALLATION OF THE RACEWAY LINE SPECIFIED. SEE APPLICABLE RACEWAY LINE SECTION.
3. PAVEMENT REMOVAL SHALL BE COMPLETE FROM THE SITE AND EXTEND BEYOND THE TRENCH WIDTH AS INDICATED.
4. CONCRETE SHALL BE CLASS A.
5. MATCH THICKNESS OF EXISTING BITUMINOUS SURFACE, OR 38mm (1.5") MINIMUM, WHICHEVER IS GREATER.
6. REINFORCING BARS SHALL MEET ASTM A615, A616 OR A617, GRADE 40. REINFORCING BARS SHALL BE INSTALLED THE CONTINUOUS LENGTH OF CONCRETE SLAB.
7. PLASTIC MARKER TAPE SHALL BE RED AND CONTAIN FOIL BACKING OR EQUIVALENT TO ENABLE DETECTION BY A METAL DETECTOR. SEE SPECIFICATIONS.

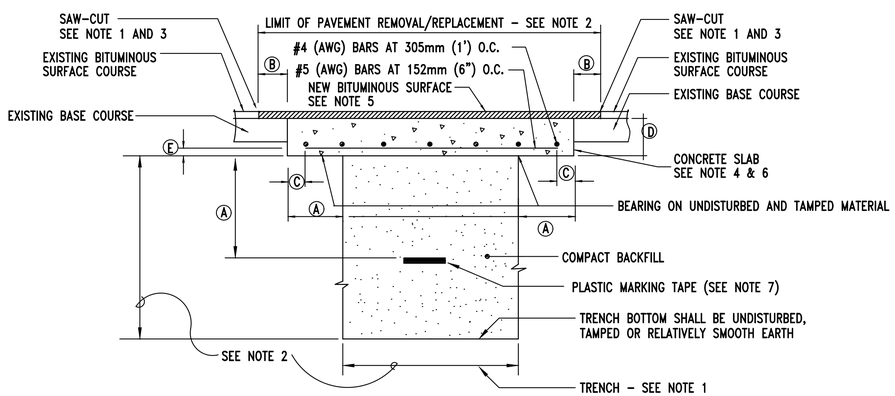

3 / E1.3 SECTION - TYPICAL TRENCH/BACKFILL/REPAIR FLEXIBLE PAVEMENT
NO SCALE

Gunn & Associates, P.C.
Consulting Engineers
3102 Highway 14
Millbrook, AL 36054
Tel: 334.285.1273
1200 Providence Park, Suite 200
Birmingham, AL 35242
GA#18-109

SEAY SEAY & LITCHFIELD
1115 South Court Street
Montgomery, AL 36104
(334) 263-5162

Owner:
The Armory Commission of Alabama
1720 Cong WL Dickinson Drive
Montgomery, AL 36109

SS&L Job Number
14057

IFB Job Number
AC-22-B-0004-S

Date
JANUARY 2022

Drawn By
SBW

Checked By
KRG

Revised
-

Project Title
NORTHPORT
FMS #9 RENOVATIONS
NORTHPORT, AL

Sheet Title
SITE PLAN
DETAILS

Sheet Number
E1.2

ALABAMA REGISTERED
NO. 26988
PROFESSIONAL ENGINEER
KENNETH RAY GUNN, JR.
01-07-22

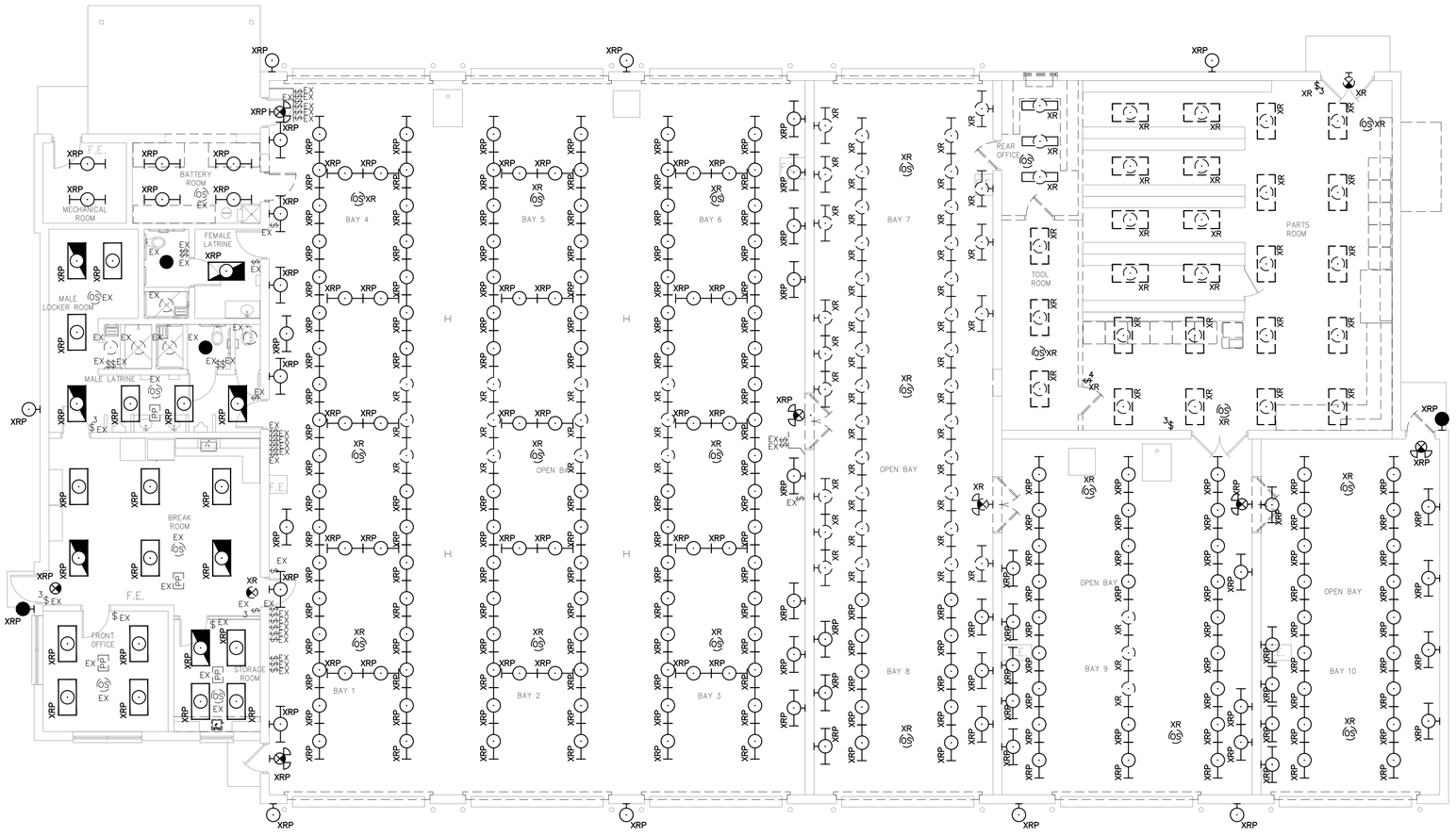

1 / E1.3 EXISTING MAINTENANCE BUILDING FLOOR PLAN – DEMOLITION LIGHTING
SCALE: 1/8"=1'–0"

GRAPHIC SCALE
0 4 8 16 24
1/8" = 1'–0"

Gunn & Associates, P.C.
Consulting Engineers
3102 Highway 14
Millbrook, AL 36054
Tel: 334.285.1273
1200 Providence Park, Suite 200
Birmingham, AL 35242
GA#18-109

SEAY SEAY & LITCHFIELD
1115 South Court Street
Montgomery, AL 36104
(334) 263-5162

Owner:
The Armory Commission of Alabama
1720 Cong WL Dickinson Drive
Montgomery, AL 36109

SS&L Job Number
14057

IFB Job Number
AC-22-B-0004-S

Date
JANUARY 2022

Drawn By
SBW

Checked By
KRG

Revised
–

Project Title
NORTHPORT
FMS #9 RENOVATIONS
NORTHPORT, AL

Sheet Title
EXISTING MAINTENANCE
BUILDING FLOOR PLAN
DEMOLITION – LIGHTING

Sheet Number
E1.3

ALABAMA REGISTERED
NO. 26988
PROFESSIONAL
ENGINEER
KENNETH RAY GUNN, JR.
01-07-22

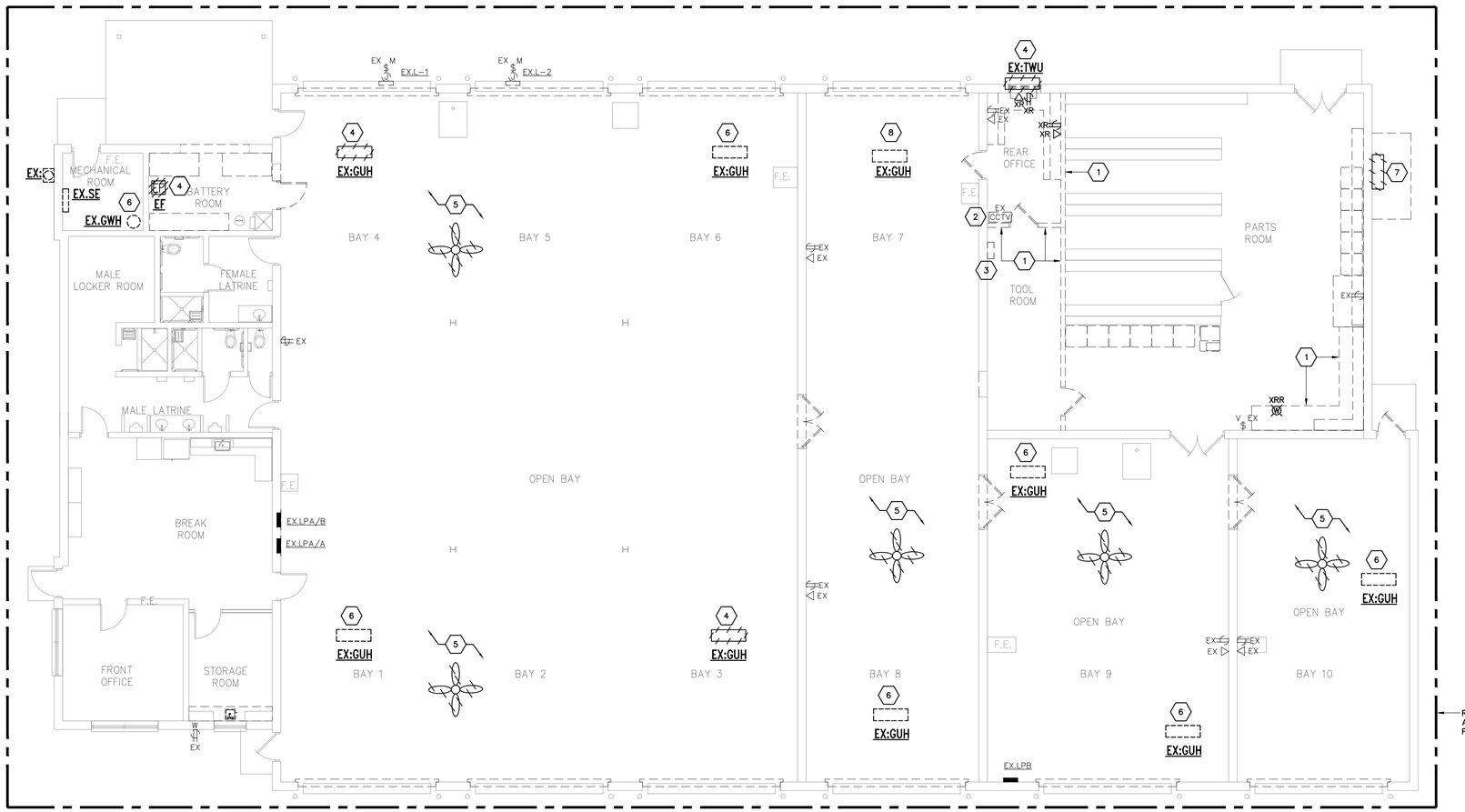

1 E1.4 MAINTENANCE BUILDING FLOOR PLAN – DEMOLITION POWER AND AUXILIARY

SCALE: 1/8"=1'-0"

GRAPHIC SCALE

0 4 8 16 24

1/8" = 1'-0"

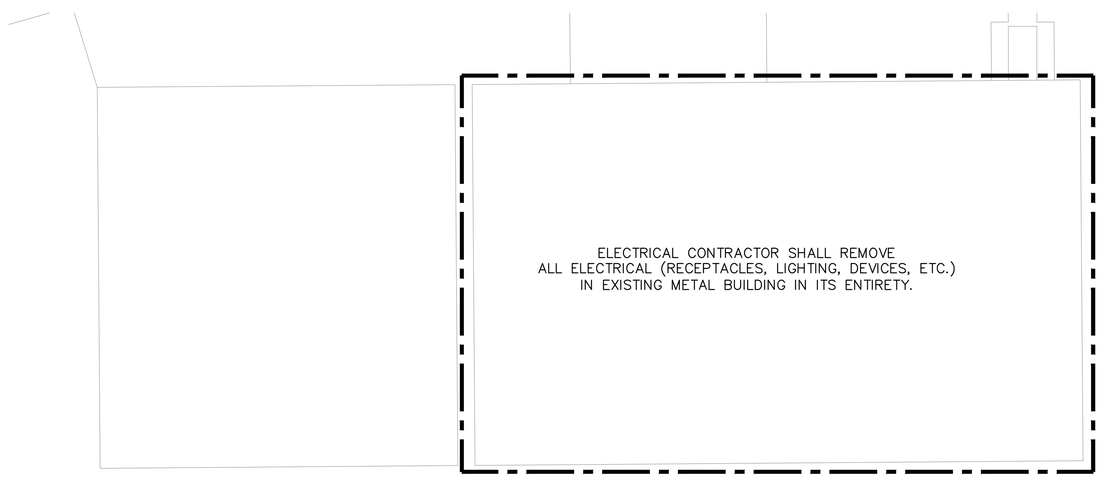

2 E1.4 METAL BUILDING #2 – ELECTRICAL DEMOLITION

SCALE: 1/8"=1'-0"

GRAPHIC SCALE

0 4 8 16 24

1/8" = 1'-0"

GENERAL NOTES:

1. CONTRACTOR SHALL COORDINATE WITH MECHANICAL CONTRACTOR ON EXISTING LOW VOLTAGE WIRING/CABLING TO REMAIN OR TO BE REMOVED FOR MECHANICAL EQUIPMENT.

SHEET NOTES:

1. REMOVE ALL ELECTRICAL FROM WALLS OR CASEWORK TO BE REMOVED. INTERCEPT AND EXTEND CIRCUITRY TO EXISTING DEVICES TO REMAIN.
2. MAINTAIN EXISTING BOSCH SECURITY CAMERA NVR. REMOVE FOR DEMOLITION AND REINSTALL ONCE NEW WALLS ARE INSTALLED. INTERCEPT AND EXTEND CIRCUITING AS REQUIRED.
3. MAINTAIN EXISTING COMMUNICATION WALL RACK.
4. EXISTING DEVICE, ELECTRICAL EQUIPMENT & CIRCUITRY TO BE REMOVED BACK TO POINT OF ORIGIN.
5. EXISTING VEHICLE EXHAUST SYSTEM, FANS, ASSOCIATED ELECTRICAL EQUIPMENT/DEVICES & CIRCUITRY SHALL BE REMOVED BACK TO POINT OF ORIGIN.
6. EXISTING DEVICE TO REMAIN.
7. EXISTING AIR COMPRESSOR, ASSOCIATED ELECTRICAL EQUIPMENT/DEVICES & CIRCUITRY SHALL BE REMOVED BACK TO POINT OF ORIGIN.
8. EXISTING DEVICE TO BE RELOCATED. CONTRACTOR SHALL INTERCEPT AND EXTEND EXISTING CIRCUIT TO NEW LOCATION AS REQUIRED.

Gunn & Associates, P.C.
Consulting Engineers
3102 Highway 14
Millbrook, AL 36054
Tel: 334.285.1273
1200 Providence Park, Suite 200
Birmingham, AL 35242
GA#18-109

SEAY SEAY & LITCHFIELD
1115 South Court Street
Montgomery, AL 36104
(334) 263-5162

Owner:
The Armory Commission of Alabama
1720 Cong WL Dickinson Drive
Montgomery, AL 36109

SS&L Job Number
14057

IFB Job Number
AC-22-B-0004-S

Date
JANUARY 2022

Drawn By
SBW

Checked By
KRG

Revised
–

Project Title
NORTHPORT
FMS #9 RENOVATIONS
NORTHPORT, AL

Sheet Title
MAINTENANCE AND METAL BUILDING DEMOLITION

Sheet Number
E1.4

ALABAMA REGISTERED
NO. 26988
PROFESSIONAL
ENGINEER
KENNETH RAY GUNN, JR.
01-07-22

Gunn & Associates, P.C.
Consulting Engineers
3102 Highway 14
Millbrook, AL 36054
Tel: 334.285.1273
1200 Providence Park, Suite 200
Birmingham, AL 35242
GA#18-109

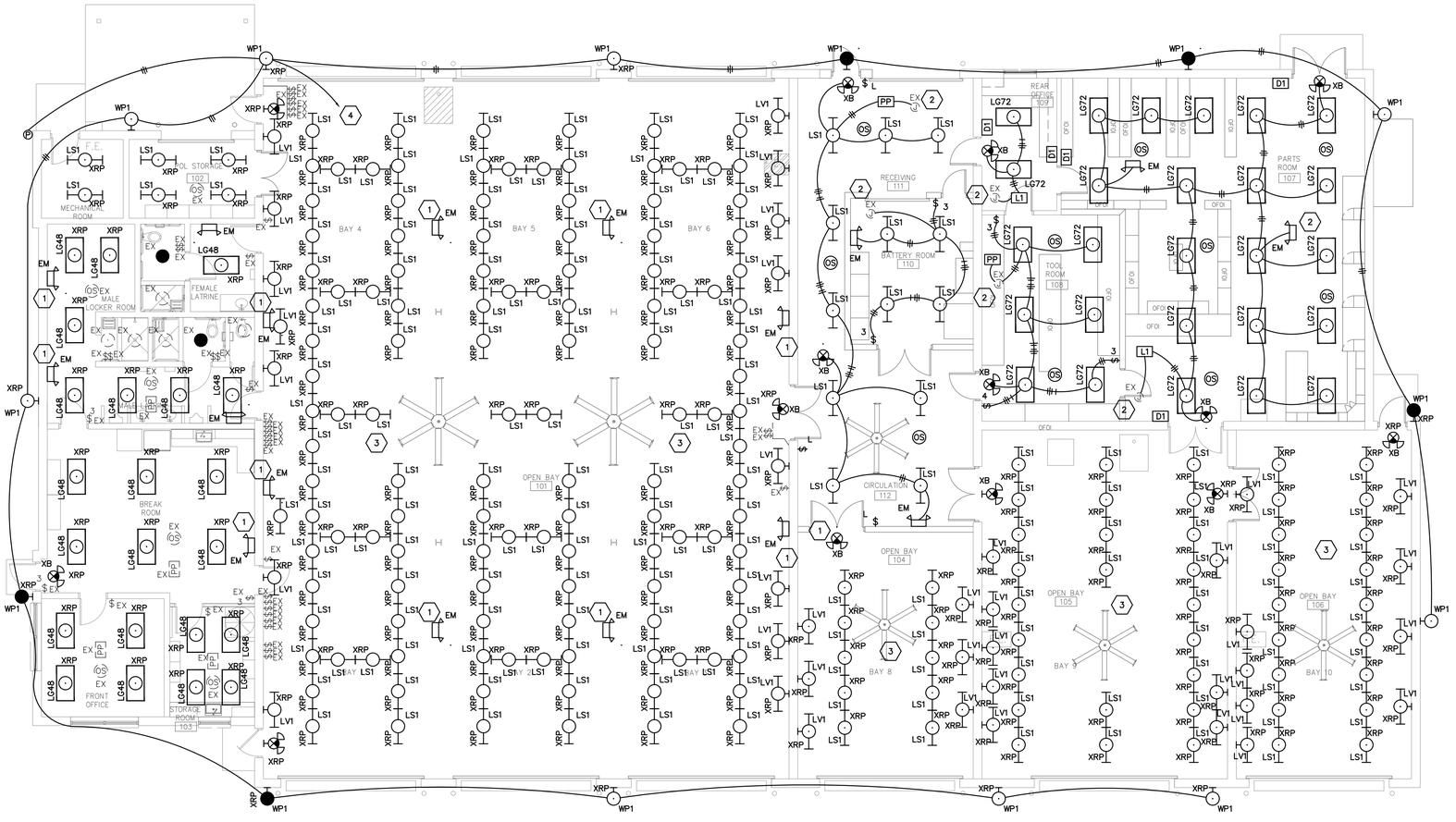

SHEET NOTES:

1. CONNECT NEW EMERGENCY UNIT TO NEAREST UNSWITCHED HOT.
2. CONNECT TO EXISTING UNSWITCH LIGHTING BRANCH CIRCUITING AT CEILING.
3. REWORK EXISTING LIGHTING CONTROL IN THIS AREAS FOR REVISED LAYOUT. PROVIDE ADDITIONAL (BRANCH CIRCUITING, ETC.) AS REQUIRED FOR COMPLETE OPERATION.
4. CONNECT EXTERIOR LIGHTING BRANCH CIRCUITING TO EXISTING EXTERIOR LIGHTING BRANCH CIRCUITING HOMERUN.

1 / E2.1 MAINTENANCE BUILDING FLOOR PLAN – LIGHTING
SCALE: 1/8"=1'-0"

GRAPHIC SCALE
0 4 8 16 24
1/8" = 1'-0"

SEAY SEAY & LITCHFIELD
1115 South Court Street
Montgomery, AL 36104
(334) 263-5162

Owner:
The Armory Commission of Alabama
1720 Cong WL Dickinson Drive
Montgomery, AL 36109

SS&L Job Number
14057

IFB Job Number
AC-22-B-0004-S

Date
JANUARY 2022

Drawn By
SBW

Checked By
KRG

Revised
–

Project Title
NORTHPORT
FMS #9 RENOVATIONS
NORTHPORT, AL

Sheet Title
MAINTENANCE BUILDING
FLOOR PLAN – LIGHTING

Sheet Number
E2.1

ALABAMA REGISTERED
NO. 26988
PROFESSIONAL ENGINEER
KENNETH RAY GUNN, JR.
01-07-22

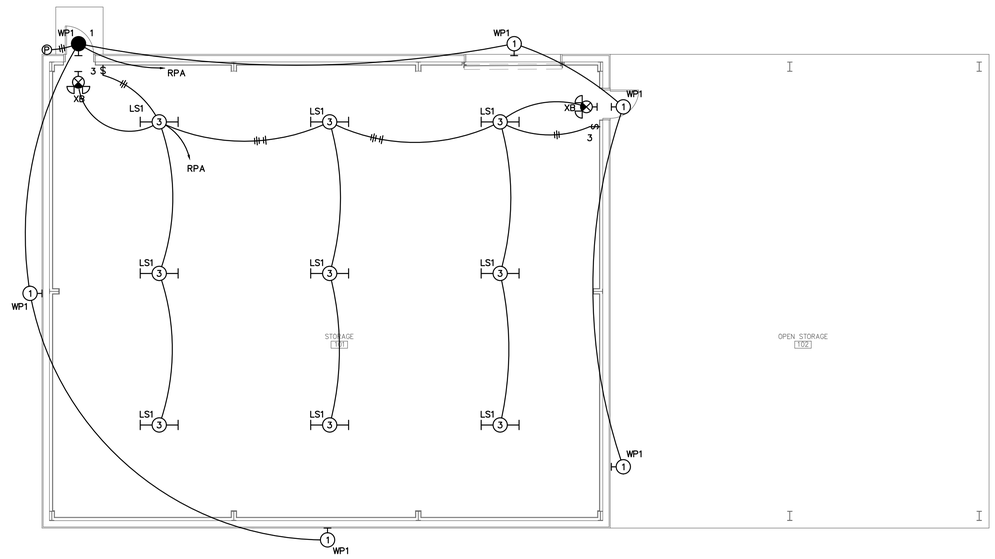

1 E2.2 NEW METAL BUILDING #1 – LIGHTING
SCALE: 1/8"=1'-0"

GRAPHIC SCALE
0 4 8 16 24
1/8" = 1'-0"

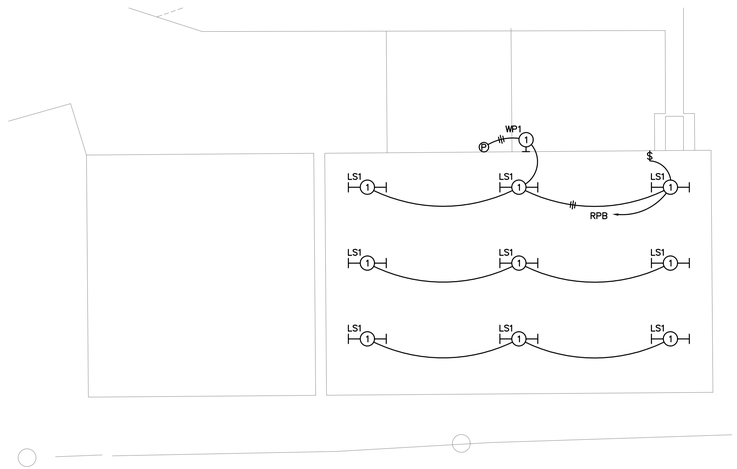

2 E2.2 METAL BUILDING #2 – LIGHTING
SCALE: 1/8"=1'-0"

GRAPHIC SCALE
0 4 8 16 24
1/8" = 1'-0"

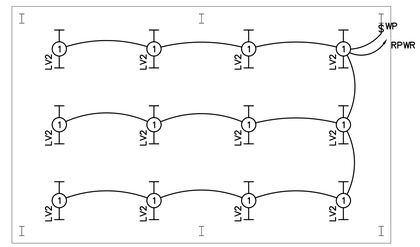

3 E2.2 NEW WASH RACK BUILDING – LIGHTING
SCALE: 1/8"=1'-0"

GRAPHIC SCALE
0 4 8 16 24
1/8" = 1'-0"

Gunn & Associates, P.C.
Consulting Engineers
3102 Highway 14
Millbrook, AL 36054
Tel: 334.285.1273
1200 Providence Park, Suite 200
Birmingham, AL 35242
GA#18-109

SEAY SEAY & LITCHFIELD
1115 South Court Street
Montgomery, AL 36104
(334) 263-5162

Owner:
The Armory Commission of Alabama
1720 Cong WL Dickinson Drive
Montgomery, AL 36109

SS&L Job Number
14057

IFB Job Number
AC-22-B-0004-S

Date
JANUARY 2022

Drawn By
SBW

Checked By
KRG

Revised
–

Project Title
NORTHPORT
FMS #9 RENOVATIONS
NORTHPORT, AL

Sheet Title
METAL BUILDING #1, METAL BUILDING #2, WASH RACK LIGHTING

Sheet Number
E2.2

ALABAMA REGISTERED
No. 26985
PROFESSIONAL ENGINEER
KENNETH RAY GUNN, JR.
01-07-22

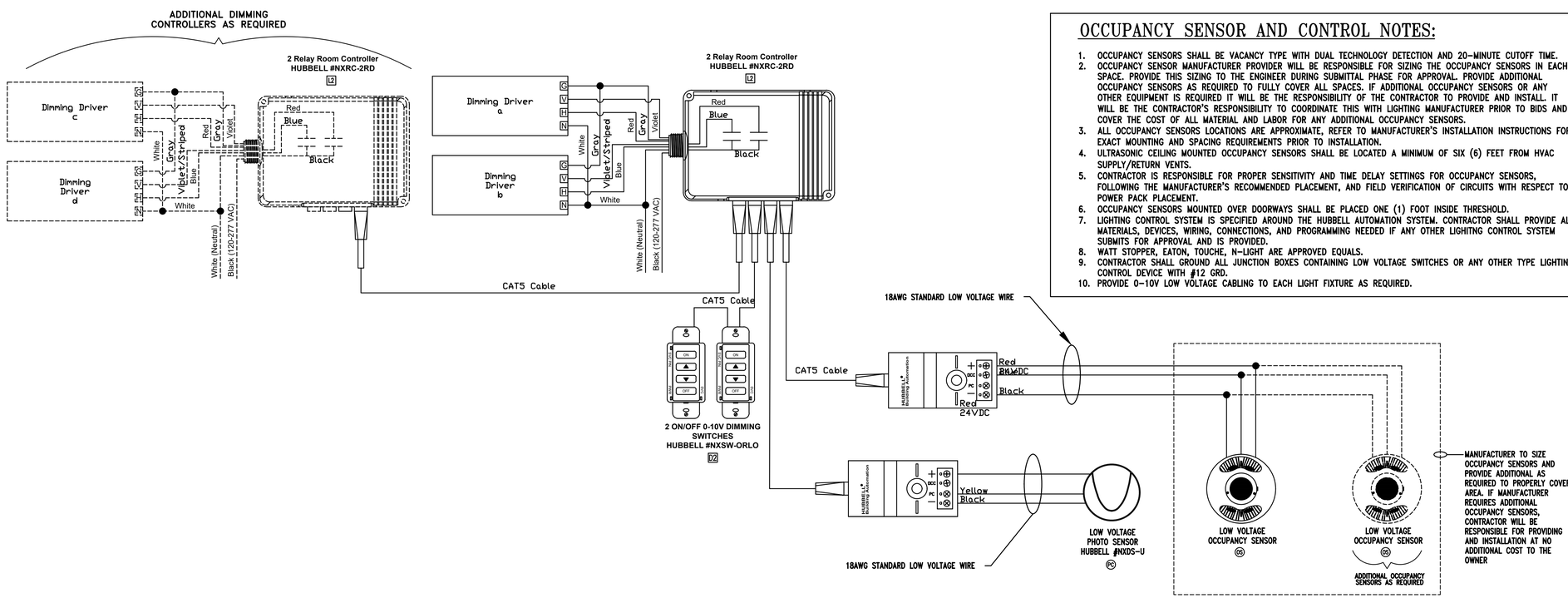

OCCUPANCY SENSOR AND CONTROL NOTES:

1. OCCUPANCY SENSORS SHALL BE VACANCY TYPE WITH DUAL TECHNOLOGY DETECTION AND 20-MINUTE CUTOFF TIME.
2. OCCUPANCY SENSOR MANUFACTURER PROVIDER WILL BE RESPONSIBLE FOR SIZING THE OCCUPANCY SENSORS IN EACH SPACE. PROVIDE THIS SIZING TO THE ENGINEER DURING SUBMITTAL PHASE FOR APPROVAL. PROVIDE ADDITIONAL OCCUPANCY SENSORS AS REQUIRED TO FULLY COVER ALL SPACES. IF ADDITIONAL OCCUPANCY SENSORS OR ANY OTHER EQUIPMENT IS REQUIRED IT WILL BE THE RESPONSIBILITY OF THE CONTRACTOR TO PROVIDE AND INSTALL. IT WILL BE THE CONTRACTOR'S RESPONSIBILITY TO COORDINATE THIS WITH LIGHTING MANUFACTURER PRIOR TO BIDS AND COVER THE COST OF ALL MATERIAL AND LABOR FOR ANY ADDITIONAL OCCUPANCY SENSORS.
3. ALL OCCUPANCY SENSORS LOCATIONS ARE APPROXIMATE, REFER TO MANUFACTURER'S INSTALLATION INSTRUCTIONS FOR EXACT MOUNTING AND SPACING REQUIREMENTS PRIOR TO INSTALLATION.
4. ULTRASONIC CEILING MOUNTED OCCUPANCY SENSORS SHALL BE LOCATED A MINIMUM OF SIX (6) FEET FROM HVAC SUPPLY/RETURN VENTS.
5. CONTRACTOR IS RESPONSIBLE FOR PROPER SENSITIVITY AND TIME DELAY SETTINGS FOR OCCUPANCY SENSORS, FOLLOWING THE MANUFACTURER'S RECOMMENDED PLACEMENT, AND FIELD VERIFICATION OF CIRCUITS WITH RESPECT TO POWER PACK PLACEMENT.
6. OCCUPANCY SENSORS MOUNTED OVER DOORWAYS SHALL BE PLACED ONE (1) FOOT INSIDE THRESHOLD.
7. LIGHTING CONTROL SYSTEM IS SPECIFIED AROUND THE HUBBELL AUTOMATION SYSTEM. CONTRACTOR SHALL PROVIDE ALL MATERIALS, DEVICES, WIRING, CONNECTIONS, AND PROGRAMMING NEEDED IF ANY OTHER LIGHITNG CONTROL SYSTEM SUBMITS FOR APPROVAL AND IS PROVIDED.
8. WATT STOPPER, EATON, TOUCHE, N-LIGHT ARE APPROVED EQUALS.
9. CONTRACTOR SHALL GROUND ALL JUNCTION BOXES CONTAINING LOW VOLTAGE SWITCHES OR ANY OTHER TYPE LIGHTING CONTROL DEVICE WITH #12 GRD.
10. PROVIDE 0-10V LOW VOLTAGE CABLING TO EACH LIGHT FIXTURE AS REQUIRED.

1 E2.3 TYPICAL MULTIPLE OCCUPANCY SENSOR, PHOTOCELL, MULTIPLE 0-10V DIMMING ZONES
NO SCALE

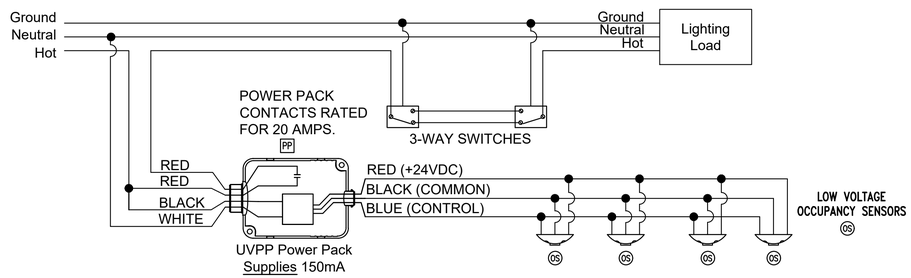

2 E2.3 TYPICAL 3-WAY SWITCHING OCCUPANCY SENSOR WIRING DIAGRAM
NO SCALE

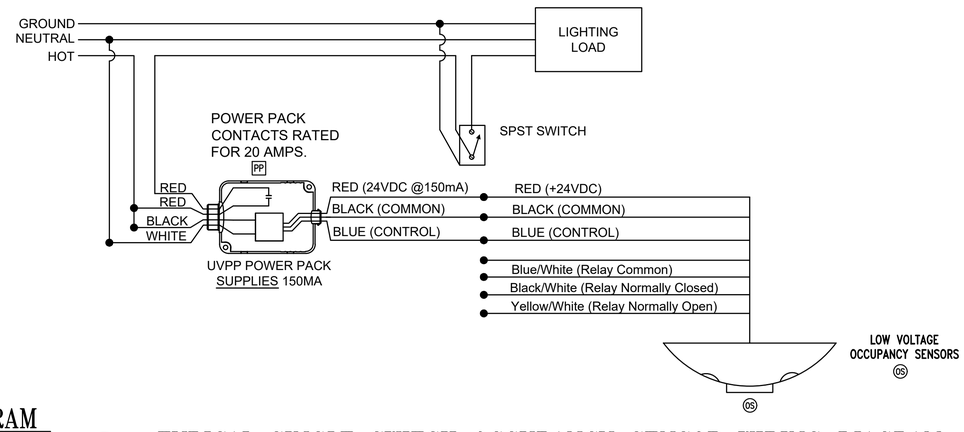

3 E2.3 TYPICAL SINGLE SWITCH OCCUPANCY SENSOR WIRING DIAGRAM
NO SCALE

Gunn & Associates, P.C.
Consulting Engineers
3102 Highway 14
Millbrook, AL 36054
Tel: 334.285.1273
1200 Providence Park, Suite 200
Birmingham, AL 35242
GA#18-109

SEAY SEAY & LITCHFIELD
1115 South Court Street
Montgomery, AL 36104
(334) 263-5162

Owner:
The Armory Commission of Alabama
1720 Cong WL Dickinson Drive
Montgomery, AL 36109

SS&L Job Number
14057

IFB Job Number
AC-22-B-0004-S

Date
JANUARY 2022

Drawn By
SBW

Checked By
KRG

Revised
-

Project Title
NORTHPORT
FMS #9 RENOVATIONS
NORTHPORT, AL

Sheet Title
LIGHTING CONTROLS

Sheet Number
E2.3

ALABAMA REGISTERED PROFESSIONAL ENGINEER NO. 26988 KENNETH RAY GUNN, JR. 01-07-22

Gunn & Associates, P.C.
Consulting Engineers
3102 Highway 14
Millbrook, AL 36054
Tel: 334.285.1273
1200 Providence Park, Suite 200
Birmingham, AL 35242
GA#18-109

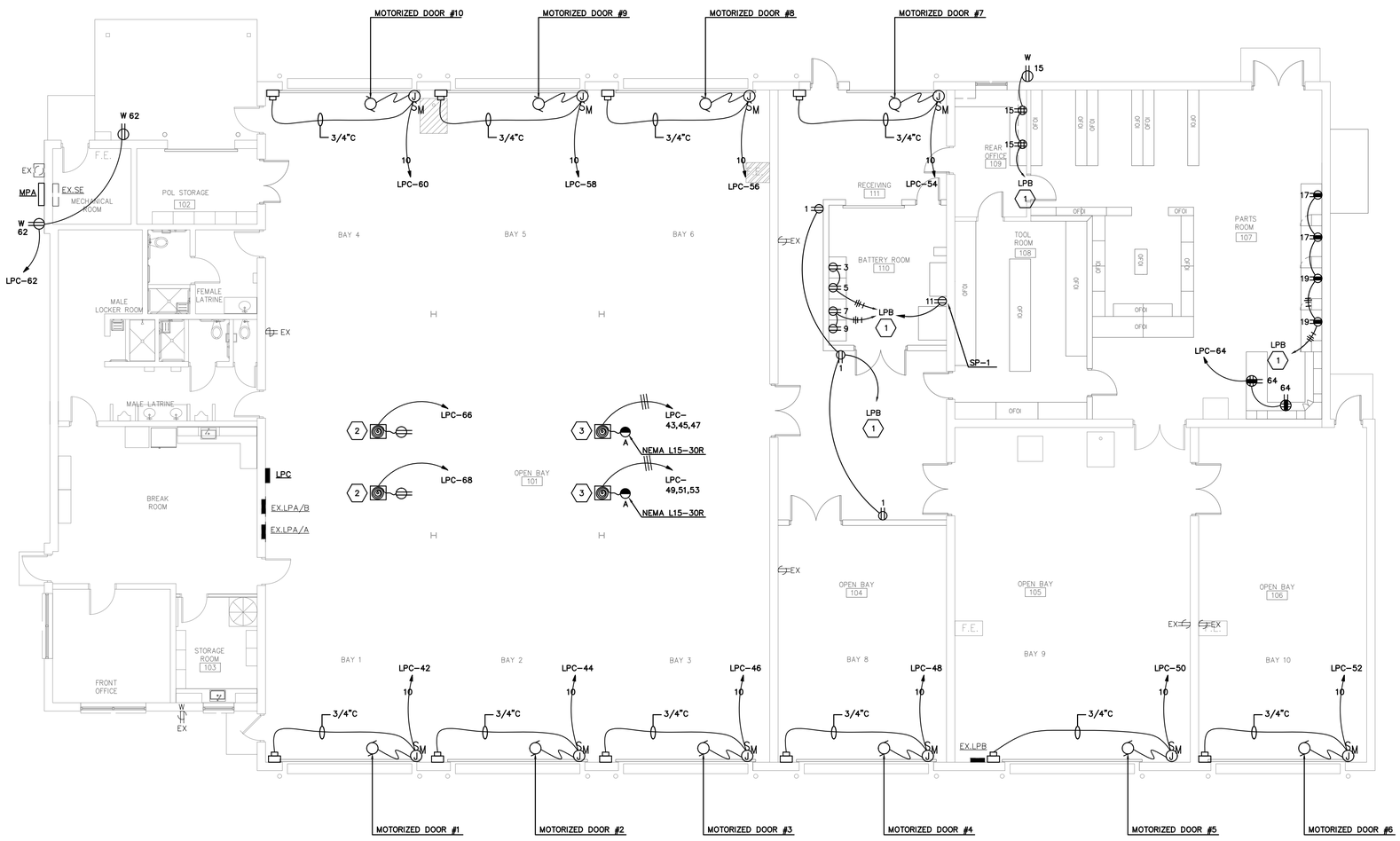

SHEET NOTES:

1. CIRCUIT NUMBERS ARE FOR REFERENCE ONLY. VERIFY IN FIELD. CONNECT TO NEW 20/1 BREAKER IN SPACE OF EXISTING PANELBOARD NOTED. NEW BREAKER SHALL MATCH EXISTING (MANUFACTURER, VOLTAGE, RATINGS, ETC.) BREAKER SHALL BE 42K AIC. PROVIDE NEW AND COMPLETE TYPE WRITTEN BRANCH DIRECTORY.
2. COORDINATE EXACT LOCATION OF 110V CORD AND REEL DEVICE WITH OWNER PRIOR TO ROUGH IN.
3. COORDINATE EXACT LOCATION OF 120/208V, 3 PHASE, 30 AMP CORD AND REEL DEVICE WITH OWNER PRIOR TO ROUGH IN. (VERIFY EXACT NEMA CONFIGURATION WITH OWNER PRIOR TO BIDS)

1 / E3.1 MAINTENANCE BUILDING FLOOR PLAN – POWER
SCALE: 1/8"=1'-0"

GRAPHIC SCALE
0 4 8 16 24
1/8" = 1'-0"

SEAY SEAY & LITCHFIELD

1115 South Court Street
Montgomery, AL 36104
(334) 263-5162

Owner:
The Armory Commission of Alabama
1720 Cong WL Dickinson Drive
Montgomery, AL 36109

SS&L Job Number
14057

IFB Job Number
AC-22-B-0004-S

Date
JANUARY 2022

Drawn By
SBW

Checked By
KRG

Revised
–

Project Title
NORTHPORT
FMS #9 RENOVATIONS
NORTHPORT, AL

Sheet Title
MAINTENANCE BUILDING
FLOOR PLAN – POWER

Sheet Number
E3.1

ALABAMA REGISTERED
NO. 26985
PROFESSIONAL
01-07-22
ENGINEER
KENNETH RAY GUNN, JR.

Gunn & Associates, P.C.
Consulting Engineers
3102 Highway 14
Millbrook, AL 36054
Tel: 334.285.1273
1200 Providence Park, Suite 200
Birmingham, AL 35242
GA#18-109

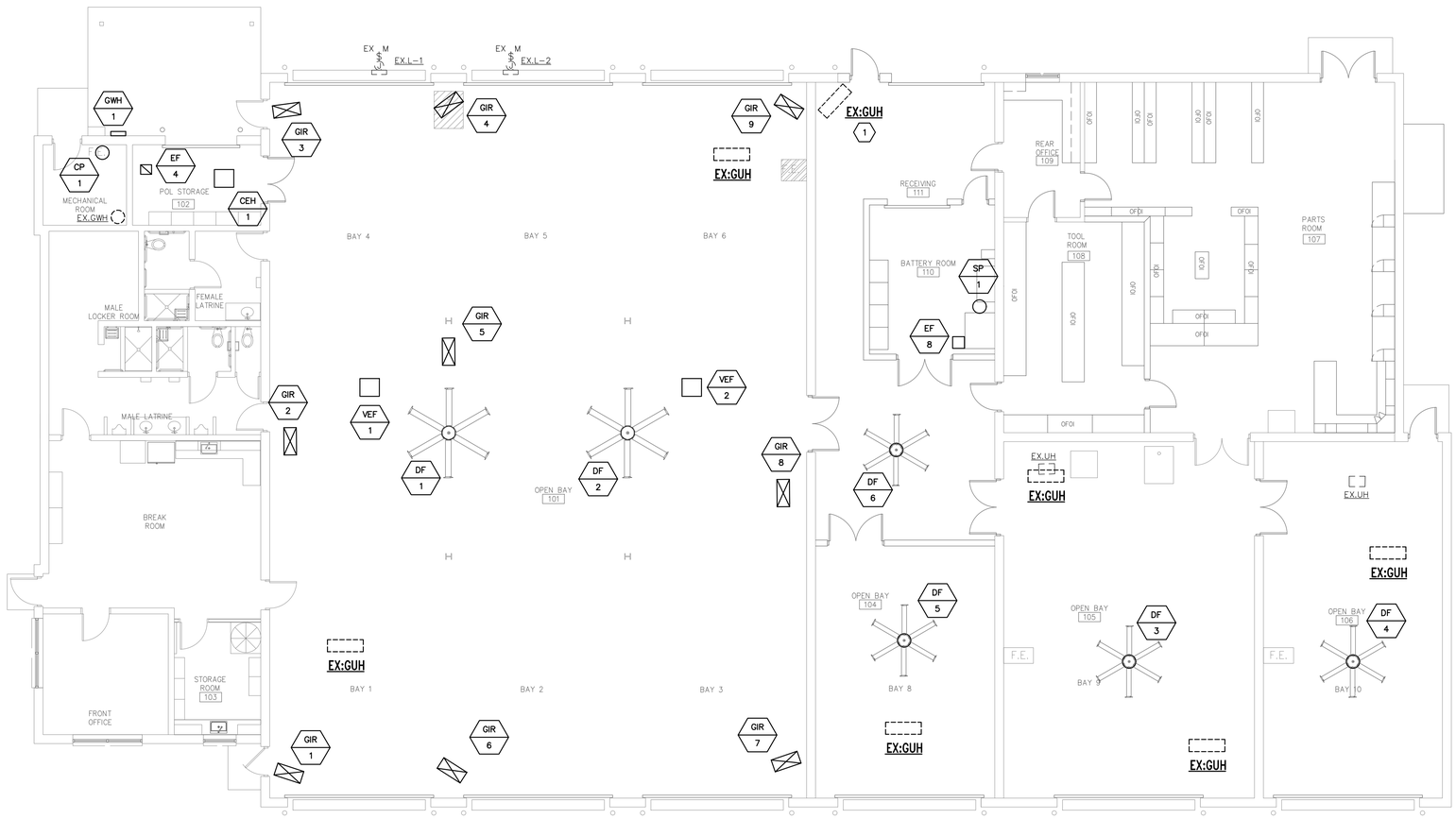

SHEET NOTES:

1. EXISTING DEVICE THAT HAS BEEN RELOCATED. CONTRACTOR SHALL INTERCEPT AND EXTEND EXISTING CIRCUIT TO NEW LOCATION AS REQUIRED.

GENERAL NOTES:

1. CONTRACTOR SHALL COORDINATE WITH GENERAL EQUIPMENT SCHEDULE ON SHEET E3.4 FOR CIRCUITRY REQUIREMENTS OF TAGGED EQUIPMENT.

1 / E3.2 MAINTENANCE BUILDING FLOOR PLAN – EQUIPMENT POWER
SCALE: 1/8"=1'-0"

GRAPHIC SCALE
0 4 8 16 24
1/8" = 1'-0"

SEAY SEAY & LITCHFIELD
1115 South Court Street
Montgomery, AL 36104
(334) 263-5162

Owner:
The Armory Commission of Alabama
1720 Cong WL Dickinson Drive
Montgomery, AL 36109

SS&L Job Number
14057

IFB Job Number
AC-22-B-0004-S

Date
JANUARY 2022

Drawn By
SBW

Checked By
KRG

Revised
–

Project Title
NORTHPORT
FMS #9 RENOVATIONS
NORTHPORT, AL

Sheet Title
MAINTENANCE BUILDING
FLOOR PLAN
EQUIPMENT POWER

Sheet Number
E3.2

ALABAMA REGISTERED
NO. 26985
PROFESSIONAL ENGINEER
KENNETH RAY GUNN, JR.
01-07-22

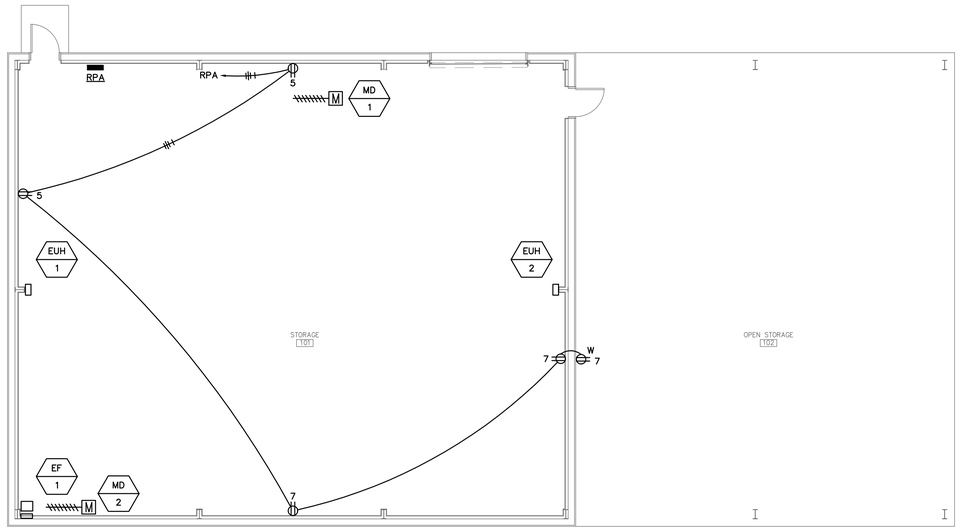

1 / E3.3 NEW METAL BUILDING #1 – POWER
SCALE: 1/8"=1'-0"

GRAPHIC SCALE
0 4 8 16 24
1/8" = 1'-0"

GENERAL NOTES:

1. CONTRACTOR SHALL COORDINATE WITH GENERAL EQUIPMENT SCHEDULE ON SHEET E3.4 FOR CIRCUITRY REQUIREMENTS OF TAGGED EQUIPMENT.

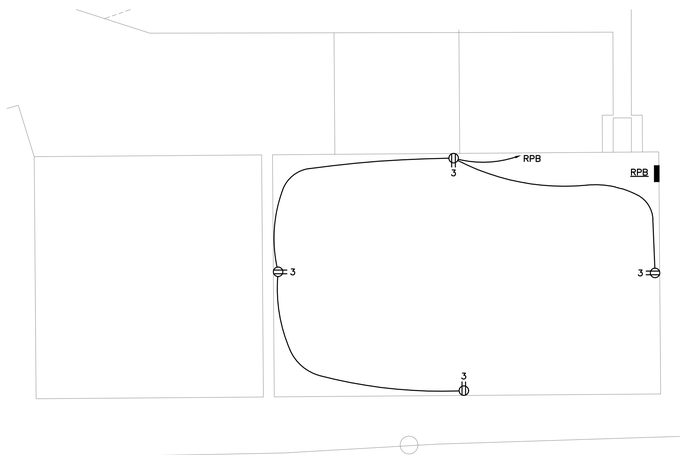

2 / E3.3 METAL BUILDING #2 – POWER
SCALE: 1/8"=1'-0"

GRAPHIC SCALE
0 4 8 16 24
1/8" = 1'-0"

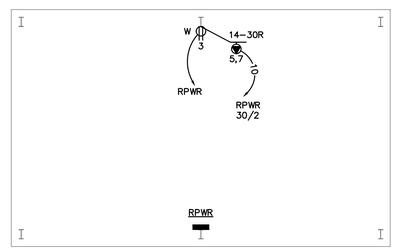

3 / E3.3 NEW WASH RACK BUILDING – POWER
SCALE: 1/8"=1'-0"

GRAPHIC SCALE
0 4 8 16 24
1/8" = 1'-0"

Gunn & Associates, P.C.
Consulting Engineers
3102 Highway 14
Millbrook, AL 36054
Tel: 334.285.1273
1200 Providence Park, Suite 200
Birmingham, AL 35242
GA#18-109

SEAY SEAY & LITCHFIELD
1115 South Court Street
Montgomery, AL 36104
(334) 263-5162

Owner:
The Armory Commission of Alabama
1720 Cong WL Dickinson Drive
Montgomery, AL 36109

SS&L Job Number
14057

IFB Job Number
AC-22-B-0004-S

Date
JANUARY 2022

Drawn By
SBW

Checked By
KRG

Revised
–

Project Title
NORTHPORT
FMS #9 RENOVATIONS
NORTHPORT, AL

Sheet Title
NEW METAL BUILDING #1
BUILDING #2, WASH RACK
POWER

Sheet Number
E3.3

ALABAMA REGISTERED NO. 26988 PROFESSIONAL ENGINEER KENNETH RAY GUNN, JR. 01-07-22

Gunn & Associates, P.C.
Consulting Engineers
3102 Highway 14
Millbrook, AL 36054
Tel: 334.285.1273
1200 Providence Park, Suite 200
Birmingham, AL 35242
GA#18-109

EXISTING BUILDING GENERAL EQUIPMENT SCHEDULE

EQUIPMENT MARK:	EQUIPMENT DESCRIPTION:	VOLTAGE/PHASE:	ELECTRICAL CHARACTERISTICS:			DISCONNECT:	FUSE:	HOMERUN:	FEEDER:
			HP	KW	AMPS				
CEH-1	CEILING ELECTRIC HEATER	208V., 1PH.		2.0		30/2/1	F	LPC# 1,3	2#12 & 1#12(G) 3/4"C
VEF-1	VEHICLE EXHAUST FAN	208V., 3PH.	7.5			60/3/3R	F	LPC# 5,7,9	3#4 & 1#10(G) 1"C.
VEF-2	VEHICLE EXHAUST FAN	208V., 3PH.	7.5			60/3/3R	F	LPC# 11,13,15	3#4 & 1#10(G) 1"C.
GIR-1	GAS INFRARED HEATER	120V., 1PH.			3.0	TS		LPC# 2	2#12 & 1#12(G) 3/4"C
GIR-2	GAS INFRARED HEATER	120V., 1PH.			3.0	TS		LPC# 4	2#12 & 1#12(G) 3/4"C
GIR-3	GAS INFRARED HEATER	120V., 1PH.			3.0	TS		LPC# 6	2#12 & 1#12(G) 3/4"C
GIR-4	GAS INFRARED HEATER	120V., 1PH.			3.0	TS		LPC# 8	2#12 & 1#12(G) 3/4"C
GIR-5	GAS INFRARED HEATER	120V., 1PH.			3.0	TS		LPC# 10	2#12 & 1#12(G) 3/4"C
GIR-6	GAS INFRARED HEATER	120V., 1PH.			3.0	TS		LPC# 12	2#12 & 1#12(G) 3/4"C
GIR-7	GAS INFRARED HEATER	120V., 1PH.			3.0	TS		LPC# 14	2#12 & 1#12(G) 3/4"C
GIR-8	GAS INFRARED HEATER	120V., 1PH.			3.0	TS		LPC# 16	2#12 & 1#12(G) 3/4"C
GIR-9	GAS INFRARED HEATER	120V., 1PH.			3.0	TS		LPC# 18	2#12 & 1#12(G) 3/4"C
DF-1	DESTRATIFICATION FAN	208V., 3PH.			10.0	30/3/1	F	LPC# 17,19,21	3#10 & 1#10(G) 3/4"C.
DF-2	DESTRATIFICATION FAN	208V., 3PH.			10.0	30/3/1	F	LPC# 23,25,27	3#10 & 1#10(G) 3/4"C.
DF-3	DESTRATIFICATION FAN	208V., 3PH.			10.0	30/3/1	F	LPC# 29,31,33	3#10 & 1#10(G) 3/4"C.
DF-4	DESTRATIFICATION FAN	208V., 3PH.			10.0	30/3/1	F	LPC# 35,37,39	3#10 & 1#10(G) 3/4"C.
DF-5	DESTRATIFICATION FAN	208V., 3PH.			10.0	30/3/1	F	LPC# 20,22,24	3#10 & 1#10(G) 3/4"C.
DF-6	DESTRATIFICATION FAN	208V., 3PH.			10.0	30/3/1	F	LPC# 26,28,30	3#10 & 1#10(G) 3/4"C.
EF-4	EXHAUST FAN	120V., 1PH.	1/25			TS/WP	NOTE 7	LPC# 32	2#12 & 1#12(G) 3/4"C
EF-8	EXHAUST FAN	120V., 1PH.	1/6			TS/WP	NOTE 7	LPC# 34	2#12 & 1#12(G) 3/4"C
GWH-1	GAS WATER HEATER	120V., 1PH.			5.0	TS/WP		LPC# 36	2#12 & 1#12(G) 3/4"C
CP-1	CIRCULATOR PUMP	120V., 1PH.	1/40			TS/WP		LPC# 38	2#12 & 1#12(G) 3/4"C
SP-1	SUMP PUMP	120V., 1PH.	1/3			TS		LPC# 40	2#12 & 1#12(G) 3/4"C

NOTES:
1. COORDINATE WITH MANUFACTURER'S CUTSHEETS OR NAMEPLATE DATA AND ADJUST OVERCURRENT PROTECTION AS NEEDED TO PROTECT EQUIPMENT PER MANUFACTURER'S RECOMMENDATIONS AND TO COMPLY WITH NEC AND ALL LOCAL CODES. COORDINATION SHALL BE DONE PRIOR TO BIDS AND ACCOUNTED FOR IN THE CONTRACTOR'S BID PRICE.
2. ALL DISCONNECTS SHALL BE HEAVY DUTY TYPE.
3. ALL FUSES SHALL BE SIZED PER NAMEPLATE DATA.
4. "NF" - NON-FUSED
5. "F" - FUSED
6. "TS" MANUAL MOTOR STARTER WITH THERMAL OVERLOAD ("W" - WEATHERPROOF) ("30-AMP" - 30-AMP RATED)
7. PROVIDE INTERCONNECTING RELAY SUCH THAT FAN IS CONTROLLED BY LIGHTING.
8. "WP" - WEATHERPROOF ENCLOSURE.
9. CONTRACTOR SHALL COORDINATE EXACT REQUIREMENTS AND LOCATIONS FOR ALL CIRCULATING PUMPS AND TIME CLOCKS WITH MECHANICAL CONTRACTOR PRIOR TO ROUGH-IN.

NEW METAL BUILDING #1 EQUIPMENT SCHEDULE

EQUIPMENT MARK:	EQUIPMENT DESCRIPTION:	VOLTAGE/PHASE:	ELECTRICAL CHARACTERISTICS:			DISCONNECT:	FUSE:	HOMERUN:	FEEDER:
			HP	KW	AMPS				
EUH-1	ELECTRIC UNIT HEATER	208V., 1PH.	1/30	7.5	----	60/2/1	F	RPA# 9,11	2#8 & 1#1(G) 1"C.
EUH-2	ELECTRIC UNIT HEATER	208V., 1PH.	1/30	7.5	----	60/2/1	F	RPA# 13,15	2#8 & 1#1(G) 1"C.
EF-1	EXHAUST FAN	208V., 1PH.	1.0	----	----	30/2/3R	F	RPA# 17	2#12 & 1#12(G) 3/4"C.
MD-1	MOTORIZED DAMPER	120V., 1PH.	----	0.600	----	TS		RPA# 19	2#12 & 1#12(G) 3/4"C
MD-1	MOTORIZED DAMPER	120V., 1PH.	----	0.600	----	TS		RPA# 19	2#12 & 1#12(G) 3/4"C

NOTES:
1. COORDINATE WITH MANUFACTURER'S CUTSHEETS OR NAMEPLATE DATA AND ADJUST OVERCURRENT PROTECTION AS NEEDED TO PROTECT EQUIPMENT PER MANUFACTURER'S RECOMMENDATIONS AND TO COMPLY WITH NEC AND ALL LOCAL CODES. COORDINATION SHALL BE DONE PRIOR TO BIDS AND ACCOUNTED FOR IN THE CONTRACTOR'S BID PRICE.
2. ALL DISCONNECTS SHALL BE HEAVY DUTY TYPE.
3. ALL FUSES SHALL BE SIZED PER NAMEPLATE DATA.
4. "NF" - NON-FUSED
5. "F" - FUSED
6. "TS" MANUAL MOTOR STARTER WITH THERMAL OVERLOAD ("W" - WEATHERPROOF) ("30-AMP" - 30-AMP RATED)
7. PROVIDE INTERCONNECTING RELAY SUCH THAT FAN IS CONTROLLED BY LIGHTING.
8. "WP" - WEATHERPROOF ENCLOSURE.
9. CONTRACTOR SHALL COORDINATE EXACT REQUIREMENTS AND LOCATIONS FOR ALL CIRCULATING PUMPS AND TIME CLOCKS WITH MECHANICAL CONTRACTOR PRIOR TO ROUGH-IN.

GENERAL NOTES:

1. COORDINATE WITH MECHANICAL/PLUMBING DRAWINGS FOR EXACT LOCATIONS OF EQUIPMENT.
2. MOUNT EXTERIOR DISCONNECTS ON EXTERIOR WALLS AT LEAST 18" FROM WINDOWS. LOCATIONS OF DISCONNECTS AND EQUIPMENT ARE SHOWN FOR DRAWING CLARITY PURPOSES ONLY.
3. COORDINATE WITH MECHANICAL/PLUMBING CONTRACTORS TO INSURE OVERCURRENT PROTECTION DEVICES FOR THEIR EQUIPMENT IS SIZED PER MANUFACTURER'S RECOMMENDATIONS. ENGINEER SIZED OVERCURRENT PROTECTION ACCORDING TO MECHANICAL/PLUMBING DRAWINGS AND SPECIFICATIONS, ACTUAL EQUIPMENT SUPPLIED MAY DIFFER. ELECTRICAL CONTRACTOR SHALL WORK WITH OTHER TRADE DISCIPLINES TO INSURE ANY CHANGES WILL BE INSTALLED CORRECTLY AT THE COST OF THE PERSON MAKING THE CHANGES.
4. ALL FLEXIBLE CONNECT TO HVAC UNITS SHALL BE RUN PARALLEL TO HARD SURFACE AND STRAPPED AT LEAST EVERY 2'.
5. CONTRACTOR SHALL PROVIDE CONDUIT FOR MECHANICAL CONTROLS. COORDINATE EXACT LOCATIONS WITH MECHANICAL CONTRACTOR PRIOR TO ROUGH-IN.
6. ALL DISCONNECTS TO HAVE NAMEPLATE AS SHOWN IN DETAIL (2) THIS SHEET, NO EXCEPTIONS.
7. PROVIDE DEDICATED NEUTRALS FOR EACH MULTIWIRE HOMERUN PER NEC.
8. COORDINATE WITH GENERAL EQUIPMENT SCHEDULES ON THIS SHEET FOR CIRCUITRY OF ALL EQUIPMENT TAGGED ON THIS SHEET.
9. SEE DETAIL 1 THIS SHEET FOR MECHANICAL UNIT CONNECTION DETAIL.

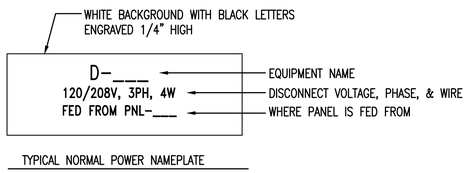

1 / E3.4 DETAIL - TYPICAL DISCONNECT NAMEPLATE
NO SCALE

NOTE:
1. FOR DISTANCE GREATER THAN 48" CONDUIT TO BE ROUTED BELOW GRADE WITH 6" OF MECH. UNIT, STUB-UP W/ RIGID ELBOW THRU CONCRETE PAD. PROVIDE FLEXIBLE CONNECTION FROM ELBOW TO MECH. UNIT, W/ CONNECTION MADE AT UNIT AS SHOWN ABOVE.

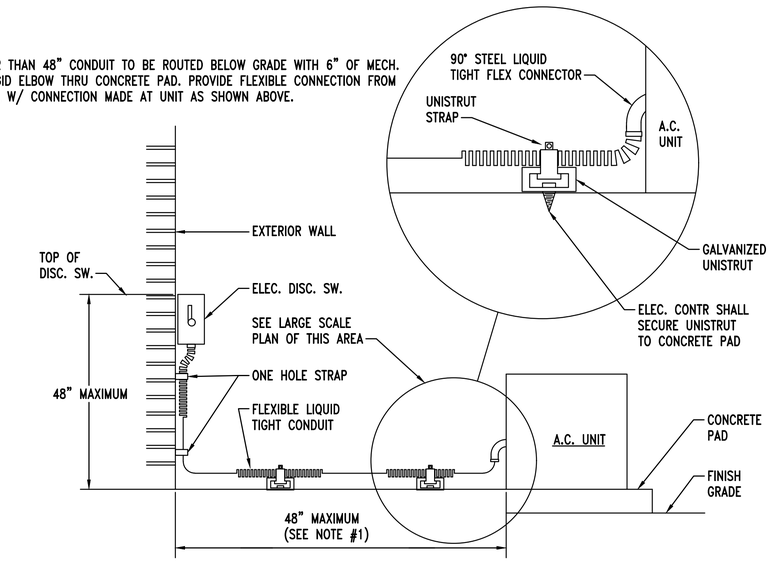

2 / E3.4 MECHANICAL UNIT CONNECTION DETIAL
NO SCALE

SEAY SEAY & LITCHFIELD
1115 South Court Street
Montgomery, AL 36104
(334) 263-5162

Owner:
The Armory Commission of Alabama
1720 Cong WL Dickinson Drive
Montgomery, AL 36109

SS&L Job Number
14057

IFB Job Number
AC-22-B-0004-S

Date
JANUARY 2022

Drawn By
SBW

Checked By
KRG

Revised
-

Project Title
NORTHPORT
FMS #9 RENOVATIONS
NORTHPORT, AL

Sheet Title
EQUIPMENT SCHEDULES

Sheet Number
E3.4

ALABAMA REGISTERED NO. 26988 PROFESSIONAL ENGINEER KENNETH RAY GUNN, JR. 01-07-22

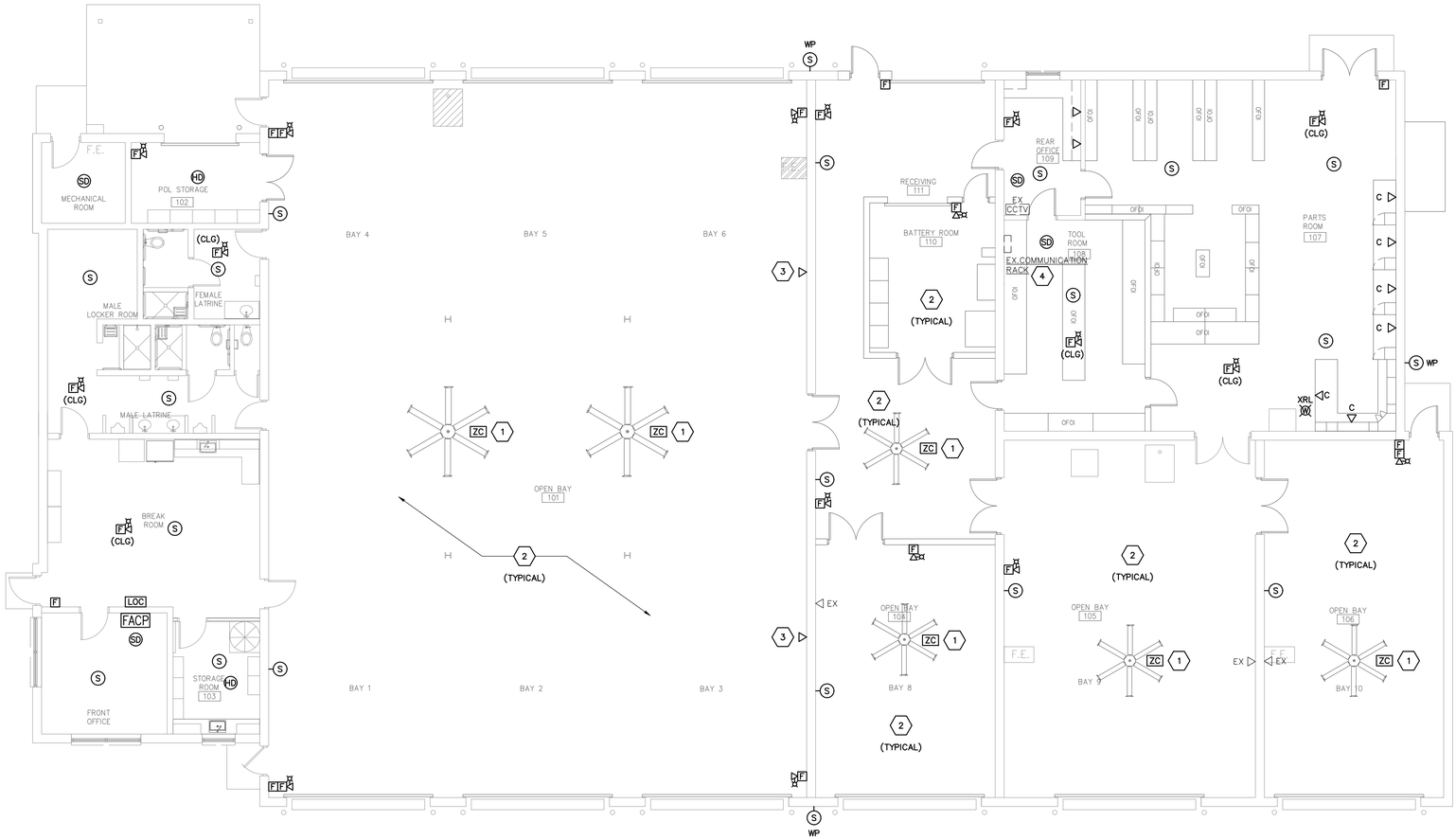

SHEET NOTES:

1. UPON FIRE ALARM, SHUT DOWN FAN.
2. PROVIDE WIREGUARD ON ALL FIRE ALARM DEVICES IN THIS ROOM.
3. VERIFY EXACT LOCATION WITH OWNER PRIOR TO ROUGH IN.
4. PROVIDE 24–PORT CAT 6 PATCH PANEL IN EXISTING WALL RACK TO TERMINATE NEW COMM CABLING.

1 / E4.1 MAINTENANCE BUILDING FLOOR PLAN – AUXILIARY

SCALE: 1/8"=1'–0"

GRAPHIC SCALE

0 4 8 16 24

1/8" = 1'–0"

Gunn & Associates, P.C.
Consulting Engineers
3102 Highway 14
Millbrook, AL 36054
Tel: 334.285.1273
1200 Providence Park, Suite 200
Birmingham, AL 35242
GA#18-109

SEAY SEAY & LITCHFIELD
1115 South Court Street
Montgomery, AL 36104
(334) 263–5162

Owner:
The Armory Commission of Alabama
1720 Cong WL Dickinson Drive
Montgomery, AL 36109

SS&L Job Number
14057

IFB Job Number
AC–22–B–0004–S

Date
JANUARY 2022

Drawn By
SBW

Checked By
KRG

Revised
–

Project Title
NORTHPORT
FMS #9 RENOVATIONS
NORTHPORT, AL

Sheet Title
MAINTENANCE BUILDING
FLOOR PLAN – AUXILIARY

Sheet Number
E4.1

ALABAMA REGISTERED PROFESSIONAL ENGINEER NO. 26988 KENNETH RAY GUNN, JR. 01–07–22

SHEET NOTES:

1. CONTRACTOR WILL BE ALLOWED TO USE J-HOOKS INSTEAD OF CONDUIT FROM THE WHERE THE CONDUIT STUBS UP ABOVE THE ACCESSIBLE CEILING TO THE COMMUNICATIONS RACK, J-HOOKS WILL HAVE TO BE PROVIDED ALTERNATING EVERY 3' AND 4' IF THIS OPTION IS USED. PROVIDE J-HOOK'S CLOSER IF NEEDED. CONDUIT MUST BE USED WHERE THERE IS NO CEILING TO CONCEAL THE J-HOOKS.

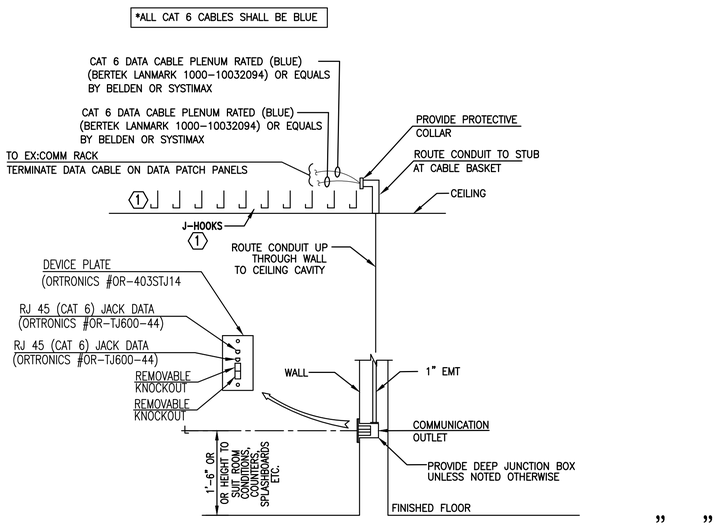

1 E4.2 DETAIL - TYPICAL COMMUNICATION OUTLET

NO SCALE

PAGING LEGEND

Ⓢ	SPEAKER, BACK CAN, SUPPORTS, BAFFLED CONNECTED TO AMPLIFIER ZONE.
ⓈH	WALL MOUNTED SPEAKER AND SUPPORTS. (WEATHERPROOF WHEN INDICATED 'WP')
—S—	CONDUIT AND PLENUM CABLE AS REQUIRED.

PAGING SYSTEM NOTES

1. PAGING SYSTEM SHALL BE INSTALLED TO INCLUDE 1 ZONE OF PAGING.
2. THE PAGING SYSTEM SHALL BE SEPARATE FROM THE FIRE ALARM SYSTEM.
3. PROVIDE COMPLETE WITH AMPLIFIER.
4. REUSE EXISTING SPEAKERS IN CORRIDORS, EXTERIOR, AND DRILL HALL AND PROVIDE NEW CABLING TO EACH. REPLACE ALL EXISTING SPEAKERS IF THEY ARE NOT COMPATIBLE WITH NEW SYSTEM.

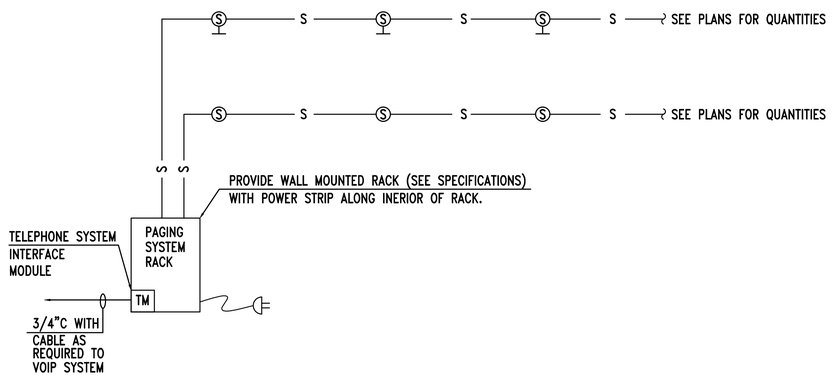

2 E4.2 RISER DIAGAM - PAGING SYSTEM

NO SCALE

Gunn & Associates, P.C.
Consulting Engineers
3102 Highway 14
Millbrook, AL 36054
Tel: 334.285.1273
1200 Providence Park, Suite 200
Birmingham, AL 35242
GA#18-109

SEAY SEAY & LITCHFIELD
1115 South Court Street
Montgomery, AL 36104
(334) 263-5162

Owner:
The Armory Commission of Alabama
1720 Cong WL Dickinson Drive
Montgomery, AL 36109

SS&L Job Number
14057

IFB Job Number
AC-22-B-0004-S

Date
JANUARY 2022

Drawn By
SBW

Checked By
KRG

Revised
-

Project Title
NORTHPORT
FMS #9 RENOVATIONS
NORTHPORT, AL

Sheet Title
COMMUNICATION SYSTEM DETAILS

Sheet Number
E4.2

ALABAMA REGISTERED
NO. 26988
PROFESSIONAL
ENGINEER
KENNETH RAY GUNN, JR.
01-07-22

FIRE ALARM/ MASS NOTIFICATION SYSTEM NOTES:

1. THE FIRE ALARM AND MASS NOTIFICATION SHALL BE COMBINED IN ONE MASTER CONTROL PANEL. THE MASTER CONTROL PANEL SHALL HAVE FEATURES OF A FIRE ALARM AND MASS NOTIFICATION CONTROL UNIT WHERE FIRE AND MASS NOTIFICATION CONTROL UNITS ARE INTERCONNECTED. THE PANEL HAS CENTRAL PROCESSING, MEMORY, AND INPUT/OUTPUT TERMINALS.
2. INSTALLATION SHALL COMPLY WITH THE ADA, NEC, NFPA, UL, AND UFC 4-021-01.
3. ALL SYSTEM COMPONENTS, ENCLOSURES, FRAMES, SURGE ARRESTORS, ETC., SHALL BE GROUNDED.
4. THE FACP/MNS WIRING SYSTEM SHALL BE FURNISHED AND INSTALLED IN ACCORDANCE WITH THE MANUFACTURER'S REQUIREMENTS FOR CLASS "A" SYSTEM AND AS FOLLOWS:
   PRIMARY POWER - 120V AC
   NOTIFICATION APPLIANCE CIRCUITS (NAC) - 24V DC
   SIGNALING LINE CIRCUIT (SLC) - 24V DC
5. ALL CLASS 'A' CIRCUITS SHALL BE INSTALLED SUCH THAT THE OUTGOING AND RETURN CONDUCTORS, EXITING FROM AND RETURNING TO THE CONTROL UNIT RESPECTIVELY, ARE ROUTED SEPARATELY AND NOT RUN IN THE SAME CABLE OR RACEWAY.
6. ALL EQUIPMENT AND DEVICES SHALL BE INSTALLED IN ACCORDANCE WITH THE MANUFACTURER'S INSTRUCTIONS, APPLICABLE STANDARDS AND ACCESSIBLE FOR VISUAL INSPECTION AND MAINTENANCE. WIRING DIAGRAMS SHALL BE SECURED FROM THE SYSTEM MANUFACTURER AND INSTALLED ACCORDINGLY TO MEET THE SPECIFIED TYPES.
7. A "CERTIFICATE OF COMPLETION" IN ACCORDANCE WITH NFPA 72 SHALL BE FURNISHED PRIOR TO FINAL ACCEPTANCE.
8. CONTRACTOR IS RESPONSIBLE FOR VERIFYING AND PROVIDING ALL FACP/MNS DEVICE QUANTITIES FROM AUXILIARY DRAWINGS. DO NOT USE THIS RISER FOR DEVICE COUNTS.
9. PROVIDE ADDITIONAL NOTIFICATION APPLIANCE CIRCUIT PANELS, POWER SUPPLIES, ETC. FOR FUTURE CAPACITY TO HAVE SYSTEM WORK CORRECTLY AS ONE SYSTEM.
10. PROVIDE MONACO TRANSCEIVER AND ANTENNA. PROVIDE ALL ASSOCIATED MOUNTING BRACKETS, COAX. ETC.
11. PROVIDE EMERGENCY BATTERIES CAPABLE OF RUNNING THE COMPLETE FACP/MNS SYSTEM IN ALARM MODE, PER NFPA GUIDELINES AT A MINUMUM. BATTERIES SHALL BE SIZED TO HANDLE THE FUTURE CAPACITY.
12. FACP/MNS SYSTEM SHALL REPORT TO THE LOCAL FIRE DEPARTMENT. CONTRACTOR IS RESPONSIBLE FOR COORDINATING WITH FIRE DEPARTMENT AND PROVIDING NOTIFICATION ACCORDING TO THE LOCAL FIRE DEPARTMENT SPECIFICATIONS.
13. ALL WIRING TO BE IN CONDUIT SIZED IN ACCORDANCE WITH NEC WITH A MINIMUM SIZE OF 3/4". PROVIDE ALL CONDUIT WITH 3" WIDE RED STRIPE EVERY 10' FOR LENGTH OF RUN.
14. PROVIDE ALL JUNCTION BOXES WITH RED COVER, STENCIL THE LETTERS "FA" IN 2" HIGH LETTERS ON EACH BOX COVER.
15. FACP/MNS SYSTEM PROVIDER IS RESPONSIBLE FOR PROVIDING SIGNAL LINE BOOSTERS AS REQUIRED FOR SYSTEM TO FUNCTION PROPERLY.

SHEET NOTES

1. PROVIDE TVSS PROTECTION ON POWER FEED TO FIRE ALARM CONTROL PANEL.
2. PROVIDE TWO CAT 6 CABLES TO TBB FOR MONITORING.

FIRE ALARM & MASS NOTIFICATION RECORDED MESSAGES
1. (TONE USED FOR FIRE), "MAY I HAVE YOUR ATTENTION PLEASE?! A EMERGENCY HAS BEEN REPORTED IN THE BUILDING. WHILE THIS IS BEING VERIFIED, PLEASE LEAVE THE BUILDING BY THE NEAREST EXIT."
2. (CHIME) "TORNADO IN THE AREA. SEEK COVER IMMEDIATELY"
3. (CHIME) "THERE IS AN INTRUDER ON POST. STAY INSIDE AND SECURE ALL DOORS."
4. (CHIME) "BOMB THREAT ISSUED FOR THIS FACILITY. REMAIN CALM. EXIT THE BUILDING. AVOID THE MAIN ENTRANCE."
5. (CHIME) "THERE IS AN ACTIVE SHOOTER ON POST. STAY INSIDE. CLOSE DOORS AND WINDOWS."
6. (CHIME) "POSSIBLE CONTAMINATION IN THE VICINITY. STAY INSIDE. CLOSE DOORS AND WINDOWS."
7. (CHIME) "ALL CLEAR. RESUME NORMAL ACTIVITIES."
8. (CHIME) "THIS IS A TEST OF THE NOTIFICATION SYSTEM. CONTINUE NORMAL ACTIVITIES. THIS IS ONLY A TEST."
MESSAGE NOTES:
1. CONTRACTOR SHALL FURNISH AND HAVE INSTALLED A MESSAGE KIT FOR FIRE ALARM & MNS WITH MESSAGES SHOWN IN TABLE ABOVE.
2. MESSAGES #1-#6 SHALL BE IN MALE VOICE AND #7 & #8 SHALL BE FEMALE VOICE.
3. MESSAGE #1 SHALL HAVE FIRE ALARM PRE TONE AND AFTER TONE. MESSAGES #2-#8 SHALL HAVE CHIMES FOR PRE TONE AND AFTER TONES.

FIRE ALARM MOUNTING HEIGHTS/INSTRUSTIONS NOTES

1. MOUNT FIRE ALARM ENCLOSURE WITH THE TOP OF THE CABINET 72" ABOVE THE FINISHED FLOOR OR CENTER THE CABINET AT 63", WHICHEVER IS LOWER.
2. MOUNT LOC WITH THE TOP OF THE PANEL 72" ABOVE THE FINISHED FLOOR OR CENTER OF THE PANEL AT 63", WHICHEVER IS LOWER. FLUSH MOUNT ANNUNCIATOR UNLESS OTHERWISE NOTED.
3. REMOTE POWER SUPPLIES AND AUXILIARY FIRE ALARM PANELS. LOCATE THE PANEL OR CABINET WITH THE TOP OF THE PANEL 72" ABOVE THE FINISHED FLOOR OR CENTER THE PANEL AT 63", WHICHEVER IS LOWER. DO NOT LOCATE THESE PANELS ABOVE CEILINGS OR WHERE INACCESSIBLE BY A PERSON STANDING ON THE FINISHED FLOOR OF THE SPACE.
4. MOUNT STATIONS SO THAT THEIR OPERATING HANDLES ARE BETWEEN 42" AND 48" ABOVE THE FINISHED FLOOR. DO NOT USE BRICK OR BLOCK COURSES AS YOUR ONLY GUIDE. CUT BRICK OR BLOCK TO ACHIEVE PROPER HANDLE HEIGHT.
5. ALL WALL MOUNTED AUDIO/VISUAL DEVICES SHALL BE MOUNTED SO THE ENTIRE LENS IS BETWEEN 80" AND 96" ABOVE THE FINISHED FLOOR. WHERE LOW CEILING HEIGHTS DO NOT PERMIT MOUNTING AT A MINIMUM OF 80" AFF, VISIBLE APPLIANCES SHALL BE MOUNTED WITHIN 6" OF THE CEILING. DO NOT USE BRICK OR BLOCK COURSES AS YOUR ONLY GUIDE. CUT BRICK OR BLOCK TO ACHIEVE PROPER LENS HEIGHT.
6. WEATHER PROOF APPLIANCES INSTALLED OUTDOORS SHALL BE UL LISTED FOR OUTDOOR USE. MOUNT SO THE ENTIRE LENS IS BETWEEN 80" AND 96" ABOVE FINISHED FLOOR. FOR WEATHERPROOF APPLIANCES MOUNTED AT FIRE DEPARTMENT CONNECTION (FDC), COORDINATE WITH LOCAL AUTHORITY HAVING JURISDICTION PRIOR TO ROUGH-IN FOR MOUNTING HEIGHT.
7. SMOKE AND HEAT DETECTOR HEADS SHALL NOT BE INSTALLED UNTIL AFTER CONSTRUCTION CLEAN-UP IS COMPLETED. IF DETECTOR HEADS ARE INSTALLED PRIOR TO CONSTRUCTION CLEAN-UP, PROTECTIVE COVERS MUST BE IN PLACE TO PROTECT DETECTOR HEADS FROM PARTICULATE DAMAGE. DETECTORS LOCATED ON THE WALL SHALL HAVE THE TOP OF THE DETECTOR AT LEAST 4" AND NOT MORE THAN 12" BELOW THE CEILING. INSTALL SMOKE DETECTORS NO CLOSER THAN 3 FEET FROM AIR HANDLING SUPPLY AIR DIFFUSERS OR RETURN AIR OPENINGS. LOCATE DETECTORS NO CLOSER THAN 12" FROM ANY PART OF A LIGHTING FIXTURE.
8. DUCT SMOKE DETECTOR HEADS SHALL NOT BE INSTALLED UNTIL AFTER CONSTRUCTION CLEAN-UP IS COMPLETED. DETECTOR HEADS INSTALLED PRIOR TO CONSTRUCTION CLEAN-UP SHALL BE REPLACED. DUCT DETECTORS ARE TO BE PROVIDED BY THE FIRE ALARM CONTRACTOR AND INSTALLED BY THE MECHANICAL CONTRACTOR.
9. ADDRESSABLE MODULES SHALL BE INSTALLED LESS THAN 3-FEET FROM THE DEVICE BEING CONTROLLED OR MONITORED. ORIENT THE DEVICE MOUNTING FOR BEST MAINTENANCE ACCESS. LABEL ALL ADDRESSABLE MODULES AS TO THEIR FUNCTION.

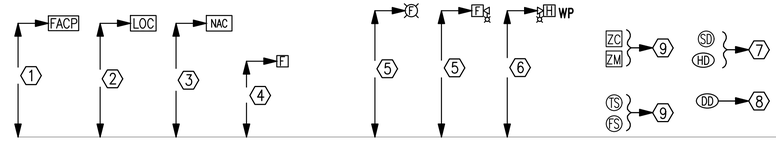

2 / E4.3 STANDARD MOUNTING HEIGHTS/INSTRUCTIONS
NOT TO SCALE

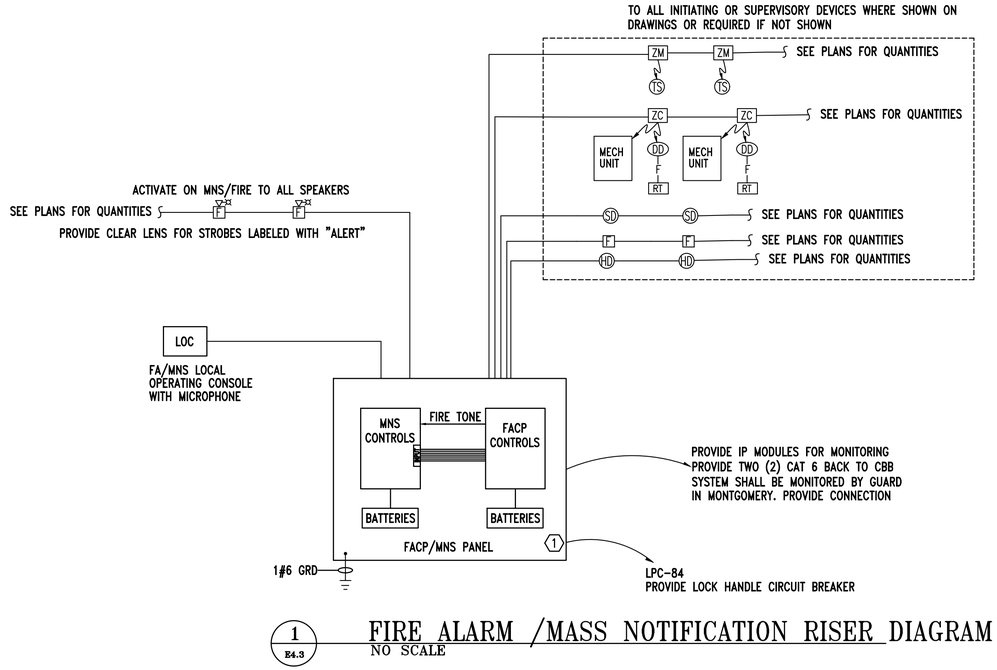

1 / E4.3 FIRE ALARM /MASS NOTIFICATION RISER DIAGRAM
NO SCALE

Gunn & Associates, P.C.
Consulting Engineers
3102 Highway 14
Millbrook, AL 36054
Tel: 334.285.1273
1200 Providence Park, Suite 200
Birmingham, AL 35242
GA#18-109

SEAY SEAY & LITCHFIELD

1115 South Court Street
Montgomery, AL 36104
(334) 263-5162

Owner:
The Armory Commission of Alabama
1720 Cong WL Dickinson Drive
Montgomery, AL 36109

SS&L Job Number
14057

IFB Job Number
AC-22-B-0004-S

Date
JANUARY 2022

Drawn By
SBW

Checked By
KRG

Revised
-

Project Title
NORTHPORT
FMS #9 RENOVATIONS
NORTHPORT, AL

Sheet Title
FIRE ALARM / MNS
SINGLE LINE DIAGRAM
DETAILS AND NOTES

Sheet Number
E4.3

ALABAMA REGISTERED
KENNETH RAY GUNN JR
NO. 26988
PROFESSIONAL
ENGINEER
01-07-22

LIGHTING FIXTURE SCHEDULE

TYPE:	MANUFACTURER NUMBER AND EQUALS:	VOLTAGE:	MOUNTING:	LAMP TYPE:	LAMP QUANTITY:	DESCRIPTION:
LG48	HUBBELL NO. LCAT-24-4000K-ML-G-ED-MVOLT OR PRIOR APPROVED EQUALS BY LITHONIA OR COOPER	MVOLT	RECESSED	LED	1 5000 LUMEN 39 WATTS	2'X4' 5000-LUMEN VOLUMETRIC FIXTURE. 0-10V DIMMING CAPABLE WHERE INDICATED.
LG72	HUBBELL NO. LCAT-24-4000K-VL-G-ED-MVOLT OR PRIOR APPROVED EQUALS BY LITHONIA OR COOPER	MVOLT	RECESSED	LED	1 7200 LUMEN 60 WATTS	2'X4' 7200-LUMEN VOLUMETRIC FIXTURE. 0-10V DIMMING CAPABLE WHERE INDICATED.
LS1	HUBBELL NO. LCL-4-4000K-ML-E-MVOLT OR PRIOR APPROVED EQUALS BY LITHONIA OR COOPER	MVOLT	SURFACE	LED	5000 LUMEN 42 WATTS	SURFACE MOUNTED 4'-0" LED STRIP.
LV1	HUBBELL NO. LXEM-4-4000K-ML-RFA-E-UNIV OR PRIOR APPROVED EQUALS BY LITHONIA OR COOPER	MVOLT	WALL	LED	1 5000 LUMEN 42 WATTS	FIBERGLASS SURFACE MOUNTED 4'-0" LED VAPORTIGHT.
LV2	HUBBELL NO. LXEM-4-40-XL-DCA-E-UNV OR PRIOR APPROVED EQUALS BY LITHONIA OR COOPER	MVOLT	WALL	LED	1 11000 LUMEN 92 WATTS	FIBERGLASS SURFACE MOUNTED 4'-0" LED VAPORTIGHT.
WP1	LITHONIA NO. TWH-LED-20C-1000-T3M-MVOLT-DDBXD-ELSW OR PRIOR APPROVED EQUALS BY HUBBELL OR COOPER	MVOLT	WALL	LED	1 7000 LUMEN 80 WATTS	DARK BRONZE EXTERIOR LED LIGHT. TWO LIGHT ENGINES. LIGHT ENGINES SHALL BE SWITCHED ANI CONTROLLED SEPARATE FROM LIGHTING CONTROL PANEL. UL LISTED FOR WET LOCATIONS.
EM	LITHONIA NO. ELM4L-UVOLT-SDRT OR PRIOR APPROVED EQUALS BY LITHONIA OR COOPER	MVOLT	WALL	LED	1 10 WATTS	LED EMERGENCY WALL PACK
EXIT SIGN COMBO "XB"	LITHONIA NO. LHQM-S-W-3-R-HO-LP06VS OR PRIOR APPROVED EQUALS BY LITHONIA OR COOPER	MVOLT	UNIVERSAL	LED	1 3 WATTS	THERMOPLASTIC 1000-LUMEN COMBO LED EXIT SIGN EGRESS LIGHT. PROVIDE WITH NUMBER OF FACES AND DIRECTIONAL ARROWS AS SHOWN ON DRAWINGS. COORDINATE COLOR OF SIGNAGE WITH LOCAL REQUIREMENTS. PROVIDE WITH EMERGENCY BATTERY.

NOTES:
1. ARCHITECT RESERVES THE RIGHT TO SELECT ALL COLORS OR MAKE CUSTOM COLOR DURING SHOP DRAWING REVIEW. BID ACCORDINGLY.
2. COORDINATE MOUNTING OF ALL LUMINAIRES WITH ARCHITECTURAL ELEVATIONS PRIOR TO INSTALLATION
3. PROVIDE EMERGENCY BATTERY BALLAST FOR ALL EMERGENCY TYPE FIXTURES CAPABLE OF 90-MINUTES.
4. ALL LIGHTS SHALL HAVE 4000K TEMPERTURE LAMPS, UNLESS NOTED OTHERWISE.

LUMINAIRE NOTES:

1. ALL LUMINAIRES AND INSTALLATION SHALL BE IN ACCORDANCE WITH NEC, NFPA AND LOCAL CODES. ALL LUMINAIRES SHALL BE UL LISTED AND INSTALLED IN ACCORDANCE WITH THE UL LISTING.
2. LUMINAIRES SHALL BE FURNISHED COMPLETE WITH THE PROPER LAMP BASE OR PIN RECEPTORS, WIRING COMPONENTS, LAMPS, SUPPORTING FRAMES AND DEVICES, ETC., FOR A COMPLETE INSTALLATION.
3. ALL LUMINAIRE DEVICES, COMPONENTS, FITTINGS, SUPPORTS, ETC., SHALL BE COORDINATED TO PROVIDE A COMPLETE UL LISTED INSTALLATION.
4. ALL LUMINAIRES BALLAST, DRIVERS, LAMPS, ETC SHALL BE COMPATIABLE WITH THE LIGHTING CONTROL SYSTEM OR DIMMING CONTROL SYSTEM PROVIDED.
6. SECURE EACH LAY-IN LUMINAIRE AT TWO LOCATIONS TO THE CEILING GRID. PROVIDE BOLTS, SCREWS, RIVETS OR APPROVED CLIPS FOR USE WITH THE TYPE CEILING AND LUMINAIRE INSTALLED.
7. ALL LUMINAIRES IN MECHANICAL AND ELECTRICAL ROOMS SHALL BE INSTALLED TO CLEAR ELECTRICAL EQUIPMENT, DUCT, PIPING, ETC., SUSPEND BELOW OBSTRUCTION WHEN CONFLICTS OCCUR.
8. ALL FLUORESCENT LUMINARIES SHALL BE PROVIDED WITH 3500K COLOR TEMPERATURE LAMPS, UNLESS NOTED OTHERWISE.
9. PROVIDE ALL DUAL SWITCHED LUMINAIRES WITH DUAL BALLAST.
10. LUMINAIRES WITH TWO SUB-SCRIPTS AN "a" AND "b" SHALL HAVE OUTSIDE TWO LAMPS CONTROLLED BY SWITCH OR RELAY POLE "a" AND INSIDE LAMP OR LAMPS CONTROLLED BY SWITCH OR RELAY POLE "b". SIMILARLY FOR OTHER SETS OF SUB-SCRIPTS SUCH AS "c, d, e, f, ETC."
11. ARCHITECT RESERVES THE RIGHT TO SELECT ALL COLORS FOR LUMINAIRES, POLES, MOUNTING ACCESSORIES, ETC. DURING SHOP DRAWING REVIEW.
12. COORDINATE LUMINAIRE MOUNTING WITH ARCHITECTURAL ELEVATIONS PRIOR TO INSTALLATION.
13. PROVIDE ALL EXIT SIGNS WITH DIRECTIONAL ARROWS AS SHOWN ON DRAWINGS.
14. CONTRACTOR SHALL PROVIDE ALL SLOPE ADAPTERS, FLANGE KITS, TRIMS, AND ALL OTHER MOUNTING ACCESSORIES AS NEEDED TO MOUNT EACH LUMINAIRE IN CEILINGS AS SHOWN. COORDINATE WITH ARCHITECTURAL REFLECTED CEILING PLANS.
15. ALL EXIT SIGNS AND LUMINAIRES DESIGNATED AS EMERGENCY SHALL BE PROVIDED WITH A MINIMUM 1100 LUMEN EMERGENCY BATTERY BALLAST CAPABLE OF 90 MINUTES OF ILLUMINATION.

NOTES

1. PAINT CONDUIT NIPPLE, SOCKET AND PIPE FLANGE WITH TWO COATS OF ENAMEL.
2. COMPLETE ASSEMBLY TO BE UL LISTED FOR WET LOCATIONS.
3. PHOTOCELL TO BE MOUNTED FACING NORTH FREE FROM ALL SHADOWS WHICH MIGHT CAUSE PHOTOCELL TO TURN LIGHTS ON EARLY. CONTRACTOR SHALL COORDINATE PROPER MOUNTING LOCATION PRIOR TO INSTALLATION.

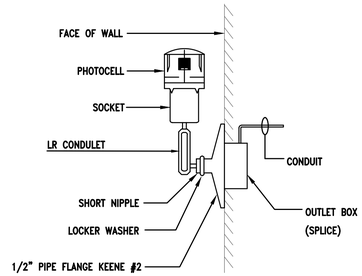

1 / E5.1 DETAIL - INSTALLATION OF PHOTO-CELL
NO SCALE

NOTES:

1. ALL RECESSED LUMINAIRES SHALL BE WIRED FROM A JUNCTION BOX AS SHOWN, INCLUDING LUMINAIRES IN A CONTINUOUS ROW. NO WIRING THRU FIXTURES. NO MORE THAN TWO LUMINAIRES SHALL BE CIRCUITED TO ONE JUNCTION BOX.
2. LUMINAIRE SUPPORT WIRES TO BE A MINUMUM OF #14 GAGE PRE-STRAINED GALVINIZED WIRE ATTACHED AT OPPOSITE CORNERS. LUMINAIRE SHALL BE SUPPORTED TO THE STRUCTURE INDEPENDENT OF THE CEILING GRID.
3. CONDUCTORS IN FLEXIBLE CONDUIT FROM JUNCTION BOX TO LUMINAIRE SHALL CONTAIN AN INSULATED GREEN GROUND WIRE, WITH NEUTRAL AND PHASE CONDUCTORS REQUIRED FOR THE CIRCUITING AND SWITCHING REQUIREMENTS INDICATED.
4. JUNCTION BOXES SHALL BE ACCESSIBLE AND LOCATED WITHIN 1'-6" ABOVE LAY-IN CEILING INSTALLATION. PROVIDE PENDANT ALL-THREAD RODS AND/OR STRUT ASSEMBLIES TO MEET THIS REQUIREMENT WHERE DROP CEILING IS MORE THAN 1'-6" FROM STRUCTURE.
5. CONTRACTOR SHALL INSTALL ALL T-BAR SAFETY CLIPS TO GRID. IF FIXTURE DOES NOT COME WITH GRID SAFETY CLIPS, THEN THE CONTRACTOR SHALL PROVIDE SUPPORT WIRES ON ALL FOUR SIDES.

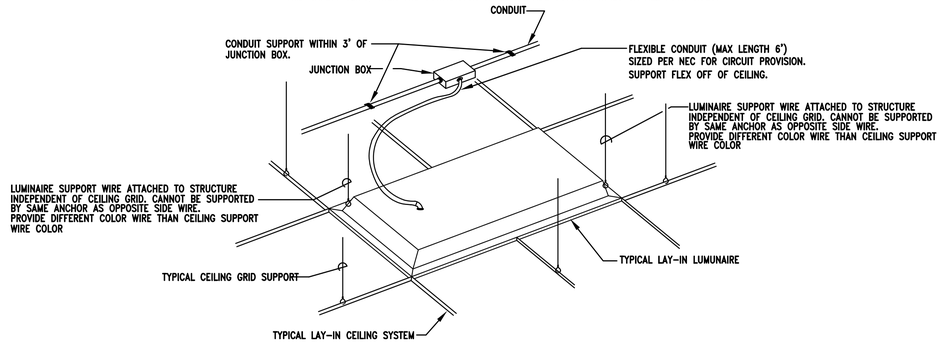

2 / E5.1 DETAIL - TYPICAL LAY-IN LUMINAIRE INSTALLATION
NO SCALE

Gunn & Associates, P.C.
Consulting Engineers
3102 Highway 14
Millbrook, AL 36054
Tel: 334.285.1273
1200 Providence Park, Suite 200
Birmingham, AL 35242
GA#18-109

SEAY SEAY & LITCHFIELD
1115 South Court Street
Montgomery, AL 36104
(334) 263-5162

Owner:
The Armory Commission of Alabama
1720 Cong WL Dickinson Drive
Montgomery, AL 36109

SS&L Job Number
14057

IFB Job Number
AC-22-B-0004-S

Date
JANUARY 2022

Drawn By
SBW

Checked By
KRG

Revised
-

Project Title
NORTHPORT
FMS #9 RENOVATIONS
NORTHPORT, AL

Sheet Title
LUMINAIRE SCHEDULE

Sheet Number
E5.1

ALABAMA REGISTERED
No. 26986
PROFESSIONAL ENGINEER
KENNETH RAY GUNN, JR.
01-07-22

PANELBOARD MPA

TYPE: 1000 AMP MAIN CIRCUIT BREAKER AIC: 42,000 AMPERES MOUNTED: SURFACE VOLTAGE: 120/208 VOLTS, 3 PHASE, 4 WIRE

CIRCUIT DIRECTORY	(VA) PER PHASE			AMP	POLE	CIRCUIT NUMBER		AMP	POLE	(VA) PER PHASE			CIRCUIT DIRECTORY
	PHASE A	PHASE B	PHASE C							PHASE A	PHASE B	PHASE C	
SE	62,000			600		1	2	150		10,126			
		62,000				3	4				10,138		RPA
			62,000		3	5	6		3			8,570	
LPC	32,088			250		7	8	125					SPARE
		31,752				9	10						
			34,068		3	11	12		3				
SPARE				250		13	14	250					BUSSED SPACE
						15	16						
					3	17	18		3				
BUSSED SPACE				250		19	20	250					BUSSED SPACE
						21	22						
					3	23	24		3				
SUB TOTAL (VA)	94,088	93,752	96,068							10,126	10,138	8,570	

TOTAL LOAD PHASE A: 104,214 (VA)
TOTAL LOAD PHASE B: 103,890 (VA)
TOTAL LOAD PHASE C: 104,638 (VA)
TOTAL LOAD: 312,742 (VA) = 869 AMPS

NOTES:
1. PANELBOARD SHALL BE UL LISTED FOR SERVICE ENTRANCE.
2. MAIN BREAKER WILL BE ALLOWED TO BE 80% RATED.
3. PROVIDE PANEL WITH NAME PLATE INDICATING AIC RATING. SEE DETAILS.
4. PROVIDE ARC FAULT LABEL PER DETAIL DETAILS.
5. PROVIDE IN NEMA 3R ENCLOSURE.

PANELBOARD NOTES:

1. PANELBOARDS SHALL BE INSTALLED AND ALL CLEARANCES MAINTAINED IN ACCORDANCE WITH THE NEC.
2. ALL PANELBOARDS SHALL BE UL LISTED AND INSTALLED IN ACCORDANCE WITH THAT LISTING.
3. PANELBOARDS SHALL BE FURNISHED COMPLETE WITH THE PROPERLY SIZED ENCLOSURE, INTERNAL HARDWARE, COMPONENTS, SUPPORTING STRUCTURES, ETC., FOR A COMPLETE INSTALLATION.
4. FURNISH EACH PANELBOARD WITH A GROUND BAR BONDED TO THE PANEL ENCLOSURE.
5. THE TERMINATION POINT OF THE FEEDER SERVING EACH ASSEMBLY SHALL BE AT THE NEAREST POINT OF FEEDER ENTRY INTO THE PANEL, SO AS TO MINIMIZE CONDUCTOR FILL IN THE ENCLOSURE. COORDINATE TOP/BOTTOM FEED PANELBOARD PROVISIONS WITH EACH FEEDER INSTALLATION.
6. PROVIDE THE PROPER SIZE AND QUANTITY OF CONDUCTOR TERMINATION POINTS OR LUGS (MULTIPLE LUGS WHEN PARALLEL FEEDERS ARE USED) ON BUSES AND CIRCUIT BREAKERS FOR THE RESPECTIVE SIZE AND NUMBER OF CONDUCTORS INDICATED.
7. ALL FLUSH-MOUNTED PANELBOARDS SHALL BE PROVIDED WITH AT LEAST SIX (6) 3/4" SPARE CONDUITS STUBBED TO ABOVE THE NEAREST ACCESSIBLE CEILING.
8. PANELBOARDS SHALL BE FULLY RATED. SERIES RATED PANELBOARDS WILL NOT BE ACCEPTED.
9. ALL PANELBOARDS SHALL BE CLEARLY MARKED TO COMPLY WITH NEC ARTICLE 110.16 WITH REGARD TO POTENTIAL HAZARDS OF ARC FLASH.
10. ALL PANELBOARDS SHALL BE "DOOR-IN-DOOR" OR "HINGED-FRONT-TRIM" CONSTRUCTION.
11. COMPLY WITH NEC ARTICLE 408.4. PROVIDE A TYPED CIRCUIT DIRECTORY THAT INDICATES WHAT EACH CIRCUIT IS SERVING. FOR LIGHTING AND RECEPTACLE CIRCUITS, INCLUDE THE ROOM NUMBER IN THE CIRCUIT DESCRIPTION ON THE DIRECTORY.
12. EACH PANELBOARD SHALL HAVE A NAMEPLATE AS SHOWN IN DETAIL 1 ON THIS SHEET. ENGINEER WILL NOT PROVIDE FINAL ACCEPTANCE UNTIL THESE NAMEPLATES ARE PROVIDED.
13. MANUFACTURER THAT WILL BE PROVIDING PANELBOARDS ON THIS PROJECT SHALL BE RESPONSIBLE FOR PERFORMING A SHORT CIRCUIT ANALYSIS AND TIME-CURRENT COORDINATION (TCC) STUDY, WHICH DEMONSTRATES THAT THE UPSTREAM OVERCURRENT PROTECTIVE DEVICE NEAREST TO THE FAULT LOCATION WILL OPERATE BEFORE OVERCURRENT PROTECTIVE DEVICES WHICH ARE FURTHER UPSTREAM (I.E. SELECTIVE COORDINATION). INCLUDE COORDINATION STUDY IN THE SHOP DRAWING PACKAGE FOR THE PANELBOARDS FOR REVIEW BY THE ENGINEER OF RECORD. AIC RATINGS MAY BE LOWERED BASED ON STUDY.
14. ALL CIRCUIT BREAKERS 1200 AMPS AND UP SHALL COMPLY WITH NEC ARTICLE 240.87 ARC ENERGY REDUCTION.

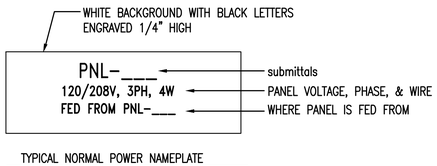

TYPICAL NORMAL POWER NAMEPLATE

1 / E5.2 DETAIL - TYPICAL PANELBOARD NAMEPLATE
NO SCALE



NOTES:
1. PROVIDE SELF-ADHESIVE VINYL LABEL TO AFFIX TO ELECTRICAL EQUIPMENT TO WARN OF ARC FLASH HAZARDS.
2. THE LABEL FORMAT AND TEXT SHALL BE IN ACCORDANCE WITH THE FIGURE.
3. THE LABEL SHALL BE LOCATED ON THE EQUIPMENT TO BE CLEARLY VISIBLE TO QUALIFIED PERSONS BEFORE EXAMINATION, ADJUSTMENT, SERVICING, OR MAINTENANCE OF THE EQUIPMENT.
4. THE SIZE OF THE LABEL SHALL BE:

EQUIPMENT TYPE	HEIGHT	WIDTH
INDOOR	4"	6"
OUTDOOR	4"	6"

2 / E5.2 ARC FLASH WARNING LABELS
NO SCALE

Gunn & Associates, P.C.
Consulting Engineers
3102 Highway 14
Millbrook, AL 36054
Tel: 334.285.1273
1200 Providence Park, Suite 200
Birmingham, AL 35242
GA#18-109

SEAY SEAY & LITCHFIELD
1115 South Court Street
Montgomery, AL 36104
(334) 263-5162

Owner:
The Armory Commission of Alabama
1720 Cong WL Dickinson Drive
Montgomery, AL 36109

SS&L Job Number
14057

IFB Job Number
AC-22-B-0004-S

Date
JANUARY 2022

Drawn By
SBW

Checked By
KRG

Revised
-

Project Title
NORTHPORT
FMS #9 RENOVATIONS
NORTHPORT, AL

Sheet Title
PANELBOARD SCHEDULES AND DETAILS

Sheet Number
E5.2

ALABAMA REGISTERED
NO. 26988
PROFESSIONAL ENGINEER
KENNETH RAY GUNN JR.
01-07-22

PANELBOARD LPC

TYPE: 400 AMP MAIN LUGS		AIC: 42,000 AMPERES				MOUNTED: SURFACE				VOLTAGE: 120/208 VOLTS, 3 PHASE, 4 WIRE			
CIRCUIT DIRECTORY	(VA) PER PHASE			AMP	POLE	CIRCUIT NUMBER		AMP	POLE	(VA) PER PHASE			CIRCUIT DIRECTORY
	PHASE A	PHASE B	PHASE C							PHASE A	PHASE B	PHASE C	
CEH-1	1,000			20		1	2	20	1	360			GIR-1
		1,000			2	3	4	20	1		360		GIR-2
VEF-1			2,904	60		5	6	20	1			360	GIR-3
	2,904					7	8	20	1	360			GIR-4
		2,904			3	9	10	20	1		360		GIR-5
VEF-2			2,904	60		11	12	20	1			360	GIR-6
	2,904					13	14	20	1	360			GIR-7
		2,904			3	15	16	20	1		360		GIR-8
DF-1			1,200	20		17	18	20	1			360	GIR-9
	1,200					19	20	20		1,200			DF-5
		1,200			3	21	22				1,200		
DF-2			1,200	20		23	24		3			1,200	
	1,200					25	26	20		1,200			DF-6
		1,200			3	27	28				1,200		
DF-3			1,200	20		29	30		3			1,200	
	1,200					31	32	20	1	200			EF-4
		1,200			3	33	34	20	1		200		EF-8
DF-4			1,200	20		35	36	20	1			500	GWH-1
	1,200					37	38	20	1	600			CP-1
		1,200			3	39	40	20	1		864		SP-1
SPARE				20	1	41	42	30	1			2,880	MOTORIZED DOOR #1
CORD N REEL 3 PHASE	2,880			30		43	44	30	1	2,880			MOTORIZED DOOR #2
		2,880				45	46	30	1		2,880		MOTORIZED DOOR #3
			2,880		3	47	48	30	1			2,880	MOTORIZED DOOR #4
CORD N REEL 3 PHASE	2,880			30		49	50	30	1	2,880			MOTORIZED DOOR #5
		2,880				51	52	30	1		2,880		MOTORIZED DOOR #6
			2,880		3	53	54	30	1			2,880	MOTORIZED DOOR #7
SPARE				20		55	56	30	1	2,880			MOTORIZED DOOR #8
						57	58	30	1		2,880		MOTORIZED DOOR #9
					3	59	60	30	1			2,880	MOTORIZED DOOR #10
SPARE				20		61	62	20	1	600			RECEPTACLE
						63	64	20	1		1,200		RECEPTACLE
					3	65	66	20	1			1,200	CORD N REEL 110V
BUSSED SPACE				50	1	67	68	20	1	1,200			CORD N REEL 110V
BUSSED SPACE				50	1	69	70	20	1				SPARE
BUSSED SPACE				50	1	71	72	20	1				SPARE
BUSSED SPACE				50	1	73	74	20	1				SPARE
BUSSED SPACE				50	1	75	76	20	1				SPARE
BUSSED SPACE				50	1	77	78	20	1				SPARE
BUSSED SPACE				50	1	79	80	20	1				SPARE
BUSSED SPACE				50	1	81	82	20	1				SPARE
BUSSED SPACE				50	1	83	84	20	1			1,000	FACP (NOTE 3)
SUB TOTAL (VA)	17,368	17,368	16,368							14,720	14,384	17,700	SUB TOTAL (VA)

TOTAL LOAD PHASE A: 32,088 (VA)
TOTAL LOAD PHASE B: 31,752 (VA)
TOTAL LOAD PHASE C: 34,068 (VA)
TOTAL LOAD: 97,908 (VA) = 272 AMPS

NOTES:
1. PANELBOARD TO BE BOLT-ON TYPE WITH DOOR-IN-DOOR CONSTRUCTION.
2. PROVIDE ARC FAULT LABEL PER DETAIL.
3. LOCK HANDLE CIRCUIT BREAKER

PANELBOARD RPA

TYPE: 150 AMP MAIN BREAKER		AIC: 22,000 AMPERES				MOUNTED: SURFACE				VOLTAGE: 120/208 VOLTS, 3 PHASE, 4 WIRE			
CIRCUIT DIRECTORY	(VA) PER PHASE			AMP	POLE	CIRCUIT NUMBER		AMP	POLE	(VA) PER PHASE			CIRCUIT DIRECTORY
	PHASE A	PHASE B	PHASE C							PHASE A	PHASE B	PHASE C	
LIGHTS	480			20	1	1	2	60		252			RPB
LIGHTS		398		20	1	3	4				800		
RECEPT			400	20	1	5	6		3			0	
RECEPT	400			20	1	7	8	60		4,644			RPWR
EUH-1		3,750		50		9	10				1,440		
			3,750		2	11	12		3			2,500	
EUH-2	3,750			50		13	14	50					SPARE
		3,750			2	15	16						
EF-1			1,920	20	1	17	18		3				
MD-1 & MD-2	600			20	1	19	20	30					SPARE
SPARE				20	1	21	22						
SPARE				20	1	23	24		3				
SPARE				20	1	25	26	50	1				BUSSED SPACE
SPARE				20	1	27	28	50	1				BUSSED SPACE
SPARE				20	1	29	30	50	1				BUSSED SPACE
SPARE				20	1	31	32	50	1				BUSSED SPACE
SPARE				20	1	33	34	50	1				BUSSED SPACE
BUSSED SPACE				50	1	35	36	50	1				BUSSED SPACE
BUSSED SPACE				50	1	37	38	50	1				BUSSED SPACE
BUSSED SPACE				50	1	39	40	50	1				BUSSED SPACE
BUSSED SPACE				50	1	41	42	50	1				BUSSED SPACE
SUB TOTAL (VA)	5,230	7,898	6,070							4,896	2,240	2,500	SUB TOTAL (VA)

TOTAL LOAD PHASE A: 10,126 (VA)
TOTAL LOAD PHASE B: 10,138 (VA)
TOTAL LOAD PHASE C: 8,570 (VA)
TOTAL LOAD: 28,834 (VA) = 80 AMPS

NOTES:
1. PANELBOARD TO BE BOLT-ON TYPE WITH DOOR-IN-DOOR CONSTRUCTION.
2. PROVIDE ARC FAULT LABEL PER DETAIL.
3. PANELBOARD SHALL BE UL LISTED FOR SERVICE ENTRANCE.

PANELBOARD RPB

TYPE: 60 AMP MAIN BREAKER		AIC: 22,000 AMPERES				MOUNTED: SURFACE				VOLTAGE: 120/208 VOLTS, 3 PHASE, 4 WIRE			
CIRCUIT DIRECTORY	(VA) PER PHASE			AMP	POLE	CIRCUIT NUMBER		AMP	POLE	(VA) PER PHASE			CIRCUIT DIRECTORY
	PHASE A	PHASE B	PHASE C							PHASE A	PHASE B	PHASE C	
LIGHTS	252			20	1	1	2	50	1				BUSSED SPACE
RECEPT		800		20	1	3	4	50	1				BUSSED SPACE
SPARE				20	1	5	6	50	1				BUSSED SPACE
SPARE				20	1	7	8	50	1				BUSSED SPACE
SPARE				20	1	9	10	50	1				BUSSED SPACE
SPARE				20	1	11	12	50	1				BUSSED SPACE
SUB TOTAL (VA)	252	800	0							0	0	0	SUB TOTAL (VA)

TOTAL LOAD PHASE A: 252 (VA)
TOTAL LOAD PHASE B: 800 (VA)
TOTAL LOAD PHASE C: 0 (VA)
TOTAL LOAD: 1,052 (VA) = 3 AMPS

NOTES:
1. PANELBOARD TO BE BOLT-ON TYPE WITH DOOR-IN-DOOR CONSTRUCTION.
2. PROVIDE ARC FAULT LABEL PER DETAIL.
3. PANELBOARD SHALL BE UL LISTED FOR SERVICE ENTRANCE.

PANELBOARD RPWR

TYPE: 60 AMP MAIN BREAKER		AIC: 22,000 AMPERES				MOUNTED: SURFACE				VOLTAGE: 120/208 VOLTS, 3 PHASE, 4 WIRE			
CIRCUIT DIRECTORY	(VA) PER PHASE			AMP	POLE	CIRCUIT NUMBER		AMP	POLE	(VA) PER PHASE			CIRCUIT DIRECTORY
	PHASE A	PHASE B	PHASE C							PHASE A	PHASE B	PHASE C	
LIGHTS	1,104			20	1	1	2	20		1,040			DIVERTER VALUE
RECEPT		400		20	1	3	4		2		1,040		
RECEPT			2,500	30		5	6	50	1				BUSSED SPACE
	2,500				2	7	8	50	1				BUSSED SPACE
SPARE				20	1	9	10	50	1				BUSSED SPACE
SPARE				20	1	11	12	50	1				BUSSED SPACE
SUB TOTAL (VA)	3,604	400	2,500							1,040	1,040	0	SUB TOTAL (VA)

TOTAL LOAD PHASE A: 4,644 (VA)
TOTAL LOAD PHASE B: 1,440 (VA)
TOTAL LOAD PHASE C: 2,500 (VA)
TOTAL LOAD: 8,584 (VA) = 24 AMPS

NOTES:
1. PANELBOARD TO BE BOLT-ON TYPE WITH DOOR-IN-DOOR CONSTRUCTION.
2. PROVIDE ARC FAULT LABEL PER DETAIL.
3. PROVIDE IN NEMA 3R ENCLOSURE.
4. PANELBOARD SHALL BE UL LISTED FOR SERVICE ENTRANCE.

Gunn & Associates, P.C.
Consulting Engineers
3102 Highway 14
Millbrook, AL 36054
Tel: 334.285.1273
1200 Providence Park, Suite 200
Birmingham, AL 35242
GA#18-109

SEAY SEAY & LITCHFIELD
1115 South Court Street
Montgomery, AL 36104
(334) 263-5162

Owner:
The Armory Commission of Alabama
1720 Cong WL Dickinson Drive
Montgomery, AL 36109

SS&L Job Number
14057

IFB Job Number
AC-22-B-0004-S

Date
JANUARY 2022

Drawn By
SBW

Checked By
KRG

Revised
-

Project Title
NORTHPORT
FMS #9 RENOVATIONS
NORTHPORT, AL

Sheet Title
PANELBOARD SCHEDULES

Sheet Number
E5.3

ALABAMA REGISTERED
NO. 26988
PROFESSIONAL
ENGINEER
KENNETH RAY GUNN, JR.
01-07-22

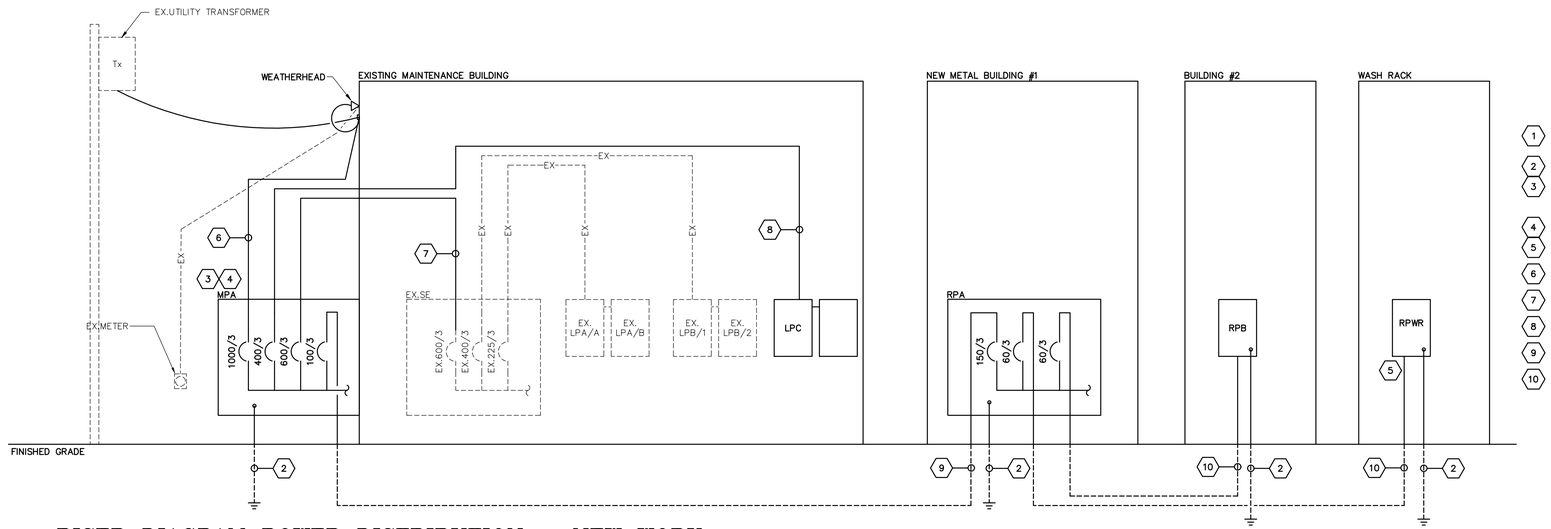

1 E6.1 RISER DIAGRAM POWER DISTRIBUTION - NEW WORK

NO SCALE

SHEET NOTES:

1. ELECTRICAL CONTRACTOR SHALL REMOVE SERVICE ENTRANCE BOND AND GROUNDING AT EXISTING PANELBOARD TO REMAIN.
2. SEE SERVICE GROUND DETAILS SHEET E6.2
3. PANELBOARD SHALL BE MOUNTED IN NEMA 3R ENCLOSURE. NO CONDUIT PENETRATIONS SHALL BE MADE AT TOP OF PANELBOARD CAN. PANELBOARD IS 120/208V., 3PH., 4W. INTEGRAL TVSS, RATED FOR SERVICE ENTRANCE EQUIPMENT
4. SEE PANELBOARD SCHEDULES FOR ADDITIONAL INFORMATION.
5. PANELBOARD SHALL BE MOUNTED IN NEMA 3R ENCLOSURE. NO CONDUIT PENETRATIONS SHALL BE MADE AT TOP OF PANELBOARD CAN.
6. THREE RUNS OF 4#400KCMIL - 3"C
7. TWO RUNS OF 4#350KCMIL & 1#1GRD - 3 1/2"C
8. 4#500KCMIL & 1#3GRD - 4"C
9. 4#3/0 & 1#6GRD - 2 1/2"C
10. 4#3 & 1#8GRD - 1 1/2"C

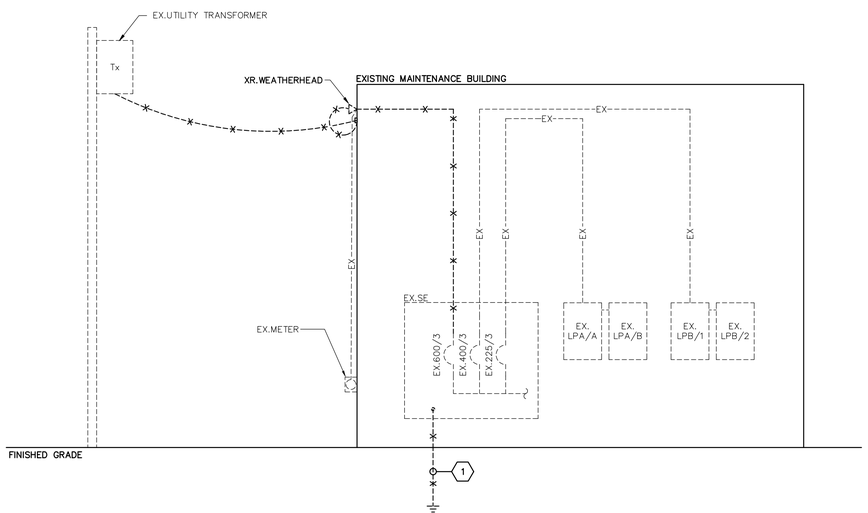

2 E6.1 RISER DIAGRAM POWER DISTRIBUTION - DEMOLITION

NO SCALE

POWER RISER DIAGRAM NOTES:

1. INSTALLATION AND CONNECTION OF ALL DEVICES SHALL BE IN ACCORDANCE WITH NEC, MANUFACTURER'S RECOMMENDATIONS, AND STATE AND LOCAL CODES.
2. CONTRACTOR IS RESPONSIBLE FOR THE CONNECTING, INSTALLATION, AND MARKING OF ALL POWER FEEDER CONDUCTORS FOR THE PROPER PHASE SEQUENCE AND LOADING . CONTRACTOR SHALL TEST EACH FEEDER AND EQUIPMENT FEEDERS WITH A PHASE METER PRIOR TO CONNECTING LOADS.
3. THE CONTRACTOR IS RESPONSIBLE FOR COORDINATING AND VERIFYING WITH ALL DIVISIONS THE ACTUAL NAMEPLATE DATA OF ALL EQUIPMENT AND DEVICES SUPPLIED ON THIS PROJECT PRIOR TO BID. CONTRACTOR SHALL THEN PROVIDE THE PROPERLY SIZED OVERCURRENT DEVICES (CIRCUIT BREAKERS, CONDUCTORS, DISCONNECTS, FUSES, ETC.) TO PROPERLY PROTECT THE EQUIPMENT PER THE NEC. ENGINEER'S DESIGN BASED ON DATA GIVEN TO HIM BY DESIGNERS OF OTHER DIVISIONS, ACTUAL NAMEPLATE DATA COULD DIFFER.
4. SEAL ALL CONDUITS FROM THE EXTERIOR WITH A SEALING COMPOUND, ONCE ALL CABLING HAS BEEN INSTALLED.
5. PROVIDE 4" CONCRETE HOUSEKEEPING PAD WITH 1" CHAMFER FOR ALL FLOOR MOUNTED TRANSFORMERS AND SWITCHBOARDS.
6. COORDINATE WITH GROUNDING DETAILS ON SHEET E7.02 FOR ALL THE DIFFERENT TYPE GROUNDING REQUIREMENTS.
7. ALL UNDERGROUND SECONDARY FEEDERS SHALL BE A MINIMUM OF 36" BELOW GRADE TO THE TOP OF THE DUCT BANK.
8. ALL UNDERGROUND PRIMARY FEEDERS SHALL BE A MINIMUM OF 48" BELOW GRADE TO THE TOP OF THE CONDUIT.
9. CONTRACTOR SHALL PROVIDE A FULL SIZE COPY OF THE AS-BUILT POWER RISER DIAGRAM FRAMED BEHIND PLEXIGLASS SCREWED TO THE WALL NEAR MAIN SERVICE PANEL.

NOTES:

1. CONTRACTOR SHALL CALCULATE AND PROVIDE NAMEPLATE ON THE SERVICE ENTRANCE EQUIPMENT THAT INDICATES THE MAXIMUM AVAILABLE FAULT CURRENT AND THE DATE THE CALCUALTION WAS PERFORMED. SEE NAMEPLATE REQUIREMENTS BELOW.

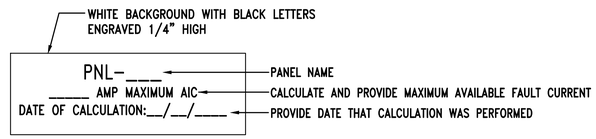

TYPICAL SERVICE ENTRANCE FAULT CURRENT NAMEPLATE

2 E6.1 DETAIL - SERVICE ENTRANCE FAULT CURRENT NAMEPLATE

NO SCALE

Gunn & Associates, P.C.
Consulting Engineers
3102 Highway 14
Millbrook, AL 36054
Tel: 334.285.1273
1200 Providence Park, Suite 200
Birmingham, AL 35242
GA#18-109

SEAY SEAY & LITCHFIELD

1115 South Court Street
Montgomery, AL 36104
(334) 263-5162

Owner:
The Armory Commission of Alabama
1720 Cong WL Dickinson Drive
Montgomery, AL 36109

SS&L Job Number
14057

IFB Job Number
AC-22-B-0004-S

Date
JANUARY 2022

Drawn By
SBW

Checked By
KRG

Revised
-

Project Title
NORTHPORT
FMS #9 RENOVATIONS
NORTHPORT, AL

Sheet Title
RISER DIAGRAM POWER DISTRIBUTION

Sheet Number
E6.1

ALABAMA REGISTERED PROFESSIONAL ENGINEER
NO. 26988
01-07-22
KENNETH RAY GUNN JR.

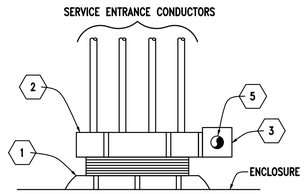

FOR SERVICE ENTRANCE CONDUITS

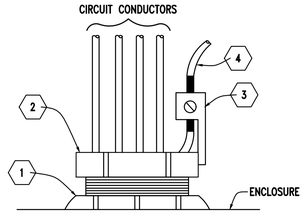

FOR FEEDER AND/OR BRANCH CIRCUITS

DETAIL NOTES

1. LOCK-NUT ASSEMBLIES
2. METAL GROUNDING BUSHING
3. COPPER GROUND LUG
4. COPPER GROUND CONDUCTOR. REMOVE INSULATION AT BUSHING, RUN THROUGH BUSHING LUG AND BOND TO RACEWAY SYSTEM. DO NOT SPLICE OR TAP.
5. CONTINOUS COPPER GROUND CONDUCTOR FROM GROUND BUS THROUGH EACH BUSHING. DO NOT SPLICE OR TAP.

1 DETAIL – TYPICAL GROUND BUSHING INSTALLATION

E6.2

NO SCALE

NOTES

1. GROUNDING ELECTRODE SYSTEM SHALL BE IN ACCORDANCE WITH NEC ARTICLE 250
2. GROUNDING ELECTRODE CONDUCTORS SHALL BE CONTINUOUS AND NOT SPLICED.
3. GROUNDING ELECTRODE CONDUCTORS SHALL BE ENCLOSED FULL LENGTH GALVANIZED RIGID CONDUIT AS INDICATED.
4. GROUNDING ELECTRODE CONDUCTORS SHALL BE BARE COPPER.
5. ALL BUSHINGS INSTALLED IN DIRECT CONTACT WITH EARTH SHALL BE APPROVED FOR THE PURPOSE.
6. GROUND CONNECTIONS BELOW GRADE SHALL BE EXOTHERMICALLY WELDED TYPE.
7. PROVIDE GROUNDING JUMPERS FROM COLD WATER PIPING TO HOT WATER PIPING AT EACH WATER HEATER. PROVIDE GROUNDING JUMPERS AT EACH INSULATED JOINT OR ANY PLACE WHERE GROUND IS BROKEN TO MAINTAIN INTEGRITY OF GROUNDING SYSTEM.

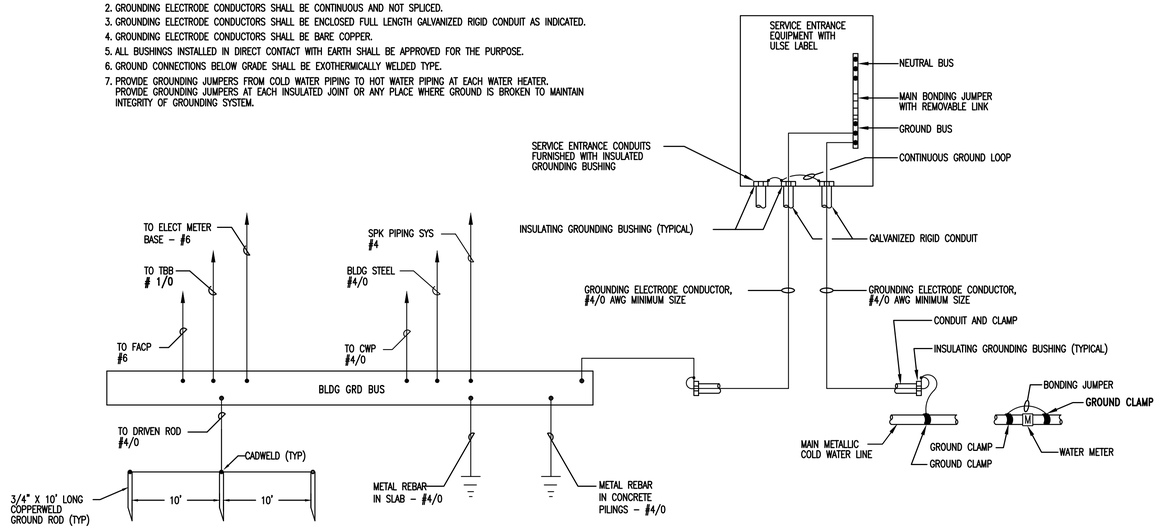

2 DETAIL – SERVICE ENTRANCE GROUNDING INSTALLATION

E6.2

NO SCALE

GROUNDING AND BONDING INSTALLATION NOTES

1. ALL GROUNDING AND BONDING SHALL BE IN ACCORDANCE WITH THE NEC, NESC, IEEE, ANSI AND UL STANDARDS.
2. ALL DIMENSIONING INDICATED IN THESE DOCUMENTS ARE FOR REFERENCE AND COORDINATION PURPOSES ONLY. THE CONTRACTOR IS RESPONSIBLE FOR VERIFYING ALL DIMENSIONS IN THE FIELD.
3. THE PURPOSE OF THE GROUNDING AND BONDING SYSTEM IS TO ESTABLISH ALL EQUIPMENT ENCLOSURES, NON-CURRENT CARRYING METALLIC PORTIONS OF THE ELECTRICAL DISTRIBUTION SYSTEM, METAL PIPING, METAL BUILDING FRAME, ETC., AT A ZERO POTENTIAL RELATIVE TO THE EARTH GROUND AND PROVIDE FOR A SAFE, LOW IMPEDANCE RETURN PATH FOR GROUND-FAULT CURRENT. THIS SHALL BE ACCOMPLISHED IN THE FOLLOWING MANNER:
   a. PROVIDE A SOLIDLY GROUNDED SECONDARY SYSTEM.
   b. INTER-CONNECT ALL GROUND BUSES AND POINTS IN THE SYSTEM WITH A COPPER GRD CONDUCTOR (BUS) SYSTEM.
   c. ALL METALLIC RACEWAYS SHALL BE UL APPROVED AND MADE-UP TIGHT AT ALL COUPLINGS AND TERMINATIONS.
   d. ALL GROUND CONDUCTORS IN CIRCUITS SHALL BE CONTAINED WITHIN THE SAME RACEWAY AS CURRENT CARRYING CONDUCTORS.
   e. ALL SPLICES AND TERMINATIONS SHALL BE MADE TIGHT AND AS SUCH TO PROVIDE LOW IMPEDANCE AND SHALL HAVE THE SAME SHORT-TIME CURRENT-CARRYING CAPABILITY AS THE CONDUCTOR IT IS CONNECTED TO.
   f. ALL GRD ELECTRODES OR BONDING CONDUCTORS INSTALLED ALONE WITHIN A RACEWAY SHALL UTILIZE GRC WITH GROUNDING BUSHINGS AT EACH END. THIS GROUND CONDUCTOR SHALL LOOP THROUGH THE BUSHING LUG PRIOR TO TERMINATION.

DIMENSION BLOCK		
REF	ENGLISH	SI
A	1"	25.4mm
B	2"	50.8mm
C	2 1/2"	63.5mm
D	3"	76.2mm
E	1'-6"	.4572m

GROUND BUS NOTES

1. GROUND BUS INSTALLATION SHALL BE IN ACCORDANCE WITH THIS DETAIL AND AS INDICATED ON THE DRAWINGS.

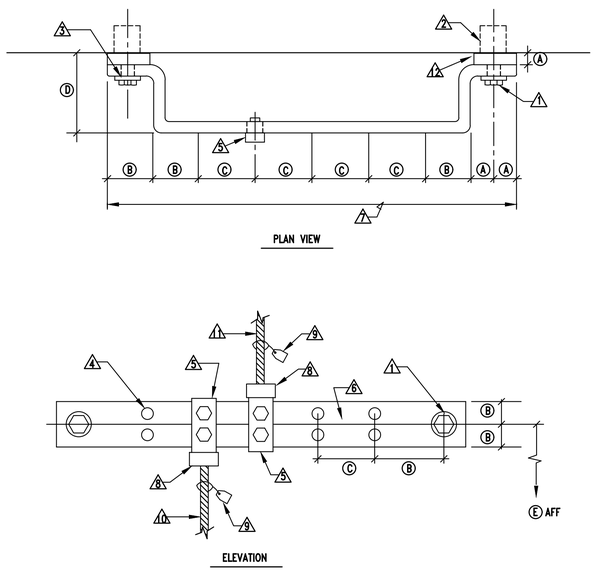

KEYED NOTES

1. 1/2" (12.7mm) X 1 1/2" (38.1mm) SILICON-BRONZE MACHINE BOLT & SILICON-BRONZE WASHER
2. 1/2" (12.7mm) EXPANSION ANCHOR
3. 9/16"ø (14.2875mm) HOLE IN BAR
4. DRILLED DOUBLE CONNECTOR HOLES
5. FLAT, TWO-HOLE CU CABLE CONNECTOR #6 TO #2 (DOUBLE LUGS) #1 TO #4/0 (SINGLE LUGS ONLY)
6. 4" (101.6mm) WIDE, 1/4" (6.35mm) DEEP COPPER BUS BAR.
7. LENGTH AS REQUIRED BY NUMBER OF CONDUCTOR CONNECTIONS OR AS SPECIFICALLY INDICATED. PROVIDE INTERMEDIATE WALL SUPPORTS AS REQUIRED.
8. TYP CU GRD CONDUCTOR CONNECTION
9. DESCRIPTION TAG. STATE SIZE OF CONDUCTOR AND TO WHAT IT IS CONNECTED TO.
10. TYP GRD CONNECTION FROM BELOW. SEE APPLICABLE DETAILS FOR SLAB PENETRATIONS.
11. TYP GRD CONNECTION FROM ABOVE. SEE APPLICABLE DETAILS FOR GRC INSTALLATIONS.
12. INSULATED NON-CONDUCTIVE SPACER

3 DETAIL – TYPICAL GROUND BUS INSTALLATION

E6.2

NO SCALE

Gunn & Associates, P.C.
Consulting Engineers
3102 Highway 14
Millbrook, AL 36054
Tel: 334.285.1273
1200 Providence Park, Suite 200
Birmingham, AL 35242
GA#18-109

SEAY SEAY & LITCHFIELD

1115 South Court Street
Montgomery, AL 36104
(334) 263-5162

Owner:
The Armory Commission of Alabama
1720 Cong WL Dickinson Drive
Montgomery, AL 36109

SS&L Job Number
14057

IFB Job Number
AC-22-B-0004-S

Date
JANUARY 2022

Drawn By
SBW

Checked By
KRG

Revised
–

Project Title
NORTHPORT
FMS #9 RENOVATIONS
NORTHPORT, AL

Sheet Title
GROUNDING DETAILS

Sheet Number
E6.2

ALABAMA REGISTERED
NO. 26988
PROFESSIONAL
01-07-22
KENNETH RAY GUNN JR
ENGINEER