BID DRAWINGS

F O R

NEW COTTONWOOD FIELDHOUSE / WEIGHT ROOM BUILDING

COTTONWOOD, ALABAMA

FOR

HOUSTON COUNTY BOARD OF EDUCATION

SUPERINTENDENT

MR. BRANDY WHITE

BOARD MEMBERS

MR. MARTY COLLINS
MR. GARY COX
MR. DAVID HOLLINGER
MR. CHRIS LASSITER
MR. SCOTT LONG
MR. VINCE WADE

DIVISION OF CONSTRUCTION MANAGEMENT B.C. No. - 2021312

APRIL 2022
Job No. 26-394.02

STATE OF ALABAMA
CLAYTON M. WILKS
7609
03/17/22
REGISTERED ARCHITECT

POLY

Revision	Description	Date

DESIGNED BY: ENG / ARCH / SURVEYOR OF RECORD:
DRAWN BY: CMW
DATE: APRIL 2022
REGISTRATION No.

	Cert. of Auth. No.	AL	FL	GA
ARCHITECT	CA-0490	AA-C001051	00011B	
ENGINEER	CA-784-E	CA-1818	00011B	

These drawings are copyrighted and the property of Poly-Inc. Any use, partial or full reproduction is prohibited except by written Agreement with Poly-Inc.

POLY, INC.
1935 Headland Avenue
Dothan, AL 36303
334-793-4700
102 Sunset Lane 2135 University Blvd. Ste. A
Shalimar, FL 32579 Tuscaloosa, AL 35401
850-609-1100 205-752-4037
WWW.POLY-INC.COM

NEW COTTONWOOD FIELDHOUSE / WEIGHTROOM BUILDING FOR HOUSTON COUNTY BOARD OF EDUCATION

COVER SHEET

SHEET No.
G-001

PROJECT No.
26-394.02

BID DOCUMENTS

Poly, Inc. - G:\CLEANSTUFF-15-28\26394 Houston BOE Open End Projects\26394.02 - Cottonwood Fieldhouse\03 - Final Design\ARCHITECTURE\CAD\26394.02_G-001 - COVER SHEET.dwg [Layout1] Last Printed: April 29, 2022 - 09:36am By: cwilks

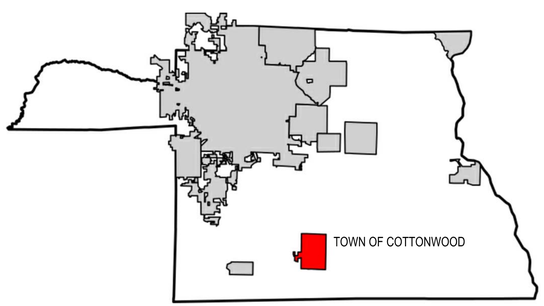

COTTONWOOD HIGH SCHOOL IS LOCATED AT 663 HOUSTON STREET
COTTONWOOD, AL 36320

VICINITY MAP
SCALE: NOT TO SCALE

INDEX OF DRAWINGS

GENERAL:
G-001 COVER SHEET
G-002 INDEX OF DRAWINGS & VICINITY MAP

LIFE SAFETY:
LS-100 CODE & LIFE SAFETY ANALYSIS
LS-101 LIFE SAFETY PLAN

CIVIL:
C1.0 EXISTING SITE PLAN
C1.1 DEMOLITION PLAN
C1.2 SITE PLAN
C1.3 STAKEOUT PLAN
C1.4 GRADING PLAN
C1.5 UTILITY PLAN
C5.0 PAVING DETAILS
C5.1 PAVING DETAILS
C5.2 SANITARY SEWER DETAILS
C5.3 WATER DETAILS
C5.4 WATER DETAILS
C5.5 - OMITTED -
C5.6 CHAIN-LINK FENCE DETAILS
C5.7 CHAIN-LINK FENCE DETAILS
C5.8 CHAIN-LINK FENCE DETAILS
C7.0 EROSION CONTROL NOTES
C7.1 EROSION CONTROL PLAN
C7.2 EROSION CONTROL DETAILS
C7.3 EROSION CONTROL DETAILS

STRUCTURAL:
S-001 GENERAL STRUCTURAL NOTES
S-002 DETAILS
S-003 SECTIONS
S-004 GENERAL STRUCTURAL NOTES
S-101 FOUNDATION PLAN
S-102 ROOF FRAMING PLAN

ARCHITECTURAL:
AS-100 ARCHITECTURAL SITE PLAN
AS-101 SIDEWALK RAMP PLAN & ELEVATION
A-100 FLOOR PLAN
A-110 ROOF PLAN
A-120 REFLECTED CEILING PLAN
A-200 EXTERIOR ELEVATIONS
A-301 BUILDING SECTIONS
A-400 ADA CLEARANCES, HEIGHTS AND EQUIPMENT REQUIREMENTS
A-401 ENLARGED FLOOR PLANS
A-410 INTERIOR ELEVATIONS
A-420 INTERIOR DETAILS
A-450 WALL SECTIONS
A-451 EXTERIOR DETAILS
A-460 SECTIONS AND DETAILS
A-600 DOOR TYPES AND SCHEDULE
A-605 DOOR DETAILS
A-610 WINDOW TYPES
A-615 WINDOW DETAILS
A-620 FINISH SCHEDULE

PLUMBING:
P-100 FLOOR PLAN - PLUMBING - WASTE & VENT PIPING
P-200 FLOOR PLAN - PLUMBING - COLD & HOT WATER PIPING
P-300 RISER DIAGRAMS
P-400 SCHEDULE & DETAILS
P-500 SCHEDULE & DETAILS

MECHANICAL:
M-100 FLOOR PLAN
M-200 SCHEDULES
M-300 SCHEDULES
M-400 DETAILS

ELECTRICAL:
E-100 FLOOR PLAN - LIGHTING
E-200 FLOOR PLAN - POWER & AUX.
E-300 FLOOR PLAN - FIRE ALARM
E-301 SCHEDULES AND DETAILS
E-400 FLOOR PLAN - FIRE ALARM

LEGEND

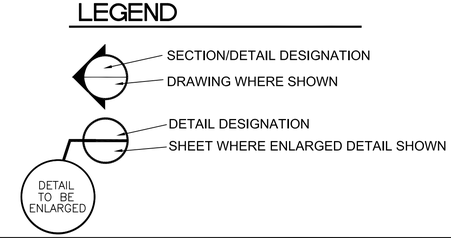

STATE OF ALABAMA
CLAYTON M. WILKS
7609
03/17/22
REGISTERED ARCHITECT

POLY

Revision	Description	Date

DESIGNED BY: DRAWN BY: CMW
DATE: MARCH 2022
ENG / ARCH / SURVEYOR OF RECORD: REGISTRATION No.
ARCHITECT CA-0490 Cert. of Auth. No. AA-C001001 FL GA. 001118 001118
ENGINEER CA-742 CA-1818

POLY, INC.
1935 Headland Avenue
Dothan, AL 36303
334-793-4700
102 Sunset Lane 2135 University Blvd, Ste. A
Shallmar, FL 32579 Tuscaloosa, AL 35401
850-609-1100 205-752-4037
WWW.POLY-INC.COM

These drawings are copyrighted and are property of Poly-Inc. Any use, partial or full reproduction is prohibited except by written Agreement with Poly-Inc.

NEW COTTONWOOD FIELDHOUSE / WEIGHTROOM BUILDING FOR HOUSTON COUNTY BOARD OF EDUCATION

INDEX OF DRAWINGS & VICINITY MAP

SHEET No.
G-002
PROJECT No.
26-394.02

BID DOCUMENTS

Poly, Inc. - G:\CLEANSTUFF-15-28\26394 Houston BOE Open End Projects\26394.02 - Cottonwood Fieldhouse\03 - Final Design\ARCHITECTURE\CAD\26394.02_G-002 - INDEX OF DRAWINGS & VICINITY MAP.dwg [Layout1] Last Printed: April 27, 2022 - 01:39pm By: jbrady

CODE ANALYSIS

CHAPTER 1 SCOPE AND ADMINISTRATION:
THE WORK FOR THIS PROJECT SHALL CONFORM TO THE 2015 INTERNATIONAL BUILDING CODE WITHOUT APPENDICIES.

PROJECT LOCATION:
COTTONWOOD HIGH SCHOOL
COTTONWOOD, ALABAMA

CHAPTER 3 USE AND OCCUPANCY CLASSIFICATION:

MAIN BUILDING OCCUPANCY - EDUCATIONAL GROUP "E"

- SINGLE OCCUPANCY BUILDING

CHAPTER 4 SPECIAL REQUIREMENTS BASED ON USE AND OCCUPANCY:

- NO SPECIAL REQUIREMENTS BASED ON OCCUPANCY

CHAPTER 5 GENERAL HEIGHT AND AREAS:

- CONSTRUCTION TYPE = 'III-B'
- FULLY SPRINKED? = NO
- BUILDING HEIGHT = 21'-5"
- NUMBER OF STORIES = 1
- GROSS ENCLOSED FOOTPRINT = 9,153 S.F.
- CANOPIES AND OVERHANGS = 1,363 S.F.
- TOTAL UNDER ROOF = 10,516 S.F.

- ALLOWABLE STORIES = 2
- ALLOWABLE BUILDING HEIGHT = 55'
- ALLOWABLE TABULAR BUILDING AREA = 14,500 S.F.

- AREA INCREASE? = NONE TAKEN

509 INCIDENTAL USES

- LAUNDRY ROOMS OVER 100 S.F. = 1 HOUR SEPARATION

CHAPTER 6 TYPES OF CONSTRUCTION:

TYPE IIIB - EXTERIOR WALLS ARE OF NONCOMBUSTIBLE MATERIALS AND INTERIOR BUILDING ELEMENTS ARE OF ANY PERMITTED BY THE BUILDING CODE.

TABLE 601 FIRE RESISTANCE RATING FOR STRUCTURAL ELEMENTS:

TYPE IIIB CONSTRUCTION
A. PRIMARY STRUCTURAL FRAME = 0
B. BEARING WALLS
INTERIOR = 0
EXTERIOR = 2
C. NONBEARING WALLS
EXTERIOR = 0
INTERIOR = 0
D. FLOOR CONSTRUCTION = 0
E. ROOF CONSTRUCTION = 0

TABLE 602 FIRE RESISTANCE RATING FOR EXTERIOR WALLS BASED ON FIRE SEPARATION DISTANCE: >30', THEREFORE RATING SHALL BE 0.

CHAPTER SEVEN:

SECTION 707 FIRE BARRIERS

707.3.7 INCIDENTAL USE AREAS SHALL BE SEPARATED IN COMPLIANCE WITH TABLE 509.

SECTION 708 FIRE PARTITIONS

708.1 CORRIDOR WALLS REQUIRED TO FIRE RATED SHALL COMPLY WITH SECTION 1020.1.

SECTION 714 PENETRATIONS

THIS SECTION SHALL GOVERN THE REQUIREMENTS OF PENETRATIONS IN RATED ASSEMBLIES.

SECTION 716 OPENING PROTECTIVES

DOORS AND FIRE SHUTTER ASSEMBLIES SHALL HAVE RATINGS AS REQUIRED BY TABLE 716.5.

-1 HOUR FIRE BARRIERS (OTHER) = 45 MINUTE DOOR W/ MAXIMUM VISION PANEL TESTED

SECTION 718 CONCEALED SPACES

718.4 REQUIRES DRAFTSTOPPING ATTICS OF COMBUSTIBLE CONSTRUCTION TO BE SUBDIVIDED INTO AREAS >3000 S.F. METAL ROOF TRUSSES AND METAL DECK USED, THEREFORE DRAFTSTOPPING NOT REQUIRED.

CHAPTER EIGHT:

SECTION 803 WALL AND CEILING FINISHES

GROUP E, NONSPRINKED REQUIREMENTS:

- INTERIOR EXIT STAIRWAYS, RAMPS, AND PASSAGEWAYS = CLASS "A" FINISH
- CORRIDORS AND ENCLOSURE FOR EXIT ACCESS STAIRWAYS AND RAMPS = CLASS "B" FINISH
- ROOMS AND ENCLOSED SPACES = CLASS "C" FINISH

CHAPTER 9 FIRE PROTECTION SYSTEMS:

903.2.3 AN AUTOMATIC SPRINKLER SYSTEM IS NOT REQUIRED IN EDUCATION OCCUPANCIES WITH FIRE AREAS LESS THAN 12,000 SF IN AREA. IN ADDITION, THE BUILDING IS SINGLE STORY.

906 PORTABLE FIRE EXTINGUISHERS SHALL BE LOCATED IN SEMI-RECESSED CABINETS. FIRE EXTINGUISHERS SHALL BE SPACED SO THAT TRAVEL DISTANCE TO A FIRE EXTINGUISHER SHALL BE NO MORE THAN 75 FEET.

CHAPTER 10 MEANS OF EGRESS:

SECTION 1004 OCCUPANT LOAD

OCCUPANCY LOAD SHALL BE IN ACCORDANCE TO TABLE 1004.1.1

ACCESSORY STORAGE AREAS, MECHANICAL EQUIPMENT ROOMS = 300 G.S.F. / OCCUPANT

LOCKER ROOMS = 50 G.S.F. / OCCUPANT

BUSINESS AREAS = 100 G.S.F. / OCCUPANT

EXCERCISE ROOMS = 50 G.S.F. / OCCUPANT

ASSEMBLY AREAS (TABLE & CHAIRS) = 15 NET PER OCCUPANT

CLASSROOM AREAS = 20 NET PER OCCUPANT

SECTION 1005 MEANS OF EGRESS SIZING

1005.3.1 STAIRWAYS = 0.3" PER OCCUPANT

1005.3.2 OTHER EGRESS COMPONENTTS = 0.2" PER OCCUPANT

1005.7.1 DOORS SHALL NOT ENCROACH THE REQUIRED EGRESS WIDTH MORE THAN 7" IN OPEN POSITION AND SHALL NOT REDUCE THE REQUIRED WIDTH MORE THAN ONE-HALF.

SECTION 1006 NUMBER OF EXITS AND EXIT ACCESS DOORWAYS

1006.2.1 TWO EXITS OR EXIT ACCESS DOORWAYS FROM ANY SPACE SHALL BE PROVIDED WHERE THE DESIGN OCCUPANT LOAD OR THE COMMON PATH OF EGRESS TRAVEL DISTANCE EXCEEDS THE VALUES LISTED IN TABLE 1006.2.1.

TABLE 1006.2.1 SPACES WITH ONE EXIT OR EXIT ACCESS DOORWAY (FOR NON-SPRINKLED BUILDING)

OCCUPANCY	OCC. LOAD	COMMON PATH OF TRAVEL
"E"	49 MAX	75' MAX

106.2.1.1 THREE EXITS OR ACCESS DOORWAYS REQUIRED FOR SPACES WITH OCCUPANT LOADS 501 TO 1000. FOUR REQUIRED FOR SPACES WITH OCCUPANT LOADS GREATER THAN 1000.

SECTION 1010 DOORS, GATES AND TURNSTILES

1010.1.1 DOORS MUST PROVIDE 32" MINIMUM CLEAR WIDTH BETWEEN DOOR FACE AND DOOR STOP WHEN OPENED AT 90 DEGREES. MAXIMUM DOOR LEAF FOR SWINGING DOOR IS 48" WIDE. DOOR HEIGHT SHALL NOT BE LESS THAN 80".

1010.1.2.1 DOORS MUST SWING IN THE DIRECTION OF EGRESS TRAVEL WHERE SERVING A ROOM OR AREA WITH OCCUPANT LOAD OF 50 OR MORE OR GROUP H OCCUPANCY.

SECTION 1011 STAIRWAYS

1011.2 STAIRWAY WIDTH SHALL BE DETERMINED BY 1005.1 BUT NOT LESS THAN 44".

1011.3 STAIRWAY HEADROOM CLEARANCE SHALL NOT BE LESS THAN 80" ABOVE STAIR NOSING.

1017 EXIT ACCESS TRAVEL DISTANCE

1017.2 EXIT ACCESS TRAVEL DISTANCE SHALL NOT EXCEED THE VALUES OF TABLE 1017.2

TABLE 1017.2 EXIT ACCESS TRAVEL DISTANCE (FOR NON-SPRINKLED BUILDING)

OCCUPANCY	TRAVEL DISTANCE
"E"	200' MAX

SECTION 1020 CORRIDORS

1020.1 CORRIDORS SHALL FIRE RATED IN ACCORDANCE WITH TABLE 1020.1

TABLE 1020.1 CORRIDOR FIRE-RESISTANCE RATING (FOR NON-SPRINKLED BUILDING)(CORRIDOR OCCUPANT LOAD GREATER THAN 30)

OCCUPANCY	FIRE RATING
"E"	1

1020.2 MINIMUM CORRIDOR WIDTH
- SIZED IN ACCORDANCE WITH 1005.1
- OCC. LOAD <50 = 36"
- GROUP "E" WITH CORRIDOR OCC. LOAD > OR = 50 = 72"
- OTHER = 44"

1020.4 DEAD END CORRIDORS. WHERE MORE THAN ONE EXIT OR EXIT ACCESS DOORWAY IS REQUIRED, NOT TO EXCEED 20' IN LENGTH. EXCEPTION: IN "B" AND "S" OCCUPANCIES WITH SPRINKLER SYSTEM NOT TO EXCEED 50' IN LENGTH.

CHAPTER ELEVEN:

SECTION 1105.1 PUBLIC ENTRANCES. AT LEAST 60 PERCENT OF ALL PUBLIC ENTRANCES SHALL BE ACCESSIBLE.

CHAPTER 29:

191 OCCUPANTS

MEN = 118
WOMEN = 73

- MALE/FEMALE RATIO: THE OWNER HAS PROVIDED ENROLLMENT DOCUMENTATION THAT MORE MALES THAN FEMALES PARTICIPATE IN SPORTS UTILIZING THIS FACILITY.

WATER CLOSETS:	MEN - 1 PER 50. THEREFORE, 3 REQUIRED. 2 TOILETS AND 2 URINALS PROVIDED.
	WOMEN - 1 PER 50. THEREFORE, 2 REQUIRED. 2 TOILETS URINALS PROVIDED.
	UNISEX - 1 UNISEX TOLIET PROVIDED
LAVATORIES:	MEN - 1 PER 50. THEREFORE, 3 REQUIRED. 2 LAVATORIES PROVIDED IN MEN. 1 ADDITIONAL PROVIDED IN UNISEX.
	WOMEN - 1 PER 50. THEREFORE, 2 REQUIRED. 2 LAVATORIES PROVIDED.
	UNISEX - 1 UNISEX TOLIET PROVIDED
DRINKING FOUNTAIN:	1 PER 100. THEREFORE, 1 DUAL HEIGHT REQUIRED. 3 DUAL HEIGHT FOUNTAINS PROVIDED.
SERVICE SINK:	1 REQUIRED. 1 PROVIDED.

OCCUPANT LOADS BY SPACE FUNCTIONS

FUNCTION	AREA	LOAD FACTOR	OCCUPANTS
STORAGE / MECH.	312	300 G.S.F.	3.1
LOCKER	1672	50 G.S.F.	33.4
BUSINESS	1636	100 G.S.F.	16.4
EXCERCISE	4111	50 G.S.F.	82.2
ASSEMBLY	264	15 N.S.F.	17.6
CLASSROOM	770	20 N.S.F.	38.5
TOTAL OCCUPANT LOAD			191.2

0 3' 6' 12
SCALE: 3/16"=1'-0"

STATE OF ALABAMA
CLAYTON M. WILLIS
7609
03/17/22
REGISTERED ARCHITECT

POLY

Revision	Description	Date
1	REVISION DESCRIPTION	00-00-0000

DESIGNED BY: CMW
DRAWN BY: CMW
DATE: MARCH 2022
ENG/ARCH/SURVEYOR OF RECORD: CLAYTON M. WILLIS
REGISTRATION No. 7609
Cert. of Auth. AL: AL: FL: GA.
ARCHITECT CA-0480 AA-C001951 I001118 I001118
ENGINEER CA-7916-E CA-1818 I001118
SURVEYOR

These drawings are copyrighted and the property of Poly-Inc. Any use or reproduction is prohibited except by written agreement with Poly-Inc.

POLY, INC.
1905 Hoover Avenue,
Dothan, AL 36303
334-793-4700

102 Sunset Lane 2135 University Blvd. Ste. A
Shalimar, FL 32579 Tuscaloosa, AL 35401
850-609-1100 205-752-4037

WWW.POLY-INC.COM

COTTONWOOD HIGH SCHOOL FIELD HOUSE FOR HOUSTON COUNTY BOARD OF EDUCATION

CODE & LIFE SAFETY ANALYSIS

SHEET No.
LS100
PROJECT No.
26394.02

BID DOCUMENTS

3/17/2022 12:12:33 PM
CODE & LIFE SAFETY ANALYSIS
G:\CLEANSTUFF-15-28\26394 Houston BOE Open End Projects\26394.02 - Cottonwood Fieldhouse\03 - Final Design\ARCHITECTURE\CHS Fieldhouse.rvt

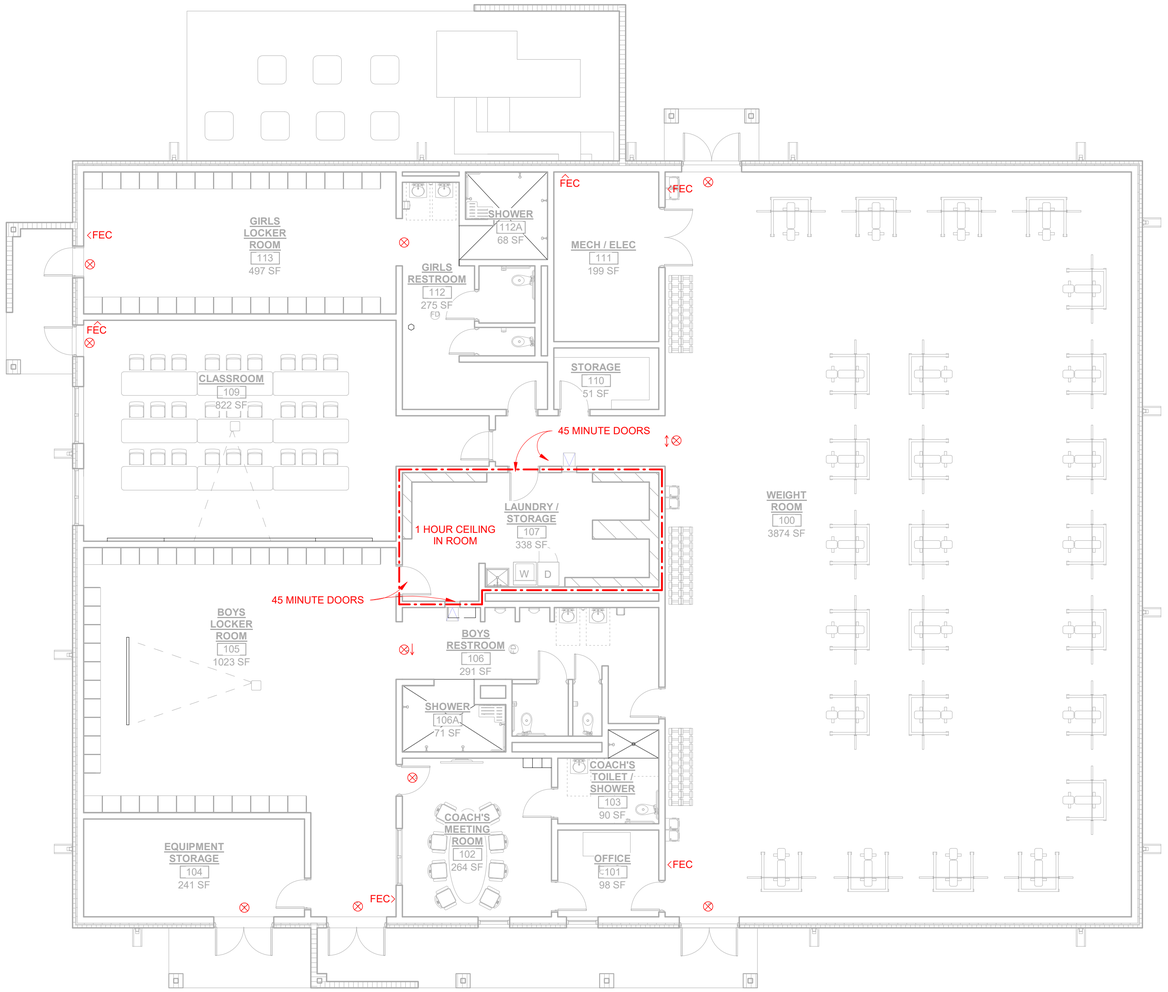

LIFE SAFETY PLAN

SCALE 1/8" = 1'-0"

LIFE SAFETY LEGEND

FEC	FIRE EXTINGUISHER CABINET
↓⊗	EXIT SIGN W/ DIRECTIONAL ARROW
—·—·—	ONE-HOUR RATED WALL
—··—··—	TWO-HOUR RATED WALL

NOTE: NEAREST BUILDING IS 100' AWAY FROM THIS BUILDING.
THE NEAREAST PROPERTY LINE IS 80' FROM THIS BUILDING.
NO EXTERIOR WALL FIRE RATINGS REQUIRED.

0 3' 6' 12
SCALE: 3/16"=1'-0"

BID DOCUMENTS

STATE OF ALABAMA
CLAYTON M. WILAS
7609
03/17/22
REGISTERED ARCHITECT

POLY

Revision	REVISION DESCRIPTION	Description	Date
1			00-00-0000

DESIGNED BY: CMW
DRAWN BY: CMW
DATE: MARCH 2022
ENGIARCHSURVEYOR OF RECORD: CLAYTON M. WILAS
REGISTRATION No. 7609
Cert. of Auth. No. AL FL GA
ARCHITECT OA-0480 AA-C001551 001118
ENGINEER CA-78-E CA-1818 001118
SURVEYOR
These drawings are copyrighted and the property of Poly-Inc. Any use, other than a full reproduction is prohibited except by written agreement with Poly-Inc.

POLY, INC.
1935 Headland Avenue
Dothan, AL 36303
334-793-4700
102 Sunset Lane 2135 University Blvd. Ste. A
Shalimar, FL 32579 Tuscaloosa, AL 35401
850-609-1100 205-752-4037
WWW.POLY-INC.COM

COTTONWOOD HIGH SCHOOL FIELD HOUSE FOR HOUSTON COUNTY BOARD OF EDUCATION

LIFE SAFETY PLAN

SHEET No.
LS101

PROJECT No.
26394.02

3/17/2022 12:13:05 PM

LIFE SAFETY PLAN

G:\CLEANSTUFF-15-28\26394 Houston BOE Open End Projects\26394.02 - Cottonwood Fieldhouse\03 - Final Design\ARCHITECTURE\CHS Fieldhouse.rvt

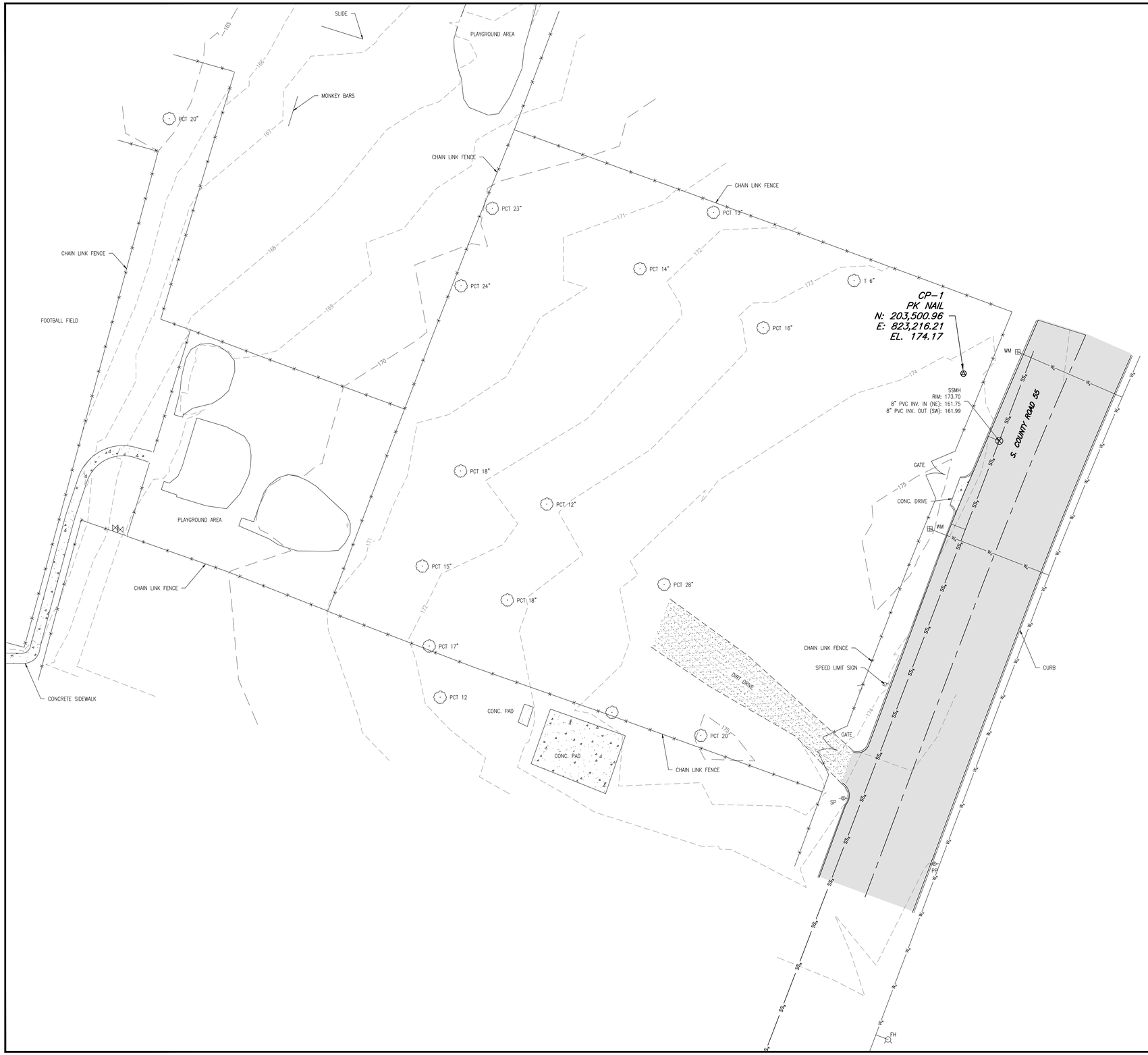

EXISTING LEGEND

SEWER MANHOLE	
FIRE HYDRANT	
WATER VALVE	
WATER METER	
LIGHT POLE	
UTILITY POLE	
GUY WIRE	
TELEPHONE BOX	
ASPHALT	
DIRT	
CONCRETE	
TREE	
FENCE	
STORM PIPE	SD_x
GAS LINE	G_x
OVERHEAD ELECTRICAL	E_x
UNDERGROUND COMMUNICATION	C_x
PROPERTY LINE	PL
SEWER MAIN	SS_x
WATER MAIN	W_x
CONTROL POINT	
MAJOR CONTOUR	250
MINOR CONTOUR	
GRATE INLET	
CENTERLINE	

NOTES:

1. SURVEY FIELD WORK COMPLETED BY POLY, INC. IN JUNE 2021.
2. HORIZONTAL SURVEY DATUM IS ALABAMA STATE PLANE, EAST ZONE, NAD83, U.S. SURVEY FEET (ZONE 0101).
3. VERTICAL DATUM IS NAVD88, U.S. SURVEY FEET.

N
W E
S

GRAPHIC SCALE

20' 10' 0 20' 40'

SCALE: 1" = 20'-0"

ALABAMA LICENSED 4/27/22 No. 29184 PROFESSIONAL ENGINEER KENNETH L. SANDERS

POLY

Revision	Description	Date

DESIGNED BY: KLS.
DRAWN BY: BJ.
DATE: MARCH 2022
ENG / ARCH / SURVEYOR OF RECORD: REGISTRATION No.

Cert. of Auth. No.	AL	FL	GA
ARCHITECT	CA-0480	AA-C001053	001118
ENGINEER	CA-782	CA-1818	001118

These drawings are copyrighted as the property of Poly-Inc. Any use, partial or full reproduction is prohibited except by written Agreement with Poly-Inc.

POLY, INC.
1935 Headland Avenue
Dothan, AL 36303
334-793-4700
102 Sunset Lane Shalimar, FL 32579 850-609-1100
2135 University Blvd. Ste. A Tuscaloosa, AL 35401 205-752-4037
WWW.POLY-INC.COM

NEW COTTONWOOD FIELDHOUSE / WEIGHTROOM BUILDING FOR HOUSTON COUNTY BOARD OF EDUCATION

EXISTING SITE PLAN

SHEET No.
C1.0

PROJECT No.
26-394.02

BID DOCUMENTS

Poly, Inc. - G:\CLEANSTUFF-15-28\26394 Houston BOE Open End Projects\26394.02 - Cottonwood Fieldhouse\02-SURVEY\23694.02_TOPO.dwg [Layout1] Last Printed: April 27, 2022 - 06:16pm By: ksanders

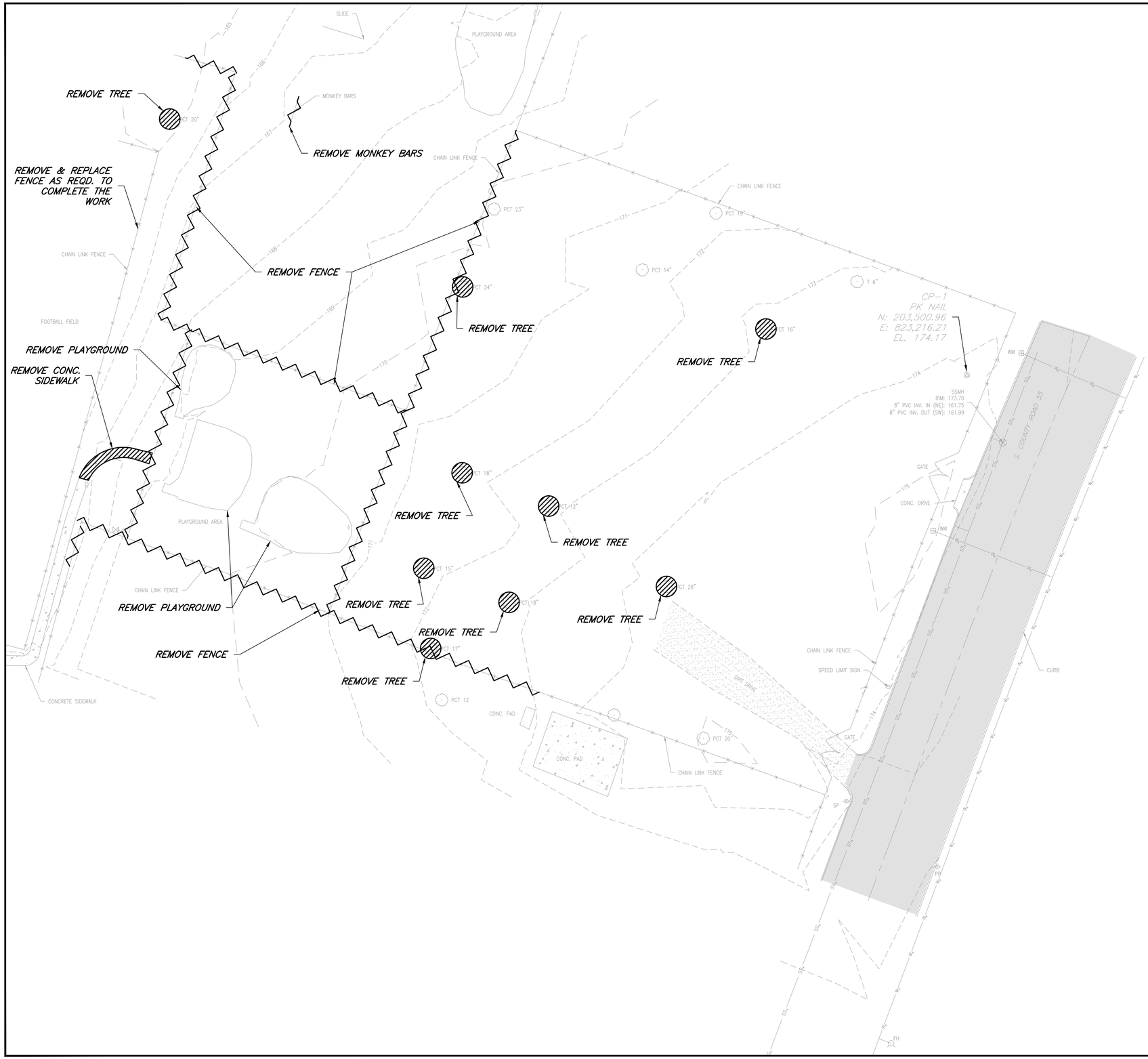

NOTES:

1. CONTRACTOR TO VERIFY LOCATION OF EXISTING UTILITIES BEFORE STARTING WORK.
2. CONTRACTOR SHALL COORDINATE SHUTTING OFF EXISTING UTILITIES WITH THE OWNER, ENGINEER, & UTILITY.
3. ALL VEGETATIVE GROWTH WITH THE CONSTRUCTION FOOTPRINT SHALL BE CLEARED/GRUBBED. CONTRACTOR TO VISIT THE SITE TO DETERMINE THE EXTENT OF WORK.
4. SITE IMPROVEMENTS THAT IMPEDE THE CONSTRUCTION SHALL BE REMOVED (ABOVE AND BELOW GROUND).
5. ALL EXISTING FEATURES NOT SHOWN TO BE DEMOLISHED SHALL REMAIN AND BE PROTECTED BY THE CONTRACTOR FOR THE DURATION OF THE CONTRACT.
6. CONTRACTOR TO INSTALL TEMPORARY CHAIN LINK FENCE, 7' TALL, IN SUFFICIENT QUANTITY TO ENCLOSE THE PROJECT SITE AND PREVENT PEDESTRIANS AND VEHICLES FROM ENTERING THE SITE. FENCE TO BE MAINTAINED FOR THE DURATION OF THE CONTRACT.

N
W E
S

GRAPHIC SCALE

20' 10' 0 20' 40'

SCALE: 1" = 20'-0"

ALABAMA LICENSED 4/27/22 No. 29184 PROFESSIONAL ENGINEER KENNETH L. SANDERS

POLY

Revision	Description	Date

DESIGNED BY: K.L.S.
DRAWN BY: B.J.
DATE: MARCH 2022
ENG / ARCH / SURVEYOR OF RECORD
REGISTRATION No.

Cert. of Auth. No.		FL	GA
ARCHITECT	CA-0480	AA-C000503	001118
ENGINEER	CA-7842	CA-1818	001118

Theses drawings are copyrighted and the property of Poly-Inc. Any use, partial or full reproduction is prohibited without written Agreement with Poly-Inc.

POLY, INC.
1935 Headland Avenue
Dothan, AL 36303
334-793-4700
102 Sunset Lane
Shalimar, FL 32579
850-609-1100
2135 University Blvd. Ste. A
Tuscaloosa, AL 35401
205-752-4037
WWW.POLY-INC.COM

NEW COTTONWOOD FIELDHOUSE / WEIGHTROOM BUILDING FOR HOUSTON COUNTY BOARD OF EDUCATION

DEMOLITION PLAN

SHEET No.
C1.1

PROJECT No.
26-394.02

BID DOCUMENTS

Poly, Inc. - G:\CLEANSTUFF-15-28\26394 Houston BOE Open End Projects\26394.02 - Cottonwood Fieldhouse\03 - Final Design\CIVIL\01-Plans\26394.02_C1.1_DEMO.dwg [Layout1] Last Printed: April 27, 2022 - 06:31pm By: ksanders

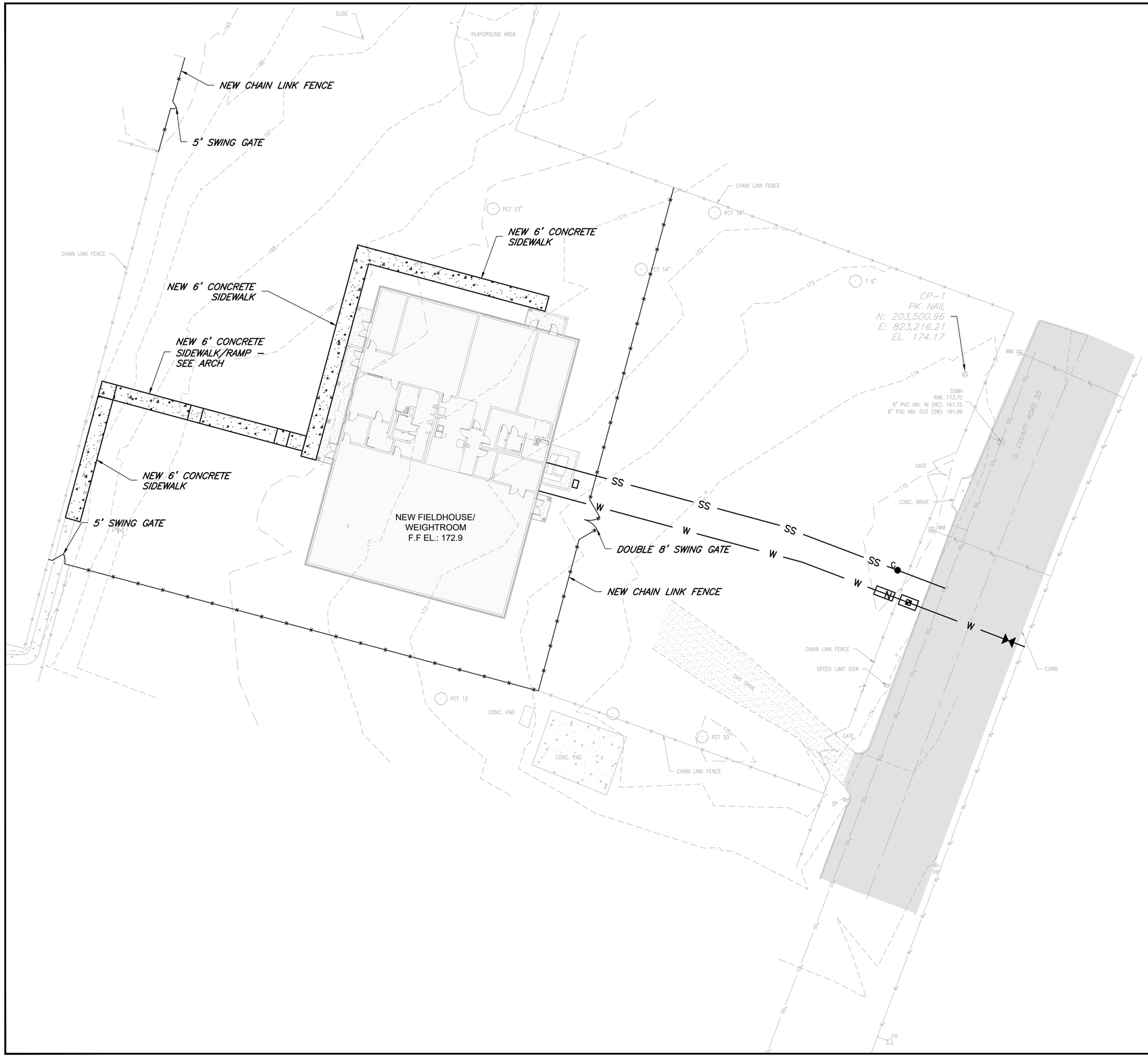

CIVIL LEGEND

	PIV
	BACK FLOW PREVENTER
	WATER METER
	WATER VALVE
	SEWER CLEANOUT
W	WATER MAIN
SS	SANITARY SEWER
	CHAIN-LINK FENCE
375	MAJOR CONTOUR
	MINOR CONTOUR
	CONCRETE

NOTES:

1. CONTRACTOR TO VERIFY LOCATION OF EXISTING UTILITIES BEFORE STARTING WORK.
2. CONTRACTOR SHALL COORDINATE SHUTTING OFF EXISTING UTILITIES WITH THE OWNER, ENGINEER, & UTILITY.
3. ALL VEGETATIVE GROWTH WITH THE CONSTRUCTION FOOTPRINT SHALL BE CLEARED/GRUBBED. CONTRACTOR TO VISIT THE SITE TO DETERMINE THE EXTENT OF WORK.
4. SITE IMPROVEMENTS THAT IMPEDE THE CONSTRUCTION SHALL BE REMOVED (ABOVE AND BELOW GROUND).
5. ALL EXISTING FEATURES NOT SHOWN TO BE DEMOLISHED SHALL REMAIN AND BE PROTECTED BY THE CONTRACTOR FOR THE DURATION OF THE CONTRACT.
6. CONTRACTOR TO INSTALL TEMPORARY CHAIN LINK FENCE, 7' TALL, IN SUFFICIENT QUANTITY TO ENCLOSE THE PROJECT SITE AND PREVENT PEDESTRIANS AND VEHICLES FROM ENTERING THE SITE. FENCE TO BE MAINTAINED FOR THE DURATION OF THE CONTRACT.

N W E S

GRAPHIC SCALE

20' 10' 0 20' 40'

SCALE: 1" = 20'-0"

ALABAMA LICENSED No. 29184 PROFESSIONAL ENGINEER KENNETH L. SANDERS 4/27/22

POLY

Revision	Description	Date

DESIGNED BY: K.L.S.
DRAWN BY: B.J.
DATE: MARCH 2022
ENG / ARCH / SURVEYOR OF RECORD
REGISTRATION No.
Cert. of Auth. No.
AL
FL
GA
ARCHITECT CA-0491
AA-C001053 001118
ENGINEER CA-782
CA-1818 001118

These drawings are copyrighted and the property of Poly-Inc. Any use, partial or full reproduction is prohibited except by written Agreement with Poly-Inc.

POLY, INC.
1935 Headland Avenue
Dothan, AL 36303
334-793-4700
102 Sunset Lane
Shalimar, FL 32579
850-609-1100
2135 University Blvd. Ste. A
Tuscaloosa, AL 35401
205-752-4037
WWW.POLY-INC.COM

NEW COTTONWOOD FIELDHOUSE / WEIGHTROOM BUILDING FOR HOUSTON COUNTY BOARD OF EDUCATION

SITE PLAN

SHEET No.
C1.2

PROJECT No.
26-394.02

BID DOCUMENTS

Poly, Inc. - G:\CLEANSTUFF-15-28\26394 Houston BOE Open End Projects\26394.02 - Cottonwood Fieldhouse\03 - Final Design\CIVIL\01-Plans\26394.02_C1.2_SITE PLAN.dwg [Layout1] Last Printed: April 27, 2022 - 06:47pm By: ksanders

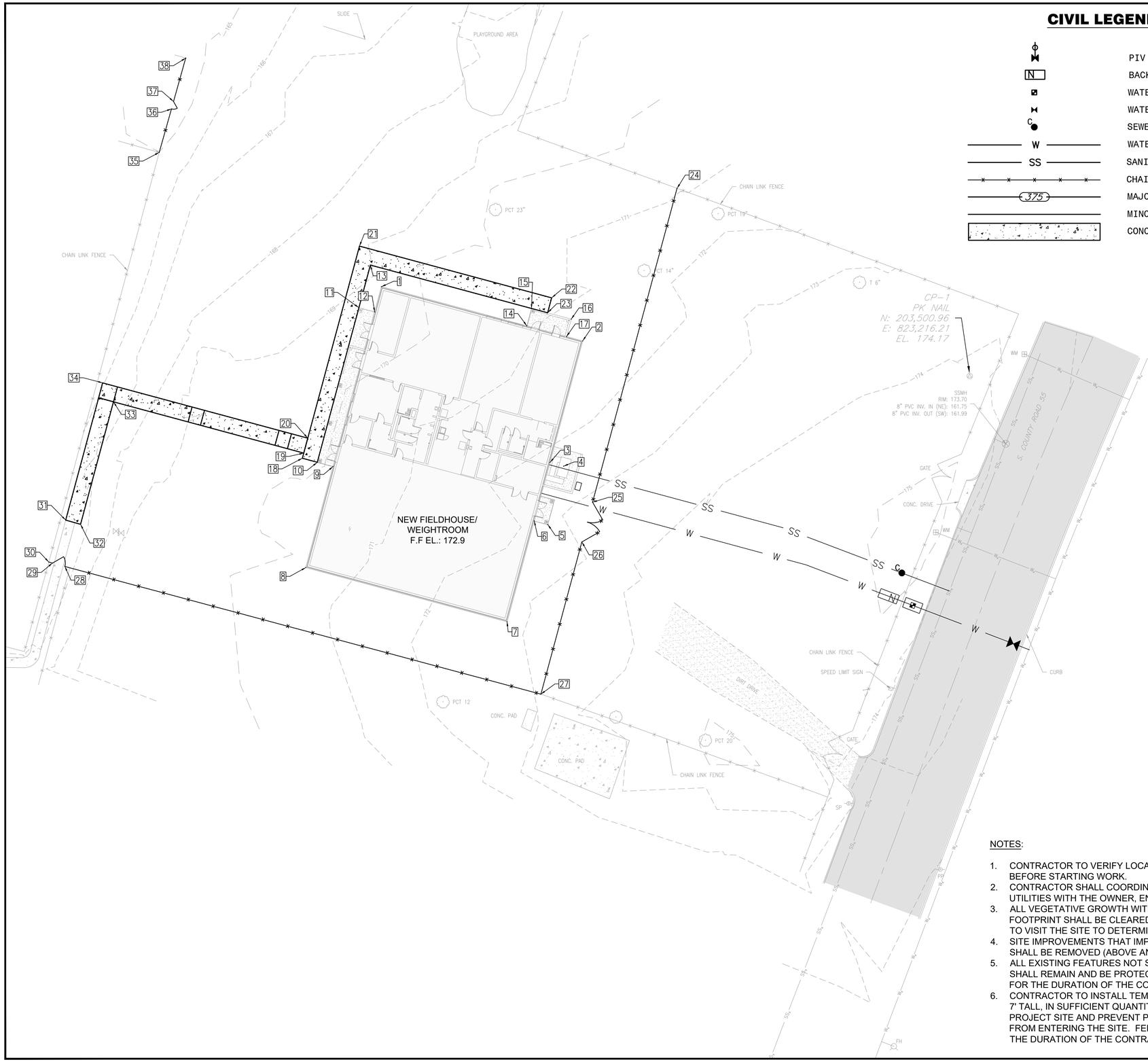

CIVIL LEGEND

	PIV
	BACK FLOW PREVENTER
	WATER METER
	WATER VALVE
	SEWER CLEANOUT
W	WATER MAIN
SS	SANITARY SEWER
	CHAIN-LINK FENCE
375	MAJOR CONTOUR
	MINOR CONTOUR
	CONCRETE

STAKEOUT COORDINATES

Point #	Northing	Easting
1	203535.69	822987.61
2	203514.63	823065.82
3	203467.40	823053.10
4	203465.97	823058.41
5	203443.28	823052.30
6	203444.71	823046.99
7	203405.52	823036.44
8	203426.58	822958.23
9	203465.85	822968.80
10	203467.41	822962.66
11	203527.55	822978.85
12	203525.91	822984.97
13	203544.10	822983.31
14	203520.48	823044.09
15	203527.24	823045.91
16	203523.08	823061.36
17	203516.32	823059.54
18	203469.05	822956.89
19	203471.07	822957.43
20	203476.86	822958.99
21	203551.45	822979.08
22	203531.35	823053.75
23	203525.55	823052.19
24	203573.91	823102.49
25	203451.98	823069.66
26	203436.53	823065.50
27	203377.41	823049.58
28	203427.02	822864.60
29	203428.33	822859.77
30	203428.72	822858.35
31	203445.01	822864.91
32	203443.38	822870.69
33	203490.97	822883.50
34	203498.32	822879.27
35	203587.87	822901.27
36	203604.74	822906.01
37	203607.63	822906.83
38	203624.51	822911.57

NOTES:

1. CONTRACTOR TO VERIFY LOCATION OF EXISTING UTILITIES BEFORE STARTING WORK.
2. CONTRACTOR SHALL COORDINATE SHUTTING OFF EXISTING UTILITIES WITH THE OWNER, ENGINEER, & UTILITY.
3. ALL VEGETATIVE GROWTH WITH THE CONSTRUCTION FOOTPRINT SHALL BE CLEARED/GRUBBED. CONTRACTOR TO VISIT THE SITE TO DETERMINE THE EXTENT OF WORK.
4. SITE IMPROVEMENTS THAT IMPEDE THE CONSTRUCTION SHALL BE REMOVED (ABOVE AND BELOW GROUND).
5. ALL EXISTING FEATURES NOT SHOWN TO BE DEMOLISHED SHALL REMAIN AND BE PROTECTED BY THE CONTRACTOR FOR THE DURATION OF THE CONTRACT.
6. CONTRACTOR TO INSTALL TEMPORARY CHAIN LINK FENCE, 7' TALL, IN SUFFICIENT QUANTITY TO ENCLOSE THE PROJECT SITE AND PREVENT PEDESTRIANS AND VEHICLES FROM ENTERING THE SITE. FENCE TO BE MAINTAINED FOR THE DURATION OF THE CONTRACT.

N
W E
S

GRAPHIC SCALE

20' 10' 0 20' 40'

SCALE: 1" = 20'-0"

ALABAMA LICENSED No. 29184 PROFESSIONAL ENGINEER KENETH L. SANDERS 4/27/22

POLY

Date	Description	Revision

DESIGNED BY: K.L.S.
DRAWN BY: B.J.
DATE: MARCH 2022
ENG / ARCH / SURVEYOR OF RECORD: REGISTRATION No.
Cert. of Auth. No. AL FL GA
ARCHITECT CA-4460 AA-C001051 001118
ENGINEER CA-7836 CA-5818 001118

These drawings are copyrighted and the property of Poly,Inc. Any use, partial or full reproduction is prohibited without written Agreement with Poly,Inc.

POLY, INC.
1935 Headland Avenue
Dothan, AL 35303
334-793-4700
102 Sunset Lane 2135 University Blvd. Ste. A
Shalimar, FL 32579 Tuscaloosa, AL 35401
850-609-1100 205-752-4037
WWW.POLY-INC.COM

NEW COTTONWOOD FIELDHOUSE / WEIGHTROOM BUILDING FOR
HOUSTON COUNTY BOARD OF EDUCATION

STAKEOUT PLAN

SHEET No.
C1.3

PROJECT No.
26-394.02

BID DOCUMENTS

Poly, Inc. - G:\CLEANSTUFF-15-28\26394 Houston BOE Open End Projects\26394.02 - Cottonwood Fieldhouse\03 - Final Design\CIVIL\01-Plans\26394.02_C1.3_STAKEOUT PLAN.dwg [Layout1] Last Printed: April 27, 2022 - 06:48pm By: ksanders

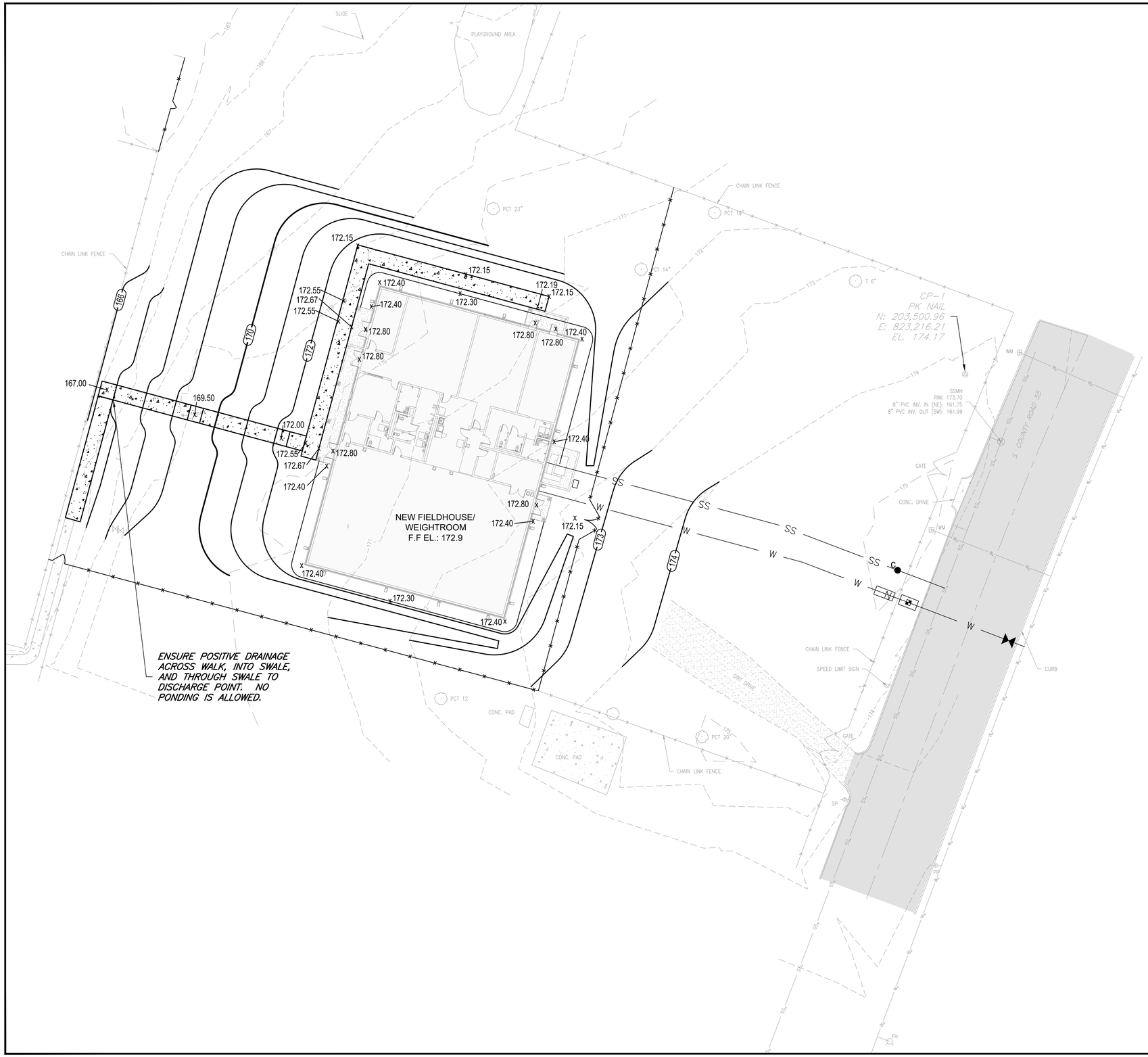

CIVIL LEGEND

	PIV
N	BACK FLOW PREVENTER
	WATER METER
	WATER VALVE
C	SEWER CLEANOUT
W	WATER MAIN
SS	SANITARY SEWER
	CHAIN-LINK FENCE
375	MAJOR CONTOUR
	MINOR CONTOUR
	CONCRETE

NOTES:

1. CONTRACTOR TO VERIFY LOCATION OF EXISTING UTILITIES BEFORE STARTING WORK.
2. CONTRACTOR SHALL COORDINATE SHUTTING OFF EXISTING UTILITIES WITH THE OWNER, ENGINEER, & UTILITY.
3. ALL VEGETATIVE GROWTH WITH THE CONSTRUCTION FOOTPRINT SHALL BE CLEARED/GRUBBED. CONTRACTOR TO VISIT THE SITE TO DETERMINE THE EXTENT OF WORK.
4. SITE IMPROVEMENTS THAT IMPEDE THE CONSTRUCTION SHALL BE REMOVED (ABOVE AND BELOW GROUND).
5. ALL EXISTING FEATURES NOT SHOWN TO BE DEMOLISHED SHALL REMAIN AND BE PROTECTED BY THE CONTRACTOR FOR THE DURATION OF THE CONTRACT.
6. CONTRACTOR TO INSTALL TEMPORARY CHAIN LINK FENCE, 7' TALL, IN SUFFICIENT QUANTITY TO ENCLOSE THE PROJECT SITE AND PREVENT PEDESTRIANS AND VEHICLES FROM ENTERING THE SITE. FENCE TO BE MAINTAINED FOR THE DURATION OF THE CONTRACT.
7. EXISTING UTILITY LINES THAT HAVE BEEN ABANDONED THAT ARE DISTURBED DUE TO CONSTRUCTION SHALL BE CUT AND PLUGGED.
8. ALL SIDEWALKS AND RAMPS ARE TO BE ADA COMPLIANT. MAXIMUM CROSS SLOPE IS 2%. MAXIMUM RUNNING SLOPE IS 8.33%.

N
W E
S

GRAPHIC SCALE

20' 10' 0 20' 40'

SCALE: 1" = 20'-0"

ALABAMA LICENSED 4/27/22 No. 29184 PROFESSIONAL ENGINEER KENNETH L. SANDERS

POLY

Revision	Description	Date

DESIGNED BY: K.L.S.
DRAWN BY: B.J.
DATE: MARCH 2022
ENG / ARCH / SURVEYOR OF RECORD | REGISTRATION No.
Cert. of Auth. No. | AL | FL | GA.
ARCHITECT | CA-0A680 | AA-C001003 | 001116
ENGINEER | CA-7182 | CA-1818 | 001118

These drawings are copyrighted and the property of Poly-Inc. Any use, partial or full reproduction is prohibited except by written Agreement with Poly-Inc.

POLY, INC.
1935 Headland Avenue
Dothan, AL 36303
334-793-4700
102 Sunset Lane 2135 University Blvd. Ste. A
Shalimar, FL 32579 Tuscaloosa, AL 35401
850-609-1100 205-752-4037
WWW.POLY-INC.COM

NEW COTTONWOOD FIELDHOUSE / WEIGHTROOM BUILDING FOR HOUSTON COUNTY BOARD OF EDUCATION

GRADING PLAN

SHEET No.
C1.4

PROJECT No.
26-394.02

BID DOCUMENTS

Poly, Inc. - G:\CLEANSTUFF-15-28\26394 Houston BOE Open End Projects\26394.02 - Cottonwood Fieldhouse\03 - Final Design\CIVIL\01-Plans\26394.02_C1.4_GRADING PLAN.dwg [Layout1] Last Printed: April 27, 2022 - 06:48pm By: ksanders

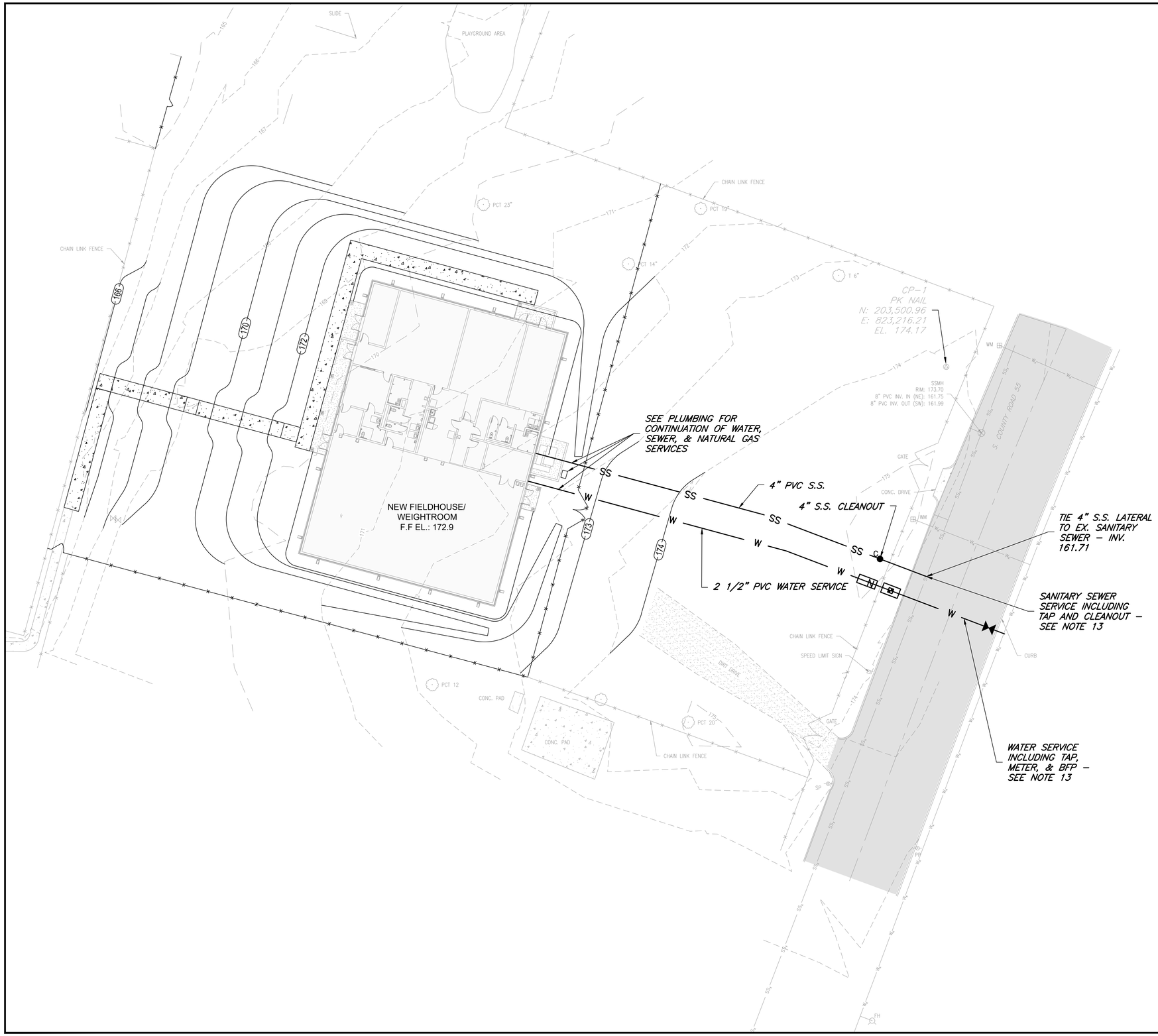

CIVIL LEGEND

	PIV
	BACK FLOW PREVENTER
	WATER METER
	WATER VALVE
	SEWER CLEANOUT
W	WATER MAIN
SS	SANITARY SEWER
	CHAIN-LINK FENCE
375	MAJOR CONTOUR
	MINOR CONTOUR
	CONCRETE

NOTES:

1. CONTRACTOR TO VERIFY LOCATION OF EXISTING UTILITIES BEFORE STARTING WORK.
2. CONTRACTOR SHALL COORDINATE SHUTTING OFF EXISTING UTILITIES WITH THE OWNER, ENGINEER, & UTILITY.
3. ALL VEGETATIVE GROWTH WITH THE CONSTRUCTION FOOTPRINT SHALL BE CLEARED/GRUBBED. CONTRACTOR TO VISIT THE SITE TO DETERMINE THE EXTENT OF WORK.
4. SITE IMPROVEMENTS THAT IMPEDE THE CONSTRUCTION SHALL BE REMOVED (ABOVE AND BELOW GROUND).
5. ALL EXISTING FEATURES NOT SHOWN TO BE DEMOLISHED SHALL REMAIN AND BE PROTECTED BY THE CONTRACTOR FOR THE DURATION OF THE CONTRACT.
6. CONTRACTOR TO INSTALL TEMPORARY CHAIN LINK FENCE, 7' TALL, IN SUFFICIENT QUANTITY TO ENCLOSE THE PROJECT SITE AND PREVENT PEDESTRIANS AND VEHICLES FROM ENTERING THE SITE. FENCE TO BE MAINTAINED FOR THE DURATION OF THE CONTRACT.
7. EXISTING UTILITY LINES THAT HAVE BEEN ABANDONED THAT ARE DISTURBED DUE TO CONSTRUCTION SHALL BE CUT AND PLUGGED.
8. NEW WATER MAINS SHALL BE ROUTED AROUND OR UNDER EXITING UTILITIES AS REQUIRED.
9. MEGALUG JOINT RESTRAINT TO BE PROVIDED AT ALL PRESSURE FITTINGS.
10. CONCRETE BLOCKING TO BE INSTALLED AT ALL FITTINGS, HOT TAPS, ETC. ON PRESSURE LINES.
11. MAINTAIN 18-INCH VERTICAL SEPARATION IN-BETWEEN NEW AND EXISTING UTILITIES.
12. COORDINATE TIE-IN LOCATION AND DEPTHS OF NEW UTILITIES WITH PLUMBING.
13. WATER AND SEWER UTILITY WORK FROM THE UTILITY TO THE ROW INCLUDING WATER TAP, METER, BACKFLOW PREVENTER, AND SEWER TAP WILL BE INSTALLED BY BILL-MAR CONSTRUCTION LLC AS A SUBCONTRACTOR TO THE PRIME CONTRACTOR. CONTACT BILLY HELMS OR JASON HELMS AT 334-726-5798 OR 334-726-2718.

N
W E
S

GRAPHIC SCALE

20' 10' 0 20' 40'

SCALE: 1" = 20'-0"

ALABAMA LICENSED 4/27/22 No. 29184 PROFESSIONAL ENGINEER KENETH L. SANDERS

POLY

Revision	Description	Date

DATE: MARCH 2022

DRAWN BY: B.J.

DESIGNED BY: K.L.S.

ENG / ARCH / SURVEYOR OF RECORD: REGISTRATION No.

Cert. of Auth. No.	FL	GA
ARCHITECT	CA-6460	AA-C000551
ENGINEER	CA-7842	CA-1818

These drawings are copyrighted and the property of Poly-Inc. Any use, partial or full reproduction is prohibited without written Agreement with Poly-Inc.

POLY, INC.
1935 Headland Avenue
Dothan, AL 36303
334-793-4700
102 Sunset Lane
Shalimar, FL 32579
850-609-1100
2135 University Blvd. Ste. A
Tuscaloosa, AL 35401
205-752-4037
WWW.POLY-INC.COM

NEW COTTONWOOD FIELDHOUSE / WEIGHTROOM BUILDING FOR
HOUSTON COUNTY BOARD OF EDUCATION

UTILITY PLAN

SHEET No.
C1.5

PROJECT No.
26-394.02

BID DOCUMENTS

Poly, Inc. - G:\CLEANSTUFF-15-28\26394 Houston BOE Open End Projects\26394.02 - Cottonwood Fieldhouse\03 - Final Design\CIVIL\01-Plans\26394.02_C1.5_UTILITY PLAN.dwg [Layout1] Last Printed: April 27, 2022 - 06:50pm By: ksanders

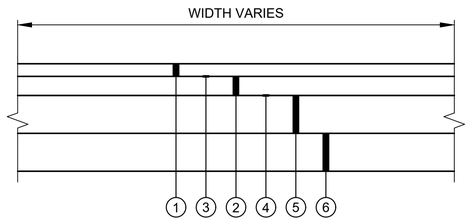

ASPHALT PAVING SECTION

N.T.S.

MATERIALS LEGEND

1. ALDOT 424A-341 BITUMINOUS WEARING SURFACE (165 LB/SY)
2. ALDOT 424B-635 BITUMINOUS UPPER BINDER (350 LB/SY)
3. ALDOT 405A-000 BITUMINOUS TACK COAT (0.10 GAL/SY)
4. ALDOT SECTION 401A-000 BITUMINOUS TREATMENT A (PRIME COAT) (0.25 GAL/SY)
5. 6" ALDOT 301A-012 CRUSHED AGGREGATE BASE COURSE (100% ASTM D 1557) OR
6. 6" ALDOT 230A-000 ROADBED PROCESSING (100% ASTM D 698)

NOTES:

1. ALL BITUMINOUS PAVEMENTS SHALL BE DESIGNED ON THE FINE SIDE OF THE RESTRICTED ZONE TO REDUCE THE PERMEABILITY OF THE PAVEMENT.

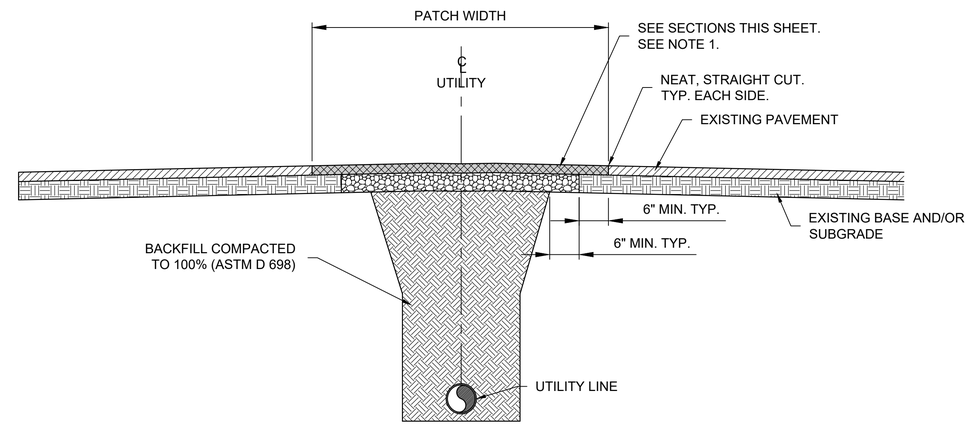

TYPICAL PAVING REPLACEMENT SECTION (REMOVE/REPLACE)

N.T.S.

NOTES:

1. REMOVE EXISTING PAVEMENT AT UTILITY LINE CROSSINGS AND REPLACE WITH LIKE-KIND MATERIAL (EITHER ASPHALT OR CONCRETE) PER THE PAVING SECTIONS ON THIS SHEET.

ALABAMA LICENSED 4/27/22 No. 29184 PROFESSIONAL ENGINEER KENNETH L. SANDERS

POLY

Revision	Description	Date

DATE: MARCH 2022

DRAWN BY: B.J.

DESIGNED BY: K.L.S.

ENG / ARCH / SURVEYOR OF RECORD:	REGISTRATION No.
Cert. of Auth. No.	FL GA
ARCHITECT	CA-3460 AA-C000551 001118
ENGINEER	CA-78-E CA-1918 001118

Those drawings are copyrighted and the property of Poly-Inc. Any use, partial or full reproduction is prohibited without the written Agreement with Poly-Inc.

POLY, INC.
1935 Headland Avenue
Dothan, AL 36303
334-793-4700
102 Sunset Lane 2135 University Blvd. Ste. A
Shalimar, FL 32579 Tuscaloosa, AL 35401
850-609-1100 205-752-4037
WWW.POLY-INC.COM

NEW COTTONWOOD FIELDHOUSE / WEIGHTROOM BUILDING FOR HOUSTON COUNTY BOARD OF EDUCATION

PAVING DETAILS

SHEET No.
C5.0

PROJECT No.
26-394.02

BID DOCUMENTS

Poly, Inc. - G:\CLEANSTUFF-15-28\26394 Houston BOE Open End Projects\26394.02 - Cottonwood Fieldhouse\03 - Final Design\CIVIL\05-Details\26394.02_C5.0 PAVING DETAILS.dwg [LAYOUT] Last Printed: April 27, 2022 - 06:20pm By: ksanders

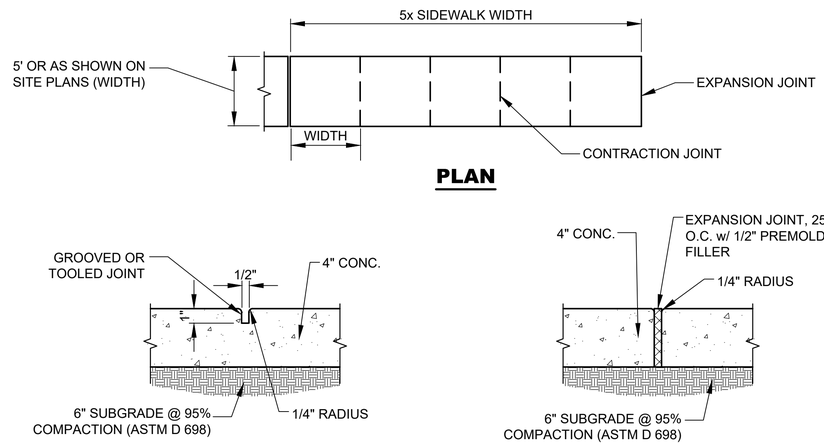

CONCRETE SIDEWALK

N.T.S.

ALABAMA LICENSED No. 29184 PROFESSIONAL ENGINEER KENNETH L. SANDERS
4/27/22

POLY

Revision	Description	Date

DESIGNED BY: K.L.S.
DRAWN BY: B.J.
DATE: MARCH 2022

ENG / ARCH / SURVEYOR OF RECORD		REGISTRATION No.
Cert. of Auth. No.	FL	GA
ARCHITECT	CA-0480	AA-C001053 001118
ENGINEER	CA-7826	CA-1818 001118

These drawings are copyrighted and the property of Poly-Inc. Any use, partial or full reproduction is prohibited except by written Agreement with Poly-Inc.

POLY, INC.
1935 Headland Avenue
Dothan, AL 36303
334-793-4700
102 Sunset Lane Shalimar, FL 32579 850-609-1100
2135 University Blvd. Ste. A Tuscaloosa, AL 35401 205-752-4037
WWW.POLY-INC.COM

NEW COTTONWOOD FIELDHOUSE / WEIGHTROOM BUILDING FOR HOUSTON COUNTY BOARD OF EDUCATION

PAVING DETAILS

SHEET No.
C5.1

PROJECT No.
26-394.02

BID DOCUMENTS

Poly, Inc. - G:\CLEANSTUFF-15-28\26394 Houston BOE Open End Projects\26394.02 - Cottonwood Fieldhouse\03 - Final Design\CIVIL\05-Details\26394.02_C5.1 PAVING DETAILS.dwg [Layout1] Last Printed: April 27, 2022 - 06:21pm By: ksanders

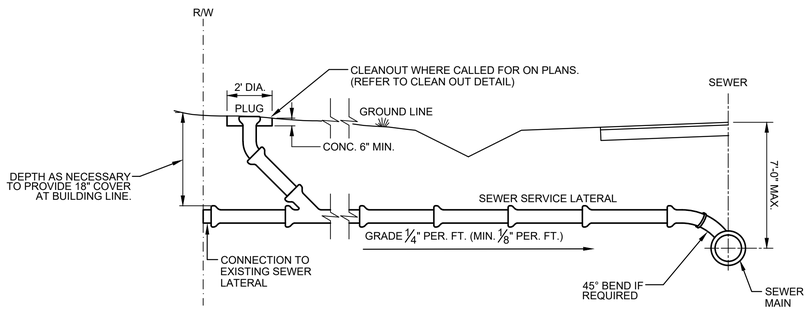

ELEVATION

STANDARD SANITARY SEWER SERVICE LATERAL

N.T.S.

NOTES:

1. FULL LENGTH OF SEWER SERVICE TRENCH SHALL BE COMPACTED IN 6" LIFTS.
2. ALL SERVICE LINE SHALL BE AT A MINIMUM 4" SDR-35 PVC.
3. BEDDING AND BACKFILL MATERIAL TO BE CLASS I STONE IF UNDER ASHPALT OR SATISFACTORY BACKFILL MATERIAL IF LOCATED IN UNPAVED AREAS.
4. SERVICE CONNECTIONS SHALL BE MADE AT THE TOP OR FROM THE SIDE AT 45° OF THE SEWER MAIN.

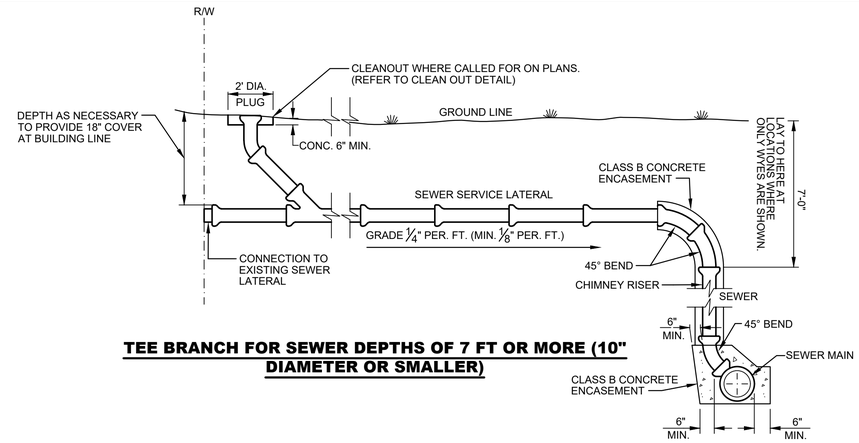

TEE BRANCH FOR SEWER DEPTHS OF 7 FT OR MORE (10" DIAMETER OR SMALLER)

DEEP SANITARY SEWER SERVICE LATERAL

N.T.S.

NOTES:

1. FULL LENGTH OF SEWER SERVICE TRENCH SHALL BE COMPACTED IN 6" LIFTS.
2. ALL SERVICE LINE SHALL BE AT A MINIMUM 4" SDR-35 PVC.
3. BEDDING AND BACKFILL MATERIAL TO BE CLASS I STONE IF UNDER ASHPALT OR SATISFACTORY BACKFILL MATERIAL IF LOCATED IN UNPAVED AREAS.
4. SERVICE CONNECTIONS SHALL BE MADE AT THE TOP OR FROM THE SIDE AT 45° OF THE SEWER MAIN.

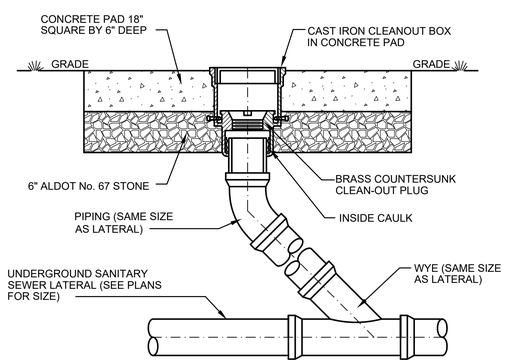

SANITARY SEWER SERVICE LATERAL CLEANOUT

N.T.S.

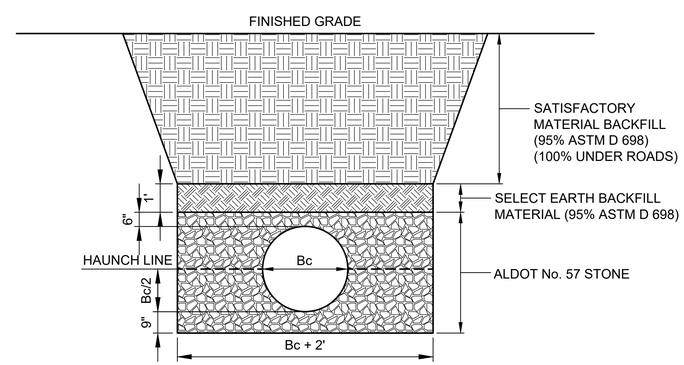

SEWER TRENCH (PVC)

NOTES:

1. CONSTRUCTION OF TRENCHES SHALL COMPLY WITH ALL FEDERAL, STATE, AND LOCAL SAFETY AND HEALTH REGULATIONS WHICH HAVE JURISDICTION AT THE PROJECT SITE. IT IS THE CONTRACTOR'S RESPONSIBILITY TO BE FAMILIAR WITH THE APPLICABLE REGULATIONS AND FOLLOW THEM ACCORDINGLY.

ALABAMA LICENSED 4/27/22 No. 29184 PROFESSIONAL ENGINEER KENNETH L. SANDERS

POLY

Revision	Description	Date

DESIGNED BY: K.L.S.
DRAWN BY: B.J.
DATE: MARCH 2022
ENG / ARCH / SURVEYOR OF RECORD | REGISTRATION No.
Cert. of Auth. No. | FL | GA
ARCHITECT | CA-0480 | AA-C000363 | 001118 | 001118
ENGINEER | CA-1816 | CA-1816 | 001118

These drawings are copyrighted and the property of Poly-Inc. Any use, partial or full reproduction is prohibited without written Agreement with Poly-Inc.

POLY, INC.
1935 Headland Avenue
Dothan, AL 36303
334-793-4700
102 Sunset Lane
Shalimar, FL 32579
850-609-1100
2135 University Blvd. Ste. A
Tuscaloosa, AL 35401
205-752-4037
WWW.POLY-INC.COM

NEW COTTONWOOD FIELDHOUSE / WEIGHTROOM BUILDING FOR
HOUSTON COUNTY BOARD OF EDUCATION

SANITARY SEWER DETAILS

SHEET No.
C5.2
PROJECT No.
26-394.02

BID DOCUMENTS

Poly, Inc. - G:\CLEANSTUFF-15-28\26394 Houston BOE Open End Projects\26394.02 - Cottonwood Fieldhouse\03 - Final Design\CIV\L05-Details\26394.02_C5.2 SEWER DETAILS.dwg [LAYOUT] Last Printed: April 27, 2022 - 06:21pm By: ksanders

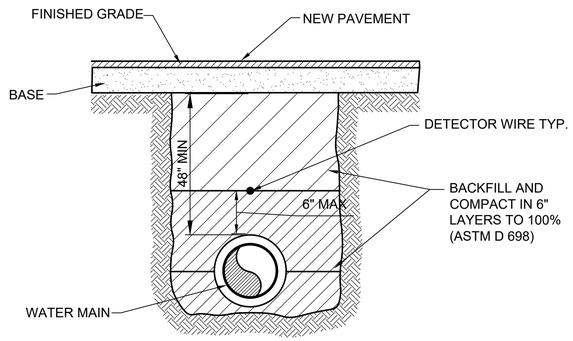

WATER MAIN TRENCH (PAVED AREAS)

N.T.S.

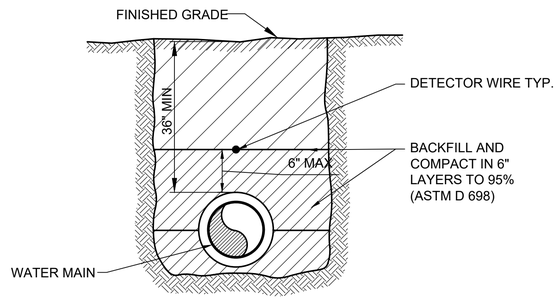

WATER MAIN TRENCH (UNPAVED AREAS)

N.T.S.

LEGEND

- INITIAL BACKFILL
- FINAL BACKFILL

NOTES:

1. WIDTH OF TRENCH AT ANY POINT BELOW 6" ABOVE THE TOP OF THE PIPE SHALL BE SUFFICIENT TO PROVIDE ADEQUATE ROOM FOR JOINING THE PIPE AND FILLING AND COMPACTING THE SIDE FILLS. HOWEVER, IN NO CASE SHALL THIS WIDTH EXCEED THE OUTSIDE PIPE DIAMETER PLUS 2 FEET.
2. TRENCH EXCAVATION FROM 6" ABOVE THE TOP OF THE PIPE SHALL BE AS WIDE AS NECESSARY EXCEPT AS RESTRICTED BY THE LIMITS OF RIGHT-OF-WAY OR EASEMENT AND AS REQUIRED TO PROTECT EXISTING STRUCTURES AND CONDUITS.
3. INITIAL BACKFILL - GENERALLY, MATERIAL OBTAINED FROM THE TRENCH EXCAVATION. SOIL TYPES OF HIGHLY ORGANIC SOILS OR HIGHLY PLASTIC EXPANSIVE CLAYS SHALL NOT BE USED. INITIAL BACKFILL SHALL BE COMPACTED TO UNIFORMLY DEVELOP LATERAL SOIL FORCES DURING THE BACKFILL OPERATION.
4. FINAL BACKFILL - GENERALLY, MATERIAL OBTAINED FROM THE TRENCH EXCAVATION WITH MAXIMUM SIZE OF STONE NOT TO EXCEED 6 INCHES.
5. ALL WATER MAINS SHALL HAVE DETECTOR WIRE INSTALLED OVER PIPE.

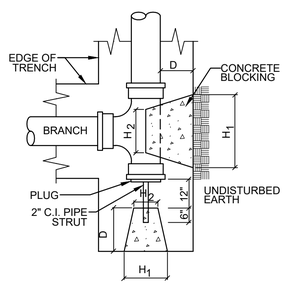

TEES, CROSSES & PLUGS

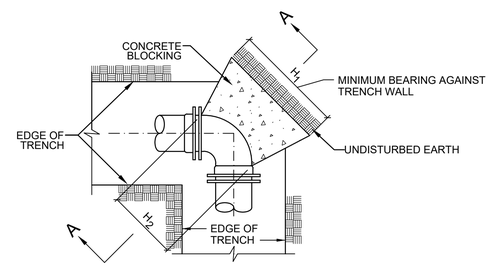

HORIZONTAL BENDS

TABLE OF DIMENSIONS FOR CONCRETE BLOCKING																												
SIZE	TEES,PLUGS & CROSSES				90° BENDS					45° BENDS					22½° BENDS					1 1¼° BENDS					SIZE
PIPE	H_1	H_2	V	D	CU. FT.	H_1	H_2	V	D	CU. FT.	H_1	H_2	V	D	CU. FT.	H_1	H_2	V	D	CU. FT.	H_1	H_2	V	D	CU. FT.	PIPE
2" & 2½"	18"	10"	12"	18"	1.9	18"	10"	12"	18"	1.9	18"	6"	12"	18"	1.5	18"	6"	12"	18"	1.5	18"	6"	12"	18"	1.5	2" & 2½"
3" & 4"	24"	12"	12"	18"	2.3	24"	12"	12"	18"	2.3	18"	8"	12"	18"	1.6	18"	8"	12"	18"	1.6	18"	8"	12"	18"	1.6	3" & 4"
6"	24"	16"	18"	18"	3.5	30"	16"	18"	18"	4.1	24"	10"	16"	18"	3.2	24"	10"	16"	18"	3.2	24"	10"	16"	18"	3.2	6"
8"	36"	18"	18"	18"	5.1	39"	18"	24"	18"	7.3	30"	11"	18"	18"	4.0	24"	11"	18"	18"	3.5	24"	11"	16"	18"	3.4	8"
10"	48"	24"	18"	24"	7.2	54"	32"	24"	18"	10.3	24"	18"	21"	18"	4.6	24"	18"	21"	18"	4.6	24"	18"	21"	18"	4.6	10"
12"	54"	30"	24"	24"	13.4	54"	32"	36"	24"	18.2	42"	18"	24"	24"	9.6	24"	18"	24"	24"	6.6	24"	18"	21"	24"	6.1	12"
14"	60"	32"	30"	24"	17.9	60"	40"	42"	24"	25.0	44"	24"	30"	24"	13.2	30"	24"	24"	24"	9.2	27"	21"	24"	24"	7.9	14"
16"	66"	34"	36"	24"	22.5	69"	48"	48"	24"	29.0	48"	30"	36"	24"	17.0	36"	30"	27"	24"	11.8	27"	24"	27"	24"	9.1	16"
18"	72"	36"	40"	24"	30.0	72"	48"	60"	24"	38.0	48"	30"	42"	24"	21.0	42"	30"	30"	24"	15.0	30"	30"	36"	24"	13.0	18"
20"	84"	38"	42"	24"	36.0	84"	48"	66"	24"	48.0	54"	40"	46"	24"	27.0	48"	36"	36"	24"	19.0	42"	40"	36"	24"	18.0	20"
24"	108"	42"	48"	24"	45.0	108"	60"	72"	24"	68.0	60"	48"	56"	24"	41.0	54"	42"	42"	24"	25.0	48"	42"	42"	24"	23.0	24"
30"	132"	52"	60"	24"	70.0	132"	72"	92"	24"	104.0	72"	48"	76"	24"	58.0	60"	48"	48"	24"	32.0	54"	48"	54"	24"	32.0	30"
36"	162"	58"	72"	24"	100.0	162"	96"	108"	24"	150.0	84"	72"	84"	24"	85.0	66"	72"	60"	24"	50.0	60"	48"	60"	24"	40.0	36"

NOTE: DIMENSIONS ARE CONTROLLED BY DIAMETER OF BRANCH MAIN.

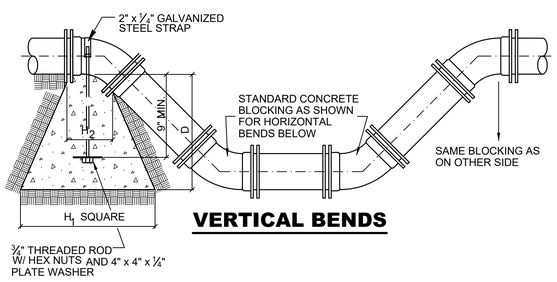

VERTICAL BENDS

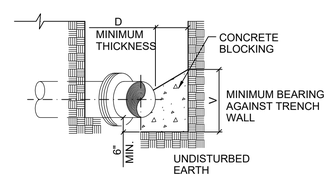

SECTION "A-A"

CONCRETE THRUST BLOCK

N.T.S.

ALABAMA LICENSED 4/27/22 No. 29184 PROFESSIONAL ENGINEER KENNETH L. SANDERS

POLY

Revision	Description	Date

DATE: MARCH 2022

DRAWN BY: B.J.

DESIGNED BY: K.L.S.

ENG / ARCH / SURVEYOR OF RECORD: REGISTRATION No.

Cert. of Auth. No.			
ARCHITECT	CA-0460	FL	CA
ENGINEER	CA-78-E	AA-C001051	001118
			001118
		CA-1818	001118

Those drawings are copyrighted as the property of Poly-Inc. Any use, partial or full reproduction is prohibited without written Agreement with Poly-Inc.

POLY, INC.
1935 Headland Avenue
Dothan, AL 36303
334-793-4700
102 Sunset Lane 2135 University Blvd. Ste. A
Shalimar, FL 32579 Tuscaloosa, AL 35401
850-609-1100 205-752-4037
WWW.POLY-INC.COM

NEW COTTONWOOD FIELDHOUSE / WEIGHTROOM BUILDING FOR HOUSTON COUNTY BOARD OF EDUCATION

WATER DETAILS

SHEET No.
C5.3

PROJECT No.
26-394.02

BID DOCUMENTS

Poly, Inc. - G:\CLEANSTUFF-15-28\26394 Houston BOE Open End Projects\26394.02 - Cottonwood Fieldhouse\03 - Final Design\CIVIL\05-Details\26394.02_C5.3 WATER DETAILS.dwg [LAYOUT] Last Printed: April 27, 2022 - 06:22pm By: ksanders

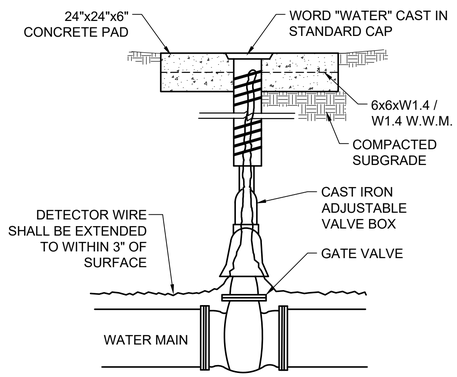

GATE VALVE & BOX

N.T.S.

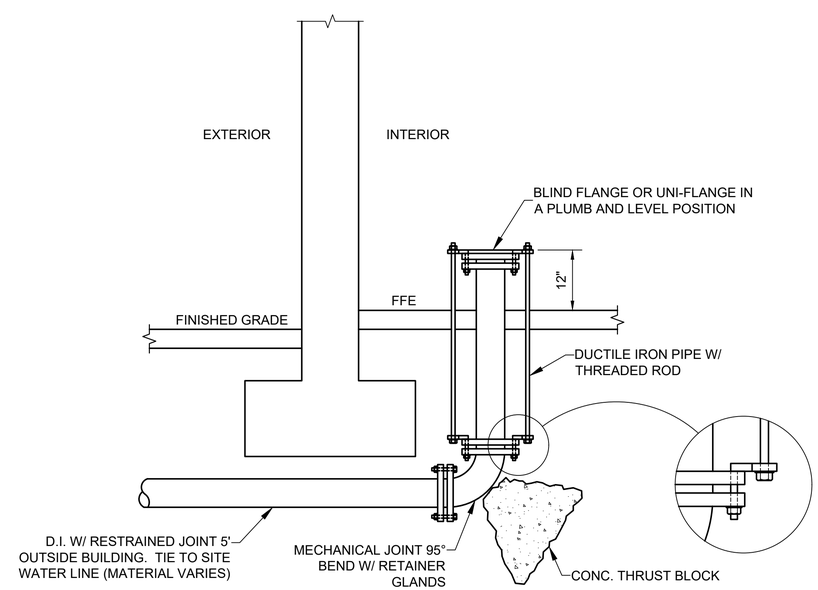

POTABLE/FIRE RISER

N.T.S.

ALABAMA LICENSED 4/27/22 No. 29184 PROFESSIONAL ENGINEER KENNETH L. SANDERS

POLY

Revision	Description	Date

DESIGNED BY: K.L.S.
DRAWN BY: B.J.
DATE: MARCH 2022

ENG / ARCH / SURVEYOR OF RECORD:	Cert. of Auth. No.	REGISTRATION No.
ARCHITECT	GA-0480	AA-C001051 | 001118
ENGINEER	GA-78-E	GA-1818 | 001118

These drawings are copyrighted as the property of Poly-Inc. Any use, partial or full reproduction is prohibited except by written permission with Poly-Inc. Agreement with Poly-Inc.

POLY, INC.
1935 Headland Avenue
Dothan, AL 36303
334-793-4700
102 Sunset Lane
Shallmar, FL 32579
850-609-1100
2135 University Blvd. Ste. A
Tuscaloosa, AL 35401
205-752-4037
WWW.POLY-INC.COM

NEW COTTONWOOD FIELDHOUSE / WEIGHTROOM BUILDING FOR
HOUSTON COUNTY BOARD OF EDUCATION

WATER DETAILS

SHEET No.
C5.4

PROJECT No.
26-394.02

BID DOCUMENTS

Poly, Inc. - G:\CLEANSTUFF-15-28\26394 Houston BOE Open End Projects\26394.02 - Cottonwood Fieldhouse\03 - Final Design\CIVIL\05-Details\26394.02_C5.4 WATER DETAILS.dwg [LAYOUT] Last Printed: April 27, 2022 - 06:23pm By: ksanders

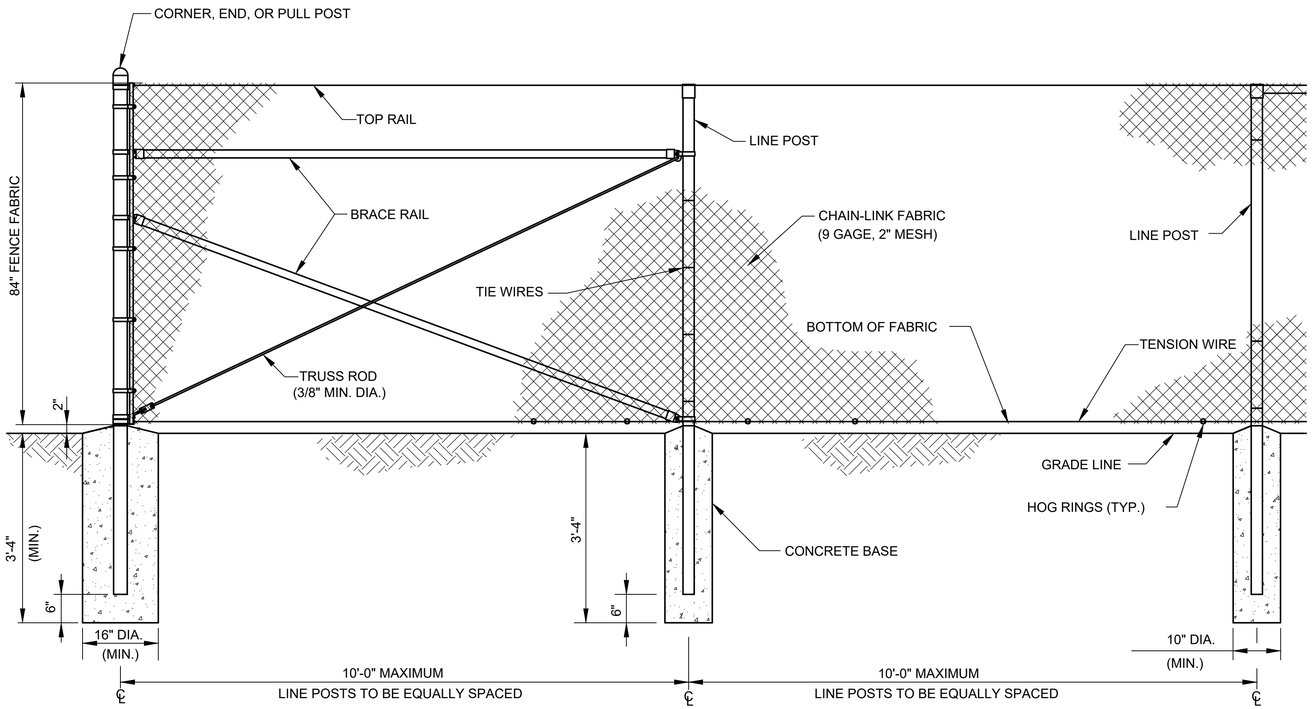

CHAIN-LINK FENCE

N.T.S.
FE6-TWB-84

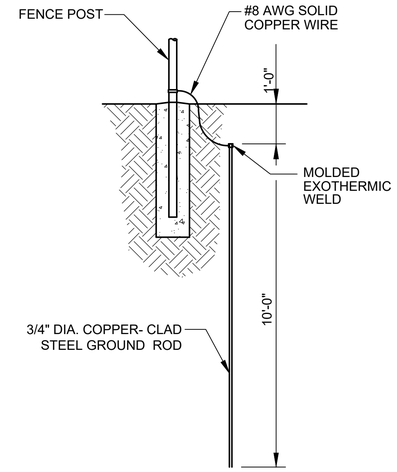

GROUNDING DETAIL

N.T.S.

NOTES :

1. WIRE TIES, RAILS, POSTS, AND BRACES SHALL BE CONSTRUCTED ON THE SECURE SIDE OF THE FENCE ALIGNMENT. CHAIN-LINK FABRIC SHALL BE PLACED ON THE OPPOSITE SIDE OF THE SECURE AREA.
2. UNLESS SPECIFICALLY SHOWN OR SPECIFIED, ALL FE6 FENCE SHALL HAVE APRON EXTENDED OUTWARD FROM THE AREA BEING PROTECTED.
3. POSTS SHALL BE INSTALLED SO THAT THE VOID INSIDE THE POST IS COMPLETELY FILLED WITH CONCRETE UP TO THE TOP OF THE FOUNDATION.
4. FENCE SHALL BE TYPE FE5-TR-84.
5. SEE SPECS FOR REQUIRED LOCATIONS FOR GROUNDING.

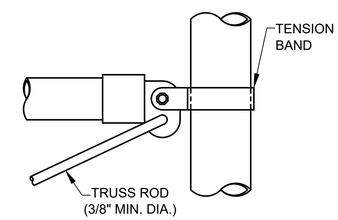

ROUND POST

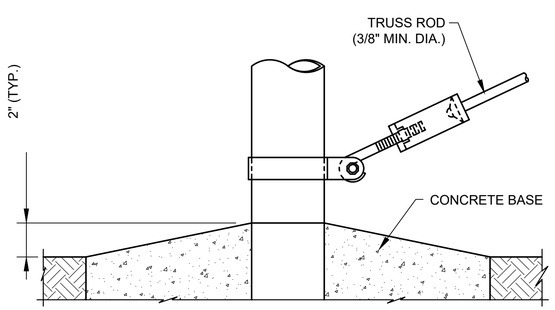

TRUSS ROD AND BAND

N.T.S.

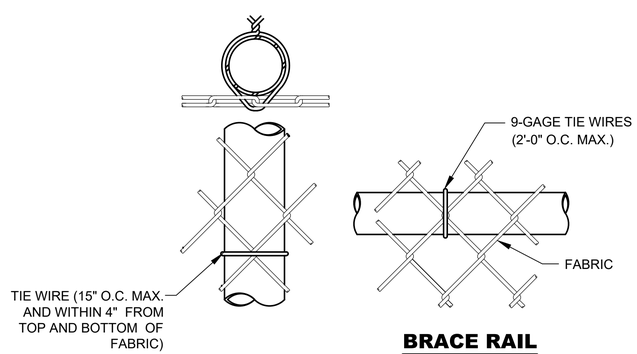

ROUND POST

BRACE RAIL ATTACHMENT

LINE POST ATTACHMENTS

N.T.S.

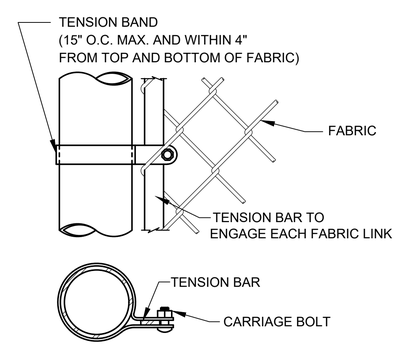

END OR GATE POST DETAIL

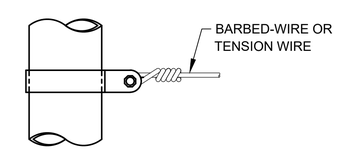

TENSION BAND DETAIL

FASTENING DETAILS

N.T.S.

LEGEND:

- FE5 - CHAIN-LINK FENCE W/O BARBED WIRE APRON
- TR - TOP RAIL AND TENSION WIRE AT BOTTOM
- FINAL NUMBER IS FABRIC WIDTH IN INCHES

ALABAMA LICENSED 4/27/22 No. 29184 PROFESSIONAL ENGINEER KENNETH L. SANDERS

POLY

Revision	Description	Date

DESIGNED BY: KLS
DRAWN BY: BJ
DATE: MARCH 2022
ENG / ARCH / SURVEYOR OF RECORD: REGISTRATION No.
Cert. of Auth. No. AL FL GA
ARCHITECT OA-0480 AA-C001051 001118
ENGINEER OA-7836 OA-1838 001118

These drawings are copyrighted and the property of Poly-Inc. Any use, partial or full reproduction is prohibited without written permission from Poly-Inc. Agreement with Poly-Inc.

POLY, INC.
1935 Headland Avenue
Dothan, AL 36303
334-793-4700
102 Sunset Lane 2135 University Blvd. Ste. A
Shallmar, FL 32579 Tuscaloosa, AL 35401
850-609-1100 205-752-4037
WWW.POLY-INC.COM

NEW COTTONWOOD FIELDHOUSE / WEIGHTROOM BUILDING FOR
HOUSTON COUNTY BOARD OF EDUCATION

CHAIN-LINK FENCE DETAILS

SHEET No.
C5.6
PROJECT No.
26-394.02

BID DOCUMENTS

Poly, Inc. - G:\CLEANSTUFF-15-28\26394 Houston BOE Open End Projects\26394.02 - Cottonwood Fieldhouse\03 - Final Design\CIVIL\05-Details\26394.02_C5.6 FENCE DETAILS.dwg [LAYOUT] Last Printed: April 27, 2022 - 06:25pm By: ksanders

STEEL POST SCHEDULE	
USE AND SECTION	MIN OUTSIDE DIMENSIONS (NOMINAL)
	FABRIC WIDTH 84"
CORNER, END & PULL POSTS	
TUBULAR - ROUND	2 7/8" O.D.
TUBULAR - SQUARE	2 1/2" SQ.
C-SECTION (ROLL-FORMED)	3 1/2" x 3 1/2"
LINE POSTS	
TUBULAR - ROUND	2 3/8" O.D.
H-SECTION	2 1/4" x 1 23/32"
C-SECTION (ROLL-FORMED)	2 1/4" x 1 23/32"
TOP, BOTTOM & BRACE RAILS	
TUBULAR - ROUND	1 21/32" O.D.
TUBULAR - SQUARE	1 1/2" SQ.
H-SECTION	1 5/8" x 1 1/2"
C-SECTION (ROLL-FORMED)	1 5/8" x 1 1/4"

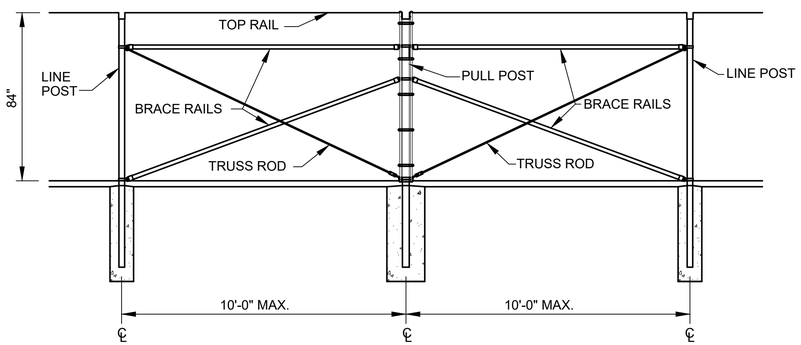

NOTE:
PROVIDE BRACE PANEL WHENEVER STRAIGHT RUNS EXCEED 500 FEET

BRACE PANEL DETAIL
N.T.S.

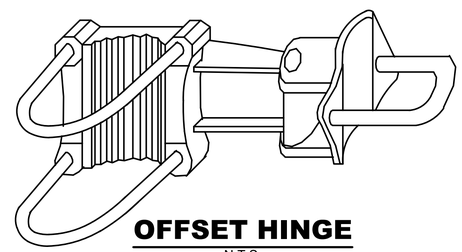

OFFSET HINGE
N.T.S.

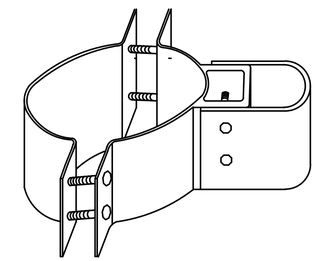

STANDARD HINGE
N.T.S.

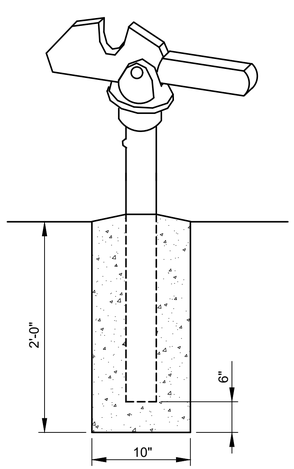

GATE KEEPER
(TO HOLD GATE OPEN)
N.T.S.

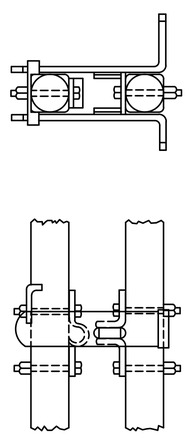

LATCH ASSEMBLY
N.T.S.

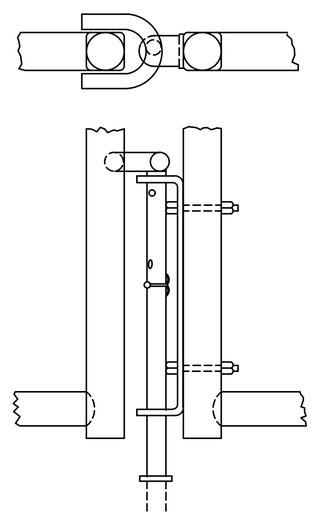

DROP ROD ASSEMBLY
N.T.S.

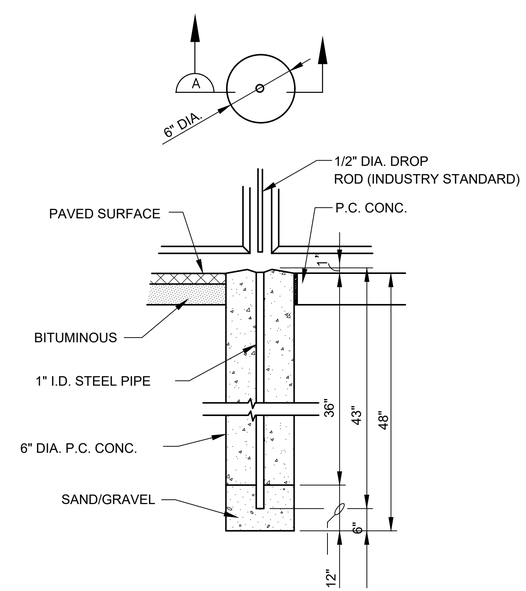

DROP ROD FOUNDATION
N.T.S.

ALABAMA LICENSED No. 29184 PROFESSIONAL ENGINEER KENNETH L. SANDERS
4/27/22

POLY

Revision	Description	Date

DESIGNED BY: KLS
DRAWN BY: BJ
DATE: MARCH 2022
ENG / ARCH / SURVEYOR OF RECORD: REGISTRATION No.

Cert. of Auth. No.	AL	FL	GA
ARCHITECT	CA-0460	AA-C000565	001118
ENGINEER	CA-784-E	CA-1818	001118

These drawings are copyrighted and the property of Poly-Inc. Any use, partial or full reproduction is prohibited without written Agreement with Poly-Inc.

POLY, INC.
1935 Heartland Avenue
Dothan, AL 36303
334-793-4700
102 Sunset Lane 2135 University Blvd. Ste. A
Shalimar, FL 32579 Tuscaloosa, AL 35401
850-609-1100 205-752-4037
WWW.POLY-INC.COM

NEW COTTONWOOD FIELDHOUSE / WEIGHTROOM BUILDING FOR HOUSTON COUNTY BOARD OF EDUCATION

CHAIN-LINK FENCE DETAILS

SHEET No.
C5.7
PROJECT No.
26-394.02

BID DOCUMENTS

Poly, Inc. - G:\CLEANSTUFF-15-28\26394 Houston BOE Open End Projects\26394.02 - Cottonwood Fieldhouse\03 - Final Design\CIVIL\05-Details\26394.02_C5.7 FENCE DETAILS.dwg [LAYOUT] Last Printed: April 27, 2022 - 06:26pm By: ksanders

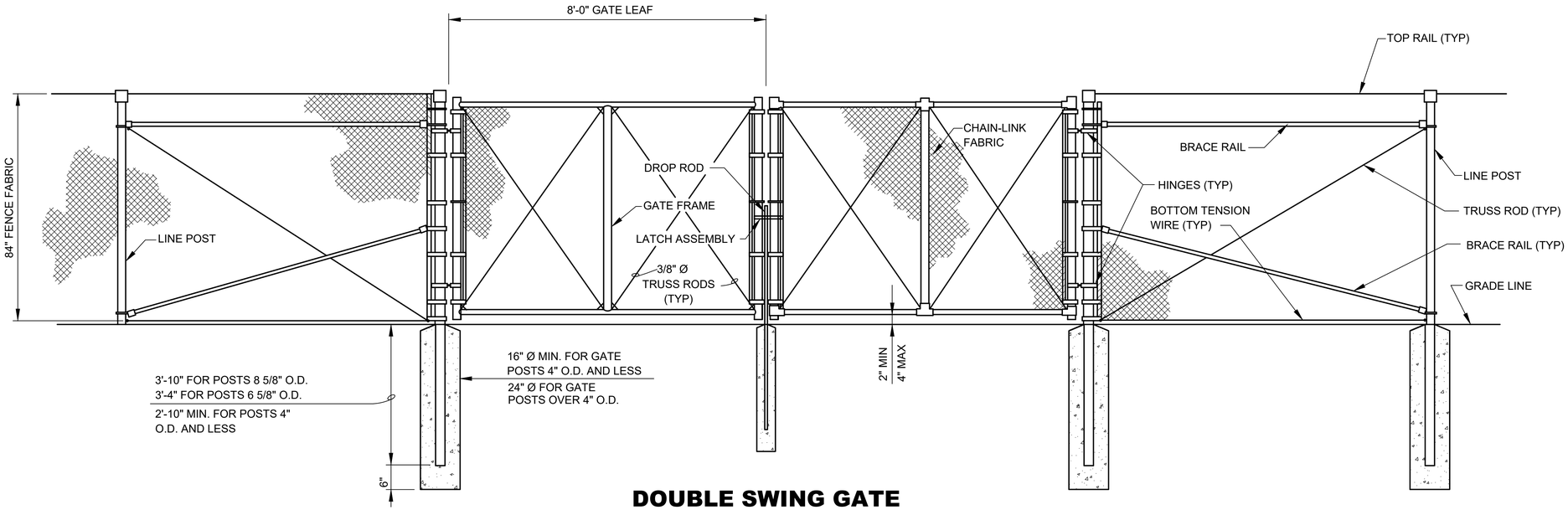

DOUBLE SWING GATE

N.T.S.
FE6-84-DO-RA-16

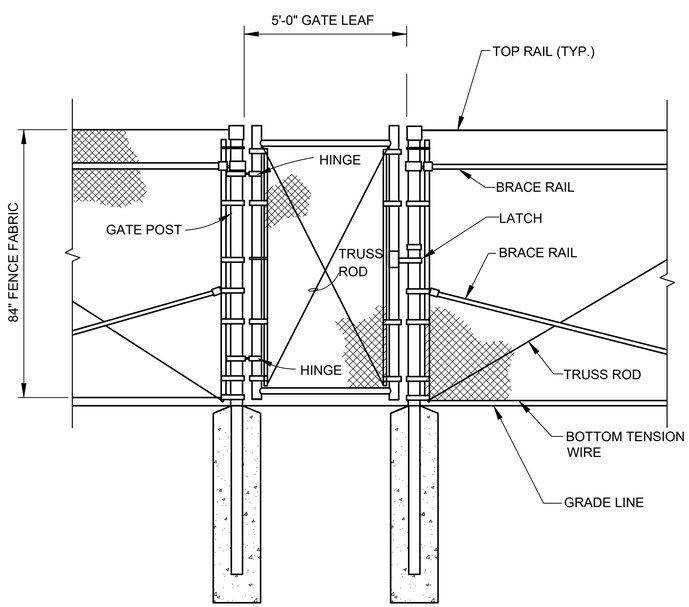

PERSONNEL GATE

N.T.S.
FE6-84-S0-RA-4

NOTES:

1. SWING GATES SHALL BE CONSTRUCTED WITH DROP RODS, PADLOCKS, LATCH ASSEMBLY AND GATE KEEPERS EXCEPT AS NOTED.
2. ALL GATE FRAMES SHALL BE A MINIMUM 1 29/32" NOMINAL (ROUND) OR 2" NOMINAL (SQUARE). GATE FRAMES SHALL BE OF WELDED CONSTRUCTION OR SHALL BE ASSEMBLED USING HEAVY FITTINGS. AT CONTRACTOR'S OPTION A WELDED HORIZONTAL BRACE MAY BE USED IN LIEU OF TRUSS RODS TO BRACE ALL WELDED GATE FRAMES. THE CONTRACTOR SHALL BE RESPONSIBLE FOR THE PROPER RIGID CONSTRUCTION OF ALL GATES SUPPLIED.
3. GATES SHALL BE DESIGNATED AS FOLLOWS:

FENCE TYPE	- FE5, FE6, ETC.
FENCE HEIGHT	- INCHES
TYPE OPENING	- SO (SINGLE) - DO (DOUBLE)
HINGE	- RA (STANDARD) - HO (OFFSET)
OPENING	- FEET (CLEAR OPENING BETWEEN GATE POSTS)

4. PERSONNEL GATE SHALL BE FE5-84-SO-RA-5
5. DOUBLE SWING GATE SHALL BE FE5-84-DO-RA-16.
6. GATE HARDWARE AND HINGE PINS SHALL BE WELDED TO PREVENT REMOVAL.

GATE POST SCHEDULE	
GATE LEAF WIDTH (NOMINAL)	OUTSIDE DIMENSION (NOMINAL)
6' OR LESS	2 7/8" OD 2 1/2" SQ
MORE THAN 6' TO 13'	4.0" OD

ALABAMA LICENSED No. 29184 PROFESSIONAL ENGINEER KENNETH L. SANDERS
4/27/22

POLY

Revision	Description	Date

DESIGNED BY: KLS
DRAWN BY: BJ
DATE: MARCH 2022
ENG / ARCH / SURVEYOR OF RECORD: REGISTRATION No.
Cert. of Auth. No. — AL — FL — GA.
ARCHITECT CA-4480 AA-C000350 001118 001118
ENGINEER CA-7842E CA-1818 001118 001118

These drawings are copyrighted and the property of Poly-Inc. Any use, partial or full reproduction is prohibited without written Agreement with Poly-Inc.

POLY, INC.
1935 Heartland Avenue
Dothan, AL 36303
334-793-4700
102 Sunset Lane 2135 University Blvd. Ste. A
Shallmar, FL 32579 Tuscaloosa, AL 35401
850-609-1100 205-752-4037
WWW.POLY-INC.COM

NEW COTTONWOOD FIELDHOUSE / WEIGHTROOM BUILDING FOR HOUSTON COUNTY BOARD OF EDUCATION

CHAIN-LINK FENCE DETAILS

SHEET No.
C5.8
PROJECT No.
26-394.02

BID DOCUMENTS

Poly, Inc. - G:\CLEANSTUFF-15-28\26394 Houston BOE Open End Projects\26394.02 - Cottonwood Fieldhouse\03 - Final Design\CIVIL\05-Details\26394.02_C5.8 FENCE DETAILS.dwg [LAYOUT] Last Printed: April 27, 2022 - 06:42pm By: ksanders

Poly, Inc. - G:\CLEANSTUFF-15-28\26394 Houston BOE Open End Projects\26394.02 - Cottonwood Fieldhouse\03 - Final Design\CIVIL\07-Erosion\26394.02_C7.0 EROSION NOTES.dwg [Layout1] Last Printed: April 27, 2022 - 06:27pm By: ksanders

EROSION CONTROL NOTES:

1. THE CONTRACTOR IS RESPONSIBLE FOR OBTAINING COVERAGE UNDER ADEM GENERAL NPDES PERMIT NO. ALR100000.
2. THE ESCAPE OF SEDIMENT FROM THE SITE SHALL BE PREVENTED BY THE INSTALLATION OF EROSION AND SEDIMENT CONTROL MEASURES PRIOR TO LAND-DISTURBING PRACTICES.
3. ANY DISTURBED AREA LEFT EXPOSED FOR A PERIOD GREATER THAN 13 DAYS SHALL BE STABILIZED WITH MULCH OR TEMPORARY SEEDING.
4. EROSION CONTROL MEASURES SHALL BE MAINTAINED AT ALL TIMES. IF FULL IMPLEMENTATION OF THE APPROVED PLAN DOES NOT PROVIDE FOR EFFECTIVE EROSION CONTROL, ADDITIONAL EROSION AND SEDIMENT CONTROL MEASURES SHALL BE IMPLEMENTED TO CONTROL OR TREAT THE SEDIMENT SOURCE AT NO ADDITIONAL COST TO THE OWNER.
5. ALL EROSION AND SEDIMENT CONTROL MEASURES SHALL BE CONTINUOUSLY MAINTAINED BY THE CONTRACTOR UNTIL A NOTICE OF TERMINATION IS FILED.
6. ALL PRACTICES SHALL BE IN ACCORDANCE WITH THE "ALABAMA HANDBOOK FOR EROSION CONTROL, SEDIMENT CONTROL, AND STORMWATER MANAGEMENT ON CONSTRUCTION SITES AND URBAN AREAS", LATEST EDITION.
7. SILT FENCE SHALL BE PLACED AT THE TOE OF ALL FILL SLOPES. REMOVE SEDIMENT WHEN STORAGE BECOMES 1/2 FULL.
8. SLOPES STEEPER THAN 3:1 SHALL BE STABILIZED WITH EROSION CONTROL BLANKET.
9. ALL TEMPORARY AND PERMANENT SEEDING MUST BE PERFORMED AT THE APPROPRIATE SEASON. ADDITIONAL PLANTINGS WILL BE NECESSARY IF A SUFFICIENT STAND OF GRASS FAILS TO GROW.
10. TOPSOIL SHALL BE STRIPPED AND STOCKPILED FOR USE IN DRESSING OF FINAL GRADES.
11. ALL DISTURBED AREAS NOT OTHERWISE COVERED BY IMPERVIOUS SURFACES SHALL BE PERMANENTLY SEEDED OR SODDED IN ACCORDANCE WITH THE SPECIFICATIONS.
12. THE CONTRACTOR SHALL CLEAN OUT ACCUMULATED SILT IN THE STORM DRAINAGE PIPES AT THE END OF CONSTRUCTION WHEN DISTURBED AREAS HAVE BEEN PERMANENTLY STABILIZED.
13. THE CONTRACTOR IS RESPONSIBLE FOR MEETING THE REQUIREMENTS OF ADEM ADMINISTRATIVE CODE 335-6-12 GENERAL NPDES PERMIT NO. ALR100000. THESE REQUIREMENTS INCLUDE, BUT ARE NOT LIMITED TO, THE FOLLOWING:
    a. NOTICE OF INTENT (NOI) INCLUDING ANY UPDATES AS REQUIRED BY CHANGES IN THE SCOPE OF WORK.
    b. DUTY TO MITIGATE ADVERSE IMPACTS.
    c. DISCHARGES CANNOT VIOLATE WATER QUALITY STANDARDS.
    d. CONSTRUCTION BEST MANAGEMENT PRACTICES PLAN (CBMPP) MAINTAINED ON-SITE BY A QUALIFIED CREDENTIALED PROFESSIONAL (QCP).
    e. EFFECTIVE EROSION AND SEDIMENT CONTROL MEASURES IMPLEMENTED.
    f. REGULAR COMPREHENSIVE INSPECTIONS OF SITE AND AFFECTED WATER BODIES BY QCP OR QUALIFIED CREDENTIALED INSPECTOR (QCI).
    g. COPIES OF INSPECTION REPORTS MAINTAINED.
    h. DETAILED LOGS MAINTAINED.
    i. SPILL PREVENTION, CONTROL, AND COUNTERMEASURE PLAN (SPCCP IMPLEMENTED.
    j. CANNOT DISCHARGE OTHER POLLUTANTS OR WASTES.
    k. RIGHT OF ENTRY. THE SITE WILL BE INSPECTED BY ADEM PERSONNEL.
    l. INFORMATION PROVIDED TO ADEM UPON REQUEST.
    m. POSTING OF PROPER REGISTRATION SIGNAGE AT THE SITE.
    n. INSTALLATION OF A RAIN GAUGE AT THE SITE.
    o. PROPER RECORD KEEPING AS REQUIRED BY ADEM.
    p. NOTICE OF TERMINATION (NOT).
14. THE CONTRACTOR SHALL NOT DEVIATE FROM THE PLANS AND SPECIFICATIONS WITHOUT PRIOR WRITTEN CONSENT FROM THE ENGINEER.

NOTES:

1. GROUNDSKEEPING OR “GOOD HOUSEKEEPING” DESCRIBES THE VARIOUS ACTIVITIES AND MEASURES, IN ADDITION TO THE SPECIFIC PRACTICES USED FOR EROSION AND SEDIMENT CONTROL THAT ARE ESSENTIAL DURING CONSTRUCTION FOR THE PROTECTION OF ENVIRONMENTAL QUALITY. GROUNDSKEEPING IS APPLICABLE AT ALL CONSTRUCTION SITES.
2. GROUNDSKEEPING TYPICALLY INCLUDES THE FOLLOWING ACTIVITIES AND MEASURES:

2.1. INSPECTIONS DURING CONSTRUCTION/INSTALLATION OF EROSION AND SEDIMENT CONTROL AND STORMWATER MEASURES (BMPS)
2.2. SPILL PREVENTION AND MATERIAL MANAGEMENT
2.3. SPILL CONTROLS
2.4. OTHER POTENTIAL ACTIVITIES AND MEASURES (EXAMPLES: REMOVAL OF CONTAMINATED SOILS, MANAGEMENT OF HAZARDOUS PRODUCTS, PROTECTION OF AIR QUALITY, ETC.)

3. INSPECTIONS OF BMPS

3.1. INSPECTIONS SHOULD BE MADE REGULARLY AND TIMELY TO ENSURE THAT EROSION AND SEDIMENT CONTROL AND STORMWATER MANAGEMENT PRACTICES ARE PERFORMING AS PLANNED AND WHETHER OR NOT MAINTENANCE IS NEEDED. IN ADDITION, INSPECTIONS AND REPORTS SHOULD MEET LOCAL AND STATE REQUIREMENTS.

4. SPILL PREVENTION AND MATERIAL MANAGEMENT

4.1. ALABAMA DEPARTMENT ENVIRONMENTAL MANAGEMENT (ADEM) REGULATIONS REQUIRE THAT AN OPERATOR/OWNER IMPLEMENT A SPILL PREVENTION CONTROL AND COUNTER MEASURES (SPCC) PLAN FOR ALL TEMPORARY AND PERMANENT ONSITE FUEL OR CHEMICAL STORAGE TANKS OR FACILITIES TO ADDRESS THE SAFE STORAGE, HANDLING AND CLEANUP OF PETROLEUM PRODUCTS AND OTHER CHEMICALS.
4.2. ALL VEHICLES KEPT ON THE SITE NEED TO BE MONITORED FOR LEAKS AND RECEIVE REGULAR PREVENTIVE MAINTENANCE TO REDUCE THE CHANCE OF LEAKAGE.
4.3. IF PETROLEUM PRODUCTS ARE STORED ON SITE, A SECONDARY CONTAINMENT FACILITY WILL BE REQUIRED IF THE CUMULATIVE STORAGE CAPACITY OF ALL TANKS, GREATER THAN 55 GALLONS, AT THE SITE EXCEEDS 1,320 GALLONS. THE SECONDARY CONTAINMENT FACILITY MUST BE DESIGNED BY A QUALIFIED DESIGN PROFESSIONAL.
4.4. PETROLEUM PRODUCTS SHOULD BE STORED IN LABELED TIGHTLY SEALED CONTAINERS.
4.5. ANY ASPHALT SUBSTANCES USED ON-SITE SHOULD BE APPLIED ACCORDING TO THE MANUFACTURER'S RECOMMENDATIONS.
4.6. NO FUELING, SERVICING, MAINTENANCE, OR REPAIR OF EQUIPMENT OR MACHINERY SHOULD BE DONE WITHIN 50 FEET OF A STREAM, OR WITHIN 100 FEET OF A STREAM CLASSIFIED FOR PUBLIC WATER SUPPLY (PWS) OR OUTSTANDING ALABAMA WATER (OAW), OR DESIGNATED AS AN OUTSTANDING NATIONAL RESOURCE WATER (ONRW) OR A SINKHOLE.
4.7. ONLY DESIGNATED ENTRANCES SHOULD BE USED FOR CONSTRUCTION ACCESS TO THE SITE. MUD TRACKED FROM THE SITE ONTO STREETS AND ROADS SHOULD BE CLEANED ON A DAILY BASIS IF NEEDED.
4.8. CONCRETE TRUCKS SHOULD BE ALLOWED TO WASH ONLY IN LOCATIONS WHERE DISCHARGE IS APPROPRIATELY TREATED TO MEET APPLICABLE REGULATORY REQUIREMENTS. IT IS NOT PERMISSIBLE TO DISCHARGE CONCRETE WASH DIRECTLY TO STREAMS OR STORM DRAINS. CONCRETE WASH CAN CONTAIN SEDIMENT, AS WELL AS, ALKALINITY AND CHEMICAL ADDITIVES THAT COULD BE HARMFUL TO FISH, STREAM BOTTOM MACROINVERTEBRATES AND WILDLIFE.
4.9. NO FUELS, OILS, LUBRICANTS, SOLVENTS, OR OTHER HAZARDOUS MATERIALS CAN BE DISPOSED OF ON THE SITE. ALL HAZARDOUS MATERIAL MUST BE PROPERLY DISPOSED OF IN ACCORDANCE WITH STATE LAW.
4.10. SOLID WASTE SHOULD BE DISPOSED OF IN ACCORDANCE WITH STATE LAW. DUMPSTERS OR OTHER COLLECTION FACILITIES MUST BE PROVIDED AS NEEDED.
4.11. PORTABLE TOILETS SHOULD BE LOCATED SO THAT ACCIDENTAL SPILLS WILL NOT DISCHARGE INTO A STORM SEWER OR CONCENTRATED FLOW AREA.
4.12. WATER FOR PRESSURE TESTING SANITARY SEWERS, FLUSHING WATER LINES, ETC., MAY BE DISCHARGED ONLY IN APPROVED AREAS AND TO PREVENT DISCHARGING TO SURFACE WATERS. DISCHARGE OF HYDROSTATIC TEST WATER MAY REQUIRE ADDITIONAL PERMITTING, PARTICULARLY IF CHLORINATED PUBLIC WATER IS USED.

5. SPILL CONTROLS

5.1. THE OPERATOR/OWNER IS EXPECTED TO MAINTAIN ON-SITE OR HAVE READILY AVAILABLE SUFFICIENT OIL & GREASE ABSORBING MATERIAL AND FLOTATION BOOMS TO CONTAIN AND CLEAN-UP FUEL OR CHEMICAL SPILLS AND LEAKS.
5.2. EQUIPMENT AND MATERIALS INCLUDE, BUT ARE NOT LIMITED TO BROOMS, DUST PANS, MOPS, RAGS, GLOVES, GOGGLES, ABSORBENT CLAY, SAND, SAWDUST, AND PLASTIC AND METAL TRASH CONTAINERS SPECIFICALLY FOR THIS PURPOSE.
5.3. SPILLS OF TOXIC OR HAZARDOUS MATERIAL MUST BE REPORTED IMMEDIATELY. THE OPERATOR/OWNER IS REQUIRED TO IMMEDIATELY NOTIFY ADEM AFTER BECOMING AWARE OF A SIGNIFICANT SPILL/LEAK OR VISIBLE OIL SHEEN IN THE VICINITY OF THE CONSTRUCTION ACTIVITY. IN THE EVENT OF A SPILL WITH THE POTENTIAL TO IMPACT GROUNDWATER OR OTHER WATERS OF THE STATE, THE OPERATOR/OWNER IS EXPECTED TO IMMEDIATELY CALL THE NATIONAL RESPONSE CENTER (NRC) AT 1-800-424-8802 AND THE ALABAMA EMERGENCY MANAGEMENT AGENCY (AEMA) AT 1-800-843-0699. THE CALLER SHOULD BE PREPARED TO REPORT THE NAME, ADDRESS AND TELEPHONE NUMBER OF PERSON REPORTING SPILL, THE EXACT LOCATION OF THE SPILL, THE COMPANY NAME AND LOCATION, THE MATERIAL SPILLED, THE ESTIMATED QUANTITY, THE SOURCE OF SPILL, THE CAUSE OF THE SPILL, THE NEAREST DOWNSTREAM WATER WITH THE POTENTIAL TO RECEIVE THE SPILL, AND THEACTIONS TAKEN FOR CONTAINMENT AND CLEANUP.
5.4. ALL SPILLS NEED TO BE CLEANED UP IMMEDIATELY AFTER DISCOVERY AND PROPERLY CONTAINERIZED FOR PROPER DISPOSAL. REFER TO MATERIAL SAFETY DATA SHEETS FOR SAFE HANDLING PROCEDURES. BURIAL IS NOT ACCEPTABLE.
5.5. THE SPILL AREA MUST BE KEPT WELL VENTILATED AND PERSONNEL NEED TO WEAR APPROPRIATE PROTECTIVE CLOTHING TO PREVENT INJURY FROM CONTACT WITH A HAZARDOUS SUBSTANCE.
5.6. THE SPILL PREVENTION PLAN NEEDS TO BE ADJUSTED TO INCLUDE MEASURES TO PREVENT ANY SPILL FROM BEING REPEATED, AND THE PLAN NEEDS TO SHOW HOW TO CLEAN UP THE SPILL IF ANOTHER ONE DOES OCCUR.

6. REMOVAL OF CONTAMINATED SOILS AND UNDERGROUND STORAGE TANKS

6.1. SITE ASSESSMENT AND REMOVAL OF CONTAMINATED SOILS AND UNDERGROUND STORAGE TANKS SHOULD BE DONE FOLLOWING A SITE ASSESSMENT BASED ON PROCEDURES PROVIDED BY THE ALABAMA DEPARTMENT OF ENVIRONMENTAL MANAGEMENT.

7. MANAGEMENT OF HAZARDOUS PRODUCTS

7.1. PRODUCTS MUST BE KEPT IN ORIGINAL CONTAINERS UNLESS THEY ARE NOT RESEALABLE. IF A PRODUCT IS TRANSFERRED TO A NEW CONTAINER, IT MUST BE PROPERLY MARKED AND LABELED.
7.2. ORIGINAL LABELS AND MATERIAL SAFETY DATA SHEETS SHOULD BE RETAINED UNTIL THE RELATED PRODUCT IS NO LONGER ON THE SITE.
7.3. IF SURPLUS PRODUCT MUST BE DISPOSED OF, DISPOSAL MUST BE DONE IN ACCORDANCE WITH STATE (ALABAMA DEPARTMENT OF ENVIRONMENTAL MANAGEMENT REGULATIONS).

8. PROTECTION OF AIR QUALITY

8.1. SMOKE: BURNING ON THE SITE MAY REQUIRE A PERMIT FROM THE ALABAMA FORESTRY COMMISSION. COUNTY AND CITY ORDINANCES MAY ALSO APPLY. STARTING DISPOSAL FIRES WITH DIESEL FUEL, PETROLEUM PRODUCTS, OR OLD TIRES IS NOT A RECOMMENDED PRACTICE. BURN PITS WITH FANS TO GENERATE HOT DISPOSAL FIRES DECREASES THE FIRE TIME AND MINIMIZES SMOKE. BURNING MAY BE PROHIBITED BY STATE “BURN BANS” TO REDUCE POTENTIAL FOR GROUND-LEVEL OZONE.
8.2. DUST: DUST SHOULD BE CONTROLLED IF IT WILL CREATE A PROBLEM EITHER ON OR OFF OF THE SITE. IF MEASURES ARE NOT INCLUDED IN THE SITE DESIGN PLAN SEE THE PRACTICE DUST CONTROL FOR POTENTIAL MEASURES TO USE TO ELIMINATE OR MINIMIZE DUST.

9. OTHER GOOD GROUNDSKEEPING PRACTICES

9.1. ALL MATERIALS STORED ON-SITE SHOULD BE STORED IN A NEAT, ORDERLY MANNER IN THEIR APPROPRIATE CONTAINERS AND, IF POSSIBLE, UNDER A ROOF OR OTHER ENCLOSURE.
9.2. PRODUCTS SHOULD BE KEPT TIGHTLY SEALED IN THEIR ORIGINAL CONTAINERS WITH THE ORIGINAL MANUFACTURER'S LABEL.
9.3. WHENEVER POSSIBLE, ALL OF A PRODUCT SHOULD BE USED UP BEFORE DISPOSING OF THE CONTAINER.
9.4. MANUFACTURER'S RECOMMENDATIONS FOR PROPER USE AND DISPOSAL MUST BE FOLLOWED. SEE MATERIAL SAFETY DATA SHEETS FOR PRODUCT OF CONCERN.
9.5. THE SITE SUPERINTENDENT OR A DESIGNATED EMPLOYEE SHOULD INSPECT DAILY TO ENSURE PROPER USAGE, STORAGE AND DISPOSAL OF MATERIAL

10. ALL PRACTICES SHALL BE IN ACCORDANCE WITH THE "ALABAMA HANDBOOK FOR EROSION CONTROL, SEDIMENT CONTROL, AND STORMWATER MANAGEMENT ON CONSTRUCTION SITES AND URBAN AREAS", LATEST EDITION.

11. EROSION AND SEDIMENT CONTROL SHALL BE STRICTLY ENFORCED.

GROUNDSKEEPING (GK)

POLY, INC.
1935 Headland Avenue
Dothan, AL 36303
334-793-4700
102 Sunset Lane, Shalimar, FL 32579, 850-609-1100
2135 University Blvd. Ste. A, Tuscaloosa, AL 35401, 205-752-4037
WWW.POLY-INC.COM

DESIGNED BY: K.L.S.	DRAWN BY: B.J.	DATE: MARCH 2022
ENG / ARCH / SURVEYOR OF RECORD:		REGISTRATION No.

Cert. of Auth. No.	AL.	FL.	GA.
ARCHITECT	CA-0480	AA-C001551	001118
ENGINEER	CA-78-E	CA-1818	001118

These drawings are copyrighted and the property of Poly-Inc. Any use, partial or full reproduction is prohibited except by written Agreement with Poly-Inc.

Revision	Description	Date

NEW COTTONWOOD FIELDHOUSE / WEIGHTROOM BUILDING FOR HOUSTON COUNTY BOARD OF EDUCATION

EROSION CONTROL NOTES

SHEET No. C7.0

PROJECT No. 26-394.02

BID DOCUMENTS

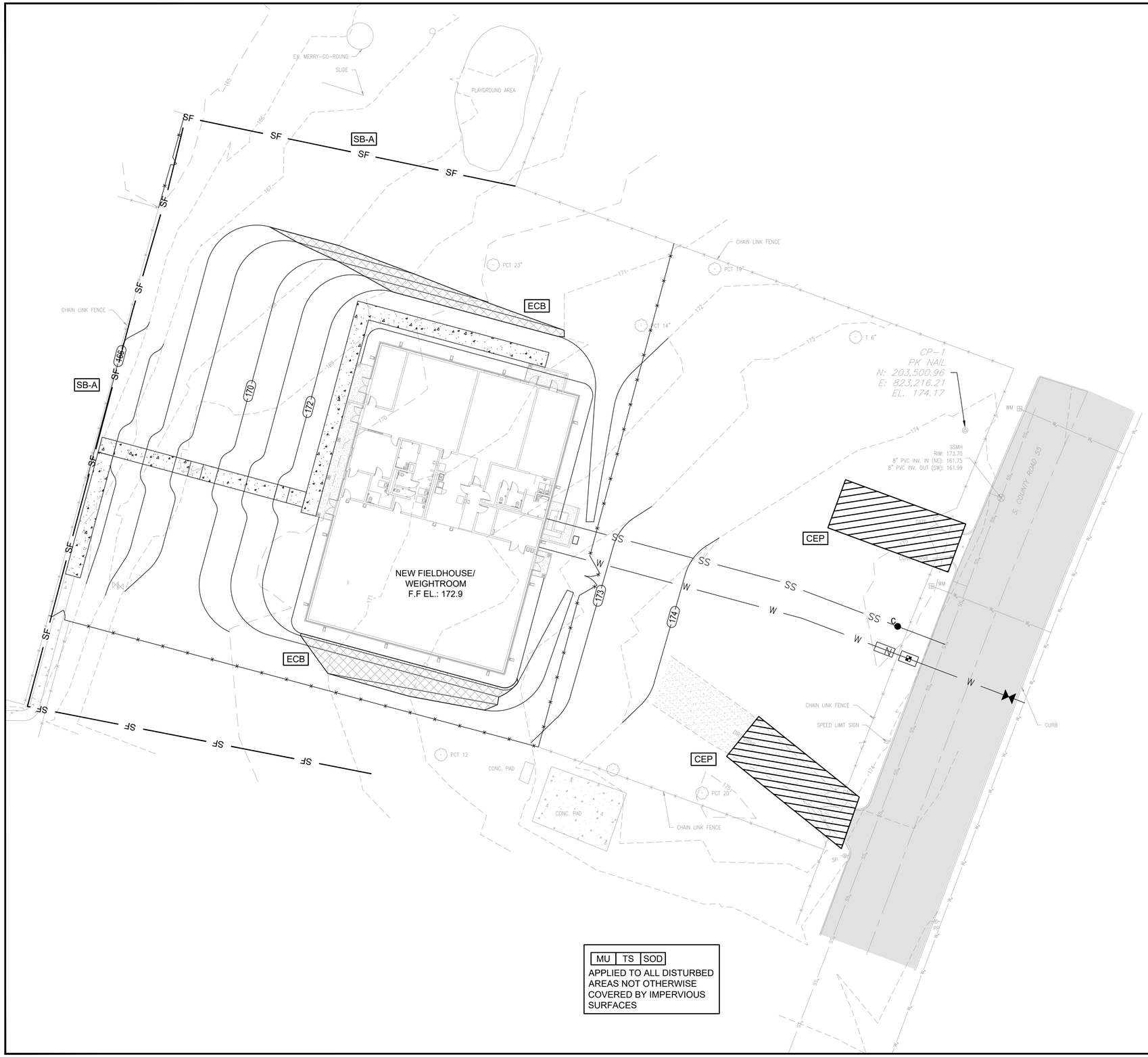

MU	TS	SOD

APPLIED TO ALL DISTURBED AREAS NOT OTHERWISE COVERED BY IMPERVIOUS SURFACES

EROSION CONTROL LEGEND

ECB	EROSION CONTROL BLANKET
CEP	CONSTRUCTION EXIT PAD
SF	SEDIMENT BARRIER, TYPE A SILT FENCE
MU	MULCHING
TS	TEMPORARY SEEDING
SOD	SODDING

NOTES:

1. SEE SHEET C7.0 FOR EROSION CONTROL NOTES.
2. CONTRACTOR TO VERIFY LOCATIONS OF EXISTING UTILITIES BEFORE STARTING WORK.
3. ALL DISTURBED AREAS SHALL BE TEMPORARILY AND PERMANENTLY STABILIZED. PERMANENT STABILIZATION SHALL BE SOLID SODDING AND SHALL BE SAME SPECIES AS SURROUNDING AREA UNLESS OTHERWISE DIRECTED BY THE ENGINEER.
4. ALL PRACTICES SHALL BE IN ACCORDANCE WITH THE "ALABAMA HANDBOOK FOR EROSION CONTROL, SEDIMENT CONTROL, AND STORMWATER MANAGEMENT ON CONSTRUCTION SITES AND URBAN AREAS", LATEST EDITION.
5. **EROSION AND SEDIMENT CONTROL SHALL BE STRICTLY ENFORCED.**

N
W E
S

GRAPHIC SCALE

20' 10' 0 20' 40'

SCALE: 1" = 20'-0"

ALABAMA LICENSED PROFESSIONAL ENGINEER KENNETH L. SANDERS No. 29184 4/27/22

POLY

Revision	Description	Date

DATE: MARCH 2022

DRAWN BY: B.J.

DESIGNED BY: K.L.S.

	Cert. of Auth. No.	AL	FL	GA
ARCHITECT	GA-AR0	AA-C001051	001118	
ENGINEER	GA-76-E	GA-1818	001118	

These drawings are copyrighted and the property of Poly-Inc. Any use, partial or full reproduction is prohibited without written Agreement with Poly-Inc.

POLY, INC.
1935 Headland Avenue
Dothan, AL 36303
334-793-4700
102 Sunset Lane
Shalimar, FL 32579
850-609-1100
2135 University Blvd. Ste. A
Tuscaloosa, AL 35401
205-752-4037
WWW.POLY-INC.COM

NEW COTTONWOOD FIELDHOUSE / WEIGHTROOM BUILDING FOR HOUSTON COUNTY BOARD OF EDUCATION

EROSION CONTROL PLAN

SHEET No.
C7.1

PROJECT No.
26-394.02

BID DOCUMENTS

Poly, Inc. - G:\CLEANSTUFF-15-28\26394 Houston BOE Open End Projects\26394.02 - Cottonwood Fieldhouse\03 - Final Design\CIVIL\07-Erosion\26394.02_C7.1_EROSION PLAN.dwg [Layout1] Last Printed: April 27, 2022 - 06:51pm By: ksanders

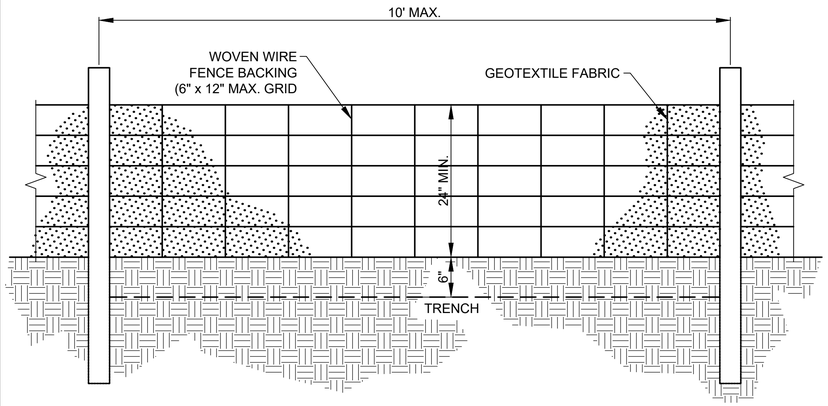

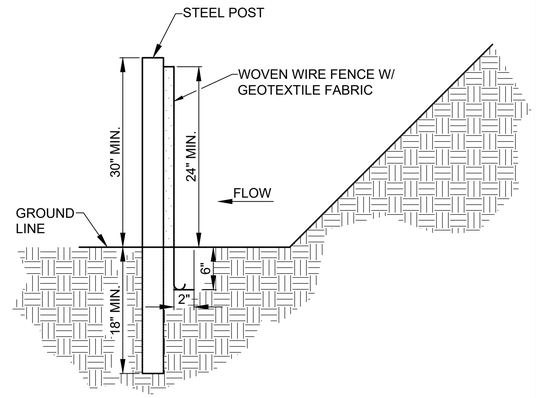

SEDIMENT BARRIER (TYPE A SILT FENCE) (SB-A)

N.T.S.

NOTES:

1. DETERMINE EXACT LOCATION OF UNDERGROUND UTILITIES SO THAT LOCATIONS FOR DIGGING OR PLACEMENT OF STAKES CAN BE SELECTED WHERE UTILITIES WILL NOT BE DAMAGED.
2. FENCE SHOULD BE INSTALLED ON THE CONTOUR, SO THAT RUNOFF CAN BE INTERCEPTED AS SHEET FLOW.
3. FENCE SHOULD BE PLACED SO THAT RUNOFF FROM DISTURBED AREAS MUST PASS THROUGH THE FENCE.
4. DIG A TRENCH AT LEAST 6" DEEP ALONG THE FENCE ALIGNMENT AS SHOWN IN FIGURE SB-1.
5. DRIVE POSTS AT LEAST 18" INTO THE GROUND ON THE DOWNSLOPE SIDE OF THE TRENCH. SPACE POSTS A MAXIMUM OF 10 FEET IF FENCE IS SUPPORTED BY WOVEN WIRE, OR 6 FEET IF HIGH STRENGTH FABRIC AND NO SUPPORT FENCE IS USED.
6. FASTEN SUPPORT WIRE FENCE TO UPSLOPE SIDE OF POSTS, EXTENDING 6" INTO THE TRENCH AS SHOWN IN FIGURE SB-1.
7. ATTACH CONTINUOUS LENGTH OF FABRIC TO UPSLOPE SIDE OF FENCE POSTS. MINIMIZE THE NUMBER OF JOINTS AND WHEN NECESSARY TO JOIN ROLLS, THEY SHOULD BE JOINED BY ROLLING THE ENDS TOGETHER USING THE "ROLL JOINT" METHOD ILLUSTRATED IN FIGURE SB-4. AVOID JOINTS AT LOW POINTS IN THE FENCE LINE.
8. FOR TYPE A & B SILT FENCE, PLACE THE BOTTOM 12" OF FABRIC IN THE 6" DEEP (MINIMUM) TRENCH, LAPPING TOWARD THE UPSLOPE SIDE.
9. BACKFILL THE TRENCH WITH COMPACTED EARTH OR GRAVEL AS SHOWN IN FIGURE SB-1.
10. PROVIDE GOOD ACCESS IN AREAS OF HEAVY SEDIMENTATION FOR CLEAN OUT AND MAINTENANCE.
11. POSTS, FABRIC, FASTENERS, ETC. SHALL BE PER TABLES SB-1, SB-3, AND SB-4.
12. WIRE SHALL BE A MIN. OF 36 INCHES IN WIDTH, HAVE A MIN. OF 6 WIRES WITH 12" STAY SPACING, AND BE MIN. 12.5 GAUGE.
13. INSPECT SEDIMENT FENCES AT LEAST ONCE A WEEK AND AFTER EACH SIGNIFICANT RAIN EVENT.
14. THE CONTRACTOR SHALL MAINTAIN THE SILT FENCE UNTIL THE PROJECT IS VEGETATED OR ACCEPTED. FILTER FABRIC SHALL BE REPLACED WHENEVER IT HAS DETERIORATED TO SUCH AN EXTENT THAT IT REDUCES THE EFFECTIVENESS OF THE FABRIC.
15. ALL PRACTICES SHALL BE IN ACCORDANCE WITH THE "ALABAMA HANDBOOK FOR EROSION CONTROL, SEDIMENT CONTROL, AND STORMWATER MANAGEMENT ON CONSTRUCTION SITES AND URBAN AREAS", LATEST EDITION.
16. **EROSION AND SEDIMENT CONTROL SHALL BE STRICTLY ENFORCED.**

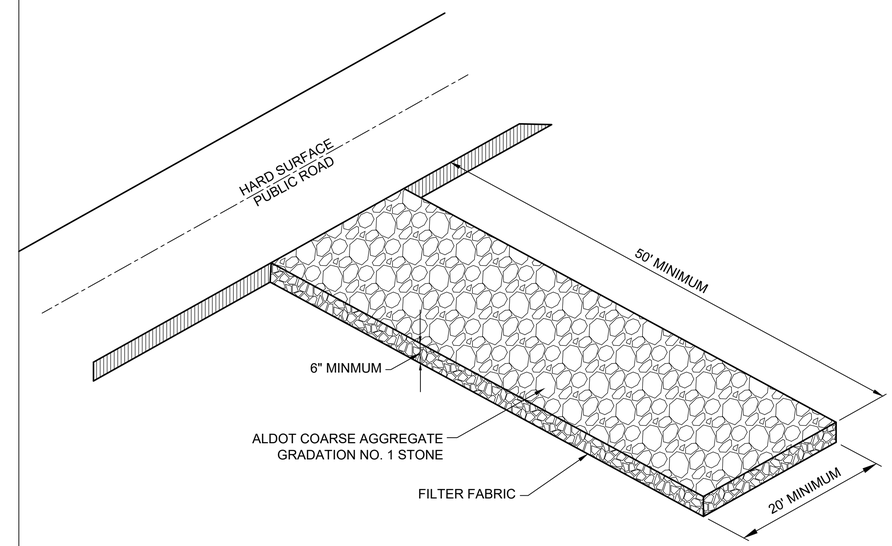

CONSTRUCTION EXIT PAD (CEP)

SCALE: N.T.S.

NOTES:

1. AT A MINIMUM, THE WIDTH OF THE PAD SHOULD EQUAL FULL WIDTH OF ALL POINTS OF VEHICULAR EGRESS, BUT NOT LESS THAN 20 FEET WIDE.
2. EXCAVATE ENTRANCE AREA TO A DEPTH OF 3 INCHES AND REMOVE ALL VEGETATION, ROOTS, AND OTHER UNSUITABLE MATERIAL FROM THE FOUNDATION AREA.
3. LOCATIONS FOR CONSTRUCTION EXISTS ARE SHOWN IN THE PLAN. THE CONTRACTOR SHALL INSTALL EXITS AS NEEDED IF PAVED ROADS OTHER THAN THOSE INDICATED IN THE PLAN ARE DISTURBED.
4. INSPECT EXIT PAD WEEKLY AND AFTER STORM EVENTS OR HEAVY USE.
5. THE EXIT SHALL BE MAINTAINED IN A CONDITION WHICH WILL PREVENT TRACKING OR FLOW OF MUD ONTO PUBLIC RIGHTS-OF-WAY. THIS MAY REQUIRE PERIODIC TOP DRESSING WITH COARSE AGGREGATE, AS CONDITIONS DEMAND, AND REPAIR AND / OR CLEAN OUT OF ANY STRUCTURES TO TRAP SEDIMENT. ALL MATERIALS SPILLED, DROPPED, WASHED, OR TRACKED FROM VEHICLES OR SITE ONTO ROADWAYS OR INTO STORM DRAINS MUST BE REMOVED IMMEDIATELY.
6. ALL PRACTICES SHALL BE IN ACCORDANCE WITH THE "ALABAMA HANDBOOK FOR EROSION CONTROL, SEDIMENT CONTROL, AND STORMWATER MANAGEMENT ON CONSTRUCTION SITES AND URBAN AREAS", LATEST EDITION.
7. **EROSION AND SEDIMENT CONTROL SHALL BE STRICTLY ENFORCED.**

ALABAMA LICENSED No. 29184 PROFESSIONAL ENGINEER KENNETH L. SANDERS 4/27/22

POLY

Revision	Description	Date

DESIGNED BY: KLS
DRAWN BY: BJ
DATE: MARCH 2022
ENG / ARCH / SURVEYOR OF RECORD: REGISTRATION No.
Cert. of Auth. No. AL FL GA
ARCHITECT CA-0480 AA-C000565 001118 001118
ENGINEER CA-784-E CA-1818 001118

These drawings are copyrighted and the property of Poly-Inc. Any use, partial or full reproduction is prohibited without written Agreement with Poly-Inc.

POLY, INC.
1935 Heartland Avenue
Dothan, AL 36303
334-793-4700
102 Sunset Lane
Shallmar, FL 32579
850-609-1100
2135 University Blvd. Ste. A
Tuscaloosa, AL 35401
205-752-4037
WWW.POLY-INC.COM

NEW COTTONWOOD FIELDHOUSE / WEIGHTROOM BUILDING FOR HOUSTON COUNTY BOARD OF EDUCATION

EROSION CONTROL DETAILS

SHEET No.
C7.2
PROJECT No.
26-394.02

BID DOCUMENTS

Poly, Inc. - G:\CLEANSTUFF-15-28\26394 Houston BOE Open Entr Projects\26394.02 - Cottonwood Fieldhouse\03 - Final Design\CIVIL\07-Erosion\26394.02_C7.2 EROSION DETAILS.dwg [LAYOUT] Last Printed: April 27, 2022 - 06:28pm By: ksanders

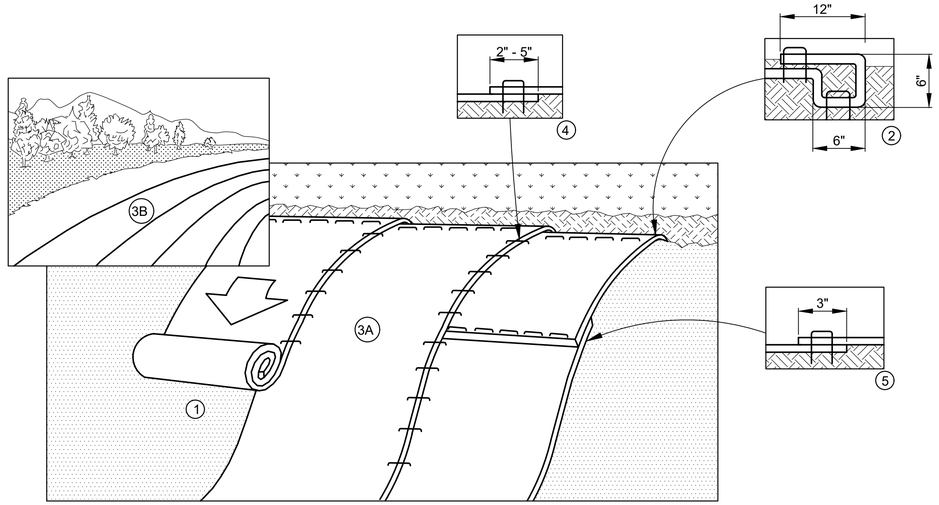

EROSION CONTROL BLANKET (ECB)

SCALE: N.T.S.

NOTES:

1. PREPARE SOIL BEFORE INSTALLING BLANKETS, INCLUDING ANY NECESSARY APPLICATION OF LIME, FERTILIZER, AND SEED.

2. BEGIN AT THE TOP OF THE SLOPE BY ANCHORING THE BLANKET IN A 6" DEEP X 6" WIDE TRENCH WITH APPROXIMATELY 12" OF BLANKET EXTENDED BEYOND THE UP-SLOPE PORTION OF THE TRENCH. ANCHOR THE BLANKET WITH A ROW OF STAPLES/STAKES APPROXIMATELY 12" APART IN THE BOTTOM OF THE TRENCH. BACKFILL AND COMPACT THE TRENCH AFTER STAPLING. APPLY SEED TO COMPACTED SOIL AND FOLD REMAINING 12" PORTION OF BLANKET BACK OVER SEED AND COMPACTED SOIL. SECURE BLANKET OVER COMPACTED SOIL WITH A ROW OF STAPLES/STAKES SPACED APPROXIMATELY 12" APART ACROSS THE WIDTH OF THE BLANKET.

3. ROLL THE BLANKETS (A) DOWN OR (B) HORIZONTALLY ACROSS THE SLOPE. BLANKETS WILL UNROLL WITH APPROPRIATE SIDE AGAINST THE SOIL SURFACE. ALL BLANKETS MUST BE SECURELY FASTENED TO SOIL SURFACE BY PLACING STAPLES/STAKES IN APPROPRIATE LOCATIONS AS SHOWN IN THE MANUFACTURER'S INSTRUCTIONS.

4. THE EDGES OF PARALLEL BLANKETS MUST BE STAPLED WITH APPROXIMATELY 2"-5" OVERLAP DEPENDING ON BLANKET TYPE.

5. CONSECUTIVE BLANKETS SPLICED DOWN THE SLOPE MUST BE PLACED END OVER END (SHINGLE STYLE) WITH AN APPROXIMATE 3" OVERLAP. STAPLE THROUGH OVERLAPPED AREA, APPROXIMATELY 12" APART ACROSS ENTIRE BLANKET WIDTH.

6. IN LOOSE SOIL CONDITIONS, THE USE OF STAPLE OR STAKE LENGTHS GREATER THAN 6" MAY BE NECESSARY TO PROPERLY SECURE THE BLANKETS. FOLLOW THE MANUFACTURER'S INSTRUCTIONS.

7. EROSION CONTROL BLANKET SHALL BE INSTALLED AS SHOWN ON THE SITE PLANS.

8. EROSION CONTROL BLANKET SHALL BE ALDOT TYPE S3 (FOR MAX. SLOPE 3:1) OR S2 (FOR MAX. SLOPE 2:1) IN ACCORDANCE WITH SECTION 659 OF THE ALDOT 2012 STANDARD SPECIFICATIONS FOR HIGHWAY CONSTRUCTION.

9. ALL PRACTICES SHALL BE IN ACCORDANCE WITH THE "ALABAMA HANDBOOK FOR EROSION CONTROL, SEDIMENT CONTROL, AND STORMWATER MANAGEMENT ON CONSTRUCTION SITES AND URBAN AREAS", LATEST EDITION.

10. **EROSION AND SEDIMENT CONTROL SHALL BE STRICTLY ENFORCED.**

ALABAMA LICENSED No. 29184 PROFESSIONAL ENGINEER KENNETH L. SANDERS 4/27/22

POLY

Revision	Description	Date

DESIGNED BY: KLS
DRAWN BY: BJ
DATE: MARCH 2022

ENG / ARCH / SURVEYOR OF RECORD: REGISTRATION No.

Cert. of Auth. No.		
ARCHITECT	CA-0480	AA-C001050
ENGINEER	CA-784-E	CA-1818

FL GA
001118 001118
001118 001118

These drawings are copyrighted and the property of Poly-Inc. Any use, partial or full reproduction is prohibited without the written Agreement with Poly-Inc.

POLY, INC.
1935 Heartland Avenue
Dothan, AL 36303
334-793-4700
102 Sunset Lane Shallmar, FL 32579 850-609-1100
2135 University Blvd. Ste. A Tuscaloosa, AL 35401 205-752-4037
WWW.POLY-INC.COM

NEW COTTONWOOD FIELDHOUSE / WEIGHTROOM BUILDING FOR HOUSTON COUNTY BOARD OF EDUCATION

EROSION CONTROL DETAILS

SHEET No.
C7.3

PROJECT No.
26-394.02

BID DOCUMENTS

Poly, Inc. - G:\CLEANSTUFF-15-28\26394 Houston BOE Open End Projects\26394.02 - Cottonwood Fieldhouse\03 - Final Design\CIVIL\07-Erosion\26394.02_C7.3 EROSION DETAILS.dwg [LAYOUT] Last Printed: April 27, 2022 - 06:28pm By: ksanders

GENERAL STRUCTURAL NOTES

GENERAL

1. NO PROVISION OF ANY REFERENCED STANDARD SPECIFICATION, MANUAL OR CODE (WHETHER OR NOT SPECIFICALLY INCORPORATED BY REFERENCE IN THE CONTRACT DOCUMENTS) SHALL BE EFFECTIVE TO CHANGE THE DUTIES AND RESPONSIBILITIES OF OWNER, CONTRACTOR, ENGINEER OR SUPPLIER OR ANY OF THEIR CONSULTANTS, AGENTS OR EMPLOYEES FROM THOSE SET FORTH IN THE CONTRACT DOCUMENTS, NOR SHALL IT BE EFFECTIVE TO ASSIGN TO THE STRUCTURAL ENGINEER OF RECORD OR ANY OF THE STRUCTURAL ENGINEER OF RECORD'S CONSULTANTS, AGENTS, OR EMPLOYEES ANY DUTY OR AUTHORITY TO SUPERVISE OR DIRECT THE FURNISHING OR PERFORMANCE OF THE WORK OR AUTHORITY TO UNDERTAKE RESPONSIBILITIES CONTRARY TO THE PROVISIONS OF THE CONTRACT DOCUMENTS.
2. THE GENERAL CONTRACTOR SHALL VERIFY THE DIMENSIONS AND SITE CONDITIONS BEFORE STARTING WORK. THE ARCHITECT/STRUCTURAL ENGINEER OF RECORD SHALL BE NOTIFIED OF ANY DISCREPANCY.
3. MATERIALS AND WORKMANSHIP SHALL CONFORM TO THE 2015 INTERNATIONAL BUILDING CODE (IBC).
4. THE CONTRACTOR SHALL COORDINATE THE ARCHITECTURAL, MECHANICAL, ELECTRICAL, PLUMBING AND CIVIL WORKS WITH THE STRUCTURAL CONTRACT DOCUMENTS. ARCHITECT/STRUCTURAL ENGINEER OF RECORD SHALL BE NOTIFIED OF ANY DISCREPANCIES OR OMISSIONS.
5. THE CONTRACTOR SHALL VERIFY THE FLOOR AND ROOF MOUNTED MECHANICAL EQUIPMENTS WEIGHTS, FLOOR AND/OR ROOF OPENING SIZES AND LOCATIONS WITH ARCHITECTURAL, STRUCTURAL, AND MECHANICAL DRAWINGS.
6. THE CONTRACTOR SHALL NOTIFY IN WRITING THE STRUCTURAL ENGINEER OF RECORD OF CONDITIONS ENCOUNTERED IN THE FIELD CONTRADICTORY TO THOSE SHOWN ON THE STRUCTURAL CONTRACT DOCUMENTS.
7. FOR DIMENSIONS NOT SHOWN ON THE STRUCTURAL CONTRACT DOCUMENTS SEE THE ARCHITECTURAL.
8. STRUCTURAL CONTRACT DRAWINGS SHALL NOT INCLUDE SHOP DRAWINGS, VENDOR DRAWINGS, OR ANY MATERIAL PREPARED AND SUBMITTED BY THE CONTRACTOR OR SUBCONTRACTOR.
9. REFERENCE TO STANDARD SPECIFICATIONS OF ANY TECHNICAL SOCIETY, ORGANIZATION OR ASSOCIATION TO CODES OF LOCAL OR STATE AUTHORITIES, SHALL MEAN THE EDITION OF THE REFERENCED CODE INDICATED IN THE BUILDING CODE NOTED ABOVE.
10. ANY CONTRACTOR INTENDING TO SUPPORT EQUIPMENT, PIPING, DUCT WORK, CRANES OR OTHER ITEMS WHICH SUBJECT THE ROOF OR FLOOR SYSTEMS TO CONCENTRATED LOADINGS NOT SPECIFICALLY INDICATED ON THESE STRUCTURAL DRAWINGS, MUST SUBMIT SHOP DRAWINGS, WEIGHTS, AND PROPOSED SUPPORT LOCATIONS TO THE ENGINEER FOR APPROVAL PRIOR TO ERECTION. ANY CONTRACTOR WHO ERECTS EQUIPMENT WITHOUT OBTAINING SUCH APPROVAL WILL BE REQUIRED EITHER TO REMOVE IT AND SUBMIT SHOP DRAWINGS OR STAND THE COST OF REQUIRED REINFORCEMENT OF MEMBERS.
11. THE CONTRACTOR SHALL BE RESPONSIBLE FOR INITIATING, MAINTAINING AND SUPERVISING ALL SAFETY PRECAUTIONS AND PROGRAMS IN CONNECTION WITH THE PERFORMANCE OF THE CONTRACT. THE CONTRACTOR SHALL GIVE NOTICES AND COMPLY WITH ALL APPLICABLE LAWS, ORDINANCES, RULES, REGULATIONS AND LAWFUL ORDER OF PUBLIC AUTHORITIES (ESPECIALLY OSHA) BEARING ON SAFETY OF PERSONS OR PROPERTY OR THEIR PROTECTION FROM DAMAGE, INJURY OR LOSS. THE CONTRACTOR SHALL NOT LOAD OR PERMIT ANY PART OF THE CONSTRUCTION SITE TO BE LOADED SO AS TO ENDANGER ITS SAFETY.
12. IN NO CASE SHALL STRUCTURAL ALTERATIONS OR WORK AFFECTING A STRUCTURAL MEMBER BE MADE, UNLESS APPROVED BY JOHNSON AND ASSOCIATES ENGINEERING IN WRITING.
13. THIS BUILDING IS DESIGNED AS AN ENCLOSED STRUCTURE. ALL EXTERIOR COMPONENTS (DOORS, WINDOWS, ETC.) MUST BE DESIGNED TO WITHSTAND THE WIND LOADINGS SPECIFIED FOR THE DESIGN OF COMPONENTS AND CLADDING IN THE APPLICABLE BUILDING CODE.
14. THE CONTRACT DOCUMENT DRAWINGS, GENERAL NOTES, AND SPECIFICATIONS SHALL GOVERN IN THE EVENT OF A CONFLICT WITH THE SPECIFICATIONS AND/OR CODE OF PRACTICE FOR AISC, ACI, SJI, OR OTHER STANDARDS.

FOUNDATION

1. THE FOUNDATION IS DESIGNED AS RECOMMENDED BY CARMICHAEL ENGINEERING, INC. IN THE PROJECT GEOTECHNICAL REPORT DATED AUGUST 28, 2021. THE STRUCTURAL ENGINEER OF RECORD IS NOT RESPONSIBLE FOR SUBSURFACE CONDITIONS ENCOUNTERED IN THE FIELD CONTRARY TO THOSE ASSUMED FOR DESIGN.
2. FOR BUILDING SITE PREPARATION REQUIREMENTS SEE PROJECT GEOTECHNICAL REPORT AND PROJECT SPECIFICATIONS.
3. FOUNDATION SHALL CONSIST OF SPREAD FOOTINGS DESIGNED TO BEAR ON SOIL CAPABLE OF SUPPORTING 1200 PSF.
4. FOOTING SUBGRADE SHALL BE COMPACTED TO A MINIMUM OF 95% MODIFIED PROCTOR DENSITY (ASTM D-1557) TO A DEPTH OF 12" BELOW BOTTOM OF FOOTING.

CONCRETE

1. CONCRETE WORK SHALL CONFORM TO THE ACI 318-14 AND CRSI STANDARDS.
2. PIPES OR DUCTS EXCEEDING ONE-THIRD THE SLAB OR WALL THICKNESS SHALL NOT BE PLACED WITHIN THE THICKNESS OF CONCRETE WALLS UNLESS SPECIFICALLY DETAILED. SEE MECHANICAL AND/OR ELECTRICAL DRAWINGS FOR LOCATION OF SLEEVES.
3. REFER TO ARCHITECTURAL DRAWINGS FOR MOLDS, GROOVES, ORNAMENTS, CLIPS, OR GROUNDS REQUIRED TO BE ENCASED IN CONCRETE AND FOR LOCATION AND DETAILS OF FLOOR FINISHES AND SLAB DEPRESSIONS.
4. CONSTRUCTION JOINTS IN CONCRETE BEAMS AND FRAMED SLABS SHALL BE PLACED AT MIDSPAN. ALL CONSTRUCTION JOINTS MUST BE KEYED WITH REINFORCING RUN CONTINUOUS THROUGH JOINTS.
5. AT COLUMN FOOTINGS, COLUMN ANCHOR RODS WITH TEMPLATE SHALL BE INSTALLED IN PROPER LOCATION PRIOR TO POURING THE FOOTING.
6. CONCRETE SHALL HAVE THE FOLLOWING MINIMUM 28 DAY COMPRESSIVE STRENGTH UTILIZING TYPE I CEMENT:

FOUNDATIONS AND SLABS ON GRADE	3000 PSI
CMU CELL FILL	3000 PSI
CONCRETE COLUMNS AND BEAMS	4000 PSI

REINFORCING STEEL

1. REINFORCING STEEL SHALL CONFORM TO ASTM A615-GRADE 60.
2. WELDED WIRE FABRIC SHALL CONFORM TO ASTM A185 AND HAVE A MINIMUM SIDE LAP OF 8 INCHES.
3. REINFORCEMENT SHALL BE SPLICED ONLY AS SHOWN OR NOTED IN THE STRUCTURAL CONTRACT DOCUMENTS.

REINFORCING STEEL (CONT.)

4. ALL REINFORCING LAP SPLICES SHALL BE A MINIMUM OF 36 BAR DIAMETERS IN LENGTH FOR REINFORCED CONCRETE. LAP SPLICES FOR REINFORCED MASONRY SHALL BE A MINIMUM OF 48 BAR DIAMETERS.
5. ALL REINFORCING STEEL AND ACCESSORIES SHALL BE DETAILED, FABRICATED, AND PLACED IN ACCORDANCE WITH THE LATEST EDITION OF THE ACI MANUAL AND MANUAL OF STANDARD PRACTICE FOR DETAILING REINFORCED CONCRETE STRUCTURES.
6. MINIMUM CONCRETE COVER FOR REINFORCING BARS SHALL BE IN CONFORMANCE WITH CHAPTER 20 OF ACI 318-14 EXCEPT AS OTHERWISE NOTED.
7. REINFORCING IN ALL CONCRETE WALLS, FOOTINGS AND BOND BEAMS SHALL BE CONTINUOUS AT INTERSECTIONS AND CORNERS. WHERE WALL FOOTINGS STEP, REINFORCING SHALL BE CONTINUOUS IN STEP.
8. PROVIDE 2-#5 EXTRA DIAGONAL REINFORCING BARS AT CORNERS OF ALL OPENINGS IN FRAMED SLABS AND CONCRETE WALLS. EXTEND BARS 2'-0" BEYOND EACH EDGE OF OPENING.
9. AT POURED CONCRETE WALLS, PIERS AND COLUMNS, DOWELS FOR VERTICAL REINFORCING BARS SHALL BE INSTALLED IN THEIR PROPER LOCATION PRIOR TO CONCRETE POUR OF THE FOOTINGS.

STRUCTURAL METALS

1. STRUCTURAL STEEL SHALL CONFORM TO ASTM A992 GRADE 50 EXCEPT ANGLES, CHANNELS, PLATES, RODS, ETC SHALL CONFORM TO ASTM A36 AND STRUCTURAL TUBING SHALL CONFORM TO ASTM A500 GRADE B (FY=46KSI). ANCHOR BOLTS SHALL BE F1554 GRADE 36.
2. STRUCTURAL STEEL SHALL BE FABRICATED AND ERECTED ACCORDING TO AISC 360-10, FOURTEENTH EDITION OF THE AISC MANUAL AND SPECIFICATIONS. CONTRACT DOCUMENTS SHALL GOVERN IN THE EVENT OF CONFLICT WITH THE AISC ASPECIFICATION FOR THE DESIGN, FABRICATION, AND ERECTION OF STRUCTURAL STEEL FOR BUILDINGS.
3. FABRICATOR SHALL PREPARE SHOP DRAWINGS IN ACCORDANCE WITH THE CONTRACT DOCUMENTS. CONNECTIONS SHALL BE DETAILED BASED ON THE DESIGN INFORMATION PROVIDED IN THE CONTRACT DOCUMENTS. DEVIATION FROM THE CONNECTION DETAILS DEPICTED IN THE CONTRACT DOCUMENTS SHALL NOT BE PERMITTED WITHOUT WRITTEN PERMISSION FROM THE STRUCTURAL ENGINEER OF RECORD. THE STRUCTURAL ENGINEER OF RECORD SHALL BE COMPENSATED BY THE FABRICATOR FOR THE COST INVOLVED IN THE REDESIGN OF CONNECTIONS FOR THE CONVENIENCE OF THE FABRICATOR.
4. UNLESS INDICATED OTHERWISE, ALL BEAM CONNECTIONS SHALL BE AISC DOUBLE ANGLE PER TABLES 10-1 THRU 10-3 OF THE ASD MANUAL OF STEEL CONSTRUCTION. UNLESS OTHERWISE INDICATED, BOLTED CONNECTIONS SHALL UTILIZE MAXIMUM NUMBER OF ROWS AT 3" STANDARD BOLT SPACING.
5. BOLTED CONNECTIONS SHALL BE NON-SLIP CRITICAL BEARING TYPE CONNECTIONS (THREADS EXCLUDED FROM THE SHEAR PLANE) USING 3/4" DIAMETER A-325 BOLTS. SLOTTED HOLES ARE PERMITTED ONLY WHERE THE DIRECTION OF THE LOAD IS NORMAL TO THE AXIS OF THE SLOT. BOLTED CONNECTIONS FOR TRUSS JOINTS, HANGERS AND DIAGONAL BRACING (AS OCCURS) SHALL BE SLIP CRITICAL.
6. USE PREQUALIFIED WELDED JOINTS PER AISC AND THE STRUCTURAL WELDING CODE OF THE AMERICAN WELDING SOCIETY. NON QUALIFIED JOINTS SHALL BE QUALIFIED BY THE FABRICATOR PRIOR TO FABRICATION.
7. SHOP PAINT FOR STRUCTURAL STEEL SHALL BE TNEMEC 10-99. APPLY TO STRUCTURAL STEEL TO A MINIMUM DRY FILM THICKNESS OF 2.5 MILS. DO NOT PAINT STEEL TO BE FIRE-PROOFED WITH SPRAYED ON CEMENTITIOUS MATERIALS. DO NOT PAINT STEEL SURFACES TO BE EMBEDDED IN CONCRETE.
8. FRAME ALL ROOF OPENINGS 12 INCHES SQUARE OR LARGER WITH 3-1/2" X 3-1/2" X 1/4" ANGLE FRAME ALL AROUND, UNLESS NOTED OTHERWISE.
9. ALL STRUCTURAL STEEL THAT IS OUTSIDE OF CONDITIONED SPACE OR WHICH IS EXPOSED TO THE EXTERIOR ENVIRONMENT SHALL BE GALVANIZED.
10. ALL TUBE STEEL CONNECTIONS SHALL BE MADE WITH FILLET WELD ALL AROUND, WITH WELD AND CONNECTION CONFORMING TO THE PROVISIONS FOR ARCHITECTURALLY EXPOSED STRUCTURAL STEEL, PER THE AISC MANUAL.
11. METAL ROOF DECK SHALL BE 1 1/2" DEEP 22 GAGE PAINTED (GALVANIZED) TYPE B AS MANUFACTURED BY VULCRAFT OR APPROVED EQUAL. DECK SHALL HAVE A MINIMUM SECTION MODULUS OF 0.186 IN^3/FT. OF WIDTH.
12. ALL STEEL DECK SHALL BE CAPABLE OF SUPPORTING THE DESIGN LOADS PROVIDED IN THE CONTRACT DOCUMENTS. THE DECK SUPPLIER SHALL SUBMIT CALCULATIONS AND/OR LOAD TABLES WITH THE SHOP DRAWINGS. THESE CALCULATIONS AND/OR LOAD TABLES SHALL BE SEALED BY AN ENGINEER LICENSED IN THE PROJECT STATE. THE STRUCTURAL ENGINEER OF RECORD'S REVIEW OF SUCH MATERIALS SHALL NOT RELIEVE THE DECK SUPPLIER AND ITS LICENSED ENGINEER OF THE SOLE RESPONSIBILITY FOR THE ACCURACY OF LOAD TABLES AND/OR CALCULATIONS SUBMITTED FOR REVIEW WITH THE SHOP DRAWINGS.
13. METAL ROOF DECK SHALL CONFORM TO ASTM A653, WITH A MINIMUM YEILD STRENGTH OF 33 KSI.

COLD FORMED STEEL FRAMING

1. ALL COLD FORMED STEEL FRAMING SHALL BE MADE OF THE TYPE, SIZE, GAUGE AND SPACING SHOWN ON THE DRAWINGS AND SHALL BE MANUFACTURED BY UNIMAST INCORPORATED (OR APPROVED EQUAL).
2. ALL STRUCTURAL MEMBERS SHALL BE DESIGNED IN ACCORDANCE WITH AMERICAN IRON AND STEEL INSTITUTE (AISI) ASPECIFICATIONS FOR DESIGN OF COLD-FORMED STEEL STRUCTURAL MEMBERS, S100-12.
3. ALL STRUCTURAL MEMBERS SHALL BE FORMED FROM CORROSION-RESISTANT STEEL, CORRESPONDING TO THE REQUIREMENTS OF ASTM A653-94 AND SHALL BE ZING COATED MEETING ASTM A924. STRUCTURAL MEMBERS SHALL BE FORMED FROM THE FOLLOWING GRADE OF MATERIAL:

   YIELD STRENGTH: 33,000 PSI (33 KSI) FOR ALL CR RUNNERS AND 20-GA. AND 18-GA. STUD OR JOIST MEMBERS, 50,000 PSI (50KSI) FOR 16-GA., 14-GA, AND 12-GA. STUD OR JOIST MEMBERS.
4. FASTENING OF COMPONENTS SHALL BE WITH SELF-DRILLING SCREWS OR BY WELDING. SCREWS AND WELDS SHALL BE OF SUFFICIENT SIZE TO ENSURE THE STRENGTH OF THE CONNECTION. WIRE TYPING OF COMPONENTS SHALL NOT BE PERMITTED. ALL WELDS SHALL BE TOUCHED-UP WITH ZINC-RICH PAINT.
5. SPLICES IN FRAMING COMPONENTS, OTHER THAN RUNNER TRACK SHALL NOT BE PERMITTED.
6. ABUTTING LENGTHS OF RUNNER SHALL BE BUTT-WELDED, SPLICED OR EACH LENGTH SECURELY ANCHORED TO A COMMON STRUCTURAL ELEMENT. RUNNERS SHALL BE SECURELY ANCHORED TO THE SUPPORTING STRUCTURE AS SHOWN ON THE DRAWINGS.
7. COLD FORMED STEEL TRUSSES SHALL HAVE SYMMETRICAL TOP AND BOTTOM CHORD AND WEB MEMBERS AS DESIGNED BY ALPINE TRUSS STEEL OR APPROVED EQUAL. TRUSS TOP CHORD MEMBERS SHALL HAVE A MINIMUM THICKNESS OF 16 GA.

COLD FORMED STEEL FRAMING (CONT.)

8. COLD FORMED STEEL TRUSSES SHALL BE DESIGNED, DETAILED AND FABRICATED IN ACCORDANCE WITH THE PROCEDURES AND REQUIREMENTS OUTLINED IN THE LATEST EDITION OF THE "COLD FORMED STEEL DESIGN MANUAL" AND/OR THE "SPECIFICATIONS FOR THE DESIGN OF COLD FORMED STEEL STRUCTURAL MEMBERS".
9. THE COLD FORMED STEEL TRUSSES SHALL BE SIZED AND DETAILED TO FIT THE DIMENSIONS AND LOADS INDICATED. TRUSS MANUFACTURER SHALL PROVIDE DESIGN FOR ALL TRUSSES, SIGNED AND SEALED BY AN ENGINEER LICENSED IN THE PROJECT STATE. SHOP DRAWINGS SHALL BE PROVIDED INCLUDING A PLACING PLAN WITH MARK NUMBERS INDICATING LOCATIONS. DESIGN SHEETS SHALL INDICATE BEARING POINT LOADS (GRAVITY AND UPLIFT), TRUSS MARK NUMBERS, AND PROJECT IDENTIFICATION. ENGINEER'S SEAL SHALL BE ORIGINAL WITH RAISED IMPRINT, AND CONTAIN ENGINEER'S SIGNATURE AND DATE. TRUSS JOINTS, SPACINGS, LOCATIONS, OR SIZES INDICATED ON THE PLANS ARE TO BE CONSIDERED SCHEMATIC AND ARE TO BE VERIFIED BY THE MANUFACTURER. HOWEVER, CHANGES SHALL NOT BE MADE WITHOUT PRIOR WRITTEN APPROVAL. BRIDGING AND BRACING OF THE TRUSSES SHALL BE PROVIDED AS REQUIRED BY THE TRUSS DESIGNER.
10. WELDED TRUSS CONNECTIONS TO SUPPORTING CONSTRUCTION AND JACK TRUSS TO HIP JACK OR GIRDER TRUSS CONNECTIONS SHALL BE DESIGNED AND PROVIDED BY THE TRUSS DESIGNER.

MASONRY

1. MATERIAL AND WORKMANSHIP SHALL BE IN ACCORDANCE WITH TMS 402/602 - 2013 "BUILDING CODE REQUIREMENTS FOR MASONRY STRUCTURES AND SPECIFICATION FOR MASONRY STRUCTURES."
2. MORTAR SHALL CONFORM TO ASTM C270 AND GROUT SHALL CONFORM TO ASTM C476, STANDARD SPECIFICATION FOR MORTAR AND GROUT FOR REINFORCED MASONRY.
3. CONCRETE MASONRY UNITS SHALL BE GRADE N, IN ACCORDANCE WITH ASTM C90, STANDARD SPECIFICATIONS FOR HOLLOW LOAD-BEARING CONCRETE MASONRY UNITS.
4. THE MINIMUM COMPRESSIVE STRENGTH OF MASONRY ASSEMBLIES AT 28 DAYS SHALL BE 1900 PSI ON THE NET SECTION (MORTAR BED AREA). (F=M = 1500 PSI)
5. ALL VERTICAL REINFORCING STEEL BARS IN CMU WALLS SHALL BE DOWELED TO THE CONCRETE FOUNDATION.
6. ALL CMU REINFORCING STEEL BARS SHALL BE CONTINUOUS WITH LAP SPLICE LENGTHS CONFORMING TO NOTE ABOVE.
7. ALL OPENINGS IN CMU WALLS SHALL BE REINFORCED ON EACH SIDE AND TOP AND BOTTOM WITH A MINIMUM OF 1-#5 BAR.
8. ALL CELLS ADJACENT TO DOORS, WINDOWS, OPENINGS, CORNERS, END OF WALLS OR UNDER CONCENTRATED LOADS SHALL CONTAIN VERTICAL REINFORCING AND SHALL BE FILLED WITH 3000 PSI CONCRETE.
9. ALL CMU ELEMENTS SHALL BE ADEQUATELY BRACED TO PROVIDE STABILITY UNTIL THE ENTIRE STRUCTURE IS COMPLETE AND TO PREVENT DAMAGE DURING CONSTRUCTION, ESPECIALLY DUE TO BACKFILLING AND SOIL COMPACTION OPERATIONS.
10. ALL VERTICAL REINFORCING SHALL BE CONTINUOUS THROUGH ALL WALL BEAMS AND SHALL BE ANCHORED IN BEAMS AT THE TOP OF WALLS.
11. CONTINUOUS CONCRETE FILLED BLOCK BOND BEAMS SHALL BE PROVIDED AT THE TOP OF ALL WALLS AND UNDER FLOORS OR ROOFS. UNLESS OTHERWISE INDICATED BOND BEAMS SHALL BE REINFORCED WITH 2-#5 CONTINUOUS.
12. ALL VERTICAL REINFORCING IN ALL WALLS SHALL BE INSTALLED AS FOLLOWS UNLESS NOTED OTHERWISE:
    - A. PROVIDE CLEAN-OUT SPACE AT BOTTOM OF CELL TO BE REINFORCED AND FILLED (AT LOCATION OF REINFORCING STEEL DOWEL IN FOUNDATIONS OR PREVIOUS CONCRETE PLACEMENT).
    - B. COMPLETELY CLEAN OUT AND FLUSH CELL TO BE FILLED.
    - C. INSTALL VERTICAL STEEL AND TIE TO DOWEL AT BOTTOM AND TIE TO PLACE AT TOP.
    - D. CLOSE CLEAN-OUT OPENING, AND FILL WITH 3000 PSI CONCRETE.
13. ALL MORTAR FOR BLOCK MASONRY SHALL BE TYPE S EXCEPT AS OTHERWISE NOTED.
14. FILL ALL BLOCK CELLS WITH CONCRETE FROM TOP OF FOOTINGS TO FINISH FLOOR ELEVATION EXCEPT AS INDICATED OTHERWISE.
15. PROVIDE CONTINUOUS HORIZONTAL NO. 9 GAGE TRUSS TYPE JOINT REINFORCING AT 16" O.C. IN ALL BLOCK MASONRY WALLS EXCEPT AS OTHERWISE NOTED.
16. WHERE INTERIOR MASONRY WALLS ON THICKENED SLABS ABUT MASONRY WALLS ON FOOTINGS, RAKE VERTICAL JOINT EACH FACE AND SEAL WITH ELASTOMERIC FILLER.
17. PROVIDE CONTROL JOINTS IN ALL BLOCK MASONRY WALLS. SEE SPECIFICATIONS FOR SPACING. COORDINATE ALL JOINT LOCATIONS WITH ARCHITECT.
18. ALL MASONRY SHALL BE LAID IN RUNNING BOND UNLESS SPECIFICALLY NOTED OTHERWISE ON THE STRUCTURAL CONTRACT DRAWINGS. IF MASONRY BOND OTHER THAN RUNNING BOND IS UTILIZED, HORIZONTAL BOND BEAMS SHALL BE CONSTRUCTED IN THE WALLS AT A MAXIMUM SPACING OF 48 INCHES ON CENTER.

STRUCTURAL SUBMITTALS

1. FURNISH ONE ELECTRONIC COPY OF ALL SHOP DRAWINGS AND SUBMITTALS.
2. SEE CONTRACT SPECIFICATIONS FOR ADDITIONAL SUBMITTAL REQUIREMENTS AND PROCEDURES.
3. REPRODUCTION OF CONTRACT DOCUMENTS FOR ERECTION AND/OR SHOP DRAWINGS WILL NOT BE PERMITTED.
4. REVIEW OF SUBMITTALS AND/OR SHOP DRAWINGS BY THE STRUCTURAL ENGINEER OF RECORD DOES NOT RELIEVE THE CONTRACTOR OF THE SOLE RESPONSIBILITY TO REVIEW AND CHECK SHOP DRAWINGS PRIOR TO SUBMITTAL TO THE STRUCTURAL ENGINEER OF RECORD. THE CONTRACTOR REMAINS SOLELY RESPONSIBLE FOR ERRORS AND OMISSIONS ASSOCIATED WITH THE PREPARATION OF SHOP DRAWINGS AS THEY PERTAIN TO MEMBER SIZES, DETAILS, AND DIMENSIONS SPECIFIED IN THE CONTRACT DOCUMENTS. CONTRACTOR ALSO SHALL BE RESPONSIBLE FOR MEANS, METHOD, TECHNIQUES, SEQUENCES, AND PROCEDURES OF CONSTRUCTION. SEE SPECIFIC PROVISIONS IN THE CONTRACT DOCUMENTS DEALING WITH THE APPROPRIATE DESIGN RESPONSIBILITIES OF CONTRACTORS, SUBCONTRACTORS, AND SUPPLIERS.

STRUCTURAL SUBMITTALS (CONT.)

5. IN THE EVENT THAT JOHNSON & ASSOCIATES ENGINEERING REVIEWS SUBMITTALS (AS A COURTESY TO THE CONTRACTOR TO REDUCE THE TIME PRIOR TO THE START OF FABRICATION) WHICH HAVE NOT FIRST BEEN REVIEWED AND APPROVED BY THE CONTRACTOR, SUCH REVIEW SHALL NOT RELIEVE THE CONTRACTOR OF HIS RESPONSIBILITY TO PERFORM REVIEW AND APPROVE ALL SUCH SUBMITTALS, NOR WILL IT CREATE RESPONSIBILITY OR LIABILITY ON THE PART OF JOHNSON & ASSOCIATES ENGINEERING AS TO THE CONTENTS, ACCURACY OR COMPLETENESS OF SUCH SHOP DRAWINGS EXCEPT AS MAY BE SPECIFICALLY DESCRIBED IN THESE GENERAL NOTES. CONTRACTOR IS SOLELY RESPONSIBLE FOR REVIEW AND APPROVAL OF SHOP DRAWINGS AND OTHER SUBMITTALS, AND CONTRACTOR IS SOLELY RESPONSIBLE FOR ALL REQUIREMENTS OF THE WORK OF THE CONTRACTOR AS PROVIDED FOR IN THE CONTRACT DOCUMENTS
6. THE SER REVIEW OF SUBMITTALS WILL BE MADE FOR LIMITED PURPOSES AND IS SUBJECT TO THE LIMITATIONS AND DISCLAIMERS SET FORTH IN THESE GENERAL NOTES. THE JOHNSON AND ASSOCIATES ENGINEERING REVIEW DOES NOT INVOLVE OR INCLUDE:
    - A. REVIEW OF SUBMITTAL DIMENSIONS AND QUANTITIES.
    - B. ACCEPTANCE OR ASSUMPTION OF ANY RESPONSIBILITY TO REVIEW, ANALYZE OR EVALUATE ANY SUBMITTALS INCLUDING SHOP DRAWINGS PROVIDED TO JOHNSON AND ASSOCIATES ENGINEERING OR ACCEPTANCE OR ASSUMPTION OF ANY PART OF CONTRACTOR'S RESPONSIBILITIES (WHICH INCLUDE THE CONTRACTOR'S RESPONSIBILITY TO REVIEW AND APPROVE SUBMITTAL), WHETHER OR NOT THE JOHNSON AND ASSOCIATES ENGINEERING REVIEW WAS MADE PRIOR TO THE REVIEW AND APPROVAL OF THE CONTRACTOR.
    - C. ANALYSIS, VERIFICATION OR SUBSTANTIATION OF EQUIPMENT OR SYSTEM INSTALLATION OR PERFORMANCE OF EQUIPMENT OR SYSTEMS.
    - D. REVIEW, EVALUATION OR APPROVAL OF PROJECT SAFETY PRECAUTIONS OR SAFETY TRAINING.
    - E. REVIEW, EVALUATION OR APPROVAL OF CONSTRUCTION MEANS, METHODS, TECHNIQUES, PROCEDURES OR SEQUENCES.

   JOHNSON AND ASSOCIATES ENGINEERING REVIEW OF A SPECIFIC ITEM DOES NOT INCLUDE OR INDICATE OR CONSTITUTE REVIEW OF A GROUP OR AN ASSEMBLY OF WHICH THE ITEM IS A COMPONENT.

   THE CONTRACTOR MUST NOTIFY JOHNSON AND ASSOCIATES ENGINEERING, IN WRITING, RELATIVE TO ANY DEVIATION FROM THE CONTRACT DOCUMENTS, WHICH APPEARS IN THE SHOP DRAWINGS, SAMPLES, AND PRODUCT DATA. APPROVAL OF THE SUBMITTAL CONTAINING SUCH DEVIATION DOES NOT CONSTITUTE APPROVAL OF THE DEVIATION. APPROVAL OR REJECTION OF THE DEVIATION WILL ONLY BE PROVIDED BY JOHNSON AND ASSOCIATES ENGINEERING IN A SEPARATE WRITTEN COMMUNICATION TO THE CONTRACTOR. JOHNSON AND ASSOCIATES ENGINEERING IS NOT RESPONSIBLE FOR DISCOVERY OF DEVIATIONS NOT COMMUNICATED BY THE CONTRACTOR.

STRUCTURAL SUBMITTALS: STRUCTURAL STEEL, METAL ROOF DECKING, COLD FORMED STEEL TRUSSES, CONCRETE REINFORCING BARS, ANCHOR RODS AND CONCRETE MIX DESIGNS

1. THE FOLLOWING SUBMITTALS MUST BE MADE TO THE STRUCTURAL ENGINEER OF RECORD:
    - A. ERECTION DRAWINGS, FABRICATION DRAWINGS, COMPONENT DETAILS, AND CONNECTION DETAILS.
    - B. CALCULATIONS FOR ALL COMPONENTS SIZED BY THE FABRICATOR'S SPECIALTY DESIGN ENGINEER.
2. THE STRUCTURAL SUBMITTALS FOR THE METAL ROOF DECKING AND THE COLD FORMED STEEL TRUSSES SHALL BEAR THE IMPRESSED SEAL AND SIGNATURE OF THE SPECIALTY DESIGN ENGINEER LICENSED IN THE PROJECT STATE.
3. THE PROJECT STRUCTURAL ENGINEER OF RECORD WILL REVIEW THE SUBMITTALS FOR INDICATION THAT HIS INTENT HAS BEEN UNDERSTOOD AND THAT THE SPECIFIED CRITERIA HAVE BEEN USED.

DESIGN LOADS

1. ROOF LIVE LOAD = 20 PSF
2. WIND LOADING CRITERIA (PER ASCE 7-10)

BUILDING RISK CATEGORY		=	III
BASIC WIND SPEED:	V(ULT)	=	128 MPH
EXPOSURE CATEGORY:		=	C
INTERNAL PRESSURE COEFF.:	GCPI	=	+/- 0.18

COMPONENTS & CLADDING

LOCATION	TRIBUTARY AREA	DESIGN WIND PRESSURE (PSF)
ROOF (CORNER ZONE) (3)	< 10 SF.	86 PSF
	10 - 20 SF.	86 PSF
	20 - 50 SF.	80 PSF
	50 - 100 SF.	74 PSF
	≥ 100 SF.	68 PSF
ROOF (EDGE ZONE) (2)	< 10 SF.	58 PSF
	10 - 20 SF.	58 PSF
	20 - 50 SF.	52 PSF
	50 - 100 SF.	49 PSF
	≥ 100 SF.	43 PSF
ROOF (INTERIOR ZONE) (1)	< 10 SF.	34 PSF
	10 - 20 SF.	34 PSF
	20 - 50 SF.	34 PSF
	50 - 100 SF.	31 PSF
	≥ 100 SF.	31 PSF

DESIGN LOADS (CONT.)

COMPONENTS & CLADDING

LOCATION	TRIBUTARY AREA	DESIGN WIND PRESSURE (PSF)
WALL (EDGE ZONE) (5)	< 10 SF.	49 PSF
	10 - 20 SF.	49 PSF
	20 - 50 SF.	46 PSF
	50 - 100 SF.	43 PSF
	≥ 100 SF.	40 PSF
WALL (INTERIOR ZONE) (4)	< 10 SF.	40 PSF
	10 - 20 SF.	40 PSF
	20 - 50 SF.	37 PSF
	50 - 100 SF.	37 PSF
	≥ 100 SF.	34 PSF

COMPONENTS AND CLADDING PRESSURES SHOWN IN THE TABLES ABOVE ARE STRENGTH DESIGN (ULTIMATE) PRESSURES PER THE ASCE 7-10. USE OF THESE PRESSURES FOR ALLOWABLE STRESS DESIGN (ASD) SHALL BE IN ACCORDANCE WITH THE LOAD COMBINATIONS SHOWN IN THE ASCE 7-10.

PREENGINEERED SYSTEMS

1. THE DESIGN OF PREENGINEERED SYSTEMS SPECIFIED IN THE CONTRACT DOCUMENTS WHICH ARE DESIGNED/ENGINEERED BY OTHERS IS THE SOLE RESPONSIBILITY OF THE SUPPLIER AND ITS DESIGN ENGINEER, LICENSED IN THE PROJECT STATE. SUBMITTALS OF SUCH SYSTEMS TO THE STRUCTURAL ENGINEER OF RECORD SHALL BE REVIEWED FOR CONFORMANCE WITH THE CONTRACT DOCUMENTS WITH REGARD TO THE ARRANGEMENT, AND/OR SIZES OF MEMBERS SHOWN ON THE CONTRACT DOCUMENTS AND TO INSURE CORRECT INTERPRETATION OF THE DESIGN INFORMATION INCLUDED IN THE CONTRACT DOCUMENTS. SUCH REVIEW BY THE STRUCTURAL ENGINEER OF RECORD SHALL NOT IMPLY ANY RESPONSIBILITY FOR THE ACTUAL DESIGN OF SUCH SYSTEMS. THE CONTRACTOR SHALL BE RESPONSIBLE FOR DIMENSIONAL ACCURACY AND CONFORMANCE WITH THE INFORMATION CONTAINED IN THE CONTRACT DOCUMENTS.
2. SEE SPECIFIC SECTIONS OF GENERAL NOTES ABOVE AND SPECIFICATIONS FOR THE APPROPRIATE DESIGN RESPONSIBILITIES OF THE SUPPLIER AND ITS LICENSED ENGINEER.
3. THE CONTRACT DOCUMENT DRAWINGS, GENERAL NOTES, AND SPECIFICATIONS SHALL GOVERN IN THE EVENT OF A CONFLICT WITH THE SPECIFICATIONS AND/OR CODE OF PRACTICE FOR AISC, ACI, SJI OR OTHER STANDARDS.

ERECTION, BRACING AND FORMWORK

1. THE DESIGN, ADEQUACY AND SAFETY OF ERECTION BRACING, FORMWORK, SHORING, AND TEMPORARY SUPPORTS IS THE SOLE RESPONSIBILITY OF THE CONTRACTOR.
2. ANCHOR BOLTS AND FOUNDATIONS HAVE NOT BEEN DESIGNED FOR ANY CONDITION OF LOADING OTHER THAN THAT OF THE COMPLETED STRUCTURE. VERIFICATION OF ADEQUACY OF ANCHOR BOLT AND FOUNDATIONS TO RESIST ERECTION INDUCED FORCES IS SOLELY THE RESPONSIBILITY OF THE STEEL ERECTOR AND CONTRACTOR.
3. UNLESS OTHERWISE NOTED STEEL FRAMEWORKS FOR THIS PROJECT ARE CLASSIFIED PER AISC CODE OF STANDARD PRACTICE AS A "NON-SELF-SUPPORTING STEEL FRAME". PROVIDE TEMPORARY SUPPORT SYSTEMS NECESSARY TO SECURE ANY ELEMENT OR ELEMENTS OF THE STEEL FRAMING UNTIL ALL PERMANENT STEEL BRACING, DECKING AND/OR MASONRY WALLS ARE IN-PLACE AND CONNECTED TO THE STEEL FRAMEWORKS.

JOB SITE SAFETY

THE GENERAL CONTRACTOR IS SOLELY RESPONSIBLE FOR JOB SITE SAFETY AND FOR CONFORMANCE WITH THE HEALTH AND SAFETY PROVISIONS REQUIRED BY ANY REGULATORY AGENCIES. THE STRUCTURAL ENGINEER OF RECORD HAS NO AUTHORITY TO EXERCISE ANY CONTROL OVER ANY CONSTRUCTION CONTRACTOR, OR THEIR EMPLOYEES WITH THEIR WORK OR ANY HEALTH OR SAFETY PRECAUTIONS.

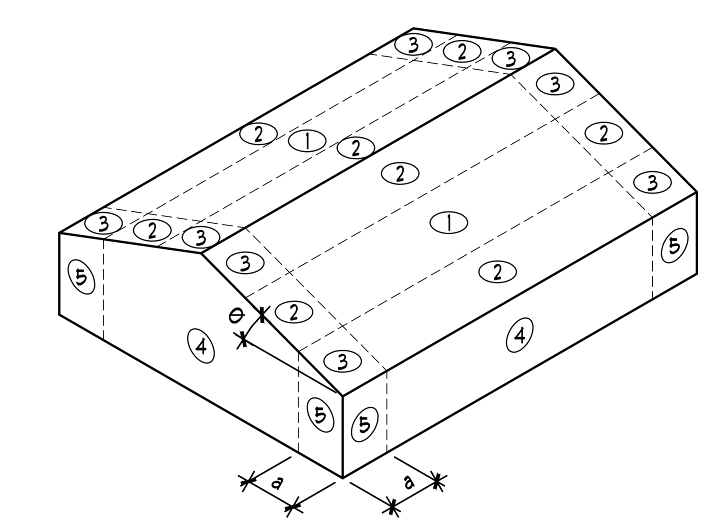

ISOMETRIC VIEW

SCHEMATIC GENERALIZED WIND ZONE IDENTIFICATION MODEL
(FOR USE WITH COMPONENT & CLADDING WIND PRESSURES)

JOHNSON & ASSOCIATES ENGINEERING
PROFESSIONAL CONSULTING ENGINEERS
jae@ja-eng.com

ALABAMA REGISTERED PROFESSIONAL ENGINEER No. 21832 BRADLEY B. JOHNSON

POLY, INC.
1935 Headland Avenue
Dothan, AL 36303
334-793-4700
102 Sunset Lane, Shalimar, FL 32579, 850-609-1100
234 Aquarius Dr., Ste. 116, Birmingham, AL 35209, 205-913-0330
WWW.POLY-INC.COM

Revision	Description	Date
1		

DESIGNED BY:	DRAWN BY:	DATE:
B.JOHNSON	P.GRANTHAM	FEBRUARY 2022

ENG / ARCH / SURVEYOR OF RECORD: BRADLEY B. JOHNSON, PE — REGISTRATION No. PE21832

Cert. of Auth. No.	AL	FL	GA
ARCHITECT	CA-0480	AA-C001551	001118
ENGINEER	CA-78-E	CA-1818	001118
SURVEY	CA-0018-LS	LB7527	LSF00132

These drawings are copyrighted and the property of Poly-Inc. Any use, partial or full reproduction is prohibited except by written Agreement with Poly-Inc.

NEW COTTONWOOD FIELDHOUSE / WEIGHTROOM BUILDING FOR HOUSTON COUNTY BOARD OF EDUCATION

GENERAL STRUCTURAL NOTES

SHEET No. S-001

PROJECT No. 26-394.02

BID DOCUMENTS

Poly, Inc. - C:\Users\pgran\AppData\Local\Temp\AcPublish_21024\S1.1-021422.dwg [S001] Last Printed: February 16, 2022 - 07:48am By: pgran

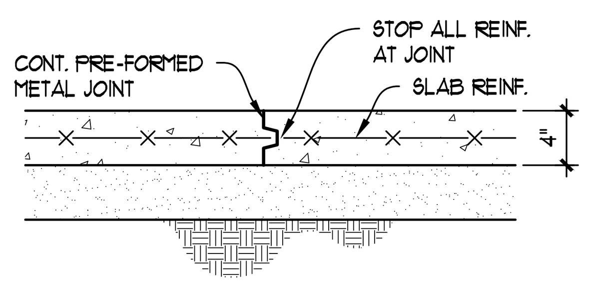

TYP. SLAB CONSTRUCTION JOINT DETAIL

DETAIL 1 / S002
SCALE: 3/4"=1'-0"

CONTRACTOR SHALL FIELD LOCATE AND INSTALL SLAB JOINTS. JOINTS SHALL BE INSTALLED IN GENERALLY ORTHOGONAL DIRECTIONS IN THE SPACES. SPACING OF JOINTS SHALL BE SUCH THAT THE AREA BOUNDED BY SLAB JOINTS SHALL NOT EXCEED 256 SQUARE FEET, AND THE DISTANCE BETWEEN TWO PARALLEL JOINTS SHALL NOT EXCEED 16 FEET. JOINTS SHALL BE EITHER SLAB CONSTRUCTION JOINTS OR SAW JOINTS, SEE DETAILS THIS SHEET (SHT. S002).

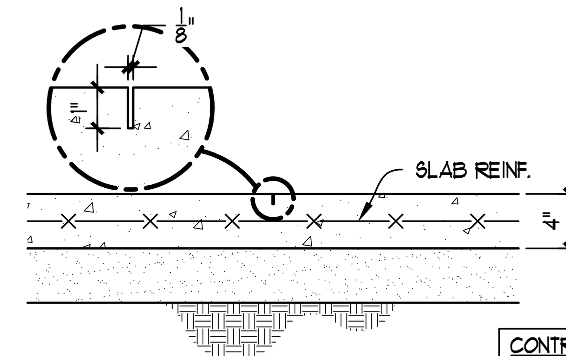

TYP. SLAB SAW JOINT DETAIL

CONTRACTOR NOTE: SAW JOINTS MUST BE SAWN WITHIN 1 HOUR OF CONCRETE INITIAL SET.

DETAIL 2 / S002
SCALE: 3/4"=1'-0"

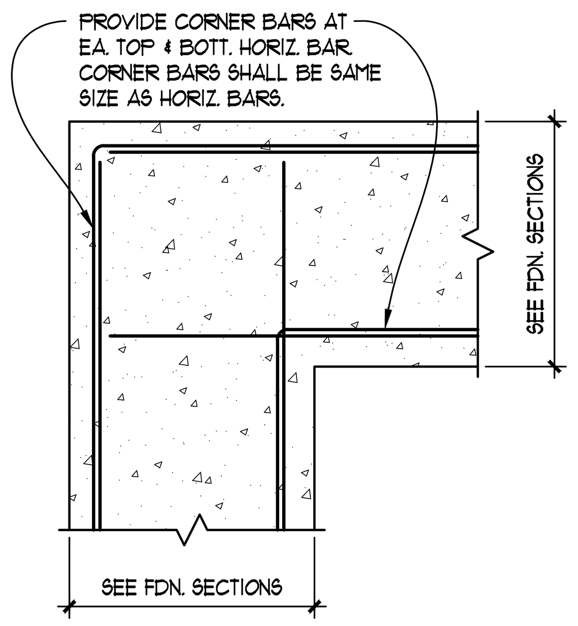

TYP. FOOTING CORNER DETAIL

DETAIL 3 / S002
SCALE: 3/4"=1'-0"

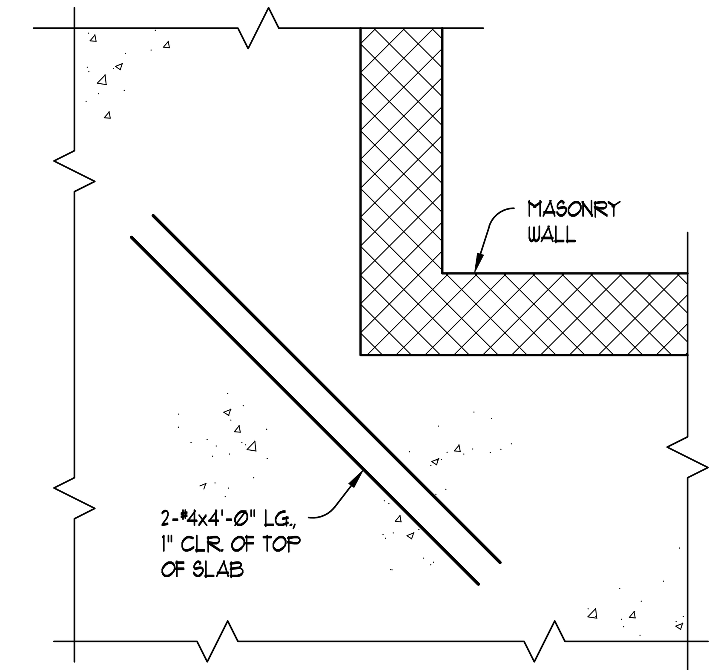

EXTRA REINFORCING AT RE-ENTRANT CORNERS OF SLABS ON GRADE

DETAIL 4 / S002
SCALE: 3/4"=1'-0"

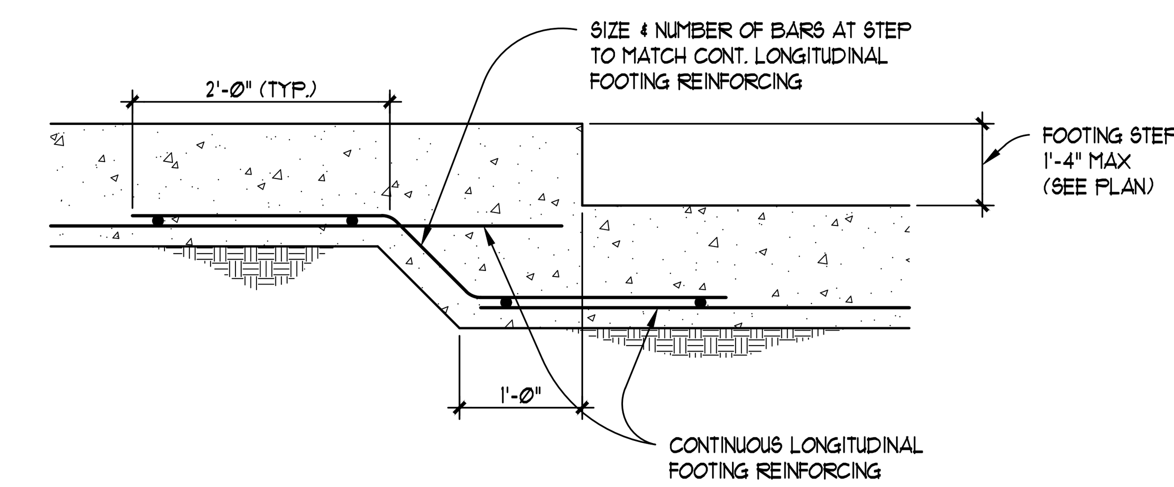

TYPICAL FOOTING STEP DETAIL

DETAIL 5 / S002
SCALE: 3/4"=1'-0"

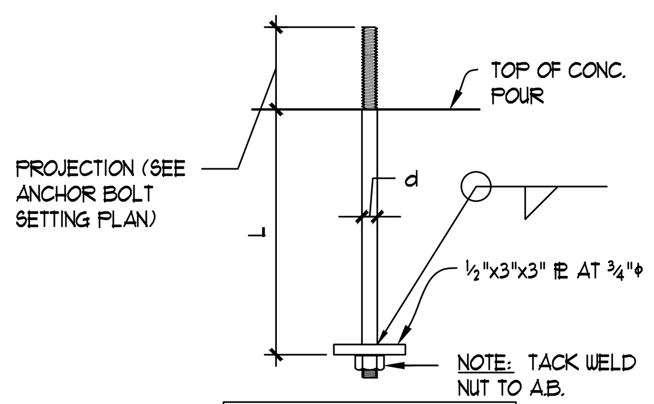

ANCHOR BOLT SCHEDULE	
d (IN)	L (IN)
3/4"	9"

NOTE: USE NUT & WASHER ON EA. ANCHOR BOLT

TYP. ANCHOR BOLT DETAILS

DETAIL 6 / S002
NOT TO SCALE

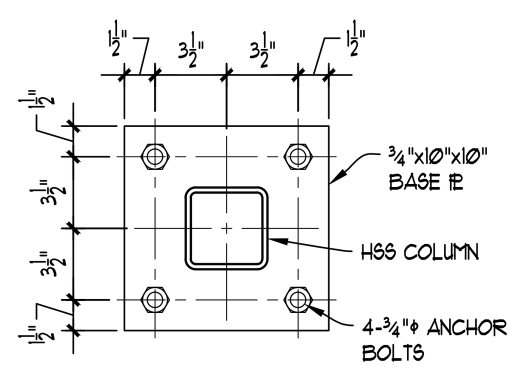

TYPE I BASE PL
(HSS 3 1/2x3 1/2 & HSS 4x4 COLMS.)

BASE PLATE DETAILS

DETAIL 7 / S002
SCALE: 1 1/2"=1'-0"

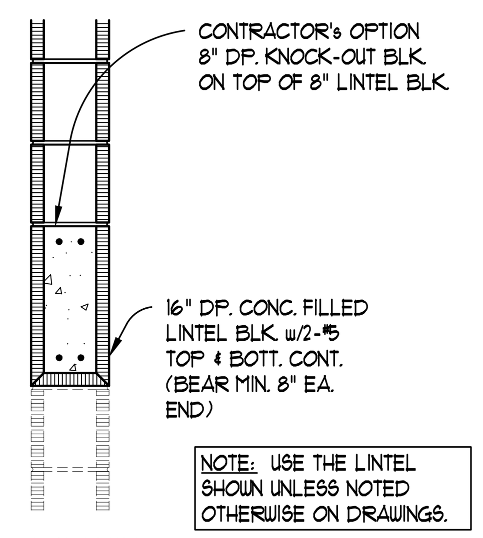

NOTE: USE THE LINTEL SHOWN UNLESS NOTED OTHERWISE ON DRAWINGS.

TYPICAL LINTEL

NOTES:

1. WHERE ADJACENT MASONRY OPNG'S ARE LESS THAN OR EQUAL TO 2'-8" APART, THE LINTEL INCLUDING REINFORCING SHALL BE CONTINUOUS ACROSS BOTH OPENINGS PLUS END BEARING.
2. IF OPENINGS EXIST. THAT DO NOT HAVE LINTEL SPECIFIED, CONTACT STRUCTURAL ENGINEER.
3. USE LINTELS SHOWN ABOVE AT TYP. CONDITIONS, U.N.O. ON DRAWINGS.

STRUCTURAL MASONRY WALL LINTEL DETAILS

DETAIL 9 / S002
SCALE: 3/4"=1'-0"

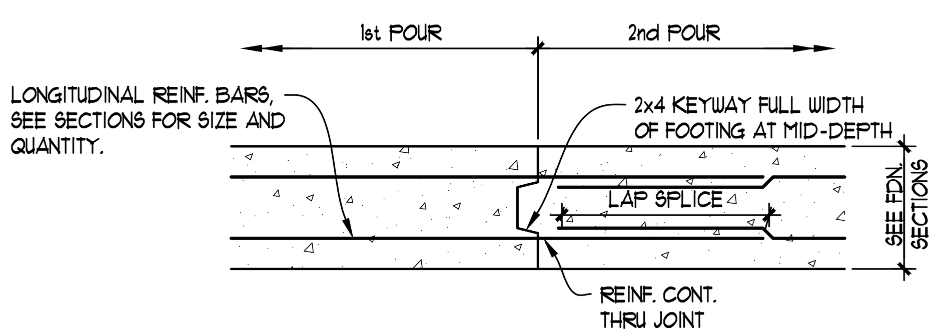

ELEVATION VIEW

TYP. FOOTING CONSTRUCTION JOINT

DETAIL 8 / S002
SCALE: 3/4"=1'-0"

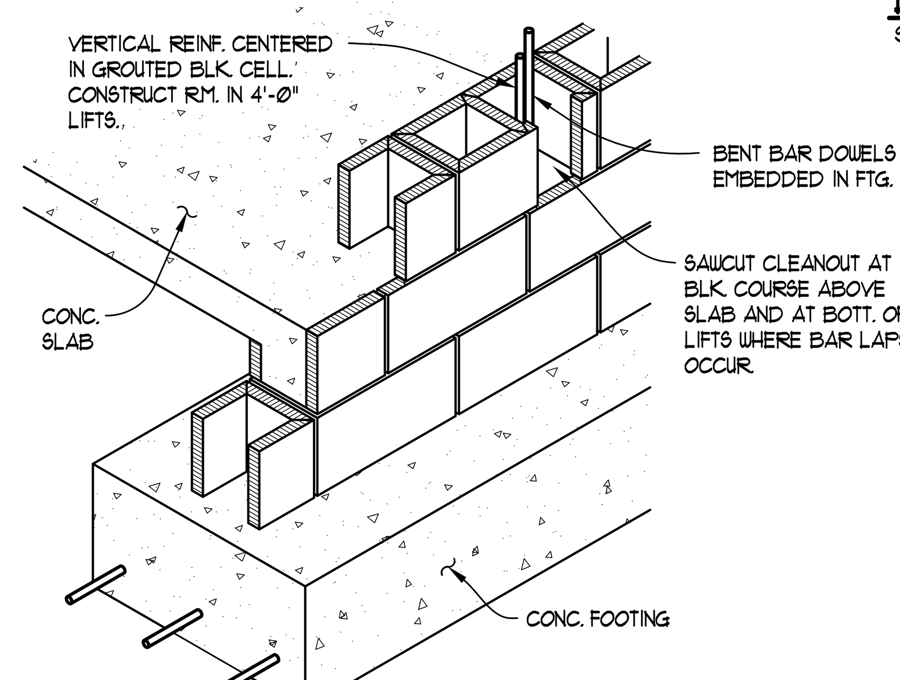

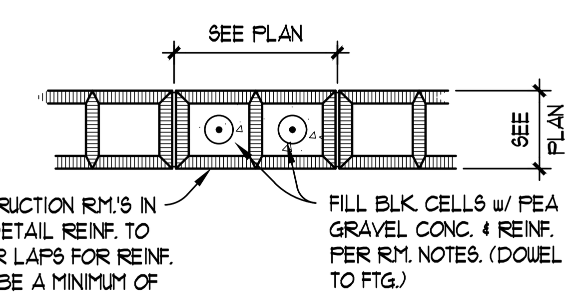

NOTE: CONSTRUCTION R.M.'S IN 4'-0" LIFTS. DETAIL REINF. TO SUIT. ALL BAR LAPS FOR REINF. MASONRY TO BE A MINIMUM OF 48 BAR DIAMETERS. (EXCEPT USE LAP SPLICE OF 72 BAR DIAMETERS WHEN LAP SPLICE IS LOCATED WITHIN MIDDLE THIRD OF WALL SPAN.)

PLAN VIEW

REINFORCED MASONRY DETAIL (R.M.)

DETAIL 10 / S002
SCALE: 3/4"=1'-0"

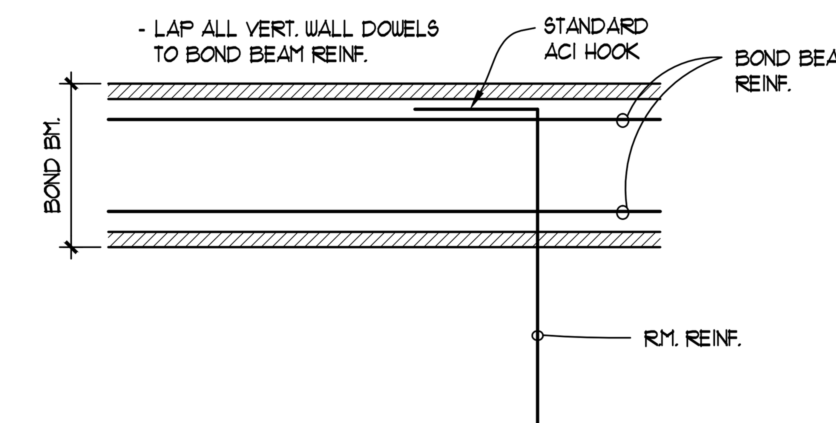

ELEVATION VIEW

VERT. R.M. LAP AT BOND BEAM REINF. - TOP OF WALL

DETAIL 11 / S002
SCALE: 3/4"=1'-0"

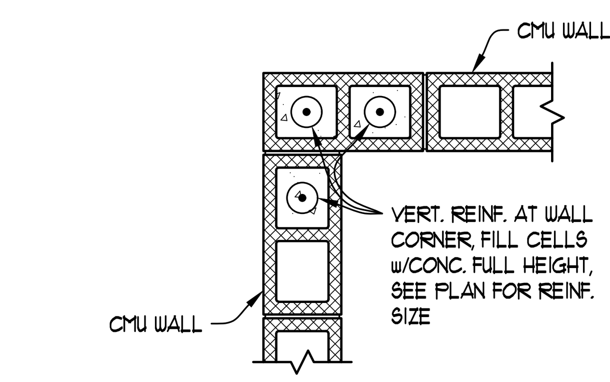

CORNER OF MASONRY WALLS

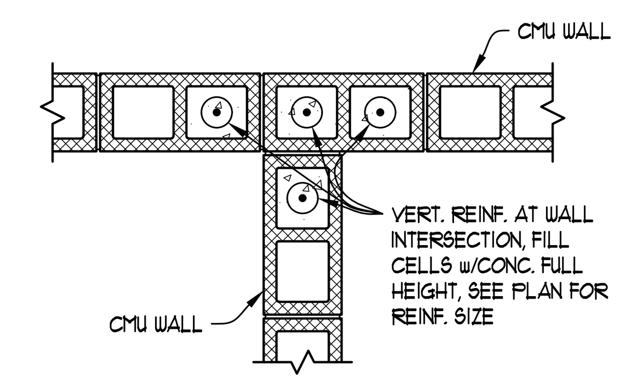

INTERSECTION OF MASONRY WALLS

PLAN VIEW

REINFORCED MASONRY (R.M.) DETAILS AT WALL CORNER & INTERSECTION

DETAIL 13 / S002
SCALE: 3/4"=1'-0"

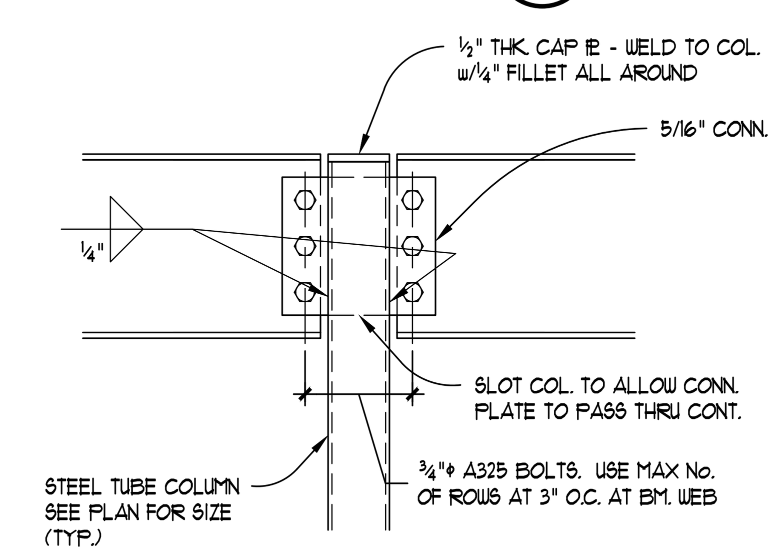

TYP. BEAM CONN. TO STEEL TUBE COLUMN DETAIL

DETAIL 12 / S002
SCALE: 3/4"=1'-0"

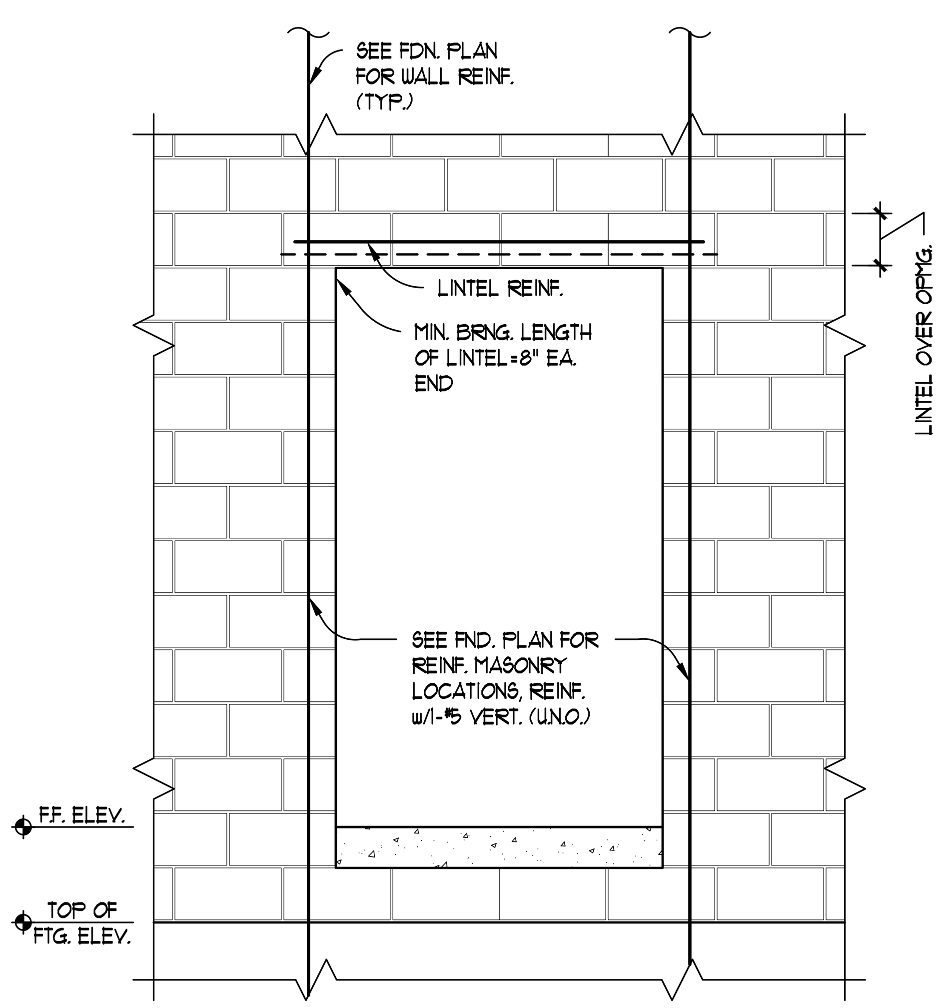

TYP. WALL REINFORCING AT EXTERIOR MASONRY OPENING

DETAIL 14 / S002
NOT TO SCALE

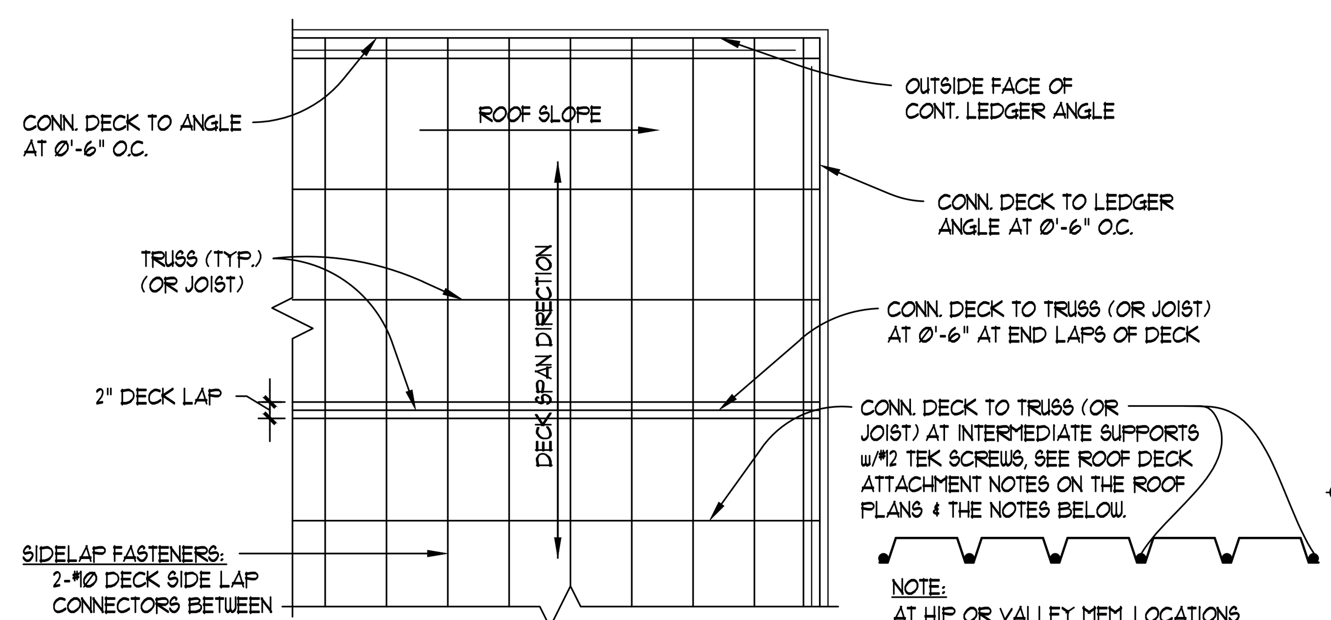

PLAN VIEW

DECK SUPPLIER NOTE:

DECK SUPPLIER SHALL PROVIDE CONTINUOUS BENT PLATES AT ALL LOCATIONS OF ROOF DECK SPAN DIRECTION CHANGES AND AT ALL DECK EDGES (HIPS, VALLEYS, RIDGES, RAKES, EAVES, ETC.). CONT. PLATE SHALL BE CAPABLE OF SUPPORTING THE ROOF TRIBUTARY AREA LOADING BETWEEN POINTS OF SUPPORT.

NOTE:
AT HIP OR VALLEY MEM. LOCATIONS WELD EA. RIB OF METAL DECK TO THE CONTINUOUS DECK SUPPORT BENT PLATE

ROOF ZONE	SCREW PATTERN
1	36/5
2, 3	36/7
	#12 TEK SCREWS

NOTES:
1. ROOF DECK ATTACHMENT BASED ON A MINIMUM TRUSS TOP CHORD OF 16-GA., 65 ksi MATERIAL. IF SUBMITTED ROOF TRUSS TOP CHORDS DO NOT MEET THESE MINIMUM REQUIREMENTS, TRUSS SPECIALTY ENGINEER SHALL PROVIDE REVISED ROOF DECK ATTACHMENT DETAILS DESIGNED TO MEET PROJECT DESIGN WIND VALUES.

TYP. ROOF DECK ATTACHMENT DIAGRAM

DETAIL 15 / S002
SCALE: 3/4"=1'-0"

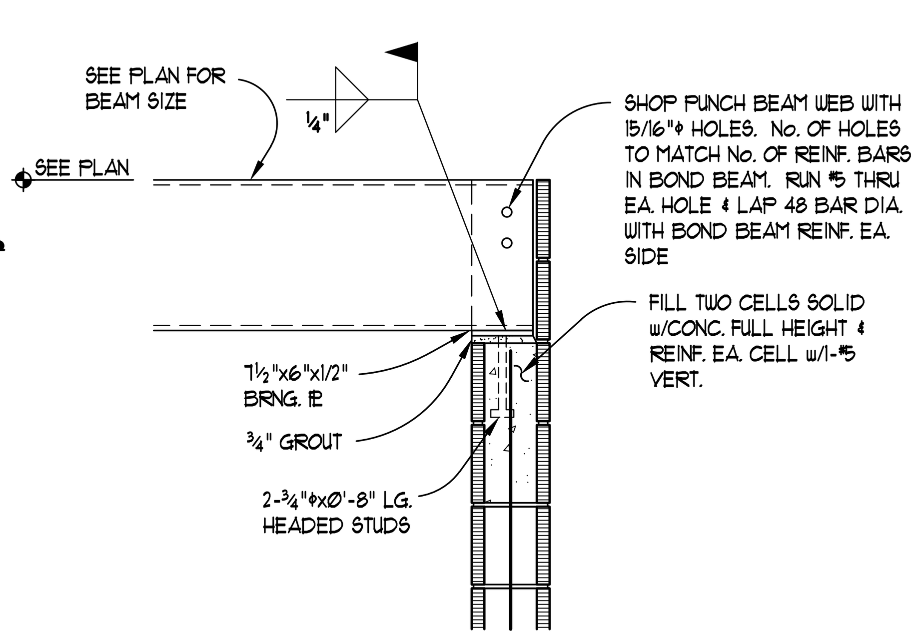

TYP. STEEL BEAM BEARING TRANSVERSE TO BLOCK WALL

DETAIL 16 / S002
SCALE: 3/4"=1'-0"

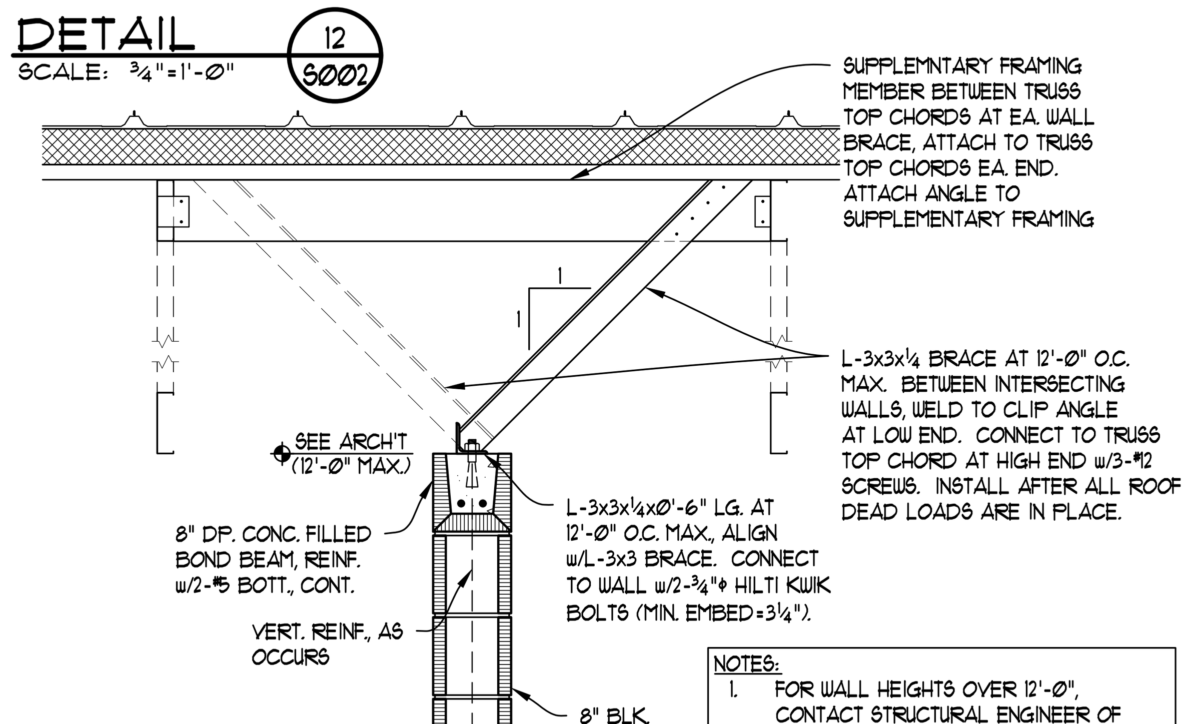

NOTES:
1. FOR WALL HEIGHTS OVER 12'-0", CONTACT STRUCTURAL ENGINEER OF RECORD FOR DESIGN.

TYP. NON-LOADBEARING MASONRY WALL CONN. TO ROOF STRUCTURE

DETAIL 17 / S002
SCALE: 3/4"=1'-0"

JOHNSON & ASSOCIATES ENGINEERING
PROFESSIONAL CONSULTING ENGINEERS
200 GROVE PARK LANE, #820
DOTHAN, ALABAMA 36305
(334) 671-4783 * (334) 793-6276 (fax)
jae@ja-eng.com

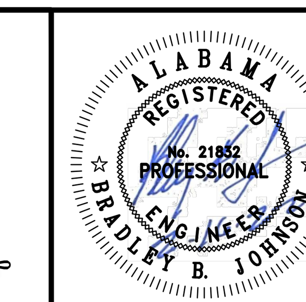

Date	Description	Revision
		1

NEW COTTONWOOD FIELDHOUSE / WEIGHTROOM BUILDING FOR HOUSTON COUNTY BOARD OF EDUCATION

DETAILS

POLY, INC.
1935 Headland Avenue
Dothan, AL 36303
334-793-4700
102 Sunset Lane, Shalimar, FL 32579, 850-609-1100
234 Aquarius Dr., Ste. 116, Birmingham, AL 35209, 205-913-0330
WWW.POLY-INC.COM

DESIGNED BY: B.JOHNSON
DRAWN BY: P.GRANTHAM
DATE: FEBRUARY 2022
ENG / ARCH / SURVEYOR OF RECORD: BRADLEY B. JOHNSON, PE
REGISTRATION No. PE21832

Cert. of Auth. No.	AL.	FL.	GA.
ARCHITECT	CA-0480	AA-C001551	001118
ENGINEER	CA-78-E	CA-1818	001118
SURVEY	CA-0018-LS	LB7527	LSF00132

These drawings are copyrighted and the property of Poly-Inc. Any use, partial or full reproduction is prohibited except by written Agreement with Poly-Inc.

SHEET No. S-002
PROJECT No. 26-394.02

BID DOCUMENTS
FINAL DESIGN SUBMITTAL

Poly, Inc. - C:\Users\pgran\AppData\Local\Temp\AcPublish_21024\S1.1-021422.dwg [S002] Last Printed: February 16, 2022 - 07:48am By: pgran

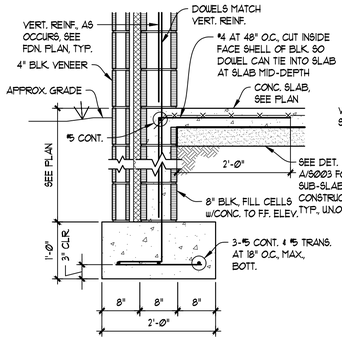

SECTION 1 S003
SCALE: 3/4"=1'-0"

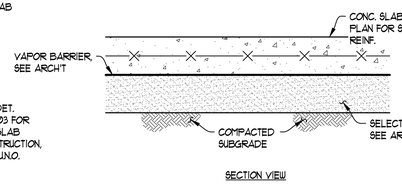

SECTION VIEW

SUB-SLAB DETAIL

DETAIL A S003
SCALE: 1 1/2"=1'-0"

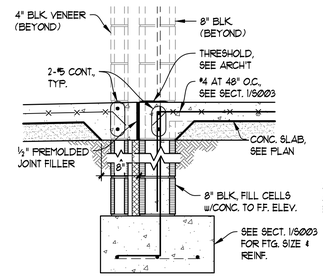

SECTION 2 S003
SCALE: 3/4"=1'-0"

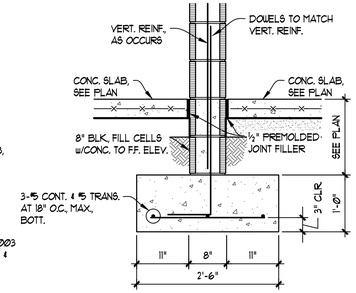

SECTION 3 S003
SCALE: 3/4"=1'-0"

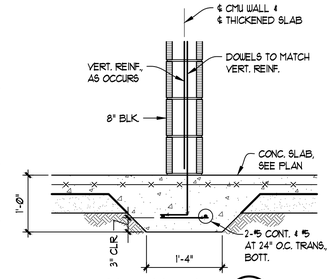

SECTION 4 S003
SCALE: 3/4"=1'-0"

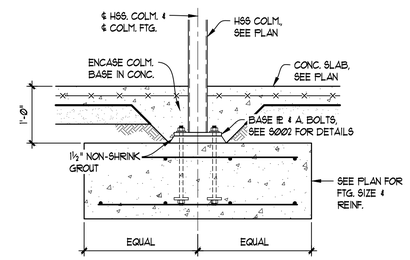

SECTION 5 S003
SCALE: 3/4"=1'-0"

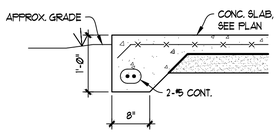

SECTION 6 S003
SCALE: 3/4"=1'-0"

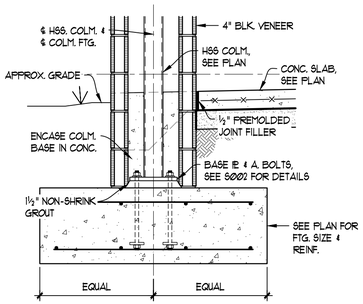

SECTION 7 S003
SCALE: 3/4"=1'-0"

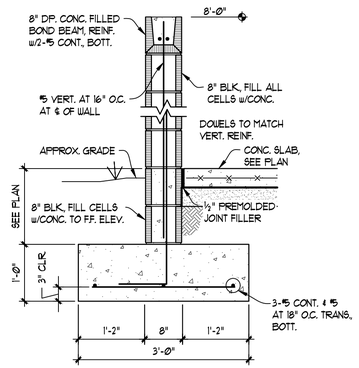

SECTION 8 S003
SCALE: 3/4"=1'-0"

JOHNSON & ASSOCIATES ENGINEERING
PROFESSIONAL CONSULTING ENGINEERS
300 CREST PARK LANE, #820
DALEVILLE, ALABAMA 36022
(334) 671-4383 * (334) 793-6276 (fax)
jae@ja-eng.com

ALABAMA REGISTERED No. 21852 PROFESSIONAL ENGINEER BRADLEY B. JOHNSON

POLY

Revision	Description	Date

DESIGNED BY: B.JOHNSON
DRAWN BY: P.GRANTHAM
DATE: FEBRUARY 2022
ENG / ARCH / SURVEYOR OF RECORD: BRADLEY B. JOHNSON, PE
REGISTRATION No. PE21832
Cert. of Auth. No.

	AL.	FL.	GA.
ARCHITECT	CA-0480	AA-C001553	001118
ENGINEER	CA-7E-E	CA-1818	001118
SURVEY		CA-0018-LB	LB-9312

These drawings are copyrighted and the property of Poly, Inc. Re-use, copy or full reproduction is prohibited except by written Agreement with Poly-Inc.

POLY, INC.
1935 Headland Avenue
Dothan, AL 36303
334-793-4700
102 Sunset Lane
Shalimar, FL 32579
850-609-1100
2241 Aquarius Dr., Ste. 116
Birmingham, AL 35209
205-913-0330
WWW.POLY-INC.COM

NEW COTTONWOOD FIELDHOUSE / WEIGHTROOM BUILDING FOR HOUSTON COUNTY BOARD OF EDUCATION

SECTIONS

SHEET No.
S-003

PROJECT No.
26-394.02

BID DOCUMENTS
FINAL DESIGN SUBMITTAL

Poly, Inc. - C:\Users\pgran\AppData\Local\Temp\AcPublish_21024\S1.1-021422.dwg [S003] Last Printed: February 16, 2022 - 07:48am By: pgran

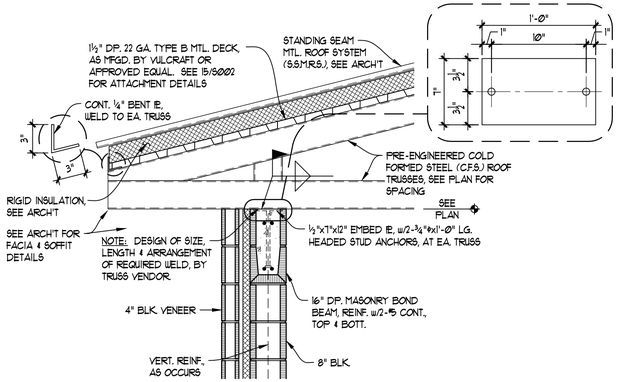

SECTION 1 S004
SCALE: ¾"=1'-0"

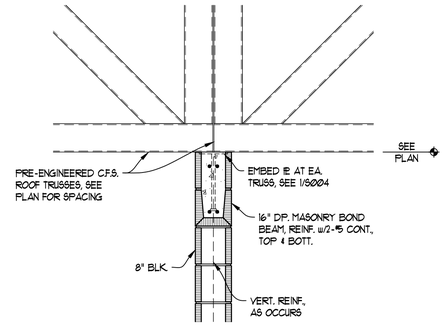

SECTION 2 S004
SCALE: ¾"=1'-0"

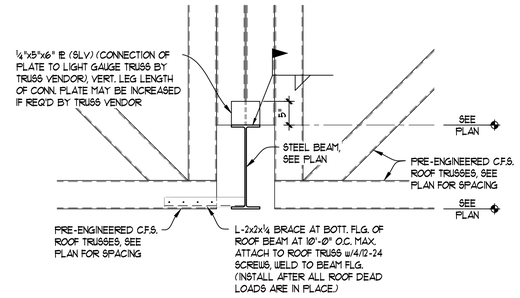

SECTION 3 S004
SCALE: ¾"=1'-0"

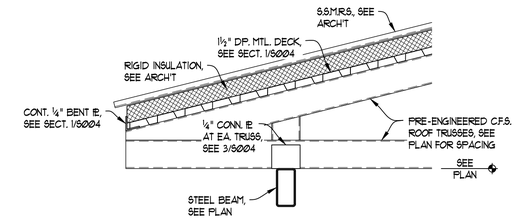

SECTION 4 S004
SCALE: ¾"=1'-0"

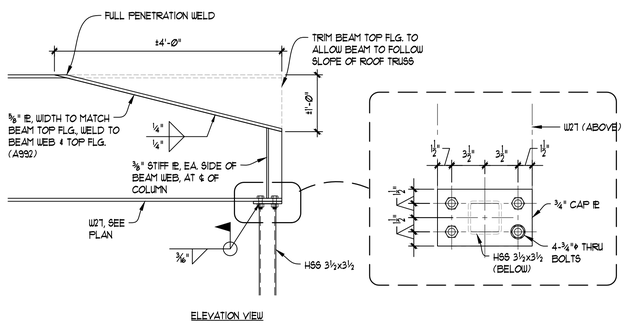

ELEVATION VIEW

MODIFIED STEEL BEAM AT ROOF SLOPE

DETAIL A S004
SCALE: ¾"=1'-0"

ALABAMA REGISTERED PROFESSIONAL ENGINEER No. 21852 BRADLEY B. JOHNSON

POLY

Revision	Description	Date

DESIGNED BY: B.JOHNSON
DRAWN BY: P.GRANTHAM
DATE: FEBRUARY 2022
ENG / ARCH / SURVEYOR OF RECORD: BRADLEY B. JOHNSON, PE
REGISTRATION No. PE21832
Cert. of Auth. No.

	AL.	FL.	GA.
ARCHITECT	CA-680	AA-C001355	001118
ENGINEER	CA-676-E	CA-1818	001118
SURVEY	CA-676-S	CA-0016-LB	LB-90132

These drawings are copyrighted and the property of Poly, Inc. Reuse in part or full reproduction is prohibited except by written agreement with Poly Inc.

POLY, INC.
1935 Headland Avenue
Dothan, AL 36303
334-794-4700
102 Sunset Lane, Ste. 116
Shalimar, FL 32579
850-609-1100
234 Acadian Dr., Ste. 116
Birmingham, AL 35209
205-913-0330
WWW.POLY-INC.COM

NEW COTTONWOOD FIELDHOUSE / WEIGHTROOM BUILDING FOR: HOUSTON COUNTY BOARD OF EDUCATION

GENERAL STRUCTURAL NOTES

SHEET No.
S-004

PROJECT No.
26-394.02

JOHNSON & ASSOCIATES ENGINEERING
PROFESSIONAL CONSULTING ENGINEERS
200 GREAR PARK LANE, #820
DOTHAN, ALABAMA 36305
(334) 673-4783 * (334) 793-6276 (fax)
jae@ja-eng.com

BID DOCUMENTS
FINAL DESIGN SUBMITTAL

Poly, Inc. - C:\Users\pgran\AppData\Local\Temp\AcPublish_21024\S1.1-021422.dwg [S004] Last Printed: February 16, 2022 - 07:48am By: pgran

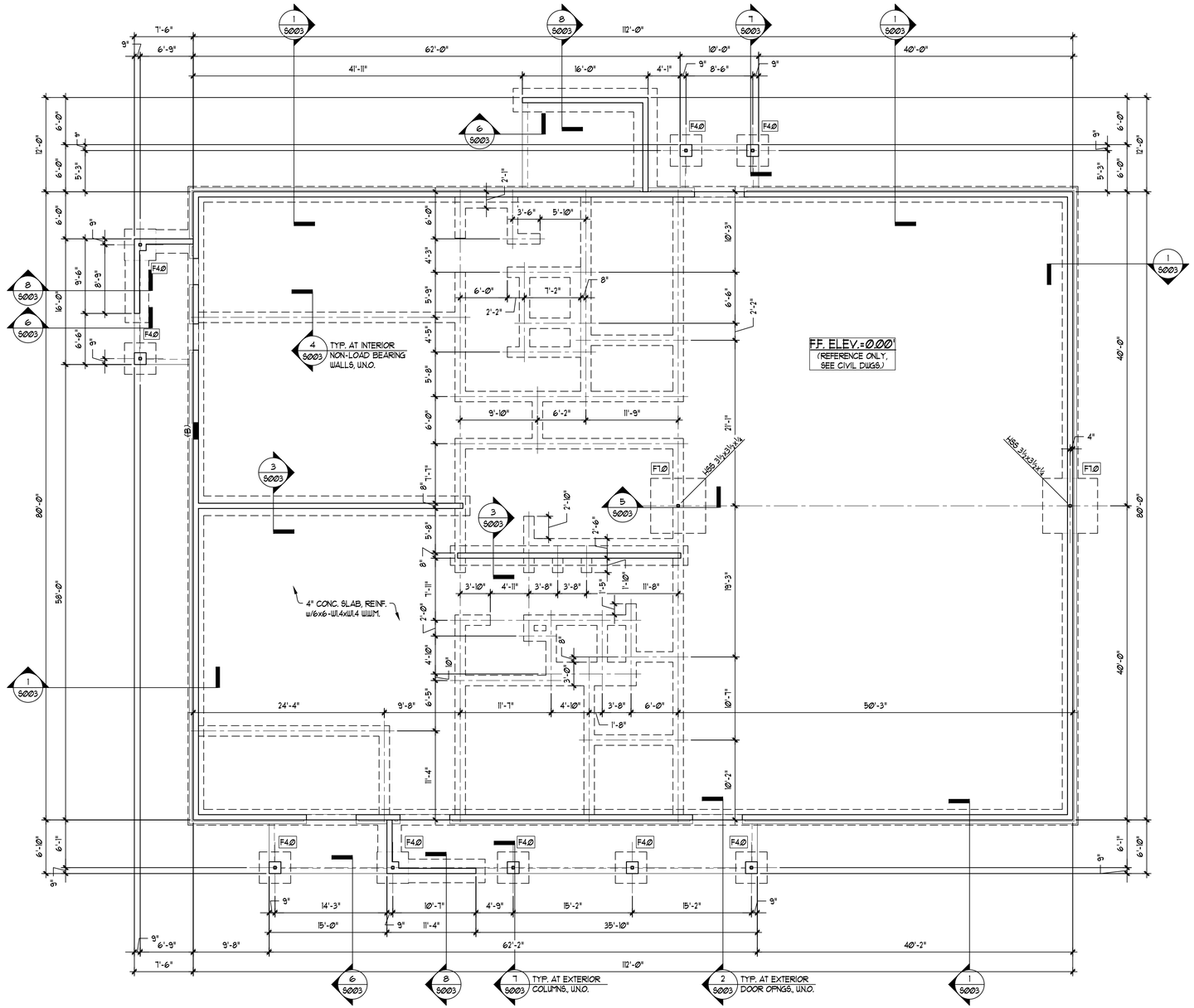

COLUMN FOOTING SCHEDULE	
MARK No.	FOOTING SIZE & REINF.
F4.0	4'-0" SQ. x 1'-4" DP., REINF. w/4-#5 EA. WAY, TOP & BOTT.
F1.0	7'-0" SQ. x 1'-4" DP., REINF. w/10-#5 EA. WAY, TOP & BOTT.

FOUNDATION PLAN

SCALE: 1/8"=1'-0"

NOTES:

1. TOP OF ALL FOOTINGS -1'-4" BELOW FINISH FLOOR UNLESS NOTED OTHERWISE (U.N.O.).
2. C.J.=CONSTRUCTION JOINT, SEE DETAIL 1/S002 S.J.=SAW JOINT, SEE DET. 2/S002. CONTRACTOR'S OPTION TO USE S.J. IN LIEU OF C.J.
3. SEE SHEET S001 FOR GENERAL STRUCTURAL NOTES. SEE SHEET S002 FOR TYPICAL DETAILS.
4. FOUNDATION PLAN PLANE IS SHOWN AT APPROXIMATELY TOP OF SLAB ELEVATION.
5. ALL COLUMNS SHOWN ARE HSS 4x4x¼ WITH TYPE 1 BASE PL U.N.O.

REINF. MASONRY NOTES
1. EXTERIOR & INTERIOR LOAD BEARING 8" CMU WALLS 1. USE (A) RM. AT 4'-0" O.C., MAX. AT ALL EXTERIOR WALL LOCATIONS AND AT ALL WALL CORNERS AND INTERSECTIONS, U.N.O. 2. OPENINGS UP TO AND INCLUDING 6'-4" WIDE CLEAR, USE (A) RM. EACH SIDE OF OPENING. 3. AT INDICATED LOCATION, USE (B) RM.

REINFORCED MASONRY (RM.) DESCRIPTIONS	
MARK No.	DESCRIPTION
(A)	8"x8" RM. FROM FOUNDATION TO BOND BEAM AT TOP OF WALL. FILL EA. CELL WITH CONC. FULL HEIGHT. REINFORCE EA. CELL WITH 1-#5 CONT. VERT. DOUEL REINF. TO FOUNDATION AND LAP w/ BOND BEAM REINF. AT TOP OF WALL
(B)	8"x24" RM. FROM FOUNDATION TO BOND BEAM AT TOP OF WALL FILL EA. WALL w/ CONC. FULL HEIGHT. REINFORCE EA. CELL w/ 1-#5 CONT. VERT. (2-#5 CONT. VERT. TOTAL) DOUEL REINF. TO FOUNDATION AND LAP w/ BOND BEAM REINF. AT TOP OF WALL

GENERAL REINFORCED MASONRY NOTES

1. RM.'S SHOWN ON PLANS ARE FOR STRUCTURAL WALLS. REINFORCE NON-STRUCTURAL WALLS WITH 8"x8" RM.'S w/ 1-#5 VERT. AT ALL CORNERS, INTERSECTIONS, OPENINGS (SUCH AS DOORS, WINDOWS, LOUVERS ETC.) AND END OF WALLS.
2. SEE DETAIL 10/S002 FOR TYPICAL RM. INSTALLATION

JOHNSON & ASSOCIATES ENGINEERING
PROFESSIONAL CONSULTING ENGINEERS
200 GROVE PARKWAY, #820
DOTHAN, ALABAMA 36303
(334) 677-4783 * (334) 793-6276 (fax)
jae@ja-eng.com

ALABAMA REGISTERED PROFESSIONAL ENGINEER No. 21852 BRADLEY B. JOHNSON

POLY

Revision	Description	Date

DESIGNED BY: B. JOHNSON	DRAWN BY: P. GRANTHAM		DATE: FEBRUARY 2022
ENG / ARCH / SURVEYOR OF RECORD: BRADLEY B. JOHNSON, PE			REGISTRATION No. PE21832
Cert. of Auth. No.	AL	FL	GA
ARCHITECT	CA-0480	AA-C001305	G01118
ENGINEER	CA-7845	CA-1818	G01118
SURVEY	CA-0018-LS	LB7027	LSF0132

These drawings are copyrighted and the property of Poly, Inc. Any partial or full reproduction is prohibited except by written Agreement with Poly Inc.

POLY, INC.
1935 Headland Avenue
Dothan, AL 36303
334-793-4700
102 Sunset Lake Dr. Ste. 116
Shalimar, FL 32579
850-609-1100
2141 Acadian Dr. Ste. 116
Birmingham, AL 35209
205-913-0330
WWW.POLY-INC.COM

NEW COTTONWOOD FIELDHOUSE / WEIGHTROOM BUILDING FOR HOUSTON COUNTY BOARD OF EDUCATION

FOUNDATION PLAN

SHEET No.
S-101

PROJECT No.
26-394.02

BID DOCUMENTS

FINAL DESIGN SUBMITTAL

Poly, Inc. - C:\Users\pgram\AppData\Local\Temp\AcPublish_21024\S1.1-021422.dwg [S101] Last Printed: February 16, 2022 - 07:48am By: pgran

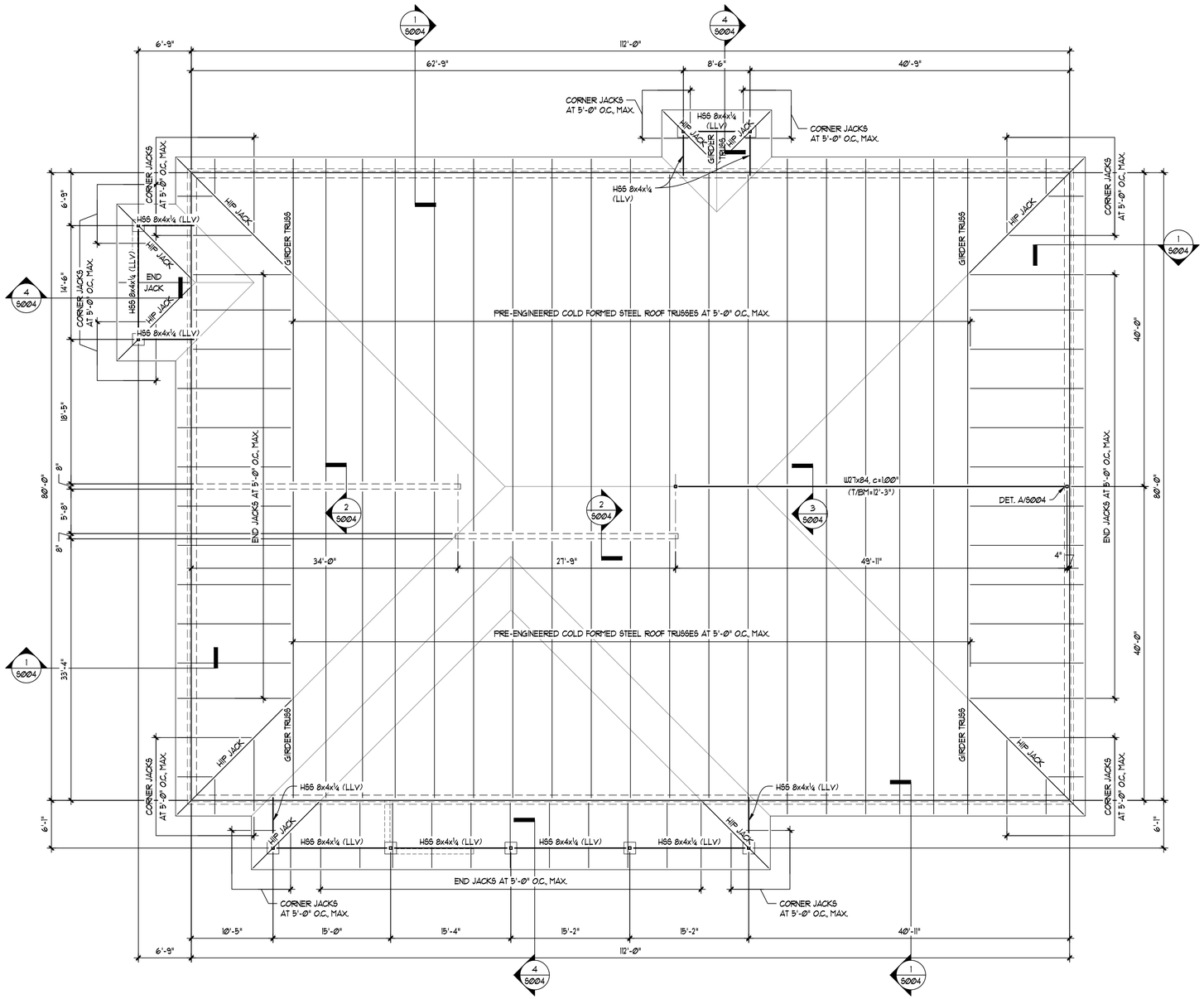

ROOF FRAMING PLAN

SCALE: 1/8"=1'-0"

NOTES:

1. ROOF TRUSS BRNG. = 10'-0", U.N.O.
2. ROOF FRAMING PLAN SHOWN IS SCHEMATIC IN NATURE ONLY. ROOF TRUSS MFGR. IS SOLELY RESPONSIBLE FOR FINAL FRAMING LAYOUT AND DESIGN. CONTACT STRUCTURAL ENGINEER OF RECORD PRIOR TO CHANGING ANY ASPECT OF ROOF TRUSS FRAMING DEPICTED ON THIS PLAN.
3. INSTALL BRACING AND BRIDGING AT ALL COLD FORMED STEEL TRUSSES AS REQ'D BY TRUSS MFGR'S DRAWING.
4. SEE SHEET S001 FOR GENERAL STRUCTURAL NOTES

ALABAMA REGISTERED PROFESSIONAL ENGINEER No. 21852 BRADLEY B. JOHNSON

POLY

Revision	Description	Date

DESIGNED BY: B.JOHNSON
DRAWN BY: P.GRANTHAM
DATE: FEBRUARY 2022
ENG / ARCH / SURVEYOR OF RECORD: BRADLEY B. JOHNSON, PE
REGISTRATION No. PE21852

	Cert. of Auth. No.	AL	FL	GA
ARCHITECT	CA-0480	AA-C001051	00111B	00111B
ENGINEER	CA-7616	CA-1818	00111B	3-P30132
SURVEY	CA-0819-LS	LB7527		

These drawings are copyrighted and the property of Poly, Inc. Any re-use or full reproduction is prohibited except by written agreement with Poly Inc.

POLY, INC.
1935 Headland Avenue
Dothan, AL 36303
334-793-4700
103 Sunset Lake Dr.
Shalimar, FL 32579
850-609-1100
234 Inverness Dr. Ste. 116
Birmingham, AL 35209
205-913-0330
WWW.POLY-INC.COM

NEW COTTONWOOD FIELDHOUSE / WEIGHTROOM BUILDING FOR HOUSTON COUNTY BOARD OF EDUCATION

ROOF FRAMING PLAN

SHEET No.
S-102

PROJECT No.
26-394.02

JOHNSON & ASSOCIATES ENGINEERING
PROFESSIONAL CONSULTING ENGINEERS
200 GRAND PARKWAY, #820
HOOVER, ALABAMA 35244
(334) 673-4783 * (334) 793-6276 (fax)
jae@ja-eng.com

BID DOCUMENTS
FINAL DESIGN SUBMITTAL

Poly, Inc. - C:\Users\pgran\AppData\Local\Temp\AcPublish_21024\S1.1-021422.dwg [S102] Last Printed: February 16, 2022 - 07:48am By: pgran

CAMPUS SITE PLAN

SCALE 1" = 80'-0"

ENLARGED SITE PLAN

SCALE 1" = 20'-0"

0 40' 80' 160'

SCALE: 1"=80'-0"

STATE OF ALABAMA
CLAYTON M. WILKS
7609
03/17/22
REGISTERED ARCHITECT

POLY

Revision	REVISION DESCRIPTION	Date
		00-00-0000
	Description	

DESIGNED BY: CMW
DRAWN BY: CMW
DATE: MARCH 2022
ENG/ARCH/SURVEYOR OF RECORD: CLAYTON M. WILKS
REGISTRATION No. 7609
Cert. of Auth. No. AL FL GA
ARCHITECT: DA-460 AA-C001561 001118
ENGINEER: CA-742 CA-1818 001118
SURVEYOR:

These drawings are considered the property of Poly-Inc. Any use, partial or full reproduction is prohibited except by written Agreement with Poly-Inc.

POLY, INC.
1935 Headland Avenue,
Dothan, AL 36303
334-793-7000
102 Sunset Lane 2135 University Blvd, Ste. A
Shoreline, AL 35068 Tuscaloosa, AL 35401
850-609-1100 205-752-4037
WWW.POLY-INC.COM

COTTONWOOD HIGH SCHOOL FIELD HOUSE FOR HOUSTON COUNTY BOARD OF EDUCATION

ARCHITECTURAL SITE PLAN

SHEET No.
AS-100

PROJECT No.
26394.02

ARCHITECTURAL SITE PLAN

G:\CLEANSTUFF-15-28\26394 Houston BOE Open End Projects\26394.02 - Cottonwood Fieldhouse\03 - Final Design\ARCHITECTURE\CHS Fieldhouse.rvt

BID DOCUMENTS

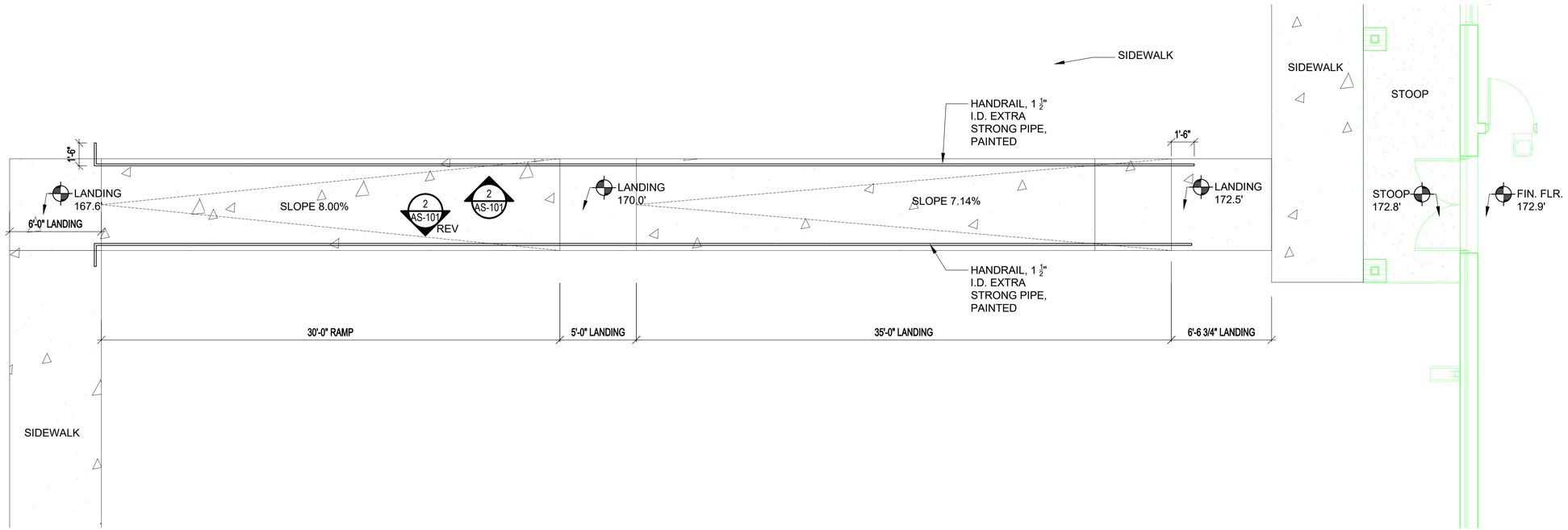

1 SIDEWALK RAMP PLAN
AS-101 SCALE: 1/4" = 1'-0"

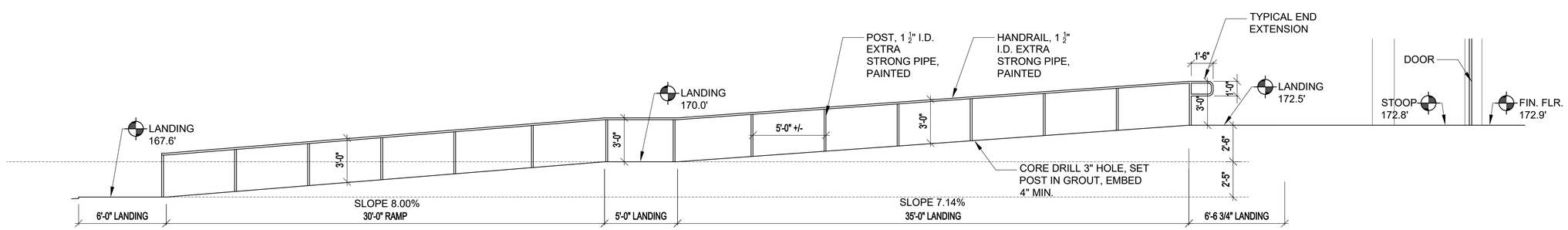

2 SIDEWALK HANDRAIL ELEVATION
AS-101 SCALE: 1/4" = 1'-0"

STATE OF ALABAMA
CLAYTON M. WILKS
7609
03/17/22
REGISTERED ARCHITECT

Revision	Description	Date

DESIGNED BY: CMW
DRAWN BY: CMW
DATE: MARCH 2022
ENG / ARCH / SURVEYOR OF RECORD: CLAYTON M. WILKS
REGISTRATION No.
Cert. of Auth. No.
AL FL GA
ARCHITECT CA-0480 AA-C001051 001118
ENGINEER CA-784-E CA-1818 001118

These drawings are copyrighted and the property of Poly-Inc. Any use, partial or full reproduction is prohibited except by written Agreement with Poly-Inc.

POLY, INC.
1935 Headland Avenue
Dothan, AL 36303
334-793-4700
102 Sunset Lane
Shalimar, FL 32579
850-609-1100
2135 University Blvd. Ste. A
Tuscaloosa, AL 35401
205-752-4037
WWW.POLY-INC.COM

NEW COTTONWOOD FIELDHOUSE / WEIGHTROOM BUILDING FOR HOUSTON COUNTY BOARD OF EDUCATION

SIDEWALK RAMP PLAN & ELEVATION

SHEET No.
AS-101

PROJECT No.
26-394.02

BID DOCUMENTS

Poly, Inc. - G:\CLEANSTUFF-15-28\26394 Houston BOE Open End Projects\26394.02 - Cottonwood Fieldhouse\03 - Final Design\ARCHITECTURE\CAD\26394.02_AS-101 Handrail Elev.dwg [Layout1] Last Printed: April 26, 2022 - 02:27pm By: cwilks

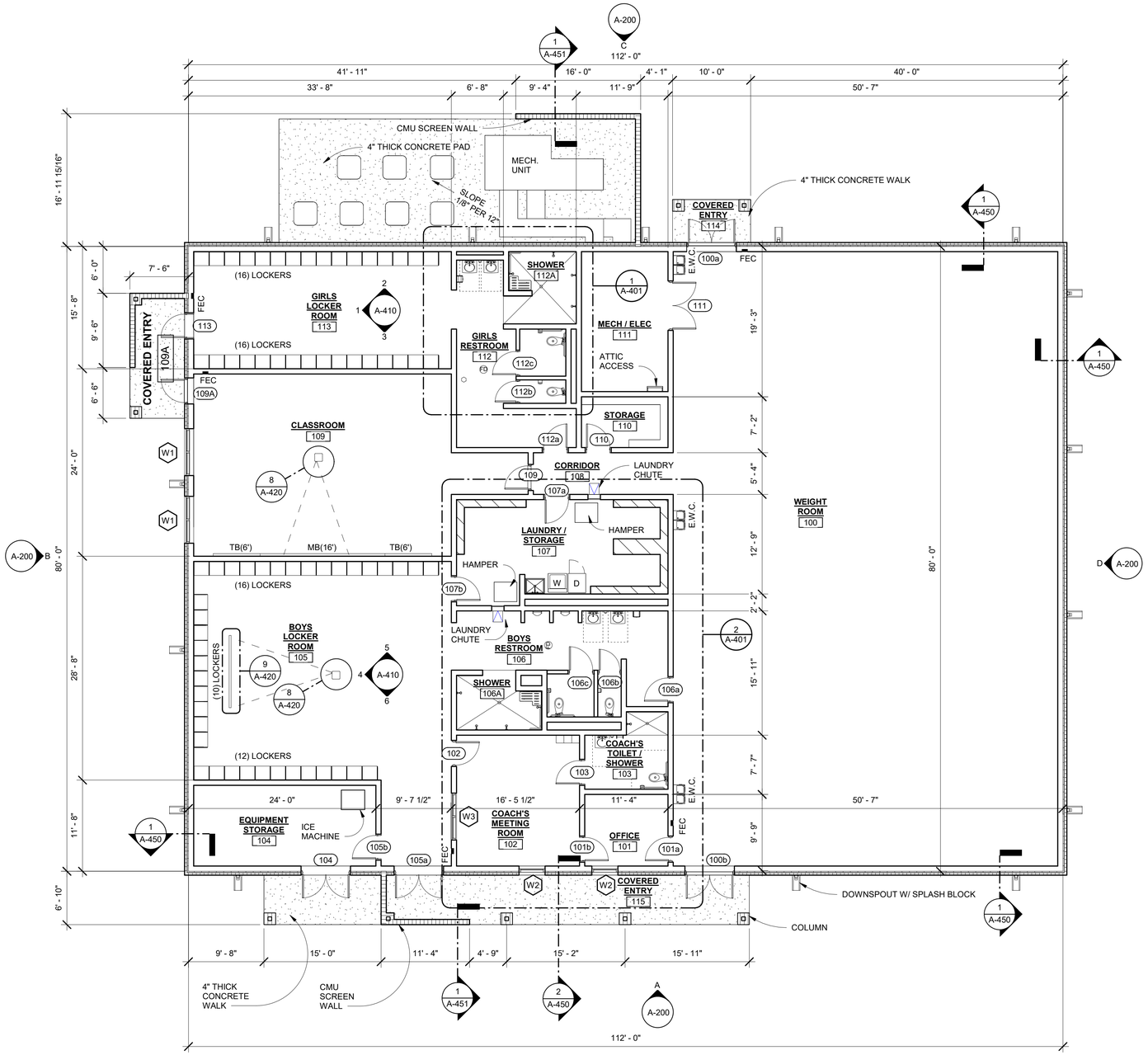

FLOOR PLAN

SCALE 1/8" = 1'-0"

PLAN LEGEND

- WALL TYPE IDENTIFIER
- DIMENSION
- DOOR IDENTIFIER
- WINDOW TYPE
- INTERIOR ELEVATION REFERENCE
- ROOM IDENTIFIER
- GRID LINE IDENTIFIER

WALL TYPES

- INTERIOR WALL - 8" CMU, EXTENDED TO TRUSS BEARING HEIGHT, UNLESS OTHERWISE NOTED
- INTERIOR WALL - 6" CMU
- INTERIOR WALL - 4" CMU
- EXTERIOR WALL - 8" CMU, EXTENDED TO TRUSS BEARING HEIGHT, w/ DAMPPROOFING, RIGID INSULATION, AND BRICK VENNER

MISCELLANEOUS CONTRACTOR INSTALLED ITEMS

- F.E.C. — FIRE EXTINGUISHER CABINET
- E.W.C. — ELECTRIC WATER COOLER
- MB (#') — MARKER BOARD. 4' HIGH x LENGTH NOTED
- TB (#') — TACK BOARD. 4' HIGH x LENGTH NOTED

0 4' 8' 12'
SCALE: 1/8"=1'-0"

STATE OF ALABAMA
CLAYTON M. WILKS
7609
03/17/22
REGISTERED ARCHITECT

Revision	REVISION DESCRIPTION	Description	Date
			00-00-0000

DESIGNED BY: CMW
DRAWN BY: CMW
DATE: MARCH 2022
ENG/ARCH/SURVEYOR OF RECORD: CLAYTON M. WILKS
REGISTRATION No. 7609
Cert. of Auth. No. AL GA FL
ARCHITECT CA-0480 AA-C001551 001118
ENGINEER CA-78-E CA-1818 001118
SURVEYOR

These drawings are copyrighted and the property of Poly-Inc. Any use, reproduction or publication is prohibited except by written agreement with Poly-Inc.

POLY, INC.
1905 Hoover Avenue, Dothan, AL 36303
334-793-4700
102 Sunset Lane Shallmar, FL 32579
2135 University Blvd. Sta. A Tuscaloosa, AL 35401
850-609-1100
205-752-4037
WWW.POLY-INC.COM

COTTONWOOD HIGH SCHOOL FIELD HOUSE FOR HOUSTON COUNTY BOARD OF EDUCATION

FLOOR PLAN

SHEET No.
A-100

PROJECT No.
26394.02

BID DOCUMENTS

G:\CLEANSTUFF-15-28\26394 Houston BOE Open End Projects\26394.02 - Cottonwood Fieldhouse\03 - Final Design\ARCHITECTURE\CHS Fieldhouse.rvt

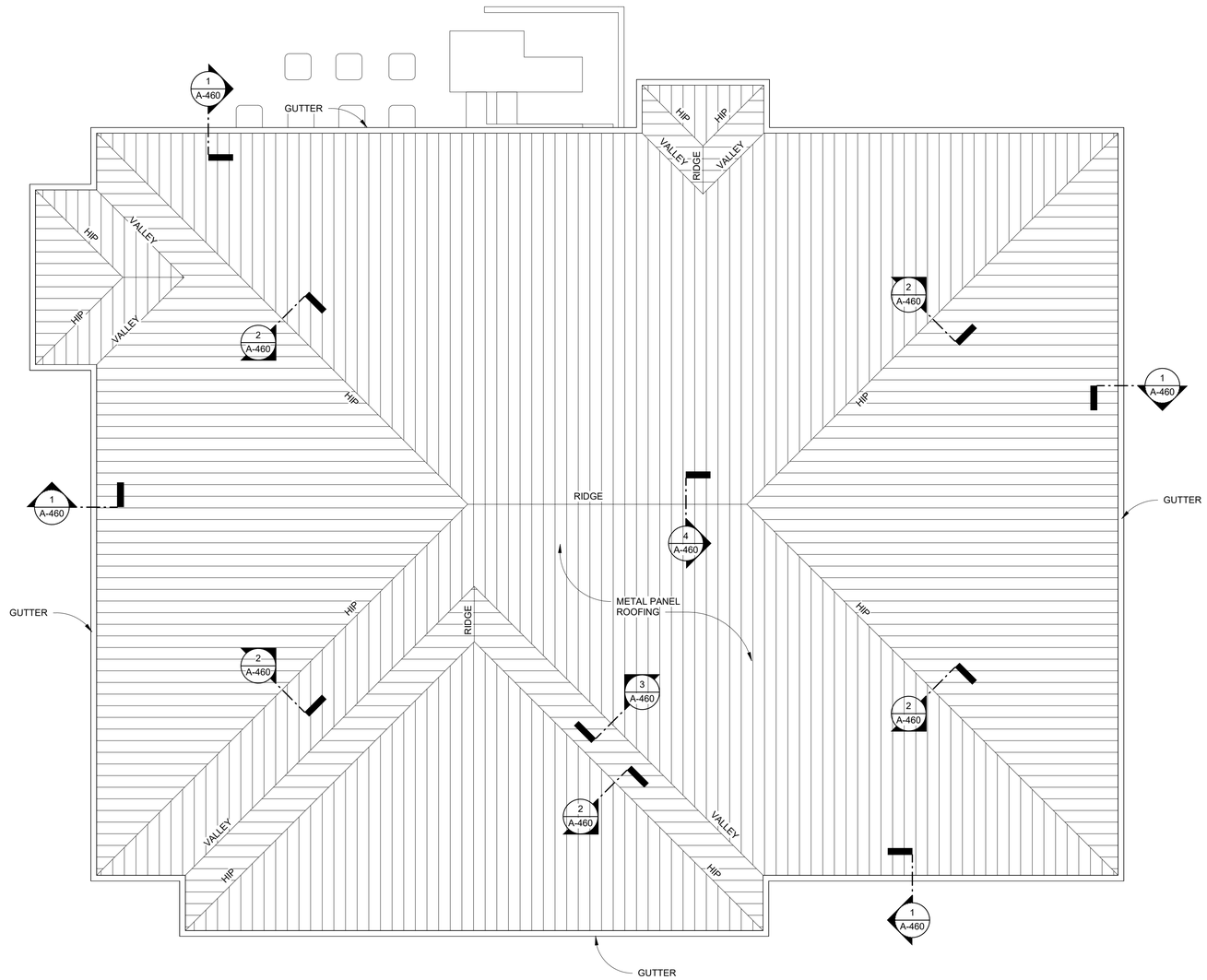

ROOF PLAN

SCALE 1/8" = 1'-0"

0 4' 8' 12'
SCALE: 1/8"=1'-0"

BID DOCUMENTS

STATE OF ALABAMA
CLAYTON M. WILKS
7609
03/17/22
REGISTERED ARCHITECT

POLY

Revision	Description	Date
1	REVISION DESCRIPTION	00-00-0000

DESIGNED BY: CMW
DRAWN BY: CMW
DATE: MARCH 2022
ENG/ARCH/SURVEYOR OF RECORD: CLAYTON M. WILKS
REGISTRATION No. 7609
Cert. of Auth. No. Al. FL. GA.
ARCHITECT CA-0480 AA-C001551 001118
ENGINEER CA-78-E CA-1818 001118
SURVEYOR
These drawings are copyrighted and the property of Poly, Inc. Any use, publication or reproduction is prohibited except by written agreement with Poly-Inc.

POLY, INC.
1905 Hanover Avenue,
Dothan, AL 36305
334-793-4700
102 Sunset Lane 2135 University Blvd. Ste. A,
Shalimar, FL 32579 Tuscaloosa, AL 35401
850-609-1100 205-752-4037
WWW.POLY-INC.COM

COTTONWOOD HIGH SCHOOL FIELD HOUSE FOR HOUSTON COUNTY BOARD OF EDUCATION

ROOF PLAN

SHEET No.
A-110

PROJECT No.
26394.02

3/17/2022 12:07:52 PM

ROOF PLAN

G:\CLEANSTUFF-15-28\26394 Houston BOE Open End Projects\26394.02 - Cottonwood Fieldhouse\03 - Final Design\ARCHITECTURE\CHS Fieldhouse.rvt

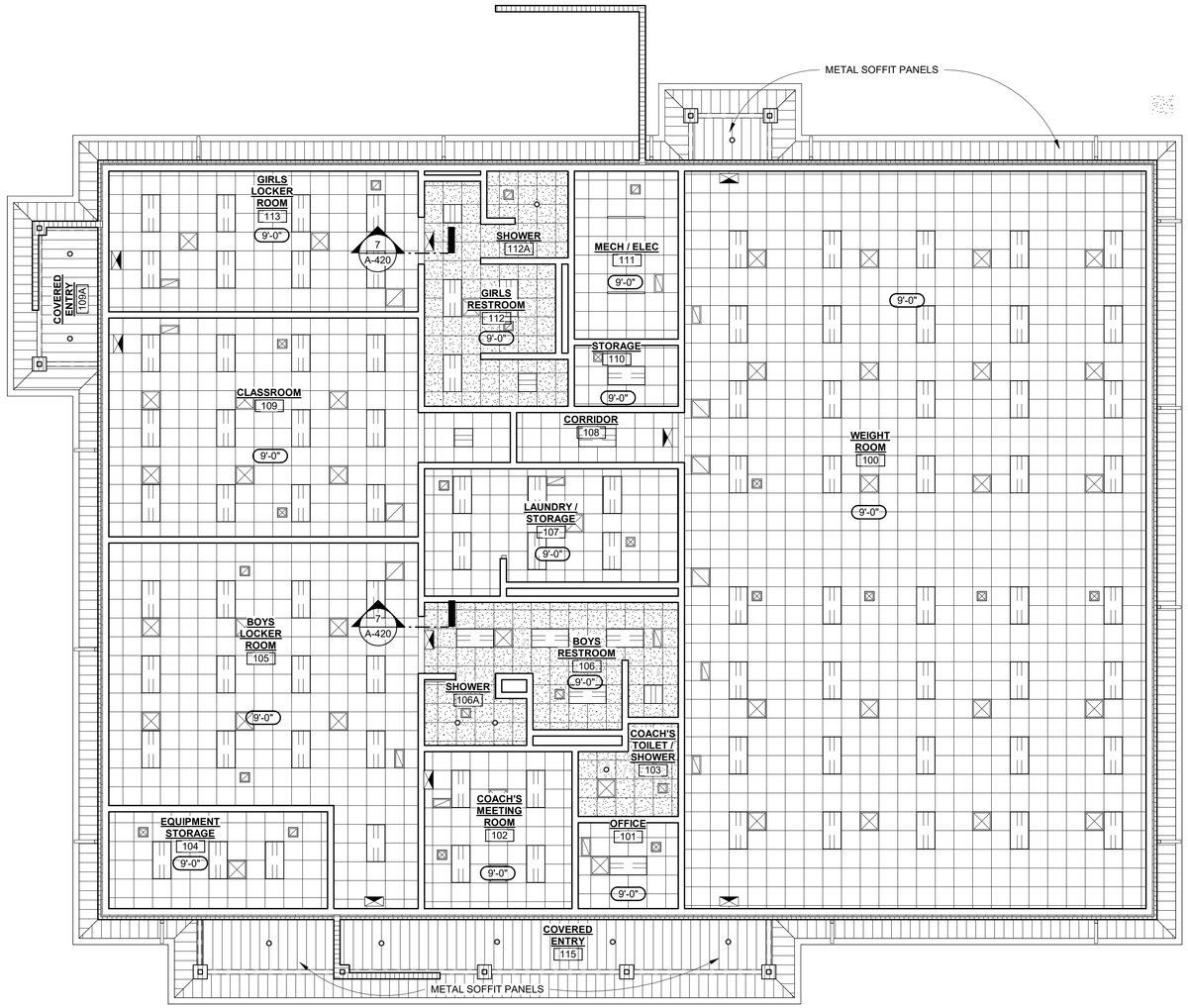

REFLECTED CEILING PLAN

SCALE 1/8" = 1'-0"

REFLECTED CEILING PLAN LEGEND

- ACOUSTICAL LAY-IN CEILING (ACT - 1)
- ACOUSTICAL LAY-IN CEILING (ACT - 2)
- GYPSUM CEILING
- 8'-0" BUILDING / FUR-DOWN CEILING HEIGHT INDICATOR
- DOWN LIGHT
- RECESSED LIGHT FIXTURE
- RECESSED LIGHT FIXTURE
- SUPPLY DIFFUSER
- EXHAUST GRILLE
- RETURN GRILLE
- EXIT SIGN

0 4' 8' 12'
SCALE: 1/8"=1'-0"

STATE OF ALABAMA
CLAYTON M. WILKS
7609
03/17/22
REGISTERED ARCHITECT

Revision	REVISION DESCRIPTION	Date
		00-00-0000

DESIGNED BY: CMW
DRAWN BY: CMW
DATE: MARCH 2022
ENG/ARCH/SURVEYOR OF RECORD: CLAYTON M. WILKS
REGISTRATION No. 7609
Cert. of Auth. No. AL FL GA
ARCHITECT OA:6490 IAA:C001551 001118
ENGINEER CA:78-E CA:1818 001118
SURVEYOR
These drawings are copyrighted and the property of Poly-Inc. Any reproduction is prohibited except by written agreement with Poly-Inc.

POLY, INC.
1632 Headley Avenue
Dothan, AL 36303
334-793-4700
102 Sunset Lane
Shalimar, FL 32579
850-609-1100
2135 University Blvd, Ste. A
Tuscaloosa, AL 35401
205-752-4037
WWW.POLY-INC.COM

COTTONWOOD HIGH SCHOOL FIELD HOUSE FOR HOUSTON COUNTY BOARD OF EDUCATION

REFLECTED CEILING PLAN

SHEET No.
A-120

PROJECT No.
26394.02

BID DOCUMENTS

4/27/2022 9:11:36 AM
REFLECTED CEILING PLAN
G:\CLEANSTUFF-15-28\26394 Houston BOE Open End Projects\26394.02 - Cottonwood Fieldhouse\03 - Final Design\ARCHITECTURE\CHS Fieldhouse.rvt

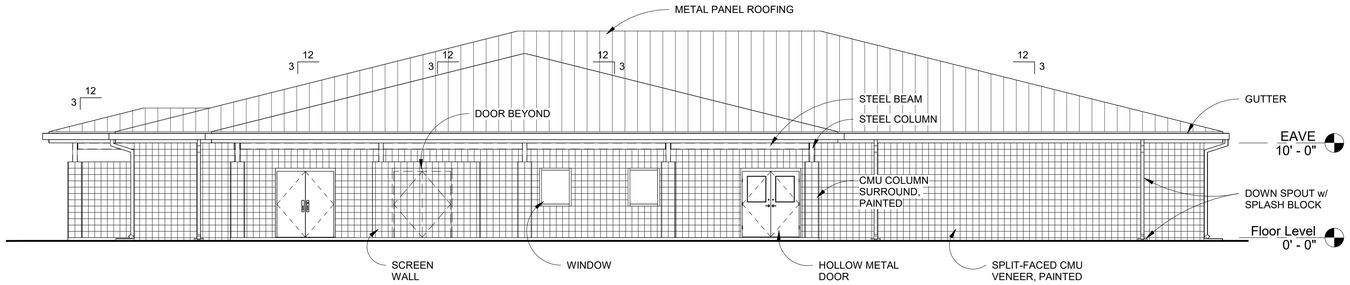

A EXTERIOR ELEVATION

SCALE: 1/8" = 1'-0"

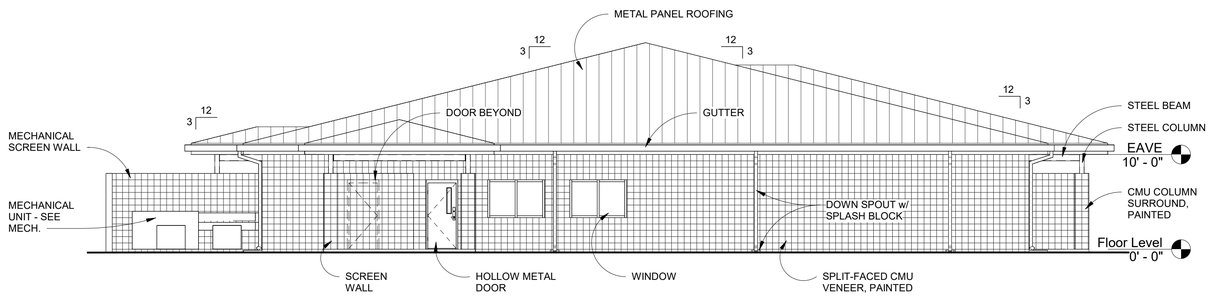

B EXTERIOR ELEVATION

SCALE: 1/8" = 1'-0"

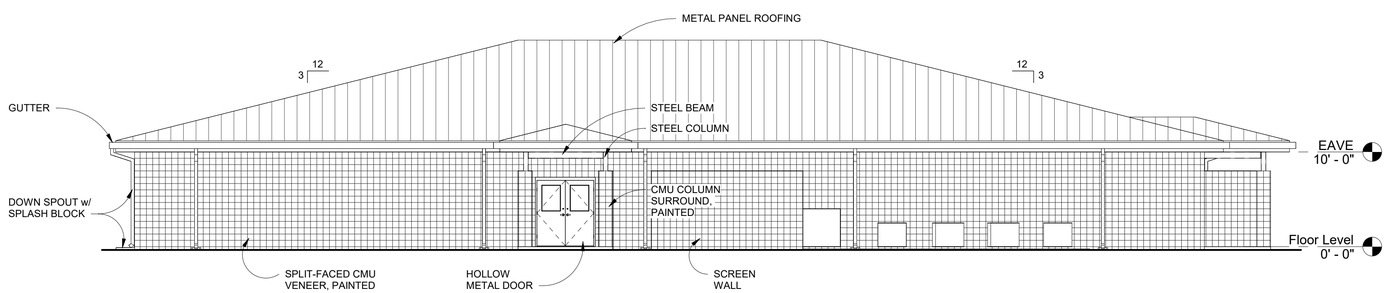

C EXTERIOR ELEVATION

SCALE: 1/8" = 1'-0"

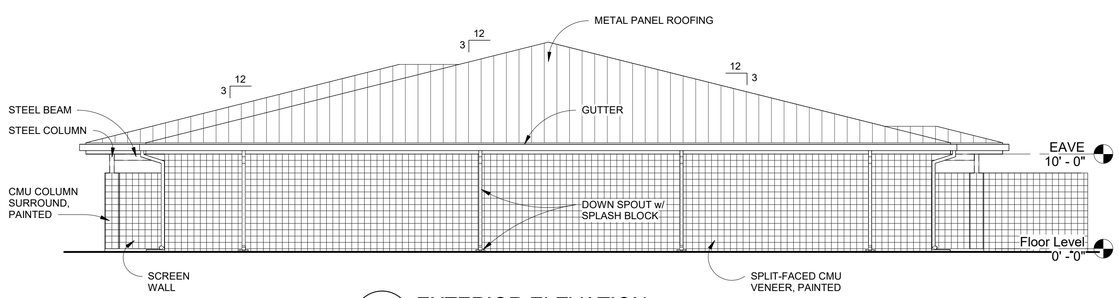

D EXTERIOR ELEVATION

SCALE: 1/8" = 1'-0"

0 4' 8' 12'

SCALE: 1/8"=1'-0"

STATE OF ALABAMA
CLAYTON M. WILLIS
7609
03/17/22
REGISTERED ARCHITECT

POLY

Revision	Description	Date
1	REVISION DESCRIPTION	00-00-0000

DESIGNED BY: CMW
DRAWN BY: CMW
DATE: MARCH 2022
ENG/ARCH/SURVEYOR OF RECORD: CLAYTON M. WILLIS
REGISTRATION No. 7609
Cert. of Auth. AL FL GA
ARCHITECT CA-0480 AA-C001551 I001118
ENGINEER CA-76-E CA-1818 I001118
SURVEYOR

These drawings are copyrighted and the property of Poly-Inc. Any use, reuse or re-reproduction is prohibited except by written agreement with Poly-Inc.

POLY, INC.
1935 Heard Avenue, Dothan, AL 36303
334-793-4700
102 Sunset Lane Shalimar, FL 32579 850-609-1100
2135 University Blvd. Sta. A Tuscaloosa, AL 35401 205-752-4037
WWW.POLY-INC.COM

COTTONWOOD HIGH SCHOOL FIELD HOUSE FOR HOUSTON COUNTY BOARD OF EDUCATION

EXTERIOR ELEVATIONS

SHEET No.
A-200

PROJECT No.
26394.02

BID DOCUMENTS

4/27/2022 11:53:11 AM

EXTERIOR ELEVATIONS

G:\CLEANSTUFF-15-28\26394 Houston BOE Open End Projects\26394.02 - Cottonwood Fieldhouse\03 - Final Design\ARCHITECTURE\CHS Fieldhouse.rvt

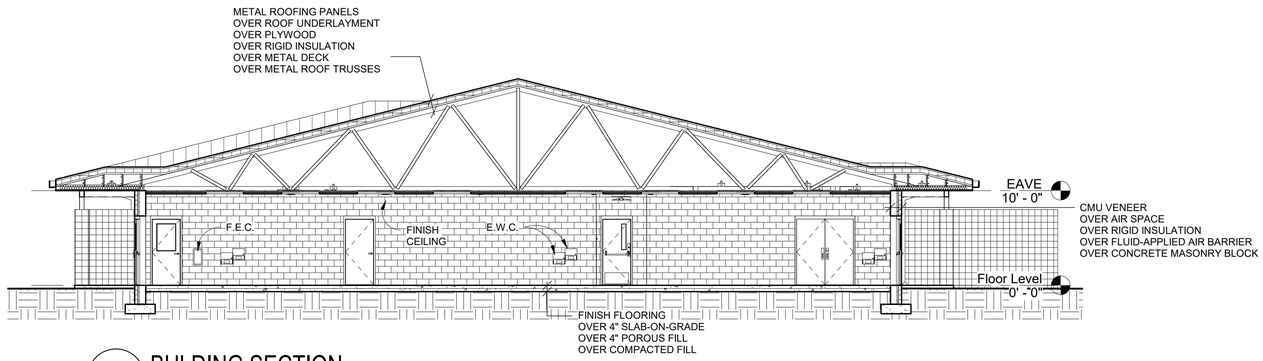

1 BULDING SECTION

SCALE: 1/8" = 1'-0"

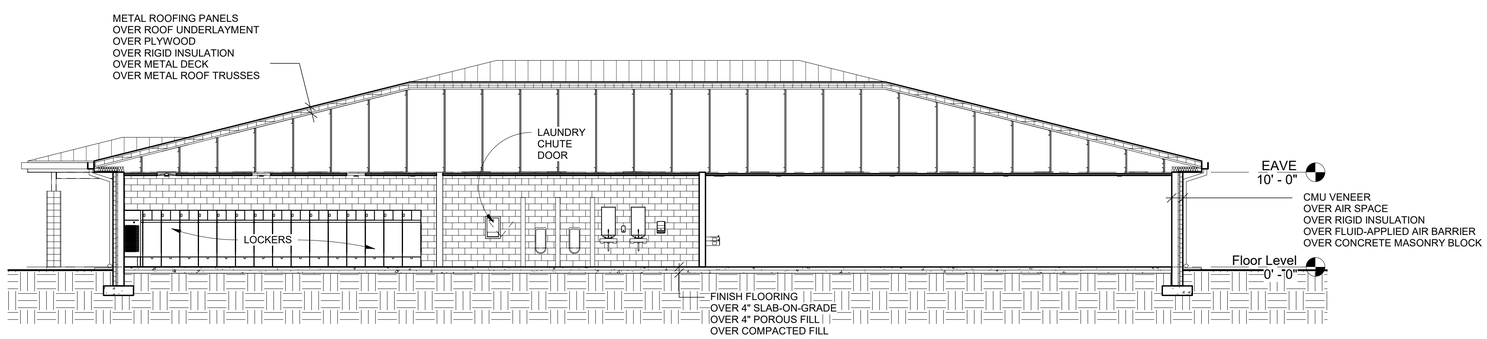

2 BULDING SECTION

SCALE: 1/8" = 1'-0"

0 4' 8' 12'

SCALE: 1/8"=1'-0"

STATE OF ALABAMA
CLAYTON M. WILLAS
7609
03/17/22
REGISTERED ARCHITECT

POLY

Revision	REVISION DESCRIPTION	Date
1		00-00-0000

DESIGNED BY: CMW
DRAWN BY: CMW
DATE: MARCH 2022

ENG/ARCH/SURVEYOR OF RECORD: CLAYTON M. WILAS
REGISTRATION No. 7609
Cert. of Auth. AL FL GA

ARCHITECT	CA-0480	AA-C001551	001118
ENGINEER	CA-781-E	CA-1818	001118
SURVEYOR			

These drawings are copyrighted and the property of Poly-Inc. Any reproduction or reproduction is prohibited except by written agreement with Poly-Inc.

POLY, INC.
1953 Headland Avenue,
Dothan, AL 36303
334-793-4700

102 Sunset Lane 2135 University Blvd. Ste. A
Shalimar, FL 32579 Tuscaloosa, AL 35401
850-609-1100 205-752-4037

WWW.POLY-INC.COM

COTTONWOOD HIGH SCHOOL FIELD HOUSE FOR HOUSTON COUNTY BOARD OF EDUCATION

BUILDING SECTIONS

SHEET No.
A-301

PROJECT No.
26394.02

BID DOCUMENTS

3/17/2022 12:09:28 PM

BUILDING SECTIONS

G:\CLEANSTUFF-15-28\26394 Houston BOE Open End Projects\26394.02 - Cottonwood Fieldhouse\03 - Final Design\ARCHITECTURE\CHS Fieldhouse.rvt

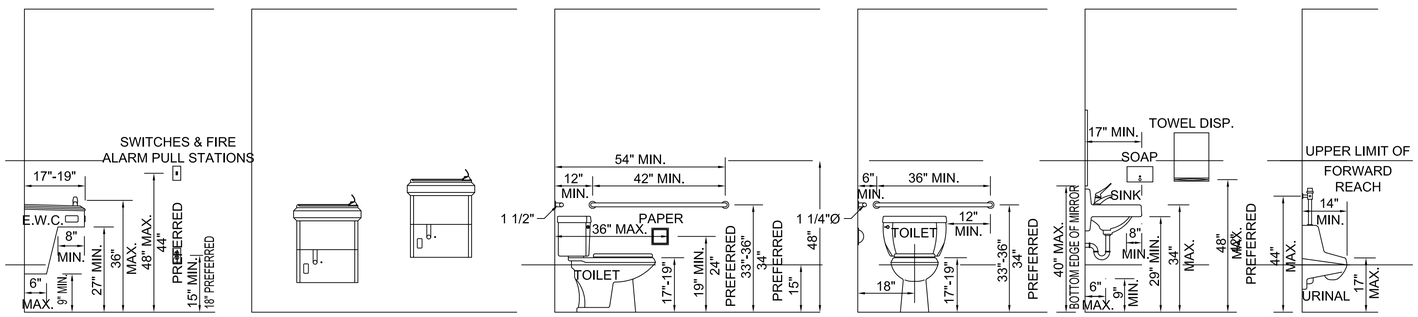

TOILET ACCESSORY SCHEDULE

INSTALLATION NOTES:

1. SCHEDULED ITEMS ARE REQUIRED ONLY AS INDICATED AND LOCATED ON PLANS.
2. DIMENSIONS SHOWN ARE FOR TYPICAL CONDITIONS.
3. AS A GUIDELINE MOUNT THE OPERATING FEATURE AND/OR RECEPTACLE 40" A.F.F..
4. IF LOCATION OR HEIGHT CONFLICT OCCURS, COORDINATE WITH ARCHITECT PRIOR TO INSTALLING ACCESSORY.

SYMBOL	ACCESSORY DESCRIPTION	BASIS OF DESIGN / NOTES
1	TILT MIRROR 18" x 36"	ASI 0600-18x36
2	SOAP DISPENSER	VENDOR PROVIDED
3	ELECTRIC HAND DRYER	BASIS OF DESIGN: WORLD DRYER - VERDE DRI
4	TOILET TISSUE DISPENSER	VENDOR PROVIDED
5	ADA SHOWER BENCH SEAT	ASI 8206
6	SHOWER GRAB BAR	ASI 3850
7	36" GRAB BAR	ASI 3801-36
8	42" GRAB BAR	ASI 3801-42
9	COAT HOOK	ASI 7340-S
10	MOP RACK WITH SHELF	ASI 1308-3

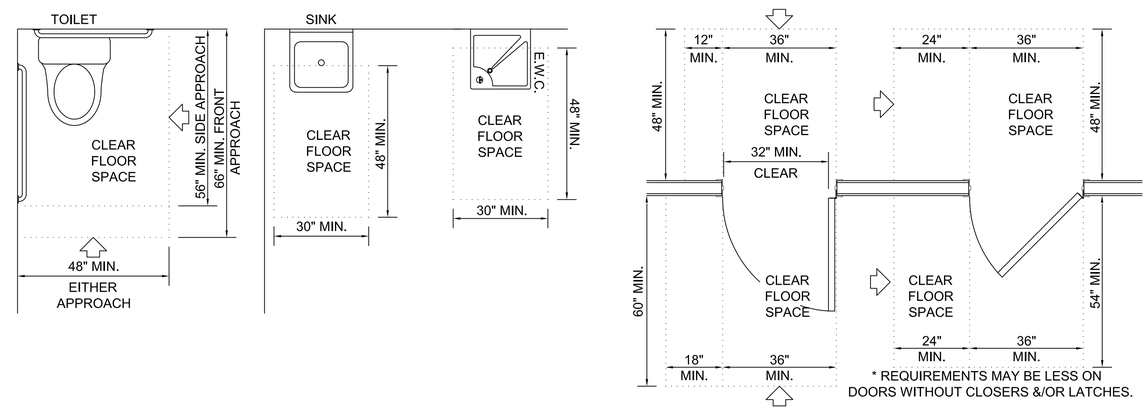

* REQUIREMENTS MAY BE LESS ON DOORS WITHOUT CLOSERS &/OR LATCHES.

TYPICAL ACCESSIBLE (ADA) MOUNTING HEIGHTS AND CLEARANCES

SCALE: 1/2" =1'-0"

2 1 0 2 4FT

SCALE: 1/2" = 1'-0"

STATE OF ALABAMA
CLAYTON M. WILKS
7609
03/17/22
REGISTERED ARCHITECT

POLY

Revision	Description	Date

DATE: MARCH 2022
REGISTRATION No.

DESIGNED BY: CMW
DRAWN BY: CMW
ENG / ARCH / SURVEYOR OF RECORD:

	Cert. of Auth. No.	FL	GA
ARCHITECT	CA-4460	AA-C001051	001118
ENGINEER	CA-7842	CA-1918	001118

These drawings are copyrighted and the property of Poly-Inc. Any use, partial or full reproduction is prohibited without written Agreement with Poly-Inc.

POLY, INC.
1935 Headland Avenue
Dothan, AL 36303
334-793-4700
102 Sunset Lane 2135 University Blvd, Ste. A
Shalimar, FL 32579 Tuscaloosa, AL 35401
850-609-1100 205-752-4037
WWW.POLY-INC.COM

NEW COTTONWOOD FIELDHOUSE / WEIGHTROOM BUILDING FOR
HOUSTON COUNTY BOARD OF EDUCATION

ADA CLEARANCES, HEIGHTS AND EQUIPMENT REQUIREMENTS

SHEET No.
A-400

PROJECT No.
26-394.02

BID DOCUMENTS

Poly, Inc. - G:\CLEANSTUFF-15-28\26394 Houston BOE Open End Projects\26394.02 - Cottonwood Fieldhouse\03 - Final Design\ARCHITECTURE\CAD\26394.02_A-400 - ADA CLEARANCES.dwg [Layout1] Last Printed: March 17, 2022 - 11:21am By: jbrady

ENLARGED FLOOR PLANS

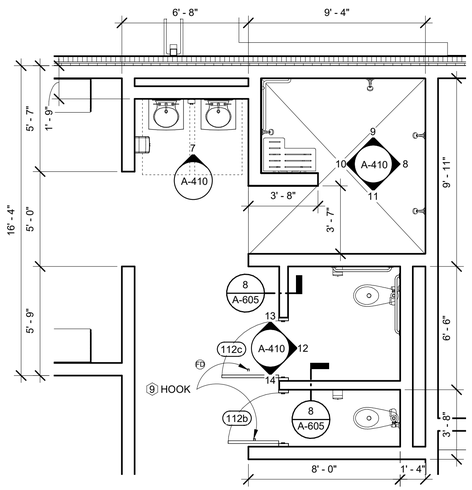

1 ENLARGED FLOOR PLAN
1/4" = 1'-0"

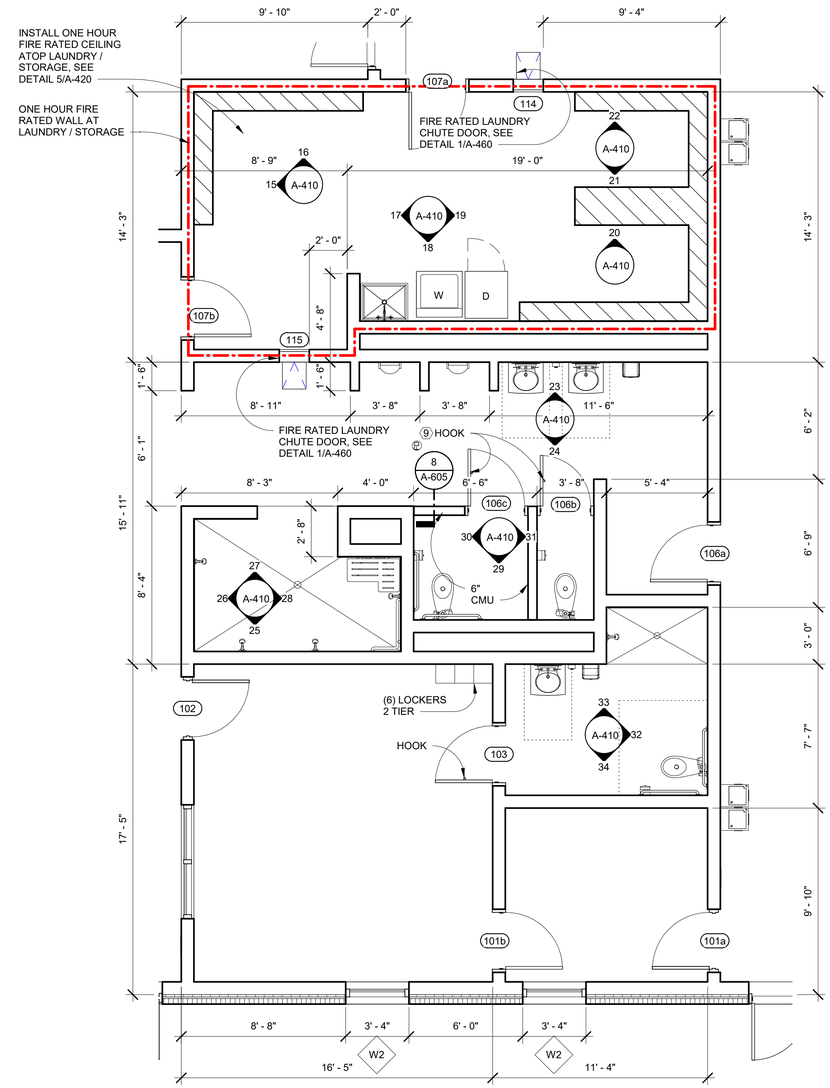

2 ENLARGED FLOOR PLAN
1/4" = 1'-0"

0 2' 4' 8'
SCALE: 1/4"=1'-0"

STATE OF ALABAMA
CLAYTON M. WILKS
7609
03/17/22
REGISTERED ARCHITECT

POLY

Revision	REVISION DESCRIPTION	Date
		00-00-0000

DATE: MARCH 2022
REGISTRATION No. 7609
These drawings are copyrighted and the property of Poly-Inc. Any use, partial or full reproduction is prohibited except by written Agreement with Poly-Inc.

DESIGNED BY: CMW
DRAWN BY: CMW
ENG/ARCH/SURVEYOR OF RECORD: CLAYTON M. WILKS
Cert. of Auth. No. AL FL GA
ARCHITECT CA-4480 AA-C001551 001118
ENGINEER CA-516E CA-1818 001118
SURVEYOR

POLY, INC.
1935 Headland Avenue, Dothan, Alabama 36303
334-793-4700
102 Sunset Lane Shalimar, FL 32579 850-609-1100
2135 University Blvd, Ste. A Tuscaloosa, AL 35401 205-752-4037
WWW.POLY-INC.COM

COTTONWOOD HIGH SCHOOL FIELD HOUSE FOR HOUSTON COUNTY BOARD OF EDUCATION

ENLARGED FLOOR PLANS

SHEET No.
A-401
PROJECT No.
26394.02

BID DOCUMENTS

G:\CLEANSTUFF-15-28\26394 Houston BOE Open End Projects\26394.02 - Cottonwood Fieldhouse\03 - Final Design\ARCHITECTURE\CHS Fieldhouse.rvt

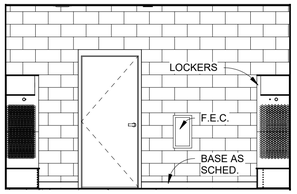

1 ELEVATION
1/4" = 1'-0"

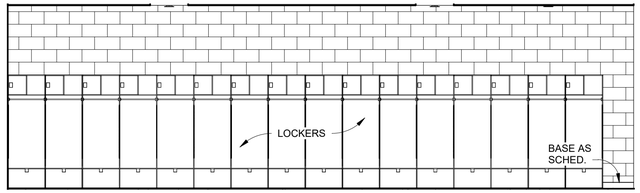

2 ELEVATION
1/4" = 1'-0"

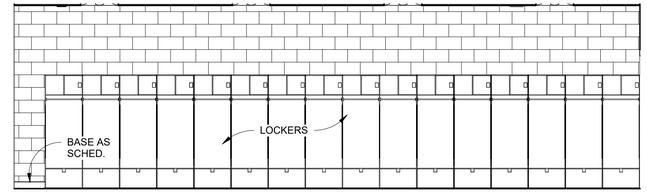

3 ELEVATION
1/4" = 1'-0"

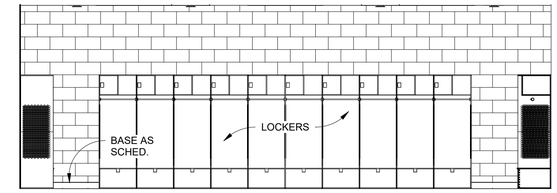

4 ELEVATION
1/4" = 1'-0"

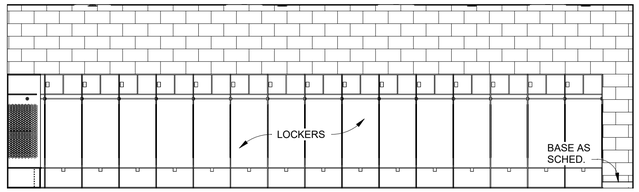

5 ELEVATION
1/4" = 1'-0"

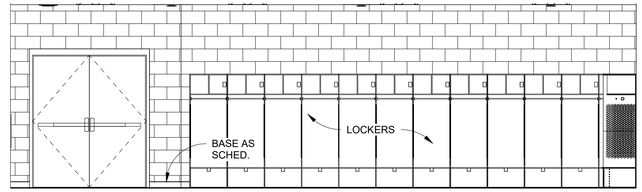

6 ELEVATION
1/4" = 1'-0"

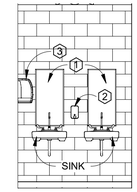

7 ELEVATION
1/4" = 1'-0"

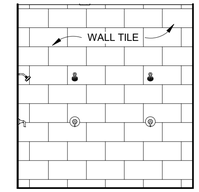

8 ELEVATION
1/4" = 1'-0"

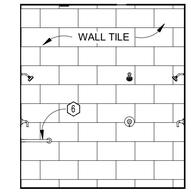

9 ELEVATION
1/4" = 1'-0"

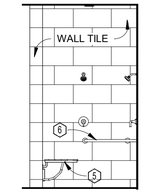

10 ELEVATION
1/4" = 1'-0"

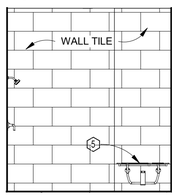

11 ELEVATION
1/4" = 1'-0"

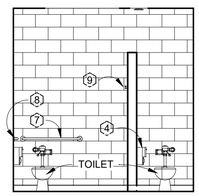

12 ELEVATION
1/4" = 1'-0"

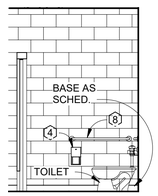

13 ELEVATION
1/4" = 1'-0"

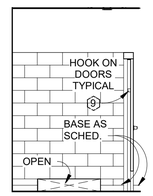

14 ELEVATION
1/4" = 1'-0"

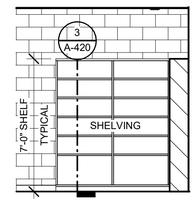

15 ELEVATION
1/4" = 1'-0"

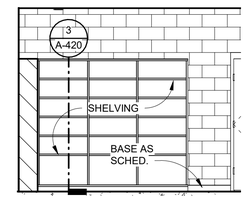

16 ELEVATION
1/4" = 1'-0"

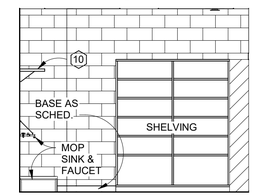

17 ELEVATION
1/4" = 1'-0"

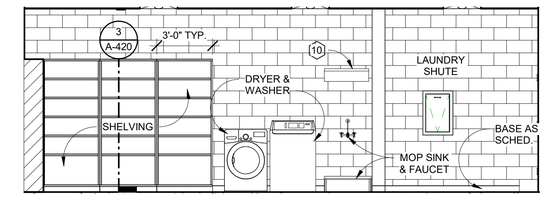

18 ELEVATION
1/4" = 1'-0"

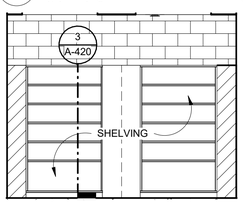

19 ELEVATION
1/4" = 1'-0"

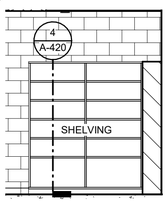

20 ELEVATION
1/4" = 1'-0"

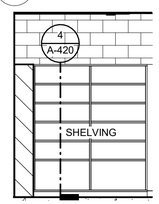

21 ELEVATION
1/4" = 1'-0"

22 ELEVATION
1/4" = 1'-0"

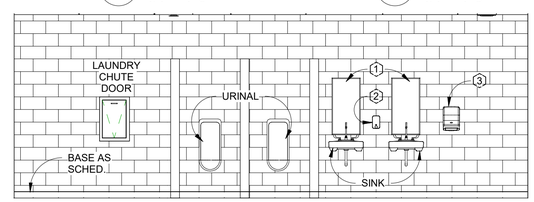

23 ELEVATION
1/4" = 1'-0"

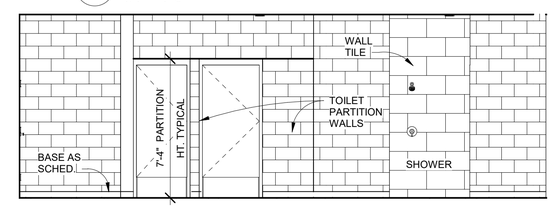

24 ELEVATION
1/4" = 1'-0"

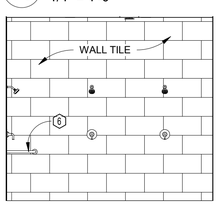

25 25 - Rm-106
1/4" = 1'-0"

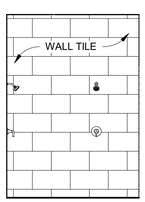

26 ELEVATION
1/4" = 1'-0"

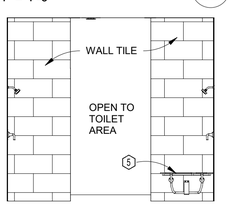

27 ELEVATION
1/4" = 1'-0"

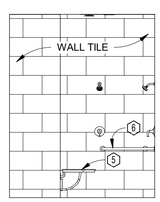

28 ELEVATION
1/4" = 1'-0"

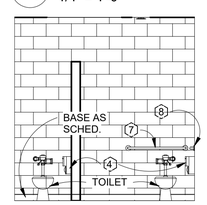

29 ELEVATION
1/4" = 1'-0"

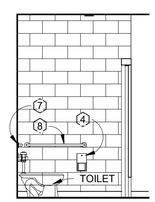

30 ELEVATION
1/4" = 1'-0"

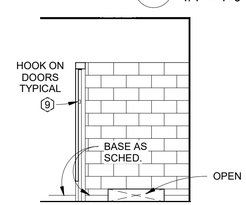

31 ELEVATION
1/4" = 1'-0"

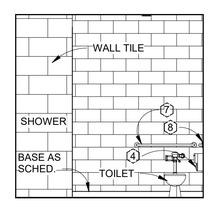

32 ELEVATION
1/4" = 1'-0"

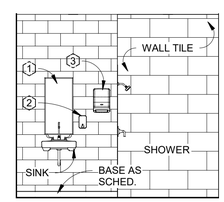

33 ELEVATION
1/4" = 1'-0"

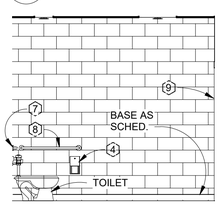

34 ELEVATION
1/4" = 1'-0"

0 2' 4' 8'
SCALE: 1/4"=1'-0"

STATE OF ALABAMA
CLAYTON M. WILKS
7609
03/17/22
REGISTERED ARCHITECT

POLY

Revision	REVISION DESCRIPTION	Date
1	Description	00-00-0000

DATE: MARCH 2022
REGISTRATION No. 7609
These drawings are copyrighted by Poly-Inc. Any use, partial or full reproduction is prohibited except by written Agreement with Poly-Inc.

DESIGNED BY: CMW
DRAWN BY: CMW
ENG/ARCH/SURVEYOR OF RECORD: CLAYTON M. WILKS
Cert. of Auth. No.: AL FL GA
ARCHITECT [AA-040] AA-001051 [001118] GA-1918 [001118]
ENGINEER CA-1VE CA-1918 [001118]
SURVEYOR

POLY, INC.
1935 Headland Avenue, Dothan, AL 36303
334-793-3003
102 Sunset Lane Suite 100 2135 University Blvd, Ste. A Tuscaloosa, AL 35401
Birmingham, AL 35209 205-752-4037
850-609-1100
WWW.POLY-INC.COM

COTTONWOOD HIGH SCHOOL FIELD HOUSE FOR HOUSTON COUNTY BOARD OF EDUCATION

INTERIOR ELEVATIONS

SHEET No.
A-410
PROJECT No.
26394.02

BID DOCUMENTS

4/29/2022 8:50:58 AM
INTERIOR ELEVATIONS
G:\CLEANSTUFF-15-26\26394 Houston BOE Open End Projects\26394.02 - Cottonwood Fieldhouse\03 - Final Design\ARCHITECTURE\CHS Fieldhouse.rvt

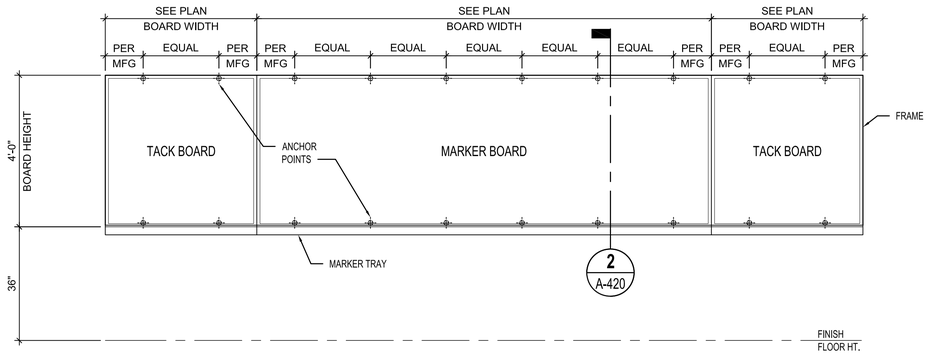

1 A-420 TYPICAL MARKER / TACK BOARD ELEVATION
SCALE: 1/2" = 1'-0"

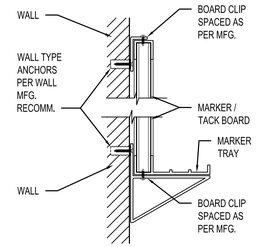

2 A-420 MARKER BOARD MOUNTING DETAIL
SCALE: 3" = 1'-0"

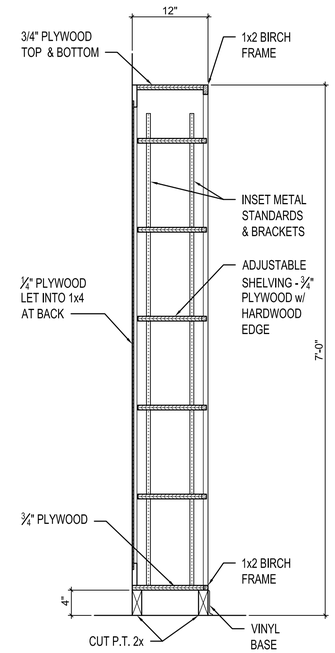

3 A-420 TALL SHELVING UNIT DETAIL
SCALE: 1" = 1'-0"

NOTE:
ALL PLYWOOD AND WOOD FOR SHELVING SHALL BE MAPLE AND CABINET GRADE. FINISH SHALL BE CLEAR COAT POLYURETHANE. SUBMIT SHOP DRAWINGS TO SHOW COMPLIANCE WITH DESIGN REQUIREMENTS.

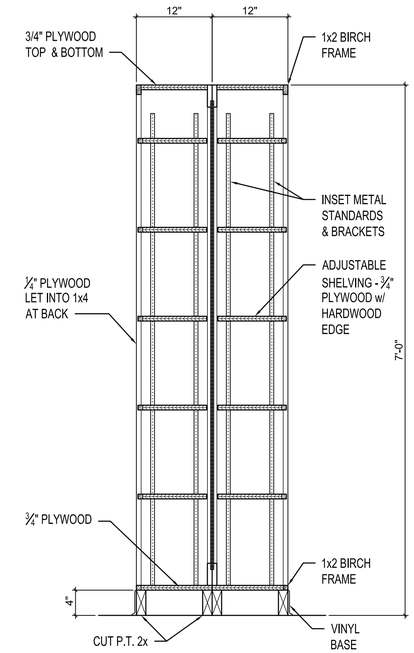

4 A-420 TALL SHELVING UNIT DETAIL (DOUBLE-SIDED)
SCALE: 1" = 1'-0"

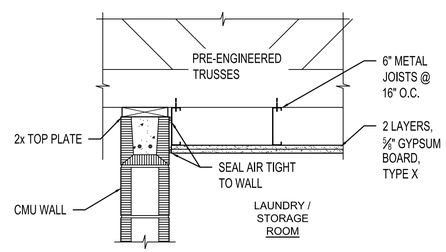

5 A-420 FIRE RATED CEILING DETAIL
SCALE: 1" = 1'-0"

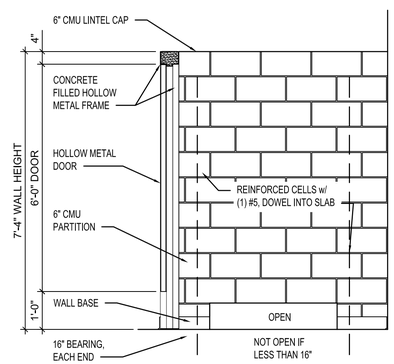

6 A-420 CMU TOILET PARTITION DETAIL
SCALE: 1/2" = 1'-0"

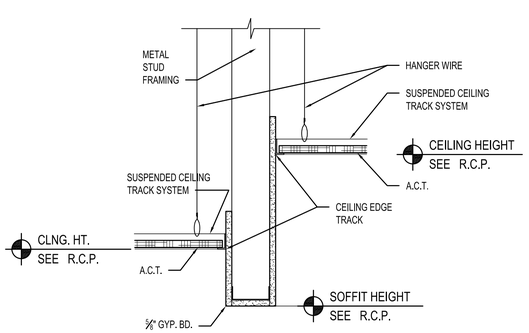

7 A-420 CEILING DETAIL
SCALE: 1 1/2" = 1'-0"

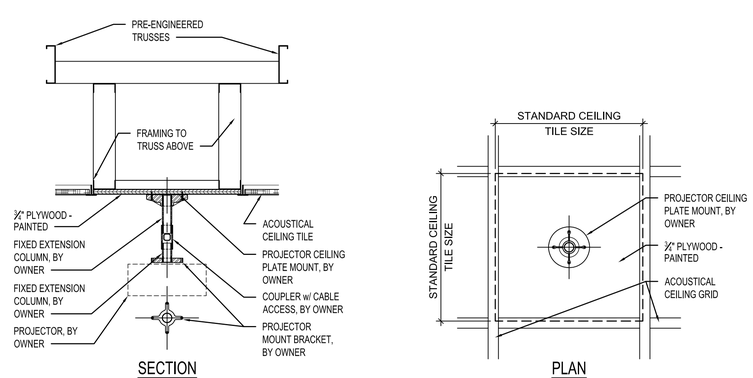

8 A-420 PROJECTOR CEILING MOUNT DETAIL
SCALE: 1" = 1'-0"

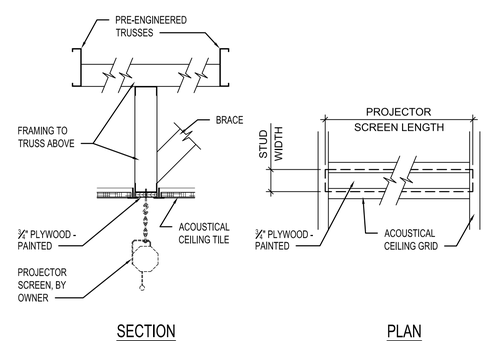

9 A-420 PROJECTOR SCREEN CEILING MOUNT DETAIL
SCALE: 1" = 1'-0"

GRAPHIC SCALE

2 1 0 2 4FT
SCALE: 1/2" = 1'-0"

6 4 2 0 6IN
SCALE: 3" = 1'-0"

1 6IN 0 1 2FT
SCALE: 1" = 1'-0"

STATE OF ALABAMA
CLAYTON M. WILKS
7609
03/17/22
REGISTERED ARCHITECT

POLY

Revision	Description	Date

DESIGNED BY: CMW
DRAWN BY: CMW
DATE: MARCH 2022
ENG / ARCH / SURVEYOR OF RECORD: CLAYTON M. WILKS
REGISTRATION No.
Cert. of Auth. No. — Fl. — Ga.
ARCHITECT C-AR450 AA-C001053 001118
ENGINEER C-ER-E C-ER-E 001118

These drawings are copyrighted by the property of Poly-Inc. Any use, partial or full reproduction is prohibited without written Agreement with Poly-Inc.

POLY, INC.
1935 Headland Avenue
Dothan, AL 36303
334-793-4700
102 Sunset Lane 2135 University Blvd, Ste. A
Shalimar, FL 32579 Tuscaloosa, AL 35401
850-609-1100 205-752-4037
WWW.POLY-INC.COM

NEW COTTONWOOD FIELDHOUSE / WEIGHTROOM BUILDING FOR HOUSTON COUNTY BOARD OF EDUCATION

INTERIOR DETAILS

SHEET No.
A-420
PROJECT No.
26-394.02

BID DOCUMENTS

Poly, Inc. - G:\CLEANSTUFF-15-28\26394 Houston BOE Open End Projects\26394.02 - Cottonwood Fieldhouse\03 - Final Design\ARCHITECTURE\CAD\26394.02_A-420 - INTERIOR DETAILS.dwg [Layout1] Last Printed: April 29, 2022 - 08:58am By: jbrady

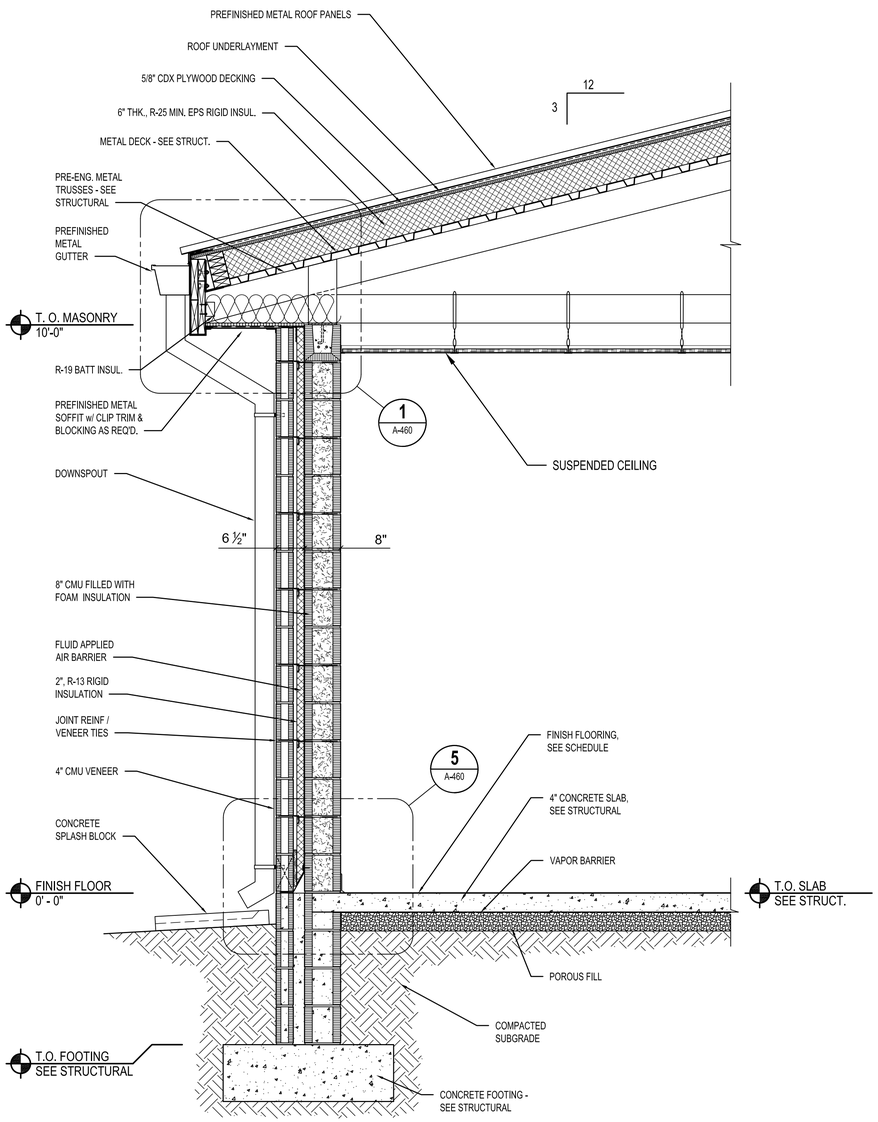

1 A-450 **WALL SECTION**
SCALE: 3/4" = 1'-0"

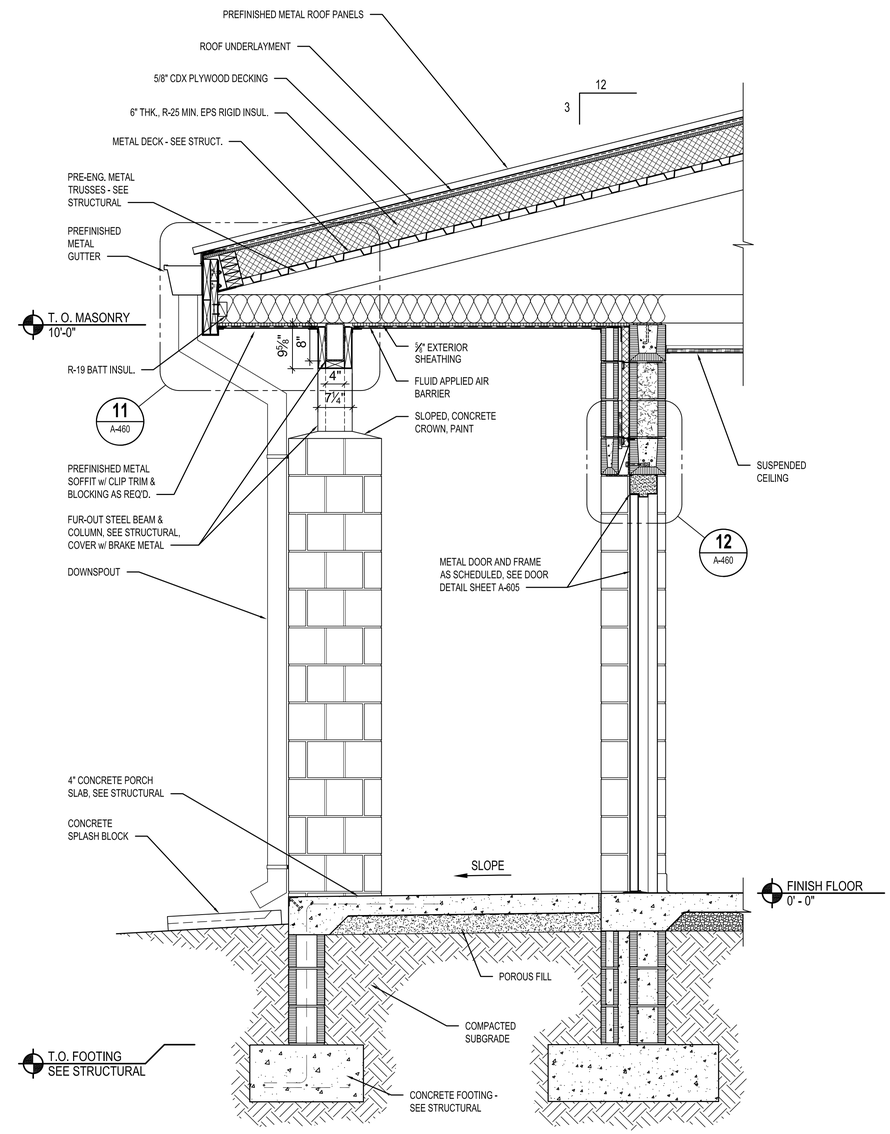

2 A-450 **PORCH SECTION**
SCALE: 3/4" = 1'-0"

GRAPHIC SCALE
1 0 1 2FT
SCALE: 3/4" = 1'-0"

STATE OF ALABAMA
CLAYTON M. WILAS
7609
03/17/22
REGISTERED ARCHITECT

POLY

Revision	Description	Date

DESIGNED BY: CMW
DRAWN BY: CMW
DATE: MARCH 2022
ENG / ARCH / SURVEYOR OF RECORD: REGISTRATION No.
CLAYTON M. WILAS
Cert. of Auth. No. FL CA
ARCHITECT CA-4490 AA-C001051 001118
ENGINEER CA-7936 CA-1918 001118

These drawings are copyrighted and the property of Poly-Inc. Any use, partial or full reproduction is prohibited without written Agreement with Poly-Inc.

POLY, INC.
1935 Headland Avenue
Dothan, AL 36303
334-793-4700
102 Sunset Lane
Shalimar, FL 32579
850-609-1100
2135 University Blvd, Ste. A
Tuscaloosa, AL 35401
205-752-4037
WWW.POLY-INC.COM

NEW COTTONWOOD FIELDHOUSE / WEIGHTROOM BUILDING FOR HOUSTON COUNTY BOARD OF EDUCATION

WALL SECTIONS

SHEET No.
A-450

PROJECT No.
26-394.02

BID DOCUMENTS

Poly, Inc. - G:\CLEANSTUFF-15-28\26394 Houston BOE Open End Projects\26394.02 - Cottonwood Fieldhouse\03 - Final Design\ARCHITECTURE\CAD\26394.02_A-450 - WALL SECTIONS.dwg [Layout1] Last Printed: April 27, 2022 - 10:58am By: jbrady

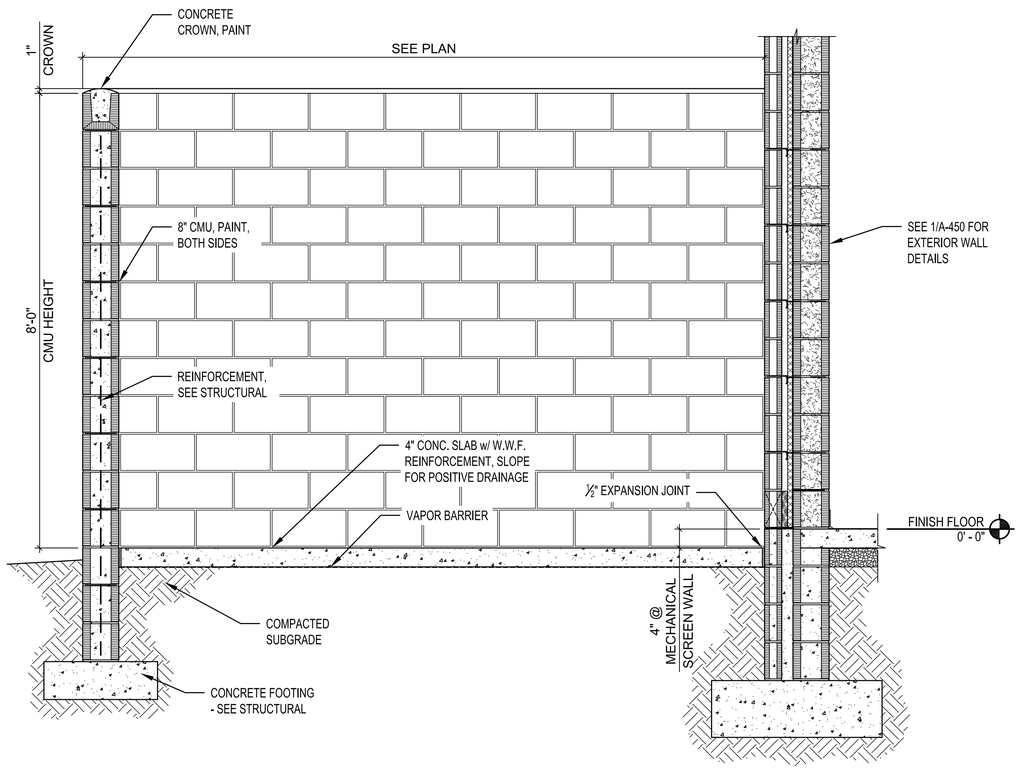

1 / A-451 SCREEN WALL SECTION

SCALE: 3/4" = 1'-0"

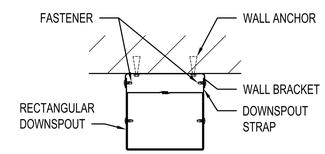

2 / A-451 TYPICAL DOWNSPOUT WALL ANCHOR DETAIL

SCALE: 3" = 1'-0"

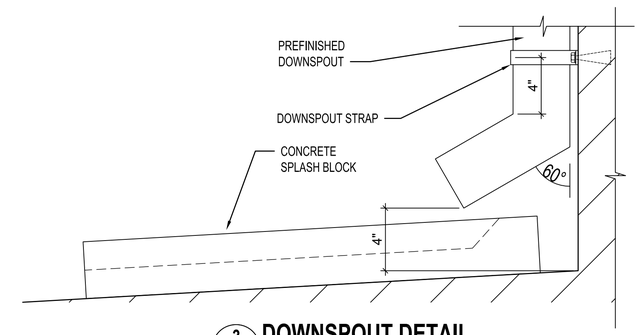

3 / A-451 DOWNSPOUT DETAIL

SCALE: 3" = 1'-0"

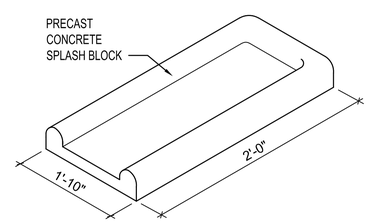

4 / A-451 TYPICAL SPLASH BLOCK DETAIL

SCALE: 1 1/2" = 1'-0"

GRAPHIC SCALE

1 0 1 2FT
SCALE: 3/4" = 1'-0"

6 4 2 0 6IN
SCALE: 3" = 1'-0"

1 0 1FT
SCALE: 1 1/2" = 1'-0"

STATE OF ALABAMA
CLAYTON M. WILKS
7609
03/17/22
REGISTERED ARCHITECT

POLY

Revision	Description	Date

DESIGNED BY: CMW
DRAWN BY: CMW
DATE: MARCH 2022
ENG / ARCH / SURVEYOR OF RECORD: CLAYTON M. WILKS
REGISTRATION No.
Cert. of Auth. No. AL
ARCHITECT CA-4469
ENGINEER CA-748
FL CA-8918
GA AA-001051 001118
001118
These drawings are copyrighted and the property of Poly-Inc. Any use, partial or full reproduction is prohibited without written Agreement with Poly-Inc.

POLY, INC.
1935 Headland Avenue
Dothan, AL 36303
334-793-4700
102 Sunset Lane
Shalimar, FL 32579
850-609-1100
2135 University Blvd., Ste. A
Tuscaloosa, AL 35401
205-752-4037
WWW.POLY-INC.COM

NEW COTTONWOOD FIELDHOUSE / WEIGHTROOM BUILDING FOR
HOUSTON COUNTY BOARD OF EDUCATION

EXTERIOR DETAILS

SHEET No.
A-451

PROJECT No.
26-394.02

BID DOCUMENTS

Poly, Inc. - G:\CLEANSTUFF-15-28\26394 Houston BOE Open End Projects\26394.02 - Cottonwood Fieldhouse\03 - Final Design\ARCHITECTURE\CAD\26394.02_A-451 - EXTERIOR DETAILS.dwg [Layout1] Last Printed: March 17, 2022 - 11:18am By: jbrady

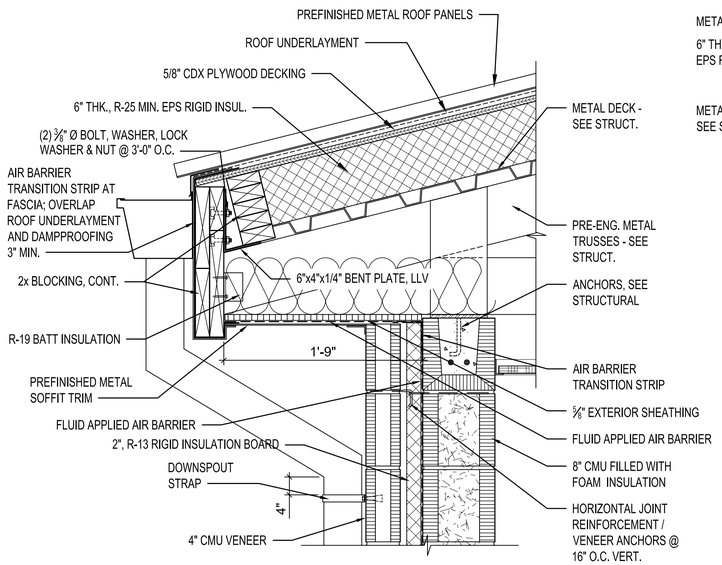

1 A-460 **EAVE DETAIL**
SCALE: 1 1/2" = 1'-0"

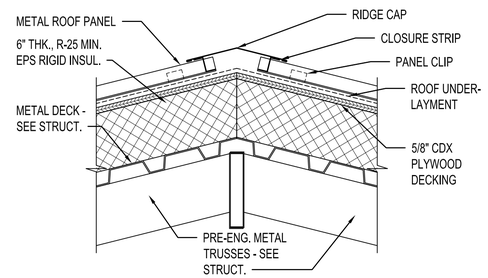

2 A-460 **RIDGE CAP DETAIL**
SCALE: 1 1/2" = 1'-0"

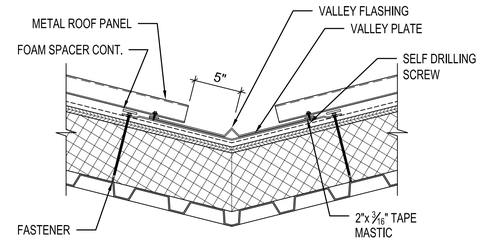

3 A-460 **ROOF VALLEY FLASHING DETAIL**
SCALE: 1 1/2" = 1'-0"

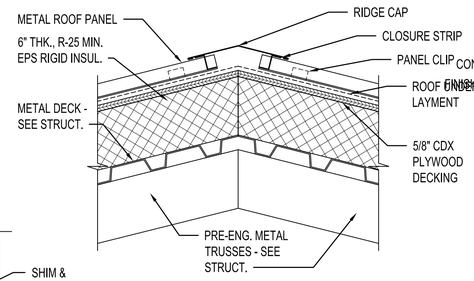

4 A-460 **RIDGE CAP DETAIL**
SCALE: 1 1/2" = 1'-0"

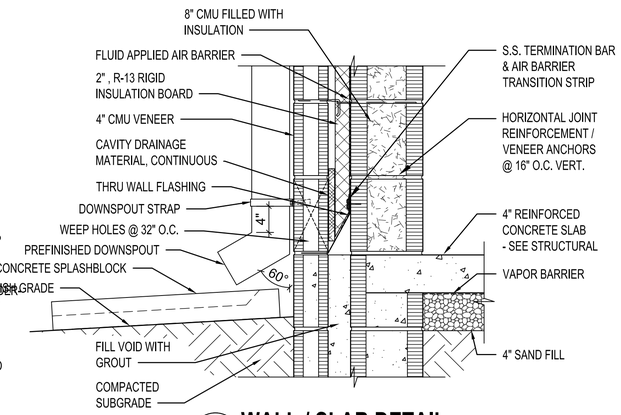

5 A-460 **WALL / SLAB DETAIL**
SCALE: 1 1/2" = 1'-0"

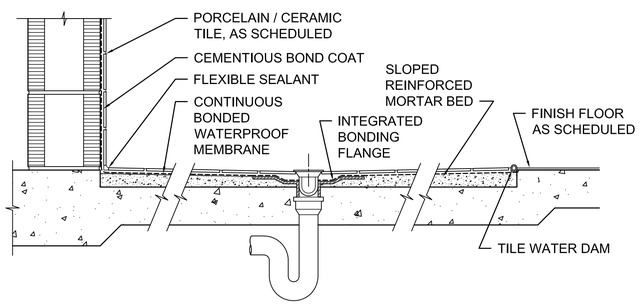

6 A-460 **TILE SHOWER SECTION**
SCALE: 1 1/2" = 1'-0"

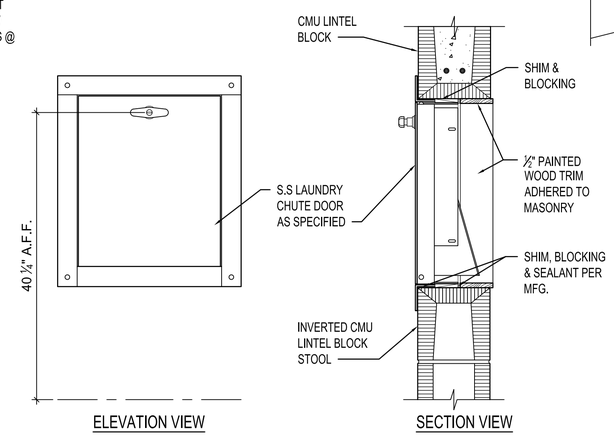

7 A-460 **LAUNDRY CHUTE DOOR DETAIL**
SCALE: 1 1/2" = 1'-0"

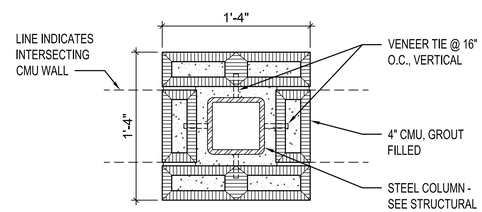

8 A-460 **COLUMN DETAIL**
SCALE: 1 1/2" = 1'-0"

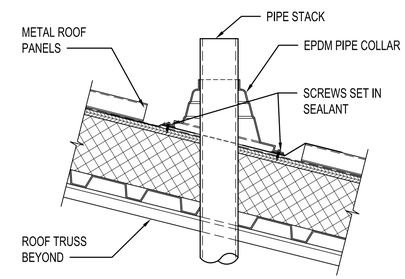

9 A-460 **PIPE THRU ROOF DETAIL**
SCALE: 1 1/2" = 1'-0"

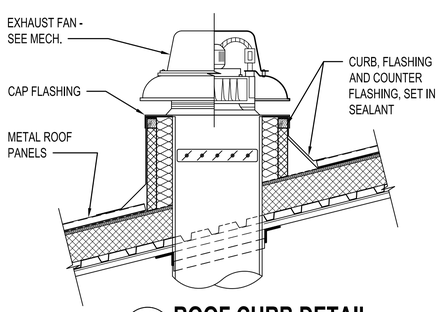

10 A-460 **ROOF CURB DETAIL**
SCALE: 3/4" = 1'-0"

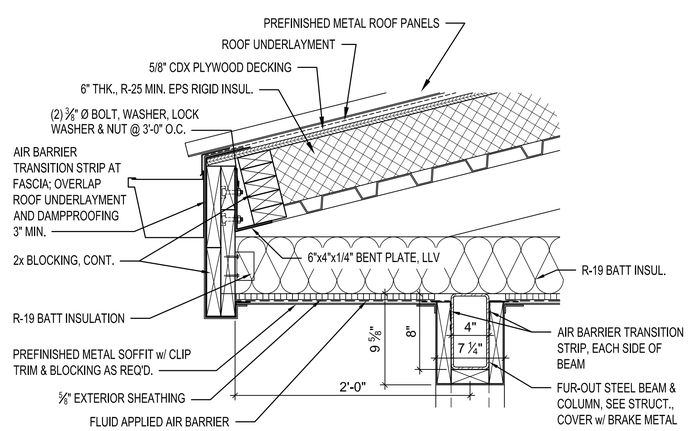

11 A-460 **EAVE DETAIL**
SCALE: 1 1/2" = 1'-0"

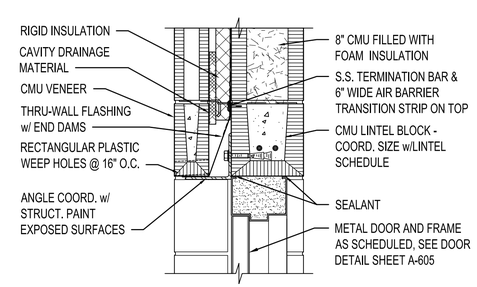

12 A-460 **FALSHING DETAIL**
SCALE: 1 1/2" = 1'-0"

GRAPHIC SCALE
1 0 1FT
SCALE: 1 1/2" = 1'-0"
1 0 1 2FT
SCALE: 3/4" = 1'-0"

STATE OF ALABAMA
CLAYTON M. WILKS
7609
03/17/22
REGISTERED ARCHITECT

POLY

Date	Description	Revision

DESIGNED BY: CMW
DRAWN BY: CMW
DATE: MARCH 2022
ENG / ARCH / SURVEYOR OF RECORD: REGISTRATION No.
CLAYTON M. WILKS
Cert. of Auth. No. | FL | GA
ARCHITECT | CA-4490 | AA-C001051 | 001118
ENGINEER | CA-7842E | CA-1818 | 001118
These drawings are copyrighted and the property of Poly-Inc. Any use, partial or full reproduction & distribution without written Agreement with Poly-Inc.

POLY, INC.
1935 Headland Avenue
Dothan, AL 36303
334-793-4700
102 Sunset Lane
Shalimar, FL 32579
850-609-1100
2135 University Blvd, Ste. A
Tuscaloosa, AL 35401
205-752-4037
WWW.POLY-INC.COM

NEW COTTONWOOD FIELDHOUSE / WEIGHTROOM BUILDING FOR HOUSTON COUNTY BOARD OF EDUCATION

SECTIONS AND DETAILS

SHEET No.
A-460
PROJECT No.
26-394.02

BID DOCUMENTS

Poly, Inc. - G:\CLEANSTUFF-15-28\26394 Houston BOE Open End Projects\26394.02 - Cottonwood Fieldhouse\03 - Final Design\ARCHITECTURE\CAD\26394.02_A-460 - SECTIONS AND DETAILS.dwg [Layout1] Last Printed: April 27, 2022 - 11:04am By: jbrady

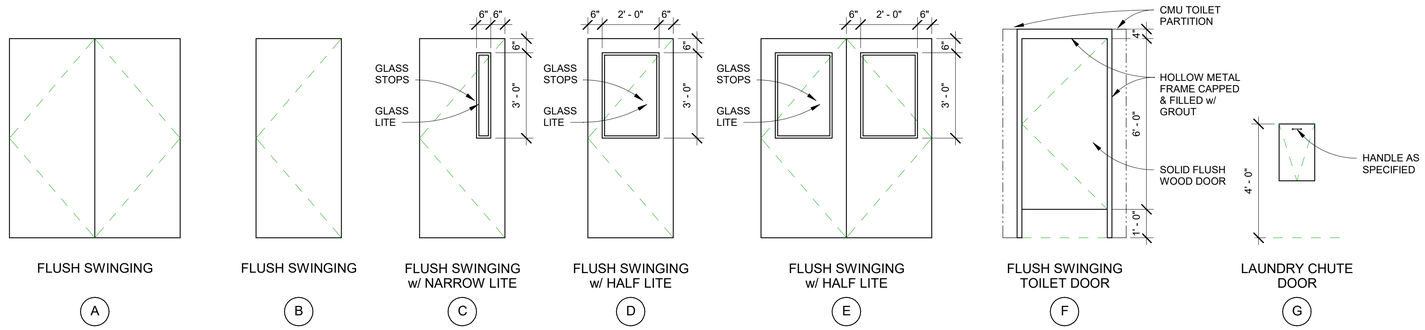

DOOR TYPES

SCALE 3/8" = 1'-0"

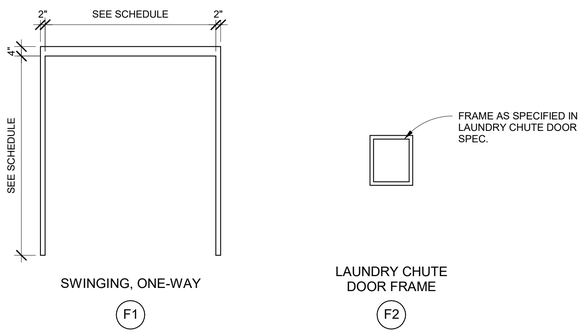

DOOR FRAME TYPES

SCALE 3/8" = 1'-0"

DOOR SCHEDULE

NUMBER	DOOR LOCATION: TO ROOM	DOOR LOCATION: FROM ROOM	DOORS: SIZE: WIDTH	SIZE: HEIGHT	SIZE: THICK	UL LABEL	DOOR TYPE	SINGLE	PAIR	INTERIOR	EXTERIOR	DOOR UNDER CUT	DOOR MATERIAL	GLASS	FRAMES: FRAME MATERIAL	FRAME TYPE	DETAILS: HEAD	JAMB	SILL	HRDWR. SET NO.	REMARKS
100a	114 COVERED ENTRY	100 WEIGHT ROOM	6' - 0"	7' - 0"	0' - 1 3/4"		E		X		X		H.M.	G2	H.M.	F1	1/A-605	2/A-605	3/A-605	1	
100b	115 COVERED ENTRY	100 WEIGHT ROOM	6' - 0"	7' - 0"	0' - 1 3/4"		E		X		X		H.M.	G2	H.M.	F1	1/A-605	2/A-605	3/A-605	1	
101a	101 OFFICE	100 WEIGHT ROOM	3' - 0"	7' - 0"	0' - 1 3/4"		D	X		X			WD.	G2	H.M.	F1	4/A-605	5/A-605	6/A-605	3A	
101b	101 OFFICE	102 COACH'S MEETING ROOM	3' - 0"	7' - 0"	0' - 1 3/4"		B	X		X			WD.	G2	H.M.	F1	4/A-605	5/A-605	6/A-605	3A	
102	102 COACH'S MEETING ROOM	105 BOYS LOCKER ROOM	3' - 0"	7' - 0"	0' - 1 3/4"		D	X		X			WD.	G2	H.M.	F1	4/A-605	5/A-605	6/A-605	3A	
103	103 COACH'S TOILET / SHOWER	102 COACH'S MEETING ROOM	3' - 0"	7' - 0"	0' - 1 3/4"		B	X		X			WD.		H.M.	F1	4/A-605	5/A-605	6/A-605	3B	
104	115 COVERED ENTRY	104 EQUIPMENT STORAGE	6' - 0"	7' - 0"	0' - 1 3/4"		A		X		X		H.M.		H.M.	F1	1/A-605	2/A-605	3/A-605	2	
105a	115 COVERED ENTRY	105 BOYS LOCKER ROOM	6' - 0"	7' - 0"	0' - 1 3/4"		A		X		X		H.M.		H.M.	F1	1/A-605	2/A-605	3/A-605	1	
105b	104 EQUIPMENT STORAGE	105 BOYS LOCKER ROOM	3' - 0"	7' - 0"	0' - 1 3/4"		B	X		X			WD.		H.M.	F1	4/A-605	5/A-605	6/A-605	3A	
106a	106 BOYS RESTROOM	100 WEIGHT ROOM	3' - 0"	7' - 0"	0' - 1 3/4"		B	X		X			WD.		H.M.	F1	4/A-605	5/A-605	6/A-605	6	
106b	106 BOYS RESTROOM	106 BOYS RESTROOM	2' - 8"	6' - 0"	0' - 1 3/4"		F	X		X			P.LAM.		H.M.	F1	8/A-605	7/A-605	8/A-605	5	
106c	106 BOYS RESTROOM	106 BOYS RESTROOM	3' - 0"	6' - 0"	0' - 1 3/4"		F	X		X			P.LAM.		H.M.	F1	8/A-605	7/A-605	8/A-605	5	
107a	108 CORRIDOR	107 LAUNDRY / STORAGE	3' - 0"	7' - 0"	0' - 1 3/4"	45min	B	X		X			WD.		H.M.	F1	4/A-605	5/A-605	6/A-605	3A	
107b	107 LAUNDRY / STORAGE	105 BOYS LOCKER ROOM	3' - 0"	7' - 0"	0' - 1 3/4"	45min	B	X		X			WD.		H.M.	F1	4/A-605	5/A-605	6/A-605	3A	
109	108 CORRIDOR	109 CLASSROOM	3' - 0"	7' - 0"	0' - 1 3/4"		C	X		X			WD.	G2	H.M.	F1	4/A-605	5/A-605	6/A-605	3	
109A	109A COVERED ENTRY	109 CLASSROOM	3' - 0"	7' - 0"	0' - 1 3/4"		C	X			X		H.M.	G2	H.M.	F1	1/A-605	2/A-605	3/A-605	4	
110	110 STORAGE	108 CORRIDOR	3' - 0"	7' - 0"	0' - 1 3/4"		B	X		X			WD.		H.M.	F1	4/A-605	5/A-605	6/A-605	3A	
111	100 WEIGHT ROOM	111 MECH / ELEC	6' - 0"	7' - 0"	0' - 1 3/4"		A		X	X			WD.		H.M.	F1	4/A-605	5/A-605	6/A-605	7	
112a	112 GIRLS RESTROOM	108 CORRIDOR	3' - 0"	7' - 0"	0' - 1 3/4"		B	X		X			WD.		H.M.	F1	4/A-605	5/A-605	6/A-605	6	
112b	112 GIRLS RESTROOM	112 GIRLS RESTROOM	2' - 8"	6' - 0"	0' - 1 3/4"		F	X		X			P.LAM.		H.M.	F1	8/A-605	7/A-605	8/A-605	5	
112c	112 GIRLS RESTROOM	112 GIRLS RESTROOM	3' - 0"	6' - 0"	0' - 1 3/4"		F	X		X			P.LAM.		H.M.	F1	8/A-605	7/A-605	8/A-605	5	
113	109A COVERED ENTRY	113 GIRLS LOCKER ROOM	3' - 0"	7' - 0"	0' - 1 3/4"		B	X			X		H.M.		H.M.	F1	1/A-605	2/A-605	3/A-605	4	
114	108 CORRIDOR	107 LAUNDRY / STORAGE	1' - 3"	1' - 6"	0' - 1 3/4"	45min	G	X		X			S.S.		S.S.	F2	9/A-605	10/A-605	11/A-605	8	
115	106 BOYS RESTROOM	107 LAUNDRY / STORAGE	1' - 3"	1' - 6"	0' - 1 3/4"	45min	G	X		X			S.S.		S.S.	F2	9/A-605	10/A-605	11/A-605	8	

H.M. - HOLLOW METAL P.LAM. - PLASTIC LAMINATE FINISH S.S. - STAINLESS STEEL WD. - WOOD

REMARKS:

1.

HARDWARE SETS

HARDWARE SET 1 (DOUBLE H.M., EXTERIOR, EGRESS) (ENTRY FUNCTION)
3 PAIR HINGE
1 EACH KEY OPERATED CENTER MULLION
2 EACH PANIC EXIT DEVICE
2 EACH PULL HANDLE
2 EACH SURFACE CLOSER
1 EACH ADA THRESHOLD
1 EACH GASKETING
2 EACH SWEEP
2 EACH KICK PLATE

HARDWARE SET 2 (DOUBLE H.M., EXTERIOR, SERVICE/STORAGE) (STOREROOM FUNCTION)
3 PAIR HINGE
1 EACH LOCKSET
2 EACH DOOR SWING CONTROL ARM WITH HOLD OPEN FUNCTION
2 EACH FLUSH BOLTS
1 EACH THRESHOLD
1 EACH GASKETING
1 EACH ASTRAGAL
2 EACH SWEEP

HARDWARE SET 3 (SINGLE H.M., INTERIOR) (CLASSROOM FUCTION)
1 1/2 PAIR HINGE
1 EACH LOCKSET
1 EACH DOOR STOP, WALL-MOUNTED

HARDWARE SET 3A (SINGLE H.M., INTERIOR) (OFFICE/STOREROOM FUCTION)
SAME HARDWARE AS HARDWARE SET 3.

HARDWARE SET 3B (SINGLE H.M., INTERIOR) (PRIVACY FUCTION)
SAME HARDWARE AS HARDWARE SET 3.

HARDWARE SET 4 (SINGLE H.M., EXTERIOR, EGRESS) (ENTRY FUCTION)
1 1/2 PAIR HINGE
1 EACH PANIC EXIT DEVICE
1 EACH SURFACE CLOSER
1 EACH THRESHOLD
1 EACH GASKETING
2 EACH SWEEP
1 EACH KICK PLATE
1 EACH DOOR STOP, FLOOR-MOUNTED

HARDWARE SET 5 (SINGLE WOOD, TOILET STALL) (PRIVACY FUCTION)
1 1/2 PAIR HINGE, SELF-CLOSING
1 EACH THUMB-TURN DEAD BOLT WITH OCCUPIED INDICATOR
2 EACH SMALL PULL HANDLES
1 EACH DOOR STOP, LIGATURE RESISTANT TYPE; BASIS OF DESIGN: KINGSWAY KG185. MOUNT DOOR STOP NEAR DOOR HEAD ON TOILET PARTITION.

HARDWARE SET 6 (SINGLE H.M., INTERIOR) (PASSAGE FUCTION)
1 1/2 PAIR HINGE
1 EACH PUSH PLATE
1 EACH PULL HANDLE
1 EACH SURFACE CLOSER
1 EACH KICK PLATE
1 EACH DOOR STOP, WALL-MOUNTED

HARDWARE SET 7 (DOUBLE H.M., INTERIOR) (STOREROOM FUCTION)
3 PAIR HINGE
1 EACH LOCKSET
2 EACH DOOR SWING CONTROL ARM WITH HOLD OPEN FUNCTION
2 EACH FLUSH BOLTS
1 EACH THRESHOLD
1 EACH ASTRAGAL

HARDWARE SET 8 PER LAUNDRY DOOR SPEC

0 2' 4' 8'
SCALE: 1/4"=1'-0"

STATE OF ALABAMA
CLAYTON M. WILKS
7609
03/17/22
REGISTERED ARCHITECT

POLY

Revision	REVISION DESCRIPTION	Date
		00-00-0000

DATE: MARCH 2022
REGISTRATION No. 7609
These drawings are copyrighted and the property of Poly-Inc. Any use, partial or full reproduction is prohibited except by written Agreement with Poly-Inc.

DESIGNED BY: CMW
DRAWN BY: CMW
ENG/ARCH/SURVEYOR OF RECORD: CLAYTON M. WILKS
Cert. of Auth. No. AL 7609 FL AA-C001651 GA 001118
ARCHITECT CA-4480 AA-C001651 001118
ENGINEER CA-7-E CA-1878 001118
SURVEYOR

POLY, INC.
1935 Headland Avenue, Dothan, Alabama 36303
334-793-4-7003
102 Sunset Lane 2135 University Blvd, Ste. A
Shalimar, FL 32579 Tuscaloosa, AL 35401
850-609-1100 205-752-4037
WWW.POLY-INC.COM

COTTONWOOD HIGH SCHOOL FIELD HOUSE FOR HOUSTON COUNTY BOARD OF EDUCATION

DOOR TYPES AND SCHEDULE

SHEET No.
A-600
PROJECT No.
26394.02

BID DOCUMENTS

4/26/2022 3:20:06 PM
DOOR TYPES AND SCHEDULE
G:\CLEANSTUFF-15-28\26394 Houston BOE Open End Projects\26394.02 - Cottonwood Fieldhouse\03 - Final Design\ARCHITECTURE\CHS Fieldhouse.rvt

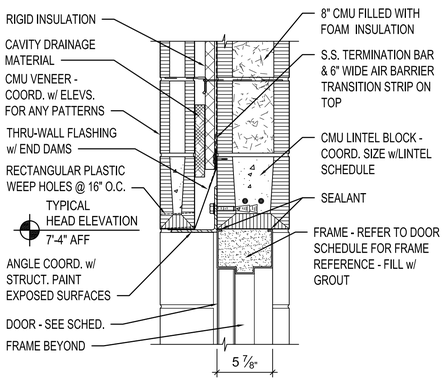

1 A-605 **HEAD DETAIL**
SCALE: 1 1/2" = 1'-0"

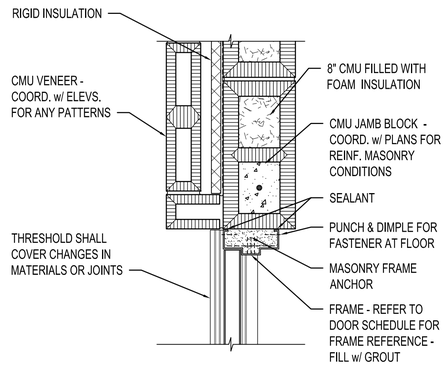

2 A-605 **JAMB DETAIL**
SCALE: 1 1/2" = 1'-0"

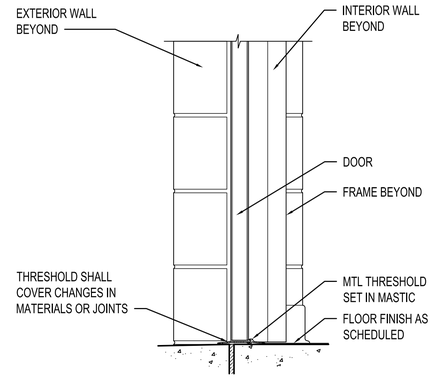

3 A-605 **SILL DETAIL**
SCALE: 1 1/2" = 1'-0"

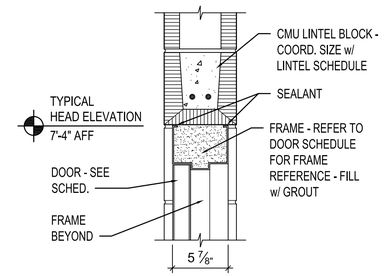

4 A-605 **HEAD DETAIL**
SCALE: 1 1/2" = 1'-0"

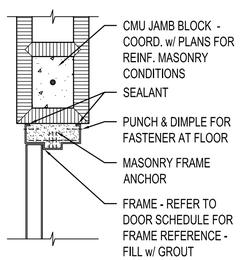

5 A-605 **JAMB DETAIL**
SCALE: 1 1/2" = 1'-0"

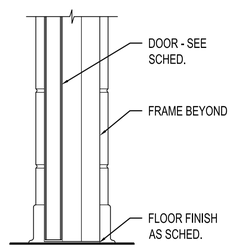

6 A-605 **SILL DETAIL**
SCALE: 1 1/2" = 1'-0"

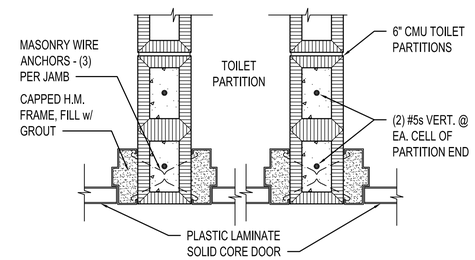

7 A-605 **JAMB DETAIL**
SCALE: 1 1/2" = 1'-0"

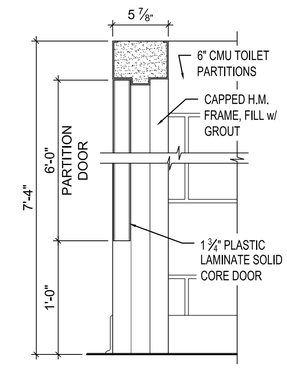

8 A-605 **HEAD / SILL DETAIL**
SCALE: 1 1/2" = 1'-0"

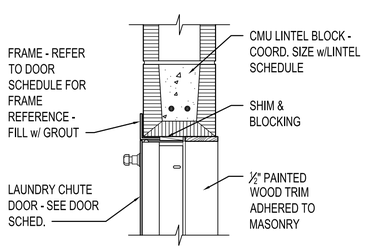

9 A-605 **HEAD DETAIL**
SCALE: 1 1/2" = 1'-0"

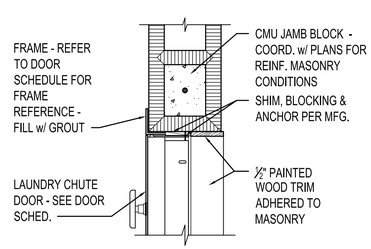

10 A-605 **JAMB DETAIL**
SCALE: 1 1/2" = 1'-0"

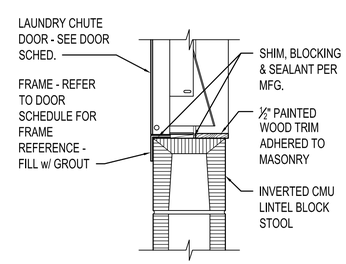

11 A-605 **SILL DETAIL**
SCALE: 1 1/2" = 1'-0"

GRAPHIC SCALE
1 0 1FT
SCALE: 1 1/2" = 1'-0"

STATE OF ALABAMA
CLAYTON M. WILAS
7609
03/17/22
REGISTERED ARCHITECT

POLY

Revision	Description	Date

DATE: MARCH 2022
DRAWN BY: CMW
DESIGNED BY: CMW
ENG / ARCH / SURVEYOR OF RECORD: REGISTRATION No.
CLAYTON M. WILAS
Cert. of Auth. No. AL FL GA.
ARCHITECT CA-4490 AA-C001051 001118
ENGINEER CA-7-E CA-918 001118

These drawings are copyrighted and the property of Poly-Inc. Any use, partial or full reproduction is prohibited without written Agreement with Poly-Inc.

POLY, INC.
1935 Headland Avenue
Dothan, AL 36303
334-793-4700
102 Sunset Lane 2135 University Blvd. Ste. A
Shalimar, FL 32579 Tuscaloosa, AL 35401
850-609-1100 205-752-4037
WWW.POLY-INC.COM

NEW COTTONWOOD FIELDHOUSE / WEIGHTROOM BUILDING FOR HOUSTON COUNTY BOARD OF EDUCATION

DOOR DETAILS

SHEET No.
A-605
PROJECT No.
26-394.02

BID DOCUMENTS

Poly, Inc. - G:\CLEANSTUFF-15-28\26394 Houston BOE Open End Projects\26394.02 - Cottonwood Fieldhouse\03 - Final Design\ARCHITECTURE\CAD\26394.02_A-605 - DOOR DETAILS.dwg [Layout1] Last Printed: March 17, 2022 - 11:15am By: jbrady

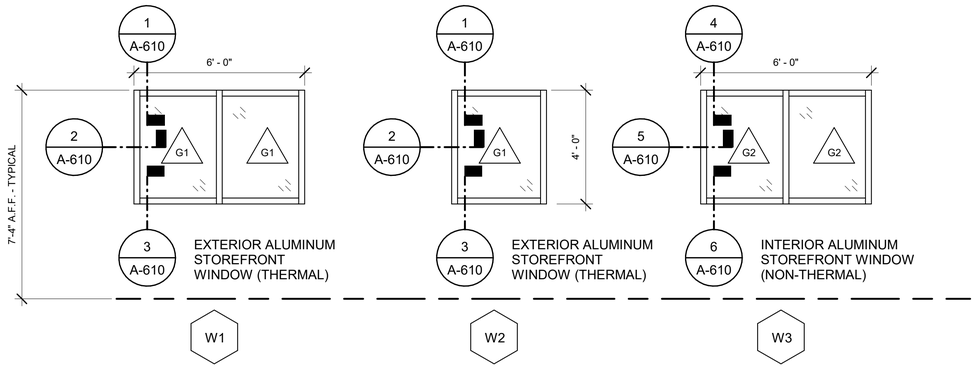

WINDOW TYPES

SCALE 3/8" = 1'-0"

GLAZING LEGEND

G1	1" INSULATED GLASS UNIT CONSISTING OF THE FOLLOWING; EXTERIOR PANEL: 1/4" LOW E, TEMPERED, 1/2" AIR SPACE INTERIOR PANEL: 1/4", CLEAR, TEMPERED
G2	1/4" TEMPERED GLASS, CLEAR

0 6' 12' 24'

SCALE: 3/8"=1'-0"

STATE OF ALABAMA
CLAYTON M. WILKS
7609
03/17/22
REGISTERED ARCHITECT

POLY

Revision	REVISION DESCRIPTION	Date
		00-00-0000

DESIGNED BY: CMW
DRAWN BY: CMW
DATE: MARCH 2022
ENG/ARCH/SURVEYOR OF RECORD: CLAYTON M. WILKS
REGISTRATION No. 7609
Cert. of Auth. No. AL FL GA
ARCHITECT CA-4480 AA-C001551 001118
ENGINEER CA-74-E CA-1818 001118
SURVEYOR

These drawings are copyrighted and the property of Poly-Inc. Any use, partial or full reproduction is prohibited except by written Agreement with Poly-Inc.

POLY, INC.
1935 Headland Avenue,
Dothan, Alabama
334-793-4700
102 Sunset Lane 2135 University Blvd, Ste. A
Shalimar, FL 32579 Tuscaloosa, AL 35401
850-609-1100 205-752-4037
WWW.POLY-INC.COM

COTTONWOOD HIGH SCHOOL FIELD HOUSE FOR HOUSTON COUNTY BOARD OF EDUCATION

WINDOW TYPES

SHEET No.
A-610

PROJECT No.
26394.02

BID DOCUMENTS

4/26/2022 3:17:54 PM
WINDOW TYPES
G:\CLEANSTUFF-15-28\26394 Houston BOE Open End Projects\26394.02 - Cottonwood Fieldhouse\03 - Final Design\ARCHITECTURE\CHS Fieldhouse.rvt

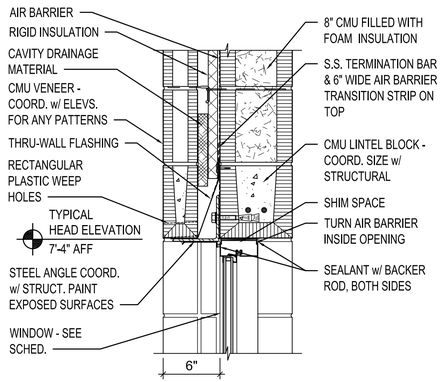

1 A-615 **HEAD DETAIL**
SCALE: 1 1/2" = 1'-0"

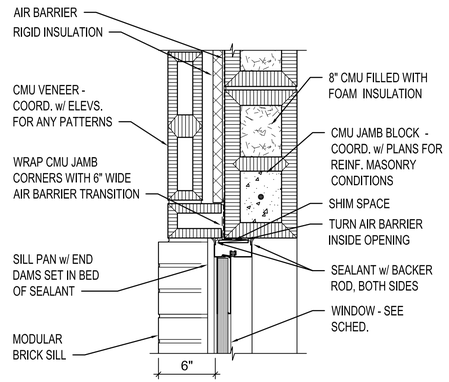

2 A-615 **JAMB DETAIL**
SCALE: 1 1/2" = 1'-0"

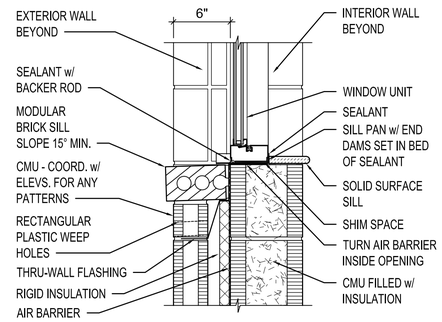

3 A-615 **SILL DETAIL**
SCALE: 1 1/2" = 1'-0"

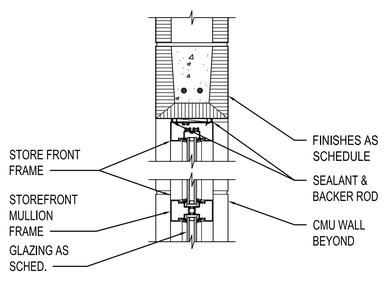

4 A-615 **HEAD DETAIL**
SCALE: 1 1/2" = 1'-0"

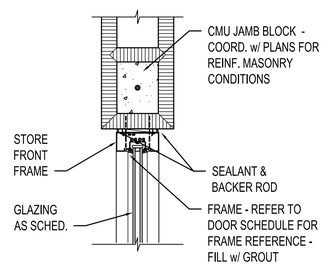

5 A-615 **JAMB DETAIL**
SCALE: 1 1/2" = 1'-0"

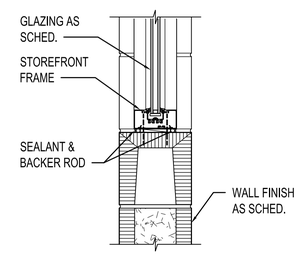

6 A-615 **SILL DETAIL**
SCALE: 1 1/2" = 1'-0"

GRAPHIC SCALE
1 0 1 2FT
SCALE: 3/4" = 1'-0"

STATE OF ALABAMA
CLAYTON M. WILKS
7609
03/17/22
REGISTERED ARCHITECT

Revision	Description	Date

DESIGNED BY: CMW
DRAWN BY: CMW
DATE: MARCH 2022
ENG / ARCH / SURVEYOR OF RECORD: CLAYTON M. WILKS
REGISTRATION No.

	Cert. of Auth. No.	AL	FL	GA
ARCHITECT	C-AA640	AA-C001501	001116	
ENGINEER	C-A-752	C-A-1818	001118	

These drawings are copyrighted and the property of Poly-Inc. Any use, partial or full reproduction is prohibited without written Agreement with Poly-Inc.

POLY, INC.
1935 Headland Avenue
Dothan, AL 36303
334-793-4700
102 Sunset Lane 2135 University Blvd, Ste. A
Shalimar, FL 32579 Tuscaloosa, AL 35401
850-609-1100 205-752-4037
WWW.POLY-INC.COM

NEW COTTONWOOD FIELDHOUSE / WEIGHTROOM BUILDING FOR HOUSTON COUNTY BOARD OF EDUCATION

WINDOW DETAILS

SHEET No.
A-615

PROJECT No.
26-394.02

BID DOCUMENTS

Poly, Inc. - G:\CLEANSTUFF-15-28\26394 Houston BOE Open End Projects\26394.02 - Cottonwood Fieldhouse\03 - Final Design\ARCHITECTURE\CAD\26394.02_A-615 - WINDOW DETAILS.dwg [Layout1] Last Printed: March 17, 2022 - 11:14am By: jbrady

FINISH SCHEDULE							
Number	Name	Floor Finish	Base Finish	Wall Finish	Ceiling Finish	Ceiling Height	Remarks
100	WEIGHT ROOM	RAF	RB	PTI	ACT 1	SEE R.C.P.	
101	OFFICE	RAF	RB	PTI	ACT 1	SEE R.C.P.	
102	COACH'S MEETING ROOM	RAF	RB	PTI	ACT 1	SEE R.C.P.	
103	COACH'S TOILET / SHOWER	CTF	RB/CTW	PT / CTW	ACT 2	SEE R.C.P.	
104	EQUIPMENT STORAGE	RAF	RB	PTI	ACT 1	SEE R.C.P.	
105	BOYS LOCKER ROOM	RAF	RB	PTI	ACT 1	SEE R.C.P.	
106	BOYS RESTROOM	CTF	CTB	PTI	ACT 2	SEE R.C.P.	
106A	SHOWER	CTF	CTW	CTW	ACT 2	SEE R.C.P.	
107	LAUNDRY / STORAGE	RAF	RB	PTI	ACT 1	SEE R.C.P.	
108	CORRIDOR	RAF	RB	PTI	ACT 1	SEE R.C.P.	
109	CLASSROOM	RAF	RB	PTI	ACT 1	SEE R.C.P.	
109A	COVERED ENTRY	NONE	NONE	NONE	NONE	SEE R.C.P.	
110	STORAGE	RAF	RB	PTI	ACT 1	SEE R.C.P.	
111	MECH / ELEC	RAF	RB	PTI	ACT 1	SEE R.C.P.	
112	GIRLS RESTROOM	CTF	CTB	PTI	ACT 2	SEE R.C.P.	
112A	SHOWER	CTF	CTW	CTW	ACT 2	SEE R.C.P.	
113	GIRLS LOCKER ROOM	RAF	RB	PTI	ACT 1	SEE R.C.P.	
114	COVERED ENTRY	NONE	NONE	PTE	SP	SEE R.C.P.	
114	COVERED ENTRY	NONE	NONE	PTE	SP	SEE R.C.P.	
115	COVERED ENTRY	NONE	NONE	PTE	SP	SEE R.C.P.	

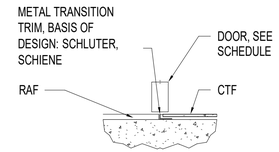

INTERIOR (IT)
THRESHOLD TYPE 1

SCALE: 1 1/2" = 1'-0"

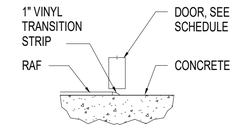

INTERIOR (IT)
THRESHOLD TYPE 2

SCALE: 1 1/2" = 1'-0"

INTERIOR FLOOR MATERIAL TRANSITION DETAILS

FINISH SCHEDULE LEGEND:

(ALL MANUFACTURERS LISTED BELOW ARE BASIS-OF-DESIGN)

(CTF) CERAMIC / PORCELAIN FLOOR TILE
DALTILE, STYLE: SANTINO OR PRE-APPROVED EQUAL
SIZE: 12x24x3/8" THICK, COLOR: SELECTED FROM MANUF.
FULL RANGE OF COLORS, INSTALLATION METHOD: STAGGERED BRICK JOINT

(CTM) CERAMIC / PORCELAIN TILE MOSAIC
DALTILE, STYLE: KEYSTONES OR PRE-APPROVED EQUAL
SIZE: 2" HEXAGON, COLOR: SELECTED FROM MANUF.
FULL RANGE OF COLORS

(CTB) CERAMIC / PORCELAIN TILE BASE
DALTILE, STYLE: SANTINO OR PRE-APPROVED EQUAL
SIZE: 6x24x3/8" THICK, COVE BASE, COLOR: SELECTED
FROM MANUF. FULL RANGE OF COLORS

(CTW) CERAMIC / PORCELAIN WALL TILES
WALL: DALTILE, STYLE: SANTINO OR PRE-APPROVED EQUAL
SIZE: 12x24x3/8" THICK, COLOR: SELECTED FROM MANUF.
FULL RANGE OF COLORS, INSTALLATION METHOD: HORIZONTAL
STACK BOND JOINT
FLOOR:DALTILE, STYLE: KEYSTONES, SIZE: 2x2, FROM MANUF.
FULL RANGE OF COLORS

SHOWER TILE EDGE TRIM:
PROVIDE SCHLUTER SYSTEMS - QUADEC OR EQUAL ALUMINUM TRIM AT EDGES OF WALL TILES. INCLUDE CORNER PIECES AS REQUIRED.

(RAF) RUBBER ATHLETIC SHEET FLOORING
TARKETT – REPLAY, 3/8" THICKNESS, COLOR SELECTED FROM MANUFACTURER'S STANDARD COLORS.

(RB) RUBBER BASE
JOHNSONITE, 4" COVE, COLOR SELECTED FROM MANUFACTURER'S STANDARD COLORS.

(ACT 1) ACOUSTICAL CEILING TILE
ARMSTRONG INDUSTRIES, SCHOOL ZONE, FINE FISSURED. ITEM No. 1810
SIZE: 2'x2'X3/4" ANGLED TEGULAR EDGE. COLOR: WHITE. NRC: 70

(ACT 2) ACOUSTICAL CEILING TILE
USG SHEETROOCK CLIMAPLUS, SMOOTH TEXTURED VINYL. ITEM No. 3260
SIZE: 2'x2'x5/8" SQUARE EDGE. COLOR

(SP) SOFFIT PANELS
AS SPECIFIED.

(PTI) INTERIOR WALL PAINT
AS SPECIFIED. AS SELECTED BY ARCHITECT.

(PTE) EXTERIOR WALL PAINT
AS SPECIFIED. AS SELECTED BY ARCHITECT.

METAL DOOR AND FRAME PAINT
AS SPECIFIED. AS SELECTED BY ARCHITECT.

STATE OF ALABAMA
CLAYTON M. WILKS
7609
03/17/22
REGISTERED ARCHITECT

POLY

Revision	REVISION DESCRIPTION	Date
		00-00-0000

DESIGNED BY: CMW
DRAWN BY: CMW
DATE: MARCH 2022
ENG/ARCH/SURVEYOR OF RECORD: CLAYTON M. WILKS
REGISTRATION No. 7609
Cert. of Auth. No. AL JA-C0155 FL 00118 GA 00118
ARCHITECT CA-5480 CA-1E
ENGINEER CA-1E
SURVEYOR

These drawings are copyrighted and the property of Poly-Inc. Any use, partial or full reproduction is prohibited except by written Agreement with Poly-Inc.

POLY, INC.
1935 Headland Avenue,
Dothan, AL 36303
334-793-4700
102 Sunset Lane 2135 University Blvd. Ste. A,
Shalimar, FL 32579 Tuscaloosa, AL 35401
850-609-1100 205-752-4037
WWW.POLY-INC.COM

COTTONWOOD HIGH SCHOOL FIELD HOUSE FOR HOUSTON COUNTY BOARD OF EDUCATION

FINISH SCHEDULE

SHEET No.
A-620

PROJECT No.
26394.02

BID DOCUMENTS

4/26/2022 3:15:38 PM

FINISH SCHEDULE

G:\CLEANSTUFF-15-28\26394 Houston BOE Open End Projects\26394.02 - Cottonwood Fieldhouse\03 - Final Design\ARCHITECTURE\CHS Fieldhouse.rvt

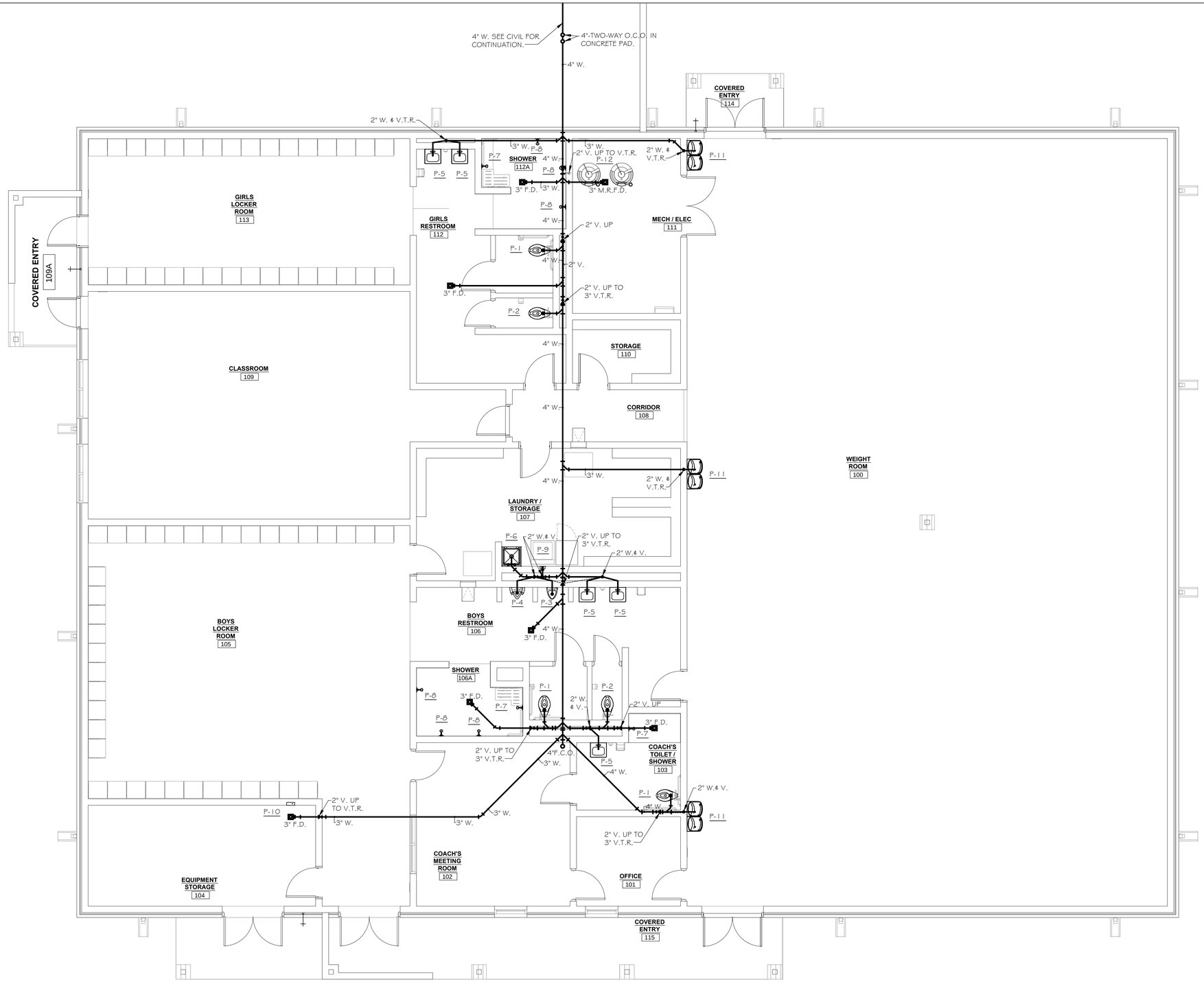

FLOOR PLAN - PLUMBING - WASTE & VENT PIPING

SCALE 3/16" = 1'-0"

0 2' 4' 8' 12'
SCALE: 3/16"=1'-0"

BID DOCUMENTS

ALABAMA LICENSED NO. 14807 PROFESSIONAL ENGINEER SHERRI

04/18/2022

POLY

Revision	REVISION DESCRIPTION	Description	Date
			00-00-0000

DESIGNED BY: WHS
DRAWN BY: DSD
DATE: APRIL, 2022
ENG/ARCH/SURVEYOR OF RECORD: CLAYTON M. WILKS
REGISTRATION No. 7809
Cert. of Auth. No. AL FL GA
ARCHITECT DAA380 AA-C001551 001118
ENGINEER CA-794-E CA-1918 001118
SURVEYOR

These drawings are copyrighted and the property of Poly-Inc. Any use, in whole or in part, reproduction is prohibited except by written agreement with Poly-Inc.

POLY, INC.
1935 Headland Avenue, Dothan, AL 36303
334-793-4700
102 Sunset Lane Shallmar, FL 32579 850-609-1100
2135 University Blvd. Ste. A Tuscaloosa, AL 35401 205-752-4037
WWW.POLY-INC.COM

COTTONWOOD HIGH SCHOOL FIELD HOUSE FOR HOUSTON COUNTY BOARD OF EDUCATION

FLOOR PLAN - PLUMBING - WASTE & VENT PIPING

SHEET No.
P-100

PROJECT No.
26394.02

1/11/2022 1:32:01 PM

FLOOR PLAN

G:\CLEAN\STUFF-15-28\26394 Houston BOE Open End Projects\26394.02 - Cottonwood Fieldhouse\03 - Final Design\ARCHITECTURE\CHS Fieldhouse.rvt

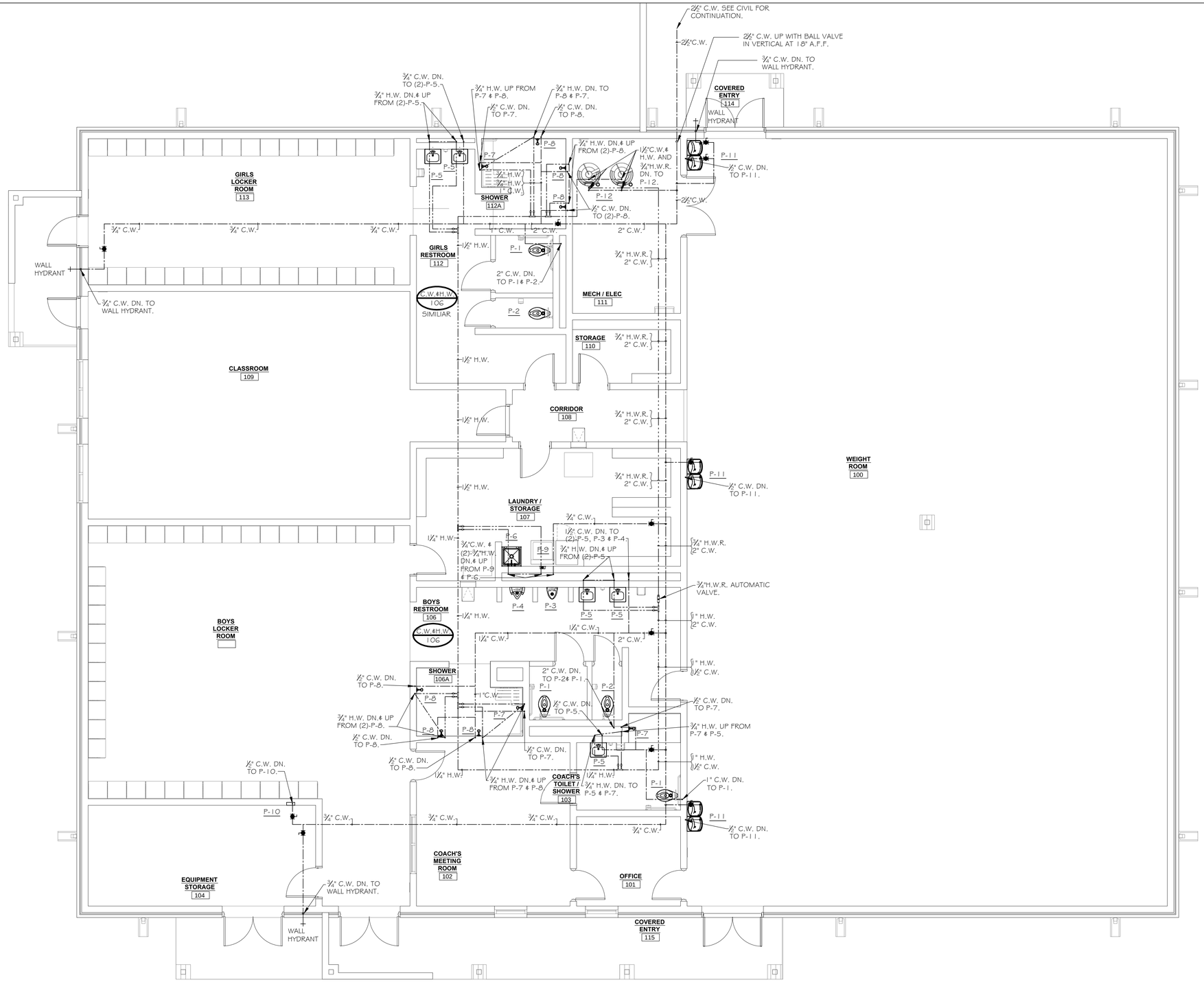

FLOOR PLAN - PLUMBING - COLD & HOT WATER PIPING

SCALE 3/16" = 1'-0"

0 2' 4' 8' 12'
SCALE: 3/16"=1'-0"

ALABAMA LICENSED NO. 14807 PROFESSIONAL ENGINEER SHERRI
04/18/2022

Revision	REVISION DESCRIPTION	Description	Date
			00-00-0000

DESIGNED BY: WHS
DRAWN BY: DSD
DATE: APRIL 2022
ENG/ARCH/SURVEYOR OF RECORD: CLAYTON M. WILKS
REGISTRATION No. 7609
Cert. of Auth. No.
FL GA
ARCHITECT AA-C001555 001118
ENGINEER CA-7816 001118
SURVEYOR

POLY, INC.
1935 Headland Avenue, Dothan, AL 36303
334-793-4700
102 Sunset Lane Shalimar, FL 32579 850-609-1100
2135 University Blvd, Ste. A Tuscaloosa, AL 35401 205-752-4037
WWW.POLY-INC.COM

These drawings are the property of Poly-Inc. Any reuse or copy of, or reproduction is prohibited except by written agreement with Poly-Inc.

COTTONWOOD HIGH SCHOOL FIELD HOUSE FOR HOUSTON COUNTY BOARD OF EDUCATION

FLOOR PLAN - PLUMBING COLD & HOT WATER PIPING

SHEET No.
P-200

PROJECT No.
26394.02

BID DOCUMENTS

1/11/2022 1:32:01 PM
FLOOR PLAN
G:\CLEANSTUFF-15-28\26394 Houston BOE Open End Projects\26394.02 - Cottonwood Fieldhouse\03 - Final Design\ARCHITECTURE\CHS Fieldhouse.rvt

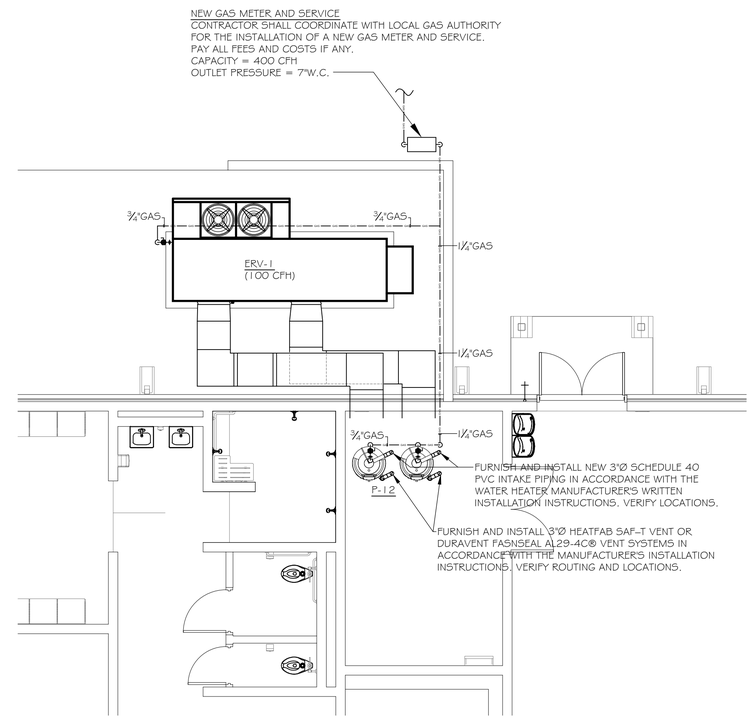

PARTIAL FLOOR PLAN - PLUMBING - GAS PIPING

SCALE 3/16" = 1'-0"

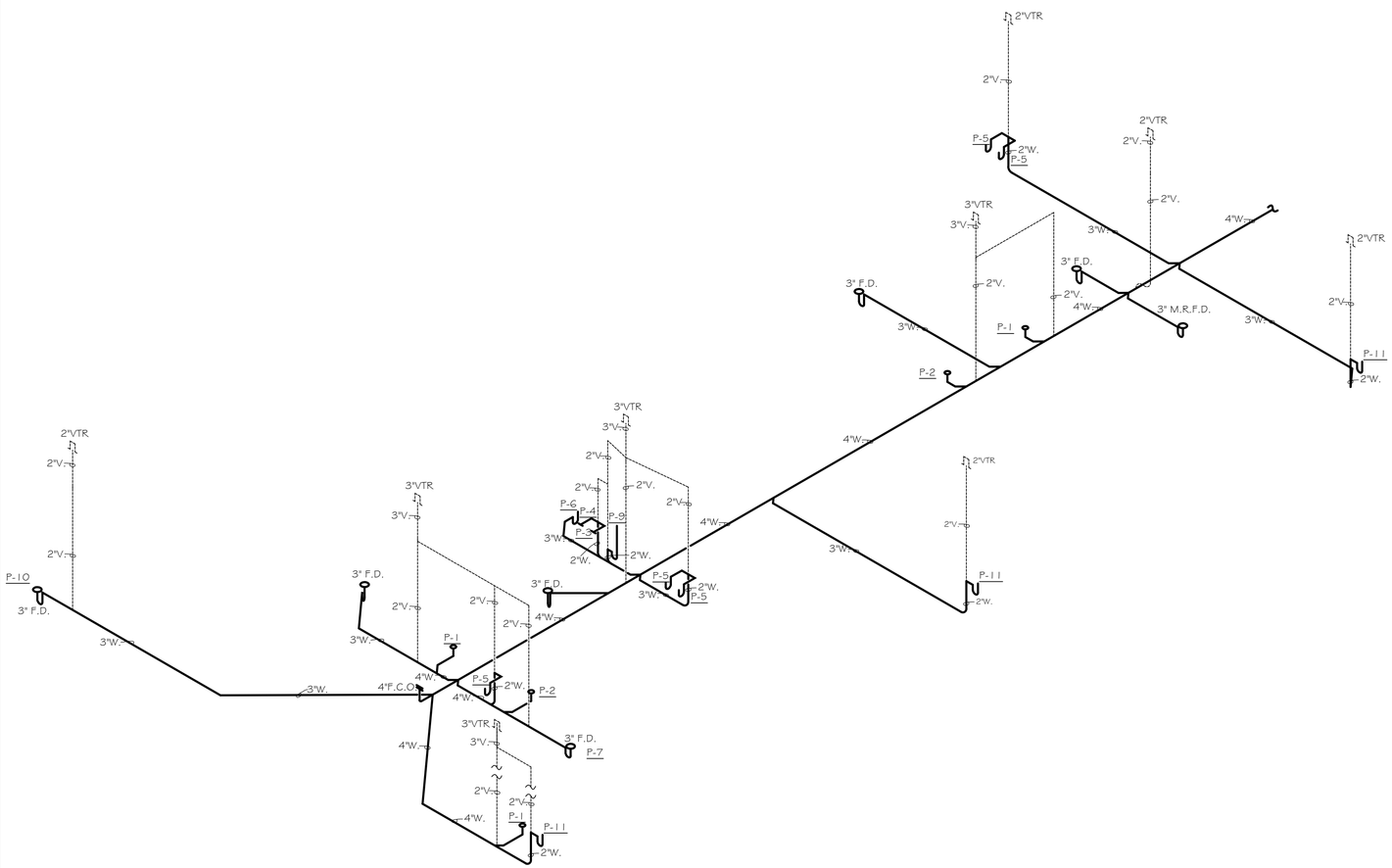

WASTE AND VENT RISER DIAGRAM

N.T.S.

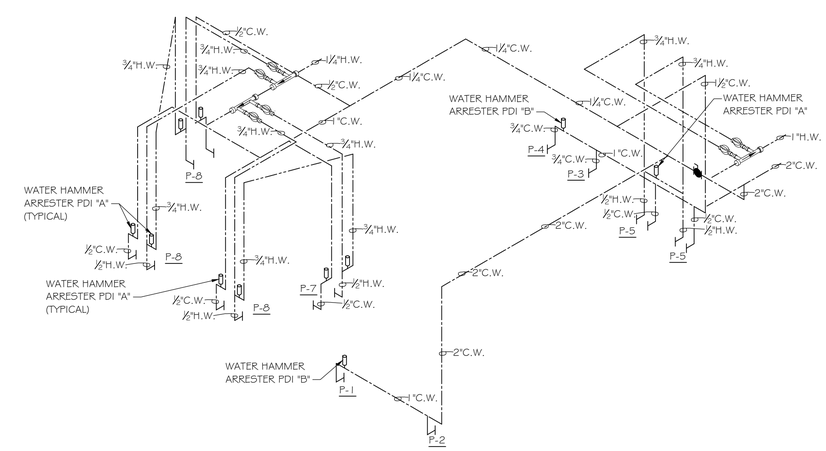

C.W.&H.W.
106

WATER RISER DIAGRAM

N.T.S.

0 2' 4' 8' 12'
SCALE: 3/16"=1'-0"

ALABAMA LICENSED NO. 14807 PROFESSIONAL ENGINEER SHERRI

04/18/2022

Revision	REVISION DESCRIPTION	Description	Date
			00-00-0000

DESIGNED BY: WHS
DRAWN BY: DSD
DATE: APRIL 2022
ENGARCHSURVEYOR OF RECORD: CLAYTON N. WILKS
REGISTRATION No. 7609

	Cert. of Auth. No.		
ARCHITECT	GA-0160	FL	GA
ENGINEER	GA-7845	AA-C001553	001118
SURVEYOR		GA-1818	001118

These drawings are copyrighted and the property of Poly-Inc. Any reproduction or use without reproduction is prohibited except by written agreement with Poly-Inc.

POLY, INC.
1935 Headland Avenue.
Dothan, AL 36303
334-793-4700
102 Sunset Lane 2135 University Blvd, Ste. A
Shalimar, FL 32579 Tuscaloosa, AL 35401
850-609-1100 205-752-4037
WWW.POLY-INC.COM

COTTONWOOD HIGH SCHOOL FIELD HOUSE FOR HOUSTON COUNTY BOARD OF EDUCATION

RISER DIAGRAMS

SHEET No.
P-300
PROJECT No.
26394.02

BID DOCUMENTS

PLUMBING FIXTURE SCHEDULE

No.	FIXTURE TYPE	WASTE	C.W.	H.W.	MOUNTING HEIGHT
P-1	HANDICAPPED WATER CLOSET	4"	1"	---	FLOOR
P-2	WATER CLOSET	4"	1"	---	FLOOR
P-3	HANDICAPPED URINAL	2"	3/4"	---	17" TO LIP
P-4	URINAL	2"	3/4"	---	24" TO LIP
P-5	HANDICAPPED LAVATORY	1 1/4"	1/2"	1/2"	34" TO RIM
P-6	MOP BASIN	3"	1/2"	1/2"	FLOOR
P-7	HANDICAPPED SHOWER	3"	1/2"	1/2"	SEE ARCHITECTURAL PLANS
P-8	SHOWER	3"	1/2"	1/2"	SEE ARCHITECTURAL PLANS
P-9	WASHING MACHINE CONNECTIONS BOX	2"	1/2"	1/2"	42" TO BOX
P-10	ICE MACHINE CONNECTION BOX	---	1/2"	---	18" A.F.F.
P-11	BI-LEVEL ELECTRIC WATER COOLER	1 1/4"	1/2"	---	31 5/8" TO ADA UNIT RIM.
P-12	GAS-FIRED WATER HEATERS	SEE PLANS			MOUNT ON 4" HIGH CONCRETE HOUSEKEEPING PAD

PLUMBING LEGEND

WASTE PIPING (W.)

VENT PIPING (V.)

COLD WATER PIPING (C.W.)

HOT WATER PIPING (H.W.) (140°F)

HOT WATER RETURN PIPING (H.W.R.)

H.W. FLOW SPLITTER W/BALL VALVES

GAS PIPING (G.)

BALL VALVE

GATE VALVE

H.W.R. AUTOMATIC VALVE

CHECK VALVE

UNION

VENT THRU ROOF — VTR

CLEANOUT — C.O.

FLOOR DRAIN — F.D.

MECHANICAL ROOM FLOOR DRAIN — M.R.F.D.

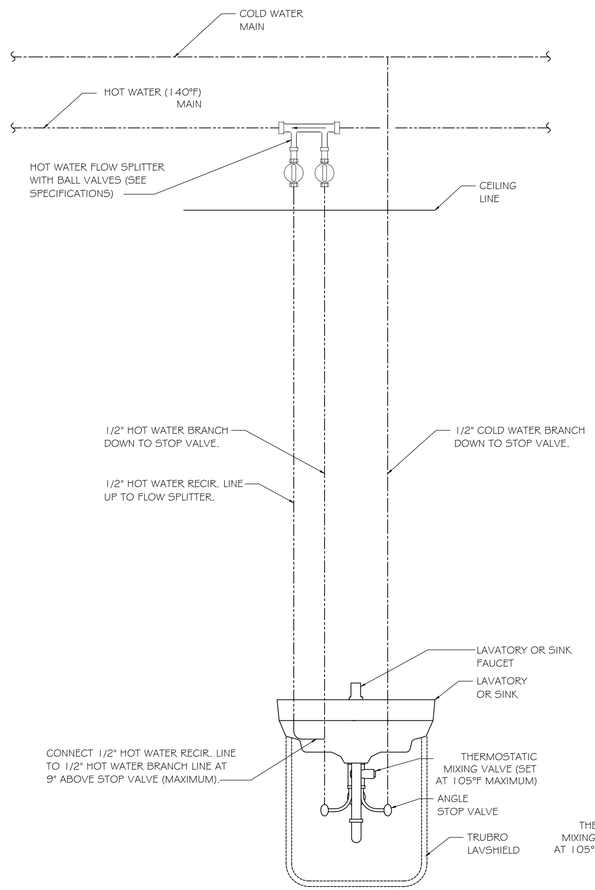

DETAIL - PIPING DIAGRAM FOR HOT WATER FLOW SPLITTER

N.T.S.

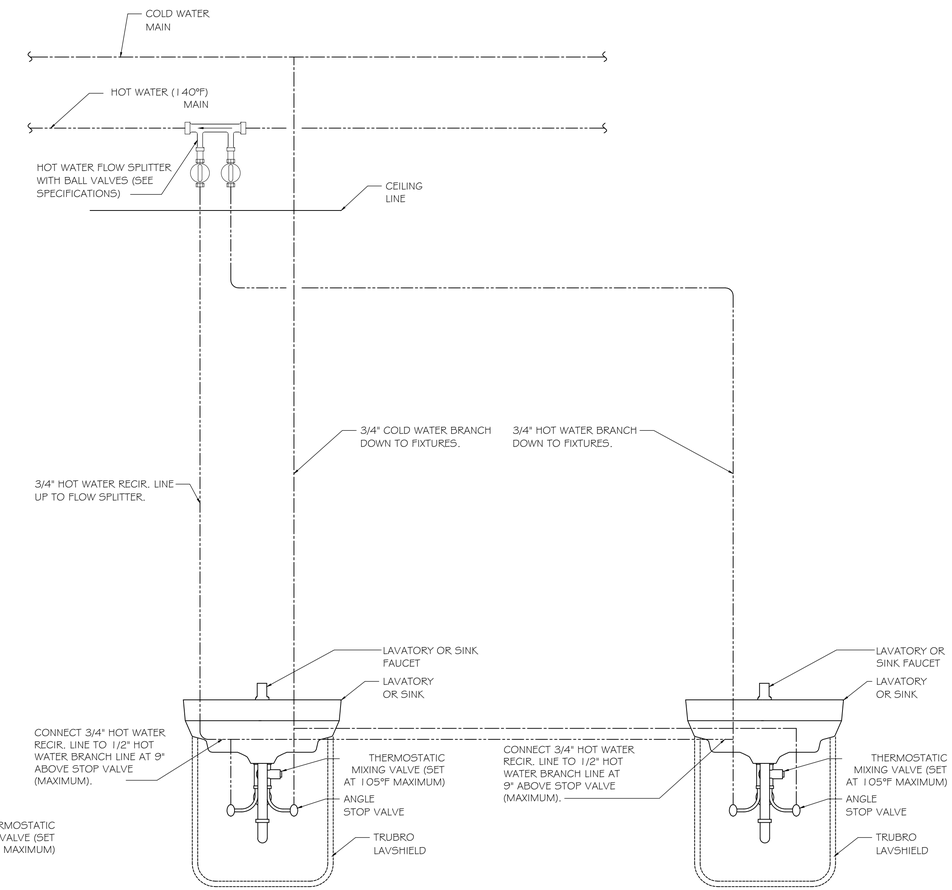

DETAIL - PIPING DIAGRAM FOR HOT WATER FLOW SPLITTER SERVING MULTIPLE FIXTURES

N.T.S.

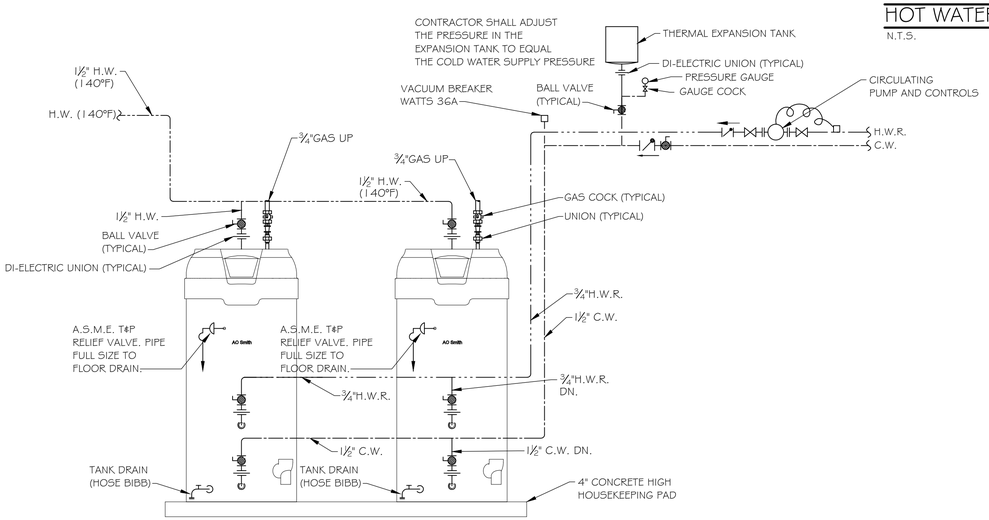

DETAIL - P-12 GAS-FIRED WATER HEATERS

N.T.S.

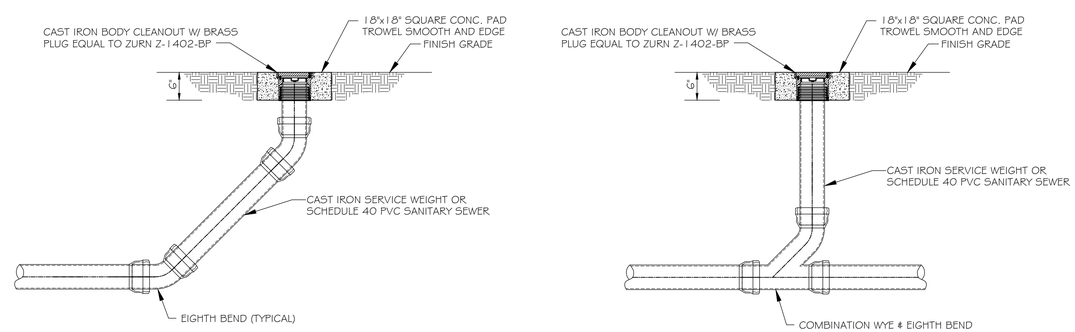

OUTSIDE CLEANOUT DETAILS

N.T.S.

ALABAMA LICENSED NO. 14807 PROFESSIONAL ENGINEER SHERRI

04/18/2022

Revision	REVISION DESCRIPTION	Description	Date
			00-00-0000

DESIGNED BY: WHS
DRAWN BY: DSD
DATE: APRIL, 2022
ENG/ARCH/SURVEYOR OF RECORD: CLAYTON M. WILKS
REGISTRATION No. 7689
Cert. of Auth. No. ARCHITECT EA-0480 FL, ENGINEER EA-7848 GA, SURVEYOR LC4-1818 GA
These drawings are the property of Poly-Inc. Any reproduction or use without written permission is prohibited except by written agreement with Poly-Inc.

POLY, INC.
1935 Headland Avenue, Montgomery, AL 36116
334-793-4700
102 Sunset Lane, Shalimar, FL 32579, 850-609-1100
2135 University Blvd, Ste. A, Tuscaloosa, AL 35401, 205-752-4037
WWW.POLY-INC.COM

COTTONWOOD HIGH SCHOOL FIELD HOUSE FOR HOUSTON COUNTY BOARD OF EDUCATION

SCHEDULE & DETAILS

SHEET No. P-400

PROJECT No. 26394.02

BID DOCUMENTS

1/11/2022 1:32:01 PM
FLOOR PLAN
G:\CLEANST\UFF-15-2826394 Houston BOE Open End Projects\26394.02 - Cottonwood Fieldhouse\03 - Final Design\ARCHITECTURE\CHS Fieldhouse.rvt

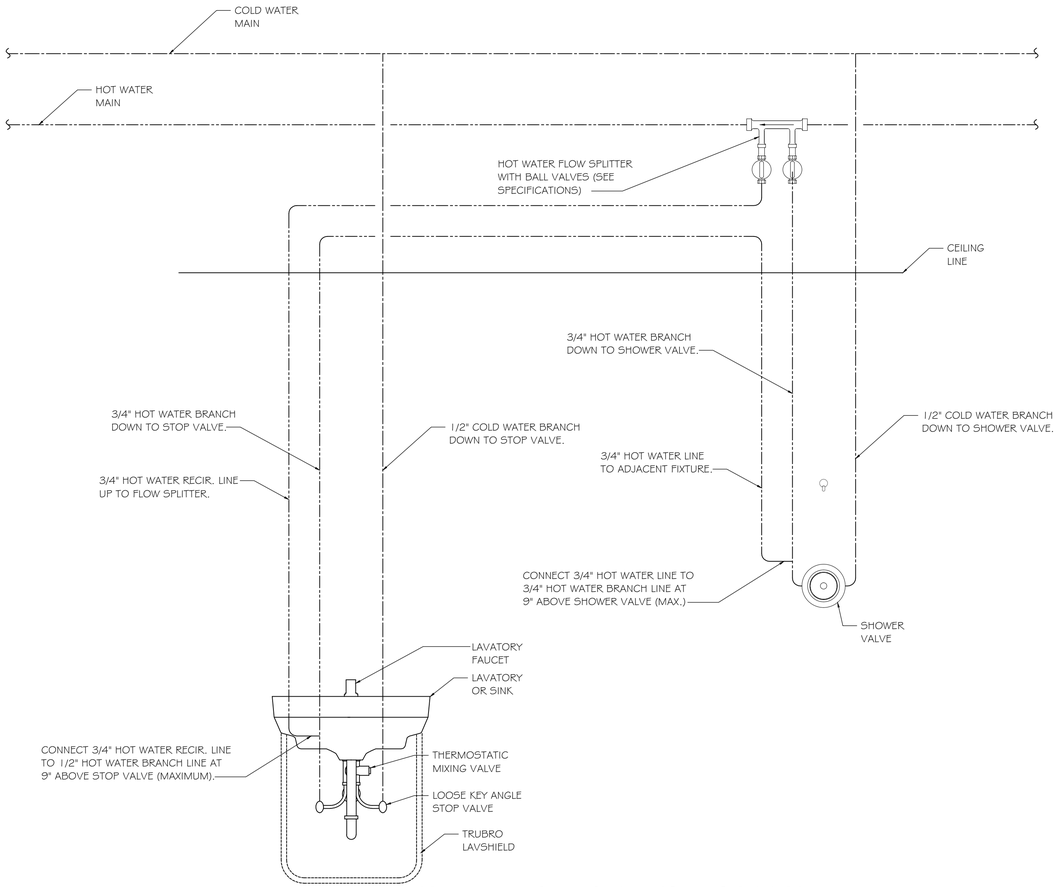

DETAIL - PIPING DIAGRAM FOR HOT WATER FLOW SPLITTER FOR MULTIPLE FIXTURES

N.T.S.

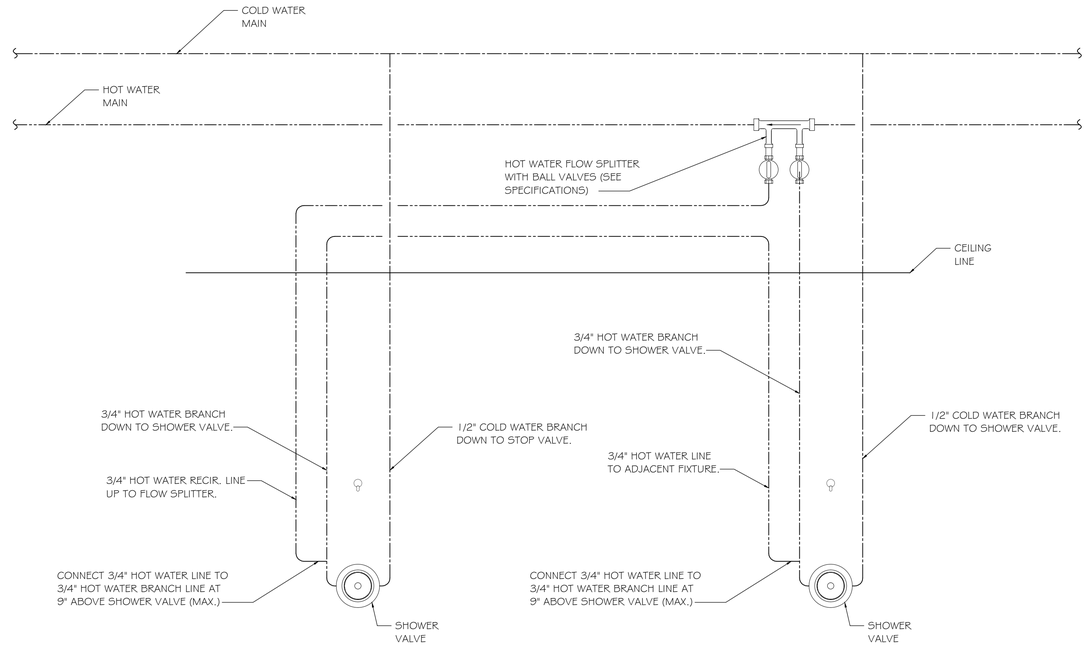

DETAIL - PIPING DIAGRAM FOR HOT WATER FLOW SPLITTER FOR MULTIPLE FIXTURES

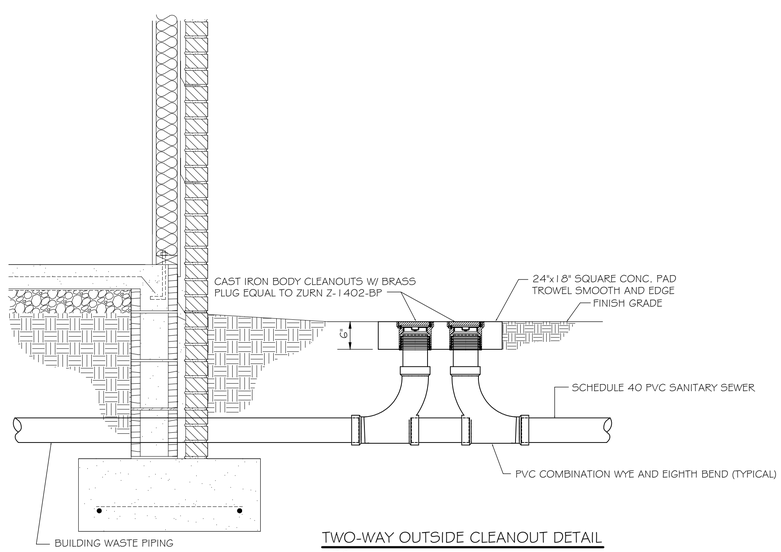

TWO-WAY OUTSIDE CLEANOUT DETAIL

N.T.S.

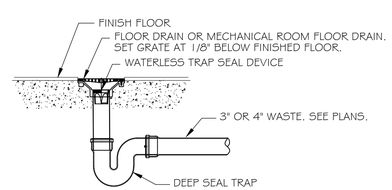

DETAIL - FLOOR DRAIN OR MECHANICAL ROOM FLOOR DRAIN WITH WATERLESS TRAP SEAL

N.T.S.

ALABAMA LICENSED NO. 14807 PROFESSIONAL ENGINEER SHERRI

04/18/2022

Revision	REVISION DESCRIPTION	Description	Date
			00-00-0000

DESIGNED BY: WHS
DRAWN BY: DSD
DATE: APRIL, 2022
ENG/ARCH/SURVEYOR OF RECORD: CLAYTON M. WILKS
REGISTRATION No. 7809
Cert. of Auth. No. ARCHITECT: AA-C001551 FL, ENGINEER: EA-7842-E GA, SURVEYOR: LA-3918
001118 001118 001118
These drawings are copyrighted and the property of Poly-Inc. Any reuse or copy of, or reproduction is prohibited except by written agreement with Poly-Inc.

POLY, INC.
1935 Headland Avenue, Dothan, AL 36303
334-793-4700
102 Sunset Lane Shallmar, FL 32579 850-609-1100
2135 University Blvd. Ste. A Tuscaloosa, AL 35401 205-752-4037
WWW.POLY-INC.COM

COTTONWOOD HIGH SCHOOL FIELD HOUSE FOR HOUSTON COUNTY BOARD OF EDUCATION

SCHEDULE & DETAILS

SHEET No.
P-500

PROJECT No.
26394.02

BID DOCUMENTS

1/11/2022 1:32:01 PM

FLOOR PLAN

G:\CLEANSTUFF-15-28\26394 Houston BOE Open End Projects\26394.02 - Cottonwood Fieldhouse\03 - Final Design\ARCHITECTURE\CHS Fieldhouse.rvt

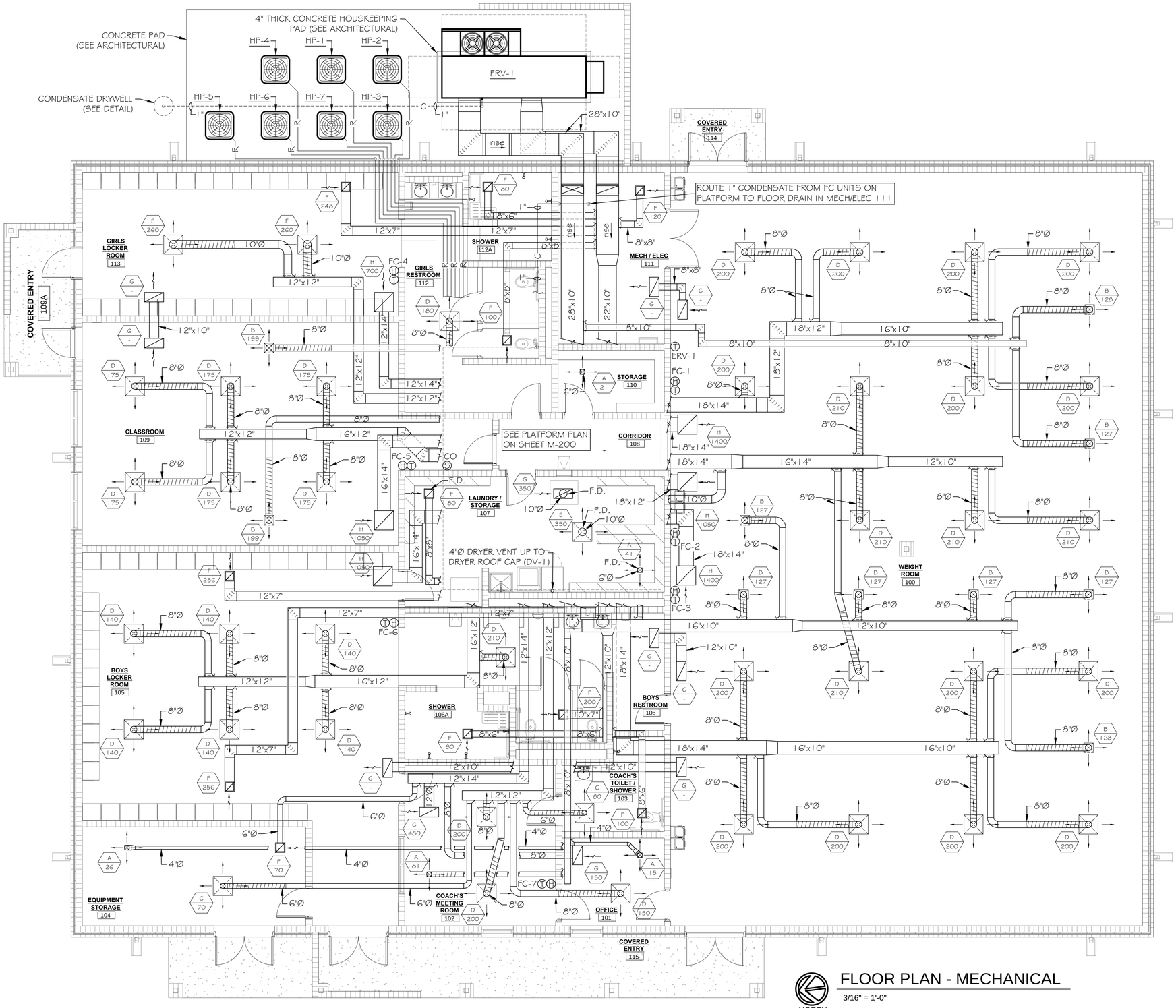

FLOOR PLAN - MECHANICAL

3/16" = 1'-0"

DRAWING NOTES:

1. (GENERAL) DRAWINGS ARE DIAGRAMMATIC IN NATURE AND MAY NOT REPRESENT EXACT CONDITIONS REQUIRED FOR INSTALLATION OF MECHANICAL DUCTWORK. MECHANICAL CONTRACTOR SHALL COORDINATE ALL DUCTWORK WITH STRUCTURAL FRAMING AS WELL AS OTHER TRADES PRIOR TO FABRICATION OR INSTALLATION OF DUCTWORK. FURNISH AND INSTALL ALL OFFSETS OR TRANSITIONS AS REQUIRED FOR COMPLETION OF WORK.
2. MECHANICAL CONTRACTOR SHALL COORDINATE LOCATION OF ALL INDOOR EQUIPMENT LOCATED ON MECHANICAL PLATFORM WITH ARCHITECTURAL PLANS TO MAINTAIN ADEQUATE SERVICE CLEARANCES.
3. MECHANICAL CONTRACTOR SHALL COORDINATE LOCATION OF ALL CEILING SUPPLY AND CEILING RETURN DIFFUSERS AND GRILLES WITH ARCHITECT'S REFLECTED CEILING PLAN.
4. MECHANICAL CONTRACTOR SHALL COORDINATE LOCATION OF ALL THERMOSTATS WITH OWNER PRIOR TO INSTALLATION.
5. MECHANICAL CONTRACTOR SHALL COORDINATE EXACT LOCATION OF OUTDOOR EQUIPMENT WITH ARCHITECTURAL PLANS TO MAINTAIN ADEQUATE SERVICE CLEARANCES.
6. MECHANICAL CONTRACTOR SHALL ROUTE ALL REFRIGERANT PIPING UP IN WALL FROM OUTDOOR SECTION TO INDOOR UNIT IN PROFESSIONAL MANNER. ALL REFRIGERANT PIPING THRU WALL SHALL BE SLEEVED. ALL REFRIGERANT PIPING SHALL BE SIZED PER EQUIPMENT MANUFACTURER'S RECOMMENDATIONS.
7. MECHANICAL CONTRACTOR SHALL ROUTE CONDENSATE PIPING FROM ERV-1 TO DRYWELL (SEE DETAIL).
8. MECHANICAL CONTRACTOR SHALL ROUTE CONDENSATE PIPING FROM FC UNITS ON MECHANICAL PLATFORM TO FLOOR DRAIN IN MECH/ELEC 111 PROVIDED BY PLUMBING CONTRACTOR.
9. MECHANICAL CONTRACTOR SHALL TERMINATE DRYER VENT IN ROOF CAP DV-1. DRYER VENT SHALL BE SMOOTH WALL GALVANIZED SHEET METAL. FIRE CAULK DRYER VENT PENETRATION AT HORIZONTAL RATING.

PEACH Engineering
1214 1st Avenue Suite 210
Columbus, GA 31902
(706) 596-1840
Fax: (706) 596-9233

BID DOCUMENTS

ALABAMA LICENSED NO. 14807 PROFESSIONAL ENGINEER SHERRI W. WILKS
04/18/2022

POLY

Revision	Description	Date
	REVISION DESCRIPTION	00-00-0000

DATE: APRIL, 2022
REGISTRATION No. 7609
These drawings are the property of Poly-Inc. Any reproduction or re-use without written agreement with Poly-Inc.

DESIGNED BY: WWS	DRAWN BY: DSD		
ENGR/ARCH/SURVEYOR OF RECORD: CLAYTON W. WILKS		FL.	GA.
Cert. of Auth. No.		AA-C001551	001118
ARCHITECT	CA-0160	AA-C001551	001118
ENGINEER	CA-7616	CA-1918	001118
SURVEYOR			

POLY, INC.
1695 Headland Avenue, Dothan, AL 36303
334-793-4700
102 Sunset Lane Shallmar, FL 32579 850-609-1100
2135 University Blvd. Ste. A Tuscaloosa, AL 35401 205-752-4037
WWW.POLY-INC.COM

COTTONWOOD HIGH SCHOOL FIELD HOUSE FOR HOUSTON COUNTY BOARD OF EDUCATION

FLOOR PLAN

SHEET No.
M-100

PROJECT No.
26394.02

1/11/2022 1:32:01 PM
FLOOR PLAN
G:\CLEANSTUFF-15-28\26394 Houston BOE Open End Projects\26394.02 - Cottonwood Fieldhouse\03 - Final Design\ARCHITECTURE\CHS Fieldhouse.rvt

ERU-1 PACKAGED ENERGY RECOVERY (100% OSA) VENTILATION AIR CALCULATIONS

SPACE NAME	OCCUPANCY CLASSIFICATION	FLOOR AREA SQ. FT. (Az)	OCCUPANT DENSITY #/1000 SQ. FT.	REQUIRED O.A. CFM/ SQ. FT. (Ra)	TIME AVERAGED OCCUPANCY (Pz)	REQUIRED O.A. CFM/PERSON (Rp)	AIR DISTRIBUTION EFFECTIVENESS (Ez)	BREATHING ZONE O.A. [RpPz + RaAz] = (Vbz)	SPACE O.A. CFM [Vbz / Ez] = (Voz)	SCHEDULED OUTDOOR AIR CFM	REQUIRED EXHAUST CFM/ SQ. FT.	REQUIRED EXHAUST CFM	SCHEDULED EXHAUST CFM
100 WEIGHT ROOM	SPORTS - WEIGHT ROOMS	3,874	10	0.06	39	20	1.0	1,012	1,012	1,012	-	-	-
101 COACHES OFFICE	OFFICES - OFFICE SPACES	98	5	0.06	1	5	1.0	11	11	15	-	-	-
102 COACHES MEETING	OFFICES - CONFERENCE ROOMS	264	50	0.06	13	5	1.0	81	81	81	-	-	-
103 COACHES TOILET	PUBLIC SPACES - TOILET ROOMS	90	-	-	-	-	-	-	-	-	50/FIXTURE	100	100
104 EQUIPMENT STORAGE	STORAGE ROOMS	214	-	0.12	-	-	1.0	26	26	26	-	-	-
105 BOYS LOCKER ROOM	EDUCATION - SPORTS LOCKER ROOMS	1,023	-	-	-	-	-	-	-	-	0.50	512	512
106 BOYS RESTROOM	PUBLIC SPACES - TOILET ROOMS	306	-	-	-	-	-	-	-	-	50/FIXTURE	200	200
106A BOYS SHOWER	PUBLIC SPACES - TOILET ROOMS	72	-	-	-	-	-	-	-	-	20/FIXTURE	80	80
107 LAUNDRY/STORAGE	STORAGE ROOMS	340	-	0.12	-	-	1.0	41	41	41	-	-	80
108 CORRIDOR	PUBLIC SPACES - CORRIDOR	96	-	0.06	-	-	1.0	6	6	6	-	-	-
109 CLASSROOM	EDUCATION - CLASSROOMS (AGE 9+)	822	35	0.12	30	10	1.0	398	398	398	-	-	-
110 STORAGE	STORAGE ROOMS	72	-	0.12	-	-	1.0	9	9	21	-	-	-
111 MECH/ELEC	-	190	-	-	-	-	-	-	-	-	-	-	120
112 GIRLS RESTROOM	PUBLIC SPACES - TOILET ROOMS	282	-	-	-	-	-	-	-	-	50/FIXTURE	100	100
112A GIRLS SHOWER	PUBLIC SPACES - TOILET ROOMS	80	-	-	-	-	-	-	-	-	20/FIXTURE	80	80
113 GIRLS LOCKER ROOM	EDUCATION - SPORTS LOCKER ROOMS	495	-	-	-	-	-	-	-	-	0.50	248	248
VENTILATION SUMMARY		8,318			83				1,584	1,600		1,320	1,520

NOTES:
1. CALCULATIONS PER 2015 INTERNATIONAL MECHANICAL CODE TABLE 403.3.1.1
2. PER TABLE 403.1.1.1.2.f (Ez) = 1.0 FOR CEILING SUPPLY OF WARM ARE LESS THAN 15°F ABOVE SPACE TEMPERATURE.
3. PER 403.1.1.2.2 100% OSA SYSTEMS (Vot) = SUM(Voz)

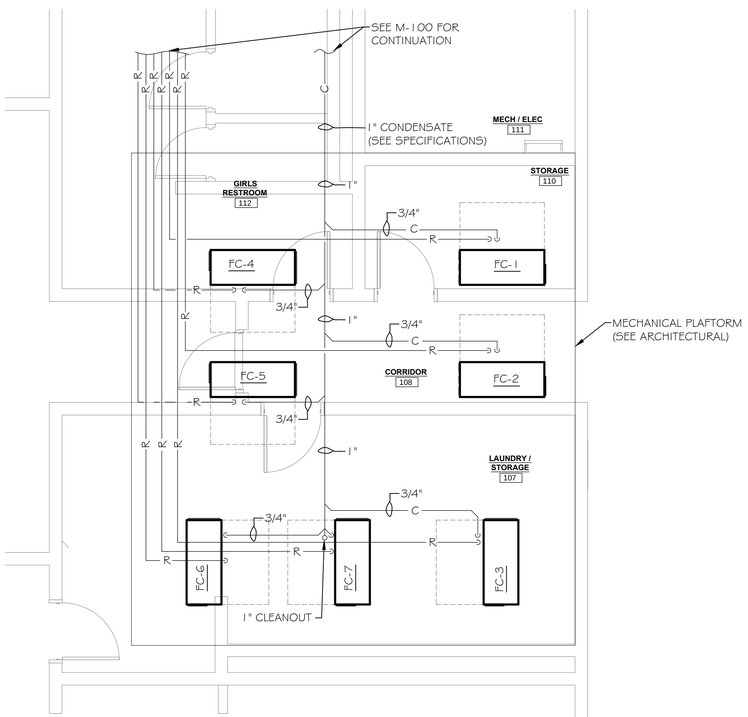

NORTH

1 / M-200 PARTIAL PLAN - MECHANICAL PIPING
1/4" = 1'-0"

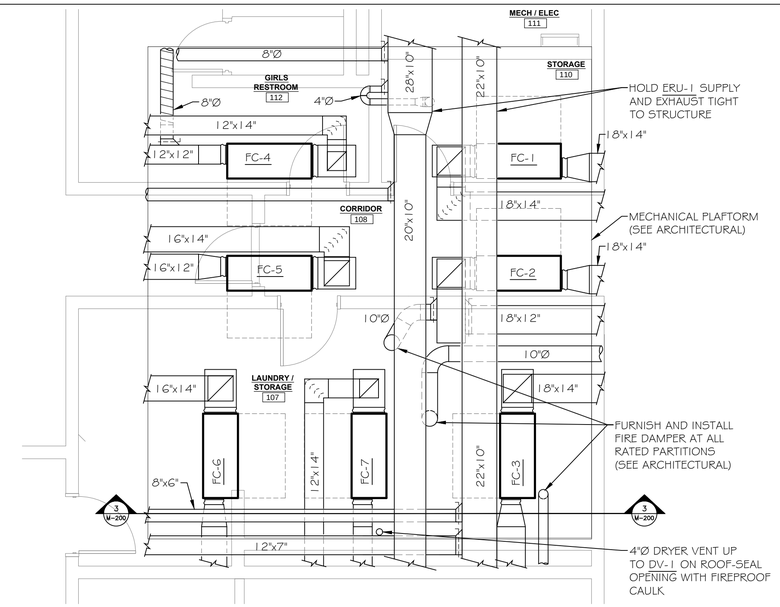

NORTH

2 / M-200 PARTIAL PLAN - MECHANICAL PLATFORM
1/4" = 1'-0"

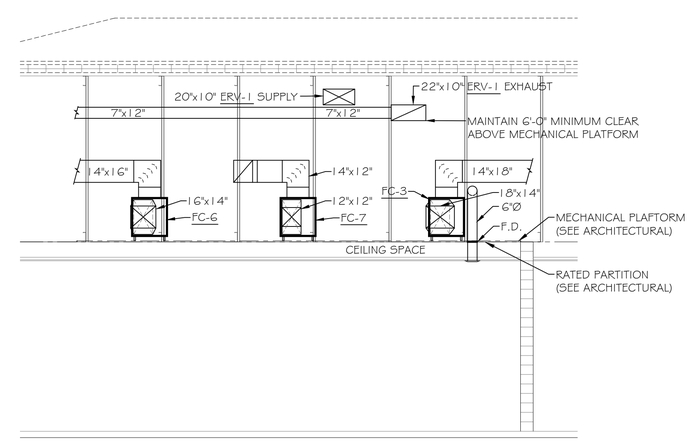

3 / M-200 MECHANICAL SECTION
1/4" = 1'-0"

PEACH Engineering
1214 1st Avenue Suite 210
Columbus, GA 31902
(706) 596-1840
Fax: (706) 596-9233

BID DOCUMENTS

ALABAMA LICENSED NO. 14807 PROFESSIONAL ENGINEER SHERRI
04/18/2022

POLY

Revision	REVISION DESCRIPTION	Description	Date
			00-00-0000

DESIGNED BY: WHS
DRAWN BY: DSD
DATE: APRIL, 2022
ENGARCHSURVEYOR OF RECORD: CLAYTON M. WILKAS
REGISTRATION No. 7609
Cert. of Auth. No. AL FL GA
ARCHITECT (AA/AIA) IAA/C001551 001118 001118
ENGINEER CA-7874-E CA-1818 001118
SURVEYOR

These drawings are copyrighted and the property of Poly-Inc. Any reproduction or re-use of these drawings without written agreement with Poly-Inc.

POLY, INC.
1935 Headland Avenue, Dothan, AL 36303
334-793-4700
102 Sunset Lane Shalimar, FL 32579 850-609-1100
2135 University Blvd. Ste. A Tuscaloosa, AL 35401 205-752-4037
WWW.POLY-INC.COM

COTTONWOOD HIGH SCHOOL FIELD HOUSE FOR HOUSTON COUNTY BOARD OF EDUCATION

SCHEDULES

SHEET No.
M-200

PROJECT No.
26394.02

1/11/2022 1:32:01 PM
FLOOR PLAN
G:\CLEANSTUFF-15-28\26394 Houston BOE Open End Projects\26394.02 - Cottonwood Fieldhouse\03 - Final Design\ARCHITECTURE\CHS Fieldhouse.rvt

1/11/2022 1:32:01 PM

ENERGY RECOVERY UNIT WITH NATURAL GAS HEATING & DX COOLING SCHEDULE

UNIT NO.	NET AIR QUANTITIES: SUPPLY AIR (CFM)	APPROX. EXT. S.P. IN. WG	EXHAUST AIR (CFM)	APPROX. EXT. S.P. IN. WG	OUTSIDE AIR (CFM)	ERU SUMMER PERFORMANCE: ROOM AIR DB (°F)	ROOM AIR WB (°F)	OUTSIDE AIR DB (°F)	OUTSIDE AIR WB (°F)	LEAVING AIR DB (°F)	LEAVING AIR WB (°F)	DX COOLING: MINIMUM TOTAL B.T.U.H.	MINIMUM SENSIBLE B.T.U.H.	MINIMUM ISMRE EFFICIENCY	ENT. AIR DB (°F)	ENT. AIR WB (°F)	LEAVING AIR DB (°F)	LEAVING AIR WB (°F)	HOT GAS REHEAT: MINIMUM TOTAL B.T.U.H.	LEAVING AIR DB (°F)	LEAVING AIR WB (°F)	ERU WINTER PERFORMANCE: ROOM AIR DB (°F)	ROOM AIR WB (°F)	OUTSIDE AIR DB (°F)	OUTSIDE AIR WB (°F)	LEAVING AIR DB (°F)	LEAVING AIR WB (°F)	NATURAL GAS HEATING: MINIMUM INPUT B.T.U.H.	ENT. AIR DB (°F)	LVG. AIR DB (°F)	ELECTRICAL DATA: SUPPLY FAN H.P.	EXHAUST FAN H.P.	WHEEL MOTOR AMPS	COMPRESSOR RUN LOAD AMPS	CONDENSER FAN AMPS	MIN. CIRCUIT AMPS	MAX. FUSE AMPS	VOLTS	PHASE	HZ	REMARKS
ERV-1	1,600	1.00	1,520	1.00	1,600	75.0	62.5	95.0	76.0	79.2	66.0	70,000	48,300	8.9	79.2	66.0	51.7	51.4	43,700	77.1	61.3	72.0	55.8	23.5	19.6	60.9	48.7	100,000	60.9	80.2	1 @ 1.5	1 @ 1.5	0.50	1 @ 14.1	2 @ 1.6 EACH	33.8	45	208	3	60	BASIS OF DESIGN: GREENHECK MODEL RVE-150-74-30L-40I-O ENERGY RECOVERY UNIT WITH MOTORIZED OUTDOOR AIR AND EXHAUST DAMPERS, SUPPLY AND EXHAUST FILTER RACK, TWO (2) SETS OF FARR 30/30 PLEATED FILTERS (MERV 8), DX COOLING, INDIRECT GAS HEATING, DISCONNECT SWITCH AND SINGLE POINT CONNECTION.

SPLIT SYSTEM HEAT PUMP SCHEDULE

INDOOR SECTION OF HEAT PUMP

UNIT NO.	UNIT FAN: TOTAL AIR CFM	TYPE UNIT	TYPE FAN	APPROX. EXT S.P. INCHES H_2O	FAN MOTOR H.P.	COOLING DATA: MAX COIL FACE VEL F.P.M.	MIN. CAPACITY TOTAL B.T.U.H.	MIN. CAPACITY SENSIBLE B.T.U.H.	ENT AIR F D.B.	ENT AIR F W.B.	MIN. S.E.E.R./ E.E.R.	REVERSE CYCLE HEATING: MINIMUM HEATING CAPACITY B.T.U.H.	ENT. TEMP. °F	AMB. TEMP. °F	MIN. C.O.P. (HSPF)	ELECTRIC HEATER DATA: MINIMUM HEATING CAPACITY B.T.U.H.	ENT. TEMP. °F	LVG. TEMP. °F	NUMBER OF STAGES	TOTAL K.W.	INDOOR SECTION POWER SUPPLY: MINIMUM CIRCUIT AMPS	MAXIMUM FUSE AMPS	VOLT	PHASE	HZ
FC-1	(HI) 1,400 (LOW) 1,120	HORIZ. D. T.	F.C.	0.50	3/4	500	(HI) 47,000 (LOW) 32,620	(HI) 34,350 (LOW) 24,570	80.0	67.0	16.0 S.E.E.R.	(HI) 47,810 (LOW) 33,670	65.0	47.0	3.68 (9.0)	23,208	65.0	80.3	3	6.8	49.5	50	208	1	60
FC-2	(HI) 1,400 (LOW) 1,120	HORIZ. D. T.	F.C.	0.50	3/4	500	(HI) 47,000 (LOW) 32,620	(HI) 34,350 (LOW) 24,570	80.0	67.0	16.0 S.E.E.R.	(HI) 47,810 (LOW) 33,670	65.0	47.0	3.68 (9.0)	23,208	65.0	80.3	3	6.8	49.5	50	208	1	60
FC-3	(HI) 1,400 (LOW) 1,120	HORIZ. D. T.	F.C.	0.50	3/4	500	(HI) 47,000 (LOW) 32,620	(HI) 34,350 (LOW) 24,570	80.0	67.0	16.0 S.E.E.R.	(HI) 47,810 (LOW) 33,670	65.0	47.0	3.68 (9.0)	23,208	65.0	80.3	3	6.8	49.5	50	208	1	60
FC-4	(HI) 700 (LOW) 560	HORIZ. D. T.	F.C.	0.50	1/2	500	(HI) 24,000 (LOW) 17,610	(HI) 17,090 (LOW) 12,900	80.0	67.0	17.0 S.E.E.R.	(HI) 25,500 (LOW) 18,360	65.0	47.0	3.90 (9.0)	23,208	65.0	95.6	3	6.8	49.5	50	208	1	60
FC-5	(HI) 1,050 (LOW) 840	HORIZ. D. T.	F.C.	0.50	3/4	500	(HI) 36,400 (LOW) 26,010	(HI) 26,320 (LOW) 19,340	80.0	67.0	17.0 S.E.E.R.	(HI) 36,370 (LOW) 25,640	65.0	47.0	4.06 (9.5)	23,208	65.0	85.5	3	6.8	49.5	50	208	1	60
FC-6	(HI) 1,050 (LOW) 840	HORIZ. D. T.	F.C.	0.50	3/4	500	(HI) 36,400 (LOW) 26,010	(HI) 26,320 (LOW) 19,340	80.0	67.0	17.0 S.E.E.R.	(HI) 36,370 (LOW) 25,640	65.0	47.0	4.06 (9.5)	23,208	65.0	85.5	3	6.8	49.5	50	208	1	60
FC-7	(HI) 700 (LOW) 560	HORIZ. D. T.	F.C.	0.50	1/2	500	(HI) 24,000 (LOW) 17,610	(HI) 17,090 (LOW) 12,900	80.0	67.0	17.0 S.E.E.R.	(HI) 25,500 (LOW) 18,360	65.0	47.0	3.90 (9.0)	23,208	65.0	95.6	3	6.8	49.5	50	208	1	60

OUTDOOR SECTION OF HEAT PUMP

UNIT NO.	COMPRESSOR: NO. OF COMPR	RLA AMPS	O.D. FANS: NO. OF FANS	FLA AMPS	POWER SUPPLY: MINIMUM CIRCUIT AMPS	MAXIMUM FUSE AMPS	VOLT	PHASE	HZ	REMARKS
HP-1	1	22.8	1	1.3	29.8	50	208	1	60	BASIS OF DESIGN: INDOOR SECTION CARRIER MODEL FV4CNB006 COMPLETE WITH HEAT PUMP COIL, ELECTRIC HEAT ACCESSORY (KFCEH2901N09), EXTERNAL VIBRATION ISOLATION, ACCESSORY SLIDE IN 2" FILTER RACK WITH 2" PLEATED FILTERS (MERV 8), AND SINGLE POINT CONNECTION. OUTDOOR SECTION CARRIER MODEL 28HCB648 (TWO STAGE UNIT) WITH LOW AMBIENT COOLING AND WIFI THERMOSTAT WITH HUMIDITY CONTROL.
HP-2	1	22.8	1	1.3	29.8	50	208	1	60	BASIS OF DESIGN: INDOOR SECTION CARRIER MODEL FV4CNB006 COMPLETE WITH HEAT PUMP COIL, ELECTRIC HEAT ACCESSORY (KFCEH2901N09), EXTERNAL VIBRATION ISOLATION, ACCESSORY SLIDE IN 2" FILTER RACK WITH 2" PLEATED FILTERS (MERV 8), AND SINGLE POINT CONNECTION. OUTDOOR SECTION CARRIER MODEL 28HCB648 (TWO STAGE UNIT) WITH LOW AMBIENT COOLING AND WIFI THERMOSTAT WITH HUMIDITY CONTROL.
HP-3	1	22.8	1	1.3	29.8	50	208	1	60	BASIS OF DESIGN: INDOOR SECTION CARRIER MODEL FV4CNB006 COMPLETE WITH HEAT PUMP COIL, ELECTRIC HEAT ACCESSORY (KFCEH2901N09), EXTERNAL VIBRATION ISOLATION, ACCESSORY SLIDE IN 2" FILTER RACK WITH 2" PLEATED FILTERS (MERV 8), AND SINGLE POINT CONNECTION. OUTDOOR SECTION CARRIER MODEL 28HCB648 (TWO STAGE UNIT) WITH LOW AMBIENT COOLING AND WIFI THERMOSTAT WITH HUMIDITY CONTROL.
HP-4	1	12.5	1	0.6	16.2	25	208	1	60	BASIS OF DESIGN: INDOOR SECTION CARRIER MODEL FV4CNF003 COMPLETE WITH HEAT PUMP COIL, ELECTRIC HEAT ACCESSORY (KFCEH2901N09), EXTERNAL VIBRATION ISOLATION, ACCESSORY SLIDE IN 2" FILTER RACK WITH 2" PLEATED FILTERS (MERV 8), AND SINGLE POINT CONNECTION. OUTDOOR SECTION CARRIER MODEL 25HCB624 (TWO STAGE UNIT) WITH LOW AMBIENT COOLING AND WIFI THERMOSTAT WITH HUMIDITY CONTROL.
HP-5	1	18.5	1	0.6	23.7	40	208	1	60	BASIS OF DESIGN: INDOOR SECTION CARRIER MODEL FV4CNB006 COMPLETE WITH HEAT PUMP COIL, ELECTRIC HEAT ACCESSORY (KFCEH2901N09), EXTERNAL VIBRATION ISOLATION, ACCESSORY SLIDE IN 2" FILTER RACK WITH 2" PLEATED FILTERS (MERV 8), AND SINGLE POINT CONNECTION. OUTDOOR SECTION CARRIER MODEL 28HCB636 (TWO STAGE UNIT) WITH LOW AMBIENT COOLING AND WIFI THERMOSTAT WITH HUMIDITY CONTROL.
HP-6	1	18.5	1	0.6	23.7	40	208	1	60	BASIS OF DESIGN: INDOOR SECTION CARRIER MODEL FV4CNB006 COMPLETE WITH HEAT PUMP COIL, ELECTRIC HEAT ACCESSORY (KFCEH2901N09), EXTERNAL VIBRATION ISOLATION, ACCESSORY SLIDE IN 2" FILTER RACK WITH 2" PLEATED FILTERS (MERV 8), AND SINGLE POINT CONNECTION. OUTDOOR SECTION CARRIER MODEL 28HCB636 (TWO STAGE UNIT) WITH LOW AMBIENT COOLING AND WIFI THERMOSTAT WITH HUMIDITY CONTROL.
HP-7	1	12.5	1	0.6	16.2	25	208	1	60	BASIS OF DESIGN: INDOOR SECTION CARRIER MODEL FV4CNF003 COMPLETE WITH HEAT PUMP COIL, ELECTRIC HEAT ACCESSORY (KFCEH2901N09), EXTERNAL VIBRATION ISOLATION, ACCESSORY SLIDE IN 2" FILTER RACK WITH 2" PLEATED FILTERS (MERV 8), AND SINGLE POINT CONNECTION. OUTDOOR SECTION CARRIER MODEL 25HCB624 (TWO STAGE UNIT) WITH LOW AMBIENT COOLING AND WIFI THERMOSTAT WITH HUMIDITY CONTROL.

SCHEDULE NOTES:

1. REFRIGERANT PIPING SIZES TO BE PROVIDED BY EQUIPMENT MANUFACTURER'S REPRESENTATIVE.

AIR PURIFICATION DEVICE SCHEDULE

UNIT NO.	SUPPLY AIR CFM	TOTAL REQUIRED	ΔP INCHES H_2O	MOUNTING LOCATION	CONTROL INTERLOCK	VOLTS	WATTS	REMARKS
FC-1	1,400	1	0.03	SUPPLY FAN INLET	WITH SUPPLY FAN BY HVAC CONTRACTOR	24V AC	60	BASIS OF DESIGN: GLOBAL PLASMA SOLUTIONS MODEL GPS-FC24-AC COMPACT SELF-CLEANING BI-POLAR IONIZATION SYSTEM COMPLETE WITH ALL COMPOSITE AND CARBON FIBER CONSTRUCTION, ILLUMINATED ON/OFF SWITCH, ALARM OUTPUT DRY-CONTACTS, AND MAINTENANCE FREE DESIGN. OTHER MANUFACTURER'S WHO MAY BE CONSIDERED ARE AIRGENICS AND BIOXGEN.
FC-2	1,400	1	0.03	SUPPLY FAN INLET	WITH SUPPLY FAN BY HVAC CONTRACTOR	24V AC	60	BASIS OF DESIGN: GLOBAL PLASMA SOLUTIONS MODEL GPS-FC24-AC COMPACT SELF-CLEANING BI-POLAR IONIZATION SYSTEM COMPLETE WITH ALL COMPOSITE AND CARBON FIBER CONSTRUCTION, ILLUMINATED ON/OFF SWITCH, ALARM OUTPUT DRY-CONTACTS, AND MAINTENANCE FREE DESIGN. OTHER MANUFACTURER'S WHO MAY BE CONSIDERED ARE AIRGENICS AND BIOXGEN.
FC-3	1,400	1	0.03	SUPPLY FAN INLET	WITH SUPPLY FAN BY HVAC CONTRACTOR	24V AC	60	BASIS OF DESIGN: GLOBAL PLASMA SOLUTIONS MODEL GPS-FC24-AC COMPACT SELF-CLEANING BI-POLAR IONIZATION SYSTEM COMPLETE WITH ALL COMPOSITE AND CARBON FIBER CONSTRUCTION, ILLUMINATED ON/OFF SWITCH, ALARM OUTPUT DRY-CONTACTS, AND MAINTENANCE FREE DESIGN. OTHER MANUFACTURER'S WHO MAY BE CONSIDERED ARE AIRGENICS AND BIOXGEN.
FC-4	700	1	0.03	SUPPLY FAN INLET	WITH SUPPLY FAN BY HVAC CONTRACTOR	24V AC	60	BASIS OF DESIGN: GLOBAL PLASMA SOLUTIONS MODEL GPS-FC24-AC COMPACT SELF-CLEANING BI-POLAR IONIZATION SYSTEM COMPLETE WITH ALL COMPOSITE AND CARBON FIBER CONSTRUCTION, ILLUMINATED ON/OFF SWITCH, ALARM OUTPUT DRY-CONTACTS, AND MAINTENANCE FREE DESIGN. OTHER MANUFACTURER'S WHO MAY BE CONSIDERED ARE AIRGENICS AND BIOXGEN.
FC-5	1,050	1	0.03	SUPPLY FAN INLET	WITH SUPPLY FAN BY HVAC CONTRACTOR	24V AC	60	BASIS OF DESIGN: GLOBAL PLASMA SOLUTIONS MODEL GPS-FC24-AC COMPACT SELF-CLEANING BI-POLAR IONIZATION SYSTEM COMPLETE WITH ALL COMPOSITE AND CARBON FIBER CONSTRUCTION, ILLUMINATED ON/OFF SWITCH, ALARM OUTPUT DRY-CONTACTS, AND MAINTENANCE FREE DESIGN. OTHER MANUFACTURER'S WHO MAY BE CONSIDERED ARE AIRGENICS AND BIOXGEN.
FC-6	1,050	1	0.03	SUPPLY FAN INLET	WITH SUPPLY FAN BY HVAC CONTRACTOR	24V AC	60	BASIS OF DESIGN: GLOBAL PLASMA SOLUTIONS MODEL GPS-FC24-AC COMPACT SELF-CLEANING BI-POLAR IONIZATION SYSTEM COMPLETE WITH ALL COMPOSITE AND CARBON FIBER CONSTRUCTION, ILLUMINATED ON/OFF SWITCH, ALARM OUTPUT DRY-CONTACTS, AND MAINTENANCE FREE DESIGN. OTHER MANUFACTURER'S WHO MAY BE CONSIDERED ARE AIRGENICS AND BIOXGEN.
FC-7	700	1	0.03	SUPPLY FAN INLET	WITH SUPPLY FAN BY HVAC CONTRACTOR	24V AC	60	BASIS OF DESIGN: GLOBAL PLASMA SOLUTIONS MODEL GPS-FC24-AC COMPACT SELF-CLEANING BI-POLAR IONIZATION SYSTEM COMPLETE WITH ALL COMPOSITE AND CARBON FIBER CONSTRUCTION, ILLUMINATED ON/OFF SWITCH, ALARM OUTPUT DRY-CONTACTS, AND MAINTENANCE FREE DESIGN. OTHER MANUFACTURER'S WHO MAY BE CONSIDERED ARE AIRGENICS AND BIOXGEN.

SCHEDULE NOTES:

1. AIR PURIFICATION DEVICE SHALL NOT OPERATE WHEN FAN IS OFF.

DRYER VENT SCHEDULE

UNIT NO.	TOTAL AIR CFM	APPROX. EXT. S.P. INCH WATER	DESCRIPTION	SIZE INCHES	ROOF CURB/ FLASHING FLANGE	REMARKS
DV-1	230	0.03	ROOF MOUNTED DRYER EXHAUST	4.0	FLASHING FLANGE	BASIS OF DESIGN: ALDES MODEL 22043 AL ALUMINUM LOW PROFILE HIGH PERFORMANCE DRYER ROOF CAP WITH FLASHING FLANGE, REMOVABLE BIRDSCREEN, BACKDRAFT/WEATHER DAMPER AND 4"Ø DUCT COLLAR.

AIR DEVICE SCHEDULE

SYMBOL	CFM RANGE	NECK SIZE INCHES	FACE SIZE INCHES	MAX. NC RATING	REMARKS
A CFM	0-111	6"Ø	9x9	20	BASIS OF DESIGN: TITUS MCD SQUARE MODULAR CORE CEILING DIFFUSER COMPLETE WITH ONE PIECE STAMPED STEEL CONSTRUCTION, ADJUSTABLE CORE CAPABLE OF ONE, TWO, THREE OR FOUR WAY THROW, STANDARD WHITE FINISH, BORDER TYPE 6 (BEVELED-SURFACE MOUNT) AND OPTIONAL AG-40 OPPOSED BLADE DAMPER.
B CFM	110-225	8"Ø	11x11	20	BASIS OF DESIGN: TITUS MCD SQUARE MODULAR CORE CEILING DIFFUSER COMPLETE WITH ONE PIECE STAMPED STEEL CONSTRUCTION, ADJUSTABLE CORE CAPABLE OF ONE, TWO, THREE OR FOUR WAY THROW, STANDARD WHITE FINISH, BORDER TYPE 6 (BEVELED-SURFACE MOUNT) AND OPTIONAL AG-40 OPPOSED BLADE DAMPER.
C CFM	0-140	6"Ø	24x24	20	BASIS OF DESIGN: TITUS OMNI-AA ALUMINUM FULL FACE ARCHITECTURAL SQUARE PANEL CEILING DIFFUSER COMPLETE WITH BORDER TYPE 3 (LAY-IN) FRAME, AG-75 OPPOSED BLADE DAMPER, STANDARD WHITE FINISH AND FACTORY INSULATED BACK PAN.
D CFM	111-250	8"Ø	24x24	20	BASIS OF DESIGN: TITUS OMNI-AA ALUMINUM FULL FACE ARCHITECTURAL SQUARE PANEL CEILING DIFFUSER COMPLETE WITH BORDER TYPE 3 (LAY-IN) FRAME, AG-75 OPPOSED BLADE DAMPER, STANDARD WHITE FINISH AND FACTORY INSULATED BACK PAN.
E CFM	251-380	10"Ø	24x24	20	BASIS OF DESIGN: TITUS OMNI-AA ALUMINUM FULL FACE ARCHITECTURAL SQUARE PANEL CEILING DIFFUSER COMPLETE WITH BORDER TYPE 3 (LAY-IN) FRAME, AG-75 OPPOSED BLADE DAMPER, STANDARD WHITE FINISH AND FACTORY INSULATED BACK PAN.
F CFM	0-350	10"x10"	12x12	20	BASIS OF DESIGN: TITUS 50F, ALL ALUMINUM FABRICATED EGG-CRATE TYPE WITH BAKED OFF-WHITE ENAMEL FINISH, WITH AG-15-AA ALLEN KEY OPERATED OPPOSED BLADE DAMPER, BORDER TYPE 1 SURFACE MOUNT FRAME AND PFAP AUXILIARY ALUMINUM MOUNTING FRAME.
G CFM	0-500	10"x22"	12x24	20	BASIS OF DESIGN: TITUS 50F, ALL ALUMINUM FABRICATED EGG-CRATE TYPE WITH BAKED OFF-WHITE ENAMEL FINISH, WITH AG-15-AA ALLEN KEY OPERATED OPPOSED BLADE DAMPER, BORDER TYPE 3 LAY-IN FRAME.
H CFM	501-1750	22"x22"	24x24	20	BASIS OF DESIGN: TITUS 50F, ALL ALUMINUM FABRICATED EGG-CRATE TYPE WITH BAKED OFF-WHITE ENAMEL FINISH, WITH AG-15-AA ALLEN KEY OPERATED OPPOSED BLADE DAMPER, BORDER TYPE 3 LAY-IN FRAME.

PEACH Engineering
1214 1st Avenue Suite 210
Columbus, GA 31902
(706) 596-1840
Fax: (706) 596-9233

POLY, INC.
1935 Headland Avenue, Dothan, AL 36303, 334-793-4700
102 Sunset Lane, Shalimar, FL 32579, 850-609-1100
2135 University Blvd. Ste. A, Tuscaloosa, AL 35401, 205-752-4037
WWW.POLY-INC.COM

DESIGNED BY: WHS | DRAWN BY: DSD | DATE: APRIL, 2022
ENG/ARCH/SURVEYOR OF RECORD: CLAYTON M. WILKS | REGISTRATION No. 7609

Cert. of Auth. No.	AL.	FL.	GA.
ARCHITECT	CA-0480	AA-C001551	001118
ENGINEER	CA-78-E	CA-1818	001118
SURVEYOR			

These drawings are copyrighted and the property of Poly-Inc. Any use, partial or full reproduction is prohibited except by written Agreement with Poly-Inc.

COTTONWOOD HIGH SCHOOL FIELD HOUSE FOR HOUSTON COUNTY BOARD OF EDUCATION

SCHEDULES

SHEET No. M-300
PROJECT No. 26394.02

REVISION DESCRIPTION | Revision | Description | Date

ALABAMA LICENSED NO. 14807 PROFESSIONAL ENGINEER 04/18/2022

FLOOR PLAN

G:\CLEANSTUFF-15-28\26394 Houston BOE Open End Projects\26394.02 - Cottonwood Fieldhouse\03 - Final Design\ARCHITECTURE\CHS Fieldhouse.rvt

BID DOCUMENTS

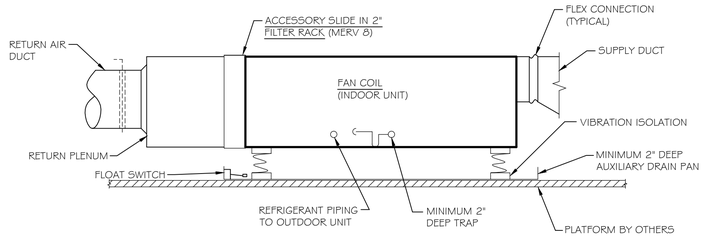

FC INDOOR DETAIL
N.T.S.

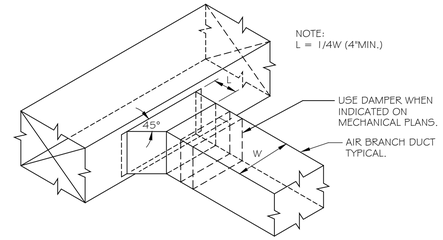

BRANCH DUCT TAKE-OFF AND DAMPER DETAIL
N.T.S.

MECHANICAL LEGEND

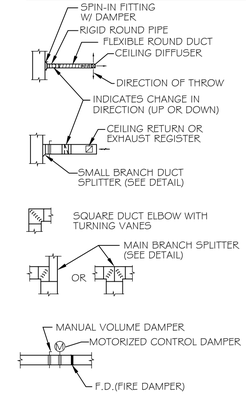

(T) FC-1	THERMOSTAT AC UNIT NO.
(H) %RH	HUMIDISTAT WITH AC UNIT NO.
(S) CO_2	CARBON DIOXIDE SENSOR
(S) CO	CARBON MONOXIDE SENSOR
EF-1	EXHAUST FAN NO.
GV-1	GRAVITY VENT
S.A.	SUPPLY AIR
R.A.	RETURN AIR
O.A.	OUTSIDE AIR
RTAC-1	ROOFTOP UNIT NO.
10"Ø	ROUND DUCT SIZE
36"x16"	DUCT SIZE (INSIDE DIMENSIONS)
FD	FIRE DAMPER
(M)	MOTORIZED DAMPER
L	MANUAL BALANCING DAMPER
U.C.	UNDERCUT DOOR A MINIMUM OF 3/4"
C	CONDENSATE PIPING
R	REFRIGERANT PIPING

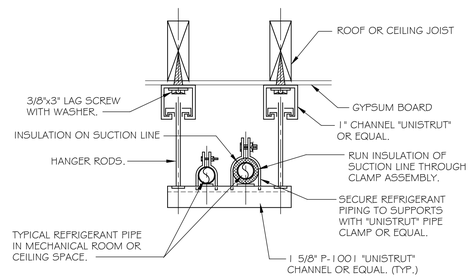

SUSPENDED REFRIGERANT PIPE SUPPORT AT CEILING
N.T.S.

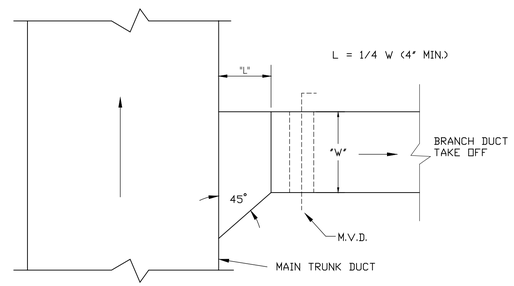

SMALL BRANCH SPLITTER DAMPER DETAIL

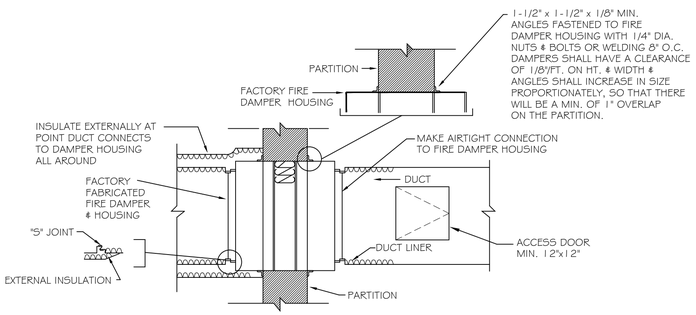

TYPICAL FIRE DAMPER DETAIL
N.T.S.

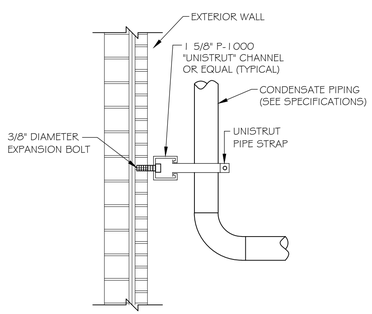

CONDENSATE PIPING SUPPORT DETAIL
N.T.S.

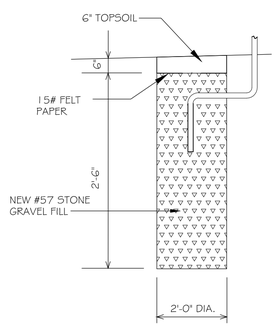

SECTION
DRYWELL DETAIL
N.T.S.

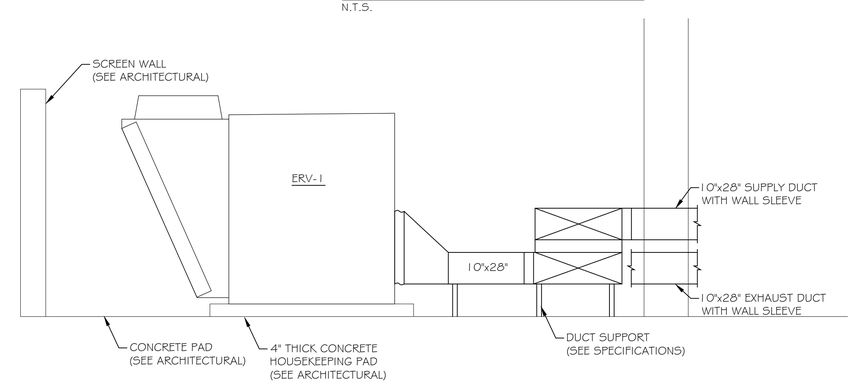

ERV-1 DETAIL
SCALE: 1/2" = 1'-0"

PEACH Engineering
1214 1st Avenue Suite 210
Columbus, GA 31902
(706) 596-1840
Fax: (706) 596-9233

ALABAMA LICENSED NO. 14807 PROFESSIONAL ENGINEER SHERRI
04/18/2022

POLY

Revision	REVISION DESCRIPTION	Description	Date
			00-00-0000

DESIGNED BY: WHS
DRAWN BY: DSD
DATE: APRIL 2022
ENG/ARCH/SURVEYOR OF RECORD: CLAYTON M. WILKS
REGISTRATION No. 7809
Cert. of Auth. No.
ARCHITECT JAA-0080 FL JAA-C001553 GA 001118
ENGINEER CA-7842 CA-1818 001118
SURVEYOR

These drawings are the property of Poly-Inc. Any reproduction of all or part of this drawing is prohibited except by written agreement with Poly-Inc.

POLY, INC.
1935 Headland Avenue, Dothan, AL 36303
334-793-4700
102 Sunset Lane Shalimar, FL 32579 850-609-1100
2135 University Blvd, Ste. A Tuscaloosa, AL 35401 205-752-4037
WWW.POLY-INC.COM

COTTONWOOD HIGH SCHOOL FIELD HOUSE FOR HOUSTON COUNTY BOARD OF EDUCATION

DETAILS

SHEET No.
M-400

PROJECT No.
26394.02

BID DOCUMENTS

1/11/2022 1:32:01 PM
FLOOR PLAN
G:\CLEANSTUFF-15-28\26394 Houston BOE Open End Projects\26394.02 - Cottonwood Fieldhouse\03 - Final Design\ARCHITECTURE\CHS Fieldhouse.rvt

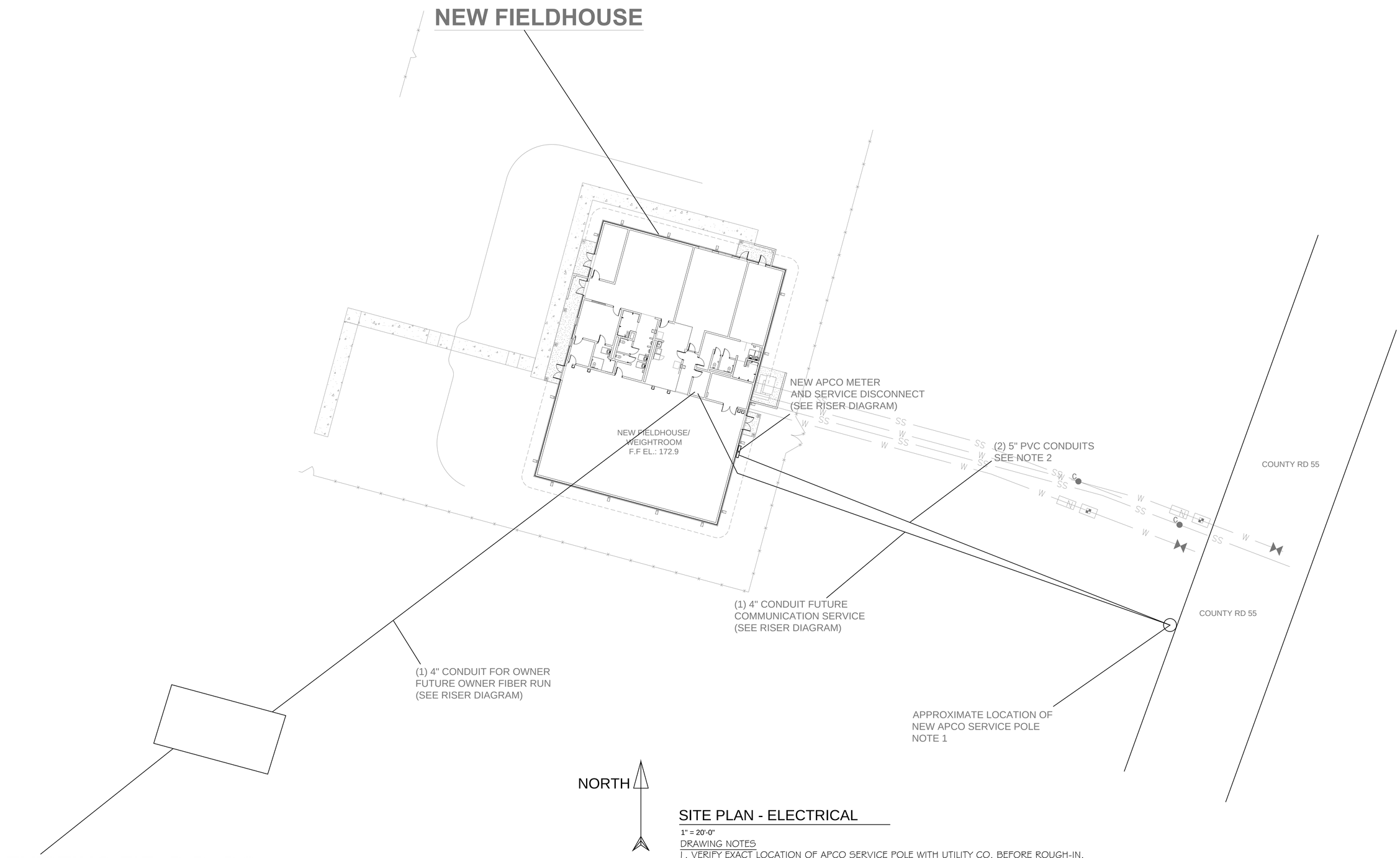

SITE PLAN - ELECTRICAL

1" = 20'-0"

DRAWING NOTES

1. VERIFY EXACT LOCATION OF APCO SERVICE POLE WITH UTILITY CO. BEFORE ROUGH-IN.
2. COORDINATE INSTALLATION OF CONDUITS WITH APCO FOR CURRENT REQUIREMENTS RELATED TO DEPTH OF COVERAGE AND TURN UP INSTRUCTIONS.

PEACH Engineering
1214 1st Avenue Suite 210
Columbus, GA 31902
(706) 596-1840
Fax: (706) 596-9233

ALABAMA REGISTERED No. 11909 PROFESSIONAL ENGINEER THOMAS W. MOORE
04/18/2022

POLY

Revision	REVISION DESCRIPTION	Description	Date
			00-00-0000

POLY, INC.
1935 Headland Avenue,
Dothan, AL 36303
334-793-4700
102 Sunset Lane 2135 University Blvd, Ste. A
Shalimar, FL 32579 Tuscaloosa, AL 35401
850-609-1100 205-752-4037
WWW.POLY-INC.COM

DESIGNED BY: TWM	DRAWN BY: JML	DATE: APRIL, 2022
ENGIARCHSURVEYOR OF RECORD: CLAYTON M. WILKS		REGISTRATION No. 7809
Cert. of Auth. No.	FL. GA.	
ARCHITECT DCA040	AA-C007055 001118	
ENGINEER CA-7842E	CA-1918 001118	
SURVEYOR		

These drawings are copyrighted and are the property of Poly-Inc. Any reproduction or other reproduction is prohibited except by written agreement with Poly-Inc.

COTTONWOOD HIGH SCHOOL FIELD HOUSE FOR HOUSTON COUNTY BOARD OF EDUCATION

SITE PLAN - ELECTRICAL

SHEET No.
E-100

PROJECT No.
26394.02

BID DOCUMENTS

1/11/2022 1:32:01 PM

FLOOR PLAN

G:\CLEANSTUFF-15-28\26394 Houston BOE Open End Projects\26394.02 - Cottonwood Fieldhouse\03 - Final Design\ARCHITECTURE\CHS Fieldhouse.rvt

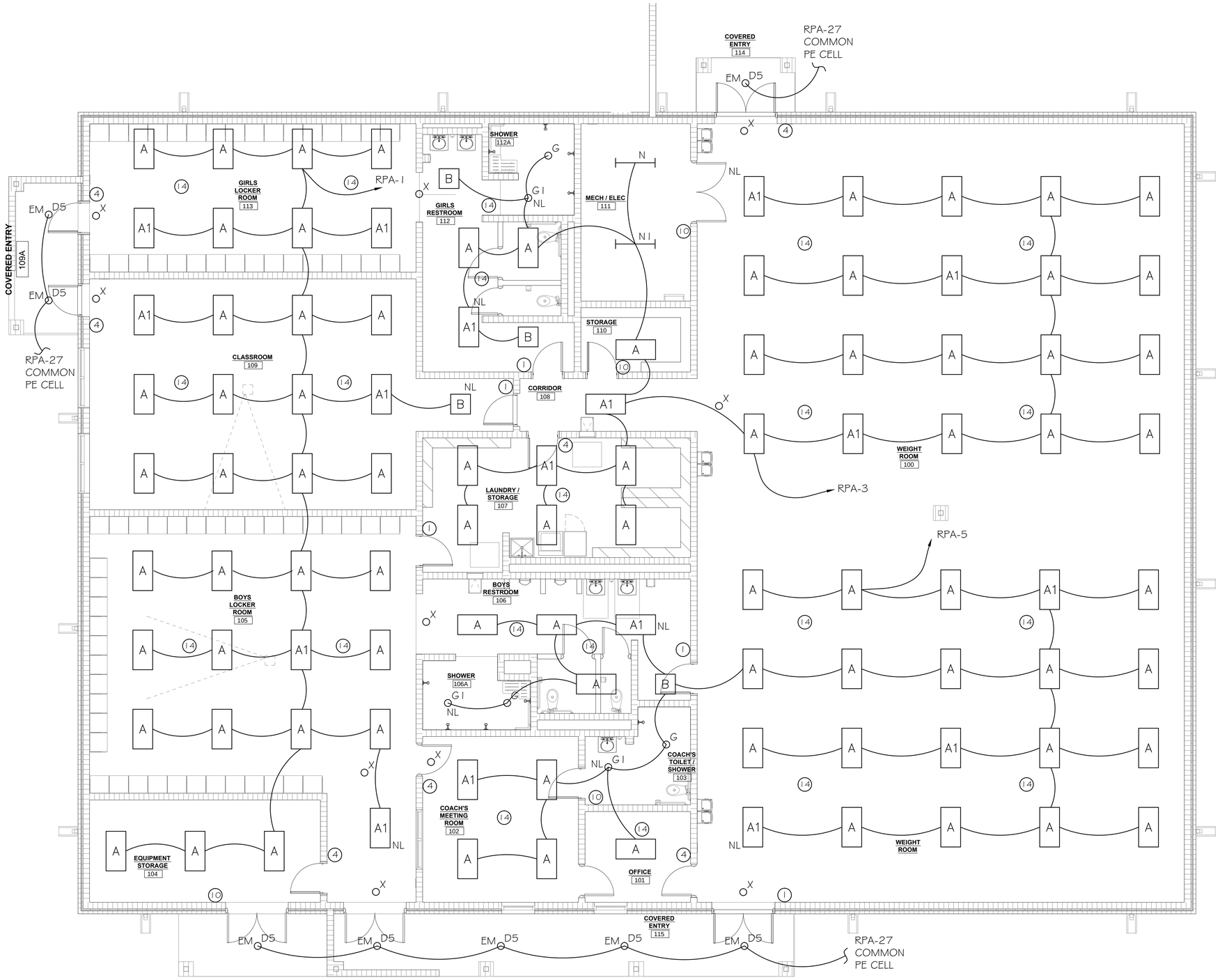

NORTH

FLOOR PLAN - LIGHTING

3/16" = 1'-0"

LIGHTING FIXTURE SCHEDULE

A	LITHONIA: CPX LED 2X4 40K 50LM COORDINATE WITH CEILING "A1" INDICATES EMERGENCY BATTERY
B	LITHONIA: CPX LED 2X2 40K 33LM COORDINATE WITH CEILING
D5	LITHONIA: LDN6 50L LED DOWNLIGHT COORDINATE WITH CEILING AND RCP EM INDICATES EMERGENCY BATTERY FIXTURE SUPPLIED WITH WET LOCATION OPTION
G	LITHONIA: LBR6 40LM 40K AR LSS MWD MVOLT SHOWER FIXTURE WET LOCATION RATED "G1" TO HAVE EM BATTERY COORDINATE WITH CEILING AND RCP
N	LITHONIA: ZL1D L48 7000LM FST MVOLT 40K WH COORDINATE WITH CANOPY: "N1" INDICATES EM BATTERY
X	LITHONIA: LED EXIT LQM S R MVOLT ELN PROVIDE WITH BATTERY FOR EMERGENCY CONNECT TO NEAREST UNSWITCHED HOT LEG
NL	INDICATES THAT FIXTURE SHALL OPERATE AS A 24/7 NIGHT LIGHT FIXTURE

LIGHTING CONTROL SCHEDULE

1 LIGHTING CONTROL DEVICE 1
NLIGHT NPODM WALL POD ON/OFF CONTROL

14 LIGHTING CONTROL DEVICE 14
NCM PDT 9 RJ8 STANDARD RANGE DUAL TECHNOLOGY
360 DEGREE OCCUPANCY SENSOR, CEILING MOUNTED

10 LIGHTING CONTROL DEVICE 10
SENSOR SWITCH WSD PDT WALL SWITCH
PUSHBUTTON ONE ON/OFF CONTROL, DUAL TECH DETECTION

4 LIGHTING CONTROL DEVICE 4
NLIGHT NPODM-DX WALL POD ONE ON/OFF CONTROL, ONE
DIMMER CONTROL

LIGHTING CONTROL AND ASHRAE 90.1 (2013) COMPLIANCE NOTES

LIGHTING CONTROL INSTRUCTIONS:

THE INTENT OF THE LIGHTING CONTROL SYSTEM IS TO BE NLIGHT WITH ALL INTEGRAL LIGHTING CONTROLS BUILT INTO THE FIXTURES THEMSELVES WHEN AVAILABLE.

IN ALL CASES THE FIXTURES ARE INTERCONNECTED WITH CAT5 CABLING FOR COMMUNICATION PURPOSES WITH THE CONTROL DEVICES. THE CONTRACTOR WILL WORK WITH THE NLIGHT DISTRIBUTOR TO PRODUCE AN INSTALLATION AND CONTROL SHOP DRAWING FOR REVIEW TO ENSURE ALL OF THE CONTROLS ARE PROPERLY ACCOUNTED FOR AND COORDINATED BEFORE INSTALLATION. THIS DRAWING WILL BE SUBMITTED TO THE ENGINEER FOR COMMENTS.

OFFICE AND CONFERENCE SPACES:
THESE SPACES ARE SHOWN TO BE CONTROLLED VIA A CEILING MOUNTED STANDARD RANGE CEILING MOUNTED OCCUPANCY SENSOR ALONG WITH A WALL MOUNTED ON/OFF AND DIMMER SWITCH. CONTROLS SHALL BE PROGRAMMED TO ALIGN WITH ASHRAE 90.1 (2013) CRITERIA FOR THESE SPACES.

STORAGE SPACES:
THESE SPACES ARE SHOWN TO BE CONTROLLED VIA A WALL MOUNTED OCCUPANCY SENSOR WITH ON/OFF BUTTON. PROGRAM TO BE MANUAL ON PER ASHRAE 90.1 2013

SINGLE TOILETS:
THESE SPACES ARE SHOWN TO BE CONTROLLED VIA A WALL MOUNTED OCCUPANCY SENSOR WITH ON/OFF BUTTON

GANG TOILETS:
THESE SPACES WILL BE CONTROLLED VIA CEILING MOUNTED OCCUPANCY SENSORS. COVERAGE AND FUNCTION SHALL BE VERIFIED BY THE NLIGHT REP. WITH LAYOUT. SENSORS SHALL BE PROGRAMMED SUCH THAT IN THE EVENT THE WALL BUTTON IS ACTIVATED OFF BUT OCCUPANTS REMAIN THE OCCUPANCY SENSOR WILL RESET TO MASTER AFTER 10 SECONDS AND RESTORE LIGHTING IF ACTIVITY DETECTED.

WEIGHT ROOM/LOCKER ROOMS:
THESE SPACES ARE SHOWN TO BE CONTROLLED VIA A CEILING MOUNTED STANDARD RANGE CEILING MOUNTED OCCUPANCY SENSOR ALONG WITH A WALL MOUNTED ON/OFF SWITCH. CONTROLS SHALL BE PROGRAMMED TO ALIGN WITH ASHRAE 90.1 (2013) CRITERIA FOR THESE SPACES. MULTIPLE OCCUPANCY SENSORS SHALL BE PROGRAMMED TO OPERATE IN SERIES SO THAT ENTIRE AREA FUNCTIONS AS ONE SPACE.

CLASSROOM:
THESE SPACES ARE SHOWN TO BE CONTROLLED VIA A CEILING MOUNTED STANDARD RANGE CEILING MOUNTED OCCUPANCY SENSOR ALONG WITH A WALL MOUNTED ON/OFF AND DIMMER SWITCH. CONTROLS SHALL BE PROGRAMMED TO ALIGN WITH ASHRAE 90.1 (2013) CRITERIA FOR THESE SPACES.

PEACH Engineering
1214 1st Avenue Suite 210
Columbus, GA 31902
(706) 596-1840
Fax: (706) 596-9233

ALABAMA REGISTERED No. 11909 PROFESSIONAL ENGINEER THOMAS W. MOORE
04/18/2022

Revision	REVISION DESCRIPTION	Date
		00-00-0000

DATE: APRIL, 2022
REGISTRATION No. 7609
These drawings are copyrighted and the property of Poly-Inc. Any reproduction or use of reproduction is prohibited except by written agreement with Poly-Inc.

DESIGNED BY: TKW
DRAWN BY: JMC
ENG/ARCH/SURVEYOR OF RECORD: CLAYTON M. WILKS
Cert. of Auth. No.: FL GA
ARCHITECT: AA-C001053 001118
ENGINEER: CA-1818 001118
SURVEYOR:

POLY, INC.
1905 Headland Avenue,
Dothan, AL 36303
334-793-4700
102 Sunset Lane Shalimar, FL 32579 850-609-1100
2135 University Blvd, Ste. A Tuscaloosa, AL 35401 205-752-4037
WWW.POLY-INC.COM

COTTONWOOD HIGH SCHOOL FIELD HOUSE FOR HOUSTON COUNTY BOARD OF EDUCATION

FLOOR PLAN - LIGHTING

SHEET No.
E-200

PROJECT No.
26394.02

BID DOCUMENTS

1/11/2022 1:32:01 PM
FLOOR PLAN
G:\CLEANSTUFF-15-28\26394 Houston BOE Open End Projects\26394.02 - Cottonwood Fieldhouse\03 - Final Design\ARCHITECTURE\CHS Fieldhouse.rvt

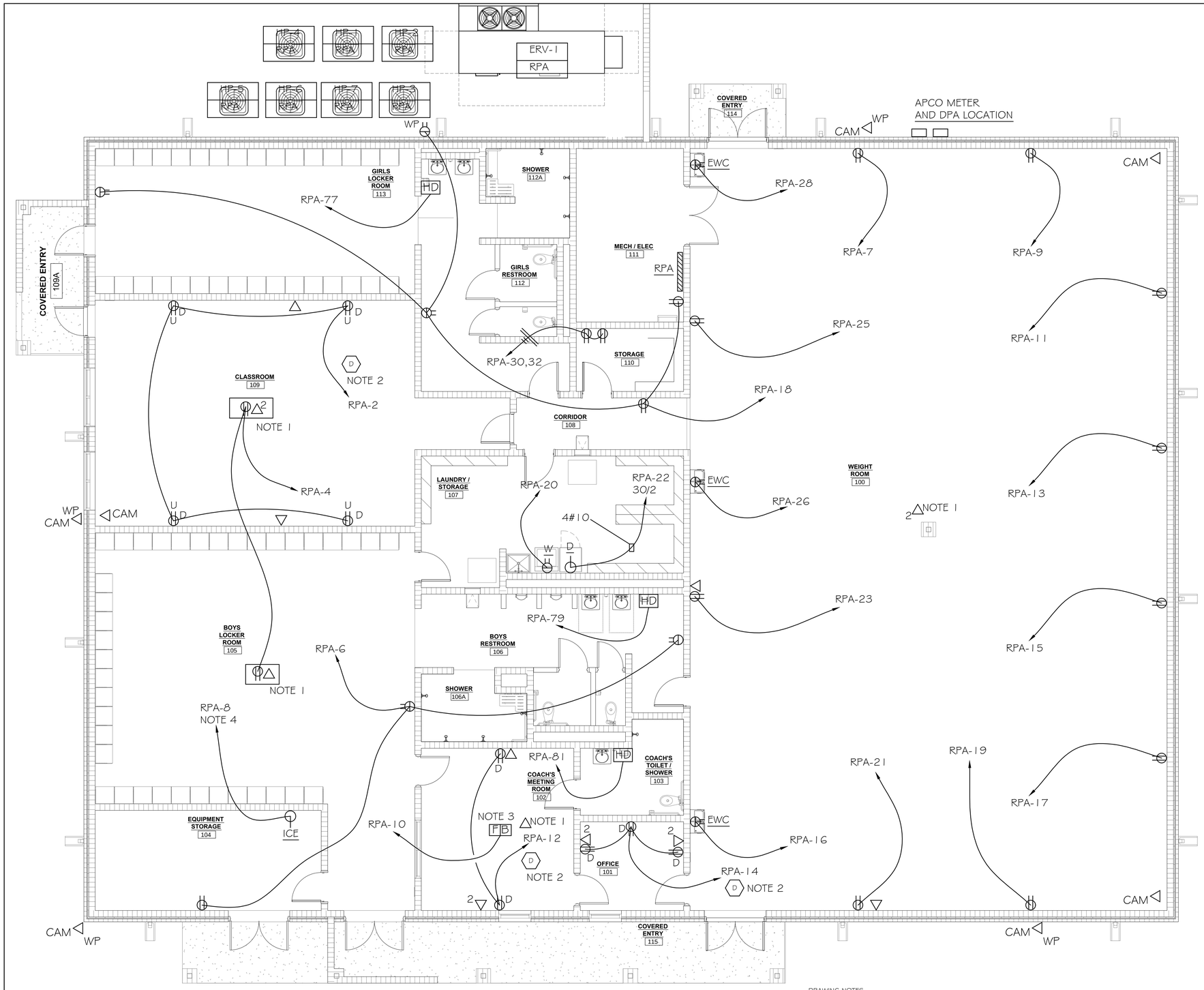

FLOOR PLAN - POWER & AUX.

3/16" = 1'-0"

NORTH

DRAWING NOTES
1. INSTALL DEVICES FLUSH IN CEILING FOR FUTURE USE. PROVIDE DATA OUTLETS WITH 25 FT. OF SLACK CABLE SUCH THAT THE DEVICE MAY BE LOCATED IN EITHER CORNER OF THE ROOM.
2. SEE RECEPTACLE CONTROL DETAIL.
3. PROVIDE 1" CONDUIT TO NEAREST WALL TO ABOVE CEILING AREA FOR FUTURE DATA. ROUTE POWER CIRCUIT IN 3/4" CONDUIT IN SAME MANNER.
4. VERIFY THIS CIRCUIT SIZE BEFORE ROUGH-IN. EQUIPMENT NOT SELECTED AT TIME OF DESIGN.

TAMPER RESISTANT RECEPTACLE NOTE

ALL 120V RECEPTACLES IN THIS FACILITY SHALL BE TAMPER RESISTANT IN COMPLIANCE WITH NEC 406.12

ELECTRICAL SYMBOLS

- WALL OUTLET, DUPLEX OUTLET, 20 A, 125 V, GROUNDED, GROUND FAULT CIRCUIT INTERUPTER, HUBBELL #GF-5362-GY
- WALL OUTLET, DUPLEX OUTLET, 20 A, 125 V, GROUNDED, HUBBELL #5362
- WALL OUTLET, DOUBLE DUPLEX OUTLET, 20 A, 125 V, GROUNDED, HUBBELL #5362: "U" INDICATES TO PROVIDE WITH TWO USB CHARGING PORTS
- PROVIDE OUTLET TYPE CALLED FOR BY MANUFACTURER
- WALL OUTLET, SINGLE OUTLET, 50 A, 250 V, 3 WIRE, GROUNDED MATCH PLUG TO EQUIPMENT SUPPLIED TO PROJECT
- CEILING OUTLET,JUNCTION BOX WITH FLEXIBLE CONNECTION TO EQUIPMENT
- WALL OUTLET,JUNCTION BOX WITH FLEXIBLE CONNECTION TO EQUIPMENT
- LIGHTING / POWER PANEL - SEE SPECIFICATIONS AND PANELBOARD SCHEDULES
- • UP INDICATES CONDUIT STUB UP • DN INDICATES CONDUIT STUB DOWN
- BRANCH CIRCUIT CONCEALED IN FLOOR OR GROUND
- BRANCH CIRCUIT CONCEALED IN WALL OR CEILING
- HOME RUN TO PANELBOARD, ANY CIRCUIT WITHOUT FURTHER DESIGNATION
- 2#12 - 1/2 "C
- 3#12 - 1/2 "C
- 4#12 - 1/2 "C
  ETC, PER NATIONAL ELECTRICAL CODE
- E EMPTY CONDUIT - 3/4 "C UNLESS OTHERWISE NOTED
- BRANCH CIRCUIT EXPOSED
- EXHAUST FAN MOTOR-FURNISHED BY OTHERS, CONNECTION BY ELECTRICAL CONTRACTOR
- FUSED DISCONNECT SWITCH

NTS	NOT TO SCALE		
AFF	ABOVE FINISHED FLOOR		
EX	EXISTING	WH	WATER HEATER
VER	VERIFY LOCATION	OC	OVER COUNTER, SINK, OR CABINET
RT	RAINTIGHT	UC	UNDER COUNTER
WP	WEATHERPROOF	EF	EXHAUST FAN
102	ROOM NUMBER	D	DRYER
EWC	ELECTRIC WATER COOLER	W	WASHER
NL	NIGHT LIGHT		GROUNDING ELECTRODE PER NEC
RMC	RIGID METAL CONDUIT		
EMT	ELECTRICAL METALLIC TUBING		
IMC	INTERMEDIATE METAL CONDUIT		

- F FIRE ALARM PULL STATION, MOUNT AT 48" ADA
- FIRE ALARM STROBE SPEAKER
- STROBE ONLY, NEW AND RELOCATED
- FACP FIRE ALARM CONTROL PANEL: EXISTING NOTIFER IN MAIN BUILDING TO REMAIN
- SMOKE DETECTOR, RELOCATED AND NEW
- F HEAT DETECTOR, COMBINATION FIXED AND RATE OF RISE: NEW
- FC-1 (SUPPLY) DUCT MOUNTED SMOKE DETECTOR
- INDICATES DATA DROP TO BE INSTALLED AT THIS LOCATION NUMBER INDICATES THE NUMBER OF CABLES: IF NO NUMBER IS SHOWN THEN ONE DROP IS ASSUMED
- WP INDICATES WEATHERPROOF DATA DROP BOX NUMBER INDICATES THE NUMBER OF CABLES: IF NO NUMBER IS SHOWN THEN ONE DROP IS ASSUMED
- CAM INDICATES DATA DROP TO BE USED FOR CAMERA SYSTEM
- UNIT 'MARK', SEE EQUIPMENT CALCULATIONS FOR CIRCUIT CHARACTERISTICS
- UNIT CIRCUIT DESIGNATION
- FB FLOOR POWER/DATA BOX: EQUAL TO WIREMOLD MODULINK 800MP NON-METALIC SERIES: PROVIDE COMPLETE WITH ALL NEEDED ACCESSORIES
- HD ELECTRIC HAND DRYER

DATA INSTALLATION NOTES:

THE INTENT IS FOR THE COMMUNICATIONS CONTRACTOR TO INSTALL A COMPLETE NETWORK CABLING SYSTEM

BELOW ARE LISTED THE COMPONENTS FOR THE COMM ROOM 106C

ALL COPPER CABLING SHALL BE CERTIFIED CAT 6 TERMINATED 568B ON ANGLED 48 PORT PATCH PANELS

(1) CHATSWORTH WALL MOUNTED RACK W/WIRE MANAGER: MODEL 57014-703
CHATSWORTH VERTICAL CABLE MANAGER: MODEL 13912-703
CHATSWORTH WALL TO RACK MOUNTING KIT: MODEL 11911-712
CHATSWORTH RACK MOUNTED POWER STRIP: MODEL 12816-705
UPS: TRIPP LITE SMART1000RM2U (800W) NIC CARD: WEBCARDLX
CORNING RACK MOUNT ENCLOSURE: MODEL CCH-02U
CORNING OM3 COUPLER PANEL, LC: MODEL CCH-CP12-E4
CORNING LC FIBER CONNECTOR: MODEL 95-050-99-X
MATCHING 48 PORT PATCH PANELS WITH ALL CONNECTING PATCH CORDS
EMPTY CONDUIT PROVIDE AS SHOWN ON PLANS FOR OWNER INSTALLED FIBER TO RACK

CABLING COLOR SHALL BE:
BLUE: DATA OUTLETS
WHITE: CAMERA OUTLETS
LABEL EACH CABLE AT BOTH ENDS

PATCH PANELS:
DATA DROPS SHALL TERMINATE IN THEIR OWN PATCH PANEL
CAMERA DROPS SHALL TEMINATE IN THEIR OWN PATCH PANEL

UPON COMPLETION CERTIFY ALL CABLING AND PROVIDE TEST RESULTS FOR OWNER REVIEW
PROVIDE AS-BUILT DRAWINGS UPON COMPLETION FOR OWNER INSTALLER
MUST BE CERTIFIED CABLING AND FIBER OPTIC TECHNICIAN

E.C. MUST COORDINATE EXACT POWER REQUIREMENTS FOR VENDOR

PEACH Engineering
1214 1st Avenue Suite 210
Columbus, GA 31902
(706) 596-1840
Fax: (706) 596-9233

ALABAMA REGISTERED No. 11909 PROFESSIONAL ENGINEER THOMAS W. MOORE
04/18/2022

Revision	REVISION DESCRIPTION	Description	Date
			00-00-0000

DESIGNED BY: TWM
DRAWN BY: JMC
ENG/ARCH/SURVEYOR OF RECORD: CLAYTON M. WILKS
Cert. of Auth. No.
ARCHITECT: AA-C001053 FL 001118
ENGINEER: CA-1818 GA 001118
SURVEYOR: CA-7842

DATE: APRIL, 2022
REGISTRATION No. 7609

These drawings are copyrighted and the property of Poly-Inc. Any reproduction or use of, without written agreement with Poly-Inc., is prohibited.

POLY, INC.
1935 Headland Avenue, Dothan, AL 36303
334-793-4700
102 Sunset Lane Shalimar, FL 32579 850-609-1100
2135 University Blvd, Ste. A Tuscaloosa, AL 35401 205-752-4037
WWW.POLY-INC.COM

COTTONWOOD HIGH SCHOOL FIELD HOUSE FOR HOUSTON COUNTY BOARD OF EDUCATION

FLOOR PLAN - POWER & AUX.

SHEET No.
E-300

PROJECT No.
26394.02

BID DOCUMENTS

1/11/2022 1:32:01 PM
FLOOR PLAN
G:\CLEANSTUFF-15-28\26394 Houston BOE Open End Projects\26394.02 - Cottonwood Fieldhouse\03 - Final Design\ARCHITECTURE\CHS Fieldhouse.rvt

1/11/2022 1:32:01 PM
FLOOR PLAN
G:\CLEANSTUFF-15-28\26394 Houston BOE Open End Projects\26394.02 - Cottonwood Fieldhouse\03 - Final Design\ARCHITECTURE\CHS Fieldhouse.rvt

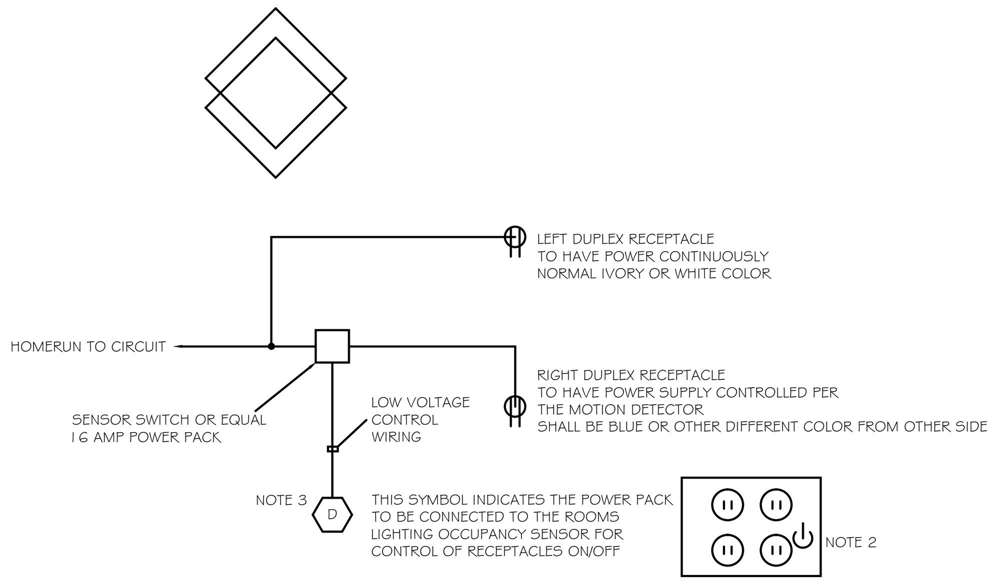

RECEPTACLE CONTROL DETAIL

NOTES:
1. THIS INSTALLATION IS TYPICAL FOR EACH LOCATION INDICATED ON THE PLANS.
2. RECEPTACLE SHALL BE MARKED ACCORDING TO NEC 406.3(E) AND BE VISIBLE AFTER INSTALLATION.
3. MOTION DETECTOR MAY BE CONNECTED TO MULTIPLE POWER PACKS DEPENDING UPON THE CONFIGURATION OF THE GIVEN ROOMS SHOWN.
4. ONE POWER PACK IS TO BE PROVIDED FOR EACH SPACE SUCH THAT THE OCCUPANCY SENSOR IN THAT GIVEN ROOM/SPACE INDEPENDENTLY FROM OTHER SPACES.

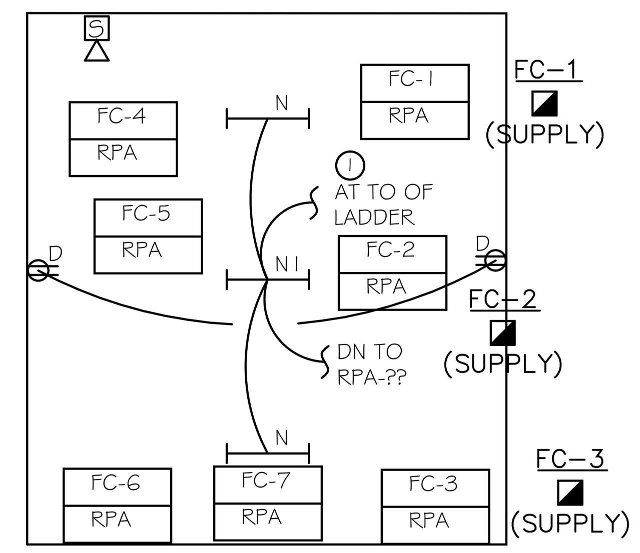

EQUIPMENT PLATFORM ELECTRICAL

1/8"= 1'-0"
NOTES:
1. SEE SHEET ARCHITECTS SHEET FOR PLAN. COORDINATE WITH THIS SHEET.
2. COORDINATE LIGHTING FIXTURE INSTALLATION WITH MECHANICAL EQUIPMENT.

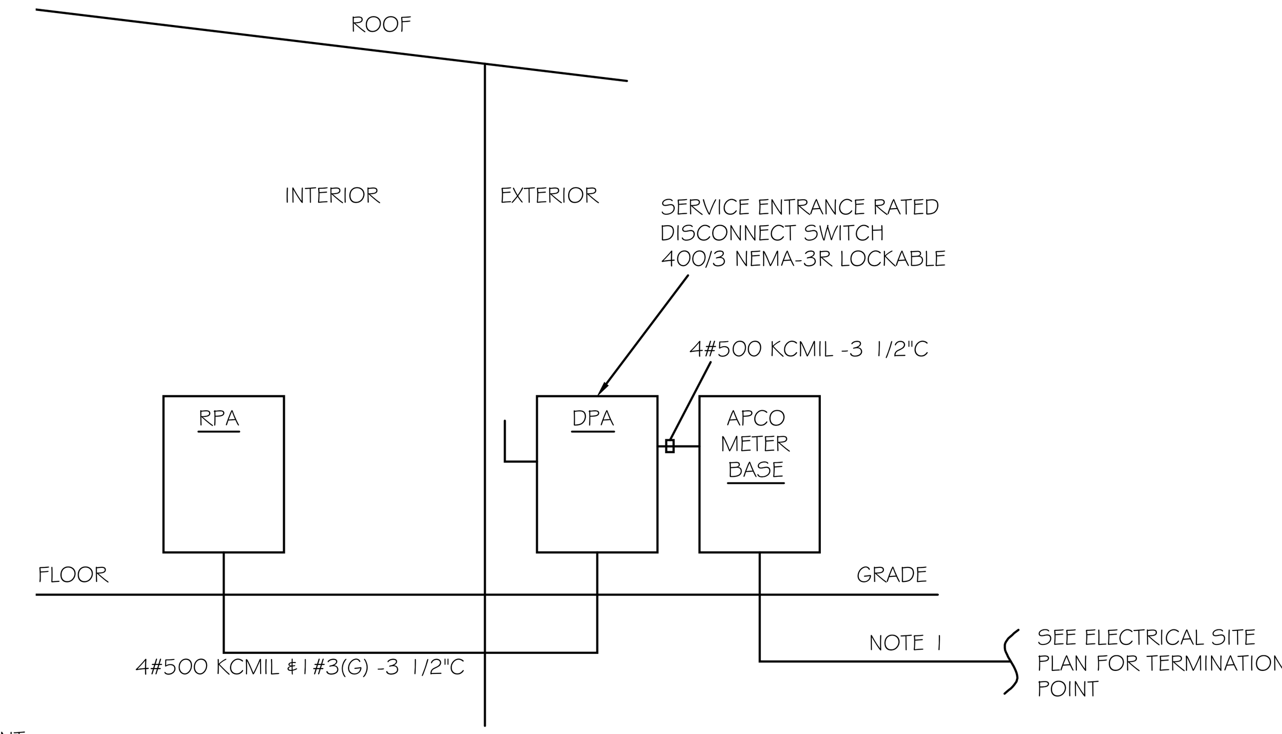

RPA RISER DIAGRAM

NTS
NOTES:
1. INSTALL (2) 5" CONDUITS FROM METER LOCATION TO APCO POLE TERMINATION POINT FOR UTILITY COMPANY FEEDER. COORDINATE THE EXACT INSTALLATION REQUIREMENTS WITH APCO BEFORE WORK BEGINS. ALL WORK SHALL CONFORM TO THE LATEST STANDARDS.

EQUIPMENT CALCULATIONS

MARK	DESCRIPTION	VA	BREAKER AMPS	BREAKER POLES	DISCONNECT	WIRE	VOLTS	REMARKS
ENERGY RECOVER UNIT								
ERV-1	ENERGY RECOVERY UNIT	10800	50	3	FURNISHED	3#8& 1#10(G)-1"C	208	
SPLIT SYSTEM HEAT PUMPS								
HP-1	HEAT PUMP OUTDOOR	5012	50	2	NEMA-3R 60/2	2#8& 1#10(G)-1"C	208	
HP-2	HEAT PUMP OUTDOOR	5012	50	2	NEMA-3R 60/2	2#8& 1#10(G)-1"C	208	
HP-3	HEAT PUMP OUTDOOR	5012	50	2	NEMA-3R 60/2	2#8& 1#10(G)-1"C	208	
HP-4	HEAT PUMP OUTDOOR	2724	30	2	NEMA-3R 30/2	2#8& 1#10(G)-1"C	208	
HP-5	HEAT PUMP OUTDOOR	3972	40	2	NEMA-3R 60/2	2#8& 1#10(G)-1"C	208	
HP-6	HEAT PUMP OUTDOOR	3972	40	2	NEMA-3R 60/2	2#8& 1#10(G)-1"C	208	
HP-7	HEAT PUMP OUTDOOR	2724	30	2	NEMA-3R 30/2	2#8& 1#10(G)-1"C	208	
FC-1	HEAT PUMP INDOOR	6800	50	2	NEMA1 60/2	2#8& 1#10(G)-1"C	208	
FC-2	HEAT PUMP INDOOR	6800	50	2	NEMA1 60/2	2#8& 1#10(G)-1"C	208	
FC-3	HEAT PUMP INDOOR	6800	50	2	NEMA1 60/2	2#8& 1#10(G)-1"C	208	
FC-4	HEAT PUMP INDOOR	6800	50	2	NEMA1 60/2	2#8& 1#10(G)-1"C	208	
FC-5	HEAT PUMP INDOOR	6800	50	2	NEMA1 60/2	2#8& 1#10(G)-1"C	208	
FC-6	HEAT PUMP INDOOR	6800	50	2	NEMA1 60/2	2#8& 1#10(G)-1"C	208	
FC-7	HEAT PUMP INDOOR	6800	50	2	NEMA1 60/2	2#8& 1#10(G)-1"C	208	
WATER HEATER								
P-12	GAS FIRED WATER HEATER	500	20	1	MOTOR SWITCH	3#12-1/2"C	120	
NOTE PROVIDE POWER FOR CONTROLS AND RECIRC PUMP								

PANEL RPA — MINIMUM INTERRUPTING RATING 28000 AMPS
NQOD — SURFACE MOUNT
120/208V,3PH,4W — 400 AMPS — MAIN BREAKER
PROVIDE WITH 240 KA PER PHASE FOR INTEGRAL SURGE PROTECTION

CKT NO	DESCRIPTION	BREAKERS POLE	BREAKERS AMP	VA	VA	BREAKERS AMP	BREAKERS POLE	DESCRIPTION	CKT NO
1	LTS	1	20	1850	1440	20	1	REC	2
3	LTS	1	20	1850	400	20	1	REC	4
5	LTS	1	20	1700	600	20	1	REC	6
7	WT RM REC	1	20	200	600	20	1	ICE	8
9	WT RM REC	1	20	200	500	20	1	FLOOR BOX	10
11	WT RM REC	1	20	200	720	20	1	REC	12
13	WT RM REC	1	20	200	1080	20	1	REC	14
15	WT RM REC	1	20	200	750	20	1	EWC	16
17	WT RM REC	1	20	200	1000	20	1	REC	18
19	WT RM REC	1	20	200	1200	20	1	WASHER	20
21	WT RM REC	1	20	200	3500	30	2	DRYER	22
23	WT RM REC	1	20	200				*	24
25	WT RM REC	1	20	200	750	20	1	EWC	26
27	EXT LTS	1	20	320	750	20	1	EWC	28
29	SPACE				500	20	1	DATA RACH	30
31	SPACE				500	20	1	DATA RACH	32
33	SPACE							SPACE	34
35	SPACE							SPACE	36
37	SPACE							SPACE	38
39	SPACE							SPACE	40
41	SPACE							SPACE	42
43	ERV-1	3	50	10800	6800	50	2	FC-1	44
45	*							*	46
47	*				6800	50	2	FC-2	48
49	HP-1	2	50	5012				*	50
51	*				6800	50	2	FC-3	52
53	HP-2	2	50	5012				*	54
55	*				6800	50	2	FC-4	56
57	HP-3	2	50	5012				*	58
59	*				6800	50	2	FC-5	60
61	HP-4	2	30	2724				*	62
63	*				6800	50	2	FC-6	64
65	HP-5	2	40	3792				*	66
67	*				6800	50	2	FC-7	68
69	HP-6	2	40	3792				*	70
71	*							SPACE	72
73	HP-7	2	30	2724				SPACE	74
75	*							SPACE	76
77	HAND DRYER	1	20	950				SPACE	78
79	HAND DRYER	1	20	950				SPACE	80
81	HAND DRYER	1	20	950				SPACE	82
83	SPACE							SPACE	84
		TOTAL		111328 VA					

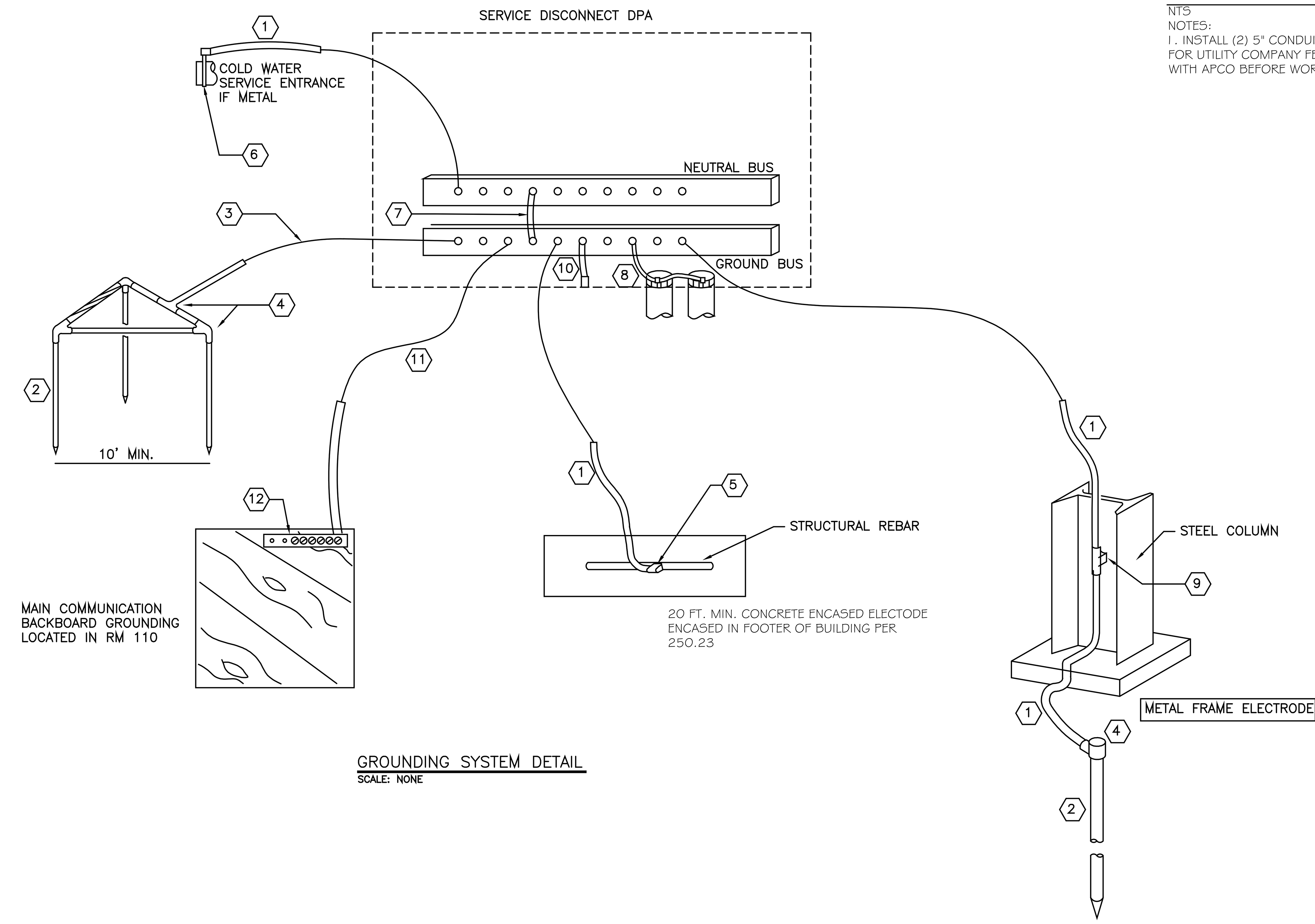

GROUNDING SYSTEM DETAIL

SCALE: NONE

GROUNDING SYSTEM DETAIL – KEY NOTES

1. 1/0 BARE GROUNDING ELECTRODE CONDUCTOR PER 250.66
2. 3/4" X 10' COPPER CLAD STEEL GROUND ROD, DRIVEN 24" BELOW GRADE MIN.
3. #6 BARE GROUNDING ELECTRODE CONDUCTOR IN PVC-40.
4. EXOTHERMIC WELD CONNECTOR: TWO CABLES TO GROUND ROD, CADWELD CABLE TO CABLE TEE, CADWELD ONE CABLE TO GROUND ROD
5. EXOTHERMIC WELD CABLE TO REBAR, CADWELD.
6. LISTED CONNECTION PER NEC 250 WITHIN 5FT OF BUILDING
7. 2/0 CAST BRONZE UL LISTED GROUND CLAMP
8. BONDING JUMPER TO GROUNDING BUSHING AND BONDING JUMPERS FROM CONDUIT TO CONDUIT. ALL CONDUIT CONNECTED TO THE SERVICE ENTRANCE ENCLOSURE SHALL BE BONDED AND SIZED PER NEC 250
9. EXOTHERMIC WELD CABLE TO FLAT STEEL
10. MAIN BONDING JUMPER SIZED BY MANUFACTURER PER NEC 250
11. #4 BONDING JUMPER IN 2" PVC-40
12. CHATSWORTH BICSI AND ANSI GROUNDING BUSBAR 13622-010

⚠ WARNING

Shock and Arc Flash Hazard
Appropriate PPE Required
Failure to Comply Can Result in Injury or Death

NOTES:
1. PROVIDE SELF-ADHESIVE VINYL LABEL TO AFFIX TO ELECTRICAL EQUIPMENT TO WARN OF ARC FLASH HAZARDS.
2. THE LABEL FORMAT AND TEXT SHALL BE IN ACCORDANCE WITH THE FIGURE.
3. THE LABEL SHALL BE LOCATED ON THE EQUIPMENT TO BE CLEARLY VISIBLE TO QUALIFIED PERSONS BEFORE EXAMINATION, ADJUSTMENT, SERVICING, OR MAINTENANCE OF THE EQUIPMENT.
4. THE SIZE OF THE LABEL SHALL BE:

EQUIPMENT TYPE	HEIGHT	WIDTH
INDOOR	4"	6"
OUTDOOR	4"	6"

1 ARC FLASH WARNING LABELS
NO SCALE

MAXIMUM VOLTAGE DROP DISTANCE CHART

THIS CHART APPLIES TO ALL 120V CIRCUITS

WIRE SIZE	MAXIMUM DISTANCE
#12	72 FT
#10	120 FT
#8	185 FT
#6	194 FT

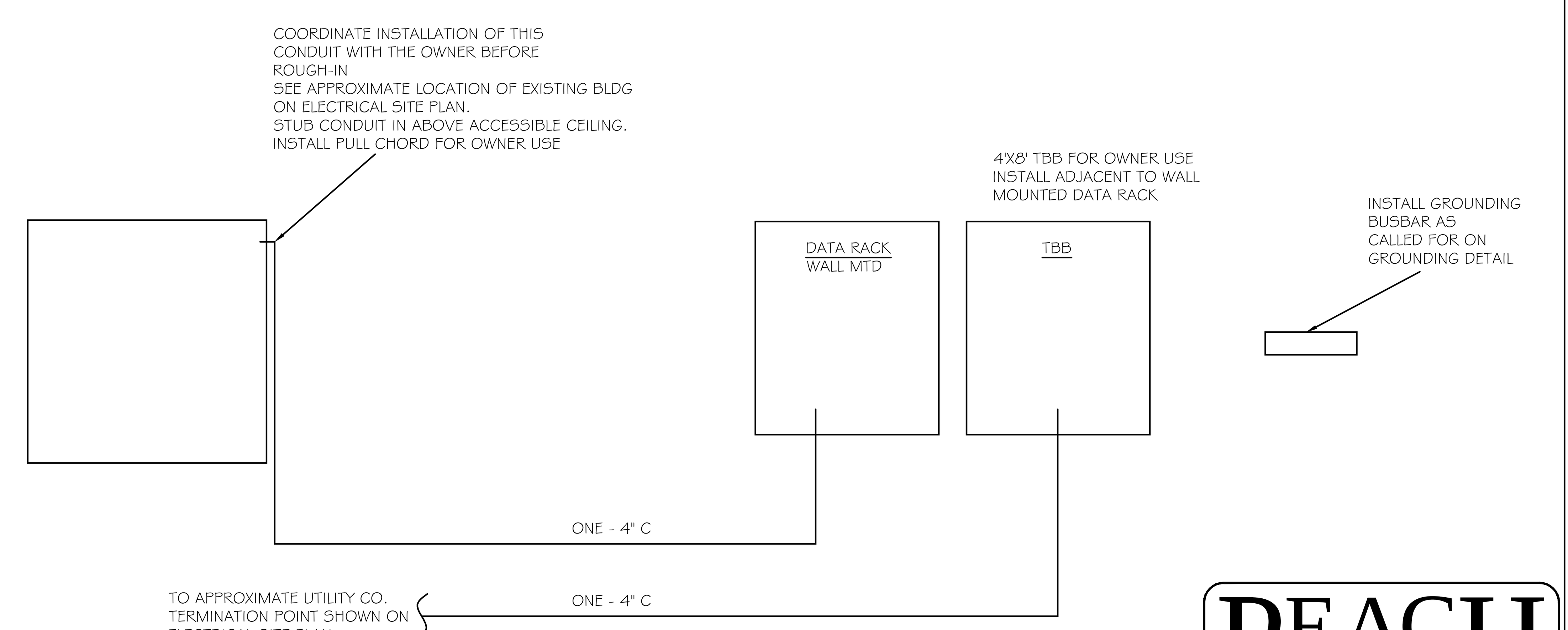

DATA RACK/TBB RISER DIAGRAM

NTS

PEACH
Engineering
1214 1st Avenue Suite 210
Columbus, GA 31902
(706) 596-1840
Fax: (706) 596-9233

ALABAMA REGISTERED PROFESSIONAL ENGINEER No. 11909
THOMAS W. MOORE
04/18/2022

POLY

Revision	REVISION DESCRIPTION	Date
1		00-00-0000

DESIGNED BY: TWM
DRAWN BY: JML
DATE: APRIL, 2022
ENG/ARCH/SURVEYOR OF RECORD: CLAYTON M. WILKS
REGISTRATION No. 7609
Cert. of Auth. No.

	AL.	FL.	GA.
ARCHITECT	CA-0480	AA-C001551	001118
ENGINEER	CA-78-E	CA-1818	001118
SURVEYOR			

POLY, INC.
1935 Headland Avenue, Dothan, AL 36303, 334-793-4700
102 Sunset Lane, Shalimar, FL 32579, 850-609-1100
2135 University Blvd. Ste, A, Tuscaloosa, AL 35401, 205-752-4037
WWW.POLY-INC.COM

These drawings are copyrighted and the property of Poly-Inc. Any use, partial or full reproduction is prohibited except by written Agreement with Poly-Inc.

COTTONWOOD HIGH SCHOOL FIELD HOUSE FOR HOUSTON COUNTY BOARD OF EDUCATION

SCHEDULES AND DETAILS

SHEET No.
E-301
PROJECT No.
26394.02

BID DOCUMENTS

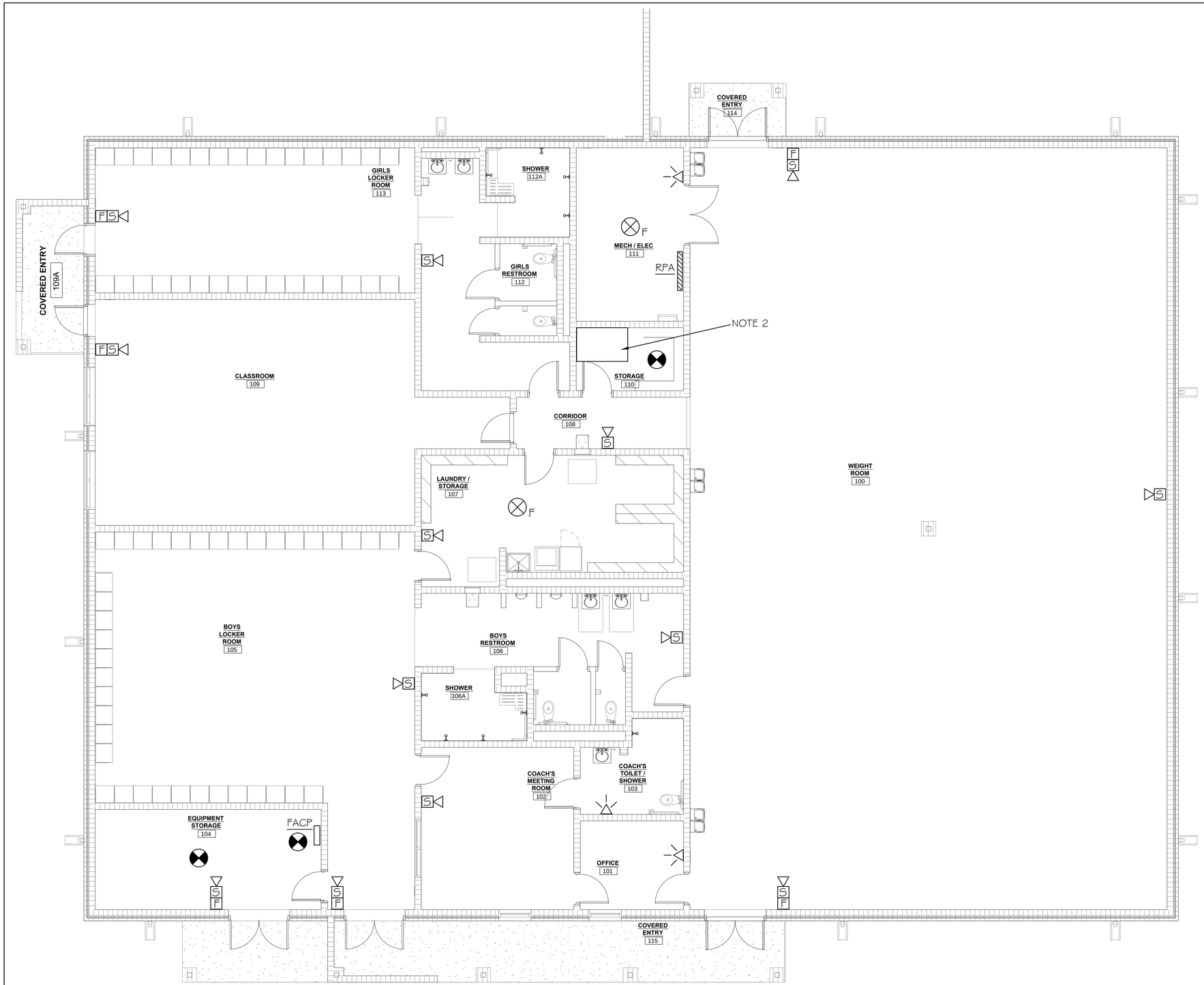

NORTH

FLOOR PLAN - FIRE ALARM

3/16" = 1'-0"

DRAWING NOTES

1. COORDINATE INSTALLATION OF DEVICES WITH OTHER TRADES OF THE PROJECT AND ARCHITECTURAL.
2. SEE DATA INSTALLATION NOTES FOR SCOPE OF WORK.

PEACH Engineering
1214 1st Avenue Suite 210
Columbus, GA 31902
(706) 596-1840
Fax: (706) 596-9233

ALABAMA REGISTERED PROFESSIONAL ENGINEER No. 11909 THOMAS W. MOORE
04/18/2022

POLY

Revision	Description	Date
1	REVISION DESCRIPTION	00-00-0000

DESIGNED BY: TWM
DRAWN BY: JML
DATE: APRIL, 2022
ENG/ARCH/SURVEYOR OF RECORD: CLAYTON M. WILKS
REGISTRATION No. 7809
Cert. of Auth. No.
ARCHITECT GA-0430 AA-C007055 FL 001118 GA
ENGINEER GA-7845 CA-1818 001118
SURVEYOR

These drawings are the property of Poly-Inc. Any reproduction or re-use without written agreement with Poly-Inc.

POLY, INC.
1935 Headland Avenue,
Dothan, AL 36303
334-793-4700
102 Sunset Lane
Shalimar, FL 32579
850-609-1100
2135 University Blvd, Ste. A
Tuscaloosa, AL 35401
205-752-4037
WWW.POLY-INC.COM

COTTONWOOD HIGH SCHOOL FIELD HOUSE FOR HOUSTON COUNTY BOARD OF EDUCATION

FLOOR PLAN - FIRE ALARM

SHEET No.
E-400

PROJECT No.
26394.02

BID DOCUMENTS

1/11/2022 1:32:01 PM
FLOOR PLAN
G:\CLEANSTUFF-15-28\26394 Houston BOE Open End Projects\26394.02 - Cottonwood Fieldhouse\03 - Final Design\ARCHITECTURE\CHS Fieldhouse.rvt