STATE OF ALABAMA
No. 3365
RICK N. LATHAN
REGISTERED ARCHITECT

LATHAN
ARCHITECTS
LATHAN ▪ BRYANT ▪ CALMA

300 CHASE PARK SOUTH • SUITE 200 • HOOVER, ALABAMA 35244
205-988-9112

ADDENDUM NO. 2
ADDITION AND RENOVATION FOR FLOMATON ELEMENTARY SCHOOL
PACKAGE A: MEDIA CENTER AND CLASSROOM ADDITION
DCM NO. 2021011 PSCA NO. 9167
Architect Job No. 21-04A
March 29, 2022

BIDS DUE:
Tuesday April 5, 2022 until
10:00 a.m., local time
Escambia County Board of Education
301 Belleville Avenue,
Brewton, AL 36426

The Plans and Specifications are here by amended. The following supersedes all contrary and/or conflicting information and is made part of the contract documents.

ATTACHED IS THE PRE-BID SIGN-IN SHEET

DRAWINGS

Architectural:

1. LS1.1 – Base Bid Life Safety Plan – See revised Shaft Wall, Attic Draft Stop, and Hollow Core Conditions for the addition of Attic Draft stops and the modification of the fire wall between existing and new construction to 3 - hours.
2. LS1.2 – Alternate Life Safety Plan - See revised Shaft Wall, Attic Draft Stop, and Hollow Core Conditions for the addition of Attic Draft stops and the modification of the fire wall between existing and new construction to 3 - hours.
3. A2.1 – Base Bid Floor Plan – see the new refrigerate line detail and increasing the fire door and from 90 to 180 minutes.
4. A2.3 – Attic Floor Plan – See the additional pair of doors in the attic for the draft stop assembly.
5. A2.7 – Door and Window Schedule and Details – see the modified fire door increased from 90 to 180 minutes.

Mechanical:

1. M1.1 – Mechanical Plans – added sizing of AHU#1 supply air duct, showed routing of refrigerant lines from outdoor to indoor equipment, and routing of ductwork and air handling equipment has been clarified.

2. M1.2 – Mechanical Attic Plan – revised AHU#1 into two units, showed routing of refrigerant lines from outdoor to indoor equipment, and routing of ductwork and air handling equipment has been clarified.
3. M2.1 – Mechanical legend schedules and details - revised AHU#1 into two units.

Electrical:

1. E0.0 – Electrical Details -revised sheet for Fixtures S1, S1EM, and W3 have been removed from the schedule and EX1 designation has been applied to lighting fixture schedule.
2. E0.1 – Electrical Site Plan - revised electrical site plan.
3. E1.1 – Lighting and Power Plan – Revised sheet to include additional exit signs have been added and the locations have been coordinated with the architect, Circuits have been revised such that they are being fed from the existing building, WSEM has been added to the emergency lighting schedule, and dimmer switches have been added to all offices and classrooms to allow bi-level control.
4. E2.1 – Lighting and Power Plan – GFCI receptacles have been added to electric drinking fountains (EWC), GFCI receptacles have been added within 6' of the outside edge of sinks in the classrooms referenced above, and AHU#1 has been modified.
5. E3.1 – Systems Plan – fire alarm riser diagram keynotes added and fire alarm modified.
6. E4.0 – Electrical Panel and Equipment Schedules – AHU #1 revised into two units, Panel 2P1 has been changed to MLO on the panelboard schedule, and the ground sizes have been verified and revised.
7. E4.1 – Electrical Details – see revised sheet.
8. E4.2 - Electrical Details – see revised sheet.

CLARIFICATIONS

1. Reference Sheet A6.2: At Elevation 9/A6.2 remove the toe-kick lighting from the Media Center Desk
2. Connect to and Match existing fire alarm system – Firelite.
3. Plumbing piping passing through masonry structures of the building shall have pipe sleeves.
4. Horizontal plumbing fixtures for lavatories and sink shall have protective wrap kits for the waste and water piping beneath the sinks.
5. Refrigerant piping from the condensing units shall be routed above grade over to two separate exterior wall locations. Refrigerant piping shall turn up on the exterior walls and pass into the attic through the soffit. A sheet metal cover per architectural detail shall be provided over the piping as protection from the elements.
6. Sizes of supply and return air ductwork have been adjusted to accommodate field conditions.
7. Mechanical sheet M1.1 and M1.2 have been revised to clarify equipment locations with routing of ductwork. This particularly applies to the outdoor air intake ductwork.
8. Each air handling units return air ducted system shall require a manual volume damper and motorized damper. These dampers are to be installed within 36 inches of return air duct connection. Balance manual volume damper to indicated air flow and interlock motorized damper with temperature controller. Temperature controls shall be seven days programable with occupied/unoccupied scheduling and auxiliary equipment contacts for control of motorized dampers. During unoccupied hours the motorized damper shall be closed and otherwise open.
9. Air Handling Unit #1 (AHU#1) as shown on M1.2 shall be deleted with associated ductwork. Replacement of this air conditioning unit shall be with two separate 4.0 fan air conditioning units. Duct systems shall be provided for each unit similar to those of classrooms. Electrical power requirements of the two new units shall be similar to classroom units.
10. All air handling units have bi-polar ionization.
11. Life safety plans have indicated fire barriers. All ducts penetrating these fire barriers shall have fire rated fire dampers at each penetration. Coordinate with Life Safety Plans for ratings of fire barriers.
12. The 3 existing units are all 1200CFM 3 ton packaged Hp Units. Supply duct size is to be 18" x 12" and return duct size is to be 22" x 12". Contractor is to field verify that these are the correct duct

sizes for ease of connection to the existing ductwork.

APPROVED MANUFACTURERS

The following manufacturers have submitted data for prior approval and have been approved by our office, **contingent upon the stipulation that their products must meet or exceed the contract specifications**.

Product	Manufacturer
Wood Doors	OshKosh

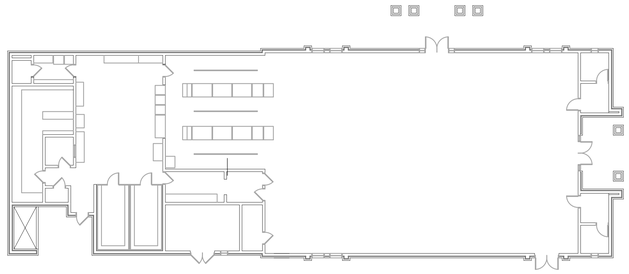

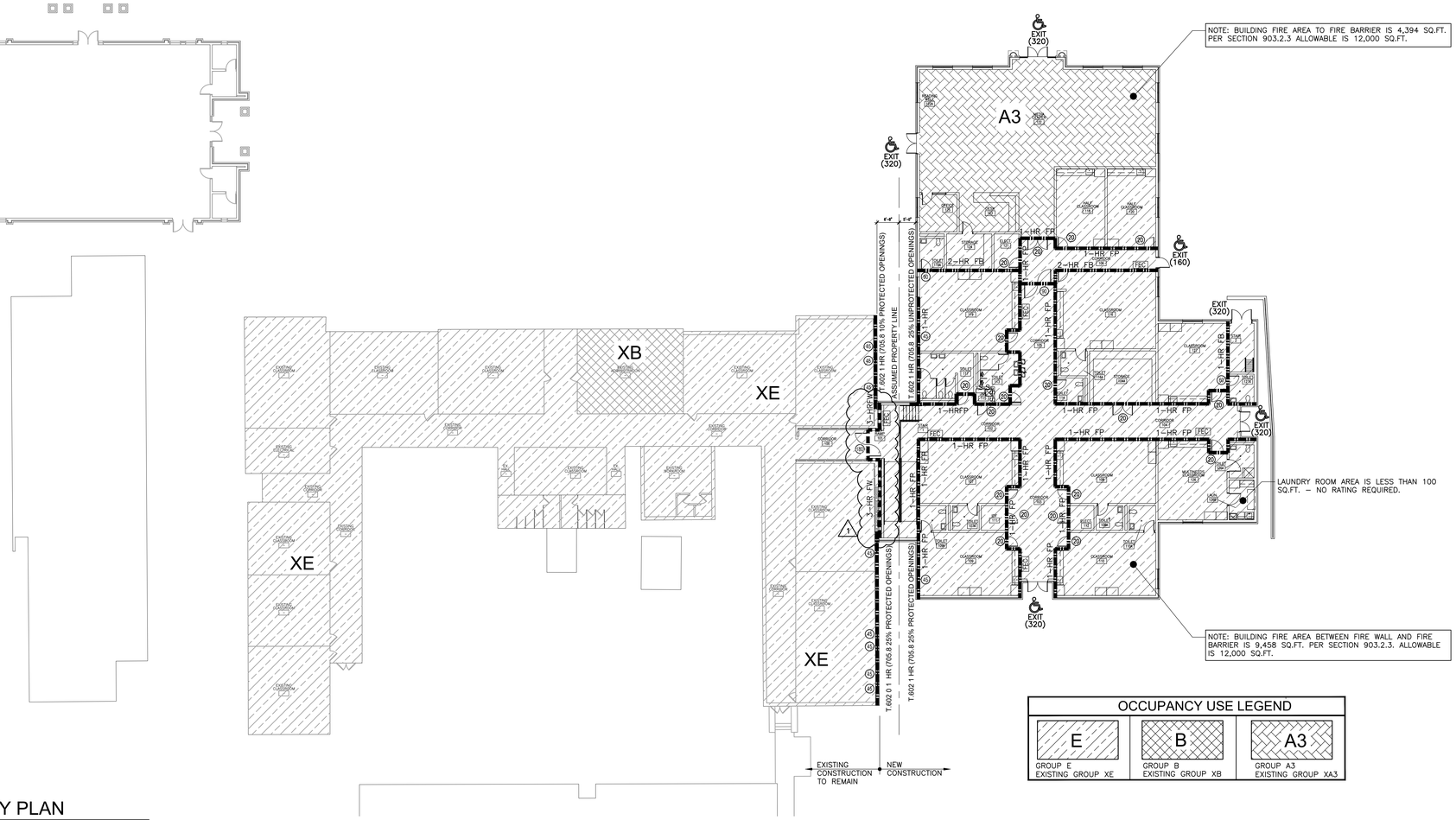

NOTE: BUILDING FIRE AREA TO FIRE BARRIER IS 4,394 SQ.FT. PER SECTION 903.2.3 ALLOWABLE IS 12,000 SQ.FT.

LAUNDRY ROOM AREA IS LESS THAN 100 SQ.FT. – NO RATING REQUIRED.

NOTE: BUILDING FIRE AREA BETWEEN FIRE WALL AND FIRE BARRIER IS 9,458 SQ.FT. PER SECTION 903.2.3. ALLOWABLE IS 12,000 SQ.FT.

1 BASE BID LIFE SAFETY PLAN

1/16" = 1'-0"

OCCUPANCY USE LEGEND

E	B	A3
GROUP E EXISTING GROUP XE	GROUP B EXISTING GROUP XB	GROUP A3 EXISTING GROUP XA3

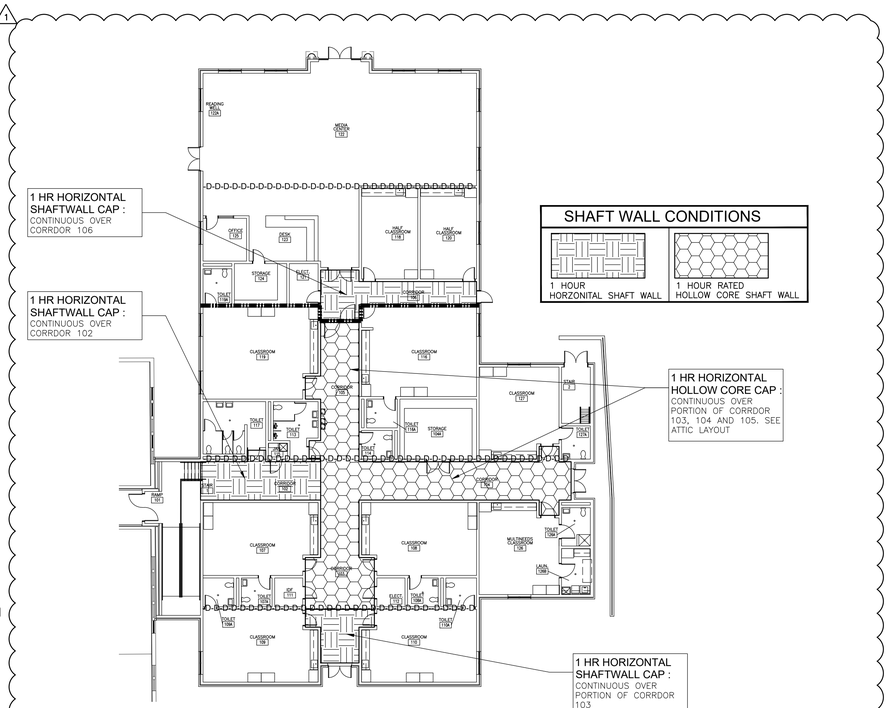

SHAFT WALL CONDITIONS

1 HOUR HORZONTAL SHAFT WALL	1 HOUR RATED HOLLOW CORE SHAFT WALL

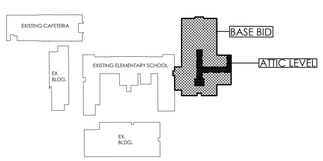

KEY PLAN

1/128" = 1'-0"

1 SHAFT WALL, ATTIC DRAFT STOP, AND HOLLOW CORE CONDITIONS

1/16" = 1'-0"

DOOR/WINDOW RATING LEGEND

- (20) 20 MINUTE DOOR AND FRAME
- (45) 45 MINUTE DOOR AND FRAME
- (60) 60 MINUTE DOOR AND FRAME
- (90) 90 MINUTE DOOR AND FRAME
- (180) 180 MINUTE DOOR AND FRAME
- (SM) SMOKE BARRIER DOOR AND FRAME

WALL TYPE LEGEND

- 1 HR WALL
- 2 HR WALL
- 3 HR WALL
- S-S-S-S-S-S-S-S-S-S-S- SMOKE WALL
- D-D-D-D-D-D-D-D-D-D-D DRAFT STOP WALL

LIFE SAFETY NOTES

- FEC — FIRE EXTINGUISHER AND CABINET (PROVIDE FIRE RATED CABINETS IN RATED WALLS.)
- FE — FIRE EXTINGUISHER
- FE(K) — K-TYPE FIRE EXTINGUISHER
- ACCESSIBLE
- EXIT (320) — EXIT CAPACITY
- EXTEND AND KEY ALL RATED WALLS TO SHAFT WALL SYSTEM, AND/OR BOTTOM OF ROOF ASSEMBLY
- STENCIL LABEL ALL RATED WALLS & DRAFT STOPS ABOVE CEILING EACH SIDE @ 20'-0" O.C. MAX.
- ALL RATED DOORS AND FRAMES TO BE LABELED WITH EMBOSSED LABELS INDICATING RATING IN MINUTES
- PROVIDE FOAM FILL INSULATION AS SPECIFIED IN ALL WALLS BETWEEN TOILETS AND CLASSROOMS.
- COORDINATE W/ ELECTRICAL & MECHANICAL AND PROVIDE CONCRETE EQUIPMENT PAD AS REQUIRED
- HE - HORIZONTAL EXIT
- FB - FIRE BARRIER
- FP - FIRE PARTITION
- FW - FIRE WALL

CHAPTER 29 - PLUMBING SYSTEMS

OCCUPANCY		WATERCLOSETS				LAVATORIES				DRINKING FOUNTAINS		SERVICE SINKS
USE	LOAD	RATIO	MALE	RATIO	FEMALE	RATIO	MALE	RATIO	FEMALE	RATIO	ALL	ALL
A3	52.56	1/125	0.21	1/65	0.40	1/200	0.13	1/200	0.13	1/500	0.11	1.00
B	3.63	1/25 FIRST 50 1/50 REMAINDER EXCEEDING 50.	0.07	1/25 FIRST 50 1/50 REMAINDER EXCEEDING 50.	0.07	1/40 FIRST 80 1/80 EXCEED 80.	0.05	1/40 FIRST 80 1/80 EXCEED 80.	0.05	1/100	0.04	
E	266.45	1/50	2.66	1/50	2.66	1/50	2.66	1/50	2.66	1/100	2.66	
S1,S2	2.55	1/100	0.01	1/100	0.01	1/100	0.01	1/100	0.01	1/1000	0.00	
REQUIRED TOTALS			2.96		3.15		2.85		2.85		2.81	1.00
PROVIDED TOTALS			7		8		6		7		4	1.00

2015 INTERNATIONAL BUILDING CODE RESEARCH

OCCUPANCY CLASSIFICATION:	GROUP E		
TYPE OF CONSTRUCTION :	TYPE IIIB (NS)		
EXISTING BUILDING :	13,881 SQ.FT.		
NEW BUILDING AREA (BASE BID):	13,715 SQ.FT.		
NEW ATTIC AREA :	2,380 SQ.FT.		
TABLE 504.4 ALLOWABLE NUMBER OF STORIES:	ALLOWABLE STORIES: 2	ACTUAL STORIES: 2	
TABLE 506.2 ALLOWABLE AREA:	AREA FACTOR: NS	14,500 S.F.	
SECTION 506.3.3 FRONTAGE INCREASE :	FRONTAGE INCREASE NOT NEEDED FOR BASE BID CONDITION.		
TABLE 601 AND 602	CONSTRUCTION TYPE:	TYPE IIIB (NS)	
	STRUCTURAL FRAME:	0	
	BEARING WALLS:	0	
	T. 602 EXTERIOR:	< 5'	1hr
		≥ 5'< 10'	1hr
		≥ 10'< 30'	0
		≥ 30'	0
	INTERIOR:	0	
	NONBEARING WALLS:		
	T. 602 EXTERIOR:	< 5'	1hr
		≥ 5'< 10'	1hr
		≥ 10'< 30'	0
		≥ 30'	0
	INTERIOR:	0	
	FLOOR CONSTRUCTION:	0	
	ROOF CONSTRUCTION:	0	
TABLE 1020.1 CORRIDOR FIRE-RESISTANCE RATING PARTITIONS AND OPENING PROTECTIVES	GROUP E UNSPRINKLERED	1	

LATHAN ARCHITECTS
LATHAN ▪ BRYANT ▪ CALMA

ADDITION AND RENOVATION FOR
FLOMATON ELEMENTARY SCHOOL
PACKAGE A: MEDIA CENTER AND CLASSROOM ADDITION
1634 POPLAR STREET, FLOMATON, AL 36441
ESCAMBIA COUNTY BOARD OF EDUCATION

STATE OF ALABAMA
No. 3365
RICK N. LATHAN
REGISTERED ARCHITECT

SHEET TITLE:
BASE BID LIFE SAFETY PLAN

PROJ. MGR.: R. LATHAN
DRAWN: S. WILSON
DATE: FEBRUARY 18, 2022
REVISIONS
1 ADDENDUM NO.1

JOB NO. 21-04A
SHEET NO:
LS1.1
3 OF 4

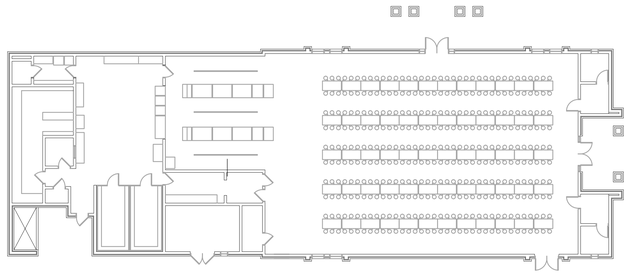

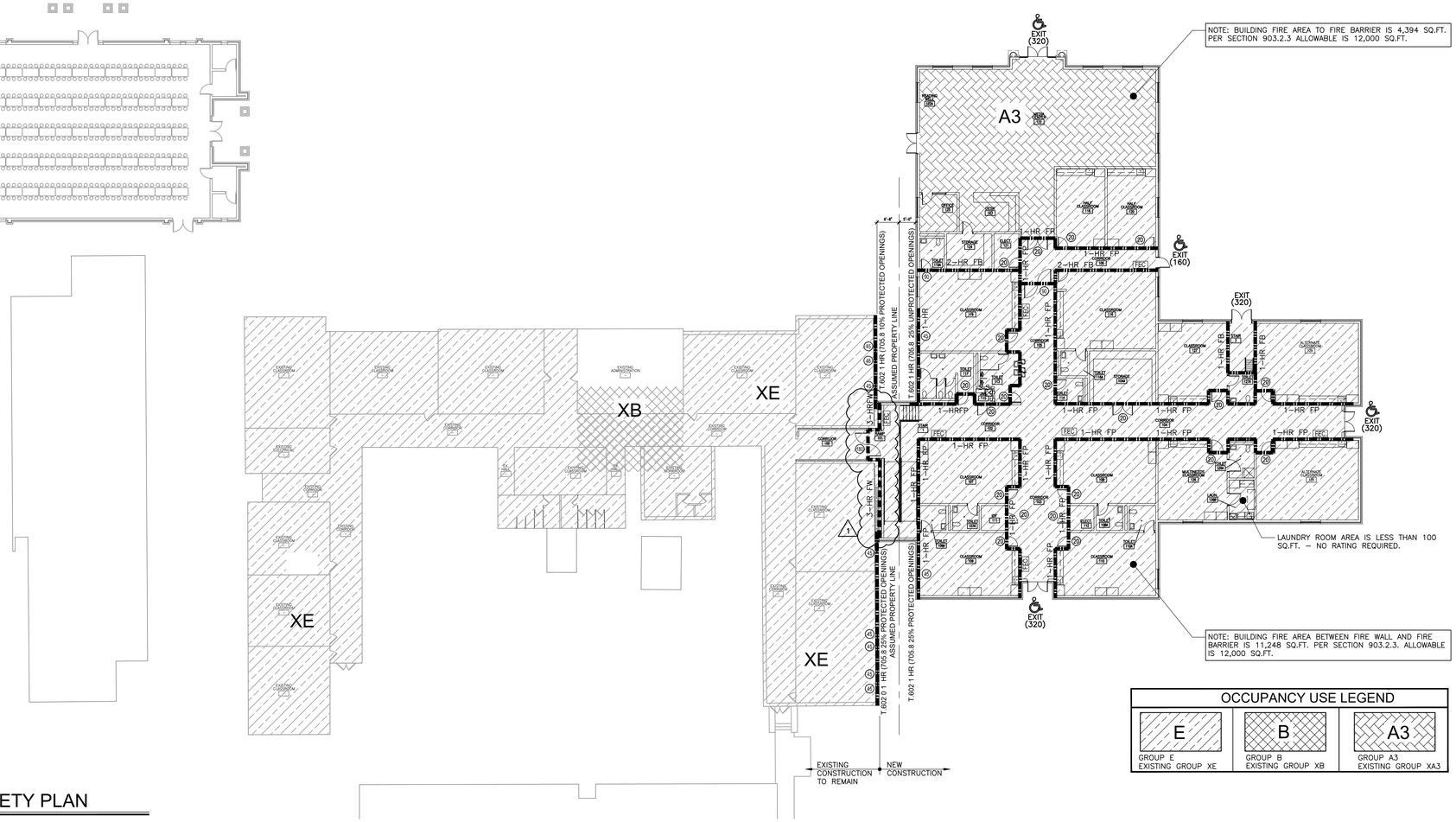

1 ALTERNATE LIFE SAFETY PLAN

1/16" = 1'-0"

OCCUPANCY USE LEGEND

E	B	A3
GROUP E EXISTING GROUP XE	GROUP B EXISTING GROUP XB	GROUP A3 EXISTING GROUP XA3

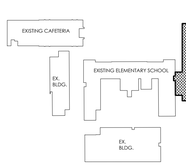

KEY PLAN

1/128" = 1'-0"

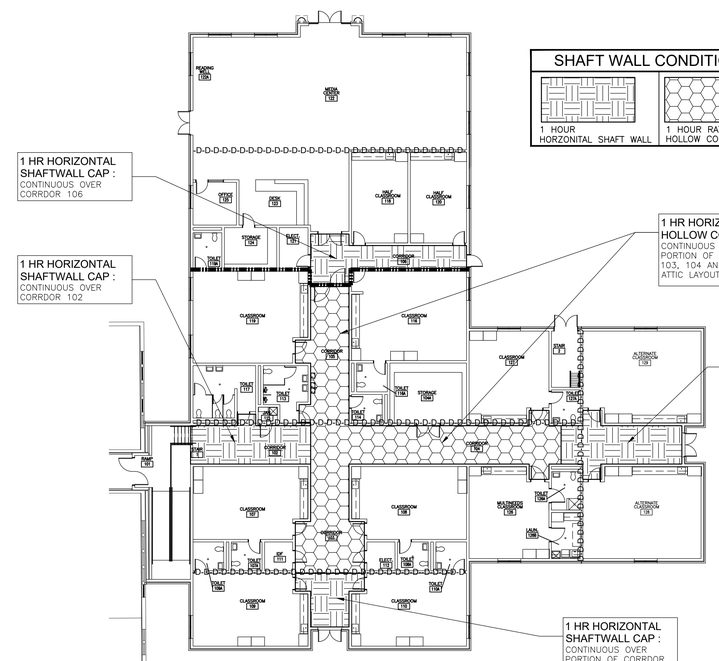

SHAFT WALL CONDITIONS

1 HOUR HORZONITAL SHAFT WALL	1 HOUR RATED HOLLOW CORE SHAFT WALL

2 SHAFT WALL, ATTIC DRAFT STOP, AND HOLLOW CORE CONDITIONS

1/16" = 1'-0"

CHAPTER 29 - PLUMBING SYSTEMS

OCCUPANCY		WATERCLOSETS				LAVATORIES				DRINKING FOUNTAINS		SERVICE SINKS
USE	LOAD	RATIO	MALE	RATIO	FEMALE	RATIO	MALE	RATIO	FEMALE	RATIO	ALL	ALL
A3	52.56	1/125	0.21	1/65	0.40	1/200	0.13	1/200	0.13	1/500	0.11	1.00
B	3.63	1/25 FIRST 50 1/50 REMAINDER EXCEEDING 50.	0.07	1/25 FIRST 50 1/50 REMAINDER EXCEEDING 50.	0.07	1/40 FIRST 80 1/80 EXCED 80.	0.05	1/40 FIRST 80 1/80 EXCED 80.	0.05	1/100	0.04	
E	333.35	1/50	3.33	1/50	3.33	1/50	3.33	1/50	3.33	1/100	3.33	
S1,S2	2.55	1/100	0.01	1/100	0.01	1/100	0.01	1/100	0.01	1/1000	0.00	
REQUIRED TOTALS			3.63		3.82		3.52		3.52		3.48	1.00
PROVIDED TOTALS			7		8		6		7		4	1.00

DOOR/WINDOW RATING LEGEND

- (20) 20 MINUTE DOOR AND FRAME
- (45) 45 MINUTE DOOR AND FRAME
- (60) 60 MINUTE DOOR AND FRAME
- (90) 90 MINUTE DOOR AND FRAME
- (180) 180 MINUTE DOOR AND FRAME
- (SM) SMOKE BARRIER DOOR AND FRAME

WALL TYPE LEGEND

- 1 HR WALL
- 2 HR WALL
- 3 HR WALL
- S-S-S-S-S-S-S-S-S-S- SMOKE WALL
- D-D-D-D-D-D-D-D-D-D-D DRAFT STOP WALL

LIFE SAFETY NOTES

- FEC — FIRE EXTINGUISHER AND CABINET (PROVIDE FIRE RATED CABINETS IN RATED WALLS.)
- FE — FIRE EXTINGUISHER
- FE(K) — K-TYPE FIRE EXTINGUISHER
- ACCESSIBLE
- EXIT
- (320) EXIT CAPACITY
- EXTEND AND KEY ALL RATED WALLS TO SHAFT WALL SYSTEM, AND/OR BOTTOM OF ROOF ASSEMBLY
- STENCIL LABEL ALL RATED WALLS & DRAFT STOPS ABOVE CEILING EACH SIDE @ 20'-0" O.C. MAX.
- ALL RATED DOORS AND FRAMES TO BE LABELED WITH EMBOSSED LABELS INDICATING RATING IN MINUTES
- PROVIDE FOAM FILL INSULATION AS SPECIFIED IN ALL WALLS BETWEEN TOILETS AND CLASSROOMS.
- COORDINATE W/ ELECTRICAL & MECHANICAL AND PROVIDE CONCRETE EQUIPMENT PAD AS REQUIRED
- HE - HORIZONTAL EXIT
- FB - FIRE BARRIER
- FP - FIRE PARTITION
- FW - FIRE WALL

2015 INTERNATIONAL BUILDING CODE RESEARCH

OCCUPANCY CLASSIFICATION:	GROUP E	
TYPE OF CONSTRUCTION :	TYPE IIIB (NS)	
EXISTING BUILDING :	13,881 SQ.FT.	
NEW BUILDING AREA :	15,612 SQ.FT.	
NEW ATTIC AREA :	2,380 SQ.FT.	
TABLE 504.4 ALLOWABLE NUMBER OF STORIES:	ALLOWABLE STORIES: 2	ACTUAL STORIES: 2
TABLE 506.2 ALLOWABLE AREA:	AREA FACTOR: NS	14,500 S.F.
SECTION 506.3.3 FRONTAGE INCREASE :	TYPE IIIB (NS) GROUP E - 14,500 S.F. If=(F/P- .25)W/30 If=(15,523 / 15,608- .25)30 /30 If= .74 14,500X.74 = 10,730 S.F. 10,730 + 14,500 = 25,230 S.F. ALLOWED ACTUAL - 11,285 S.F. TO FIRE WALL	
TABLE 601 AND 602	CONSTRUCTION TYPE:	TYPE IIIB (NS)
	STRUCTURAL FRAME:	0
	BEARING WALLS:	0
	T. 602 EXTERIOR: < 5'	1hr
	≥ 5'< 10'	1hr
	≥ 10'< 30'	0
	≥ 30'	0
	INTERIOR:	0
	NONBEARING WALLS:	
	T. 602 EXTERIOR: < 5'	1hr
	≥ 5'< 10'	1hr
	≥ 10'< 30'	0
	≥ 30'	0
	INTERIOR:	0
	FLOOR CONSTRUCTION:	0
	ROOF CONSTRUCTION:	0
TABLE 1020.1 CORRIDOR FIRE-RESISTANCE RATING PARTITIONS AND OPENING PROTECTIVES	GROUP E UNSPRINKLERED	1

LATHAN ARCHITECTS
LATHAN ▪ BRYANT ▪ CALMA

ADDITION AND RENOVATION FOR
FLOMATON ELEMENTARY SCHOOL
PACKAGE A: MEDIA CENTER AND CLASSROOM ADDITION
1634 POPLAR STREET, FLOMATON, AL 36441
ESCAMBIA COUNTY BOARD OF EDUCATION

STATE OF ALABAMA
No. 3365
RICK N. LATHAN
REGISTERED ARCHITECT

SHEET TITLE:
ALTERNATE LIFE SAFETY PLAN

PROJ. MGR.: R. LATHAN
DRAWN: S. WILSON
DATE: FEBRUARY 18, 2022
REVISIONS
1 ADDENDUM NO.1

JOB NO. 21-04A
SHEET NO:
LS1.2
4 OF 4

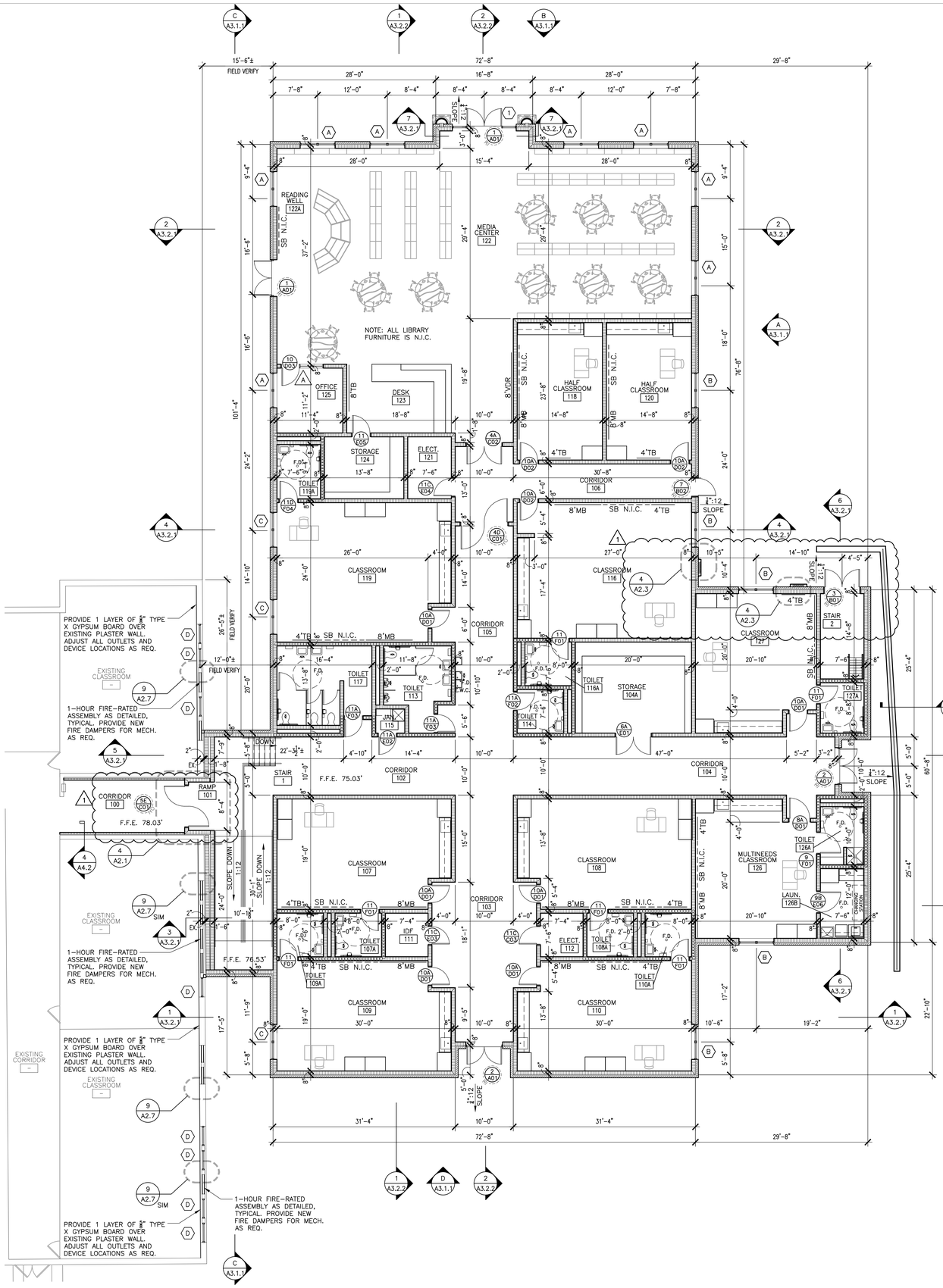

1 CLASSROOM ADDITION FLOOR PLAN

1/8" = 1'-0"

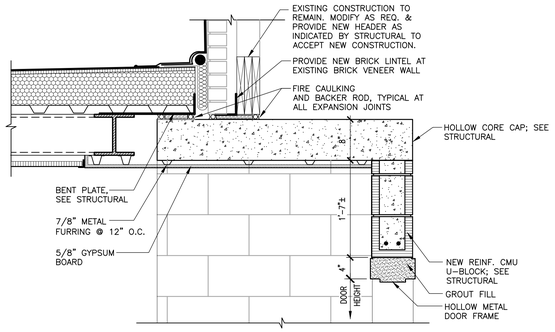

2 PORTAL FRAME DETAIL

1" = 1'-0"

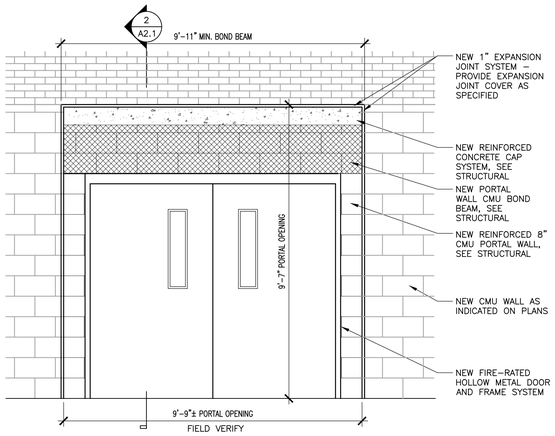

3 PORTAL FRAME ELEVATION

1/2" = 1'-0"

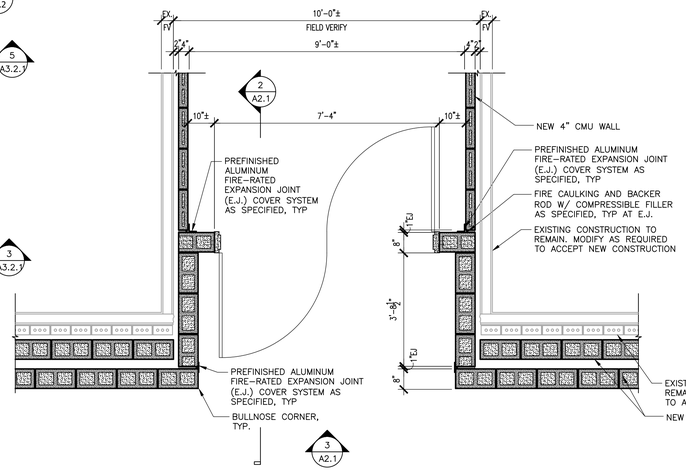

4 PORTAL FRAME ENLARGED PLAN

1/2" = 1'-0"

SYMBOLS LEGEND

1C A — DOOR TYPE, DOOR RATING, HARDWARE SYMBOL, ROUGH-IN FOR FUTURE ACCESS CONTROL	1C A — DOOR TYPE, DOOR RATING, HARDWARE SYMBOL
A A1.1 — ELEV. MARK, SHEET NUMBER	1C A — DOOR TYPE, DOOR RATING, HARDWARE SYMBOL, HOLD OPEN (TIED TO FIRE ALARM)
NEW DOOR AND SWING	1 A1.1 — SECT. MARK, SHEET NUMBER
EWC — ELECTRIC WATER COOLER	10 A5.1 — ELEV. MARK, SHEET NUMBER, INT. ELEVATION
TB — 4' TACK BOARD	A — EXTERIOR WINDOW
MB — MARKER BOARD	1 — STOREFRONT
FEC — RECESSED FIRE EXTINGUISHER CABINET WITH EXTINGUISHER	A — INTERIOR WINDOW
A200 — ROOM NUMBER	AREA OF CONCRETE
EJ — EXPANSION JOINT	F.D. — FLOOR DRAIN
FE — SURFACE MOUNT FIRE EXTINGUISHER	CJ — CONTROL JOINT
+ — INTERIOR FLOOR ELEVATION	N.I.C — NOT IN CONTRACT

DOOR PLACEMENT LEGEND

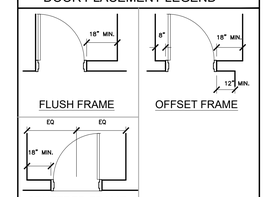

DOOR FIRE RATING LEGEND

DOOR TYPE	(2)	NO RATING
DOOR TYPE + A	(2A)	20 MINUTE RATING
DOOR TYPE + B	(2B)	45 MINUTE RATING
DOOR TYPE + C	(2C)	60 MINUTE RATING
DOOR TYPE + D	(2D)	90 MINUTE RATING
DOOR TYPE + E	(2E)	180 MINUTE RATING

WALL TYPE LEGEND

EXTERIOR WALL	NEW 4" BRICK VENEER W/ AIR SPACE AND RIGID INSULATION ON REINFORCED FOAM FILLED CMU WITH DAMPPROOFING, PROVIDE BRICK WALL TIES @ 16" O.C.
CMU WALL	8" OR 12" CONCRETE MASONRY WALL SEE PLAN FOR WALL WIDTH CHANGES SEE LIFE SAFETY PLAN FOR FIRE RATING
SOUND ATTENUATION PARTITION	8" OR 12" CONCRETE MASONRY WALL WITH SOUND ATTENUATION FOAM FILL
EXISTING	EXISTING TO REMAIN

GENERAL NOTES

- EXTEND AND KEY RATED WALLS TO BOTTOM OF FLOOR STRUCTURE OR ROOF DECK ABOVE. SEE LIFE SAFETY DRAWINGS FOR RATED WALL LOCATIONS.
- COORDINATE W/ ELECTRICAL AND MECHANICAL AND PROVIDE CONCRETE EQUIPMENT PAD AS REQUIRED.
- SEE CIVIL DRAWINGS FOR CONTINUATION OF SIDEWALKS
- ALL PLAN DIMENSIONS ARE TO FACE OF CMU WALL UNLESS NOTED OTHERWISE
- WINDOWS ARE DIMENSIONED TO THE CENTER LINE
- SLOPE ALL SIDEWALKS AWAY FROM THE BUILDING 1/4 : 12
- SLOPE FINISH FLOOR TO FLOOR DRAINS. SEE PLUMBING FOR LOCATIONS OF FLOOR DRAINS.
- SEE ARCHITECTURAL FINISH PLANS AND SPECIFICATIONS FOR AREAS REQUIRING THICKSET OR DEPRESSED FLOORING INSTALLATION. COORDINATE WITH SUBCONTRACTOR AND DROP CONCRETE FLOOR SLAB IN SUCH AREAS AS REQUIRED; PROVIDE SLOPE FOR POSITIVE DRAINAGE IN AREAS WITH FLOOR DRAINAGE SYSTEM.
- SEE ELEVATIONS AND ROOF PLAN FOR DOWNSPOUT LOCATIONS

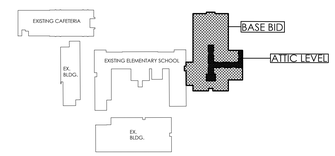

KEY PLAN

1/128" = 1'-0"

LATHAN ARCHITECTS
LATHAN • BRYANT • CALMA

ADDITION AND RENOVATION FOR FLOMATON ELEMENTARY SCHOOL

PACKAGE A: MEDIA CENTER AND CLASSROOM ADDITION
1634 POPLAR STREET, FLOMATON, AL 36441
ESCAMBIA COUNTY BOARD OF EDUCATION

STATE OF ALABAMA
No. 3365
RICK N. LATHAN
REGISTERED ARCHITECT

SHEET TITLE:
BASE BID FLOOR PLAN

PROJ. MGR.:	R. LATHAN
DRAWN:	S. WILSON
DATE:	FEBRUARY 18, 2022
REVISIONS	
1	ADDENDUM NO.1

JOB NO. 21-04A

SHEET NO:

A2.1

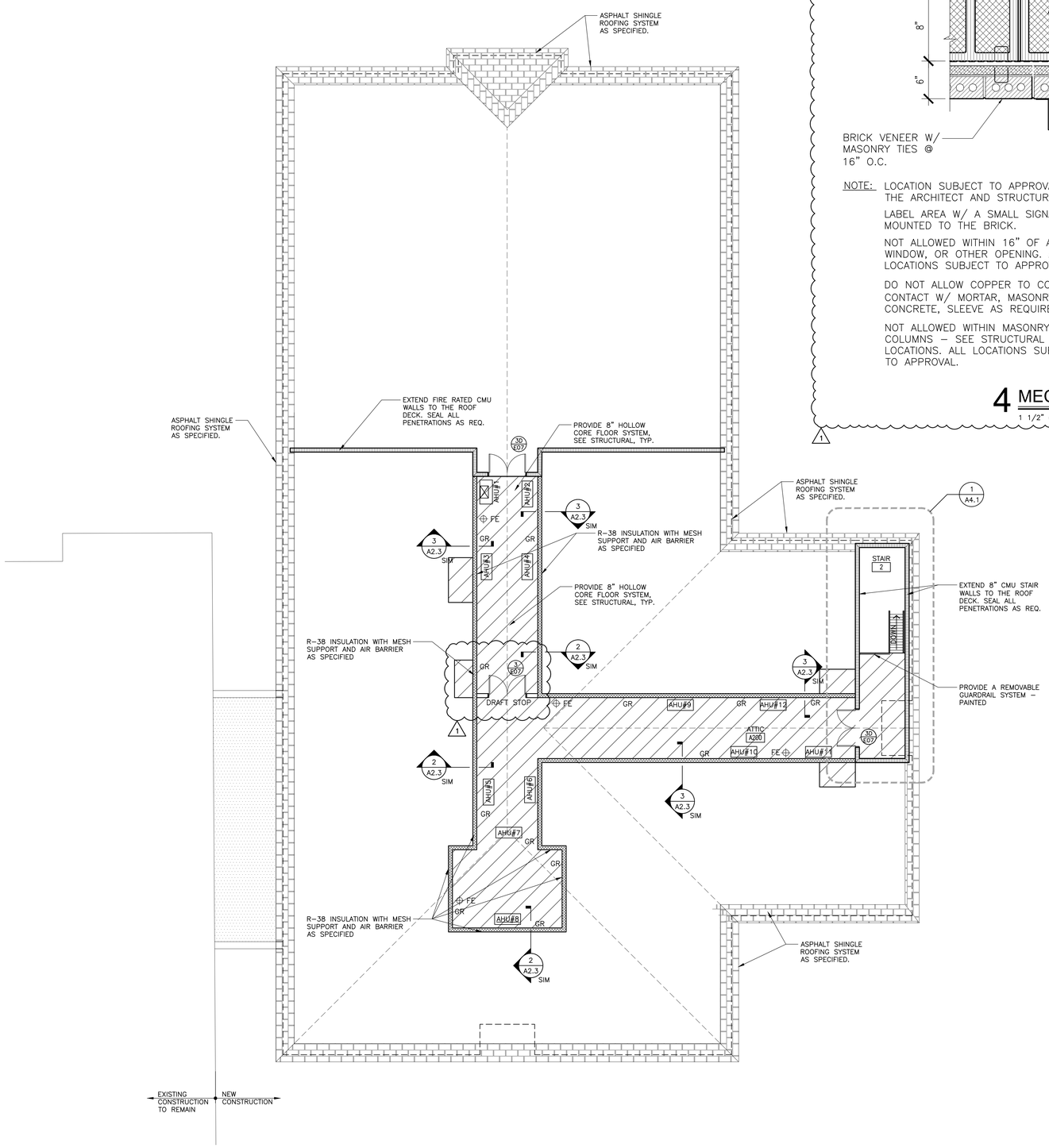

1 ATTIC FLOOR PLAN

1/8" = 1'-0"

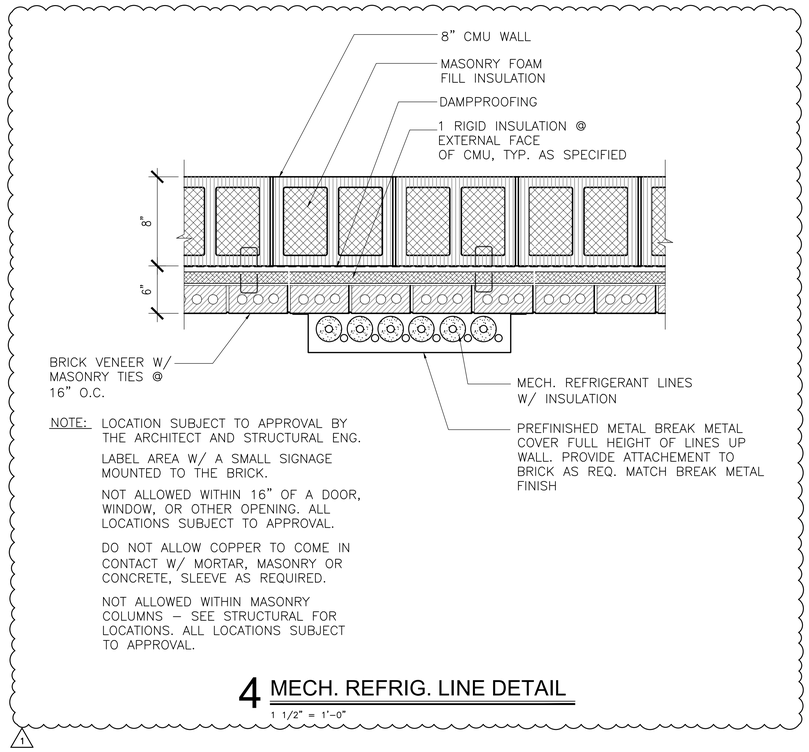

NOTE: LOCATION SUBJECT TO APPROVAL BY THE ARCHITECT AND STRUCTURAL ENG.

LABEL AREA W/ A SMALL SIGNAGE MOUNTED TO THE BRICK.

NOT ALLOWED WITHIN 16" OF A DOOR, WINDOW, OR OTHER OPENING. ALL LOCATIONS SUBJECT TO APPROVAL.

DO NOT ALLOW COPPER TO COME IN CONTACT W/ MORTAR, MASONRY OR CONCRETE, SLEEVE AS REQUIRED.

NOT ALLOWED WITHIN MASONRY COLUMNS – SEE STRUCTURAL FOR LOCATIONS. ALL LOCATIONS SUBJECT TO APPROVAL.

4 MECH. REFRIG. LINE DETAIL

1 1/2" = 1'-0"

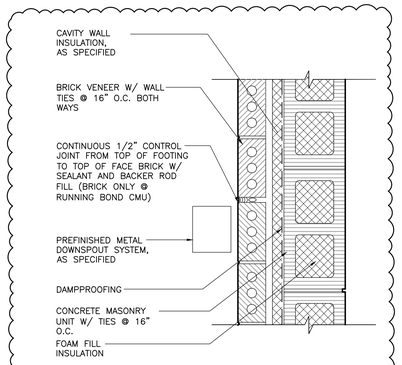

5 BRICK CONTROL JOINT DETAIL

1 1/2" = 1'-0"

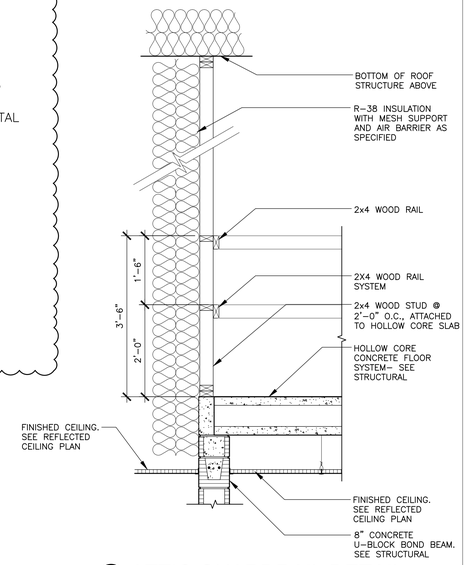

2 ATTIC GUARDRAIL DETAIL

3/4" = 1'-0"

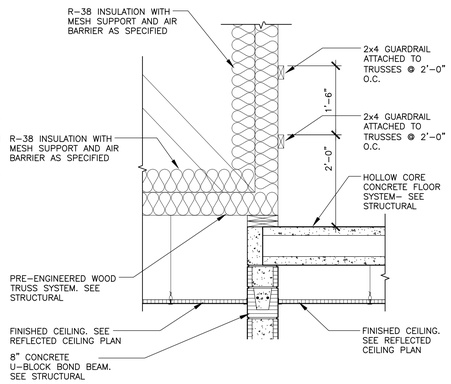

3 ATTIC GUARDRAIL DETAIL

3/4" = 1'-0"

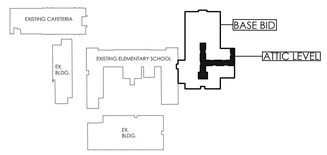

KEY PLAN

1/128" = 1'-0"

ATTIC FLOOR LEGEND

	8" HOLLOW CORE WITHOUT TOPPING SLAB - (NON RATED) TOP OF HOLLOW CORE 14'-0" A.F.F.
	LOW SLOPE ROOFING SYSTEM AS SPECIFIED. SEE ROOF PLAN.
	SHINGLE ROOFING SYSTEM AS SPECIFIED. SEE ROOF PLAN.
	PROVIDE A UL RATED SMOKE BARRIER CAP @ THE BOTTOM OF TRUSSES. SEAL ALL PENETRATIONS AS REQUIRED.
GR	2X4 WOOD GUARDRAIL SYSTEM MECHANICALLY ATTACHED TO TRUSSES.

LATHAN ARCHITECTS
LATHAN ▪ BRYANT ▪ CALMA

ADDITION AND RENOVATION FOR

FLOMATON ELEMENTARY SCHOOL

PACKAGE A: MEDIA CENTER AND CLASSROOM ADDITION
1634 POPLAR STREET, FLOMATON, AL 36441
ESCAMBIA COUNTY BOARD OF EDUCATION

STATE OF ALABAMA
No. 3365
RICK N. LATHAN
REGISTERED ARCHITECT

SHEET TITLE:
ATTIC FLOOR PLAN

PROJ. MGR.:	R. LATHAN
DRAWN:	S. WILSON
DATE:	FEBRUARY 18, 2022
REVISIONS	
1	ADDENDUM NO.1

JOB NO. 21-04A

SHEET NO:

A2.3

6 OF 29

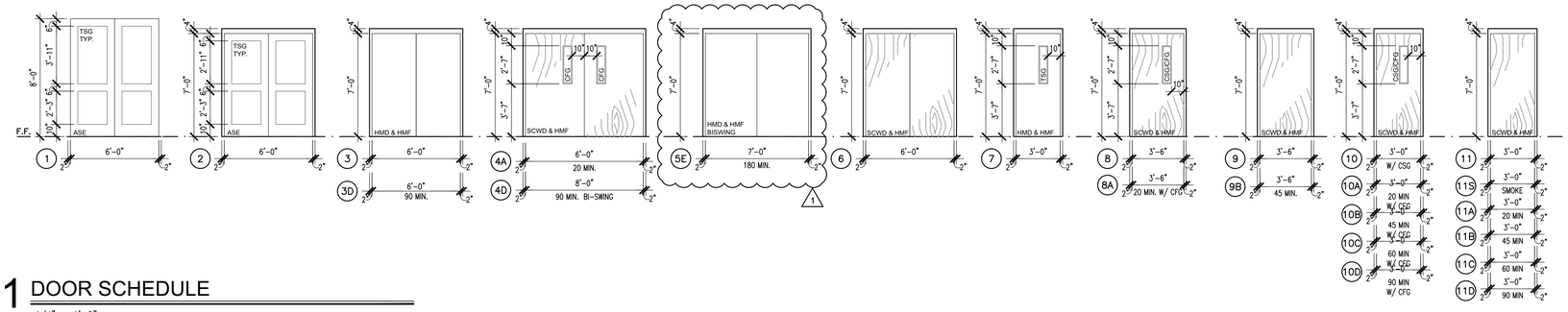

1 DOOR SCHEDULE

1/4" = 1'-0"

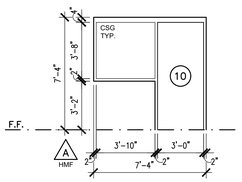

2 HOLLOW METAL SCHEDULE

1/4" = 1'-0"

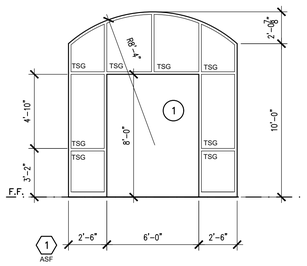

3 ALUMINUM STOREFRONT SCHEDULE

1/4" = 1'-0"

DOOR AND WINDOW LEGEND	
AL	PREFINISHED ALUMINUM LOUVER SYSTEM AS SPECIFIED
CSG	¼" THICK CLEAR TEMPERED SAFETY GLASS.
CFG	CLEAR FIRE RATED SAFETY GLASS AS SPECIFIED.
TSG	1" TINTED INSULATED LOW-E TEMPERED SAFETY GLASS AS SPEC.
TFG	1" TINTED INSULATED LOW-E TEMPERED FIRE RATED SAFETY GLASS AS SPEC.
SCWD	SOLID CORE WOOD DOOR
HMD	HOLLOW METAL DOOR
HMF	HOLLOW METAL FRAME
ASE	PREFINISHED ALUMINUM STOREFRONT ENTRANCE SYSTEM AS SPECIFIED.
ASF	PREFINISHED ALUMINUM STOREFRONT FRAME SYSTEM AS SPECIFIED.
AWF	PREFINISHED ALUMINUM FIXED WINDOW SYSTEM AS SPECIFIED.
AWC	PREFINISHED ALUMINUM CASEMENT WINDOW SYSTEM AS SPECIFIED.
SPSG	1" SPANDREL INSULATED TEMPERED SAFETY GLASS AS SPECIFIED.
HO	HOLD OPENS TIED TO FIRE ALARM SYSTEM
AC	ACCESS CONTROL SYSTEM AS SPECIFIED SEE ALSO ELECT.
RI	ROUGH IN ELECTRICAL FOR FUTURE ACCESS CONTROL SYSTEM AS SPECIFIED SEE ELECT.
FSCW	FIRE RATED STEEL CASEMENT WINDOW SYSTEM AS SPECIFIED.

NOTES:
1. PROVIDE LOW-E GLAZING AT ALL WESTERN, EASTERN, AND SOUTHERN FACING TSG GLAZING.
2. PROVIDE CFG WHERE GLASS IS INDICATED IN RATED DOORS

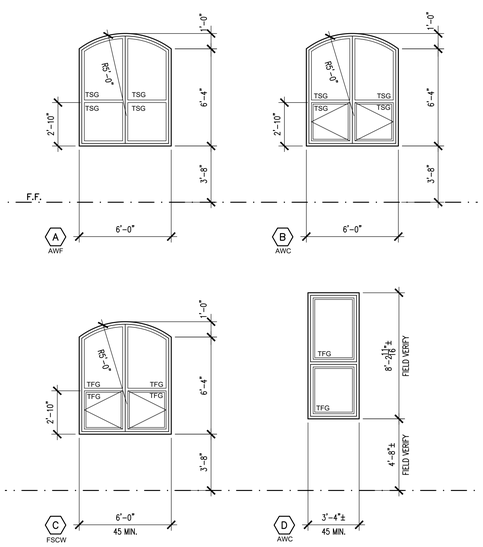

4 ALUMINUM WINDOW SCHEDULE

1/4" = 1'-0"

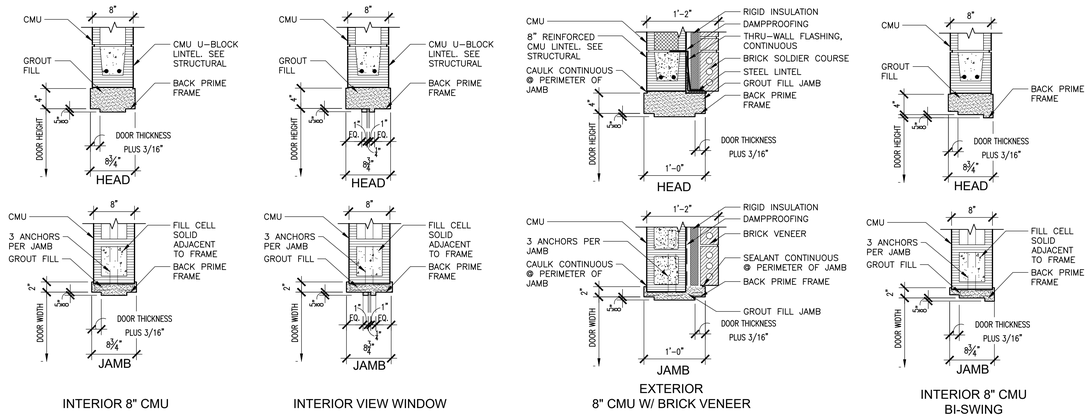

5 TYPICAL HOLLOW METAL DETAILS

1" = 1'-0"

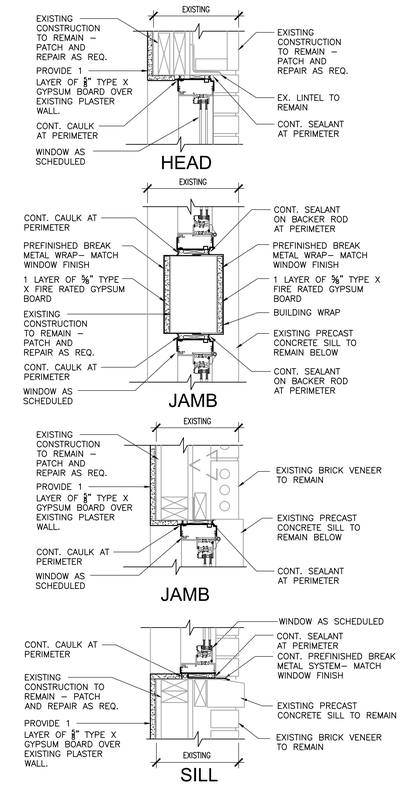

8 EXISTING WINDOW DETAILS

1 1/2" = 1'-0"

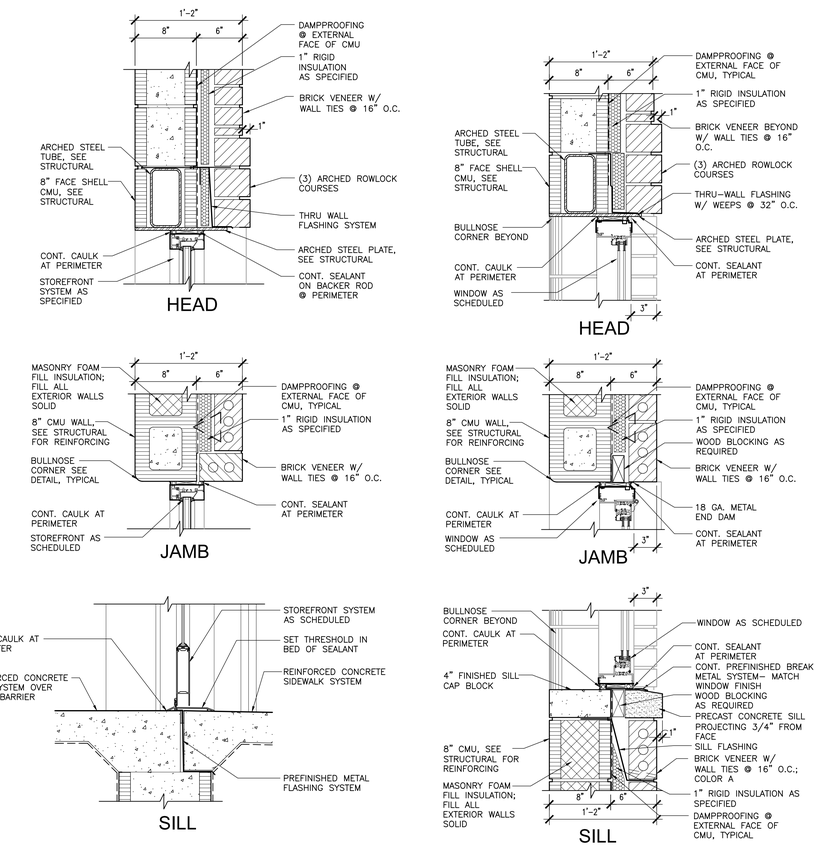

6 TYPICAL STOREFRONT DETAILS

1 1/2" = 1'-0"

7 TYPICAL WINDOW DETAILS

1 1/2" = 1'-0"

9 EXISTING WINDOW DETAILS

1 1/2" = 1'-0"

LATHAN ARCHITECTS
LATHAN ▪ BRYANT ▪ CALMA

ADDITION AND RENOVATION FOR
FLOMATON ELEMENTARY SCHOOL
PACKAGE A: MEDIA CENTER AND CLASSROOM ADDITION
1634 POPLAR STREET, FLOMATON, AL 36441
ESCAMBIA COUNTY BOARD OF EDUCATION

STATE OF ALABAMA
No. 3365
RICK N. LATHAN
REGISTERED ARCHITECT

SHEET TITLE:
DOOR AND WINDOW SCHEDULE AND DETAILS

PROJ. MGR.: R. LATHAN
DRAWN: S. WILSON
DATE: FEBRUARY 18, 2022
REVISIONS
1 ADDENDUM NO.1

JOB NO. 21-04A
SHEET NO:
A2.7
10 OF 29

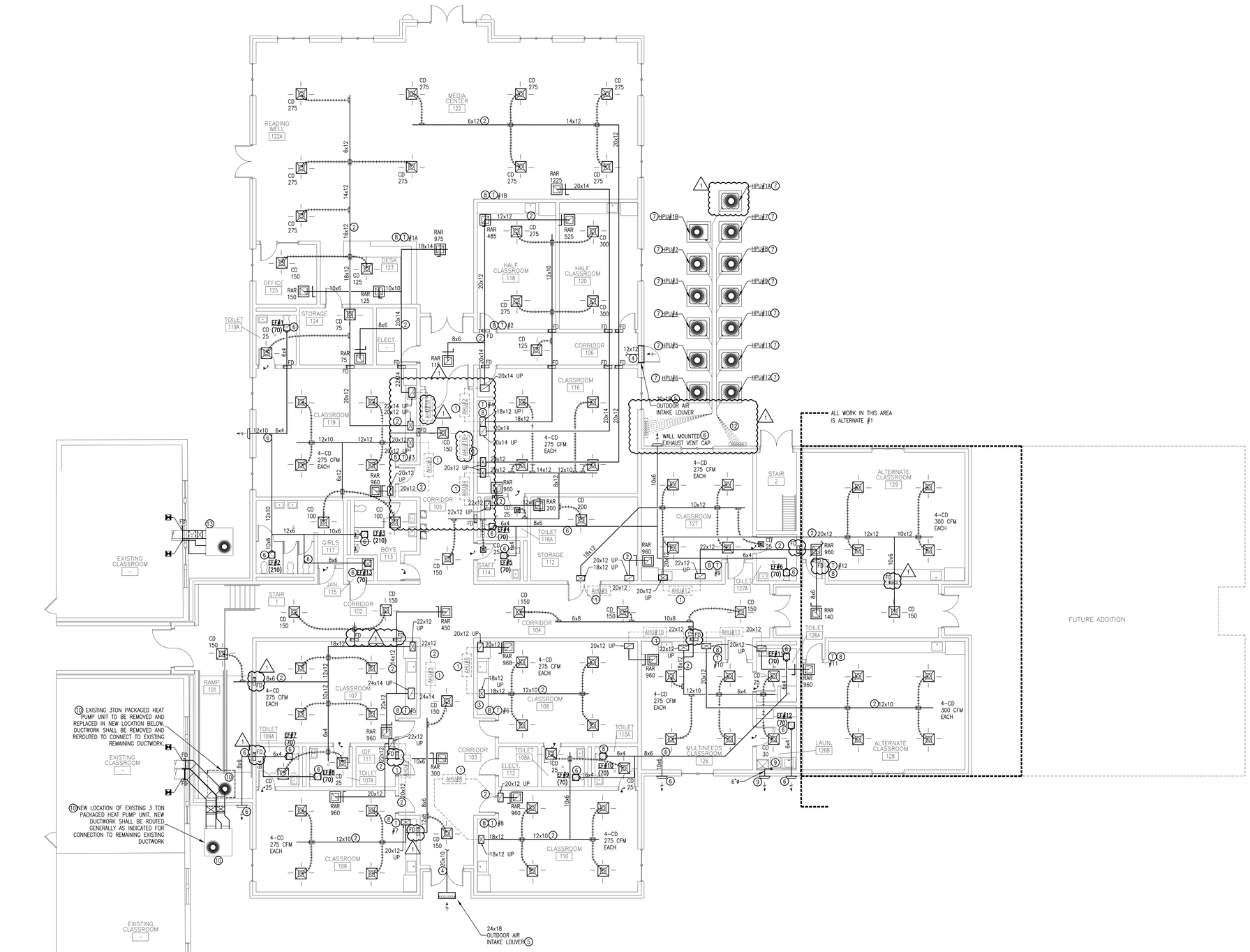

1 MECHANICAL PLAN

1/8" = 1'-0"

HVAC KEY NOTES

1. NEW SPLIT SYSTEM HEAT PUMP EVAPORATOR SECTION MOUNTED IN HORIZONTAL POSITION ON FLOOR OF EQUIPMENT AREA. INCLUDE A FIBERGLASS AUXILARY DRAIN PAN BENEATH UNIT. DRAIN PAN IS TO BE 2 INCHES LARGER THAN UNIT IN ALL DIRECTIONS. EXTEND CONDENSATE DRAIN LINE FROM FULL SIZE OF UNIT OPENING TO NEAREST DRAIN. DRAIN LINE SHALL BE COMPLETELY INSULATED AND SUPPORTED EVERY 48 INCHES. INSTALL FLOAT SWITCH IN P-TRAP OF DRAIN LINE TO AUTOMATICALLY SHUT DOWN UNIT AS DRAINAGE SYSTEM FLOODS. ADDITIONALLY, A FLOAT SWITCH SHALL BE INSTALLED IN THE DRAIN PAN TO AUTOMATICALLY SHUT DOWN UNIT AS DRAIN PAN FLOODS. ELEVATE UNIT IN DRAIN PAN TO ACCOMMODATE INSTALLATION OF CONDENSATE P-TRAP.
2. SUPPLY AND RETURN AIR DUCTWORK SHALL BE EXTENDED FROM FULL SIZE OF UNIT OPENING WITH TRANSITION TO INDICATED DUCT SIZE. ROUTE DUCT SYSTEMS GENERALLY AS INDICATED WITH OFFSETS TO AVOID OBSTRUCTIONS. IT IS INTENDED THE DUCTWORK SHALL BE INSTALLED BETWEEN AND/OR THROUGH THE ROOF JOISTS. RETURN AIR DUCTWORK SHALL BE ROUTED GENERALLY AS INDICATED, UNLESS OTHERWISE NOTED. BRANCH DUCTWORK SHALL BE EXTENDED FROM THE TRUNK DUCT SYSTEMS FOR CONNECTION OF DESIGNATED AIR DEVICES. INCLUDE A MANUAL VOLUME DAMPER IN EACH BRANCH DUCT. BALANCE AIR DEVICE TO INDICATED AIR FLOW QUANTITIES. FIRE DAMPERS SHALL BE INCLUDED WHERE DUCTWORK PASSES THROUGH FIRE RATED WALLS.
4. OUTDOOR AIR INTAKE DUCT SHALL BE EXTENDED UP FROM EACH RETURN AIR DUCT SYSTEM AND OVER FOR CONNECTION TO OUTDOOR AIR INTAKE MANIFOLD. INCLUDE IN VERTICAL RISE OF BRANCH DUCTS A MANUAL VOLUME DAMPER AND MOTORIZED DAMPER. BALANCE MANUAL VOLUME DAMPER TO INDICATED AIR FLOW. THE MOTORIZED DAMPER SHALL BE INTERLOCKED WITH TEMPERATURE CONTROLLER SUCH THAT DAMPER SHALL BE OPEN DURING OCCUPIED HOURS AND CLOSED DURING UNOCCUPIED HOURS.
5. WALL MOUNTED OUTDOOR AIR INTAKE LOUVER SHALL BE WEATHERPROOF AND HURRICANE RATED. POSITION LOUVER IN WALL AS INDICATED ON ARCHITECTURAL PLANS. LOUVER SIZE SHALL BE AS INDICATED ON PLANS. INCLUDE WITH LOUVER INSTALLATION A FULL SIZE PLENUM EXTENDING FOR CONNECTION TO THE OUTDOOR AIR INTAKE MANIFOLD DUCTWORK. ROUTE MANIFOLD GENERALLY AS INDICATED HIGH ABOVE OTHER DUCT SYSTEMS THROUGH AND BETWEEN ROOF JOISTS. COORDINATE CONNECTION OF BRANCH DUCTS TO RETURN AIR SYSTEMS.
6. CEILING MOUNTED EXHAUST FAN WITH DISCHARGE DUCTWORK ROUTED FOR TERMINATION ON EXTERIOR WALL WITH FULL SIZE VENT CAP. EXHAUST FAN IS TO HAVE INTEGRAL BACKDRAFT DAMPER. OPERATION OF FAN SHALL BE AS INDICATED ON SCHEDULE.
7. OUTDOOR HEAT PUMP UNIT MOUNTED ON 4 INCH THICK CONCRETE HOUSEKEEPING PAD. PAD SHALL BE 4 INCHES LARGER THAN UNIT IN ALL DIRECTIONS. BOTTOM OF UNIT SUPPORTS SHALL BE 3 INCHES MINIMUM ABOVE GRADE. SECURE UNIT TO PAD AT EACH CORNER.
8. WALL MOUNTED TEMPERATURE CONTROLLER SHALL BE ELECTRONIC TYPE, SEVEN DAY PROGRAMMABLE WITH OCCUPIED/UNOCCUPIED MODES, AUXILARY EQUIPMENT CONTACTS, MODE SELECTION, AUTOMATIC CHANGE OVER AND BATTERY BACK-UP.
9. CLOTHES DRYER EXHAUST VENT TO EXTEND UP FROM DRYER UP AND OVER FOR TERMINATION ON EXTERIOR WALL.
10. EXISTING OUTDOOR HEAT PUMP UNIT SERVING THE EXISTING CLASSROOM SHALL BE REMOVED AND RELOCATED IN NEW LOCATION. CONTRACTOR TO VERIFY SUPPLY AND RETURN DUCTWORK SIZE AND TO EXTEND NEW DUCTWORK FROM THE NEW LOCATION OF THE UNIT OVER FOR CONNECTION TO THE EXISTING REMAINING DUCTWORK SERVING THE SAME CLASSROOM AREA. INCLUDE IN DUCTWORK NEW FIRE DAMPERS WHERE DUCT PASSES THROUGH NEW FIRE RATED WALL.
11. DUCT MOUNTED SMOKE DETECTOR IN SUPPLY AND RETURN AIR DUCTS. DETECTOR SHALL BE INTERLOCKED WITH FIRE ALARM SYSTEM AND AIR HANDLING UNIT. UPON ACTIVATION OF THE SMOKE DAMPER THE AIR HANDLING UNIT SHALL AUTOMATICALLY SHUT DOWN AND A SIGNAL SENT TO THE FIRE ALARM PANEL.
12. REFRIGERANT PIPING SHALL BE ROUTED OVER TO TURN UP ON EXTERIOR WALL OF BUILDING. PIPING SHALL TURN UP TO ABOVE CEILING ELEVATION AND OVER FOR CONNECTION TO RESPECTIVE AIR HANDLING UNITS MOUNTED ON ATTIC FLOOR. TURN PIPING DOWN FOR CONNECTION TO UNIT. SUPPORT PIPING IN VERTICAL AND HORIZONTAL DIRECTION EVERY 48 INCHES WITH UNISTRUT TYPE SUPPORT SYSTEM. PROVIDE SHEET METAL COVERING FOR REFRIGERANT PIPING ROUTED ON EXTERIOR WALL OF THE BUILDING.
13. EXISTING 3 TON PACKAGED HEAT PUMP UNIT SHALL REMAIN. DUCTWORK SHALL BE DISCONNECTED FROM UNIT UP TO POINT OF DESIGNATION SHOWN ON PLANS TO ALLOW FOR NEW FIRE RATED WALL AND WINDOWS TO BE INSTALLED. CONTRACTOR TO VERIFY EXISTING DUCTWORK SIZE AND ROUTING TO REROUTE NEW DUCTWORK OF SAME SIZE THROUGH THE NEW FIRE RATED WALL WITH NEW FIRE DAMPERS.

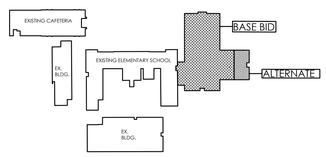

KEY PLAN

1/128" = 1'-0"

H.M. YONGE & ASSOCIATES, INC.
CONSULTING ENGINEERS // EST. 1988
51 EAST GREGORY STREET
PENSACOLA, FLORIDA 32502
PHONE: (850)434-2661
253 ST. ANTHONY STREET
MOBILE, ALABAMA 36603
PHONE: (251)690-7446

LATHAN ARCHITECTS
LATHAN • BRYANT • CALMA

ADDITION AND RENOVATION FOR

FLOMATON ELEMENTARY SCHOOL

PACKAGE A: MEDIA CENTER AND CLASSROOM ADDITION
1634 POPLAR STREET, FLOMATON, AL 36441
ESCAMBIA COUNTY BOARD OF EDUCATION

STATE OF ALABAMA
No. 14948
PROFESSIONAL ENGINEER
03/29/22

SHEET TITLE:
MECHANICAL PLANS

PROJ. MGR.:	H.M. YONGE
DRAWN:	P. VALLEE
DATE:	FEBRUARY 15, 2022
REVISIONS	
1	DCM COMMENTS

JOB NO. 21-04A

SHEET NO:

M1.1

0 1" 2"

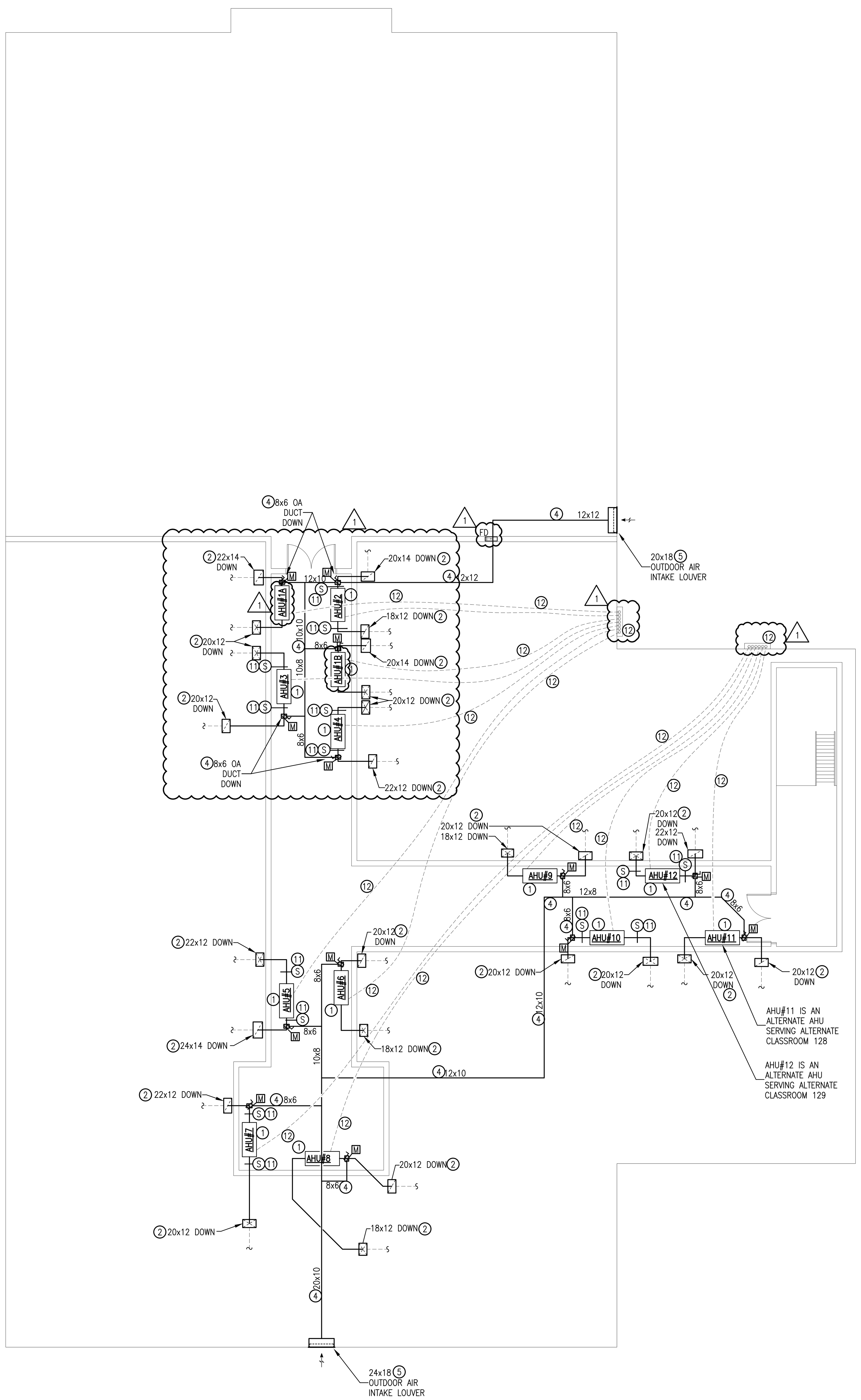

2 MECHANICAL ATTIC PLAN

1/8" = 1'-0"

HVAC KEY NOTES

1. NEW SPLIT SYSTEM HEAT PUMP EVAPORATOR SECTION MOUNTED IN HORIZONTAL POSITION ON FLOOR OF EQUIPMENT AREA. INCLUDE A FIBERGLASS AUXILIARY DRAIN PAN BENEATH UNIT. DRAIN PAN IS TO BE 2 INCHES LARGER THAN UNIT IN ALL DIRECTIONS. EXTEND CONDENSATE DRAIN LINE FROM FULL SIZE OF UNIT OPENING TO NEAREST DRAIN. DRAIN LINE SHALL BE COMPLETELY INSULATED AND SUPPORTED EVERY 48 INCHES. INSTALL FLOAT SWITCH IN P-TRAP OF DRAIN LINE TO AUTOMATICALLY SHUT DOWN UNIT AS DRAINAGE SYSTEM FLOODS. ADDITIONALLY, A FLOAT SWITCH SHALL BE INSTALLED IN THE DRAIN PAN TO AUTOMATICALLY SHUT DOWN UNIT AS DRAIN PAN FLOODS. ELEVATE UNIT IN DRAIN PAN TO ACCOMMODATE INSTALLATION OF CONDENSATE P-TRAP.
2. SUPPLY AND RETURN AIR DUCTWORK SHALL BE EXTENDED FROM FULL SIZE OF UNIT OPENING WITH TRANSITION TO INDICATED DUCT SIZE. ROUTE DUCT SYSTEMS GENERALLY AS INDICATED WITH OFFSETS TO AVOID OBSTRUCTIONS. IT IS INTENDED THE DUCTWORK SHALL BE INSTALLED BETWEEN AND/OR THROUGH THE ROOF JOISTS. RETURN AIR DUCTWORK SHALL BE ROUTED GENERALLY AS INDICATED, UNLESS OTHERWISE NOTED. BRANCH DUCTWORK SHALL BE EXTENDED FROM THE TRUNK DUCT SYSTEMS FOR CONNECTION OF DESIGNATED AIR DEVICES. INCLUDE A MANUAL VOLUME DAMPER IN EACH BRANCH DUCT. BALANCE AIR DEVICE TO INDICATED AIR FLOW QUANTITIES. FIRE DAMPERS SHALL BE INCLUDED WHERE DUCTWORK PASSES THROUGH FIRE RATED WALLS.
4. OUTDOOR AIR INTAKE DUCT SHALL BE EXTENDED UP FROM EACH RETURN AIR DUCT SYSTEM AND OVER FOR CONNECTION TO OUTDOOR AIR INTAKE MANIFOLD. INCLUDE IN VERTICAL RISE OF BRANCH DUCT A MANUAL VOLUME DAMPER AND MOTORIZED DAMPER. BALANCE MANUAL VOLUME DAMPER TO INDICATED AIR FLOW. THE MOTORIZED DAMPER SHALL BE INTERLOCKED WITH TEMPERATURE CONTROLLER SUCH THAT DAMPER SHALL BE OPEN DURING OCCUPIED HOURS AND CLOSED DURING UNOCCUPIED HOURS.
5. WALL MOUNTED OUTDOOR AIR INTAKE LOUVER SHALL BE WEATHERPROOF AND HURRICANE RATED. POSITION LOUVER IN WALL AS INDICATED ON ARCHITECTURAL PLANS. LOUVER SIZE SHALL BE AS INDICATED ON PLANS. INCLUDE WITH LOUVER INSTALLATION A FULL SIZE PLENUM EXTENDING FOR CONNECTION TO THE OUTDOOR AIR INTAKE MANIFOLD DUCTWORK. ROUTE MANIFOLD GENERALLY AS INDICATED HIGH ABOVE OTHER DUCT SYSTEMS THROUGH AND BETWEEN ROOF JOISTS. COORDINATE CONNECTION OF BRANCH DUCTS TO RETURN AIR SYSTEMS.
6. CEILING MOUNTED EXHAUST FAN WITH DISCHARGE DUCTWORK ROUTED FOR TERMINATION ON EXTERIOR WALL WITH FULL SIZE VENT CAP. EXHAUST FAN IS TO HAVE INTEGRAL BACKDRAFT DAMPER. OPERATION OF FAN SHALL BE AS INDICATED ON SCHEDULE.
7. OUTDOOR HEAT PUMP UNIT MOUNTED ON 4 INCH THICK CONCRETE HOUSEKEEPING PAD. PAD SHALL BE 4 INCHES LARGER THAN UNIT IN ALL DIRECTIONS. BOTTOM OF UNIT SUPPORTS SHALL BE 3 INCHES MINIMUM ABOVE GRADE. SECURE UNIT TO PAD AT EACH CORNER.
8. WALL MOUNTED TEMPERATURE CONTROLLER SHALL BE ELECTRONIC TYPE, SEVEN DAY PROGRAMMABLE WITH OCCUPIED/UNOCCUPIED MODES, AUXILIARY EQUIPMENT CONTACTS, MODE SELECTION, AUTOMATIC CHANGE OVER AND BATTERY BACK-UP.
9. CLOTHES DRYER EXHAUST VENT TO EXTEND UP FROM DRYER UP AND OVER FOR TERMINATION ON EXTERIOR WALL.
10. EXISTING OUTDOOR HEAT PUMP UNIT SERVING THE EXISTING CLASSROOM SHALL BE REMOVED AND RELOCATED IN NEW LOCATION. CONTRACTOR TO VERIFY SUPPLY AND RETURN DUCTWORK SIZE AND TO EXTEND NEW DUCTWORK FROM THE NEW LOCATION OF THE UNIT OVER FOR CONNECTION TO THE EXISTING REMAINING DUCTWORK SERVING THE SAME CLASSROOM AREA. INCLUDE IN DUCTWORK NEW FIRE DAMPERS WHERE DUCT PASSES THROUGH NEW FIRE RATED WALL.
11. DUCT MOUNTED SMOKE DETECTOR IN SUPPLY AND RETURN AIR DUCTS. DETECTOR SHALL BE INTERLOCKED WITH FIRE ALARM SYSTEM AND AIR HANDLING UNIT. UPON ACTIVATION OF THE SMOKE DAMPER THE AIR HANDLING UNIT SHALL AUTOMATICALLY SHUT DOWN AND A SIGNAL SENT TO THE FIRE ALARM PANEL.
12. REFRIGERANT PIPING SHALL BE ROUTED OVER TO TURN UP ON EXTERIOR WALL OF BUILDING. PIPING SHALL TURN UP TO ABOVE CEILING ELEVATION AND OVER FOR CONNECTION TO RESPECTIVE AIR HANDLING UNITS MOUNTED ON ATTIC FLOOR. TURN PIPING DOWN FOR CONNECTION TO UNIT. SUPPORT PIPING IN VERTICAL AND HORIZONTAL DIRECTION EVERY 48 INCHES WITH UNISTRUT TYPE SUPPORT SYSTEM. PROVIDE SHEET METAL COVERING FOR REFRIGERANT PIPING ROUTED ON EXTERIOR WALL OF THE BUILDING.
13. EXISTING PACKAGED HEAT PUMP UNIT SHALL REMAIN. DUCTWORK SHALL BE DISCONNECTED FROM UNIT UP TO POINT OF DESIGNATION SHOWN ON PLANS TO ALLOW FOR NEW FIRE RATED WALL AND WINDOWS TO BE INSTALLED. CONTRACTOR TO VERIFY EXISTING DUCTWORK SIZE AND ROUTING TO REROUTE NEW DUCTWORK OF SAME SIZE THROUGH THE NEW FIRE RATED WALL WITH NEW FIRE DAMPERS.

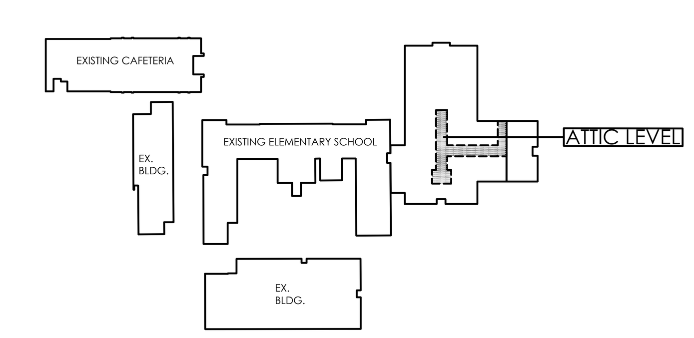

KEY PLAN

1/128" = 1'-0"

H.M. YONGE & ASSOCIATES, INC.
CONSULTING ENGINEERS // EST. 1988
51 EAST GREGORY STREET
PENSACOLA, FLORIDA 32502
PHONE: (850)434-2661
253 ST. ANTHONY STREET
MOBILE, ALABAMA 36603
PHONE: (251)690-7446

LATHAN ARCHITECTS
LATHAN • BRYANT • CALMA

ADDITION AND RENOVATION FOR
FLOMATON ELEMENTARY SCHOOL
PACKAGE A: MEDIA CENTER AND CLASSROOM ADDITION
1634 POPLAR STREET, FLOMATON, AL 36441
ESCAMBIA COUNTY BOARD OF EDUCATION

SHEET TITLE:
MECHANICAL ATTIC PLAN

PROJ. MGR.:	H.M. YONGE
DRAWN:	P. VALLEE
DATE:	FEBRUARY 15, 2022
REVISIONS	
1	DCM COMMENTS

JOB NO. 21-04A

SHEET NO:
M1.2

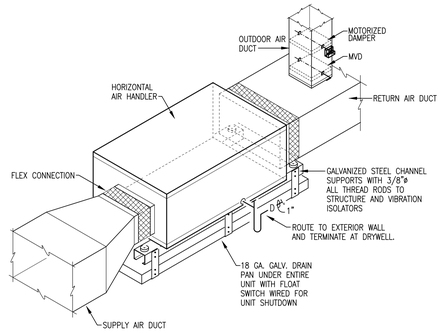

TYPICAL HORIZONTAL AHU DETAIL

NOT TO SCALE

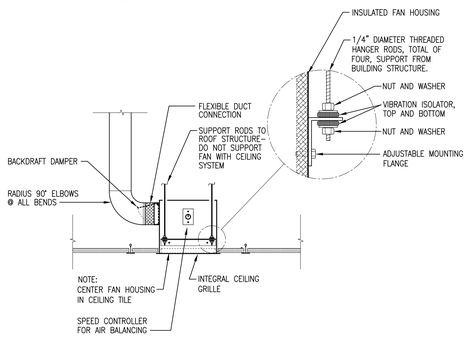

CEILING EXHAUST FAN DETAIL

NOT TO SCALE

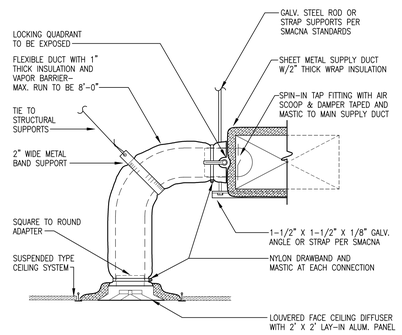

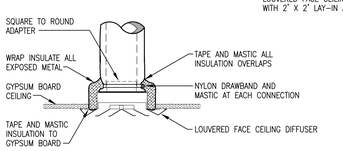

TYPICAL CEILING DIFFUSER DETAIL

NOT TO SCALE

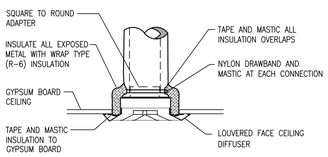

TYPICAL SURFACE MOUNTED CEILING DIFFUSER DETAIL

NOT TO SCALE

SPLIT SYSTEM AIR TO AIR HEAT PUMP UNIT SCHEDULE

MARK AHU/ HPU#	AREA SERVED	AHU DATA									ELECTRIC HEAT DATA			COOLING CAPACITY @ ARI STANDARD CONDITIONS					HEATING CAPACITY @ ARI STANDARD CONDITIONS			MIN. SEER	COMPR. RLA	OUTDOOR FAN FLA	HEAT PUMP ELECTRICAL DATA					REMARKS
		UNIT TONNAGE	TOTAL CFM	OA CFM	ESP	MOTOR HP	VOLTS	Hz	PHASE	HEAT STAGES	KW	MCA	MOCP	EDB °F	EWB °F	AMBIENT °F	TOTAL BTU/HR	SENSIBLE BTU/HR	EDB °F	AMBIENT °F	TOTAL BTU/HR				VOLTS	Hz	PHASE	MCA	MOCP	
1A	MEDIA CENTER	4.0	1475	150	0.5"	3/4	208	60	3	1	14.2	45	45	80	67	95	48,000	34,000	70	47	29,000	14.0	13.7	1.1	208	60	3	18	30	1 2 3 4 5
1B	MEDIA CENTER	4.0	1325	150	0.5"	3/4	208	60	3	1	14.2	45	45	80	67	95	48,000	34,000	70	47	29,000	14.0	13.7	1.1	208	60	3	18	30	1 2 3 4 5
2	CLASSROOM	3.5	1275	150	0.5"	3/4	208	60	3	1	10.8	44	45	80	67	95	42,000	31,000	70	47	26,500	14.0	13.5	1.1	208	60	3	18	30	1 2 3 4 5
3	CLASSROOM	4.0	1450	150	0.5"	3/4	208	60	3	1	14.2	45	45	80	67	95	48,000	34,000	70	47	29,000	14.0	13.7	1.1	208	60	3	18	30	1 2 3 4 5
4	CLASSROOM	4.0	1500	150	0.5"	3/4	208	60	3	1	14.2	45	45	80	67	95	48,000	34,000	70	47	29,000	14.0	13.7	1.1	208	60	3	18	30	1 2 3 4 5
5	CLASSROOM	5.0	1600	175	0.5"	3/4	208	60	3	1	14.2	45	45	80	67	95	53,900	44,000	70	47	35,600	14.0	15.9	1.1	208	60	3	21	35	1 2 3 4 5
6	CLASSROOM	3.0	1100	140	0.5"	1/2	208	60	3	1	7.2	30	30	80	67	95	36,000	27,000	70	47	21,000	14.0	9.9	0.8	208	60	3	13	20	1 2 3 4 5
7	CLASSROOM	4.0	1400	150	0.5"	3/4	208	60	3	1	14.2	45	45	80	67	95	48,000	34,000	70	47	29,000	14.0	13.7	1.1	208	60	3	18	30	1 2 3 4 5
8	CLASSROOM	3.0	1150	140	0.5"	1/2	208	60	3	1	7.2	30	30	80	67	95	36,000	27,000	70	47	21,000	14.0	9.9	0.8	208	60	3	13	20	1 2 3 4 5
9	CLASSROOM	3.0	1125	140	0.5"	1/2	208	60	3	1	7.2	30	30	80	67	95	36,000	27,000	70	47	21,000	14.0	9.9	0.8	208	60	3	13	20	1 2 3 4 5
10	CLASSROOM	5.0	1605	175	0.5"	3/4	208	60	3	1	14.2	45	45	80	67	95	53,900	44,000	70	47	35,600	14.0	15.9	1.1	208	60	3	21	35	1 2 3 4 5
11	ALTERNATE CLASSROOM	3.5	1200	140	0.5"	3/4	208	60	3	1	10.8	44	45	80	67	95	42,000	31,000	70	47	26,500	14.0	13.5	1.1	208	60	3	18	30	1 2 3 4 5
12	ALTERNATE CLASSROOM	3.5	1350	150	0.5"	3/4	208	60	3	1	10.8	44	45	80	67	95	42,000	31,000	70	47	26,500	14.0	13.5	1.1	208	60	3	18	30	1 2 3 4 5

NOTES:

1. THE HEAT PUMP SHALL OPERATE AS STAGE 1 HEATING. THE ELECTRIC STRIP HEAT SHALL OPERATE AS STAGE 2 HEATING AND DEFROST CYCLE. DURING STAGE 2 HEATING, THE COMPRESSOR AND THE ELECTRIC STRIP HEAT SHALL OPERATE SIMULTANEOUSLY.
2. PROVIDE SINGLE POINT POWER CONNECTION FOR AIR HANDLING UNIT BLOWER AND STRIP HEAT.
3. PROVIDE AIR HANDLING UNIT WITH BO-POLAR IONIZATION DEVICE FOR AIR PURIFICATION.
4. DUCT MOUNTED SMOKE DETECTORS TO BE INCLUDED IN SUPPLY AND RETURN AIR DUCTWORK. INSTALLATION SHALL BE PER MANUFACTURER'S WRITTEN INSTRUCTIONS.
5. BASIS OF DESIGN: TRANE MODELS – 4TWA AND TEM4 SERIES.

AIR DEVICE SCHEDULE

MARK	CFM	MAX. NC	AIR DEVICE SIZE	DUCT CONNECTION SIZE	REMARKS (TYPE)
0–75	0–75	25	6"x6"	6"ø	CD
76–150	76–150	25	9"x6"	7"ø	CD
151–200	151–200	25	9"x9"	8"ø	CD
201–300	201–300	25	9"X9"	10"ø	CD
---	---	---	---	---	---
101–200	101–200	25	12"x6"	SEE PLANS	SWR
201–400	201–400	25	14"x6"	SEE PLANS	SWR
---	---	---	---	---	---
1–300	1–300	25	8"x8"	SEE PLANS	RAR
301–550	301–550	25	12"x12"	SEE PLANS	RAR
550–999	550–999	25	18"x18"	SEE PLANS	RAR
1000–2000	1000–2000	25	24"x24"	SEE PLANS	RAR

NOTES:

1. PROVIDE 24"x24" PANEL FOR ALL AIR DEVICES IN LAY-IN CEILING.
2. PROVIDE DUCT CONNECTION SIZE SHOWN UNLESS OTHERWISE NOTED ON PLANS.

FAN SCHEDULE

MARK	TOTAL CFM	TSP IN WC	MAX RPM	TYPE DRIVE	TYPE FAN	INTERLOCK WITH	MOTOR HP/WATTS	MAX SONES	ELECTRICAL DATA			FAN SERVICE	REMARKS
									VOLTS	Hz	PHASE		
EF#1	70	0.5	777	DIRECT	CEILING MOUNTED	LIGHT SWITCH	80 W	2.0	115	60	1	TOILET	1 2 3 4 5
EF#2	210	0.5	980	DIRECT	CEILING MOUNTED	LIGHT SWITCH	172 W	4.5	115	60	1	GIRLS RR	1 2 3 4 5
EF#3	210	0.5	980	DIRECT	CEILING MOUNTED	LIGHT SWITCH	172 W	4.5	115	60	1	BOYS RR	1 2 3 4 5
EF#4	70	0.5	777	DIRECT	CEILING MOUNTED	LIGHT SWITCH	80 W	2.0	115	60	1	TOILET	1 2 3 4 5
EF#5	70	0.5	777	DIRECT	CEILING MOUNTED	LIGHT SWITCH	80 W	2.0	115	60	1	STAFF	1 2 3 4 5
EF#6	70	0.5	777	DIRECT	CEILING MOUNTED	LIGHT SWITCH	80 W	2.0	115	60	1	TOILET	1 2 3 4 5
EF#7	70	0.5	777	DIRECT	CEILING MOUNTED	LIGHT SWITCH	80 W	2.0	115	60	1	TOILET	1 2 3 4 5
EF#8	70	0.5	777	DIRECT	CEILING MOUNTED	LIGHT SWITCH	80 W	2.0	115	60	1	TOILET	1 2 3 4 5
EF#9	70	0.5	777	DIRECT	CEILING MOUNTED	LIGHT SWITCH	80 W	2.0	115	60	1	TOILET	1 2 3 4 5
EF#10	70	0.5	777	DIRECT	CEILING MOUNTED	LIGHT SWITCH	80 W	2.0	115	60	1	TOILET	1 2 3 4 5
EF#11	70	0.5	777	DIRECT	CEILING MOUNTED	LIGHT SWITCH	80 W	2.0	115	60	1	TOILET	1 2 3 4 5
EF#12	70	0.5	777	DIRECT	CEILING MOUNTED	LIGHT SWITCH	80 W	2.0	115	60	1	LAUNDRY	1 2 3 4 5
EF#13	70	0.5	777	DIRECT	CEILING MOUNTED	LIGHT SWITCH	80 W	2.0	115	60	1	JANITORS	1 2 3 4 5

NOTES:

1. PROVIDE WITH FAN SPEED CONTROLLER, CONTROLLER SHALL BE MOUNTED TO FAN.
2. PROVIDE WITH ALUMINUM GRILLE. PLASTIC GRILLES SHALL NOT BE ACCEPTABLE
3. PROVIDE WITH INTEGRAL BACKDRAFT DAMPER.
4. PROVIDE WITH INTEGRAL DISCONNECT.
5. PROVIDE WITH THERMAL OVERLOAD.

OUTSIDE AIR VENTILATION RATES
IAQ PROCEDURE – 2015 IMC

ZONE TAG	FACILITY TYPE	ZONE USE	ZONE FLOOR AREA (SF) Az	ZONE MAX OCCUPANCY Rp	TABLE 6.1 OA/person (Rp)	TABLE 6.1 cfm/ft2 (Ra)	Pz*Rp	Az*Ra	TABLE 6.2 VENTILATION EFF. (Ez)	ZONE OA (CFM)
AHU#1A,B MEDIA CENTER	EDUCATIONAL	MEDIA CENTER	2750	60	10.0	0.12	600	330	0.8	1163 3

ZONE HEIGHT (FT)	10	AIR CHANGES/HOUR	6.2		
DESIRED OA – IAQ	300	OA PER VRP 3	1163 CFM	VRP OA CFM/PERSON	19.4
SUPPLY AIR FULL (Vs)	2850	OA PER IAQ 1	300 CFM	IAQ OA CFM/PERSON	5.0
RETURN AIR (Vr)	2550	OA SAVINGS	863 CFM		
RECIRC. FLOW FACTOR(R)	0.89				
VENT. EFF. (Ez)	0.8	OA DRY BULB	95 °F		
PHYSICAL ACTIVITY	STANDING (DESK WORK)	OA WET BULB	78 °F		
FILTER LOCATION	B	COIL LVG. DRY BULB	55.0 °F		
HVAC FLOW TYPE	CONSTANT	COIL LVG. WET BULB	53.0 °F		
OA FLOW TYPE	CONSTANT				

CONTAMINANT OF CONCERN	CONTAMINANT SOURCE	MAXIMUM THRESHOLD VALUE (PPM)	STEADY STATE USING VRP	STEADY STATE USING IAQ	STEADY STATE LEVEL OK @ REDUCED OA?
ACETALDEHYDE	PEOPLE	100	0.01112	0.00108	YES
ACETONE	PEOPLE	250	0.00168	0.00043	YES
AMMONIA	PEOPLE	25	0.01557	0.01038	YES
BENZENE	PEOPLE	1.0	0.00252	0.00025	YES
2-BUTANONE (MEK)	PEOPLE	200	0.00019	0.00007	YES
CARBON DIOXIDE	PEOPLE	5000	1019	2802	YES
CHLOROFORM	PEOPLE	2.0	0.00011	0.00001	YES
DIOXANE	PEOPLE	100	0	0	YES
HYDROGEN SULFIDE	PEOPLE	10	0	0	YES
METHANE	PEOPLE	N/A	1.68094	1.68094	YES
METHANOL	PEOPLE	200	0	0	YES
METHYLENE CHLORIDE	PEOPLE	25	0.00077	0.00012	YES
PROPANE	PEOPLE	1000	0.00998	0.00998	YES
TETRACHLOROETHANE	PEOPLE	5	0	0	YES
TETRACHLOROETHYLENE	PEOPLE	100	0.00037	0.00004	YES
TOLUENE	PEOPLE	100	0.00533	0.00052	YES
TRICHLOROETHANE	PEOPLE	350	0.00077	0.00010	YES
XYLENE	PEOPLE	100	0.00230	0.00022	YES
			IS IAQ ACCEPTABLE AT REDUCED OA LEVELS?		YES

NOTES:

1. IAQ PROCEDURE IN ACCORDANCE WITH THE ENGINEERED EXCEPTION FOUND IN 2015 IMC, SECTION 403.2 AND IN ACCORDANCE WITH ASHRAE 62.1-2013, SECTION 6.1.2 & 6.3 BY UTILIZING BIPOLAR IONIZATION TECHNOLOGY.
2. ALL VALUES LISTED IN PARTS PER MILLION (PPM), UNLESS OTHERWISE NOTED.
3. OUTSIDE AIR REQUIRED PER VENTILATION RATE PROCEDURE (VRP).

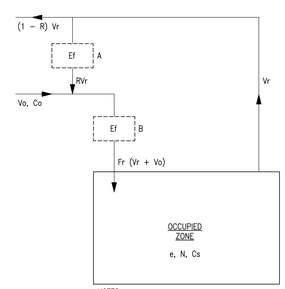

NOTES:

ASHRAE 62.1-2013 (APPENDIX D) VENTILATION SYSTEM SCHEMATIC FOR MASS BALANCE EQUATIONS FOR USE WITH THE IAQ PROCEDURE.

QUANTITIES

A, B	FILTER LOCATION
V	VOLUMETRIC FLOW
C	CONTAMINANT CONCENTRATION
e	AIR CHANGE EFFECTIVENESS
Ef	FILTER EFFICIENCY
Fr	FLOW REDUCTION FACTOR
N	CONTAMINANT GENERATION RATE
R	RECIRCULATION FLOW FACTOR

SUBSCRIPTS

o	OUTDOOR
r	RETURN
s	SPACE

OUTSIDE AIR VENTILATION RATES
IAQ PROCEDURE – 2015 IMC

ZONE TAG	FACILITY TYPE	ZONE USE	ZONE FLOOR AREA (SF) Az	ZONE MAX OCCUPANCY Rp	TABLE 6.1 OA/person (Rp)	TABLE 6.1 cfm/ft2 (Ra)	Pz*Rp	Az*Ra	TABLE 6.2 VENTILATION EFF. (Ez)	ZONE OA (CFM)
CLASSROOMS	EDUCATIONAL	CLASSROOMS (9+)	700	30	10.0	0.12	300	84	0.8	480 3

ZONE HEIGHT (FT)	9	AIR CHANGES/HOUR	10.5		
DESIRED OA – IAQ	300	OA PER VRP 3	480 CFM	VRP OA CFM/PERSON	16.0
SUPPLY AIR FULL (Vs)	1100	OA PER IAQ 1	140 CFM	IAQ OA CFM/PERSON	4.7
RETURN AIR (Vr)	960	OA SAVINGS	340 CFM		
RECIRC. FLOW FACTOR(R)	0.88				
VENT. EFF. (Ez)	0.8	OA DRY BULB	95 °F		
PHYSICAL ACTIVITY	STANDING (DESK WORK)	OA WET BULB	78 °F		
FILTER LOCATION	B	COIL LVG. DRY BULB	55.0 °F		
HVAC FLOW TYPE	CONSTANT	COIL LVG. WET BULB	53.0 °F		
OA FLOW TYPE	CONSTANT				

CONTAMINANT OF CONCERN	CONTAMINANT SOURCE	MAXIMUM THRESHOLD VALUE (PPM)	STEADY STATE USING VRP	STEADY STATE USING IAQ	STEADY STATE LEVEL OK @ REDUCED OA?
ACETALDEHYDE	PEOPLE	100	0.01113	0.00123	YES
ACETONE	PEOPLE	250	0.00177	0.00052	YES
AMMONIA	PEOPLE	25	0.01844	0.01266	YES
BENZENE	PEOPLE	1.0	0.00252	0.00028	YES
2-BUTANONE (MEK)	PEOPLE	200	0.00021	0.00009	YES
CARBON DIOXIDE	PEOPLE	5000	1148	2973	YES
CHLOROFORM	PEOPLE	2.0	0.00011	0.00001	YES
DIOXANE	PEOPLE	100	0	0	YES
HYDROGEN SULFIDE	PEOPLE	10	0	0	YES
METHANE	PEOPLE	N/A	1.68094	1.68094	YES
METHANOL	PEOPLE	200	0	0	YES
METHYLENE CHLORIDE	PEOPLE	25	0.00079	0.00015	YES
PROPANE	PEOPLE	1000	0.00998	0.00998	YES
TETRACHLOROETHANE	PEOPLE	5	0	0	YES
TETRACHLOROETHYLENE	PEOPLE	100	0.00037	0.00004	YES
TOLUENE	PEOPLE	100	0.00533	0.00059	YES
TRICHLOROETHANE	PEOPLE	350	0.00078	0.00011	YES
XYLENE	PEOPLE	100	0.00230	0.00025	YES
			IS IAQ ACCEPTABLE AT REDUCED OA LEVELS?		YES

NOTES:

1. IAQ PROCEDURE IN ACCORDANCE WITH THE ENGINEERED EXCEPTION FOUND IN 2015 IMC, SECTION 403.2 AND IN ACCORDANCE WITH ASHRAE 62.1-2013, SECTION 6.1.2 & 6.3 BY UTILIZING BIPOLAR IONIZATION TECHNOLOGY.
2. ALL VALUES LISTED IN PARTS PER MILLION (PPM), UNLESS OTHERWISE NOTED.
3. OUTSIDE AIR REQUIRED PER VENTILATION RATE PROCEDURE (VRP).

MECHANICAL LEGEND

AFF	ABOVE FINISHED FLOOR
AHU	AIR HANDLING UNIT
CD	CEILING DIFFUSER
CFM	CUBIC FEET PER MINUTE
EF	EXHAUST FAN
FD	FIRE DAMPER
MVD	MANUAL VOLUME DAMPER
OA	OUTDOOR AIR
RA	RETURN AIR
RAR	RETURN AIR REGISTER
SA	SUPPLY AIR
SWR	SIDEWALL REGISTER
TG	TRANSFER GRILLE
TYP	TYPICAL
	CEILING DIFFUSER WITH THROW INDICATION
	EXHAUST/RETURN AIR DEVICE
W X H	DUCTWORK (DIMENSIONS: WIDTH X HEIGHT)
W X H W X H	FLEX DUCT TAKE-OFF WITH AIR-SCOOP, SPIN-IN TAP AND BALANCING DAMPER
	ELBOW WITH TURNING VANES
	BULLHEAD TEE WITH TURNING VANES AND SPLITTER DAMPER
	45° SHOE-FITTING TAKE-OFF
	DUCT CONNECTION OVER AIR DEVICE
	RETURN AIR DUCT IN SECTION
	SUPPLY AIR DUCT IN SECTION
S	DUCT MOUNTED SMOKE DETECTOR
M	MOTORIZED DAMPER
T#	THERMOSTAT WITH EQUIPMENT # SERVED MOUNT 48" A.F.F.
	MANUAL VOLUME DAMPER
	5/8" DOOR UNDERCUT
Ø	SPIRAL (ROUND) DUCT
	FLAT OVAL DUCT

LATHAN ARCHITECTS
LATHAN • BRYANT • CALMA

ADDITION AND RENOVATION FOR
FLOMATON ELEMENTARY SCHOOL
PACKAGE A: MEDIA CENTER AND CLASSROOM ADDITION
1634 POPLAR STREET, FLOMATON, AL 36441
ESCAMBIA COUNTY BOARD OF EDUCATION

SHEET TITLE:
MECHANICAL LEGEND
SCHEDULES AND DETAILS

PROJ. MGR.: H.M. YONGE
DRAWN: P. VALLEE
DATE: FEBRUARY 15, 2022

REVISIONS

1	DCM COMMENTS

JOB NO. 21-04A

SHEET NO:

M2.1

H.M. YONGE & ASSOCIATES, INC.
CONSULTING ENGINEERS // EST. 1988
51 EAST GREGORY STREET
PENSACOLA, FLORIDA 32502
PHONE: (850)434-2661
253 ST. ANTHONY STREET
MOBILE, ALABAMA 36603
PHONE: (251)690-7446

ELECTRICAL SYMBOL LEGEND

SYMBOL	DESCRIPTION
	PANELBOARD – SEE RESPECTIVE PANELBOARD SCHEDULE.
A/1	BRANCH CIRCUIT CONDUIT RUN CONCEALED IN WALL OR ABOVE CEILING. ARROWS INDICATE CIRCUIT HOMERUN, HASHMARKS INDICATE NUMBER OF CONDUCTORS, ABSENCE OF HASHMARKS INDICATES TWO CONDUCTORS PLUS GROUND. "A" DENOTES PANELBOARD SERVING CIRCUIT, "1" INDICATES CIRCUIT BREAKER SPACE IN PANELBOARD. SEE RESPECTIVE PANEL CIRCUIT SCHEDULE. MINIMUM CONDUCTOR SIZE = #12 AWG.
	INDICATES CONDUIT RUN UNDERGROUND.
	NON-FUSED DISCONNECT, HEAVY DUTY (SAFETY) SWITCH – SIZE AND TYPE AS NOTED. TOP OF SWITCH 6'–6" A.F.F. PROVIDE MECHANICALLY FASTENED PHENOLIC LABEL.
	ELECTRIC MOTOR – SEE RESPECTIVE EQUIPMENT SCHEDULE.
	20A, 125 VAC 2P., 3W., GROUNDING TYPE, DOUBLE DUPLEX RECEPTACLE. FLUSH WALL MOUNTED 18" A.F.F. WITH GROUND PIN FACING UP UNLESS NOTED OTHERWISE.
	20A, 125 VAC 2P., 3W., GROUNDING TYPE, DUPLEX RECEPTACLE. FLUSH WALL MOUNTED 18" A.F.F. WITH GROUND PIN FACING UP UNLESS NOTED OTHERWISE.
	INDICATES GROUND FAULT CIRCUIT INTERRUPTING RECEPTACLE. FLUSH WALL MOUNTED 18" A.F.F. WITH GROUND PIN FACING UP UNLESS NOTED OTHERWISE.
	(2) 20A, 125 VAC 2P., 3W., GROUNDING TYPE, DUPLEX RECEPTACLES FLUSH MOUNTED IN FLOOR BOX WITH FLUSH FACEPLATE AND (2) TYPE "D2" DATA OUTLETS AS INDICATED ON TELECOM LEGEND. PROVIDE DEVICE MOUNTING BRACKETS FOR EACH DEVICE. ONE OF THE TWO DUPLEX RECEPTACLES SHALL BE SWITCHED ENTIRELY. FLOOR BOX EQUAL TO WIREMOLD CAT# RFB4 SERIES WITH COVER EQUAL TO WIREMOLD CAT# FPCTC(FINISH BY ARCHITECT). PROVIDE A MINIMUM 1" CONDUIT FOR CAT-5e CABLES ROUTED UNDERGROUND OVER TO NEAREST FULL WALL AND UP TO 6" ABOVE ACCESSIBLE CEILING.
J	JUNCTION BOX LOCATION. SIZE AND TYPE AS REQUIRED.
	INSTALL OUTLET TO MATCH PLUG ON EQUIPMENT.
P	POWER RELAY TO INTERLOCK WITH 277V LIGHTS OR MECHANICAL CONTROLS EQUIPMENT. COORDINATE VOLTAGE REQUIREMENTS WITH THE MECHANICAL CONTRACTOR FOR MECHANICAL EQUIPMENT INTERLOCKS.
C	INDICATES DEVICE FLUSH MOUNTED HORIZONTALLY 6" ABOVE COUNTERTOP OR IN BACKSPLASH.
EWC	COORDINATE DEVICE LOCATION WITH ELECTRIC WATER COOLER. MOUNT IN AN ACCESSIBLE LOCATION.
WP	INDICATES WEATHER RESISTANT WIRING DEVICE WITH WEATHER PROOF IN–USE COVER PLATE.
GFI	INDICATES GROUND FAULT CIRCUIT INTERRUPTER TYPE DEVICE.
R	INDICATES RED DEVICE WITH RED FACE PLATE
P	CEILING MOUNTED RECEPTACLE FOR PROJECTOR. COORDINATE EXACT LOCATION WITH OWNER.

SYMBOLS NOTES: UNLESS OTHERWISE NOTED THE FOLLOWING SHALL APPLY:

1. ALL OUTLETS SHALL BE FLUSH MOUNTED.
2. MOUNTING HEIGHTS ARE FROM THE CENTER LINE OF THE DEVICE.
3. ALL SINGLE GANG AND TWO GANG DEVICES SHALL USE A 4" SQ. BOX WITH EXTENSION RING.
4. ALL MULTI – GANG DEVICES SHALL USE A COMMON COVER PLATE
5. ALL DEVICES (i.e. SWITCHES, RECEPTACLES, TELEPHONE OUTLETS, ETC.) SHALL BE GRAY WITH STAINLESS STEEL COVER PLATES.
6. A.F.F. INDICATES MOUNTING HEIGHT ABOVE FINISHED FLOOR.
7. ALL WIRING SHALL BE COPPER.
8. DO NO INSTALL OUTLETS BACK TO BACK.
9. PROVIDE INDICATES THE ELECTRICAL CONTRACTOR SHALL PROVIDE AND INSTALL.
10. WHERE MORE THAN 3 CURRENT CARRYING CONDUCTORS MAY BE RUN IN A SINGLE CONDUIT, NEC SECTION 310.15 SHALL APPLY.

ANY PENETRATIONS THROUGH RATED WALLS SHALL BE SEALED PER THE NEC WITH UL LISTED FIRE STOPPING COMPOUND.

ALL RECEPTACLES SHALL BE TAMPER RESISTANT.

CONTRACTOR SHALL PROVIDE THE OWNER WITH RECORD DRAWINGS AND MANUALS THAT PROVIDE INSTRUCTION ABOUT THE OPERATION AND MAINTENANCE OF THE BUILDING'S ELECTRICAL DISTRIBUTION SYSTEM. REFER TO ASHRAE 90.1 2013 8.7.

OVERALL ELECTRICAL GENERAL NOTES:

a. THE CONTRACTOR SHALL VISIT THE JOB SITE AND BECOME FAMILIAR WITH THE EXTENT OF WORK REQUIRED TO COMPLETE THE JOB PRIOR TO BIDDING.

b. THE CONTRACTOR SHALL COORDINATE THE LOCATION OF ALL MECHANICAL EQUIPMENT WITH THE MECHANICAL CONTRACTOR PRIOR TO ROUGH IN AND INSTALLATION.

c. ALL PRIMARY CONDUIT SHALL BE RUN AT 48" BELOW FINISHED GRADE. ALL SECONDARY AND EXTERIOR UNDERGROUND BRANCH CIRCUIT CONDUIT(S) SHALL BE RUN 36" BELOW FINISHED GRADE.

d. IN ALL MECHANICAL ROOMS, ALL CONDUIT AND BOXES ARE TO BE SURFACE MOUNTED.

e. THE CONTRACTOR SHALL PROVIDE WEATHER PROOF / FIRE SEAL AS REQUIRED ON ALL EXTERIOR WALL PENETRATIONS.

f. ALL PENETRATIONS THROUGH RATED WALLS SHALL BE SEALED WITH UL APPROVED METHODS.

g. IT IS THE RESPONSIBILITY OF THE FIRE ALARM CONTRACTOR TO PROVIDE ANY NECESSARY COMPONENTS (i.e. BOOSTER PANELS) AND MAKE ALL THE NECESSARY CONNECTIONS FROM THE NEW FIRE ALARM DEVICES AND JUNCTION BOX TO THE EXISTING FIRE ALARM CONTROL PANEL IN THE EXISTING ADMIN BUILDING AND THE TO ENSURE A FULLY FUNCTIONAL CAMPUS WIDE SYSTEM.

h. ALL PHASING OF WORK SHALL BE SCHEDULED WITH THE OWNER AND ARCHITECT PRIOR TO COMMENCEMENT OF WORK. THE CONTRACTOR SHALL SCHEDULE ALL OUTAGES WITH THE OWNER AT LEAST (14) DAYS IN ADVANCE AND ANY GIVEN OUTAGE SHALL NOT BE A DURATION IN EXCESS OF (8) HOURS.

i. CONTRACTOR SHALL COORDINATE ALL UNDERGROUND WORK WITH OTHER EXISTING/NEW UTILITIES TO AVOID CONFLICT.

LIGHTING SYMBOL LEGEND

SYMBOL	DESCRIPTION
	"LED" LIGHTING FIXTURE. LETTER(S) DENOTE TYPE – SEE LIGHTING FIXTURE SCHEDULE.
	"LED" LIGHTING FIXTURE WITH INTEGRAL BATTERY BACKUP.
	"LED" LIGHTING FIXTURE CONNECTED TO INVERTER SYSTEM, SEE PLANS FOR REQUIREMENTS.
	LED LIGHTING FIXTURE. LETTER(S) DENOTE TYPE – SEE LIGHTING FIXTURE SCHEDULE.
	"LED" EXIT LIGHT. DARKENED QUADRANTS INDICATE ILLUMINATED FACES, ARROWS AS INDICATED. LETTER(S) DENOTE TYPE – SEE LIGHTING FIXTURE SCHEDULE.
	EMERGENCY INVERTER CIRCUIT
$	20 AMP, 120/277 VAC SINGLE POLE TOGGLE SWITCH – FLUSH WALL MOUNTED 48" A.F.F. UNLESS NOTED OTHERWISE. SUBSCRIPT INDICATES AS FOLLOWS: 3 – 20 AMP, 120/277 VAC THREE WAY TOGGLE SWITCH 4 – 20 AMP, 120/277 VAC FOUR WAY TOGGLE SWITCH DT – DUAL TECHNOLOGY MOTION SENSOR WALL SWITCH. WATTSTOPPER DW–100. TIME DELAY DURATION SHALL BE 20 MINUTES MAXIMUM. PROGRAM FOR "MANUAL ON". M – 30 AMP SWITCH EQUAL TO HUBBELL HBL7832D OR HBL7810D, AS REQUIRED. PROVIDE PHENOLIC LABEL. MO – LOW VOLTAGE MOMENTARY TOGGLE SWITCH EQUAL TO WATTSTOPPER LVS–1 FOR "MANUAL ON" CONTROL OF CEILING MOUNTED OCCUPANCY MO,D – LOW VOLTAGE MANUAL ON AND DIMMING WALL SWITCH EQUAL TO WATTSTOPPER DCLV2. SEE LIGHTING PLANS AND DETAILS FOR ADDITIONAL REQUIREMENTS. PROGRAM FOR "MANUAL ON". PROVIDE ALL 0–10V WIRING AS REQUIRED.
	DUAL TECHNOLOGY CEILING–MOUNTED 360° OCCUPANCY SENSOR, WATTSTOPPER DT–300. SEE LIGHTING CONTROL WIRING DIAGRAM FOR ADDITIONAL INFORMATION. MOUNT AT LOCATION AS INDICATED ON PLANS. DEVICE SHALL BE PROGRAMMED FOR "AUTOMATIC ON" (UNLESS INDICATED OTHERWISE ON PLANS). PROGRAM SUCH THAT BOTH TECHNOLOGIES ARE REQUIRED TO TRIGGER LIGHTS "ON" AND EITHER TECHNOLOGY SHALL "HOLD" LIGHTS "ON". SEE PLANS FOR SENSOR LOCATIONS THAT ARE "MANUAL ON" ONLY ^{MO}. TIME DELAY DURATION SHALL BE 20 MINUTES MAXIMUM. SEE MANUFACTURERS INSTRUCTIONS FOR APPROPRIATE DIP SWITCH SETTINGS.
	DUAL TECHNOLOGY CORNER MOUNTED OCCUPANCY SENSOR, WATTSTOPPER DT–200. SEE LIGHTING CONTROL WIRING DIAGRAM FOR ADDITIONAL INFORMATION. MOUNT AT LOCATION AS INDICATED ON PLANS. PROGRAM SUCH THAT BOTH TECHNOLOGIES ARE REQUIRED TO TRIGGER LIGHTS "ON" AND EITHER TECHNOLOGY SHALL "HOLD" LIGHTS "ON". TIME DELAY DURATION SHALL BE 20 MINUTES MAXIMUM. SEE MANUFACTURERS INSTRUCTIONS FOR APPROPRIATE DIP SWITCH SETTINGS. DEVICE SHALL BE AIMED AS NECESSARY TO OPTIMIZE MOTION DETECTION AT DOOR THRESHOLD. SEE PLANS FOR SENSOR LOCATIONS THAT ARE "MANUAL ON" ONLY ^{MO}
RP2	POWER PACK RELAY FOR CONTROL OF LIGHTING CONTROLS, EQUAL TO WATTSTOPPER CAT# BZ–150. MOUNT DEVICE IN AN ACCESSIBLE LOCATION.
PP	POWER PACK RELAY FOR CONTROL OF RECEPTACLES, EQUAL TO WATTSTOPPER CAT# BZ–200. MOUNT DEVICE IN AN ACCESSIBLE LOCATION.
DDC	DIGITAL ROOM CONTROLLER WITH ONE ZONE ON/OFF/DIMMING EQUAL TO WATTSTOPPER LMRC–211. SEE LIGHTING PLANS AND DETAIL SHEETS FOR ADDITIONAL INFORMATION. MOUNT DEVICE IN AN ACCESSIBLE LOCATION. PROVIDE ALL 0–10V WIRING FROM CONTROLLER TO FIXTURES, AS REQUIRED. ALL ROOM CONTROLLERS SHALL BE INTERCONNECTED WITH CAT5E CABLING. ALL CAT5E SHALL BE PRE–ATERMINATED.
ODP	OUTDOOR PIR MOTION SENSOR WITH DAYLIGHT PHOTO CONTROL AND DIMMING EQUAL TO WATTSTOPPER FSP–201. SEE LIGHTING PLANS AND CONTROL DETAILS FOR ADDITIONAL INFORMATION.
ERC	EMERGENCY AUTOMATIC LOAD CONTROL RELAY EQUAL TO WATTSTOPPER ELCU–200 FOR NON–DIMMING FIXTURES. RELAY SHALL BYPASS NORMAL POWER TO ALLOW INVERTER SUPPLIED LIGHTING LOADS TO ENERGIZE WHEN NORMAL POWER IS LOST. RELAY SHALL SENSE LOSS OF NORMAL POWER AND AUTOMATICALLY CONTROL LUMINAIRE TO FULL BRIGHTNESS REGARDLESS OF OCCUPANCY SENSOR STATUS. SEE LIGHTING PLANS AND CONTROL DETAILS FOR ADDITIONAL INFORMATION.
ER	EMERGENCY AUTOMATIC LOAD CONTROL RELAY EQUAL TO NINE24 ELCR–Z10 FOR DIMMING FIXTURES. RELAY SHALL BYPASS NORMAL POWER TO ALLOW INVERTER SUPPLIED LIGHTING LOADS TO ENERGIZE WHEN NORMAL POWER IS LOST. RELAY SHALL SENSE LOSS OF NORMAL POWER AND AUTOMATICALLY CONTROL LUMINAIRE TO FULL BRIGHTNESS REGARDLESS OF DIMMING STATE OR OCCUPANCY SENSOR STATUS. SEE LIGHTING PLANS AND CONTROL DETAILS FOR ADDITIONAL INFORMATION.

SYMBOLS LEGEND GENERAL NOTES:

1. ALL DEVICES ARE TO BE FLUSH MOUNTED.
2. MOUNTING HEIGHTS ARE FROM THE CENTER LINE OF THE DEVICE.
3. ALL SINGLE GANG AND TWO GANG DEVICES SHALL USE A 4" SQ. BOX WITH EXTENSION RING.
4. ALL MULTI – GANG DEVICES SHALL USE A COMMON COVER PLATE COLORS FOR ALL DEVICES (i.e. SWITCHES, RECEPTACLES, TELEPHONE OUTLETS, ETC.) SHALL BE GRAY WITH STAINLESS STEEL COVER PLATES.
5. LIGHTING CONTROL SYSTEM SHALL BE PROGRAMMED BY A CERTIFIED LIGHTING CONTROLS COMMISSIONING INSTALLER.
6. CONTRACTOR SHALL REFERENCE DETAIL SHEETS E700.1 – E700.3 FOR LOW VOLTAGE LIGHTING SWITCH WIRING REQUIREMENTS.
7. CONTRACTOR SHALL REFERENCE DETAIL SHEETS E700.1 – E700.3 FOR LIGHTING CONTROL WIRING REQUIREMENTS.

LIGHTING FIXTURE SCHEDULE

THE LIGHTING PACKAGE SHALL BE PROVIDED PER THE LIGHTING FIXTURE SCHEDULE AND ELECTRICAL SPECIFICATIONS. ANY LIGHTING FIXTURE SUBSTITUTIONS SHALL BE SUBMITTED NO LESS THAN 10 DAYS PRIOR TO BID. ACCEPTANCE OF LIGHT FIXTURE SUBSTITUTIONS SHALL BE AT THE SOLE DISCRETION OF THE ARCHITECT/ENGINEER. SUBSTITUTIONS WILL NOT BE CONSIDERED IF SUBMITTED AFTER THE 10 DAY PRIOR APPROVAL DEADLINE. NO LIGHT FIXTURE SUBSTITUTIONS WILL BE APPROVED AFTER BIDDING. SUBSTITUTE PACKAGES MAY BE RESUBMITTED ONE TIME FOLLOWING THE INITIAL ENGINEER'S REVIEW. FAILURE TO PROVIDE AN APPROVED EQUIVALENT PACKAGE WILL RESULT IN DISAPPROVAL OF THE ENTIRE SUBSTITUTE PACKAGE.

MARK	LAMPS	MOUNTING	MANUFACTURER	CATALOG NUMBER
R1 R1EM	31 LED	RECESSED	LITHONIA	2BLT4 40L ADP LP835 2BLT4 40L ADP LP835 EL14L
R2 R2EM	37W LED	RECESSED	LITHONIA	2BLT4 48L ADP LP835 2BLT4 48L ADP LP835 EL14L
R3 R3EM	43W LED	RECESSED	LITHONIA	2BLT2 48L ADP LP835 2BLT2 48L ADP LP835 EL14L
R4	40W LED'S	RECESSED	LITHONIA	CPX 2x4 4000LM 80CRI 35K SWL
R5 R5EM	31W LED	RECESSED	LITHONIA	CPX 2X2 3200LM 80CRI 35K SWL CPX 2X2 3200LM 80CRI 35K SWL E10WLCP
R6	8.8W LED	RECESSED	GOTHAM	EVO4SH 35_10 DFR SOL
R7 R7EM	13.7W LED	RECESSED	GOTHAM	EVO4SH 35_15 AR MWD LSS EVO4SH 35_15 AR MWD LSS E10WCPR
R8	8.8W LED	RECESSED	GOTHAM	PRUDENTIAL LIGHTING BPRO3–FLSH–LED35–LO–4–SAL
C1 C1EM	30W LED 30W LED	CEILING/WALL CEILING/WALL	LITHONIA LITHONIA	ZL1D L48 3000LM FST MVOLT 35K 80CRI ZL1D L48 3000LM FST MVOLT 35K 80CRI E10WLCP
W1	33.6W LED	CEILING/WALL	LITHONIA	FMVTSL 48IN 30K
W2	17.7W LED'S	CEILING/WALL	LITHONIA	FMVTSL 24IN 30K
W4EM	40W LED	WALL	LUMINAIRE LED	TSL9 34IN 40W FAM7 35K CLP
WS WSEM	31W LED	WALL	SYRIOS	SY602 L2L15 R55 120 BZT SY602 L2L15 R55 120 BZT REML2–50
EX1	2W LED'S	CEILING/WALL	EMERGI–LITE	WPREMSNXR

SYSTEMS SYMBOL LEGEND

SYMBOL	DESCRIPTION
	WIRELESS SMART TV POWER AND DATA, COORDINATE ELEVATION WITH ARCHITECT PRIOR TO ANY ROUGH–IN. LOCATIONS SHOWN ON PLAN ARE APPROXIMATIONS ONLY AND SHALL NOT BE USED FOR SPECIFIC ROUGH–IN LOCATIONS. ALL ROUGH–IN LOCATIONS SHALL BE COORDINATED WITH THE ARCHITECT PRIOR TO BEGINNING ANY WORK. SMART TV IS PROVIDED BY OTHERS, 120V POWER AND DATA IS TO BE CONNECTED BY THE ELECTRICAL CONTRACTOR. PROVIDE AND INSTALL 120V 20A RECEPTACLE AS RECOMMENDED BY THE TV MANUFACTURER. PROVIDE POWER CONNECTION TO LOCAL RECEPTACLE CIRCUIT. FIELD COORDINATE RECEPTACLE MOUNTING HEIGHT WITH ARCHITECT PRIOR TO ROUGH–IN, RECEPTACLE SHALL BE CONCEALED BEHIND TV. CONTRACTOR SHALL INSTALL D2 DATA OUTLET CONCEALED BEHIND SMART TV. FIELD COORDINATE DATA OUTLET MOUNTING HEIGHT WITH ARCHITECT PRIOR TO ROUGH–IN. PROVIDE ARLINGTON DVFR2 RECESSED WALL BOX.
IC	INTERCOM SYSTEM WALL MOUNTED CALL STATION. MOUNT 48" AFF.
	WEATHER PROOFED, WALL MOUNTED, INTERCOM SYSTEM SPEAKER. MOUNT 9'–0" AFF.
S	INTERCOM SYSTEM CEILING MOUNTED SPEAKER.
C	WIRELESS WALL ANALOG CLOCK, MOUNTED 1' ABOVE MARKER BOARD. COORDINATE EXACT LOCATION WITH ARCHITECT. PROVIDE ALL POWER CONNECTIONS AS REQUIRED. COORDINATE WITH CLOCK MANUFACTURER FOR RECEPTACLE REQUIREMENTS PRIOR TO ANY ROUGH–IN.
D1	DATA OUTLET IN A 4" SQUARE BOX WITH 1 GANG EXTENSION RING. DEVICE MOUNTED 18" AFF UNLESS NOTED OTHERWISE. STUB 3/4"C FROM BACKBOX TO 6" ABOVE ACCESSIBLE CEILING, PROVIDE CONDUIT BUSHINGS. PROVIDE 1–PORT COVER PLATE. COVER PLATE SHALL BE LABELED WITH DATA CLOSET ROOM NUMBER, DATA DROP NUMBER, AND LOCATION OF SERVING DATA CLOSET. ALL CABLES SHALL BE TESTED AND TERMINATED AT OUTLET AND COMMUNICATION BACKBOARD. INSTALLER SHALL HAVE RCDD ON STAFF. SEE SHEET E700.5.
D2	VOICE/DATA OUTLET IN A 4" SQUARE BOX WITH 1 GANG EXTENSION RING. DEVICE MOUNTED 18" AFF UNLESS NOTED OTHERWISE. STUB 3/4"C FROM BACKBOX TO 6" ABOVE ACCESSIBLE CEILING, PROVIDE CONDUIT BUSHINGS. PROVIDE 2–CAT5E VOICE/DATA CABLES BACK TO COMMUNICATIONS BACKBOARD. PROVIDE 2–PORT COVER PLATE. COVER PLATE SHALL BE LABELED WITH DATA CLOSET ROOM NUMBER, DATA DROP NUMBER, AND LOCATION OF SERVING DATA CLOSET. ALL CABLES SHALL BE TESTED AND TERMINATED AT OUTLET AND COMMUNICATION BACKBOARD. INSTALLER SHALL HAVE RCDD ON STAFF. SEE SHEET E700.5. "2C" INDICATES DEVICE SHALL BE PROVIDED WITH (2) 3/4"C CONDUITS TO ABOVE ACCESSIBLE CEILING.
WAP	CEILING MOUNTED WIRELESS ACCESS POINT COMMUNICATIONS OUTLET. TYPE "D1, PROVIDE AT LOCATIONS INDICATED.
	INTERCOM SYSTEM WIRING
	INTERCOM SYSTEM HOMERUN
CT	SECURITY SYSTEM DOOR CONTACT
	SECURITY CAMERA BY OTHERS. CONTRACTOR TO PROVIDE ORANGE CAT5E CABLE FROM CAMERA LOCATION TO I.T. ROOM, SEE SITE PLAN FOR LOCATION. COORDINATE ALL REQUIREMENTS WITH SECURITY VENDOR.
FAC	ADDRESSABLE INTELLIGENT FIRE ALARM SYSTEM CONTROL PANEL – WITH CELLULAR AUTO–DIAL OUT. VOICE EVACUATION CAPABLE.
ERRC	EMERGENCY RADIO RESPONDER COVERAGE HEAD END EQUIPMENT.
F	FIRE ALARM SYSTEM ADDRESSABLE PULL STATION – SEMI FLUSH MOUNTED 48" A.F.F. TO TOP UNLESS NOTED OTHERWISE.
CO	CARBON MONOXIDE SENSOR
SD	ADDRESSABLE INTELLIGENT CEILING MOUNTED FIRE ALARM SYSTEM PHOTOELECTRIC TYPE SMOKE DETECTOR WITH BASE.
HD	ADDRESSABLE INTELLIGENT FIRE ALARM SYSTEM HEAT DETECTOR RATE OF RISE TYPE.
	FIRE ALARM SYSTEM SPEAKER / STROBE DEVICE CEILING MOUNTED, UNLESS NOTED OTHERWISE. ALL STROBES IN COMMON SPACES OR CORRIDORS SHALL BE SYNCHRONIZED. STROBE SHALL BE 75 CANDELLA MINIMUM UNLESS NOTED OTHERWISE.
	FIRE ALARM SYSTEM VISUAL DEVICE CEILING MOUNTED, UNLESS NOTED OTHERWISE. ALL STROBES IN COMMON SPACES OR CORRIDORS SHALL BE SYNCHRONIZED. STROBE SHALL BE 75 CANDELLA MINIMUM UNLESS NOTED OTHERWISE.
F	EXTERIOR FIRE ALARM SYSTEM AUDIO ALARM (WEATHERPROOF DEVICE WITH WEATHERPROOF CAST BOX). FLUSH MOUNT. COORDINATE MOUNTING LOCATION WITH OBSTACLES AND MOUNT AS REQUIRED.
S R	ADDRESSABLE INTELLIGENT FIRE ALARM SYSTEM DUCT MOUNTED PHOTOELECTRIC SMOKE DETECTOR COMPLETE WITH HOUSING AND AIR SAMPLING TUBES. "S" DENOTES DETECTOR IN SUPPLY DUCT; "R" DENOTES DETECTOR IN RETURN DUCT.
R	FIRE ALARM SYSTEM INTERFACE MODULE – MOUNTED AT EQUIPMENT.
FS	SPRINKLER SYSTEM FLOW SWITCH. FURNISHED BY FIRE ALARM SYSTEM SUPPLIER, INSTALLED BY FIRE PROTECTION (SPRINKLER) SYSTEM CONTRACTOR, AND CONNECTED TO FIRE ALARM SYSTEM CONTROL PANEL BY FIRE ALARM SYSTEM CONTRACTOR.
TS	SPRINKLER SYSTEM TAMPER SWITCH. FURNISHED BY FIRE ALARM SYSTEM SUPPLIER, INSTALLED BY FIRE PROTECTION (SPRINKLER) SYSTEM CONTRACTOR, AND CONNECTED TO FIRE ALARM SYSTEM CONTROL PANEL BY FIRE ALARM SYSTEM CONTRACTOR.
VCC	ADDRESSABLE INTELLIGENT FIRE ALARM VOICE COMMAND CENTER.
MIC	ADDRESSABLE INTELLIGENT FIRE ALARM FIRE FIGHTERS MICROPHONE FLUSH MOUNTED IN WALL. COORDINATE FINAL LOCATION WITH THE AHJ PRIOR TO ROUGH–IN.
DH	FIRE ALARM SYSTEM DOOR HOLDER; WALL, FLOOR, OR CEILING MOUNTED AS REQUIRED. PROVIDE ANY EXTENSIONS RODS AS REQUIRED. COORDINATE WITH FIRE ALARM INSTALLER PRIOR TO ROUGH–IN FOR LOCATIONS AND REQUIREMENTS.

SYSTEMS LEGEND GENERAL NOTES:

1. LOW VOLTAGE CABLES SHALL BE SUPPORTED VIA J–HOOKS ON 4'0" TO 6'0" CENTERS BASED ON BUILDING STRUCTURE. SECURE J–HOOKS (ERICO CADDY CABLECAT OR EQUAL) TO CEILING, SLAB, OR ROOF BAR JOISTS. PROVIDE VELCRO TIE WRAPS ON 5'0" CENTERS TO ADEQUATELY BUNDLE AND SUPPORT CABLES, NO MORE THAN 24 CABLES PER BUNDLE. TIE WRAPS SHALL BE PROVIDED LOOSELY AROUND CABLES AS TO NO DISTORT THE ORIGINAL SHAPE OF ANY INDIVIDUAL CABLE. DO NOT TIE WRAP COMMUNICATIONS CABLING TO ANY OTHER CABLING (I.E. HVAC CONTROL, ELECTRICAL CONDUIT, ETC.). CLIP OFF ALL EXCESS TIE WRAP AFTER INSTALLATION. REFERENCE "TYPICAL COMMUNICATIONS OUTLET ROUGH–IN MOUNTING DETAIL" ON SHEET E300.2
2. PROVIDE CONDUIT SLEEVES FOR CABLE ACCESS THROUGH FIRE WALLS, PROVIDE UL LISTED FIRE STOPPING.
3. ALL CONDUIT RACEWAYS FOR LOW VOLTAGE CABLING SHALL BE PROVIDED WITH PLASTIC CONDUIT BUSHINGS.
4. ALL LOW VOLTAGE CABLING SHALL BE TESTED AND TERMINATED BY OWNER.
5. ALL OUTLETS ARE TO BE FLUSH MOUNTED.
6. MOUNTING HEIGHTS ARE FROM THE CENTER LINE OF THE DEVICE.
7. ALL SINGLE GANG AND TWO GANG DEVICES SHALL USE A 4" SQ. BOX WITH EXTENSION RING.
8. ALL MULTI – GANG DEVICES SHALL USE A COMMON COVER PLATE
9. ALL DEVICE COVER PLATES SHALL BE STAINLESS STEEL. SEE SPECIFICATION FOR KEYSTONE COLOR REQUIREMENTS.
10. A.F.F. INDICATES MOUNTING HEIGHT ABOVE FINISHED FLOOR.
11. LABELED TERMINATIONS ARE TO BE PROVIDED AT ALL CABLE ENDS. ALL CONNECTORS ARE TO BE PROVIDED, INSTALLED AND TESTED BY COMMUNICATIONS CONTRACTOR.

H.M. YONGE & ASSOCIATES, INC.
CONSULTING ENGINEERS // EST. 1988
51 EAST GREGORY STREET
PENSACOLA, FLORIDA 32502
PHONE: (850)434-2661
253 ST. ANTHONY STREET
MOBILE, ALABAMA 36603
PHONE: (251)690-7446

LATHAN ARCHITECTS
LATHAN • BRYANT • CALMA

ADDITION AND RENOVATION FOR
FLOMATON ELEMENTARY SCHOOL
PACKAGE A: MEDIA CENTER AND CLASSROOM ADDITION
1634 POPLAR STREET, FLOMATON, AL 36441
ESCAMBIA COUNTY BOARD OF EDUCATION

ALABAMA LICENSED No. 26807 PROFESSIONAL ENGINEER JOHN THOMAS VARGHESE

SHEET TITLE:
ELECTRICAL DETAILS

PROJ. MGR.: A. VARGHESE
DRAWN: J. COOK
DATE: FEBRUARY 15, 2022
REVISIONS

JOB NO. 21-04A
SHEET NO:
E0.0

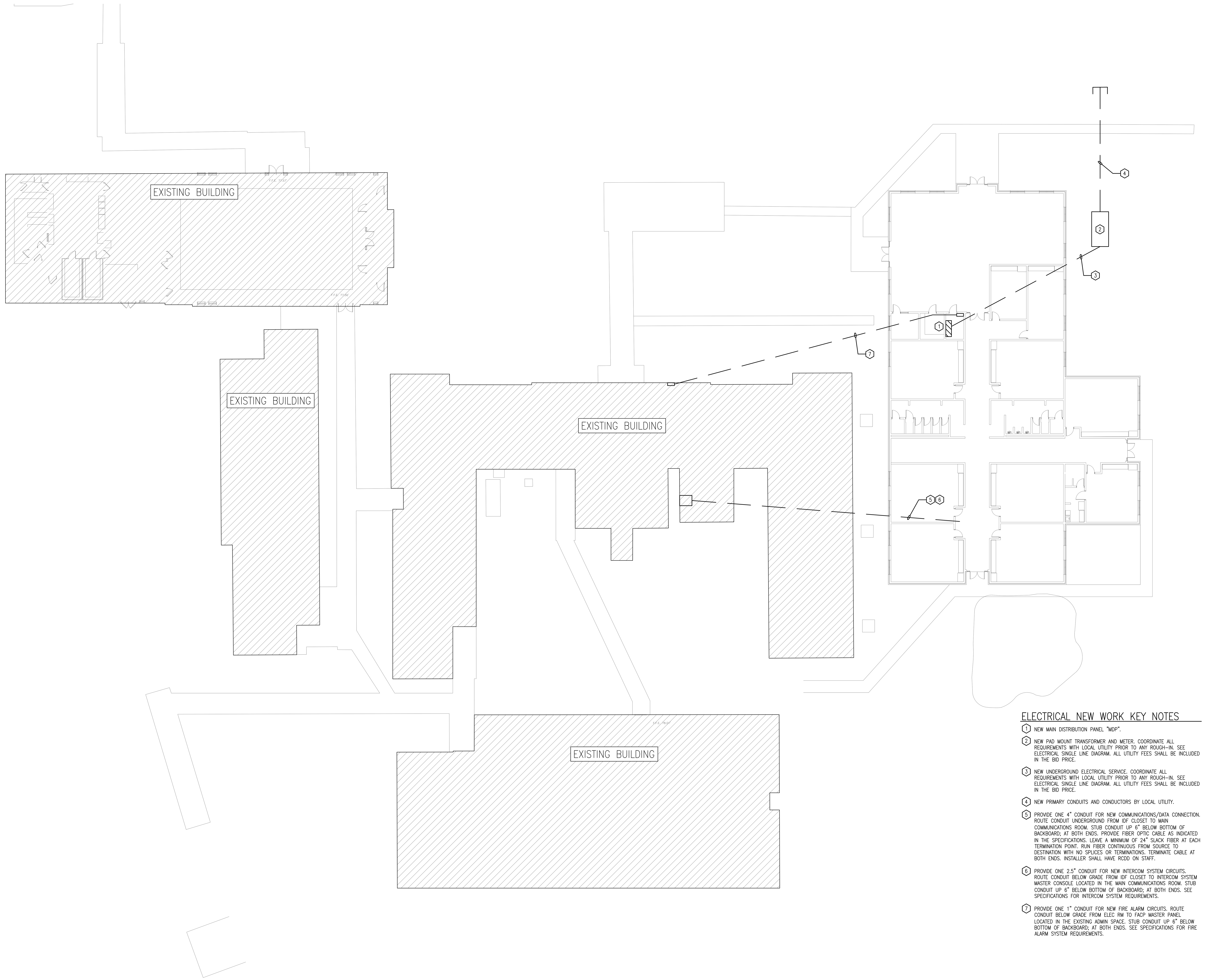

1 ELECTRICAL SITE PLAN

1/16" = 1'-0"

ELECTRICAL NEW WORK KEY NOTES

1. NEW MAIN DISTRIBUTION PANEL "MDP".
2. NEW PAD MOUNT TRANSFORMER AND METER. COORDINATE ALL REQUIREMENTS WITH LOCAL UTILITY PRIOR TO ANY ROUGH-IN. SEE ELECTRICAL SINGLE LINE DIAGRAM. ALL UTILITY FEES SHALL BE INCLUDED IN THE BID PRICE.
3. NEW UNDERGROUND ELECTRICAL SERVICE. COORDINATE ALL REQUIREMENTS WITH LOCAL UTILITY PRIOR TO ANY ROUGH-IN. SEE ELECTRICAL SINGLE LINE DIAGRAM. ALL UTILITY FEES SHALL BE INCLUDED IN THE BID PRICE.
4. NEW PRIMARY CONDUITS AND CONDUCTORS BY LOCAL UTILITY.
5. PROVIDE ONE 4" CONDUIT FOR NEW COMMUNICATIONS/DATA CONNECTION. ROUTE CONDUIT UNDERGROUND FROM IDF CLOSET TO MAIN COMMUNICATIONS ROOM. STUB CONDUIT UP 6" BELOW BOTTOM OF BACKBOARD; AT BOTH ENDS. PROVIDE FIBER OPTIC CABLE AS INDICATED IN THE SPECIFICATIONS. LEAVE A MINIMUM OF 24" SLACK FIBER AT EACH TERMINATION POINT. RUN FIBER CONTINUOUS FROM SOURCE TO DESTINATION WITH NO SPLICES OR TERMINATIONS. TERMINATE CABLE AT BOTH ENDS. INSTALLER SHALL HAVE RCDD ON STAFF.
6. PROVIDE ONE 2.5" CONDUIT FOR NEW INTERCOM SYSTEM CIRCUITS. ROUTE CONDUIT BELOW GRADE FROM IDF CLOSET TO INTERCOM SYSTEM MASTER CONSOLE LOCATED IN THE MAIN COMMUNICATIONS ROOM. STUB CONDUIT UP 6" BELOW BOTTOM OF BACKBOARD; AT BOTH ENDS. SEE SPECIFICATIONS FOR INTERCOM SYSTEM REQUIREMENTS.
7. PROVIDE ONE 1" CONDUIT FOR NEW FIRE ALARM CIRCUITS. ROUTE CONDUIT BELOW GRADE FROM ELEC RM TO FACP MASTER PANEL LOCATED IN THE EXISTING ADMIN SPACE. STUB CONDUIT UP 6" BELOW BOTTOM OF BACKBOARD; AT BOTH ENDS. SEE SPECIFICATIONS FOR FIRE ALARM SYSTEM REQUIREMENTS.

H.M. YONGE & ASSOCIATES, INC.
CONSULTING ENGINEERS // EST. 1988
51 EAST GREGORY STREET
PENSACOLA, FLORIDA 32502
PHONE: (850)434-2661
253 ST. ANTHONY STREET
MOBILE, ALABAMA 36603
PHONE: (251)690-7446

LATHAN ARCHITECTS
LATHAN • BRYANT • CALMA

ADDITION AND RENOVATION FOR

FLOMATON ELEMENTARY SCHOOL

PACKAGE A: MEDIA CENTER AND CLASSROOM ADDITION
1634 POPLAR STREET, FLOMATON, AL 36441
ESCAMBIA COUNTY BOARD OF EDUCATION

PROFESSIONAL ENGINEER
ARUN THOMAS VARGHESE

SHEET TITLE:
ELECTRICAL SITE PLAN

PROJ. MGR.:	A. VARGHESE
DRAWN:	J. COOK
DATE:	FEBRUARY 15, 2022
REVISIONS	

JOB NO. 21-04A

SHEET NO:

E0.1

0 1" 2"

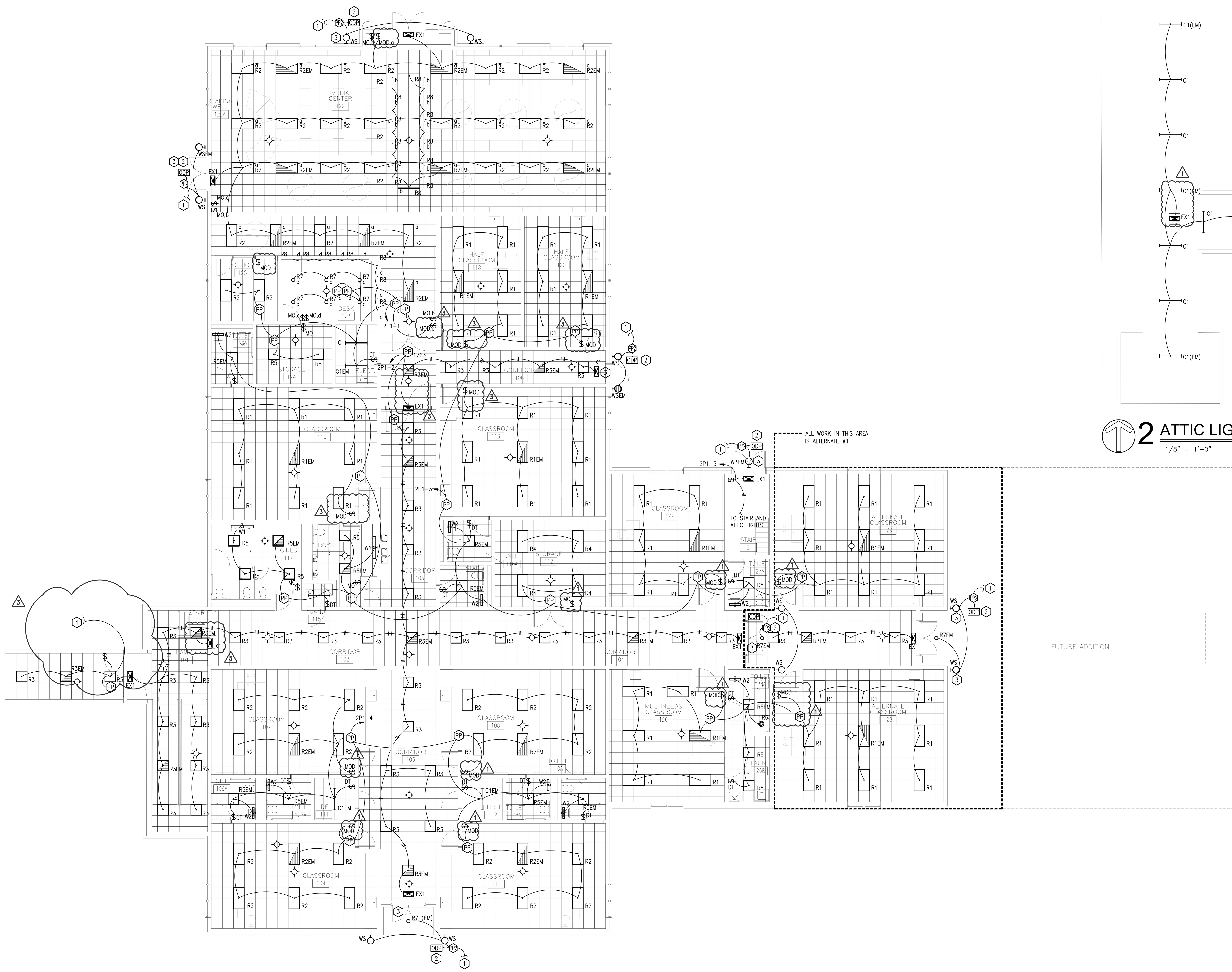

1 LIGHTING PLAN

1/8" = 1'-0"

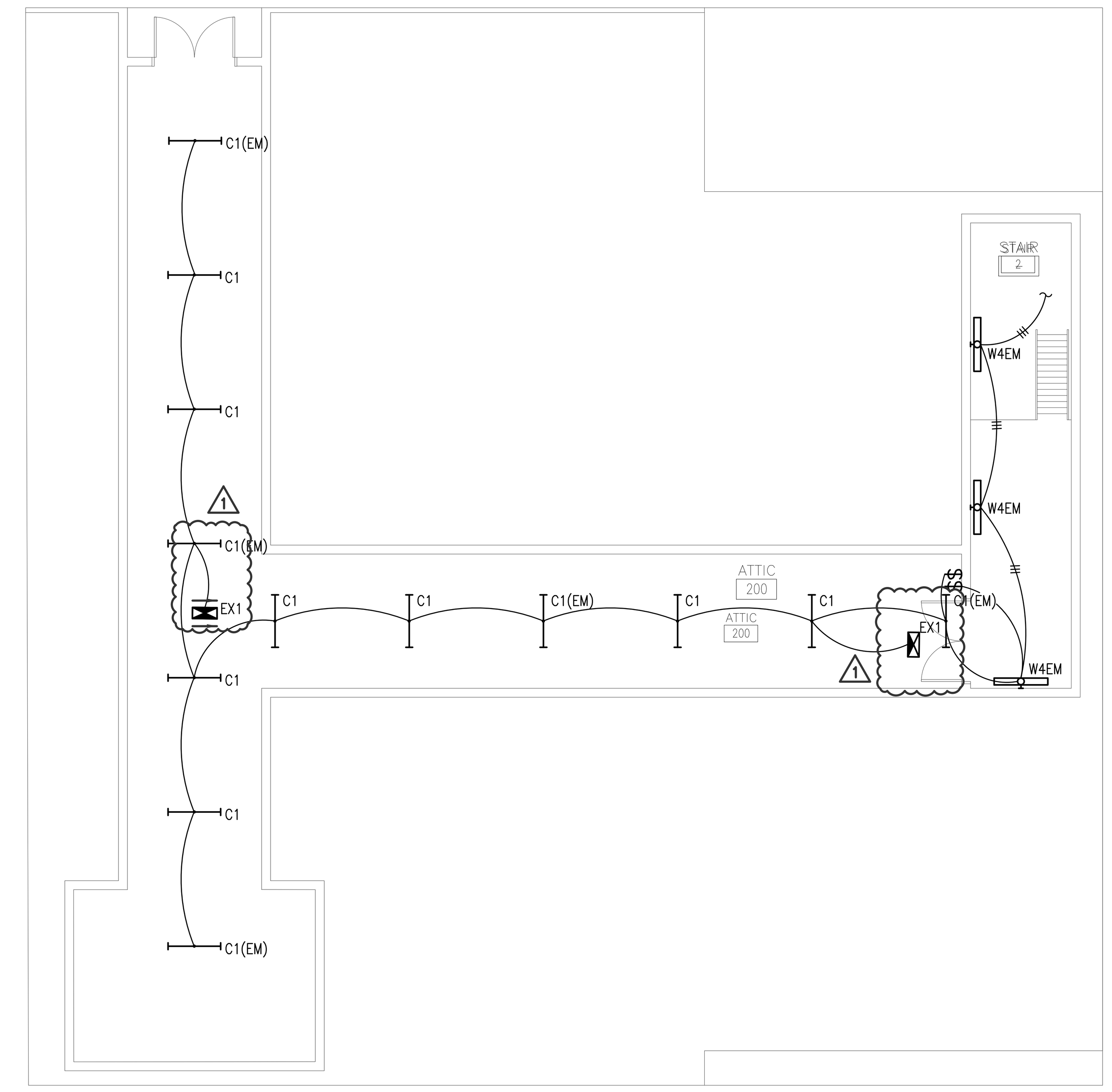

2 ATTIC LIGHTING PLAN

1/8" = 1'-0"

LIGHTING KEYNOTES:

1. FIXTURE FED FROM PANEL 2P1 CIRCUIT #6, PROVIDE ALL POWER CONNECTIONS AS REQUIRED. SEE PANEL SCHEDULE, LIGHTING FIXTURE SCHEDULE, AND LEGEND FOR ADDITIONAL INFORMATION.
2. POWER RELAY SHALL BE INSTALLED ABOVE CLOSEST ACCESSIBLE CEILING.
3. FIXTURE SHALL BE CONTROLLED WITH OUTDOOR SENSOR FOR DUSK/DAWN VIA PHOTOCELL AND PROGRAMMED TO DIM BY 30% DURING ANY PERIOD WHERE NO ACTIVITY HAS BEEN DETECTED FOR LONGER THAN 15 MINUTES. SEE EXTERIOR FIXTURE CONTROL DIAGRAM AND LEGEND FOR ADDITIONAL INFORMATION.
4. CONNECT TO EXISTING LIGHTING CIRCUIT IN THE CORRIDOR OF THE EXISTING BUILDING.

3

H.M. YONGE & ASSOCIATES, INC.
CONSULTING ENGINEERS // EST. 1988

51 EAST GREGORY STREET
PENSACOLA, FLORIDA 32502
PHONE: (850)434-2661

253 ST. ANTHONY STREET
MOBILE, ALABAMA 36603
PHONE: (251)690-7446

LATHAN ARCHITECTS
LATHAN • BRYANT • CALMA

ADDITION AND RENOVATION FOR
FLOMATON ELEMENTARY SCHOOL
PACKAGE A: MEDIA CENTER AND CLASSROOM ADDITION
1634 POPLAR STREET, FLOMATON, AL 36441
ESCAMBIA COUNTY BOARD OF EDUCATION

SHEET TITLE:
LIGHTING & POWER PLAN

PROJ. MGR.: A. VARGHESE
DRAWN:
DATE: FEBRUARY 15, 2022
REVISIONS

JOB NO. 21-04A
SHEET NO:
E1.1

0 1" 2"

JAC> M:\Jobs_Active\21107 Flomaton ES Addition and Renovation\21107E11.dwg 09/10/21 15:53

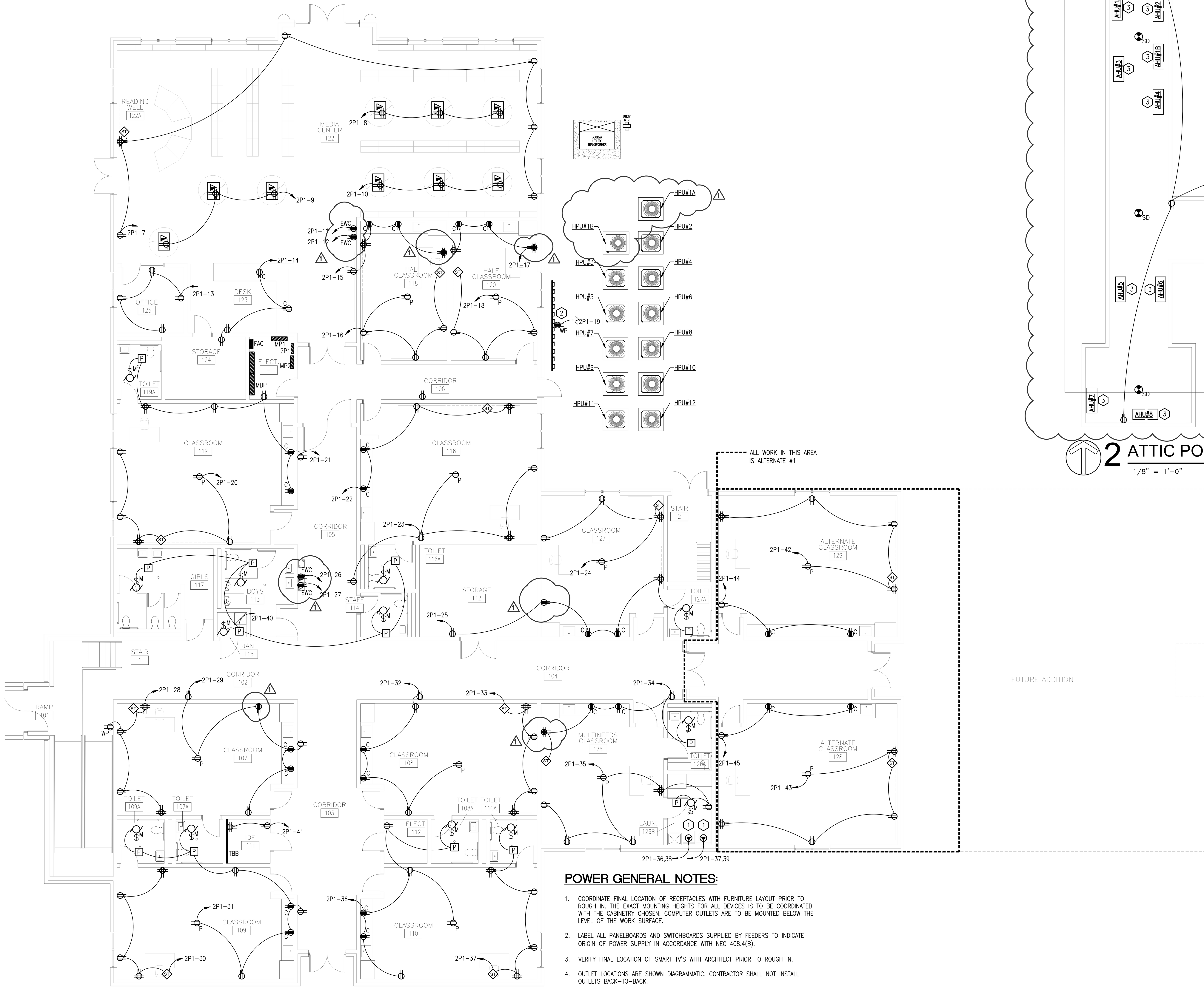

1 POWER PLAN

1/8" = 1'-0"

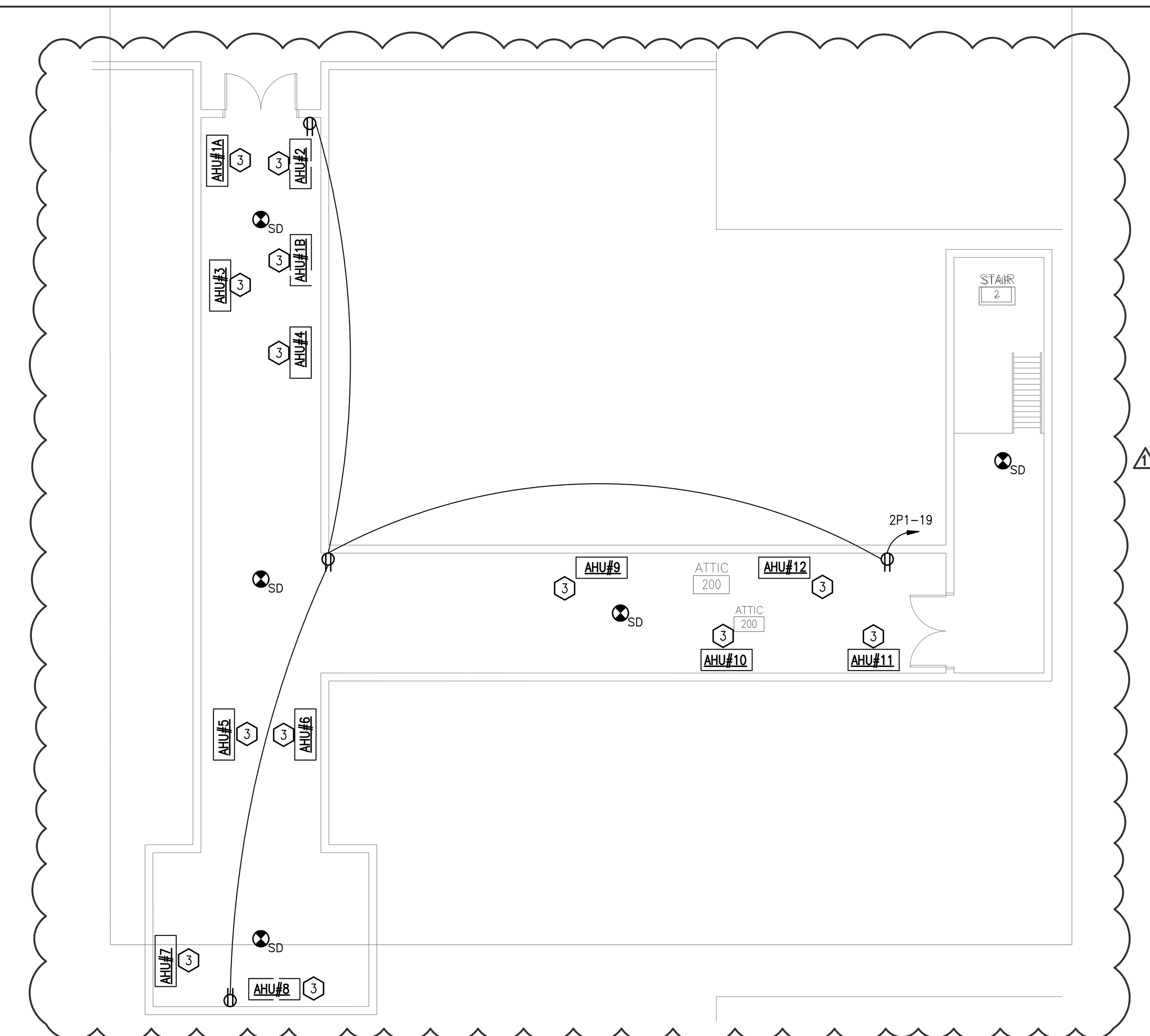

2 ATTIC POWER PLAN

1/8" = 1'-0"

POWER GENERAL NOTES:

1. COORDINATE FINAL LOCATION OF RECEPTACLES WITH FURNITURE LAYOUT PRIOR TO ROUGH IN. THE EXACT MOUNTING HEIGHTS FOR ALL DEVICES IS TO BE COORDINATED WITH THE CABINETRY CHOSEN. COMPUTER OUTLETS ARE TO BE MOUNTED BELOW THE LEVEL OF THE WORK SURFACE.
2. LABEL ALL PANELBOARDS AND SWITCHBOARDS SUPPLIED BY FEEDERS TO INDICATE ORIGIN OF POWER SUPPLY IN ACCORDANCE WITH NEC 408.4(B).
3. VERIFY FINAL LOCATION OF SMART TV'S WITH ARCHITECT PRIOR TO ROUGH IN.
4. OUTLET LOCATIONS ARE SHOWN DIAGRAMMATIC. CONTRACTOR SHALL NOT INSTALL OUTLETS BACK-TO-BACK.
5. FOR ALL MECHANICAL AND PLUMBING EQUIPMENT, REFERENCE THE EQUIPMENT SCHEDULES FOR CIRCUIT INFORMATION, WIRE SIZES, AND DISCONNECT SIZES.
6. ALL EXTERIOR UNITS SHALL BE PROVIDED WITH A 3/4" CONDUIT WITH PULL STRING ROUTED UNDERGROUND FOR HVAC CONTROL WIRING FROM EXTERIOR HVAC UNIT TO ASSOCIATED MECHANICAL ROOM. COORDINATE ALL CONDUIT STUB LOCATIONS WITH MECHANICAL CONTRACTOR PRIOR TO ANY ROUGH-IN. CAP CONDUIT AT BOTH ENDS.

POWER KEYNOTES:

1. COMMERCIAL GRADE WASHER AND DRYER TO BE PROVIDED BY GENERAL CONTRACTOR. COORDINATE RECEPTACLE TYPES, FEEDER SIZE, AND BREAKER SIZE WITH EQUIPMENT BEING INSTALLED.
2. ~~PROVIDE UNISTRUT RACK FOR MOUNTING DISCONNECT SWITCHES.~~
3. PROVIDE SUPPLY AND RETURN AIR DUCT DETECTOR AND RELAYS IN AIR HANDLER. COORDINATE WITH HVAC CONTRACTOR FOR MORE INFORMATION.

H.M. YONGE & ASSOCIATES, INC.
CONSULTING ENGINEERS // EST. 1988

51 EAST GREGORY STREET
PENSACOLA, FLORIDA 32502
PHONE: (850)434-2661

253 ST. ANTHONY STREET
MOBILE, ALABAMA 36603
PHONE: (251)690-7446

LATHAN ARCHITECTS
LATHAN • BRYANT • CALMA

ADDITION AND RENOVATION FOR
FLOMATON ELEMENTARY SCHOOL
PACKAGE A: MEDIA CENTER AND CLASSROOM ADDITION
1634 POPLAR STREET, FLOMATON, AL 36441
ESCAMBIA COUNTY BOARD OF EDUCATION

ALABAMA LICENSED PROFESSIONAL ENGINEER No. 34807 ARUN THOMAS VARGHESE

SHEET TITLE:
LIGHTING & POWER PLAN

PROJ. MGR.: A. VARGHESE
DRAWN:
DATE: FEBRUARY 15, 2022
REVISIONS

JOB NO. 21-04A

SHEET NO:
E2.1

0 1" 2"

JAC> M:\Jobs_Active\21107 Flomaton ES Addition and Renovation\21107E11.dwg 09/10/21 15:53

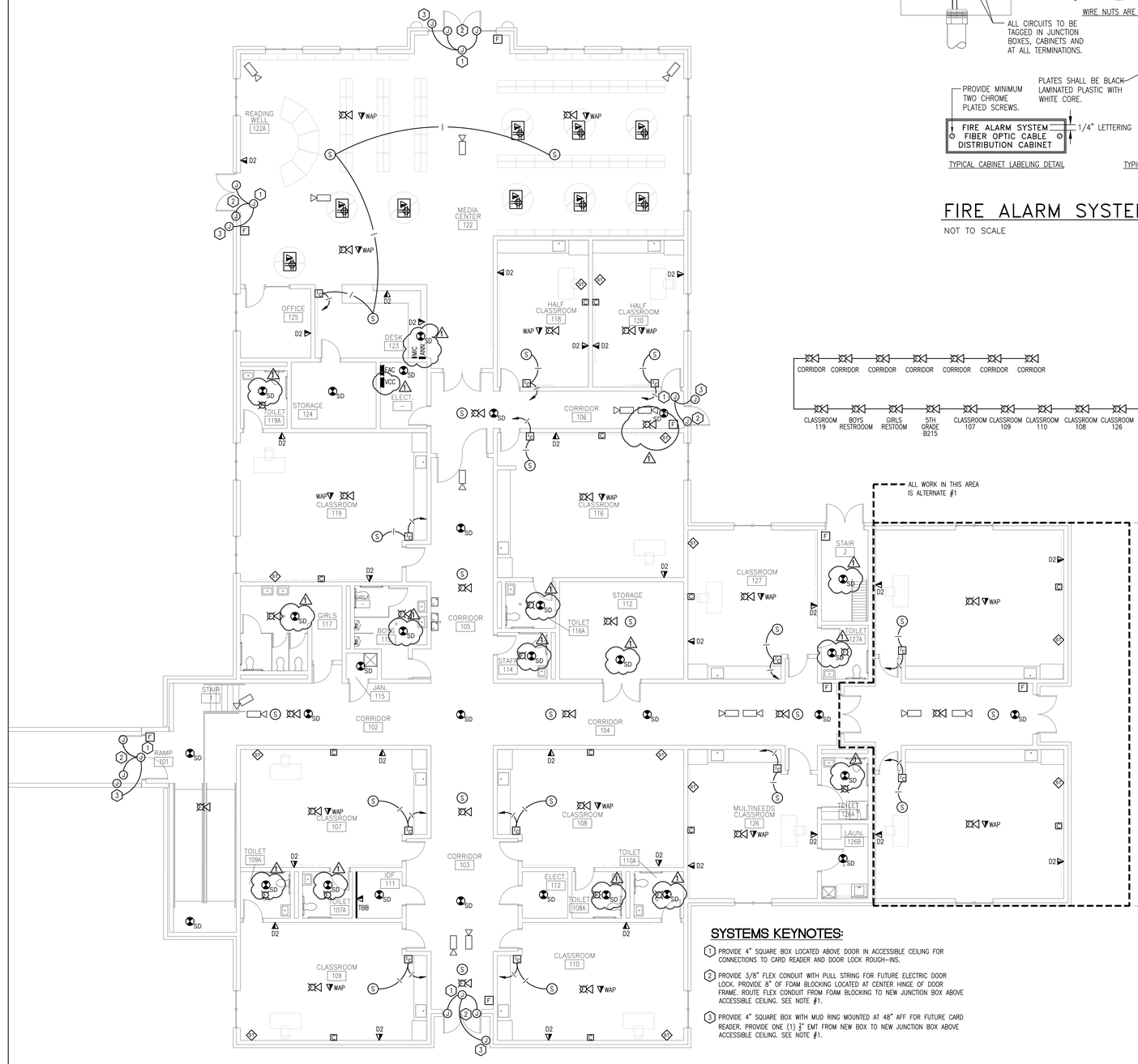

1 SYSTEMS PLAN

1/8" = 1'-0"

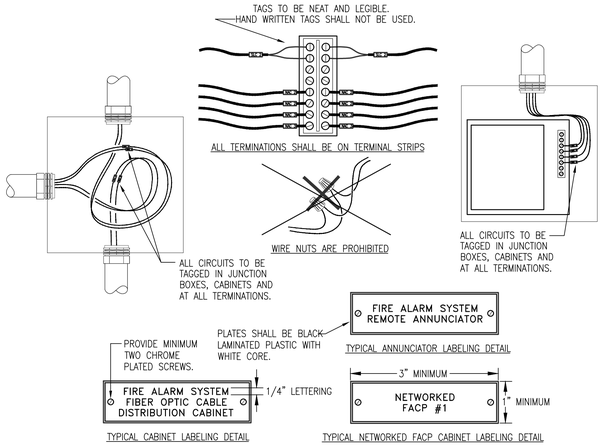

FIRE ALARM SYSTEM LABELING DETAIL

NOT TO SCALE

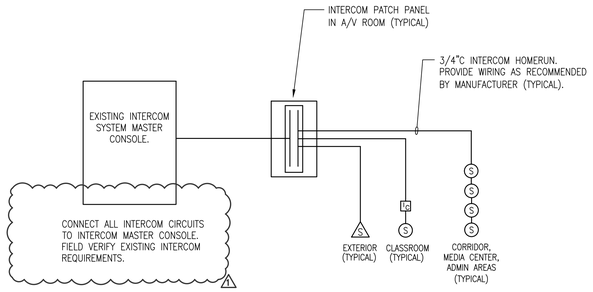

INTERCOM RISER DIAGRAM

NOT TO SCALE

INTERCOM SYSTEM GENERAL NOTES:

1. VERIFY EXACT NUMBER OF DEVICES FROM FLOOR PLAN, NOT RISER DIAGRAM.

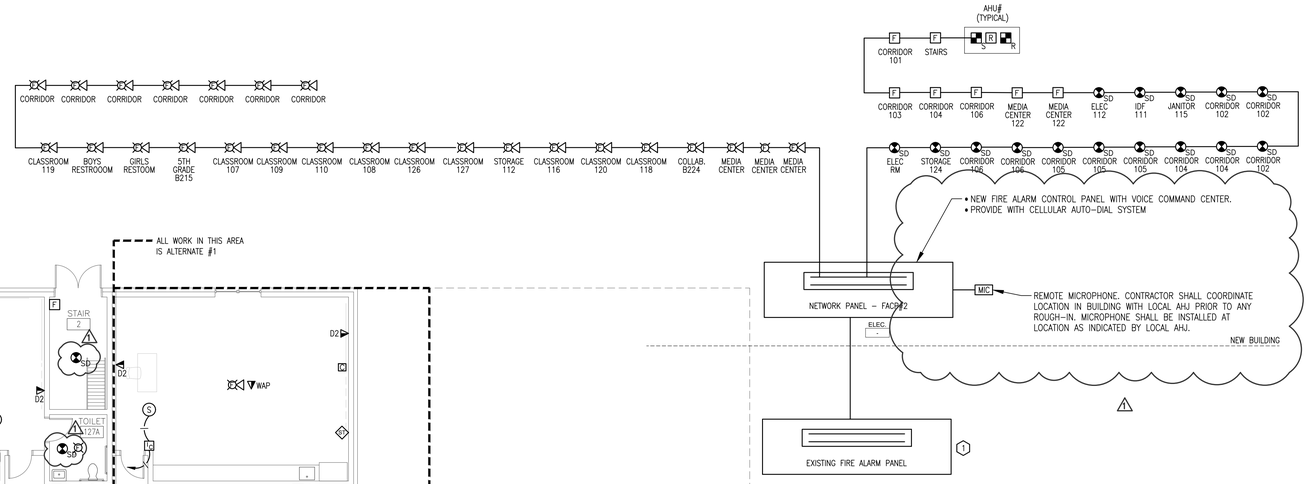

PARTIAL FIRE ALARM SYSTEM RISER DIAGRAM - NEW BUILDING ADDITION

NOT SO SCALE

FIRE ALARM SYSTEM GENERAL NOTES:

a. VERIFY EXACT NUMBER OF DEVICES FROM FLOOR PLAN, NOT RISER DIAGRAM.

b. THE NAC CIRCUITS ARE SHOWN DIAGRAMMATIC. MAXIMUM NUMBER OF DEVICES ON ANY CIRCUIT IS LIMITED. PROVIDE ADDITIONAL HARDWARE AS REQUIRED.

c. SLC LOOP TO CONNECT ALL FIRE ALARM SYSTEM DEVICES FROM FLOOR PLANS. PROVIDE ADDITIONAL LOOP(S) AS REQUIRED.

d. BATTERY CABINETS AND NAC EXPANDERS SHALL BE LOCATED BELOW OR ADJACENT TO FIRE ALARM CONTROL PANEL.

e. ALL FIRE ALARM WORK SHALL BE PERFORMED BY QUALIFIED PERSONNEL AS DEFINED IN NFPA 72 (LATEST EDITION). SHOP DRAWINGS SHALL COMPLY WITH NFPA 72 SECTION.

f. SPLICING OF FIRE ALARM WIRING IS STRICTLY PROHIBITED.

g. UPON PROJECT COMPLETION THE CAMPUS WIDE FIRE ALARM SYSTEM SHALL BE RE-CERTIFIED AND TESTED. PROVIDE WITH A RECORD OF COMPLETION AS REQUIRED IN NFPA 72.

h. THE FIRE ALARM INSTALLER SHALL BE LICENSED AS A CERTIFIED FIRE ALARM CONTRACTOR. THE CONTRACTOR MUST HAVE A NICET LEVEL III TECHNICIAN IN A POSITION OF RESPONSIBILITY, AND THE LICENSE SHALL BE ISSUED IN THE NAME OF THE CERTIFICATE HOLDER AND THE CONTRACTOR. TECHNICIANS WORKING FOR THE CERTIFIED CONTRACTOR MUST HOLD A CURRENT NICET LEVEL II, OR EQUIVALENT, CERTIFICATION. CONTRACTORS WISHING TO BID ON FIRE ALARM WORK SHALL SHOW EVIDENCE AT THE PRE-BID CONFERENCE THAT HE/SHE MEETS THE CERTIFICATION REQUIREMENTS AND HOLD A PERMIT ISSUED BY THE STATE OF ALABAMA FIRE MARSHAL.

i. THE FIRE ALARM SYSTEM SHALL BE MONITORED BY AN APPROVED SUPERVISING STATION IN ACCORDANCE WITH NFPA 72. AUTOMATIC TELEPHONE DIALING DEVICES USED TO TRANSMIT AN EMERGENCY ALARM SHALL NOT BE CONNECTED TO ANY FIRE DEPARTMENT TELEPHONE NUMBER UNLESS APPROVED BY THE FIRE CHIEF.

SYSTEMS KEYNOTES:

1. PROVIDE 4" SQUARE BOX LOCATED ABOVE DOOR IN ACCESSIBLE CEILING FOR CONNECTIONS TO CARD READER AND DOOR LOCK ROUGH-INS.
2. PROVIDE 3/8" FLEX CONDUIT WITH PULL STRING FOR FUTURE ELECTRIC DOOR LOCK. PROVIDE 8" OF FOAM BLOCKING LOCATED AT CENTER HINGE OF DOOR FRAME. ROUTE FLEX CONDUIT FROM FOAM BLOCKING TO NEW JUNCTION BOX ABOVE ACCESSIBLE CEILING. SEE NOTE #1.
3. PROVIDE 4" SQUARE BOX WITH MUD RING MOUNTED AT 48" AFF FOR FUTURE CARD READER. PROVIDE ONE (1) 3/4" EMT FROM NEW BOX TO NEW JUNCTION BOX ABOVE ACCESSIBLE CEILING. SEE NOTE #1.

FIRE ALARM RISER DIAGRAM KEYNOTES:

1. UPGRADE EXISTING FIRE ALARM CONTROL PANEL AS REQUIRED TO PROVIDE NETWORK COMMUNICATION BETWEEN NEW FIRE ALARM CONTROL PANEL AND EXISTING FIRE ALARM CONTROL PANEL. EXISTING PANEL IS A HONEYWELL FIRE-LITE ALARMS MS-9200UDLS ADDRESSABLE FIRE ALARM CONTROL PANEL. PROVIDE 2" CONDUIT BETWEEN EXISTING PANEL AND NEW PANEL.

H.M. YONGE & ASSOCIATES, INC.
CONSULTING ENGINEERS // EST. 1988
51 EAST GREGORY STREET
PENSACOLA, FLORIDA 32502
PHONE: (850)434-2661
253 ST. ANTHONY STREET
MOBILE, ALABAMA 36603
PHONE: (251)690-7446

LATHAN ARCHITECTS
LATHAN • BRYANT • CALMA

ADDITION AND RENOVATION FOR
FLOMATON ELEMENTARY SCHOOL
PACKAGE A: MEDIA CENTER AND CLASSROOM ADDITION
1634 POPLAR STREET, FLOMATON, AL 36441
ESCAMBIA COUNTY BOARD OF EDUCATION

ALABAMA LICENSED No. 26807 PROFESSIONAL ENGINEER JOHN THOMAS VARGHESE

SHEET TITLE:
SYSTEMS PLAN

PROJ. MGR.:	A. VARGHESE
DRAWN:	J. COOK
DATE:	FEBRUARY 15, 2022
REVISIONS	

JOB NO. 21-04A

SHEET NO:
E3.1

0 1" 2"

AIR HANDLING UNIT EQUIPMENT ELECTRICAL SCHEDULE

MARK	TYPE OF EQUIPMENT	VOLTAGE	MCA	FEEDER	DISCONNECT	NOTES
AHU#1A	AIR HANDLING UNIT	208/3	45	4#8, 1#10G, 1"C	60/3 NEMA 1	1
AHU#1B	AIR HANDLING UNIT	208/3	45	4#8, 1#10G, 1"C	60/3 NEMA 1	1
AHU#2	AIR HANDLING UNIT	208/3	44	4#6, 1#10G, 1"C	60/3 NEMA 1	1
AHU#3	AIR HANDLING UNIT	208/3	45	4#6, 1#10G, 1"C	60/3 NEMA 1	1
AHU#4	AIR HANDLING UNIT	208/3	45	4#6, 1#10G, 1"C	60/3 NEMA 1	1
AHU#5	AIR HANDLING UNIT	208/3	45	4#6, 1#10G, 1"C	60/3 NEMA 1	1
AHU#6	AIR HANDLING UNIT	208/3	30	4#10 1#10G, 1/2"C	60/3 NEMA 1	1
AHU#7	AIR HANDLING UNIT	208/3	45	4#6, 1#10G, 1"C	60/3 NEMA 1	1
AHU#8	AIR HANDLING UNIT	208/3	30	4#10 1#10G, 1/2"C	60/3 NEMA 1	1
AHU#9	AIR HANDLING UNIT	208/3	30	4#10 1#10G, 1/2"C	60/3 NEMA 1	1
AHU#10	AIR HANDLING UNIT	208/3	45	4#6, 1#10G, 1"C	60/3 NEMA 1	1
AHU#11	AIR HANDLING UNIT	208/3	44	4#6, 1#10G, 1"C	60/3 NEMA 1	1
AHU#12	AIR HANDLING UNIT	208/3	44	4#6, 1#10G, 1"C	60/3 NEMA 1	1

1

HEAT PUMP UNIT EQUIPMENT ELECTRICAL SCHEDULE

MARK	TYPE OF EQUIPMENT	VOLTAGE	MCA	FEEDER	DISCONNECT	NOTES
HPU#1A	HEAT PUMP UNIT	208/3	18	4#10, 1#10G, 3/4"C	30/3 NEMA 3R	1
HPU#1B	HEAT PUMP UNIT	208/3	18	4#10, 1#10G, 3/4"C	30/3 NEMA 3R	1
HPU#2	HEAT PUMP UNIT	208/3	18	4#12, 1#12G, 1/2"C	30/3 NEMA 3R	1
HPU#3	HEAT PUMP UNIT	208/3	18	4#12, 1#12G, 1/2"C	30/3 NEMA 3R	1
HPU#4	HEAT PUMP UNIT	208/3	18	4#12, 1#12G, 1/2"C	30/3 NEMA 3R	1
HPU#5	HEAT PUMP UNIT	208/3	21	4#12, 1#12G, 1/2"C	30/3 NEMA 3R	1
HPU#6	HEAT PUMP UNIT	208/3	13	4#12, 1#12G, 1/2"C	30/3 NEMA 3R	1
HPU#7	HEAT PUMP UNIT	208/3	18	4#12, 1#12G, 1/2"C	30/3 NEMA 3R	1
HPU#8	HEAT PUMP UNIT	208/3	13	4#12, 1#12G, 1/2"C	30/3 NEMA 3R	1
HPU#9	HEAT PUMP UNIT	208/3	13	4#12, 1#12G, 1/2"C	30/3 NEMA 3R	1
HPU#10	HEAT PUMP UNIT	208/3	21	4#12, 1#12G, 1/2"C	30/3 NEMA 3R	1
HPU#11	HEAT PUMP UNIT	208/3	18	4#12, 1#12G, 1/2"C	30/3 NEMA 3R	1
HPU#12	HEAT PUMP UNIT	208/3	18	4#12, 1#12G, 1/2"C	30/3 NEMA 3R	1

1

EQUIPMENT SCHEDULE NOTES:

1. COORDINATE WITH THE MECHANICAL CONTRACTOR TO ENSURE ALL DISCONNECTS AND/OR VFD'S ARE PROVIDED AS REQUIRED.

EQUIPMENT COORDINATION GENERAL NOTES:

1. COORDINATE WITH THE MECHANICAL CONTRACTOR TO ENSURE ALL DISCONNECTS AND/OR VFD'S ARE PROVIDED AS REQUIRED.
2. THE ELECTRICAL CONTRACTOR SHALL PROVIDE INTERLOCKING CONNECTIONS FOR ALL HVAC EQUIPMENT AS REQUIRED. REFER TO THE MECHANICAL SCHEDULES FOR EXACT INTERLOCKING INFORMATION.
3. ALL EXHAUST FAN INTERLOCKS SHALL BE PROVIDED BY THE ELECTRICAL CONTRACTOR. REFER TO THE EXHAUST FAN SCHEDULE FOR INTERLOCKING REQUIREMENTS.
4. THE ELECTRICAL CONTRACTOR SHALL COORDINATE THE EXACT LOCATION, WIRING AND CONNECTION OF ALL EQUIPMENT WITH THE EQUIPMENT INSTALLER PRIOR TO INSTALLATION.
5. THE ELECTRICAL CONTRACTOR SHALL FURNISH AND INSTALL A 4" SQUARE OUTLET BOX WITH SINGLE GANG PLASTER RING FOR EACH THERMOSTAT. PLASTER RING SHALL BE MOUNTED IN A VERTICAL ORIENTATION. 56" A.F.F. TO CENTER UNLESS NOTED OTHERWISE. THE ELECTRICAL CONTRACTOR SHALL FURNISH AND INSTALL A 3/4" CONDUIT FROM THERMOSTAT OUTLET BOX UP IN WALL TO 6" ABOVE CEILING HEIGHT AND OUT OF WALL. EXTEND CONDUIT TO AREA WITH ACCESSIBLE CEILING. LABEL CONDUIT ABOVE ACCESSIBLE CEILING WITH SERVED THERMOSTAT LOCATION. CONDUIT SHALL HAVE NYLON INSULATING BUSHING ON EACH END. PROVIDE PULL STRING IN CONDUIT. REFER TO MECHANICAL DRAWINGS FOR THERMOSTAT LOCATIONS. MOUNT UNIT HEATER THERMOSTATS AS REQUIRED.
6. THE ELECTRICAL CONTRACTOR SHALL FURNISH AND INSTALL A DEDICATED, 20 AMP, 120 VOLT CIRCUIT FOR EACH HVAC CONTROL PANEL. REFER TO MECHANICAL DRAWINGS FOR HVAC CONTROL PANEL LOCATIONS.
7. THE ELECTRICAL CONTRACTOR SHALL COORDINATE THE EXACT LOCATION OF ALL EQUIPMENT SITE SWITCHES PRIOR TO INSTALLATION.
8. ALL DISCONNECTS FOR EQUIPMENT SHALL BE MOUNTED SECURELY TO THE FLOOR OR STRUCTURE. THE ELECTRICAL CONTRACTOR SHALL FURNISH AND INSTALL UNISTRUT AND MOUNTING HARDWARE AS REQUIRED TO MOUNT THE DISCONNECTS. ALL EXTERIOR DISCONNECTS SHALL BE NEMA-3R.
9. CIRCUIT BREAKERS SERVING EQUIPMENT ARE BASIS OF DESIGN ONLY. EXACT CIRCUIT BREAKER AND CONDUCTOR SIZES SHALL BE COORDINATED WITH ACTUAL EQUIPMENT BEING INSTALLED PRIOR TO ORDERING OF PANELBOARD. ANY COST INCREASE ASSOCIATED WITH INCREASED CIRCUIT REQUIREMENTS SHALL BE THE RESPONSIBILITY OF THE EQUIPMENT INSTALLER. ELECTRICIAN SHALL SIZE CIRCUIT BREAKERS, CONDUCTORS, CONDUITS, AND DISCONNECTS IN ACCORDANCE WITH THE NATIONAL ELECTRIC CODE AND INDICATE THE APPROPRIATE CHANGES ON AS-BUILT DOCUMENTS.
10. IN ALL MECHANICAL ROOMS, COORDINATE WITH THE MECHANICAL CONTRACTOR TO ENSURE CODE REQUIRED CLEARANCES AND WORKING SPACES ARE MAINTAINED AT ALL ELECTRICAL EQUIPMENT.

REFERENCE TYPICAL EXTERIOR AC/HP ELECTRICAL CONNECTION DETAIL FOR EXTERIOR DISCONNECT MOUNTING AND CONNECTION REQUIREMENTS FOR ALL EXTERIOR HVAC EQUIPMENT.

SWITCHBOARD MDP SCHEDULE

NEMA 1, FLOOR MOUNT — 1200A M.B. GFP 208Y/120V 3ø 4W** — SERVICE ENTRANCE RATED — XX SCA AVAILABLE CALCULATED ON XX — XX AIC RATING

CKT NO.	LOAD DESCRIPTION	BREAKER POLE	BREAKER AMP	KVA		KVA	BREAKER AMP	BREAKER POLE	LOAD DESCRIPTION	CKT NO.
1										2
3	PANEL MP1	3	700	186.2	82		350	3	PANEL MP2	4
5										6
7										8
9	PANEL 2P1	3	200	55.2				3	PREPARED SPACE	10
11										12
13										14
15	PREPARED SPACE	3						3	PREPARED SPACE	16
17										18
19										20
21	PREPARED SPACE	3						3	PREPARED SPACE	22
23										24
25										26
27	PREPARED SPACE	3						3	PREPARED SPACE	28
29										30

CONNECTED LOAD 323.4 KVA

* PROVIDE PHENOLIC LABEL AFFIXED TO PANEL INDICATING THIS VALUE ALONG WITH THE DATE OF THE INSTALLATION.
** PROVIDE ELECTRONIC TRIP CIRCUIT BREAKER WITH MANUAL OFF INSTANTANEOUS SETTING AND ENERGY REDUCING MAINTENANCE SWITCH.

PANEL MP1 SCHEDULE

NEMA 1, SURFACE MOUNT — 800A M.L.O. 208Y/120V 3ø 4W — XX AIC RATING

CKT NO.	LOAD DESCRIPTION	BREAKER POLE	BREAKER AMP	KVA		KVA	BREAKER AMP	BREAKER POLE	LOAD DESCRIPTION	CKT NO.
1										2
3	AHU #1A	3	45	15.5	15.8	45	3		AHU #2	4
5										6
7										8
9	AHU #3	3	45	16.1	16.1	45	3		AHU #4	10
11										12
13										14
15	AHU #5	3	45	16.1	10.8	30	3		AHU #6	16
17										18
19										20
21	AHU #7	3	45	16.1	10.8	30	3		AHU #8	22
23										24
25										26
27	AHU #9	3	30	10.8	16.1	45	3		AHU #10	28
29										30
31										32
33	AHU #11	3	45	15.8	15.8	45	3		AHU #12	34
35										36
37										38
39	AHU #1B	3	45	15.5				3	PREPARED SPACE	40
41										42

CONNECTED LOAD 186.2 KVA

* PROVIDE LOCKABLE CIRCUIT BREAKER
(G) – GFCI BREAKER

1

PANEL MP2 SCHEDULE

NEMA 1, SURFACE MOUNT — 400A M.L.O. 208Y/120V 3ø 4W — XX AIC RATING

CKT NO.	LOAD DESCRIPTION	BREAKER POLE	BREAKER AMP	KVA		KVA	BREAKER AMP	BREAKER POLE	LOAD DESCRIPTION	CKT NO.
1										2
3	HPU #1A	3	30	5.3	6.5	30	3		HPU #2	4
5										6
7										8
9	HPU #3	3	30	6.5	6.5	30	3		HPU #4	10
11										12
13										14
15	HPU #5	3	35	7.6	4.7	20	3		HPU #6	16
17										18
19										20
21	HPU #7	3	30	6.5	4.7	20	3		HPU #8	22
23										24
25										26
27	HPU #9	3	20	4.7	7.6	35	3		HPU #10	28
29										30
31										32
33	HPU #11	3	30	6.5	6.5	30	3		HPU #12	34
35										36
37										38
39	HPU #1B	3	30	5.3				3	PREPARED SPACE	40
41										42

CONNECTED LOAD 82 KVA

* PROVIDE LOCKABLE CIRCUIT BREAKER
(G) – GFCI BREAKER

1

PANEL 2P1 SCHEDULE

NEMA 1, SURFACE MOUNT — 225A M.L.O. 208Y/120V 3ø 4W — 10,000 AIC RATING

CKT NO.	LOAD DESCRIPTION	BREAKER POLE	BREAKER AMP	KVA		BREAKER AMP	BREAKER POLE	LOAD DESCRIPTION	CKT NO.
1	LIGHTS MEDIA CENTER, RM 124,125	1	20	1.7	1.8	20	1	CORRIDOR LIGHTS	2
3	LIGHTS ROOMS 112–117, 127	1	20	1.8	1.6	20	1	LIGHTS ROOMS 107–110, 126	4
5	ATTIC LIGHTS	1	20	1.0	0.25	20	1	EXTERIOR LIGHTS	6
7	MEDIA CENTER RECEPTS	1	20	1.2	1.2	20	1	MEDIA CENTER FLOORBOXES	8
9	MEDIA CENTER FLOORBOXES	1	20	1.2	1.2	20	1	MEDIA CENTER FLOORBOXES	10
11	MEDIA CENTER WATER COOLER	1	20	1.0	1.0	20	1	MEDIA CENTER WATER COOLER	12
13	OFFICE 125 RECEPTS	1	20	0.8	0.6	20	1	MEDIA CENTER DESK	14
15	CLASSROOM 118 RECEPTS	1	20	1.4	1.2	20	1	CLASSROOM 118 RECEPTS	16
17	CLASSROOM 120 RECEPTS	1	20	1.2	1.2	20	1	CLASSROOM 120 RECEPTS	18
19	ATTIC RECEPTACLES	1	20	0.8	1.6	20	1	CLASSROOM 119 RECEPTS	20
21	CLASSROOM 119 RECEPTS	1	20	1.4	1.4	20	1	CLASSROOM 116 RECEPTS	22
23	CLASSROOM 116 RECEPTS	1	20	1.4	1.4	20	1	CLASSROOM 127 RECEPTS	24
25	CLASSROOM 127 RECEPTS	1	20	1.2	1.0	20	1	CORRIDOR 105 WATER COOLER	26
27	CORRIDOR 105 WATER COOLER	1	20	1.0	1.8	20	1	CLASSROOM 107 RECEPTS	28
29	CLASSROOM 107 RECEPTS	1	20	1.4	1.6	20	1	CLASSROOM 109 RECEPTS	30
31	CLASSROOM 109 RECEPTS	1	20	1.2	1.2	20	1	CLASSROOM 108 RECEPTS	32
33	CLASSROOM 108 RECEPTS	1	20	1.6	1.4	20	1	CLASSROOM 126 RECEPTS	34
35	CLASSROOM 126 RECEPTS	1	20	1.4	5.0	30	2	LAUNDRY RM 126 RECEPTACLE	36
37	LAUNDRY RM 126 RECEPTACLE	2	30	5.0					38
39					0.5	20	1	FANS ROOMS 113,114,115,117	40
41	IDF RECEPTACLES	1	20	0.6	0.6	20	1	ALTERNATE CLASSROOM RECEPTS 129	42
43	ALTERNATE CLASSROOM RECEPTS 128	1	20	1.4	1.4	20	1	ALTERNATE CLASSROOM RECEPTS 129	44
45	ALTERNATE CLASSROOM RECEPTS 128	1	20	0.6		20	1	SPARE	46
47	SPARE	1	20			20	1	SPARE	48
49	SPARE	1	20			20	1	SPARE	50
51	SPARE	1	20			20	1	SPARE	52
53	SPARE	1	20			20	1	SPARE	54

CONNECTED LOAD 55.2 KVA

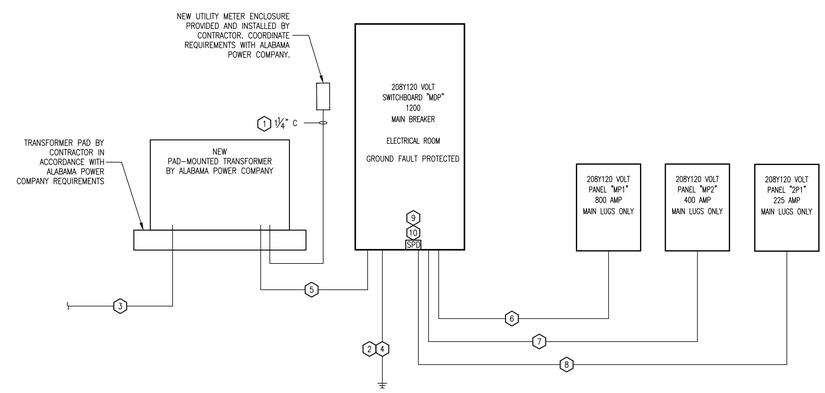

SINGLE LINE DIAGRAM

NOT SO SCALE

THE ELECTRICAL CONTRACTOR SHALL FIELD MARK ALL ELECTRICAL SERVICE EQUIPMENT WITH A CONSPICUOUS AND PERMANENT LABEL THAT INDICATES THE AVAILABLE FAULT CURRENT AS FOLLOWS PER NEC 110.24:

"Panel XX"
"Maximum available fault current = ##,### Amps"
"Month DD, Year"

THE LABEL SHOULD BE OF SUFFICIENT DURABILITY TO WITHSTAND THE ENVIRONMENT INVOLVED.

THE ELECTRICAL CONTRACTOR SHALL FIELD MARK ALL PANEL BOARDS IN AREA OF WORK THAT ARE TO REMAIN TO INDICATE ORIGIN OF POWER SUPPLY.

NOTE: ALL EQUIPMENT THAT IS LIKELY TO REQUIRE EXAMINATION, ADJUSTMENT, SERVICING, OR MAINTENANCE WHILE ENERGIZED SHALL BE PROVIDED WITH A LABEL IN ACCORDANCE WITH NEC 110.16. THE EQUIPMENT MANUFACTURER SHALL PROVIDE AN ARC FLASH HAZARD ANALYSIS TO DETERMINE THE LEVEL OF PERSONAL PROTECTIVE EQUIPMENT (PPE) REQUIRED FOR EACH PIECE OF EQUIPMENT. LABEL SHALL INCLUDE:

1. AT LEAST ONE OF THE FOLLOWING:
   A. AVAILABLE INCIDENT ENERGY AND THE CORRESPONDING WORKING DISTANCE
   B. MINIMUM ARC RATING OF CLOTHING
   C. REQUIRED LEVEL OF PPE
   D. HIGHEST HAZARD/RISK CATEGORY (HRC) FOR THE EQUIPMENT
2. NOMINAL SYSTEM VOLTAGE
3. ARC FLASH BOUNDARY

ELECTRICAL CONTRACTOR SHALL COORDINATE WITH MECHANICAL CONTRACTOR TO ENSURE THE OVER CURRENT PROTECTION FOR THE SPECIFIC HVAC EQUIPMENT MEETS THE MANUFACTURER AND THE NATIONAL ELECTRICAL CODE REQUIREMENTS.

THE ELECTRICAL CONTRACTOR SHALL FIELD MARK ALL PANEL BOARDS WITH ORIGIN OF POWER SUPPLY. VIA MECHANICALLY FASTENED PHENOLIC LABEL.

SINGLE LINE DIAGRAM KEYNOTES:

1. 1 1/4" CONDUIT WITH PULL STRING. THE ELECTRICAL CONTRACTOR SHALL COORDINATE WITH THE UTILITY AND FURNISH METERING COMPONENTS AS REQUIRED.
2. GROUNDING ELECTRODE SYSTEM SHALL BE IN ACCORDANCE WITH NEC 2014 ARTICLE 250.
3. PRIMARY CONDUIT AND CONDUCTORS BY LOCAL UTILITY.
4. PROVIDE 1#3/0 BARE COPPER CONDUCTOR TO THE GROUNDING ELECTRODE SYSTEM. PROVIDE TWO COPPER GLAD 3/4"X10' GROUND RODS SPACED 10FT APART. PROVIDE HIGH COMPRESSION DIRECT BURIAL HYGROUND CONNECTORS. THE GROUNDING ELECTRODE SYSTEM SHALL BE INSTALLED IN ACCORDANCE WITH NEC ARTICLE #250.50. BOND TO BUILDING STEEL, GAS PIPING, WATER PIPING, AND REBAR SYSTEMS.
5. 1200A SERVICE. PROVIDE 4 RUNS OF 4-#350 COPPER CONDUCTORS IN 3" SCHEDULE 40 PVC CONDUIT (EACH).
6. ~~PROVIDE 2 RUNS OF 4-#500, 1#1/0G, IN 3-1/2"~~ CONDUIT (EACH).
7. PROVIDE 4-#500, 1#3G, IN 3-1/2" CONDUIT.
8. PROVIDE 4-#3/0, 1#6G, IN 2-1/2" CONDUIT.
9. ~~PROVIDE EXTERNAL SERVICE ENTRANCE RATED, CATEGORY~~ C SURGE PROTECTION DEVICE, 10-MODE, 240kA PER PHASE.
10. DISTRIBUTION SECTIONS OF SWITCHBOARD TO BE PROVIDED WITH FACTORY INSTALLED METERING, EQUAL TO EATON POWER XPERT MULTI-POINT METER. ALL BRANCH CIRCUIT BREAKERS AND MAIN SERVICE CIRCUIT BREAKER (SWITCHBOARD MDP) SHALL BE METERED INDIVIDUALLY. METERING SHALL RECORD ENERGY USAGE A MINIMUM OF EVERY 15 MINUTES AND BE REPORTED AT LEAST HOURLY, DAILY, MONTHLY, AND ANNUALLY. THIS DATA SHALL BE STORED FOR A MINIMUM OF 36 MONTHS. ALL METERING INFORMATION TO BE COLLECTED AND STORED BY OWNER VIA OWNER'S BUILDING MANAGEMENT SYSTEM COORDINATE REQUIREMENTS WITH OWNER. METER TO BE PROVIDED WITH NETWORK CAPABILITY. CONTRACTOR TO PROVIDE ONE CAT6 CABLE FROM METER TO TELECOM ROOM 116A WITH 10FT OF SLACK COILED AT EACH END, CABLE SHALL BE TERMINATED BY PROVIDED BY CONTRACTOR. METER MANUFACTURER TO PROVIDE OWNER COMMISSIONING AND TRAINING.

5

H.M. YONGE & ASSOCIATES, INC.
CONSULTING ENGINEERS // EST. 1988
51 EAST GREGORY STREET
PENSACOLA, FLORIDA 32502
PHONE: (850)434-2661
253 ST. ANTHONY STREET
MOBILE, ALABAMA 36603
PHONE: (251)690-7446

LATHAN ARCHITECTS
LATHAN • BRYANT • CALMA

ADDITION AND RENOVATION FOR
FLOMATON ELEMENTARY SCHOOL
PACKAGE A: MEDICA CENTER AND CLASSROOM ADDITION
1634 POPLAR STREET, FLOMATON, AL 36441
ESCAMBIA COUNTY BOARD OF EDUCATION

ALABAMA LICENSED No. 26807 PROFESSIONAL ELECTRICAL ENGINEER JOHN THOMAS VARGHESE III

SHEET TITLE:
ELECTRICAL PANEL AND EQUIPMENT SCHEDULES

PROJ. MGR.: A. VARGHESE
DRAWN: N. JOHNSON
DATE: FEBRUARY 15, 2022
REVISIONS

JOB NO. 21-04A
SHEET NO:
E4.0

0 1" 2"

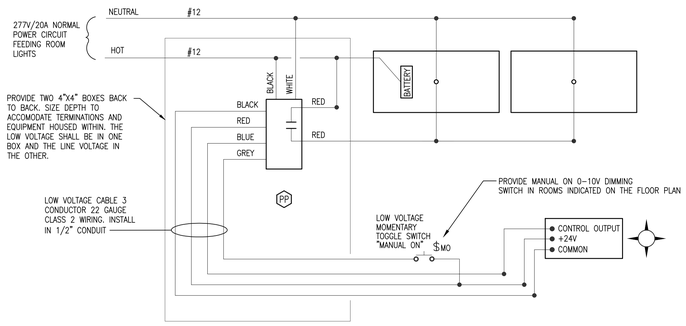

TYPICAL OCCUPANCY SENSOR WIRING DIAGRAM - CLASSROOMS

NOT TO SCALE

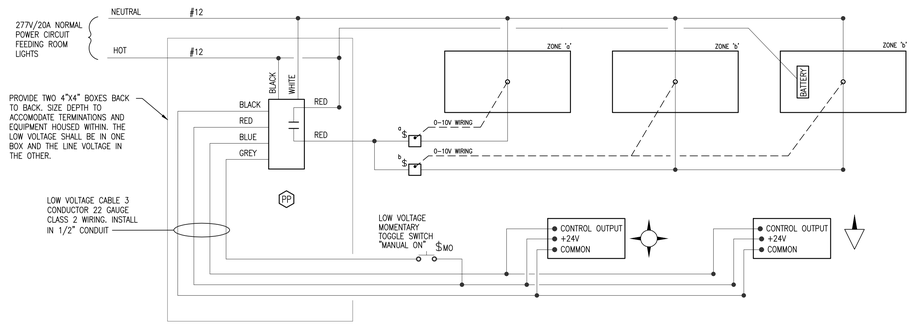

TYPICAL OCCUPANCY SENSOR WIRING DIAGRAM -MEDIA CENTER

NOT TO SCALE

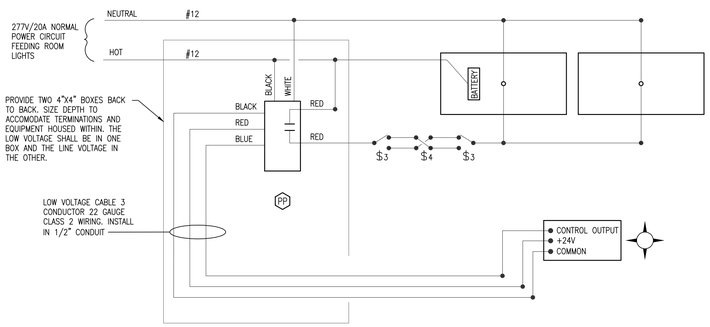

TYPICAL 3-WAY OCCUPANCY SENSOR WIRING DIAGRAM - CORRIDORS

NOT TO SCALE

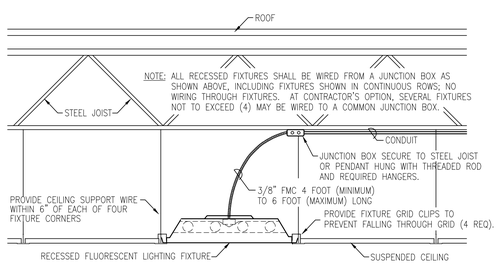

TYPICAL RECESSED FIXTURE INSTALLATION DETAIL

SCALE: NONE

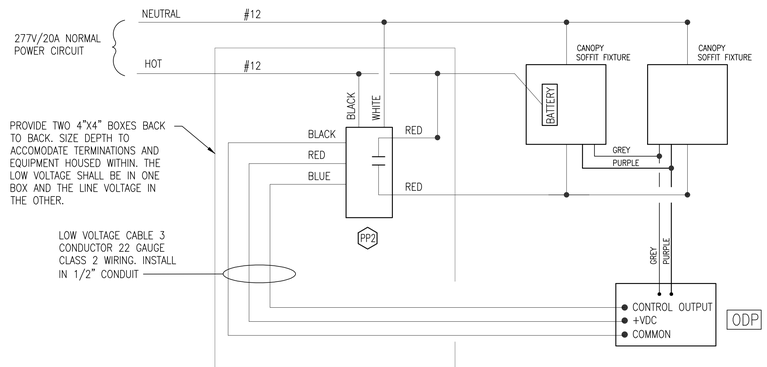

EXTERIOR FIXTURE CONTROL DIAGRAM

NOT TO SCALE

H.M. YONGE & ASSOCIATES, INC.
CONSULTING ENGINEERS / EST. 1988
51 EAST GREGORY STREET
PENSACOLA, FLORIDA 32502
PHONE: (850)434-2661
253 ST. ANTHONY STREET
MOBILE, ALABAMA 36603
PHONE: (251)690-7446

LATHAN ARCHITECTS
LATHAN • BRYANT • CALMA

ADDITION AND RENOVATION FOR

FLOMATON ELEMENTARY SCHOOL

PACKAGE A: MEDIA CENTER AND CLASSROOM ADDITION
1634 POPLAR STREET, FLOMATON, AL 36441
ESCAMBIA COUNTY BOARD OF EDUCATION

ALABAMA LICENSED No. 30097 PROFESSIONAL ENGINEER JOHN THOMAS VARGHESE

SHEET TITLE:
ELECTRICAL DETAILS

PROJ. MGR.:	A. VARGHESE
DRAWN:	J. COOK
DATE:	FEBRUARY 15, 2022
REVISIONS	

JOB NO. 21-04A

SHEET NO:

E4.1

0 1" 2"

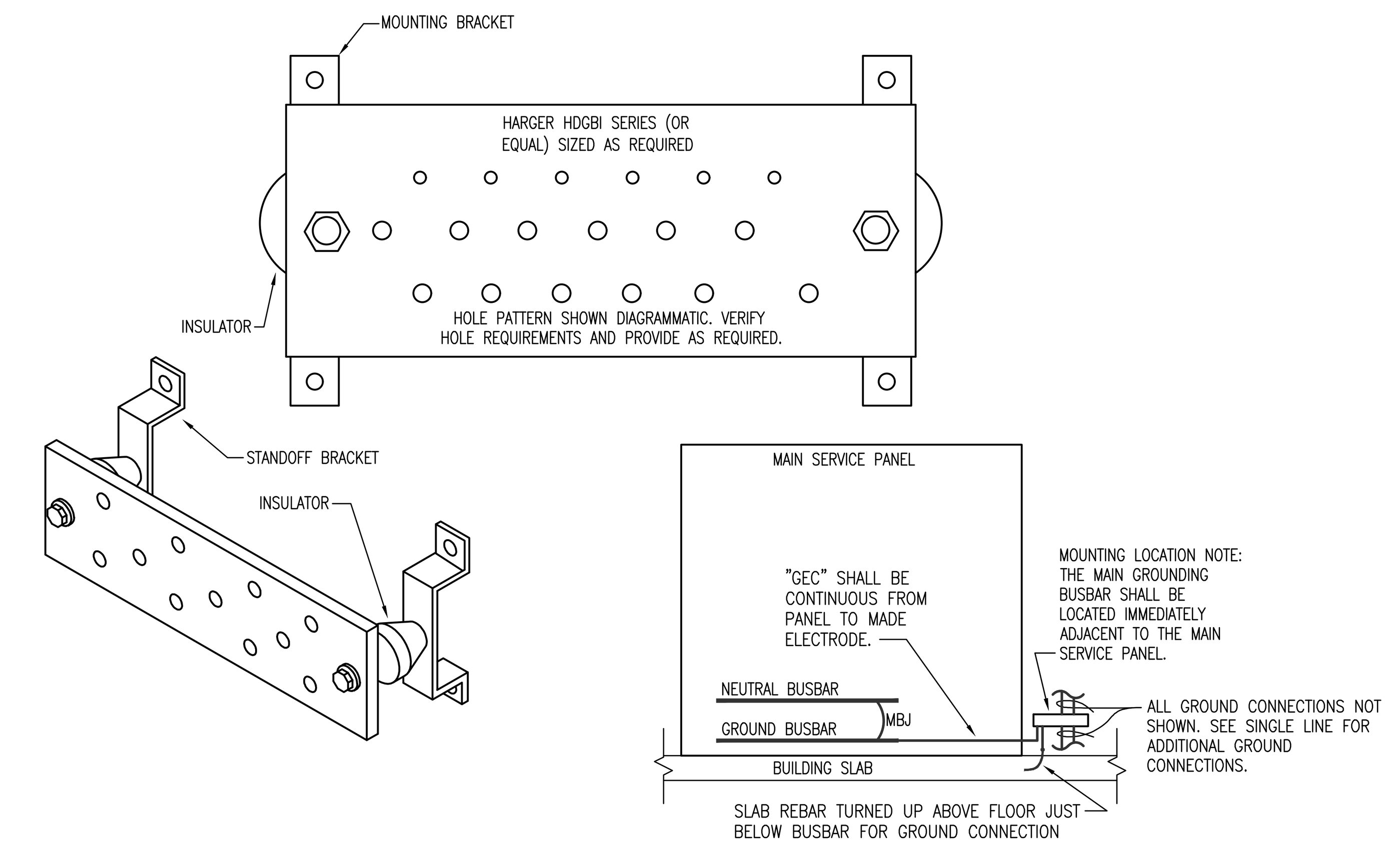

MAIN GROUNDING BUSBAR DETAIL

NOT TO SCALE

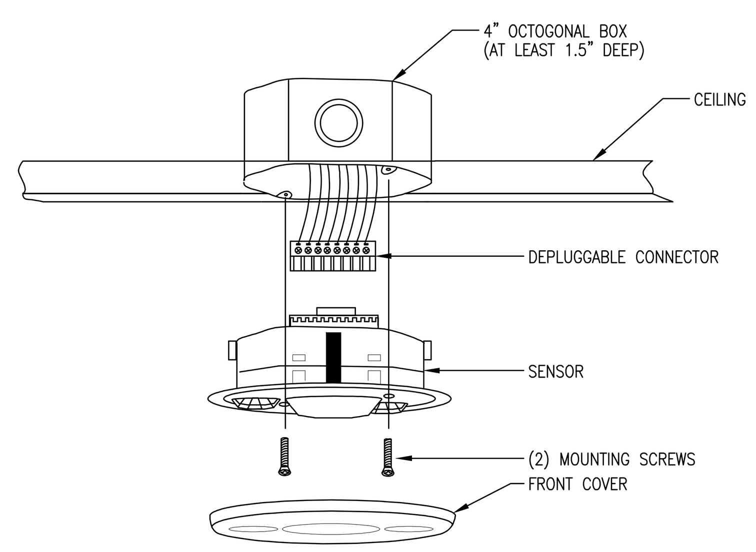

DUAL TECHNOLOGY MOUNTING DETAIL - CEILING MOUNT

NOT TO SCALE

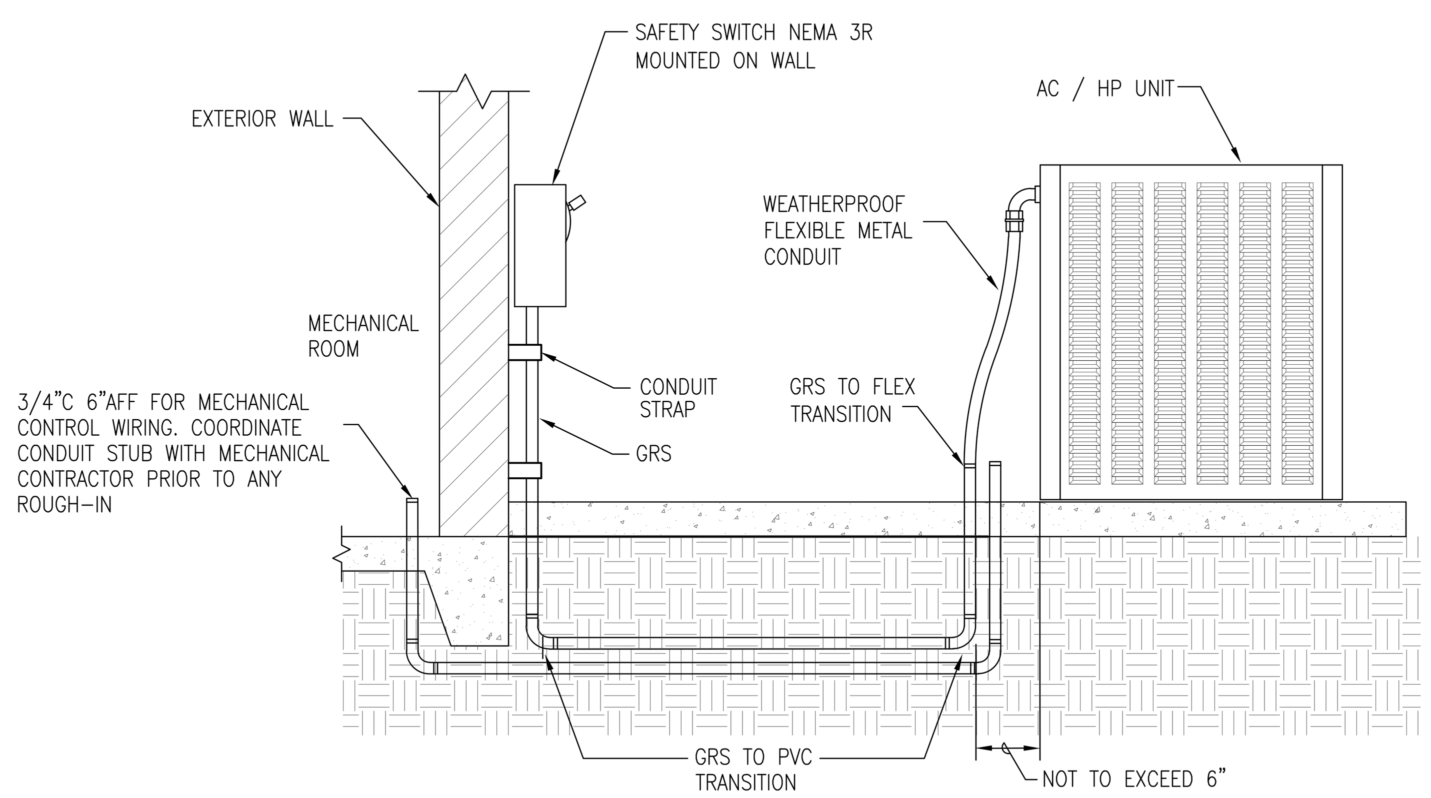

TYPICAL EXTERIOR AC/HP ELECTRICAL CONNECTION DETAIL

NOT TO SCALE

1

LATHAN ARCHITECTS
LATHAN • BRYANT • CALMA

ADDITION AND RENOVATION FOR
FLOMATON ELEMENTARY SCHOOL
PACKAGE A: MEDIA CENTER AND CLASSROOM ADDITION
1634 POPLAR STREET, FLOMATON, AL 36441
ESCAMBIA COUNTY BOARD OF EDUCATION

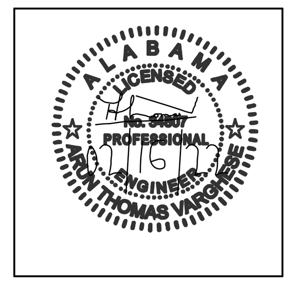

SHEET TITLE:
ELECTRICAL DETAILS

PROJ. MGR.: A. VARGHESE
DRAWN: J. COOK
DATE: FEBRUARY 15, 2022
REVISIONS

JOB NO. 21-04A
SHEET NO:
E4.2

0 1" 2"

H.M. YONGE & ASSOCIATES, INC.
CONSULTING ENGINEERS // EST. 1988
51 EAST GREGORY STREET PENSACOLA, FLORIDA 32502 PHONE: (850)434-2661
253 ST. ANTHONY STREET MOBILE, ALABAMA 36603 PHONE: (251)690-7446

JAC> M:\Jobs_Active\21107 Flomaton ES Addition and Renovation\21107E00.dwg 09/13/21 14:43