NEW JROTC FACILITY FOR
PLEASANT GROVE HIGH SCHOOL
100 SPARTAN DRIVE, PLEASANT GROVE, ALABAMA 35127
JEFFERSON COUNTY BOARD OF EDUCATION

JEFFERSON COUNTY BOARD OF EDUCATION	
MRS. CARITA VENABLE	PRESIDENT
MR. OSCAR S. MANN	VICE PRESIDENT
MR. RONNIE DIXON	BOARD MEMBER
MRS. DONNA J. PIKE	BOARD MEMBER
MR. EDDIE BROWN	BOARD MEMBER
DR. WALTER GONSOULIN, JR.	SUPERINTENDENT

OWNER JEFFERSON COUNTY BOARD OF EDUCATION
2100 18TH STREET SOUTH
BIRMINGHAM, ALABAMA 35209

ARCHITECT LATHAN ASSOCIATES ARCHITECTS, P.C.
300 CHASE PARK SOUTH,
SUITE 200
HOOVER, ALABAMA 35244
205-988-9112
EMAIL: RFI@LATHANASSOCIATES.COM

CIVIL LBYD
880 MONTCLAIR RD #600
BIRMINGHAM, ALABAMA 35213
205-251-4500
CONTACT: CHRIS HARKINS

MECHANICAL / PLUMBING DEWBERRY
2 RIVERCHASE OFFICE PLAZA, SUITE 205
HOOVER, ALABAMA 35244
205-988-2069
CONTACT: WADE STEWART & SCOTT CARLISLE

STRUCTURAL STRUCTURAL DESIGN GROUP
300 CHASE PARK SOUTH, SUITE 125
HOOVER, ALABAMA 35244
205-824-5200
CONTACT: CRAIG WINN

ELECTRICAL STEWART ENGINEERING
P.O. BOX 2233
ANNISTON ALABAMA 36202
256-237-0891
CONTACT: SHAWN CRAWFORD

GEOTECHNICAL BHATE GEOSCIENCES
5217 5TH AVENUE SOUTH
BIRMINGHAM, ALABAMA 35212
205-591-7062
CONTACT: CHUCK BURGIN

PSCA # 9324

DRAWING INDEX (SET - 53 TOTAL SHEETS)

GENERAL (2 SHEETS)

T1.0 - TITLE AND INDEX
LS1.1 - LIFE SAFETY PLAN

CIVIL DRAWINGS (9 SHEETS)

C0.1 - CIVIL NOTES
C1.0 - DEMOLITION PLAN BASE BID
C2.0 - LAYOUT PLAN BASE BID
C3.0 - GRADING AND DRAINAGE PLAN BASE BID
C4.0 - UTILITY PLAN BASE BID
C5.0 - EROSION CONTROL PLAN BASE BID
C6.0 - LAYOUT, GRADING AND DRAINAGE PLAN ALTERNATE
C7.0 - DETAILS
C7.1 - EROSION CONTROL DETAILS

ARCHITECTURAL DRAWINGS (16 SHEETS)

A2.1 - FLOOR PLAN, LEGENDS AND DETAIL - BASE BID
A2.2 - ROOF PLAN, LEGENDS, AND DETAILS - BASE BID
A2.3 - DOOR AND WINDOW SCHEDULE, LEGENDS, AND DETAILS
A3.1 - BUILDING ELEVATIONS
A3.2 - BUILDING SECTIONS
A3.3 - WALL SECTIONS
A5.1 - ENLARGED TOILET PLANS, ELEVATIONS, LEGEND, AND DETAILS
A6.1 - INTERIOR ELEVATIONS AND DETAILS
A7.1 - REFLECTED CEILING PLAN, FINISH FLOOR PLAN, LEGENDS, AND DETAILS
A10.1 - FLOOR PLAN, AND LEGENDS - ALTERNATE
A10.2 - ROOF PLAN, LEGENDS, AND DETAILS - ALTERNATE
A10.3 - BUILDING ELEVATIONS - ALTERNATE
A10.4 - BUILDING SECTIONS - ALTERNATE
A10.5 - INTERIOR ELEVATIONS - ALTERNATE
A10.6 - DETAILS - ALTERNATE
A10.7 - REFLECTED CEILING PLAN, FINISH FLOOR PLAN AND LEGENDS - ALTERNATE

STRUCTURAL DRAWINGS (10 SHEETS)

S1.0 - GENERAL NOTES
S1.1 - GENERAL NOTES CONTINUED
S1.2 - TYPICAL DETAILS
S1.3 - TYPICAL DETAILS
S1.4 - TYPICAL DETAILS
S2.1 - FOUNDATION PLAN
S2.1B - ALTERNATE FOUNDATION PLAN
S2.2 - ROOF FRAMING PLAN
S2.2B - ALTERNATE ROOF FRAMING PLAN
S3.1 - SECTIONS AND DETAILS

PLUMBING DRAWINGS (4 SHEETS)

P0.01 - PLUMBING - SCHEDULES, NOTES, LEGENDS, & DETAILS
P0.02 - PLUMBING - RISERS
P1.01 - NON-PRESSURE - FLOOR PLANS
P1.02 - PRESSURE - FLOOR PLANS

MECHANICAL DRAWINGS (7 SHEETS)

M0.01 - HVAC - LEGENDS, SCHEDULES, AND NOTES
M0.02 - HVAC - CONTROLS AND DETAILS
M0.03 - HVAC - DETAILS
M0.04 - HVAC - DETAILS & OSA CALCULATIONS
M0.05 - HVAC - OSA CALCULATIONS
M1.01 - HVAC - FLOOR PLANS
M2.01 - PIPING - FLOOR PLANS

ELECTRICAL DRAWINGS (5 SHEETS)

E1.1 - SCHEDULES, SYMBOLS, AND NOTES
E2.1 - SITE PLAN AND SINGLE LINE DIAGRAM
E3.1 - FLOOR PLAN - LIGHTING
E4.1 - FLOOR PLAN - POWER
E5.1 - FLOOR PLAN - AUXILIARIES

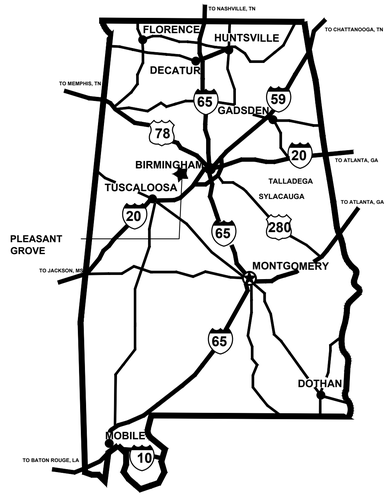

AREA MAP
STATE OF ALABAMA



VICINITY MAP
JEFFERSON COUNTY, ALABAMA

LATHAN ARCHITECTS
LATHAN ▪ BRYANT ▪ CALMA

NEW JROTC FACILITY FOR
PLEASANT GROVE HIGH SCHOOL
100 SPARTAN DRIVE, PLEASANT GROVE, ALABAMA 35127
JEFFERSON COUNTY BOARD OF EDUCATION

STATE OF ALABAMA
No. 3365
RICK N. LATHAN
REGISTERED ARCHITECT

SHEET TITLE:
TITLE AND INDEX

PROJ. MGR.: R. VERNON
DRAWN: –
DATE: FEBRUARY 1, 2022
REVISIONS

JOB NO. 21-66
SHEET NO:
T1.0
1 OF 2

0 1" 2"

CHAPTER 29 - PLUMBING SYSTEMS

OCCUPANCY		WATERCLOSETS				LAVATORIES				DRINKING FOUNTAINS		SERVICE SINKS
USE	LOAD	RATIO	MALE	RATIO	FEMALE	RATIO	MALE	RATIO	FEMALE	RATIO	ALL	ALL
A3	10.24	1/125	0.04	1/65	0.08	1/200	0.03	1/200	0.03	1/500	0.02	
B	3.62	1/25 FIRST 50 1/50 REMAINDER EXCEEDING 50	0.07	1/25 FIRST 50 1/50 REMAINDER EXCEEDING 50	0.07	1/40 FIRST 80 1/80 REMAINDER EXCEEDING 80	0.05	1/40 FIRST 80 1/80 REMAINDER EXCEEDING 80	0.05	1/100	0.04	1
E	129.68	1/50	1.3	1/50	1.3	1/50	1.3	1/50	1.3	1/100	1.3	
S1,S2	2.67	1/100	0.01	1/100	0.01	1/100	0.01	1/100	0.01	1/1000	0.00	
REQUIRED TOTALS			1.42		1.46		0.42		0.42		0.23	1
PROVIDED TOTALS			2.00		2.00		2.00		2.00		2.00	1

2015 INTERNATIONAL BUILDING CODE RESEARCH

OCCUPANCY CLASSIFICATION:	GROUP E		
TYPE OF CONSTRUCTION :	TYPE IIB		
BASE BID PLAN AREA:	5, 828 S.F.		
ALTERNATE PLAN AREA:	1,465 S.F.		
TABLE 504.4 ALLOWABLE NUMBER OF STORIES:	ALLOWABLE STORIES: 2	ACTUAL STORIES: 1	
TABLE 506.2 ALLOWABLE AREA:	AREA FACTOR: NS	14,500 S.F.	
TABLE 601 AND 602 FIRE-RESISTANCE RATING REQUIREMENTS FOR BUILDING ELEMENTS:	CONSTRUCTION TYPE:	IIB	
	STRUCTURAL FRAME:	0	
	BEARING WALLS:	0	
	T. 602 EXTERIOR:	< 5'	1hr
		≥ 5'< 10'	1hr
		≥ 10'< 30'	0
		≥ 30'	0
	INTERIOR:	0	
	NONBEARING WALLS:		
	T. 602 EXTERIOR:	< 5'	1hr
		≥ 5'< 10'	1hr
		≥ 10'< 30'	0
		≥ 30'	0
	INTERIOR:	0	
	FLOOR CONSTRUCTION:	0	
	ROOF CONSTRUCTION:	0	
TABLE 1020.1 CORRIDOR FIRE-RESISTANCE RATING PARTITIONS AND OPENING PROTECTIVES	GROUP E UNSPRINKLERED	0 EXC. (1)	

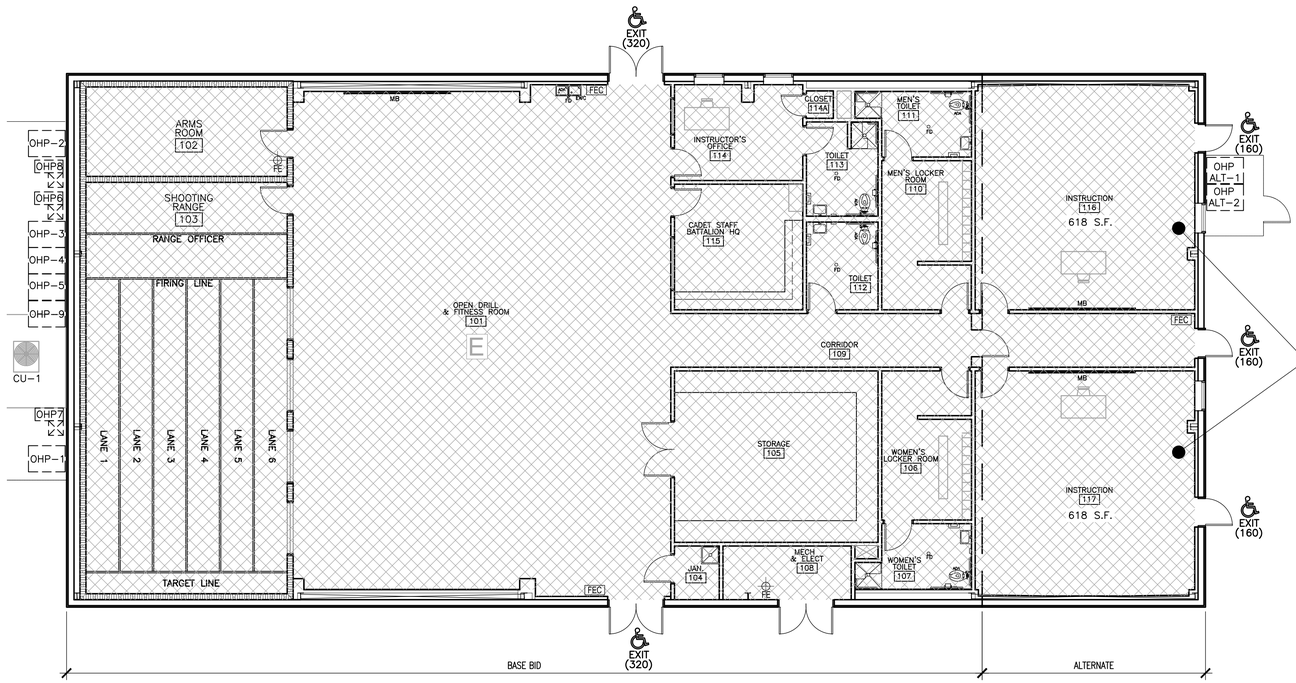

NOTE:
2015 IBC 423.4 – OCCUPANT LOAD OF INSTRUCTION 116 AND 117 IS LESS THAN 50 STUDENTS. TORNADO STORM SHELTER NOT REQUIRED. 618+618= 1,236/30 = 41.2 (DCM MEMO UPDATED GUIDANCE ON TORNADO STORM SHELTER REQUIREMENTS FOR PUBLIC K–12 SCHOOLS SUBJECT TO ACT 2010–746

1 LIFE SAFETY PLAN

1/8" = 1'–0"

WALL TYPE LEGEND

1 HR WALL

DOOR/WINDOW RATING LEGEND

(20) 20 MINUTE DOOR AND FRAME

OCCUPANCY LEGEND

E

GROUP E

LIFE SAFETY NOTES

FEC	FIRE EXTINGUISHER AND CABINET (PROVIDE FIRE RATED CABINETS IN RATED WALLS.)
PE	FIRE EXTINGUISHER
&	ACCESSIBLE
EXIT (320)	EXIT EXIT CAPACITY

- EXTEND AND KEY ALL RATED WALLS TO SHAFT WALL SYSTEM, AND/OR BOTTOM OF ROOF ASSEMBLY
- STENCIL LABEL ALL RATED WALLS & DRAFT STOPS ABOVE CEILING EACH SIDE @ 20'-0" O.C. MAX.
- ALL RATED DOORS AND FRAMES TO BE LABELED WITH EMBOSSED LABELS INDICATING RATING IN MINUTES
- COORDINATE W/ ELECTRICAL & MECHANICAL AND PROVIDE CONCRETE EQUIPMENT PAD AS REQUIRED
- HE - HORIZONTAL EXIT
- FB - FIRE BARRIER
- FP - FIRE PARTITION
- FW - FIRE WALL

LATHAN ARCHITECTS
LATHAN ▪ BRYANT ▪ CALMA

NEW JROTC FACILITY FOR PLEASANT GROVE HIGH SCHOOL

100 SPARTAN DRIVE, PLEASANT GROVE, ALABAMA 35127
JEFFERSON COUNTY BOARD OF EDUCATION

STATE OF ALABAMA
No. 3365
RICK N. LATHAN
REGISTERED ARCHITECT

SHEET TITLE:
LIFE SAFETY PLAN AND LEGENDS - BASE BID

PROJ. MGR.:	R. VERNON
DRAWN:	K.SIMPSON
DATE:	FEBRUARY 1, 2022
REVISIONS	

JOB NO. 21-66

SHEET NO:
LS1.1
2 OF 2

0 1" 2"

GENERAL NOTES:

1. LBYD, INC. SHALL NOT HAVE AUTHORITY OVER THE SITE OR BUILDING CONTRACTOR'S WORK OR RESPONSIBILITIES. LBYD IS NOT RESPONSIBLE FOR SITE SAFETY PROCEDURES OR METHODS OF CONSTRUCTION.
2. ALL EXISTING UTILITIES SHOWN ON THESE DRAWINGS ARE APPROXIMATE AND OTHER UTILITIES MAY EXIST. CONTRACTOR MUST HAVE EXISTING UTILITIES LOCATED BY UNDERGROUND LINE LOCATORS AS WELL AS FIELD VERIFIED BY ONSITE PERSONNEL PRIOR TO ORDERING MATERIALS OR BEGINNING CONSTRUCTION. ANY DISCREPANCIES SHALL BE REPORTED TO LBYD IMMEDIATELY.
3. EXISTING UTILITIES TO REMAIN MAY BE LOCATED WITHIN PROPOSED DEMOLITION AREAS. CONTRACTOR SHALL USE EXTREME CAUTION WHILE WORKING IN THESE AREAS TO ENSURE NO UTILITY SERVICE INTERRUPTIONS TO FACILITIES THAT REMAIN OR TO ADJACENT PROPERTIES.
4. ALL EXISTING IMPROVEMENTS WITHIN THE LIMITS OF CONSTRUCTION ARE TO BE REMOVED UNLESS SPECIFICALLY NOTED,"TO REMAIN".
5. THE CONTRACTOR SHALL TAKE ALL NECESSARY MEASURES TO PROTECT ADJACENT PROPERTIES AND IS RESPONSIBLE FOR ANY DAMAGE TO EXISTING IMPROVEMENTS ON OR OFF SITE DUE TO THE CONSTRUCTION OF THIS PROJECT. ANY DAMAGE WILL BE REPAIRED AT THE CONTRACTOR'S EXPENSE.
6. CONTRACTOR SHALL VERIFY SITE BOUNDARY AND EXISTING TOPOGRAPHY. NOTIFY LBYD OF ANY DISCREPANCIES PRIOR TO SUBMITTING PRICES OR ORDERING MATERIALS
7. IT IS THE CONTRACTOR'S RESPONSIBILITY TO PROTECT ALL BENCHMARKS AND PROPERTY CORNERS. ANY REPLACEMENT WILL BE AT THE CONTRACTOR'S EXPENSE.
8. IT IS THE RESPONSIBILITY OF THE CONTRACTOR TO OBTAIN ALL NECESSARY PERMITS REQUIRED TO CONSTRUCT THIS PROJECT AND PAY ALL PERMIT FEES. ALL PERMITS MUST BE IN-HAND PRIOR TO CONSTRUCTION.
9. TOPOGRAPHIC INFORMATION PROVIDED BY THE OWNER AND PERFORMED BY ARRINGTON ENGINEERING AND LAND SURVEYING COMPANY, INC.
10. TOPOGRAPHIC INFORMATION WAS PERFORMED VIA GROUND RUN FORMAT.

SITE DEMOLITION NOTES:

1. CONTRACTOR TO COORDINATE WITH OWNER PRIOR TO ANY DEMOLITION REGARDING ITEMS TO BE SALVAGED, RECYCLED, AND REUSED. CONTRACTOR SHALL REMOVE ITEMS TO BE SALVAGED WITH EXTREME CAUTION TO PREVENT DAMAGE. CONTRACTOR SHALL TURN ALL SALVAGED ITEMS OVER TO OWNER.
2. CONTRACTOR SHALL COORDINATE WITH OWNER AND THE UTILITY PROVIDER PRIOR TO THE DISCONNECTING OR REMOVAL OF ANY UTILITY SERVICE TO THE EXISTING BUILDINGS. ALL UTILITIES TO BE REMOVED ARE TO BE CAPPED OR PLUGGED OR TERMINATED ACCORDING TO THE UTILITY OWNERS REQUIREMENTS.
3. REFER TO SITE GRADING AND UTILITY PLANS FOR PROPOSED UTILITY AND DRAINAGE INSTALLATION AND REMOVAL.
4. REFER TO LAYOUT PLAN FOR ADDITIONAL INFORMATION RELATING TO PAVING, CURB, SIDEWALKS, HARDSCAPES, ETC. REMOVE EXISTING CURBS AS NEEDED TO INSTALL PROPOSED IMPROVEMENTS.
5. CONTRACTOR SHALL COORDINATE WITH OWNER AND THE UTILITY PROVIDER PRIOR TO THE DISCONNECTING OF ANY UTILITY SERVICE TO THE EXISTING BUILDINGS.
6. CONTRACTOR SHALL BE RESPONSIBLE FOR THE REMOVAL, RELOCATION OR PROTECTION OF ALL ABOVE AND BELOW GROUND EXISTING IMPROVEMENTS THAT ARE IN CONFLICT WITH THE PROPOSED IMPROVEMENTS UNLESS NOTED.
7. ALL DEMOLITION AND CONSTRUCTION DEBRIS SHALL BE TRANSPORTED AND DISPOSED OF AT LEAST WEEKLY IN A LEGAL AND APPROVED MANNER.
8. ALL EXISTING PAVING, CURBS, HARDSCAPE, ETC. SHALL BE SAW CUT AT THE LIMITS OF REMOVAL IN ORDER TO PROVIDE A CLEAN EDGE. EXISTING PAVING AT EDGE SHALL BE MILLED BACK A MINIMUM OF 1.5' TO ENSURE SMOOTH TRANSITION.

SITE LAYOUT NOTES:

1. ALL HANDICAP RAMPS, SIGNS, SYMBOLS, AND PAINTED ISLANDS AND ACCESS ROUTES MUST CONFORM TO THE LATEST ADA REQUIREMENTS.
2. THE MAXIMUM SLOPE IN HANDICAP PARKING AREAS SHALL NOT EXCEED 2.0% GRADE IN ANY DIRECTION. SLOPE IN THE DIRECTION OF TRAVEL IN ALL HANDICAP ACCESS ROUTES SHALL NOT EXCEED 5.0% GRADE AND 2.0% CROSS SLOPE.
3. ALL DIMENSIONS AND COORDINATES SHOWN ARE TO THE OUTSIDE FACE OF BUILDING TO THE BACK OF CURB, OR TO THE EDGE OF SURFACING UNLESS OTHERWISE NOTED. REFER TO ARCHITECTURAL PLANS FOR SPECIFIC BUILDING INFORMATION.
4. ALL STRIPING TO BE PER THE LATEST EDITION OF THE MUTCD UNLESS NOTED OTHERWISE.
5. THE CONTRACTOR SHALL BE RESPONSIBLE FOR PREPARING A SITE CONSTRUCTION TRAFFIC CONTROL PLAN AND OBTAINING ANY REQUIRED APPROVALS FROM THE LOCAL JURISDICTIONAL AUTHORITY. THE SITE CONSTRUCTION TRAFFIC CONTROL PLAN SHALL TAKE INTO ACCOUNT THE ENTERING AND EXITING OF CONSTRUCTION TRAFFIC ONTO THE ROADWAY AND THE IMPACT TO THE FLOW OF TRAFFIC. THIS PLAN SHALL BE IN ACCORDANCE WITH THE LATEST EDITION OF THE MUTCD. THIS SITE CONSTRUCTION TRAFFIC CONTROL PLAN SHALL BE IN ADDITION TO ANY TRAFFIC CONTROL PLAN PROVIDED IN THE PLAN SET FOR ROADWAY IMPROVEMENTS.
6. CONTRACTOR IS RESPONSIBLE FOR ADJUSTING ELEVATIONS OF ALL AT-GRADE STRUCTURES AND UTILITIES TO REMAIN (VALVE BOXES, MANHOLES, INLETS, VAULTS, ETC) TO MATCH PROPOSED FINISHED GRADES.

GRADING NOTES:

1. THE OWNER SHALL BE RESPONSIBLE FOR PROVIDING COMPACTION TESTING.
2. ALL TOPSOIL SHALL BE STRIPPED WITHIN THE PROPOSED LIMITS OF GRADING AND SHALL BE STOCKPILED ON-SITE IN AN APPROVED LOCATION FOR LATER USE WITH ANY EXCESS TO BE DISPOSED OF OFF-SITE ONCE ALL LANDSCAPED AREAS HAVE BEEN BROUGHT TO FINISH GRADE UNLESS OTHERWISE NOTED ON THE PLANS.
3. SUBGRADE SHALL BE PROOF ROLLED WITH A HEAVILY LOADED DUMP TRUCK AND APPROVED BY THE GEOTECHNICAL ENGINEER PRIOR TO PLACING FILL. ANY AREAS SHOWING SIGNS OF PUMPING, RUTTING, OR ANY UNSUITABLE (ORGANIC, SOFT, WET, LOOSE) MATERIAL FOUND IN PLACE SHALL BE UNDERCUT AND REPLACED, OR MOISTURE CONDITIONED AND COMPACTED TO THE SPECIFIED DENSITY AND MOISTURE CONTENT LISTED BELOW.
4. ALL EXPOSED SUBGRADE SHALL BE SCARIFIED TO A MINIMUM DEPTH OF 12", MOISTURE CONDITIONED, AND RECOMPACTED, AS NEEDED TO ACHIEVE THE SPECIFIED DENSITY AND MOISTURE CONTENT LISTED BELOW, UNLESS OTHERWISE DETERMINED BY A GEOTECHNICAL ENGINEER.
5. CONTRACTOR SHALL BE RESPONSIBLE TO PROTECT PREPARED SUBGRADE AND RESTORE TO PROJECT SPECIFICATIONS IF DAMAGED OR COMPROMISED DUE TO INCLEMENT WEATHER AND/OR CONSTRUCTION TRAFFIC.
6. FILL MATERIAL SHALL HAVE THE FOLLOWING PROPERTIES: VIRTUALLY FREE OF ORGANICS, NO ROCK FRAGMENTS GREATER THAN 4" WITHIN 4' OF FINISH GRADE, LIQUID LIMIT NOT EXCEEDING 50, PLASTICITY INDEX NOT EXCEEDING 25, AND A MAXIMUM DRY DENSITY OF NO LESS THAN 105 PCF AS DETERMINED BY ASTM D-698, STANDARD PROCTOR.
7. PLACE FILL MATERIAL IN 8" MAXIMUM LOOSE LIFTS AND COMPACT TO REQUIREMENTS LISTED BELOW.
8. COMPACTION TESTS SHALL BE TAKEN AT THE RECOMMENDATION OF THE ON-SITE GEOTECHNICAL ENGINEER, BUT AT A MINIMUM EVERY 2,500 SQUARE FEET OF AREA PER 8" LIFT.
9. FILL MATERIAL TO BE WITHIN ±2.0% OF OPTIMUM MOISTURE CONTENT AT THE TIME OF COMPACTION, UNLESS OTHERWISE DETERMINED BY A GEOTECHNICAL ENGINEER.
10. MINIMUM COMPACTION REQUIREMENTS ARE EXPRESSED BELOW AS A PERCENTAGE OF THE MATERIAL'S MAXIMUM DRY DENSITY AS DETERMINED BY ASTM D-698, STANDARD PROCTOR.

AREA	STRUCTURAL*	VEHICULAR PAVEMENT	SIDEWALKS	LANDSCAPE
% MAXIMUM DRY DENSITY	**98%**	**98%**	**98%**	**95%**

*STRUCTURAL AREAS INCLUDE ZONES OF INFLUENCE AROUND THE BUILDING, PAVEMENT AREAS, FILL SLOPES, ETC.

11. COMPACTION WITHIN LIMITED SPACES (I.E. MANHOLES, INLETS, UTILITY TRENCHES) SHOULD BE BACKFILLED AND COMPACTED SYSTEMATICALLY, AT THE DIRECTION OF THE ON-SITE GEOTECHNICAL ENGINEER. STONE BACKFILL SHALL BE INSTALLED IN 12" MAXIMUM LOOSE LIFTS AND COMPACTED WITH 6-8 PASSES OF A VIBRATORY COMPACTOR.
12. CLEARING LIMITS SHALL BE 5' OUTSIDE OF ALL PROPOSED GRADED AREAS OR NOT BEYOND THE PROPERTY LINES WHICHEVER IS LESS.
13. NO GRADING OFF-SITE OR IN ANY ROAD RIGHT-OF-WAY WITHOUT PROPER APPROVALS AND PRIOR NOTIFICATION.
14. COORDINATE THE SEQUENCING OF ALL GRADING OPERATIONS WITH THE EROSION CONTROL PLAN.
15. THE MAXIMUM SLOPE IN HANDICAP PARKING AREAS SHALL NOT EXCEED 2.0% GRADE IN ANY DIRECTION. SLOPE IN THE DIRECTION OF TRAVEL IN ALL HANDICAP ACCESS ROUTES SHALL NOT EXCEED 5.0% GRADE AND 2.0% CROSS SLOPE.
16. ALL GRADING ADJACENT TO EXISTING OR PROPOSED BUILDINGS SHALL BE SLOPED AWAY FROM THE STRUCTURES AT A MINIMUM OF 1.0% GRADE. THE CONTRACTOR SHALL ENSURE POSITIVE DRAINAGE AWAY FROM THE STRUCTURES. NOTIFY LBYD OF ANY DISCREPANCIES.
17. PROPOSED GRADES INDICATED ON THIS PLAN ARE TO FINISH GRADE. THE CONTRACTOR SHALL MAKE SUBGRADE ADJUSTMENTS FOR TOPSOIL, PAVING, BUILDING PAD, ETC.
18. A GEOTECHNICAL REPORT HAS BEEN PREPARED BY BHATE GEOSCIENCES, PROJECT NUMBER 122117 AND IS AVAILABLE FOR INFORMATION PURPOSES. THE CONTRACTOR SHALL REVIEW THIS REPORT, VISIT THE SITE AND COMPLETE ANY ADDITIONAL EXPLORATIONS THAT IT FEELS NECESSARY IN ORDER TO PROVIDE A SATISFACTORY BID.
19. DEWATERING SHALL BE SOLELY THE RESPONSIBILITY OF THE CONTRACTOR. PREVENT SURFACE WATER AND GROUND WATER FROM ENTERING EXCAVATIONS, FROM PONDING ON PREPARED SUBGRADES, AND FROM FLOODING PROJECT SITE AND SURROUNDING AREA. PROTECT SUBGRADES FROM SOFTENING, UNDERMINING, WASHOUT, AND DAMAGE BY RAIN OR WATER ACCUMULATION. REROUTE SURFACE WATER RUNOFF AWAY FROM EXCAVATED AREAS. DO NOT ALLOW WATER TO ACCUMULATE IN EXCAVATIONS. DO NOT USE EXCAVATED TRENCHES AS TEMPORARY DRAINAGE DITCHES. INSTALL A DEWATERING SYSTEM TO KEEP SUBGRADES DRY AND CONVEY GROUND WATER AWAY FROM EXCAVATIONS. MAINTAIN UNTIL DEWATERING IS NO LONGER REQUIRED. IF GROUNDWATER DEWATERING IS REQUIRED, CONTRACTOR IS TO OBTAIN ANY PERMITS AS MAY BE REQUIRED PRIOR TO DISCHARGE OF EFFLUENT FROM DEWATERING.
20. GRADING ADJACENT TO THE BUILDING SHALL BE COORDINATED WITH ARCHITECTURAL AND STRUCTURAL DRAWINGS FOR FOUNDATION WALLS, STEM WALLS, DRAINS, AND OTHER CONDITIONS. THE CONTRACTOR SHALL NOTIFY LBYD INC. OF ANY DISCREPANCIES.

STORM DRAINAGE NOTES:

1. THE CONTRACTOR SHALL SUBMIT SHOP DRAWINGS ON ALL STORM PIPE MATERIALS TO LBYD PRIOR TO INSTALLATION AND/OR FABRICATION.
2. ALL PROPOSED STORM INLETS (GRATES, CURB, YARD, AREA DRAINS) ARE TO BE LOCATED AT THE LOWPOINTS. GRADING SHALL BE TO DIRECT RUNOFF TO THESE INLETS. NOTIFY LBYD OF ANY DISCREPANCIES.
3. STORM DRAINAGE SYSTEMS SHALL BE CONSTRUCTED FROM DOWNSTREAM TO UPSTREAM. VERIFY ALL PIPE SLOPES, INVERTS, AND POINTS OF CONNECTION PRIOR TO CONSTRUCTION. NOTIFY LBYD OF ANY DISCREPANCIES.
4. THE CONTRACTOR SHALL VERIFY ALL EXISTING AND PROPOSED STORM PIPE GRADES AND POINTS OF CONNECTION PRIOR TO INSTALLATION. LBYD SHALL BE NOTIFIED OF ANY DEVIATIONS PRIOR TO CONSTRUCTION.
5. PROPOSED STORM PIPES 30" AND LESS SHALL BE BEDDED IN 4" OF CRUSHED AGGREGATE AND STORM PIPES 36" AND GREATER SHALL BE BEDDED IN A 6" OF CRUSHED AGGREGATE.
6. ALL STORM PIPES 15" AND LESS SHALL BE SMOOTH LINED HIGH DENSITY POLYETHYLENE (HDPE) OR SCHEDULE 40 POLYVINYL CHLORIDE (PVC) WITH WATER-TIGHT JOINTS UNLESS OTHERWISE NOTED, INSTALLED PER MANUFACTURERS RECOMMENDATIONS. ALL STORM PIPES 18" AND GREATER SHALL BE CLASS 3 REINFORCED CONCRETE PIPE (RCP) BELL AND SPIGOT INSTALLED WITH WATERTIGHT JOINTS UNLESS OTHERWISE NOTED.
7. ALL STORM MANHOLES SHALL BE PRECAST CONE, RISER, AND BASE SECTIONS WITH GASKETED JOINTS MEETING ALDOT SPECIAL DRAWING # MH-621-2.
8. ALL YARD INLETS SHALL BE PRECAST INLET BOXES 3-1" x 3-1" OR 4'2 x 4'-2" DEPENDING ON MAXIMUM PIPE DEFLECTIONS. YARD INLET TOP TO BE PRECAST WITH A RING AND COVER ACCESS PROVIDED THROUGH THE TOP.
9. ALL CONCRETE COLLARS SHALL BE PER ALDOT SPECIAL DRAWING # CC-530.
10. CONTRACTOR SHALL PROVIDE CAST IRON DOWNSPOUT BOOTS, CLEANOUTS AND COLLECTOR LINES FROM ALL EXTERIOR DOWNSPOUTS TO CONNECT TO PRIMARY STORM DRAINAGE SYSTEM. COORDINATE WITH EXTERIOR ELEVATIONS, ROOF AND PLUMBING PLANS FOR DOWNSPOUT LOCATIONS. COORDINATE DOWNSPOUT MODEL NUMBER WITH THE ARCHITECT.
11. CONTRACTOR SHALL COORDINATE ROOF DRAIN COLLECTOR LINES, DOWNSPOUTS AND BOOTS WITH FOOTING ELEVATIONS ON THE STRUCTURAL PLANS PRIOR TO POURING FOOTINGS. TOP OF FOOTINGS SHALL BE A MINIMUM OF 3' BELOW GRADE AT ALL ROOF DRAIN DOWNSPOUT LOCATIONS TO ENSURE ADEQUATE COVER TO TRANSITION TO BELOW GRADE PIPING.
12. PROVIDE 4" PVC SCHEDULE 40 GRAVITY DRAIN LINE FROM ALL BELOW GRADE UTILITY VAULTS TO THE NEAREST STORM DRAINAGE INLET OR DAYLIGHT AT GRADE.

EROSION CONTROL NOTES:

1. SITE EROSION CONTROL MEASURES SHALL BE IN ACCORDANCE WITH ALL FEDERAL, STATE, AND LOCAL LAWS, CODES, AND REGULATIONS.
2. THE CONTRACTOR SHALL BE RESPONSIBLE FOR OBTAINING ANY REQUIRED EROSION CONTROL PERMITS. THE CONTRACTOR SHALL BE RESPONSIBLE FOR ALL MONITORING, INSPECTIONS, ETC. TO ENSURE THE OWNER THAT THE SITE IS AT ALL TIMES IN ACCORDANCE WITH PERMIT RULES & REGULATIONS. DOCUMENTATION OF INSPECTIONS BY A Q.C.I. OR Q.C.P. SHALL BE MAINTAINED BY THE CONTRACTOR AND PROVIDED TO THE OWNER AT HIS/HER REQUEST. ANY AND ALL FEES, FINES, ETC., SHALL BE THE RESPONSIBILITY OF THE CONTRACTOR.
3. ALL EROSION CONTROL DEVICES SHALL BE PROPERLY MAINTAINED DURING THE CONSTRUCTION PROCESS AND UNTIL ALL DISTURBED AREAS HAVE BEEN PERMANENTLY STABILIZED. ALL EROSION CONTROL INSTALLATION AND MAINTENANCE SHALL BE SOLELY THE RESPONSIBILITY OF THE CONTRACTOR AND SHALL BE AT NO ADDITIONAL COST TO THE OWNER.
4. EROSION CONTROL DEVICES SHOWN ON THESE PLANS ARE A MINIMUM AND ARE DEPENDENT ON THE CONTRACTOR'S CONSTRUCTION PHASING OF THE PROJECT. ADDITIONAL DEVICES SHALL BE INSTALLED AS REQUIRED TO PREVENT SILTATION, EROSION AND OTHER DEGRADATION OR POLLUTION TO THE SITE OR ADJACENT PROPERTIES, STREAMS, DITCHES, AND PUBLIC ROADWAYS. ADDITIONAL MEASURES MAY INCLUDE, AS MINIMUM, TEMPORARY SEDIMENT BASINS, CONSTRUCTION EXITS PAD, VEHICLE WASH RACKS, SILT FENCING, STRAW AND RIP RAP CHECK DAMS, DIVERSION DITCHES, ETC. THESE ADDITIONAL MEASURES SHALL BE AT NO ADDITIONAL COST TO THE OWNER.
5. EROSION CONTROL DEVICES SHALL INCLUDE, BUT NOT LIMITED, TO THE FOLLOWING DEVICES: SILT FENCING, BRUSH BERMS, SEDIMENT BASINS, DETENTION PONDS, STRAW WATTLES , CHECK DAMS, FILTER BERMS, JUTE MATTING, VEGETATIVE FILTER STRIPS, TURF REINFORCEMENT MAT, DIVERSION BERMS, ETC.
6. THE CONTRACTOR SHALL BE RESPONSIBLE FOR MAINTAINING ALL EROSION CONTROL DEVICES IN GOOD OPERATING CONDITION DURING ALL LAND DISTURBING ACTIVITIES. THIS RESPONSIBILITY SHALL INCLUDE THE CLEANUP AND/OR REPAIRS TO THE DEVICES AT NO ADDITIONAL COST TO THE OWNER.
7. EROSION CONTROL DEVICES SHALL BE MONITORED AND MAINTAINED UNTIL THE SITE HAS BEEN PERMANENTLY STABILIZED AND AFTER EACH RAINFALL GREATER THAN 0.75 INCHES IN A 24 HOUR PERIOD, ANY WIND GUSTS GREATER THAN 25 MPH, AND ANY SUSTAINED WINDS GREATER THAN 20 MPH IN A 24 HOUR PERIOD.
8. AFTER ALL LAND DISTURBANCE ACTIVITIES HAVE CEASED AND AFTER ALL DISTURBED AREAS HAVE BEEN PERMANENTLY STABILIZED, THE EROSION CONTROL DEVICES SHALL BE REMOVED BY THE CONTRACTOR AND THE AREA CLEANED AND DRESSED.
9. DEWATERING OPERATIONS MAY NOT BE DISCHARGED IN A MANNER THAT CAUSES EROSION OF THE SITE OR POLLUTION TO ADJACENT PROPERTIES, STREAMS, DITCHES, OR PUBLIC ROADWAYS.
10. A GRAVELED ACCESS DRIVE OF SUFFICIENT SIZE SHALL BE AT EACH SITE ENTRANCE/EXIT TO PREVENT TRACKING OF DIRT AND SEDIMENT ONTO PUBLIC OR PRIVATE ROADWAYS. IF SEDIMENT REACHES THE ROADWAY, THEN IT MUST BE CLEANED AT THE END OF EACH WORKDAY.
11. ALL LAND DISTURBANCE ACTIVITIES SHALL BE CONDUCTED IN A LOGICAL SEQUENCE TO MINIMIZE THE EXPOSURE OF BARE AREAS AT ANY ONE TIME.
12. ALL DISTURBED AREAS LEFT INACTIVE FOR MORE THAN 13 DAYS SHALL BE SEEDED AND MULCHED IN ACCORDANCE WITH ALDOT SPECIFICATIONS SECTION 652 AND 656.
13. ALL PREVIOUSLY GRADED AREAS SHALL RECEIVE 4 INCHES OF TOPSOIL AND PERMANENT GRASSING UNLESS OTHERWISE INDICATED ON THE LANDSCAPE PLAN.
14. PRIOR TO SITE CLEARING, ALL PERIMETER SILT FENCING, BRUSH BERMS, ETC. AND GRAVELED ACCESS DRIVES SHALL BE INSTALLED.
15. ALL EXISTING STREAMS, DITCHES, ETC. SHALL BE PROTECTED FROM SEDIMENTS AND SILTS BY SILT FENCING, WATTLES, BRUSH BERMS, ETC.
16. WATTLES OR SILT FENCING SHALL BE INSTALLED AT ALL INLETS UPON THE COMPLETION OF EACH INLET.

UTILITY NOTES:

1. THE SITE CONTRACTOR IS RESPONSIBLE FOR COMPLETING ALL UTILITY SERVICES (WATER, SEWER, GAS, ELECTRICAL, TELEPHONE, CABLE TV) FROM THE POINT THE RESPECTIVE UTILITY COMPANY COMPLETES THEIR WORK TO THE POINT OF CONNECTION AT THE BUILDING.
2. REFER TO ARCHITECTURAL, MECHANICAL, PLUMBING, ELECTRICAL, ETC. PLANS FOR ALL PROPOSED UTILITY POINTS OF CONNECTION AT THE BUILDING. NOTIFY ARCHITECT OF ANY DISCREPANCIES.
3. GRAVITY SEWER SYSTEMS SHALL BE CONSTRUCTED FROM DOWNSTREAM TO UPSTREAM. VERIFY ALL PIPE SLOPES, INVERTS, AND POINTS OF CONNECTION PRIOR TO CONSTRUCTION. NOTIFY LBYD OF ANY DISCREPANCIES.
4. THE CONTRACTOR SHALL VERIFY ALL EXISTING AND PROPOSED GRAVITY SEWER PIPE GRADES AND POINTS OF CONNECTION PRIOR TO INSTALLATION. LBYD SHALL BE NOTIFIED OF ANY DEVIATIONS PRIOR TO CONSTRUCTION.
5. BACKFLOW PREVENTION AND METERING SHALL BE PROVIDED ON THE DOMESTIC SERVICE IN ACCORDANCE WITH THE LOCAL UTILITY COMPANY'S REQUIREMENTS.
6. WATER MAINS 4 INCHES IN DIAMETER AND GREATER SHALL BE DIP(CL 350) AND WATER MAINS LESS THAN 3 INCHES IN DIAMETER SHALL BE PVC (SCHD.40) UNLESS OTHERWISE INDICATED ON THE PLANS.
7. WATER MAINS AND SERVICES SHALL BE A MINIMUM OF 10 FEET HORIZONTAL AND 2 FEET VERTICAL FROM ALL SANITARY SEWER MAINS AND LATERALS.
8. WATER MAINS AND SERVICES SHALL BE INSTALLED IN ACCORDANCE WITH THE LOCAL UTILITY COMPANY'S REQUIREMENTS. ALL MAINS AND SERVICES SHALL BE INSTALLED WITH A MINIMUM OF 36" COVER UNLESS OTHERWISE INDICATED ON PLANS.
9. ALL SANITARY SEWER MAINS AND LATERALS SHALL BE PVC C900(CL.150 DR-18) UNLESS OTHERWISE REQUIRED BY THE LOCAL UTILITY COMPANY.
10. ALL UNDERGROUND ELECTRICAL, TELEPHONE, AND CABLE TV SHALL BE INSTALLED IN PVC CONDUIT OR CONCRETE ENCASED DUCT BANK WITH PULL WIRE MEETING THE LOCAL UTILITY COMPANY'S REQUIREMENTS. INFORMATION SHOWN ON CIVIL DRAWINGS FOR REFERENCE ONLY. REFER TO ELECTRICAL PLANS FOR SPECIFIC INFORMATION.
11. GAS SERVICE SHALL BE PER THE LOCAL UTILITY COMPANY'S REQUIREMENTS. INFORMATION SHOWN ON CIVIL DRAWINGS FOR REFERENCE ONLY. COORDINATE WITH MECHANICAL ENGINEER AND UTILITY COMPANY.
12. UTILITY TRENCHES SHALL BE BACKFILLED WITH COMPACTED FILL PLACED IN 6 INCH LOOSE LIFTS. FILL SHALL BE COMPACTED TO 98% STANDARD PROCTOR AND OPTIMUM MOISTURE CONTENT WITHIN ±2.0%.
13. WHEN INSTALLING UTILITIES IN EXISTING PAVED AREAS OR IN AREAS WHERE SOILS ARE CONSIDERED UNSUITABLE FOR BEDDING OR BACKFILLING, UTILITY TRENCHES SHALL BE BACKFILLED FULL DEPTH WITH CRUSHED AGGREGATE.
14. WHERE UTILITIES ARE TO BE INSTALLED IN AREAS OF EXISTING PAVING, HARDSCAPE, SIDEWALKS, ETC. CONTRACTOR SHALL SAWCUT AND REMOVE EXISTING PAVING, HARDSCAPE, SIDEWALK ETC. AND REPLACE IN LIKE KIND AND RESTRIPE AS NECESSARY. BACKFILL TRENCH FULL DEPTH WITH STONE.
15. CONTRACTOR IS RESPONSIBLE FOR ADJUSTING ELEVATIONS OF ALL AT-GRADE STRUCTURES AND UTILITIES TO REMAIN (VALVE BOXES, MANHOLES, INLETS, VAULTS, ETC) TO MATCH PROPOSED FINISHED GRADES.
16. PROVIDE 4" PVC SCHEDULE 40 GRAVITY DRAIN LINE FROM ALL BELOW GRADE UTILITY VAULTS TO THE NEAREST STORM DRAINAGE INLET OR DAYLIGHT AT GRADE.

LBYD, Inc.
Civil and Structural Engineers
880 Montclair Road
Suite 600
Birmingham, AL 35213
Main (205) 251-4500

© copyright 2022
These drawings and design intent are the sole property of LBYD, Inc. which may not be reproduced without written permission

PROJECT NO. 131864

LATHAN ARCHITECTS
LATHAN ▪ BRYANT ▪ CALMA

NEW JROTC FACILITY FOR
PLEASANT GROVE HIGH SCHOOL
100 SPARTAN DRIVE, PLEASANT GROVE, AL 35127
JEFFERSON COUNTY BOARD OF EDUCATION

ALABAMA LICENSED PROFESSIONAL ENGINEER No. 24443 CHRISTOPHER ALLEN LBYD
2/1/2022

SHEET TITLE:
CIVIL NOTES

PROJ. MGR.: CAH
DRAWN: LBH
DATE: FEBRUARY 1, 2022
REVISIONS

JOB NO. 21-66
SHEET NO:
C0.1
1 OF 9
0 1" 2"

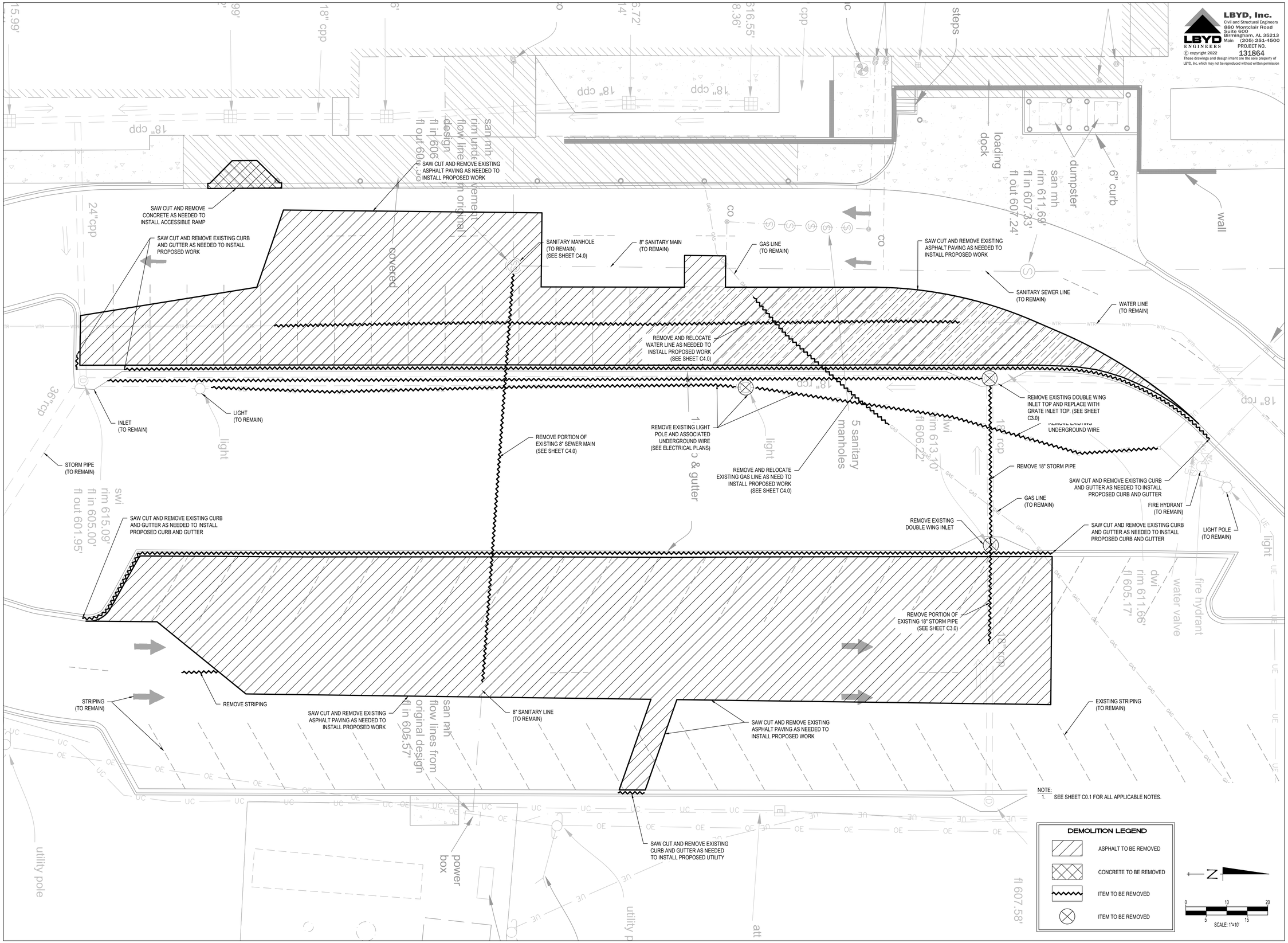

LBYD, Inc.
Civil and Structural Engineers
880 Montclair Road
Suite 600
Birmingham, AL 35213
Main (205) 251-4500

PROJECT NO. 131864

© copyright 2022
These drawings and design intent are the sole property of LBYD, Inc. which may not be reproduced without written permission

LATHAN ARCHITECTS
LATHAN ▪ BRYANT ▪ CALMA

NEW JROTC FACILITY FOR PLEASANT GROVE HIGH SCHOOL

100 SPARTAN DRIVE, PLEASANT GROVE, AL 35127
JEFFERSON COUNTY BOARD OF EDUCATION

ALABAMA LICENSED No. 24443 PROFESSIONAL ENGINEER CHRISTOPHER ALLEN
2/1/2022

SHEET TITLE:
DEMOLITION PLAN
BASE BID

PROJ. MGR.: CAH
DRAWN: LBH
DATE: FEBRUARY 1, 2022
REVISIONS

JOB NO. 21-66
SHEET NO:
C1.0
2 OF 9

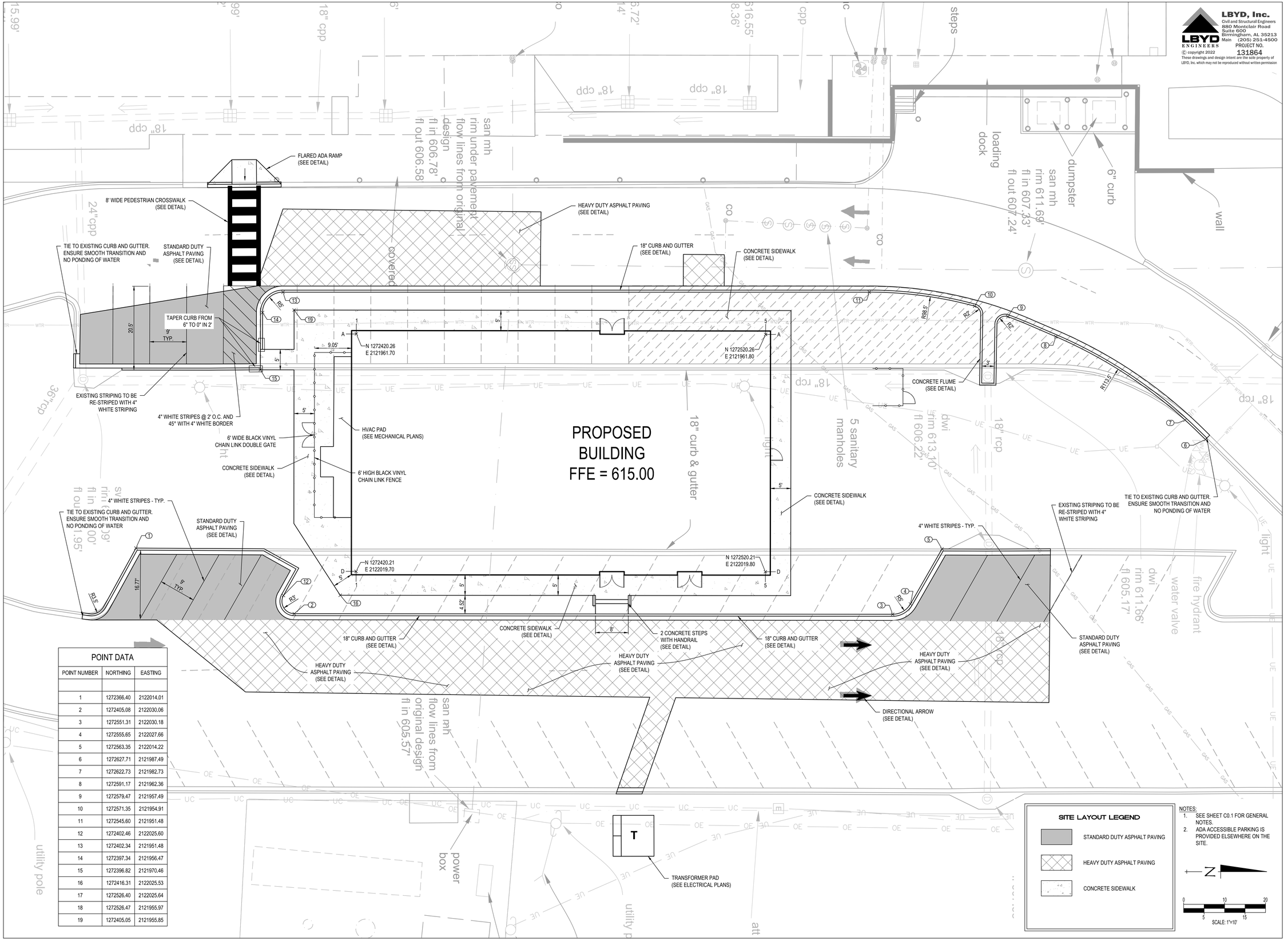

POINT DATA		
POINT NUMBER	NORTHING	EASTING
1	1272366.40	2122014.01
2	1272405.08	2122030.06
3	1272551.31	2122030.18
4	1272555.65	2122027.66
5	1272563.35	2122014.22
6	1272627.71	2121987.49
7	1272622.73	2121982.73
8	1272591.17	2121962.36
9	1272579.47	2121957.49
10	1272571.35	2121954.91
11	1272545.60	2121951.48
12	1272402.46	2122025.60
13	1272402.34	2121951.48
14	1272397.34	2121956.47
15	1272396.82	2121970.46
16	1272416.31	2122025.53
17	1272526.40	2122025.64
18	1272526.47	2121955.97
19	1272405.05	2121955.85

SITE LAYOUT LEGEND

- STANDARD DUTY ASPHALT PAVING
- HEAVY DUTY ASPHALT PAVING
- CONCRETE SIDEWALK

NOTES:
1. SEE SHEET C0.1 FOR GENERAL NOTES.
2. ADA ACCESSIBLE PARKING IS PROVIDED ELSEWHERE ON THE SITE.

SCALE: 1"=10'

LBYD, Inc.
Civil and Structural Engineers
880 Montclair Road
Suite 600
Birmingham, AL 35213
Main (205) 251-4500

PROJECT NO. 131864

© copyright 2022
These drawings and design intent are the sole property of LBYD, Inc. which may not be reproduced without written permission

LATHAN ARCHITECTS
LATHAN ▪ BRYANT ▪ CALMA

NEW JROTC FACILITY FOR PLEASANT GROVE HIGH SCHOOL

100 SPARTAN DRIVE, PLEASANT GROVE, AL 35127
JEFFERSON COUNTY BOARD OF EDUCATION

ALABAMA LICENSED No. 24443 PROFESSIONAL ENGINEER CHRISTOPHER ALLEN 2/1/2022

SHEET TITLE:
LAYOUT PLAN
BASE BID

PROJ. MGR.: CAH
DRAWN: LBH
DATE: FEBRUARY 1, 2022
REVISIONS

JOB NO. 21-66
SHEET NO:
C2.0
3 OF 9

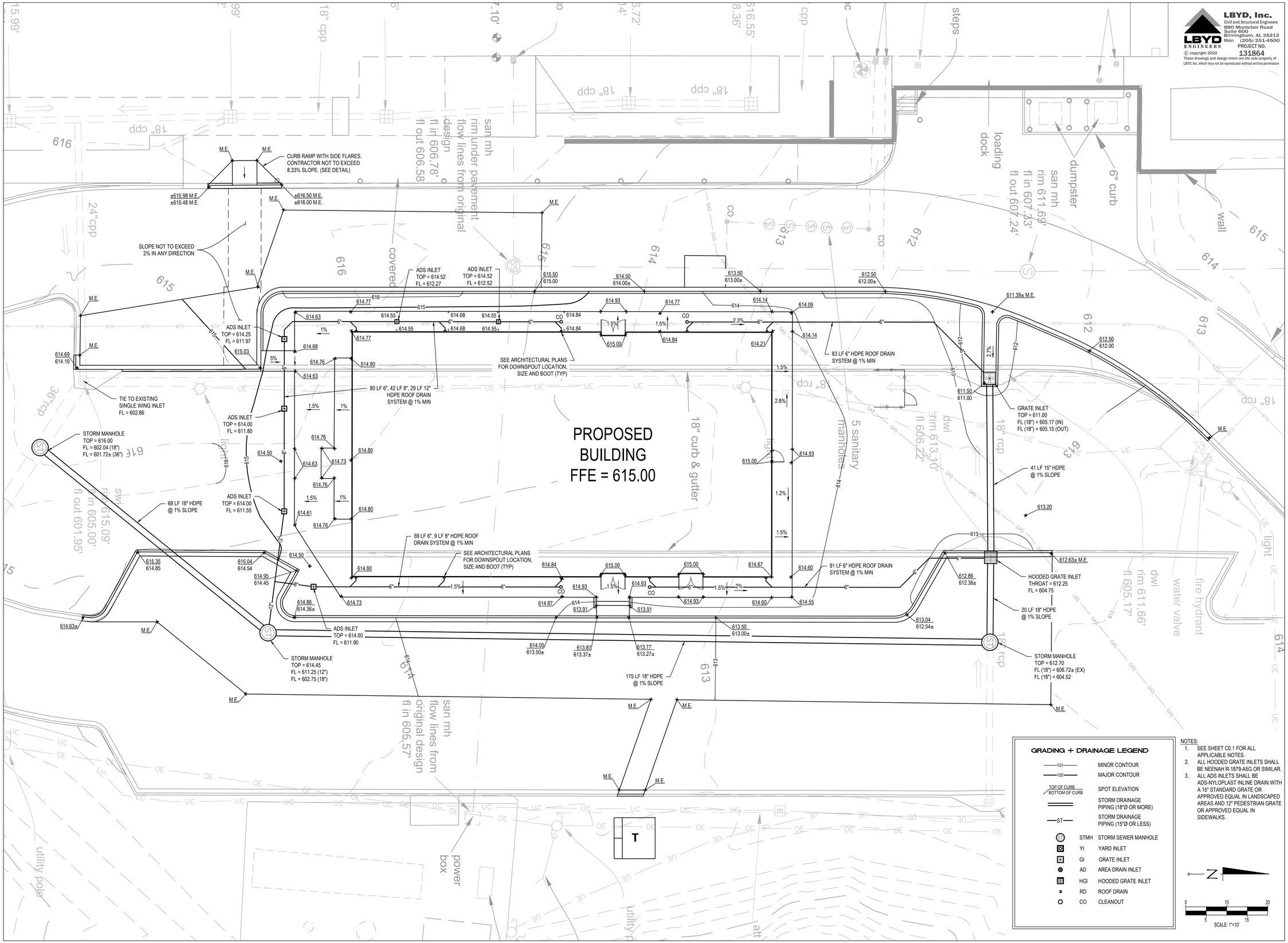

NOTES:
1. SEE SHEET C0.1 FOR ALL APPLICABLE NOTES.
2. ALL HOODED GRATE INLETS SHALL BE NEENAH R-1879-A5G OR SIMILAR.
3. ALL ADS INLETS SHALL BE ADS-NYLOPLAST INLINE DRAIN WITH A 15" STANDARD GRATE OR APPROVED EQUAL IN LANDSCAPED AREAS AND 12" PEDESTRIAN GRATE OR APPROVED EQUAL IN SIDEWALKS.

LBYD, Inc.
Civil and Structural Engineers
880 Montclair Road
Suite 600
Birmingham, AL 35213
Main (205) 251-4500
LBYD ENGINEERS
PROJECT NO. 131864
© copyright 2022
These drawings and design intent are the sole property of LBYD, Inc. which may not be reproduced without written permission

LATHAN ARCHITECTS
LATHAN ▪ BRYANT ▪ CALMA

NEW JROTC FACILITY FOR PLEASANT GROVE HIGH SCHOOL

100 SPARTAN DRIVE, PLEASANT GROVE, AL 35127
JEFFERSON COUNTY BOARD OF EDUCATION

ALABAMA LICENSED No. 24443 PROFESSIONAL ENGINEER CHRISTOPHER ALLEN LAMB 2/1/2022

SHEET TITLE:
GRADING AND DRAINAGE PLAN BASE BID

PROJ. MGR.: CAH
DRAWN: LBH
DATE: FEBRUARY 1, 2022
REVISIONS

JOB NO. 21-66
SHEET NO:
C3.0
4 OF 9

LBYD, Inc.
Civil and Structural Engineers
880 Montclair Road
Suite 600
Birmingham, AL 35213
Main (205) 251-4500
PROJECT NO.
131864
© copyright 2022
These drawings and design intent are the sole property of LBYD, Inc. which may not be reproduced without written permission

LATHAN ARCHITECTS
LATHAN ▪ BRYANT ▪ CALMA

NEW JROTC FACILITY FOR PLEASANT GROVE HIGH SCHOOL

100 SPARTAN DRIVE, PLEASANT GROVE, AL 35127
JEFFERSON COUNTY BOARD OF EDUCATION

SANITARY SEWER MANHOLE TOP = 615.90 FL = 606.34
49 LF 8" DIP (CL52) @ 0.4% SLOPE MIN
TIE TO EXISTING MANHOLE WITH NEOPRENE BOOT
SANITARY SEWER MANHOLE TOP TO BE RAISED TO MATCH EXISTING ASPHALT GRADE TOP = 615.10±
SAW CUT AND REMOVE ASPHALT PAVING AS NEEDED TO INSTALL SANITARY LATERAL. STONE BACK FILL (SEE DETAIL)
TIE TO EXISTING SANITARY SEWER MAIN FL = 606.95±
RELOCATE GAS LINE AS NEEDED PER UTILITY PROVIDERS STANDARDS AND SPECIFICATIONS
8" DIP (CL350) WATER LINE
14 LF 4" PVC (SCH40) @ 32.5% SLOPE
TIE TO EXISTING WATER LINE
CLEANOUT FL = 611.50
SEE PLUMBING PLANS FOR CONTINUATION
2" PVC (SCH.40) DOMESTIC WATER
2" RPZ BACK FLOW PREVENTER IN AN ABOVE GROUND FREEZE PROOF ENCLOSURE
RELOCATE GAS LINE AS NEEDED PER UTILITY PROVIDERS STANDARDS AND SPECIFICATIONS
EXISTING FIRE HYDRANT
80 LF 8" DIP (CL52) @ 0.4% SLOPE MIN
PROPOSED BUILDING FFE = 615.00
SANITARY SEWER MANHOLE TOP = 614.88 FL = 606.02
48 LF 8" DIP (CL52) @ 0.4% SLOPE MIN
SANITARY SEWER MANHOLE TOP = 613.77 FL = 605.83
UNDERGROUND POWER (SEE ELECTRICAL PLANS)
UNDERGROUND POWER (SEE ELECTRICAL PLANS)
TRANSFORMER PAD (SEE ELECTRICAL PLANS)

UTILITY LEGEND

F		FIRE SERVICE
W		DOMESTIC WATER
IRR		IRRIGATION SERVICE
COMM		COMMUNICATION
UGP		UNDERGROUND POWER
OHP		OVERHEAD POWER
GAS		GAS
SS		SANITARY SEWER
		FIRE HYDRANT
	TB	THRUST BLOCK
		SANITARY SEWER MANHOLE
	CO	CLEANOUT

NOTES:
1. SEE SHEET C0.1 FOR GENERAL NOTES.
2. 8" GRAVITY MAIN IS A PRIVATE SYSTEM MAINTAINED BY THE OWNER.
3. SANITARY SEWER HAS BEEN DESIGNED AT MINIMUM SLOPE. CONTRACTOR TO USE CAUTION DURING INSTALLATION TO ENSURE MINIMUM SLOPE IS MAINTAINED.

N

0 10 20
5 15
SCALE: 1"=10'

ALABAMA LICENSED PROFESSIONAL ENGINEER No. 24443 CHRISTOPHER ALLEN HOLT 2/1/2022

SHEET TITLE:
UTILITY PLAN
BASE BID

PROJ. MGR.:	CAH
DRAWN:	LBH
DATE:	FEBRUARY 1, 2022
REVISIONS	

JOB NO. 21-66

SHEET NO:
C4.0
5 OF 9

0 1" 2"

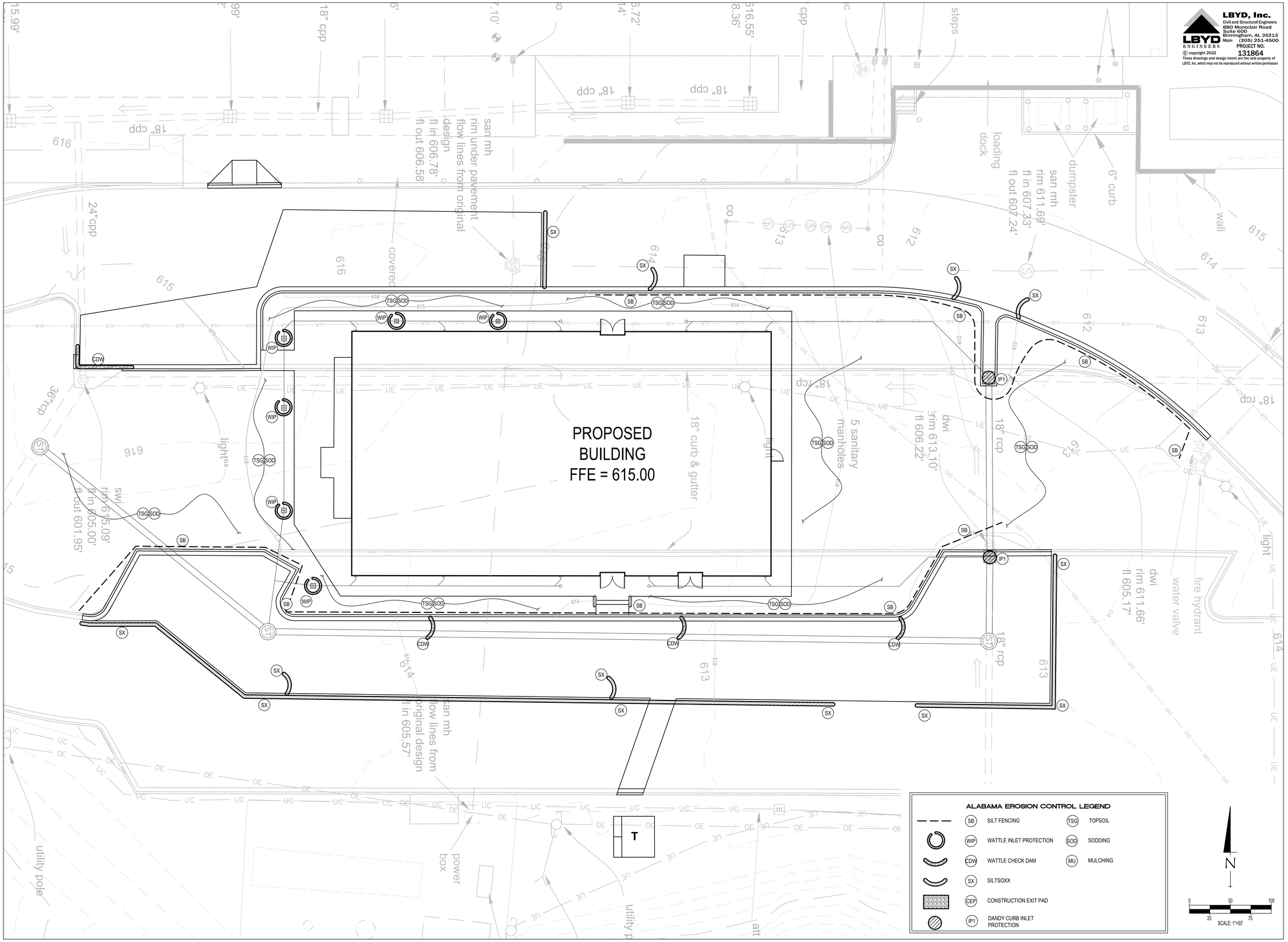

LBYD, Inc.
Civil and Structural Engineers
880 Montclair Road
Suite 600
Birmingham, AL 35213
Main (205) 251-4500
LBYD ENGINEERS
© copyright 2022
These drawings and design intent are the sole property of LBYD, Inc. which may not be reproduced without written permission
PROJECT NO.
131864

LATHAN ARCHITECTS
LATHAN ▪ BRYANT ▪ CALMA

NEW JROTC FACILITY FOR PLEASANT GROVE HIGH SCHOOL

100 SPARTAN DRIVE, PLEASANT GROVE, AL 35127
JEFFERSON COUNTY BOARD OF EDUCATION

ALABAMA LICENSED No. 24443 PROFESSIONAL ENGINEER CHRISTOPHER ALLEN HOLLIS 2/1/2022

SHEET TITLE:
EROSION CONTROL PLAN
BASE BID

PROJ. MGR.:	CAH
DRAWN:	LBH
DATE:	FEBRUARY 1, 2022
REVISIONS	

JOB NO. 21-66

SHEET NO:
C5.0
6 OF 9

0 1" 2"

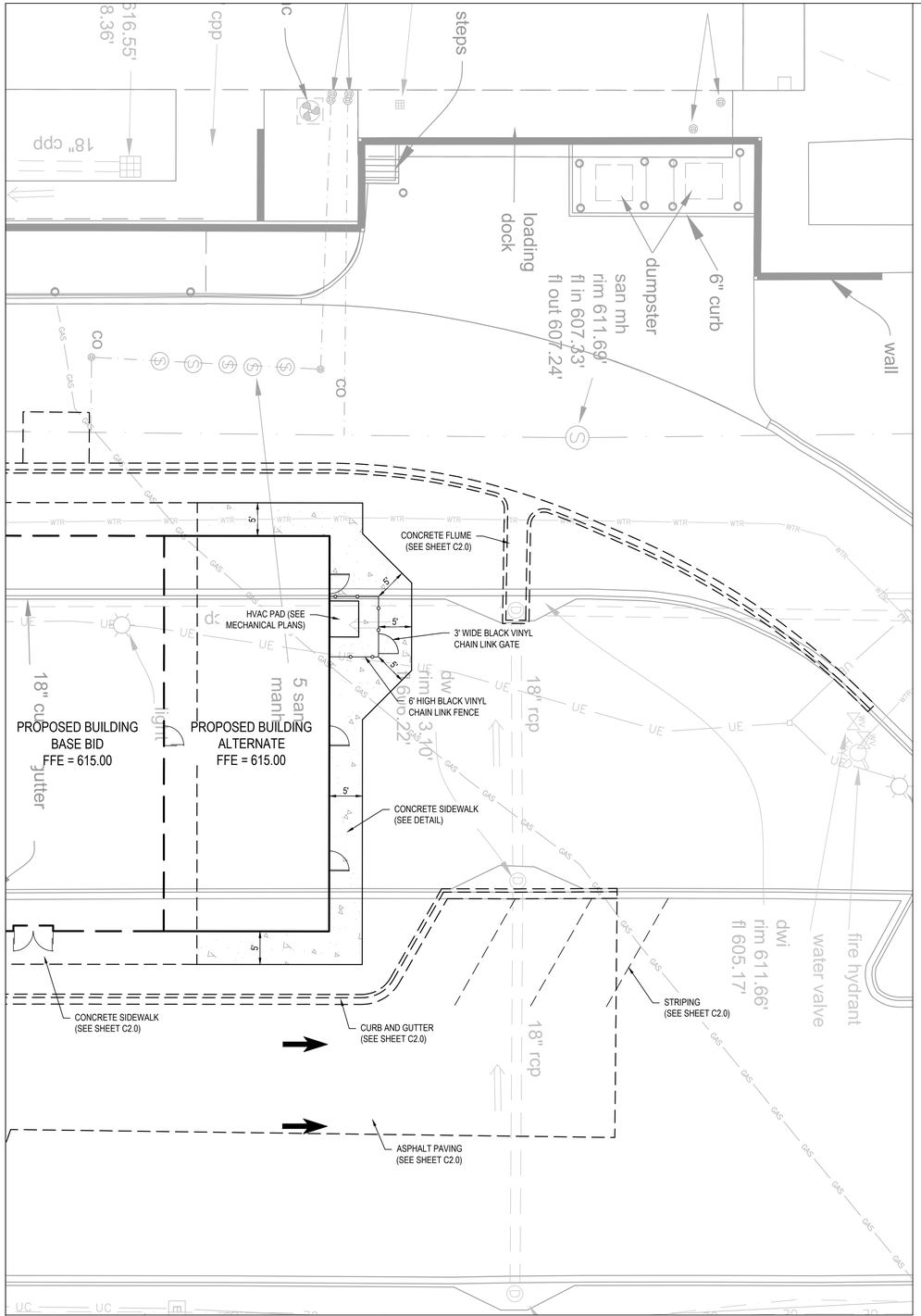

NOTES:
1. SEE SHEET C0.1 FOR ALL APPLICABLE NOTES.
2. SEE SHEET C2.0 FOR BASE BID LAYOUT PLAN.

SITE LAYOUT LEGEND

CONCRETE SIDEWALK

SCALE: 1"=10'

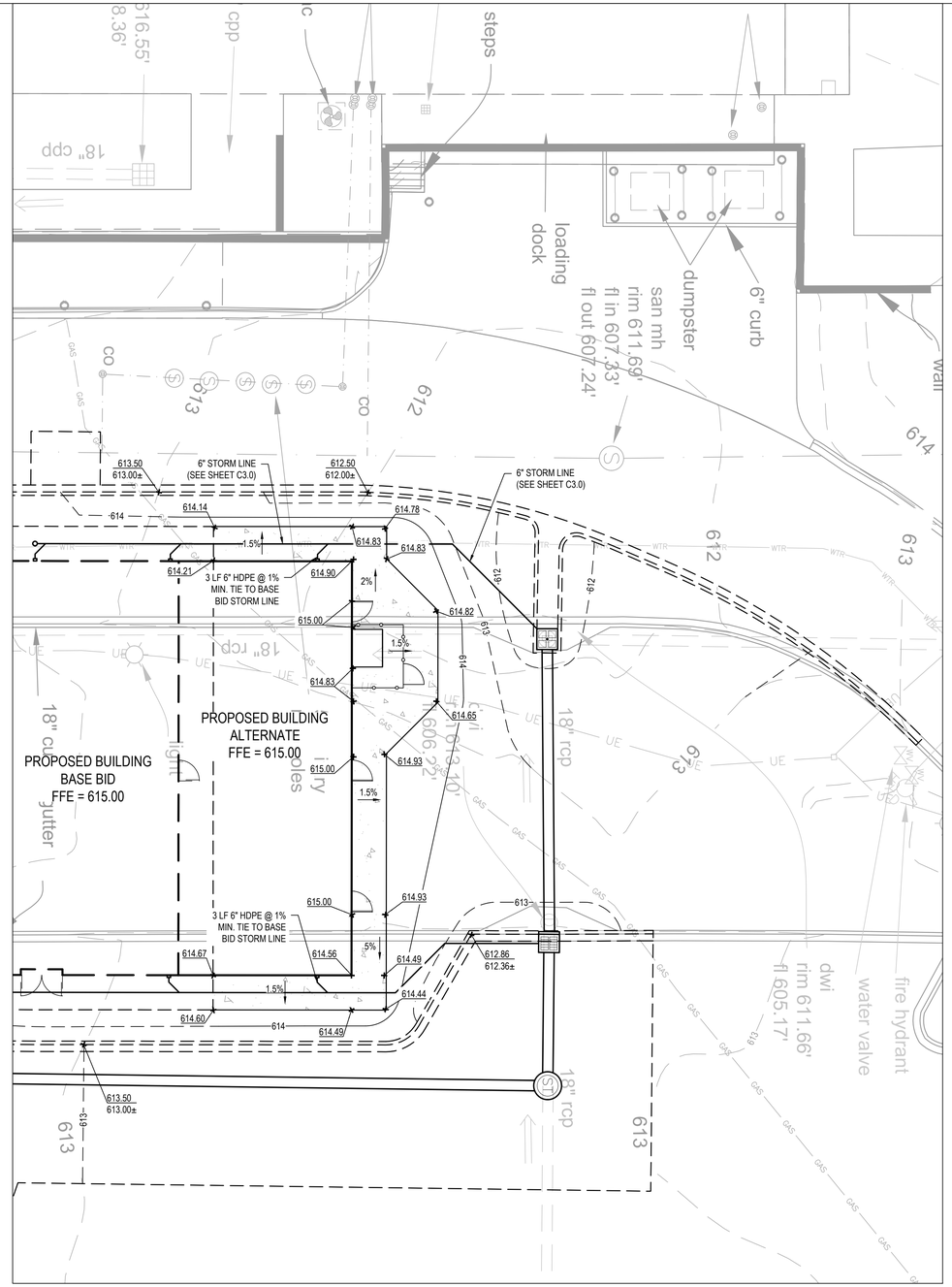

GRADING + DRAINAGE LEGEND

101		MINOR CONTOUR
100		MAJOR CONTOUR
102		BASE BID MAJOR CONTOUR
TOP OF CURB / BOTTOM OF CURB		SPOT ELEVATION
		STORM DRAINAGE PIPING (18"Ø OR MORE)
ST		STORM DRAINAGE PIPING (15"Ø OR LESS)
ST	STMH	STORM SEWER MANHOLE
GI	GI	GRATE INLET
AD	AD	AREA DRAIN INLET
HGI	HGI	HOODED GRATE INLET
RD	RD	ROOF DRAIN

NOTES:
1. SEE SHEET C0.1 FOR ALL APPLICABLE NOTES.
2. SEE SHEET C3.0 FOR BASE BID DRAINAGE AND GRADING PLAN
3. SEE SHEET C5.0 FOR EROSION CONTROL PLAN.

SCALE: 1"=10'

LBYD, Inc.
Civil and Structural Engineers
880 Montclair Road
Suite 600
Birmingham, AL 35213
Main (205) 251-4500

PROJECT NO. 131864

© copyright 2022
These drawings and design intent are the sole property of LBYD, Inc. which may not be reproduced without written permission

LATHAN ARCHITECTS
LATHAN ▪ BRYANT ▪ CALMA

NEW JROTC FACILITY FOR PLEASANT GROVE HIGH SCHOOL

100 SPARTAN DRIVE, PLEASANT GROVE, AL 35127
JEFFERSON COUNTY BOARD OF EDUCATION

ALABAMA LICENSED No. 24443 PROFESSIONAL ENGINEER CHRISTOPHER ALLEN HOLT 2/1/2022

SHEET TITLE:
LAYOUT, GRADING & DRAINAGE PLAN ALTERNATE

PROJ. MGR.:	CAH
DRAWN:	LBH
DATE:	FEBRUARY 1, 2022
REVISIONS	

JOB NO. 21-66

SHEET NO:
C6.0
7 OF 9

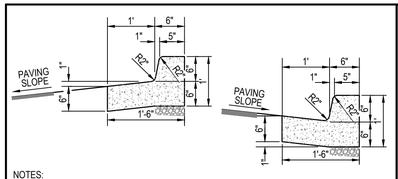

NOTES:
1. SLOPE GUTTER AS SHOWN ACCORDING TO PAVING SLOPE. THIS SLOPE SHALL NOT EXCEED 5% TO COMPLY WITH ADA REQUIREMENTS AT ANY HANDICAP RAMP.
2. PROVIDE EXPANSION JOINTS WITH PREFORMED JOINT FILLER MATERIAL CUT TO MATCH SHAPE OF CURB AND GUTTER OF AT LEAST 1/2 INCH IN WIDTH AT INTERVALS NOT LESS THAN 30' NOR GREATER THAN 100' AND AT P.C.'S AND P.T.'S OF ALL CURVES, AT STRUCTURES (CURB INLETS, WHEELCHAIR RAMPS, ETC.).
3. SAWCUT 3/16" JOINTS AT SPACING NOT LESS THAN 5' AND NOT TO EXCEED 15' JOINT DEPTH SHALL BE 1/4 DEPTH OF CURB/GUTTER. JOINT TO BE PERPENDICULAR TO THE RUN OF THE CURB AND GUTTER.
4. IF ADJACENT TO CONCRETE PAVING SIDEWALK LINE UP JOINTS WITH ADJACENT CONCRETE JOINTS.
5. 3,500 PSI CONCRETE UNLESS STATED OTHERWISE.
6. PROVIDE 6" CRUSHED STONE BASE UNDER ALL CURBS AND GUTTERS.
7. VERIFY SHAPE OF CURB TO MATCH ANY EXISTING CONDITIONS OR LOCAL STANDARDS.

18" CURB & GUTTER
N.T.S.

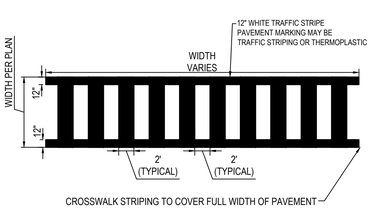

NOTES:
1. CROSSWALK LINES SHALL CONSIST OF SOLID WHITE LINES THAT MARK THE CROSSWALK. THE LINES SHALL NOT BE LESS THAN 2 FEET IN WIDTH.
2. CROSSWALK LINES SHOULD EXTEND THE FULL WIDTH OF PAVEMENT FROM CURB TO CURB OR TO THE EDGE OF THE INTERSECTING CROSSWALK.
3. FOR ADDED VISIBILITY, THE CROSSWALK AREA MAY BE MARKED WITH WHITE DIAGONAL LINES AT 45 DEGREE ANGLE TO THE LINE OF THE CROSSWALK.

PEDESTRIAN CROSSWALK
N.T.S.

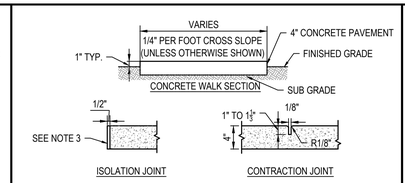

NOTES:
1. CONTRACTION (SAW CUT) JOINTS TO BE EVERY 5 TO 8 FEET WITH A MAXIMUM SPACING OF TWICE THE SLAB THICKNESS IN FEET; CUT TO A DEPTH OF 1" MINIMUM TO 1 ¼" MAXIMUM.
2. CUT CONTRACTION JOINTS BETWEEN 2 HOURS AND 12 HOURS OF CONCRETE PLACEMENT.
3. PLACE ISOLATION JOINTS WHEN ADJACENT TO BUILDINGS, CURBS, ETC. USE A ½" THICK PRE-MOULDED EXPANSION JOINT FILLER CONFORMING TO ASTM D1751 OR D1752 TO CREATE A BOND BREAK. INSTALL JOINT SEALER OVER JOINT FILLER.
4. CONCRETE TO BE 4000 PSI COMPRESSIVE STRENGTH UNLESS OTHERWISE NOTED.
5. PLACE SIDEWALK ON COMPACTED SUBGRADE- 98% STANDARD PROCTOR DENSITY (ASTM D698) UNLESS OTHERWISE NOTED.

TYPICAL SIDEWALK DETAIL
N.T.S.

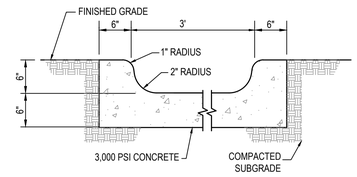

CONCRETE FLUME
N.T.S.

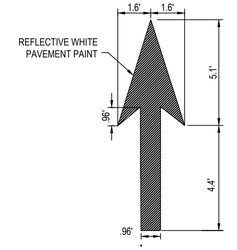

PAINTED STRAIGHT ARROW
N.T.S.

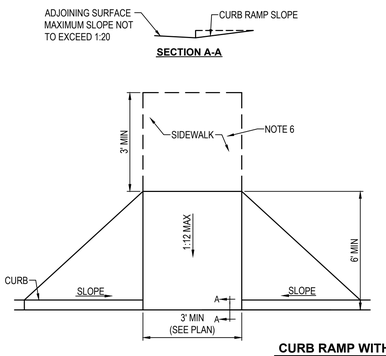

NOTES:
1. ALL WORK SHALL BE IN ACCORDANCE WITH THE 2010 ADA STANDARDS FOR ACCESSIBLE DESIGN (INCLUDING CONTRASTING TEXTURES, AS REQUIRED).
2. TEXTURES SHALL CONSIST OF EXPOSED CRUSHED STONE AGGREGATE, ROUGHENED CONCRETE, RUBBER, RAISED ABRASIVE STRIPS, OR GROOVES EXTENDING THE FULL WIDTH AND DEPTH OF THE CURB RAMP. SURFACES THAT ARE RAISED, ETCHED, OR GROOVED IN A WAY THAT WOULD ALLOW WATER TO ACCUMULATE ARE PROHIBITED.
3. FOR PURPOSES OF WARNING, THE FULL WIDTH AND DEPTH OF CURB RAMPS SHALL HAVE A LIGHT REFLECTIVE VALUE AND TEXTURE THAT SIGNIFICANTLY CONTRASTS WITH THAT OF ADJOINING PEDESTRIAN ROUTES.
4. AT RAMPS OPPOSITE OUT-SWING DOORS, MINIMUM DISTANCE TO WALL IS 60".
5. CURB RAMPS AND THE FLARED SIDES OF CURB RAMPS SHALL BE LOCATED SO THAT THEY DO NOT PROJECT INTO VEHICULAR TRAFFIC LANES,PARKING SPACES , OR PARKING ACCESS AISLES. CURB RAMPS AT MARKED CROSSINGS SHALL BE WHOLLY CONTAINED WITHIN THE MARKINGS, EXCLUDING ANY FLARED SIDES.
6. LANDINGS SHALL BE PROVIDED AT THE TOPS OF CURB RAMPS. THE LANDING CLEAR LENGTH SHALL BE 36 INCHES MINIMUM. THE LANDING CLEAR WIDTH SHALL BE AT LEAST AS WIDE AS THE CURB RAMP, EXCLUDING FLARED SIDES, LEADING TO THE LANDING.
7. RAMP FLARES SHALL BE NO STEEPER THAN 1:10. (FOR ALTERATIONS WHERE THERE IS NO LANDING, FLARE SLOPE SHALL BE NO STEEPER THAN 1:12.

CURB RAMP WITH SIDE FLARES
N.T.S.

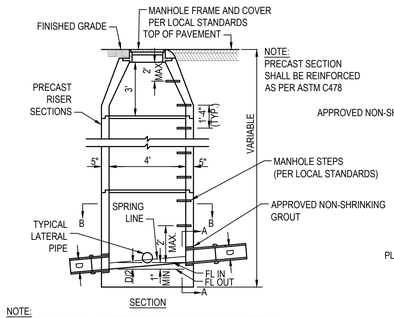

NOTE:
PRECAST SECTION SHALL BE REINFORCED AS PER ASTM C478

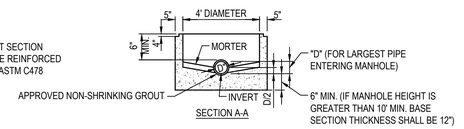

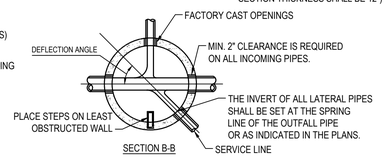

NOTE:
BASE SECTION SHALL BE SET ON FOUNDATION OF COMPACTED NO. 57 OR NO. 67 COMPACTED STONE AGGREGATE A MINIMUM OF 12" THICKNESS AND COVERING THE ENTIRE BOTTOM OF THE EXCAVATION FOR THE MANHOLE.

SANITARY SEWER MANHOLE
N.T.S.

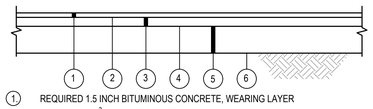

1. REQUIRED 1.5 INCH BITUMINOUS CONCRETE, WEARING LAYER (ALDOT 424A - ¾" MAX AGGREGATE SIZE)
2. REQUIRED TACK COAT (ALDOT 405).
3. REQUIRED 2 INCHES BITUMINOUS CONCRETE, BINDER LAYER (ALDOT 424B- 1" MAX AGGREGATE SIZE).
4. REQUIRED BITUMINOUS TREATMENT (PRIME) (ALDOT 401, TYPE A)
5. REQUIRED 6 INCHES CRUSHED AGGREGATE BASE COURSE, TYPE B, (ALDOT 825).
6. SUBGRADE: TOP 12 INCHES - 98% COMPACTION ASTM D-698.

NOTE: ALL MIX DESIGNS ARE PER THE "ALABAMA DEPARTMENT OF TRANSPORTATION STANDARD SPECIFICATIONS FOR HIGHWAY CONSTRUCTION" - 2018 EDITION.

STANDARD DUTY ASPHALT PAVING
N.T.S.

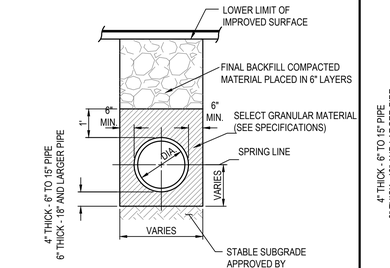

TYPICAL PIPE BEDDING AND INITIAL BACKFILL UNDER IMPROVED SURFACES
N.T.S.

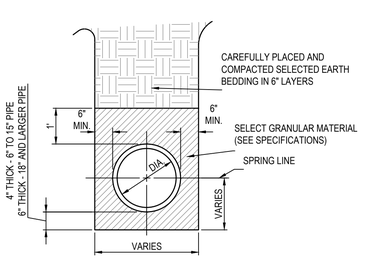

TYPICAL PIPE BEDDING AND INITIAL BACKFILL UNDER UNIMPROVED SURFACES
N.T.S.

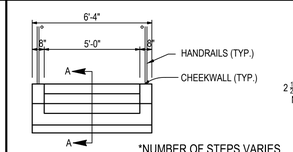

FRONT ELEVATION

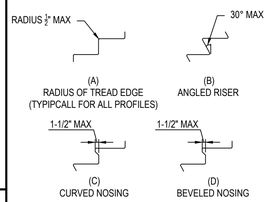

STAIRS NOSING

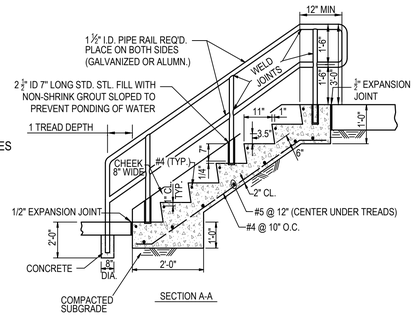

1. RISER/TREAD TO BE PER
2. CONSTRUCT TREADS AND LANDINGS TO PREVENT ACCUMULATION OF WATER
3. HANDRAILS SHALL HAVE 1.5" MIN CLEARANCE TO ADJACENT SURFACES.
4. HAND RAIL TO BE CIRCULAR PIPE RAIL BETWEEN 1 ½" MIN. AND 2" MAX DIAMETER.
5. PIPE RAIL TO BE GALVANIZED STEEL OR ALUMINUM UNLESS OTHERWISE NOTED.
6. EXTENSIONS SHALL NOT BE REQUIRED FOR CONTINUOUS HANDRAILS AT THE INSIDE TURN SWITCHBACK OR DOGLEG STAIRS AND RAMPS.

STAIRS WITH HANDRAILS
N.T.S.

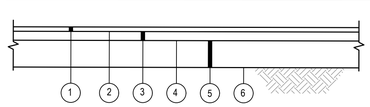

1. REQUIRED 1.5" IMPROVED BITUMINOUS CONCRETE, WEARING LAYER (ALDOT 424A)
2. REQUIRED TACK COAT (ALDOT 405).
3. REQUIRED 2" BITUMINOUS CONCRETE UPPER BINDER LAYER (ALDOT 424B).
4. REQUIRED BITUMINOUS TREATMENT (PRIME) (ALDOT 401, TYPE A).
5. REQUIRED 8" CRUSHED AGGREGATE BASE COURSE, TYPE B, (ALDOT 825).
6. SUBGRADE: TOP 12 INCHES - 98% COMPACTION (ASTM D-698).

NOTE: ALL MIX DESIGNS ARE PER THE "ALABAMA DEPARTMENT OF TRANSPORTATION STANDARD SPECIFICATIONS FOR HIGHWAY CONSTRUCTION" - 2018 EDITION.

HEAVY DUTY ASPHALT PAVING
N.T.S.

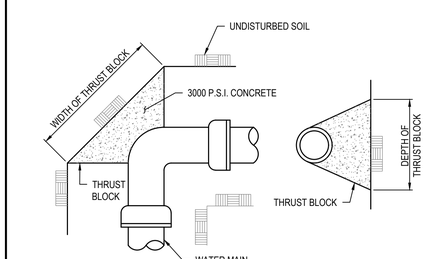

THRUST AT FITTINGS IN POUNDS*

PIPE SIZE	90° BEND	45° BEND	22.5° BEND	TEE OR PLUG
4"	2,666	1,443	735	1,885
6"	5,998	3,246	1,655	4,241
8"	10,663	5,771	2,942	7,540
10"	16,661	9,017	4,597	11,781
12"	23,992	12,984	6,619	16,965
14"	32,655	17,673	9,010	23,091
16"	42,652	23,083	11,768	30,160
18"	53,981	29,214	14,893	38,170
20"	66,643	36,067	18,387	47,124
24"	95,966	51,937	26,477	67,858

*BASED ON 150 PSI TEST PRESSURE

SOIL BEARING LOAD

SOIL	BEARING LOAD P.S.F.
MUCK	0
SOFT CLAY	1,000
SILT	1,500
SANDY SILT	3,000
SAND	4,000
SANDY CLAY	6,000
HARD PAN	9,000

END AREA OF THRUST BLOCK (IN SQUARE FEET) = THRUST (AT FITTING) / SOIL BEARING LOAD (AT FITTING) X 1.5

NOTE: THE WIDTH OF THE THRUST BLOCK SHALL BE 2X THE DEPTH OF THE THRUST BLOCK.

TYPICAL THRUST BLOCK
N.T.S.

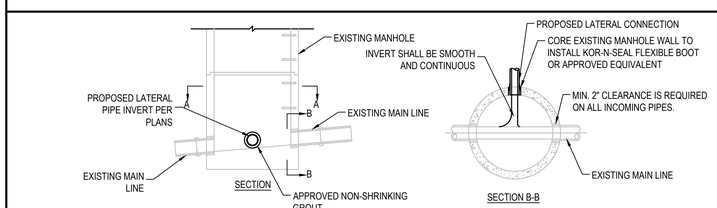

CONNECTION TO EXISTING SANITARY SEWER MANHOLE
N.T.S.

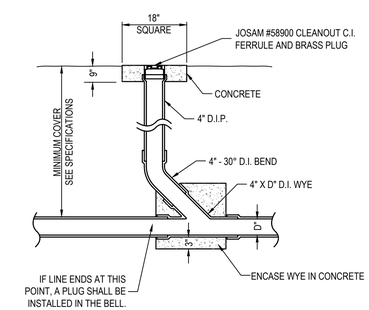

TYPICAL CLEANOUT
N.T.S.

LBYD, Inc.
Civil and Structural Engineers
880 Montclair Road
Suite 600
Birmingham, AL 35213
Main (205) 251-4500
PROJECT NO.
131864

© copyright 2022
These drawings and design intent are the sole property of LBYD, Inc. which may not be reproduced without written permission

LATHAN ARCHITECTS
LATHAN ▪ BRYANT ▪ CALMA

NEW JROTC FACILITY FOR PLEASANT GROVE HIGH SCHOOL

100 SPARTAN DRIVE, PLEASANT GROVE, AL 35127
JEFFERSON COUNTY BOARD OF EDUCATION

ALABAMA LICENSED No. 24443 PROFESSIONAL ENGINEER RIVER ALLEN 2/1/2022

SHEET TITLE:
DETAILS

PROJ. MGR.:	CAH
DRAWN:	LBH
DATE:	FEBRUARY 1, 2022
REVISIONS	

JOB NO. 21-66

SHEET NO:
C7.0
8 OF 9

0 1" 2"

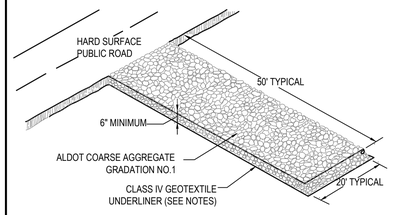

PLAN

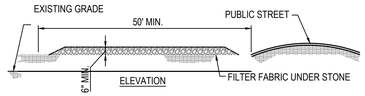

ELEVATION

SPECIAL NOTES :

1. A STABILIZED PAD OF CRUSHED STONE SPREAD OVER FILTER FABRIC SHALL BE LOCATED WHERE TRAFFIC WILL BE ENTERING OR LEAVING A CONSTRUCTION SITE TO OR FROM A PUBLIC STREET. THE STONE SHALL BE ALDOT GRADATION NO. 1 STONE, FILTER FABRIC SHALL BE NONWOVEN GEOTEXTILE CLASS IV OR EQUAL.
2. THE ENTRANCE SHALL BE MAINTAINED IN A CONDITION WHICH WILL PREVENT TRACKING OR FLOWING OF SEDIMENT ONTO PUBLIC STREETS OR EXISTING PAVEMENT. THIS MAY REQUIRE PERIODIC TOP DRESSING WITH ADDITIONAL STONE AS CONDITIONS DEMAND AND REPAIR AND/OR CLEANOUT OF ANY MEASURES USED TO TRAP SEDIMENT.
3. ALL SEDIMENT SPILLED, DROPPED, WASHED OR TRACKED ONTO PUBLIC STREETS MUST BE REMOVED IMMEDIATELY BY STREET CLEANING (NOT FLUSHING). WHEN NECESSARY, WHEELS MUST BE CLEANED TO REMOVE SEDIMENT PRIOR TO ENTERING A PUBLIC STREET. WHEN WASHING IS REQUIRED, IT SHALL BE DONE ON AN AREA STABILIZED WITH CRUSHED STONE WHICH DRAINS INTO AN APPROVED SEDIMENT BASIN.
4. IF THE PAD SLOPE TOWARDS THE ROAD EXCEEDS 2%, A DIVERSION RIDGE 6" - 8" HIGH WITH 3:1 SIDE SLOPES MUST BE CONSTRUCTED ACROSS THE FOUNDATION APPROXIMATELY 15' AWAY FROM THE ROAD AND DRAIN INTO A SEDIMENT TRAP OR BASIN.

CEP **CONSTRUCTION EXIT PAD**
N.T.S.

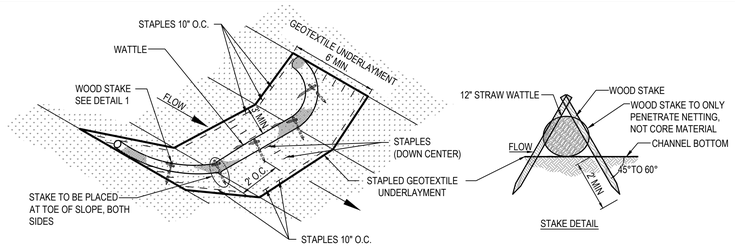

WATTLE CHECK DAMS TO BE INSTALLED WITHOUT TRENCHING AND ON TOP OF STAPLED GEOTEXTILE UNDERLAYMENT THAT EXTENDS A MINIMUM 3 FT. UP AND DOWNSTREAM FROM THE WATTLE. WATTLES MUST BE PROPERLY STAPLED WITH SOD STAPLES ON 10-INCH CENTERS ON EACH SIDE OF THE WATTLE TO PREVENT FLOTATION AND STAKED OVER THE TOP USING NON-DESTRUCTIVE TEE-PEE TYPE STAKING

WATTLE SPACING

REFER TO ALDOT SPECIAL DRAWING NO. ESC-300 FOR RECOMMENDED PLACEMENT INTERVAL BETWEEN WATTLES

STAKE DETAIL

CdW **WATTLE CHECK DAM**
N.T.S.

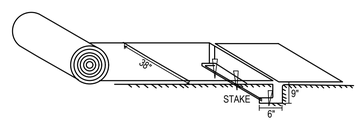

PICTORIAL VIEW OF TRANSVERSE SLOT

INSTALLATION:

1. START AT DOWNSTREAM TERMINAL AND PROGRESS UPSTREAM.
2. FIRST ROLL IS CENTERED LONGITUDINALLY IN MID CHANNEL AND PINNED WITH TEMPORARY STAKES TO MAINTAIN ALIGNMENT.
3. SUBSEQUENT ROLLS FOLLOW IN STAGGERED SEQUENCE BEHIND FIRST ROLL. USE CENTER ROLL FOR ALIGNMENT TO CHANNEL CENTER.
4. WORK OUTWARDS FROM CHANNEL CENTER TO EDGE.
5. USE 3" OVERLAP AND STAKE AT 5' INTERVALS ALONG SEAMS.
6. USE 3' OVERLAPS AND SHINGLE DOWNSTREAM TO CONNECT LINING AT ROLL ENDS.
7. ANCHOR PRODUCTS SO THAT A CONTINUOUS, FIRM CONTACT (NO TENTING) WITH THE SOIL SURFACE/SEED BAD IS MAINTAINED.

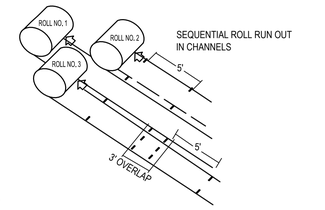

MAINTENANCE
INSPECT AFTER STORM EVENTS UNTIL VEGETATION IS ESTABLISHED FOR EROSION OR UNDERMINING BENEATH BLANKETS. IF ANY AREA SHOWS EROSION, PULL BACK THAT PORTION OF THE BLANKET, ADD TAMPED SOIL AND RESEED; THEN RESECURE THE BLANKETS

IF BLANKETS SHOULD BECOME DISLOCATED OR DAMAGED, REPAIR OR REPLACE AND RESECURE IMMEDIATELY.

ECB **EROSION CONTROL BLANKET**
N.T.S.

NOTE:
1.STABLE OUTLETS SHALL BE PROVIDED FOR EACH DIVERSION.

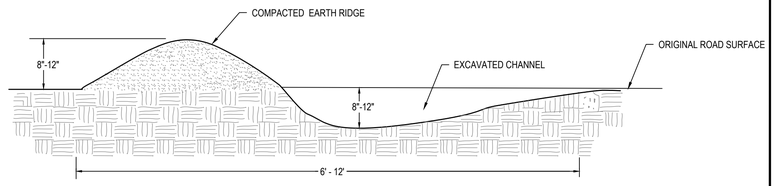

Di **TEMPORARY DIVERSION BERM**
N.T.S.

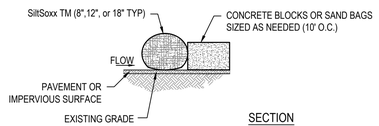

SECTION

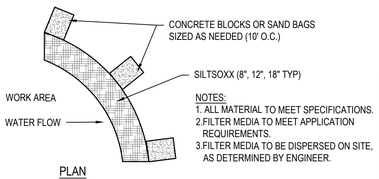

PLAN

NOTES:
1. ALL MATERIAL TO MEET SPECIFICATIONS.
2.FILTER MEDIA TO MEET APPLICATION REQUIREMENTS.
3.FILTER MEDIA TO BE DISPERSED ON SITE, AS DETERMINED BY ENGINEER.

SX **SiltSoxxTM for Sediment Control on Pavement**
N.T.S.

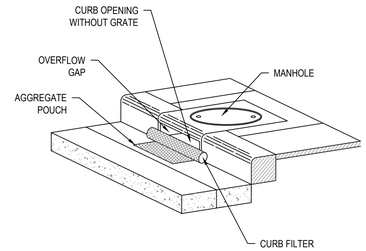

IP1 **DANDY CURB**
N.T.S.

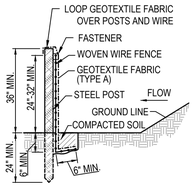

SIDE VIEW

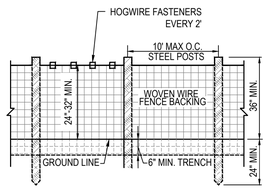

FRONT VIEW

SPECIAL NOTES:
1. SILT FENCE FABRIC SHALL BE PER TABLE SB-1 FROM THE LATEST ALABAMA EROSION CONTROL HANDBOOK.
2. USE D.O.T. APPROVED WOVEN WIRE FENCE.
3. USE 5' MIN. STEEL POSTS (1.3 LB/FT MIN.).

NOTES:
1. THE WOVEN WIRE FENCING SHALL BE FASTENED TO THE UPSTREAM SIDE OF POSTS BY STAPLES OF WIRE TIES.
2. GEOTEXTILE FABRIC SHALL BE SECURELY FASTENED TO THE WOVEN WIRE FENCING.

MAINTENANCE SCHEDULE:
REMOVE SEDIMENT DEPOSITS WHEN THEY REACH A DEPTH OF 15" OR 1/2 THE HEIGHT OF THE FENCE AS INSTALLED TO PROVIDE ADEQUATE STORAGE VOLUME FOR THE NEXT RAIN AND TO REDUCE PRESSURE ON THE FENCE. SHOULD THE FABRIC OR SILT FENCE COLLAPSE, TEAR, DECOMPOSE OR BECOME INEFFECTIVE, REPLACE IT PROMPTLY.

SB **SILT FENCE - TYPE A**
N.T.S.

ADEM

MAINTENANCE SCHEDULE:
REMOVE SEDIMENT DEPOSITS PROMPTLY AFTER IT HAS ACCUMULATED TO 1/2 OF THE ORIGINAL CAPACITY, TAKING CARE NOT TO UNDERMINE THE ENTRENCHED WATTLES. INSPECT PERIODICALLY FOR DETERIORATION OR DAMAGE FROM CONSTRUCTION ACTIVITIES. REPAIR DAMAGED BARRIER IMMEDIATELY.

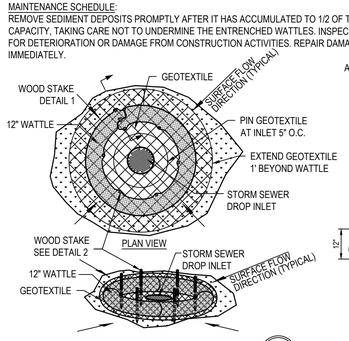

PLAN VIEW

DROP INLET PROTECTION

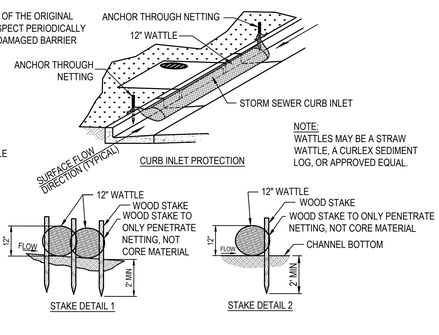

CURB INLET PROTECTION

NOTE:
WATTLES MAY BE A STRAW WATTLE, A CURLEX SEDIMENT LOG, OR APPROVED EQUAL.

STAKE DETAIL 1

STAKE DETAIL 2

WIP **WATTLE INLET RPOTECTION**
N.T.S.

LBYD, Inc.
Civil and Structural Engineers
880 Montclair Road
Suite 600
Birmingham, AL 35213
Main (205) 251-4500

© copyright 2022
These drawings and design intent are the sole property of LBYD, Inc. which may not be reproduced without written permission

LATHAN ARCHITECTS
LATHAN ▪ BRYANT ▪ CALMA

NEW JROTC FACILITY FOR PLEASANT GROVE HIGH SCHOOL

100 SPARTAN DRIVE, PLEASANT GROVE, AL 35127
JEFFERSON COUNTY BOARD OF EDUCATION

ALABAMA LICENSED
No. 24443
PROFESSIONAL ENGINEER
CHRISTOPHER ALLEN HOWARD
2/1/2022

SHEET TITLE:
EROSION CONTROL DETAILS

PROJ. MGR.:	CAH
DRAWN:	LBH
DATE:	FEBRUARY 1, 2022
REVISIONS	

JOB NO. 21-66

SHEET NO:

C7.1

9 OF 9

0 1" 2"

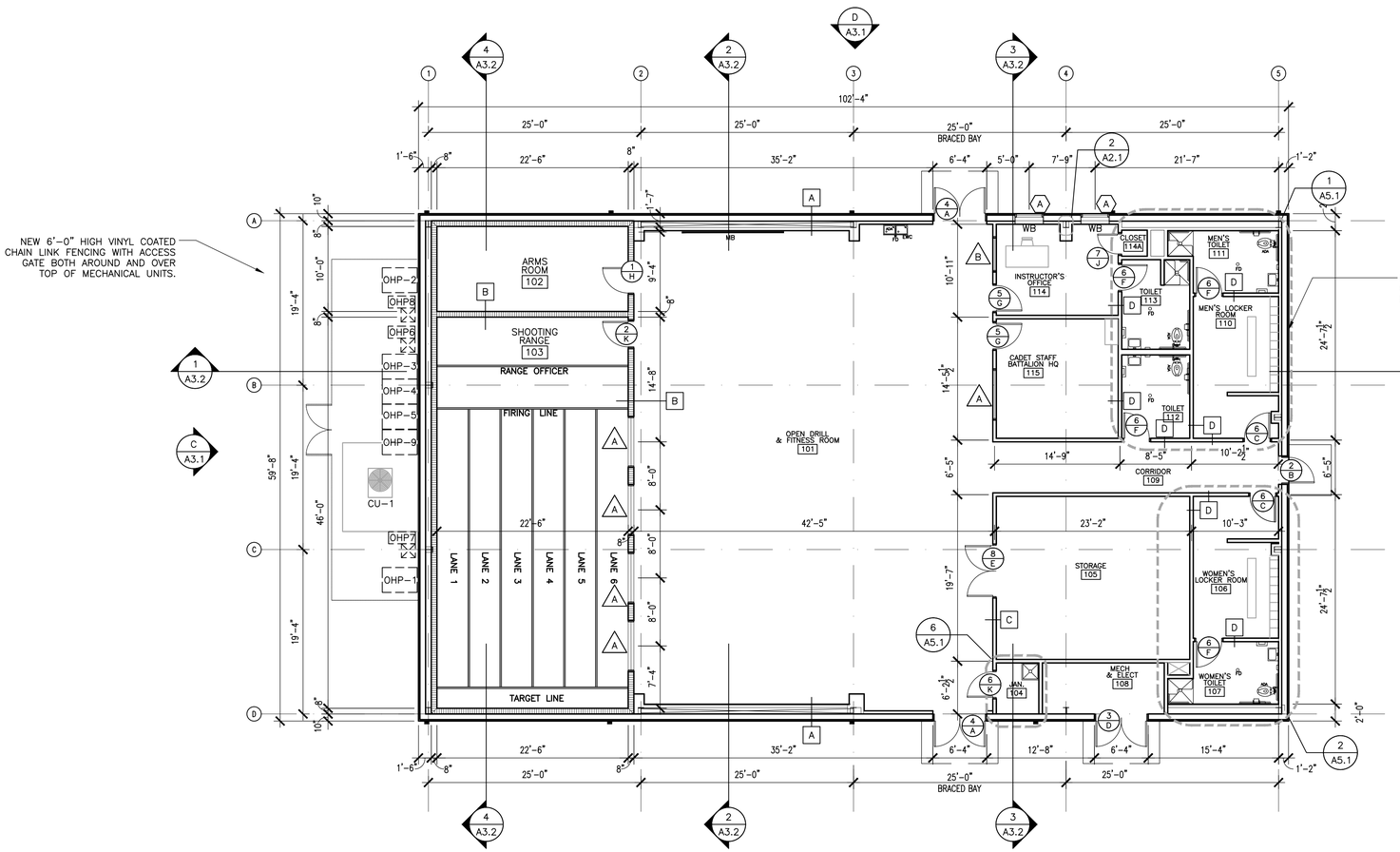

1 FLOOR PLAN - BASE BID

1/8" = 1'-0"

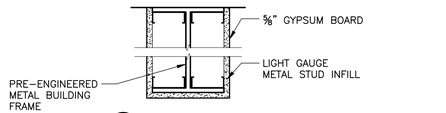

2 COLUMN WRAP DETAIL

1-1/2" = 1'-0"

WALL TYPE LEGEND

A	PRE-ENGINEERED METAL BUILDING FRAME WITH METAL PANELS AT EXTERIOR AND R-25 VINYL FACED INSULATION SYSTEM AS SPECIFIED INSTALL ½" PLYWOOD UP TO 8'-0"
B	8" CMU WALL TO 14'-0" AFF.
C	NEW 3⅝" METAL STUD WALL WITH ⅝" HIGH IMPACT GYPSUM BOARD EACH SIDE AND SOUND ATTENUATION BATT INSULATION.
D	NEW 3⅝" METAL STUD WALL WITH ⅝" HIGH IMPACT GYPSUM BOARD EACH SIDE AND SOUND ATTENUATION BATT INSULATION TO EXTEND TO ROOF DECK.

GENERAL NOTES

EXTEND & KEY RATED WALLS TO BOTTOM OF ROOF DECK - SEE LIFE SAFETY DRAWINGS FOR RATED WALL LOCATIONS.	SLOPE FINISH FLOOR TO FLOOR DRAINS
COORDINATE W/ ELECTRICAL & MECHANICAL AND PROVIDE CONCRETE EQUIPMENT PAD AS REQUIRED	PAINT ALL EXPOSED CMU SURFACES AND PEMB FRAME
WINDOWS ARE DIMENSIONED TO THE CENTER LINE	SEE ELEVATIONS AND ROOF PLAN FOR DOWNSPOUT LOCATIONS
SLOPE ALL SIDEWALKS AWAY FROM THE BUILDING	SEE CIVIL DRAWINGS FOR CONTINUATION OF SIDEWALKS
THE G.C. IS RESPONSIBLE FOR REPAIRING ANY DAMAGES TO EXISTING LANDSCAPING RESULTING FROM NEW WORK.	ALL PLAN DIMENSIONS ARE TO FACE OF CMU AND TO CENTER LINE OF STUDS

DOOR PLACEMENT LEGEND

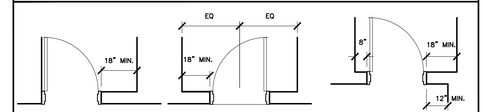

SYMBOLS LEGEND

A200	ROOM NUMBER	1C / A	DOOR TYPE / DOOR RATING / HARDWARE SYMBOL
+	INTERIOR FLOOR ELEVATION	A / A1.1	ELEV. MARK / SHEET NUMBER
F.D.	FLOOR DRAIN	1 / A1.1	SECT. MARK / SHEET NUMBER
EWC	ELECTRIC WATER COOLER	1	EXTERIOR WINDOW
	NEW DOOR AND SWING	5 / A5.1	ELEV. MARK / SHEET NUMBER / INT. ELEVATION
WB	WINDOW BLINDS		

LATHAN ARCHITECTS
LATHAN ▪ BRYANT ▪ CALMA

NEW JROTC FACILITY FOR PLEASANT GROVE HIGH SCHOOL

100 SPARTAN DRIVE, PLEASANT GROVE, ALABAMA 35127
JEFFERSON COUNTY BOARD OF EDUCATION

STATE OF ALABAMA
No. 3365
RICK N. LATHAN
REGISTERED ARCHITECT

SHEET TITLE:
FLOOR PLAN, LEGENDS, AND DETAIL - BASE BID

PROJ. MGR.: R. VERNON
DRAWN: K. SIMPSON
DATE: FEBRUARY 1, 2022
REVISIONS

JOB NO. 21-66
SHEET NO:
A2.1
1 OF 16

0 1" 2"

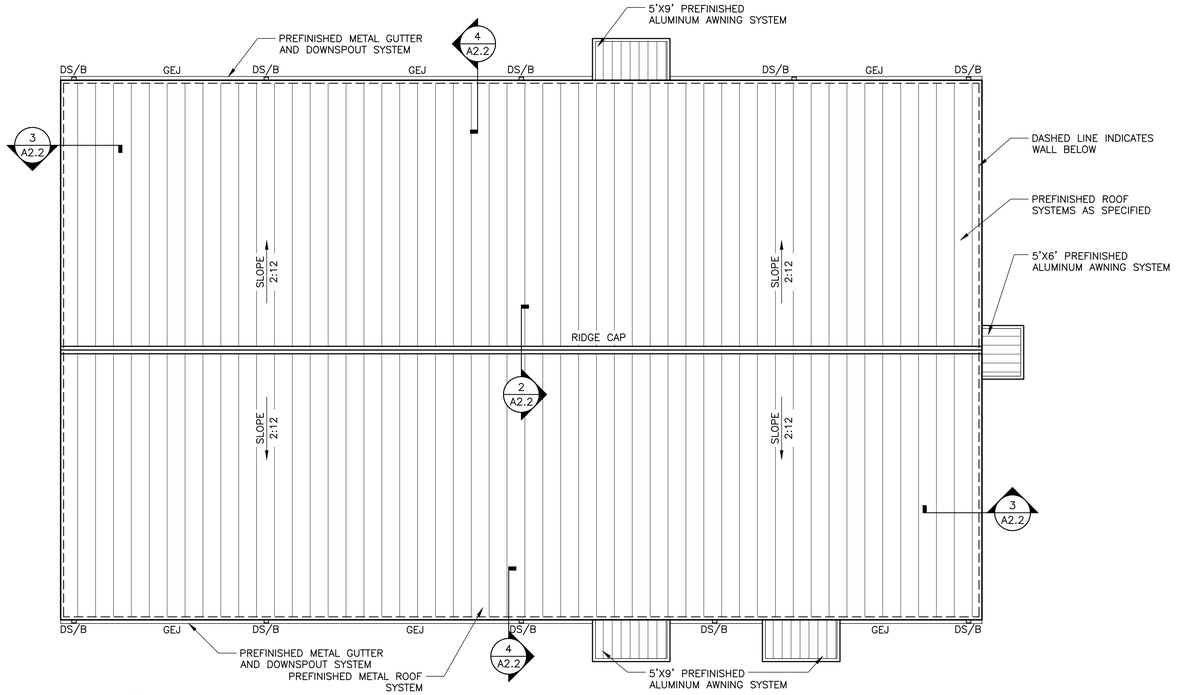

1 ROOF PLAN - BASE BID

1/8" = 1'-0"

ROOF GENERAL NOTES

1. DOWNSPOUTS SHOWN ON THIS SHEET ARE SHOWN AS REFERENCE ONLY. CONTRACTOR TO SEE ELEVATIONS FOR DOWNSPOUT LOCATIONS AND TO AVOID ANY CONFLICT WITH DOORS, WINDOWS, AND HEAVY TRAFFIC AREAS.
2. COORDINATE WITH PLUMBING, MECHANICAL AND ELECTRICAL FOR ROOF PENETRATIONS. FLASH ALL PENETRATIONS. ROOFING CONTRACTOR SHALL MAINTAIN SINGLE SOURCE RESPONSIBILITY FOR WEATHER TIGHTNESS OF ROOF PENETRATIONS AS PART OF ROOFING SYSTEM ENVELOPE

ROOF LEGEND

DETAIL NUMBER / SHEET NUMBER — ROOF DETAIL MARKER	
DIRECTION OF DOWNWARD SLOPE / 1/4:12 / RISE:RUN — ROOF SLOPE MARKER	
DS/SB	DOWNSPOUT W/SPLASHBLOCK
DS/B	DOWNSPOUT WITH BOOT
GEJ	GUTTER EXPANSION JOINT
PV	PLUMBING VENT
EF	EXHAUST FAN
EV	EXHAUST VENT
CA	COMBUSTION AIR DUCT

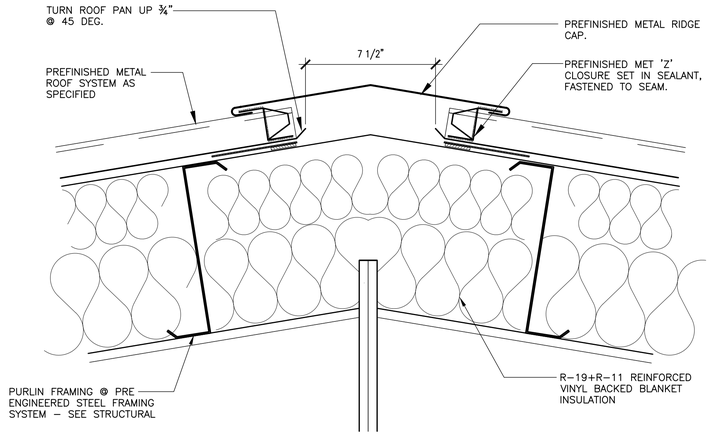

2 DETAIL @ TYPICAL RIDGE

3" = 1'-0"

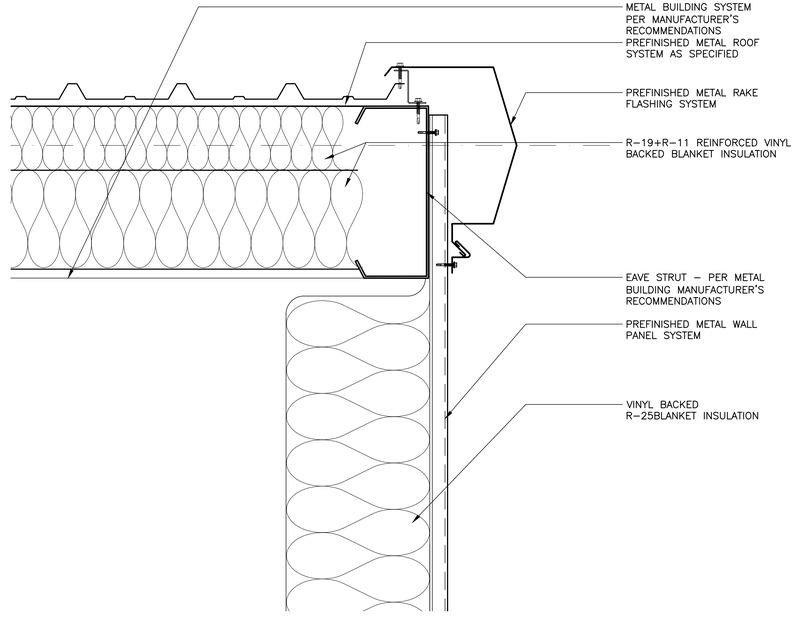

3 DETAIL @ TYPICAL RAKE

3" = 1'-0"

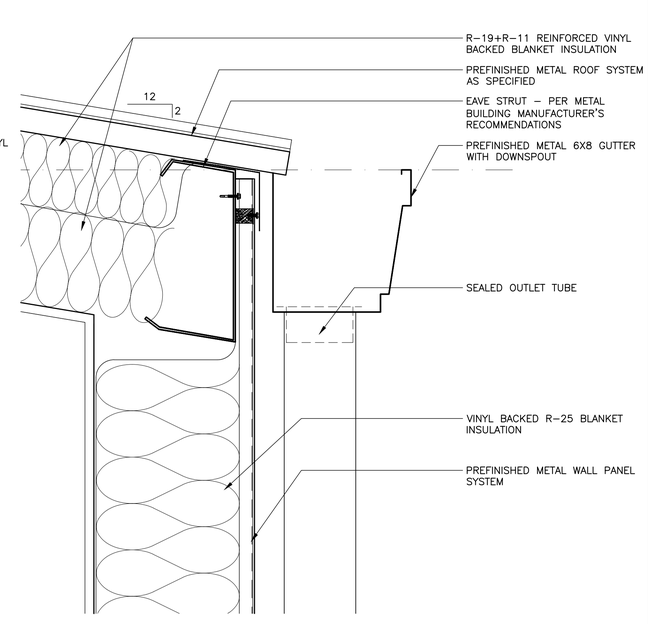

4 DETAIL @ TYPICAL EAVE

3" = 1'-0"

LATHAN ARCHITECTS
LATHAN ▪ BRYANT ▪ CALMA

NEW JROTC FACILITY FOR PLEASANT GROVE HIGH SCHOOL

100 SPARTAN DRIVE, PLEASANT GROVE, ALABAMA 35127
JEFFERSON COUNTY BOARD OF EDUCATION

STATE OF ALABAMA
No. 3365
RICK N. LATHAN
REGISTERED ARCHITECT

SHEET TITLE:
ROOF PLAN, LEGENDS, AND DETAILS - BASE BID

PROJ. MGR.: R. VERNON
DRAWN: K. SIMPSON
DATE: FEBRUARY 1, 2022
REVISIONS

JOB NO. 21-66
SHEET NO:
A2.2
2 OF 16

0 1" 2"

DOOR AND WINDOW LEGEND	
CSG	3/4" THICK CLEAR TEMPERED SAFETY GLASS.
CFG	CLEAR FIRE RATED SAFETY GLASS AS SPECIFIED.
TSG	TINTED INSULATED TEMPERED SAFETY GLASS AS SPECIFIED. 1" TYPICAL UNLESS NOTED OTHERWISE.
HMD	HOLLOW METAL DOOR
HMF	HOLLOW METAL FRAME
FV	FIELD VERIFY

DOOR FIRE RATING LEGEND		
DOOR TYPE	(2)	NO RATING
DOOR TYPE + A	(2A)	20 MINUTE RATING
DOOR TYPE + B	(2B)	45 MINUTE RATING
DOOR TYPE + C	(2C)	60 MINUTE RATING
DOOR TYPE + D	(2D)	90 MINUTE RATING
DOOR TYPE + E	(2E)	180 MINUTE RATING

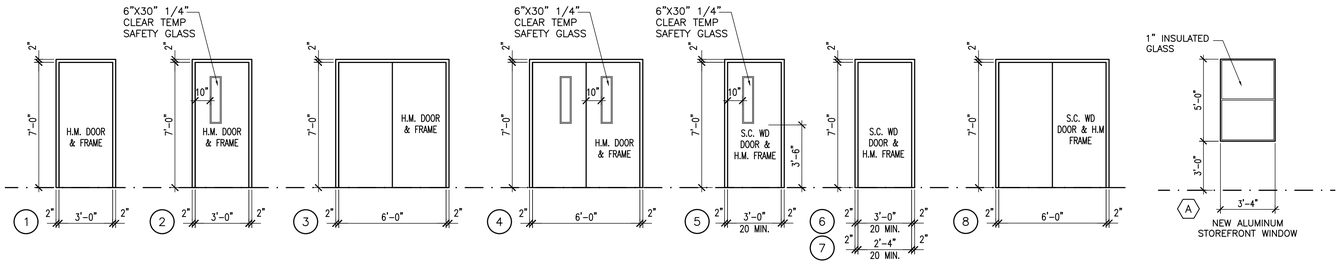

1 DOOR SCHEDULE
SCALE: 1/4" = 1'-0"

2 WINDOW SCHEDULE
SCALE: 1/4" = 1'-0"

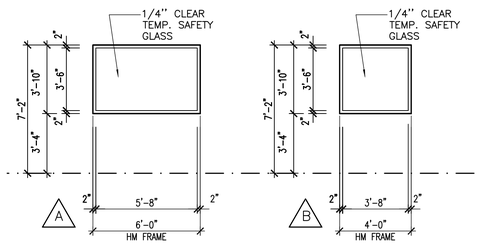

3 INTERIOR HOLLOW FRAME WINDOWS
SCALE: 1/4" = 1'-0"

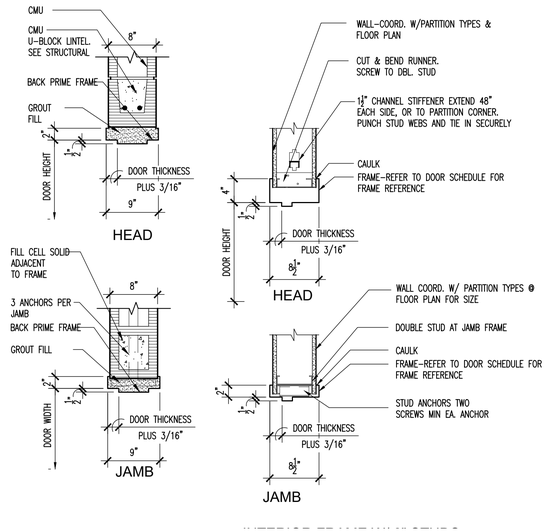

4 HOLLOW METAL FRAME DETAILS
SCALE: 1" = 1'-0"

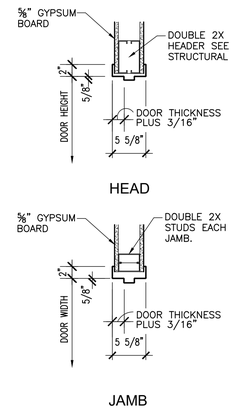

5 METAL STUD FRAME DETAILS
SCALE: 1" = 1'-0"

LATHAN ARCHITECTS
LATHAN ▪ BRYANT ▪ CALMA

NEW JROTC FACILITY FOR PLEASANT GROVE HIGH SCHOOL
100 SPARTAN DRIVE, PLEASANT GROVE, ALABAMA 35127
JEFFERSON COUNTY BOARD OF EDUCATION

STATE OF ALABAMA
No. 3365
RICK N. LATHAN
REGISTERED ARCHITECT

SHEET TITLE:
DOOR AND WINDOW SCHEDULE, LEGENDS, AND DETAILS

PROJ. MGR.: R. VERNON
DRAWN: K. SIMPSON
DATE: FEBRUARY 1, 2022
REVISIONS

JOB NO. 21-66
SHEET NO:
A2.3
3 OF 16

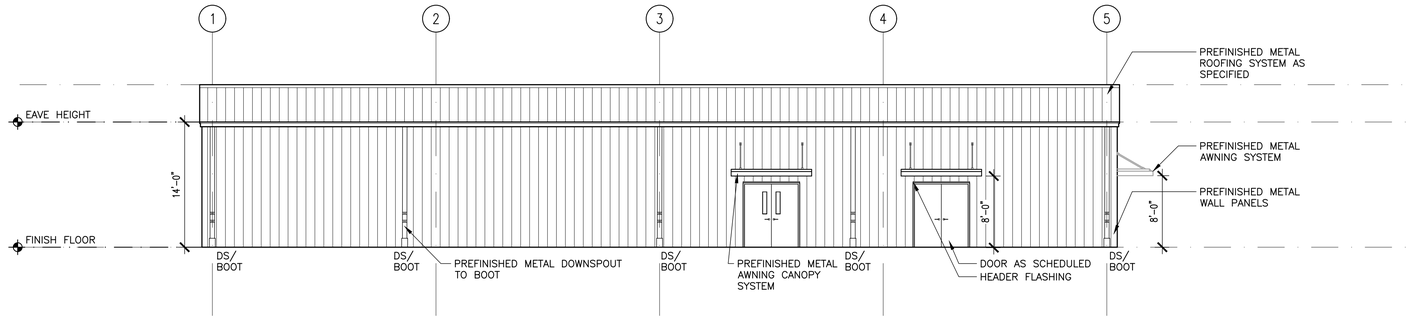

A BUILDING ELEVATION - BASE BID

1/8" = 1'-0"

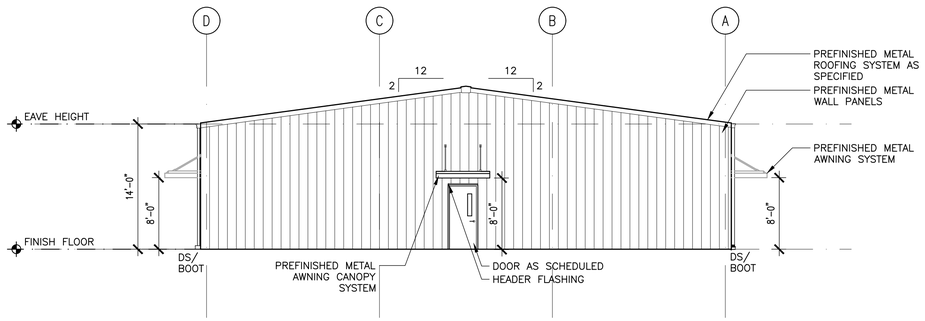

B BUILDING ELEVATION - BASE BID

1/8" = 1'-0"

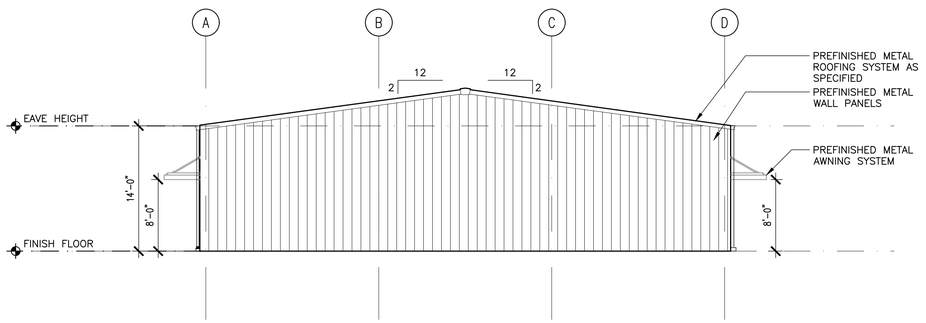

C BUILDING ELEVATION - BASE BID

1/8" = 1'-0"

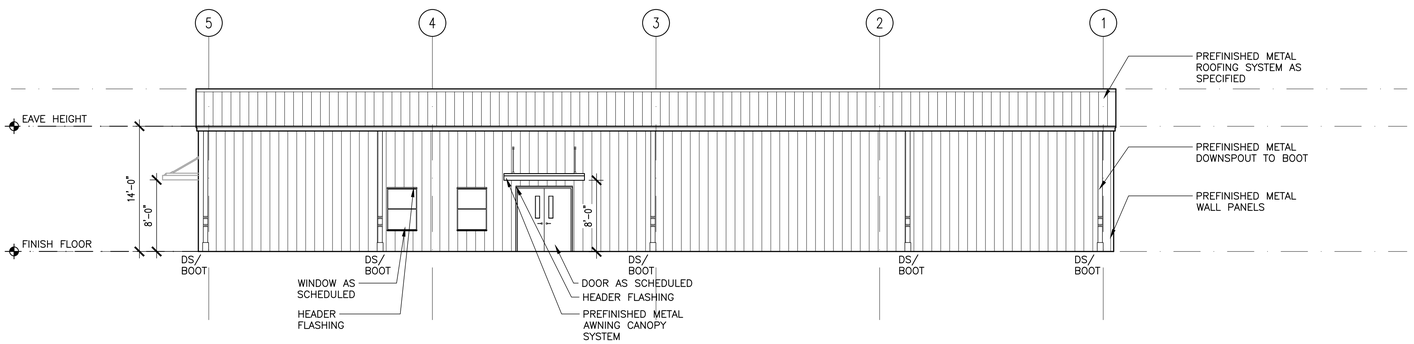

D BUILDING ELEVATION - BASE BID

1/8" = 1'-0"

LATHAN
ARCHITECTS
LATHAN ▪ BRYANT ▪ CALMA

NEW JROTC FACILITY FOR
PLEASANT GROVE HIGH SCHOOL
100 SPARTAN DRIVE, PLEASANT GROVE, ALABAMA 35127
JEFFERSON COUNTY BOARD OF EDUCATION

STATE OF ALABAMA
No. 3365
RICK N. LATHAN
REGISTERED ARCHITECT

SHEET TITLE:
BUILDING ELEVATIONS

PROJ. MGR.:	R. VERNON
DRAWN:	K. SIMPSON
DATE:	FEBRUARY 1, 2022
REVISIONS	

JOB NO. 21-66

SHEET NO:
A3.1
4 OF 16

0 1" 2"

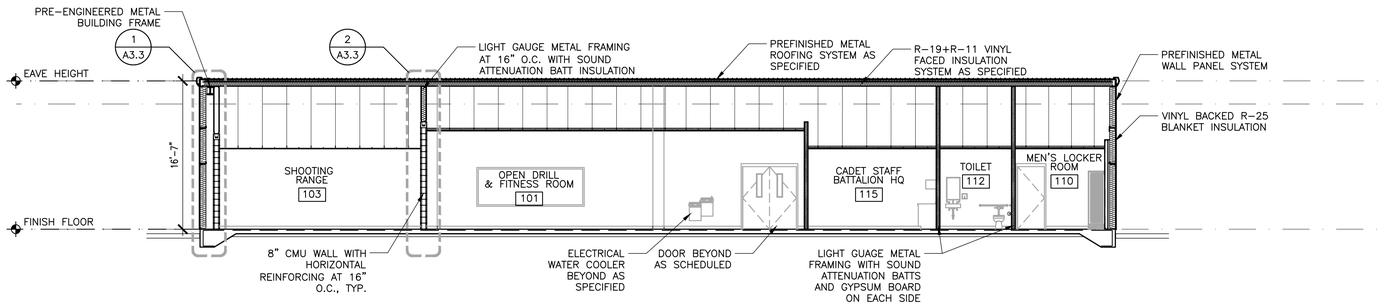

1 BUILDING SECTION - BASE BID

1/8" = 1'-0"

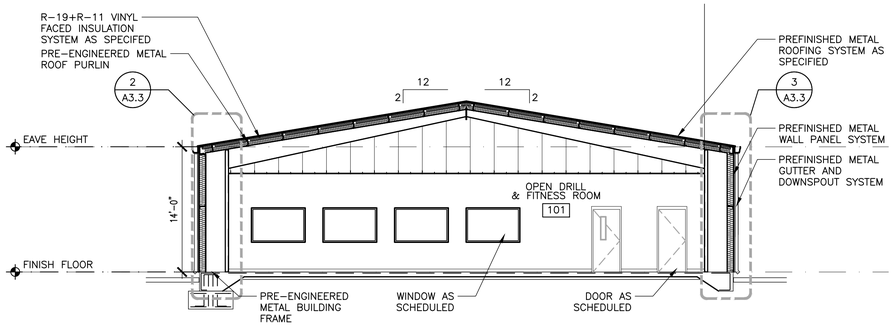

2 BUILDING SECTION - BASE BID

1/8" = 1'-0"

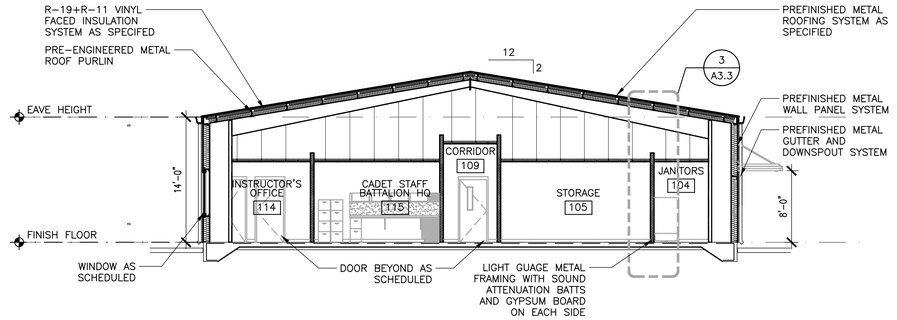

3 BUILDING SECTION - BASE BID

1/8" = 1'-0"

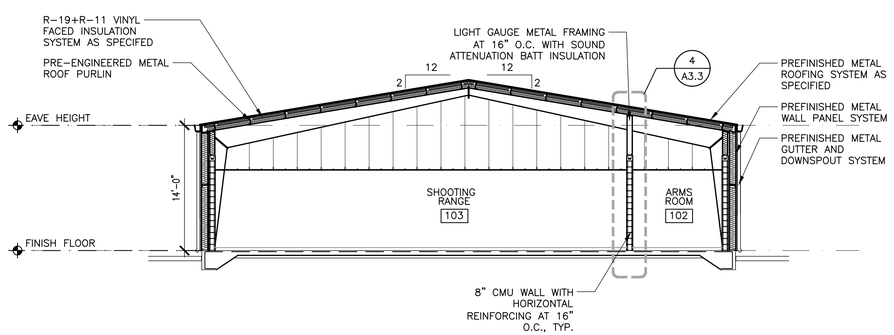

4 BUILDING SECTION - BASE BID

1/8" = 1'-0"

LATHAN
ARCHITECTS
LATHAN ▪ BRYANT ▪ CALMA

NEW JROTC FACILITY FOR PLEASANT GROVE HIGH SCHOOL

100 SPARTAN DRIVE, PLEASANT GROVE, ALABAMA 35127
JEFFERSON COUNTY BOARD OF EDUCATION

STATE OF ALABAMA
No. 3365
RICK N. LATHAN
REGISTERED ARCHITECT

SHEET TITLE:
BUILDING SECTIONS

PROJ. MGR.: R. VERNON
DRAWN: K. SIMPSON
DATE: FEBRUARY 1, 2022
REVISIONS

JOB NO. 21-66
SHEET NO:
A3.2
5 OF 16

0 1" 2"

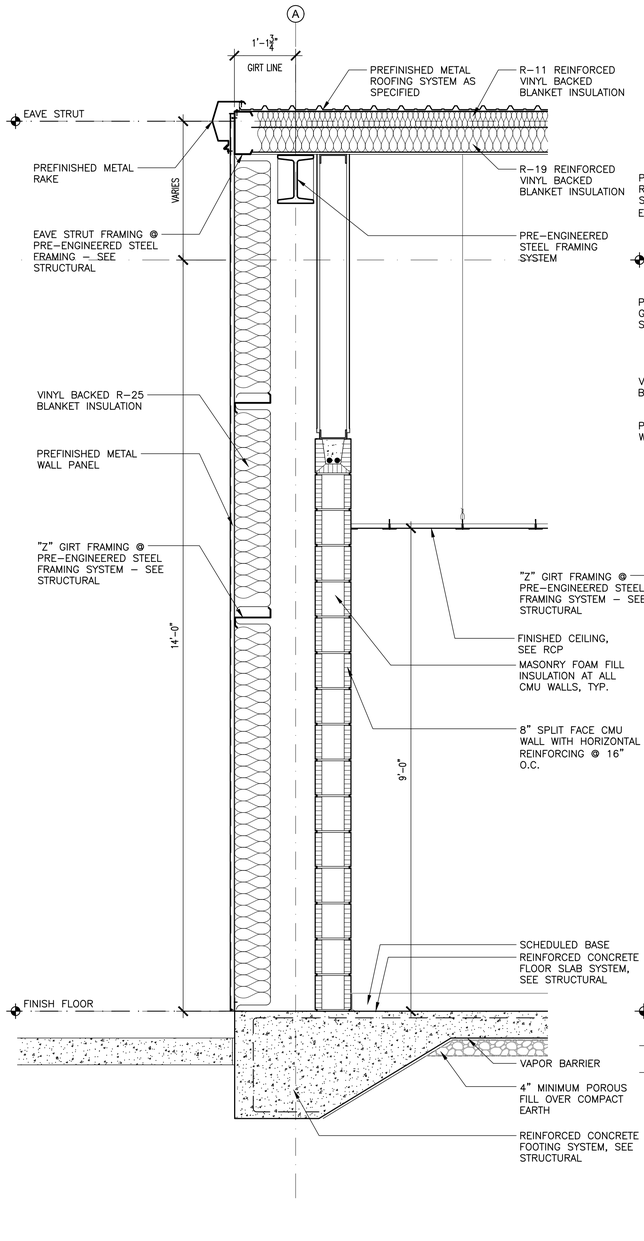

1 WALL SECTION
SCALE: 3/4" = 1'-0"

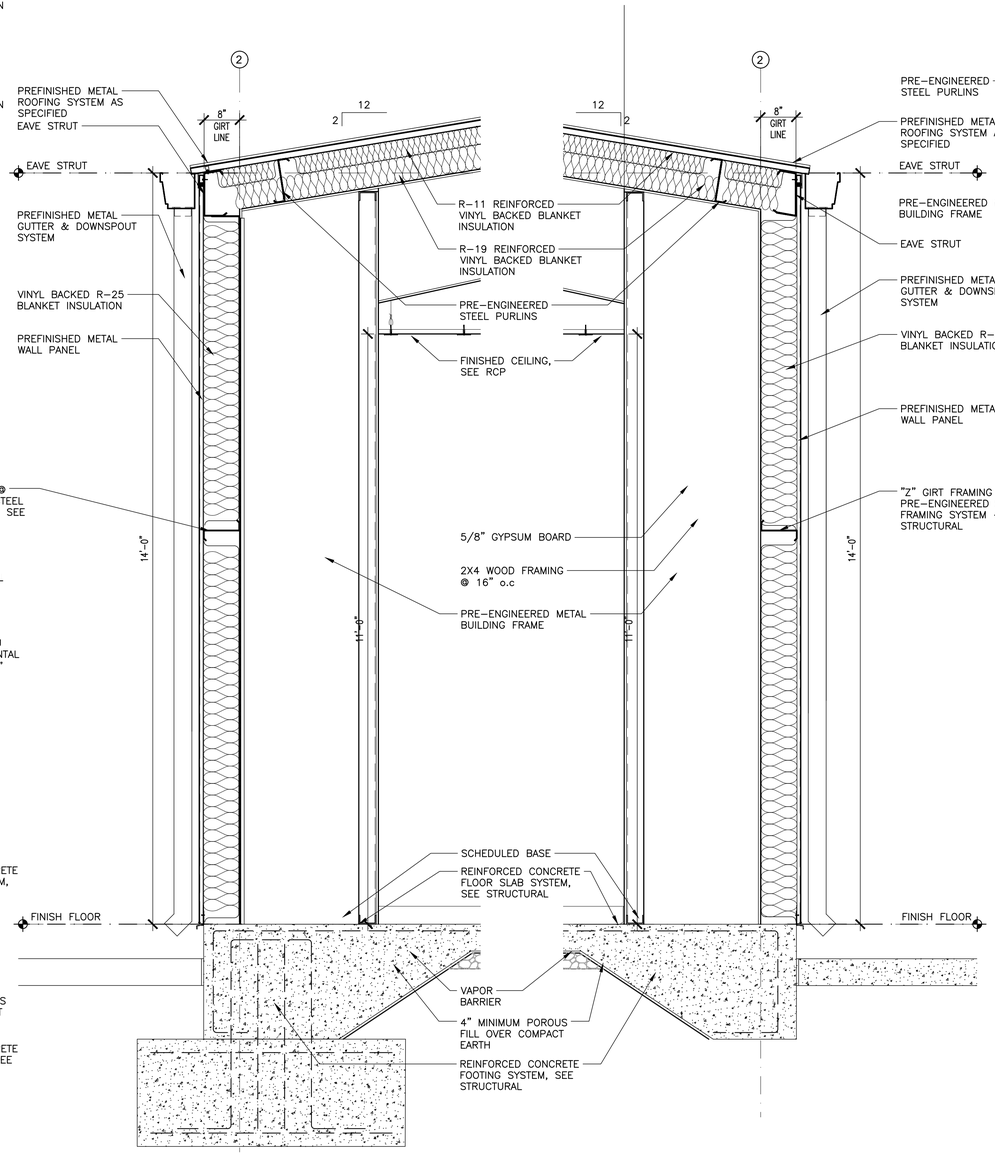

2 WALL SECTION
SCALE: 3/4" = 1'-0"

3 WALL SECTION
SCALE: 3/4" = 1'-0"

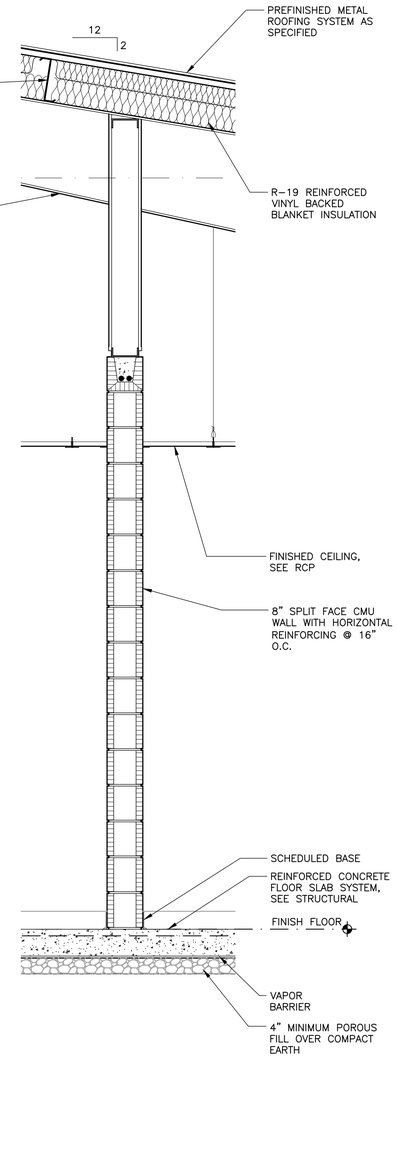

4 WALL SECTION
SCALE: 3/4" = 1'-0"

LATHAN
ARCHITECTS
LATHAN ▪ BRYANT ▪ CALMA

NEW JROTC FACILITY FOR PLEASANT GROVE HIGH SCHOOL

100 SPARTAN DRIVE, PLEASANT GROVE, ALABAMA 35127
JEFFERSON COUNTY BOARD OF EDUCATION

STATE OF ALABAMA
No. 3365
RICK N. LATHAN
REGISTERED ARCHITECT

SHEET TITLE:
WALL SECTIONS

PROJ. MGR.:	R. VERNON
DRAWN:	K. SIMPSON
DATE:	FEBRUARY 1, 2022
REVISIONS	

JOB NO. 21-66

SHEET NO:
A3.3
6 OF 16

0 1" 2"

TOILET ACCESSORY LEGEND	
A	36" S.S. GRAB BAR
B	42" S.S. GRAB BAR
C	COAT HOOK
D	ELECTRIC HAND DRYER
E	FEMININE NAPKIN DISPOSAL
F	SOAP DISPENSER - SURFACE MOUNT
G	TOILET TISSUE DISPENSER
H	FRAMED MIRROR 18" X 30"
J	S.S. ROD W/ CURTAIN
K	SHOWER SEAT
L	MOP SINK

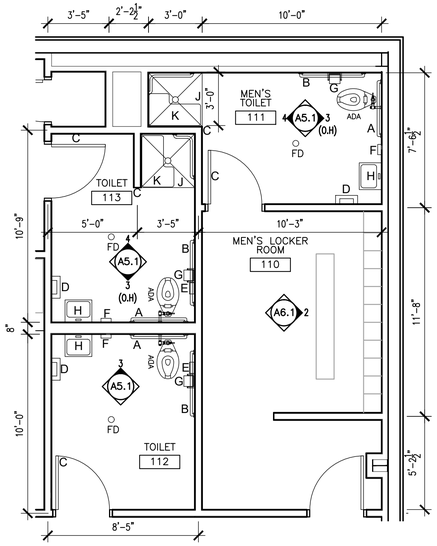

1 ENLARGED TOILET PLAN @ MEN'S LOCKER ROOM 110, MEN'S TOILET 111, TOILET 112, AND TOILET 113

1/4" = 1'-0"

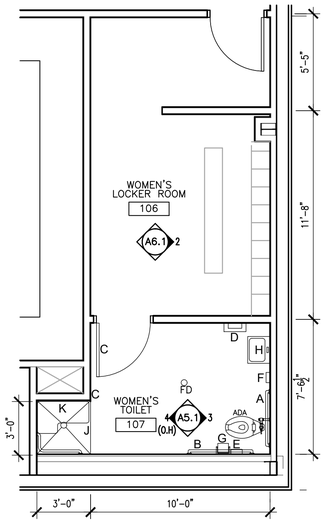

2 ENLARGED TOILET PLAN @ WOMEN'S LOCKER ROOM 106 AND WOMEN'S TOILET 107

1/4" = 1'-0"

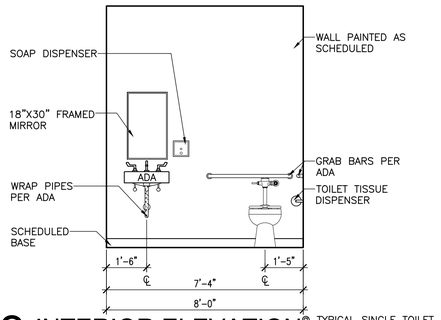

3 INTERIOR ELEVATION @ TYPICAL SINGLE TOILET

3/8" = 1'-0"

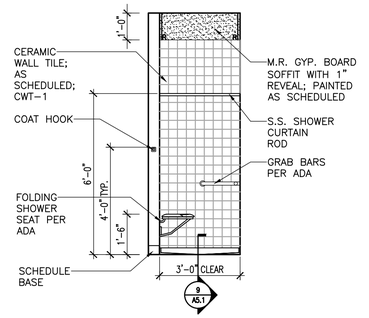

4 INTERIOR ELEVATION @ SHOWER

3/8" = 1'-0"

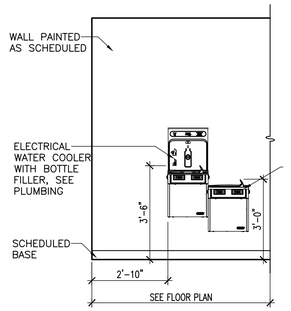

5 INT. ELEV. @ E.W.C

3/8" = 1'-0"

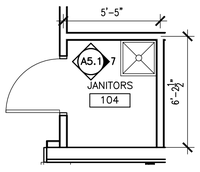

6 ENLARGED PLAN @ JANITOR 104

1/4" = 1'-0"

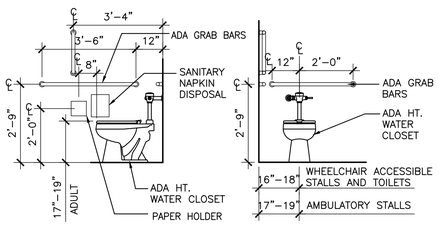

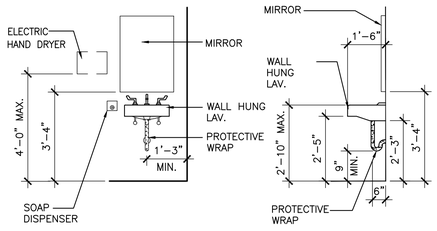

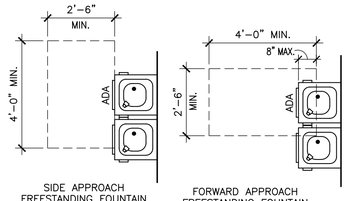

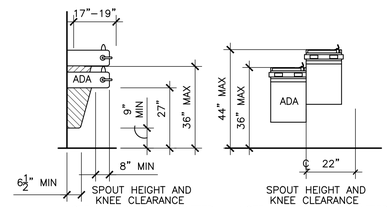

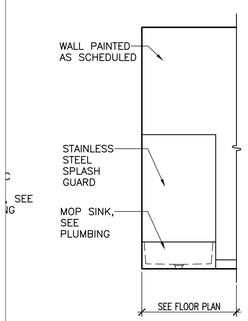

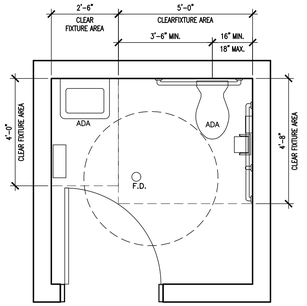

1. DOOR AND 60" TURNAROUND RADIUS MAY OVERLAP.
2. DOOR AND CLEAR FIXTURE AREAS MAY NOT OVERLAP.
3. FIXTURE AREA FOR DIFFERENT FIXTURES MAY NOT OVERLAP.
4. IN A GROUP TOILET WITH CMU PARTITION THE ADA TOILET MUST BE 5'-6" X 5'-6" MIN. OR THEIR MUST BE A 9" TOE SPACE PROVIDED AT THE PARTITIONS.

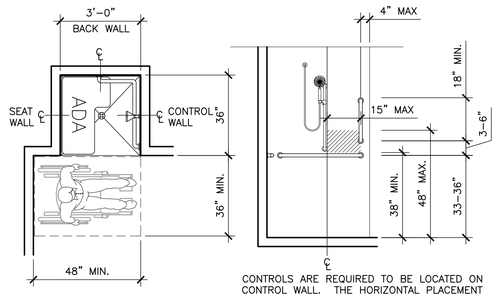

CONTROLS ARE REQUIRED TO BE LOCATED ON CONTROL WALL. THE HORIZONTAL PLACEMENT MUST BE WITHIN 15" OF THE CENTERLINE OF THE SEAT LOCATED ON THE OPPOSING WALL.

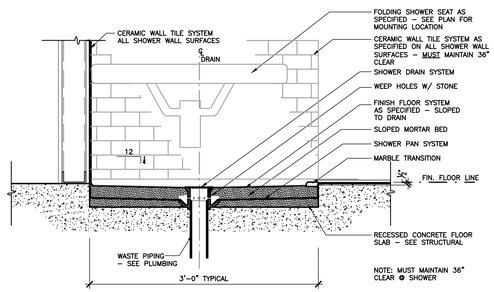

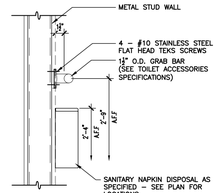

7 INTERIOR ELEVATION @ JANITORS 104

3/8" = 1'-0"

8 TYPICAL ADA DETAILS

3/8" = 1'-0"

9 DETAIL @ SHOWER

1" = 1'-0"

10 DETAIL @ GRAB BAR W/ SANITARY NAPKIN DISPOSAL

1" = 1'-0"

LATHAN ARCHITECTS
LATHAN ▪ BRYANT ▪ CALMA

NEW JROTC FACILITY FOR PLEASANT GROVE HIGH SCHOOL

100 SPARTAN DRIVE, PLEASANT GROVE, ALABAMA 35127
JEFFERSON COUNTY BOARD OF EDUCATION

STATE OF ALABAMA
No. 3365
RICK N. LATHAN
REGISTERED ARCHITECT

SHEET TITLE:
ENLARGED TOILET PLANS, ELEVATIONS, LEGEND, AND DETAILS

PROJ. MGR.: R. VERNON
DRAWN: K.SIMPSON
DATE: FEBRUARY 1, 2022
REVISIONS

JOB NO. 21-66
SHEET NO:
A5.1
7 OF 16

0 1" 2"

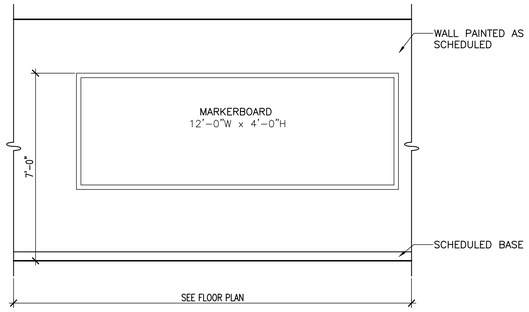

1 INTERIOR ELEVATION @ OPEN DRILL AND FITNESS ROOM 101

3/8" = 1'-0"

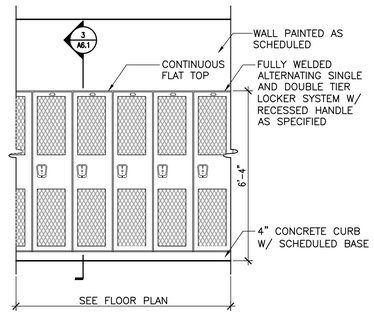

2 INTERIOR ELEVATION @ WOMEN'S LOCKER ROOM 106 AND MEN'S LOCKER ROOM 110

3/8" = 1'-0"

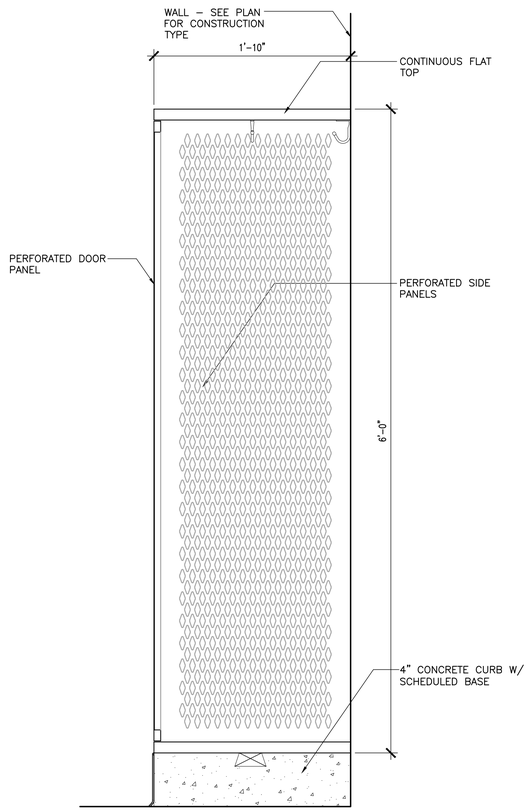

3 DETAIL @ SINGLE TIER LOCKER

1-1/2" = 1'-0"

LATHAN
ARCHITECTS
LATHAN ▪ BRYANT ▪ CALMA

NEW JROTC FACILITY FOR PLEASANT GROVE HIGH SCHOOL

100 SPARTAN DRIVE, PLEASANT GROVE, ALABAMA 35127
JEFFERSON COUNTY BOARD OF EDUCATION

STATE OF ALABAMA
No. 3365
RICK N. LATHAN
REGISTERED ARCHITECT

SHEET TITLE:
INTERIOR ELEVATIONS AND DETAILS

PROJ. MGR.:	R. VERNON
DRAWN:	K.SIMPSON
DATE:	FEBRUARY 1, 2022
REVISIONS	

JOB NO. 21-66

SHEET NO:

A6.1

8 OF 16

0 1" 2"

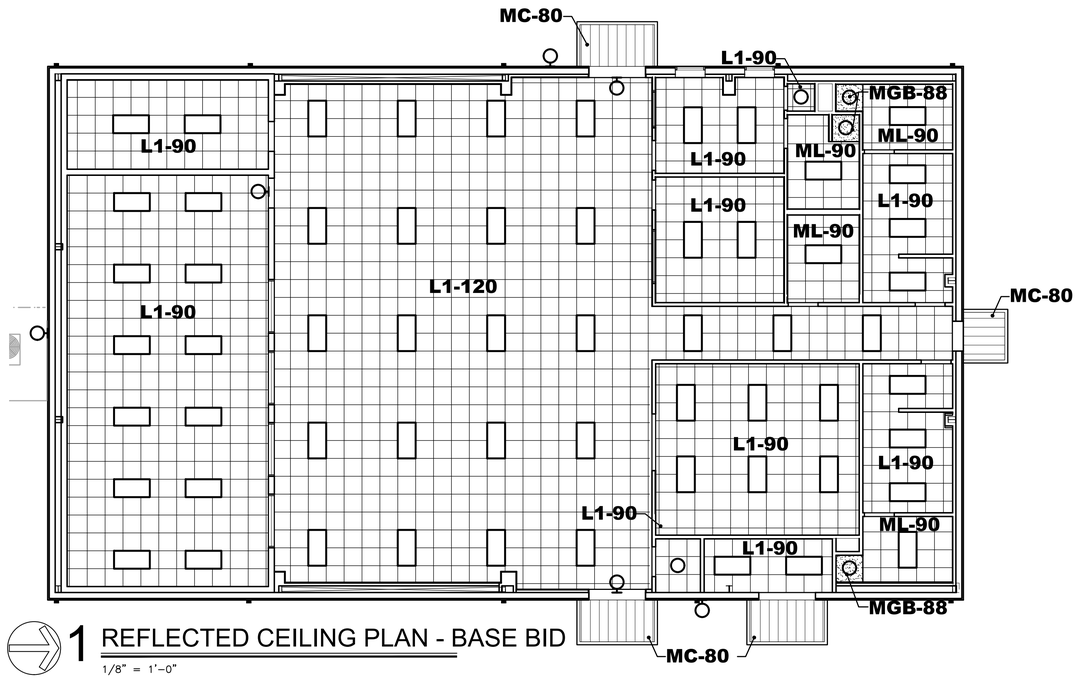

1 REFLECTED CEILING PLAN - BASE BID

1/8" = 1'-0"

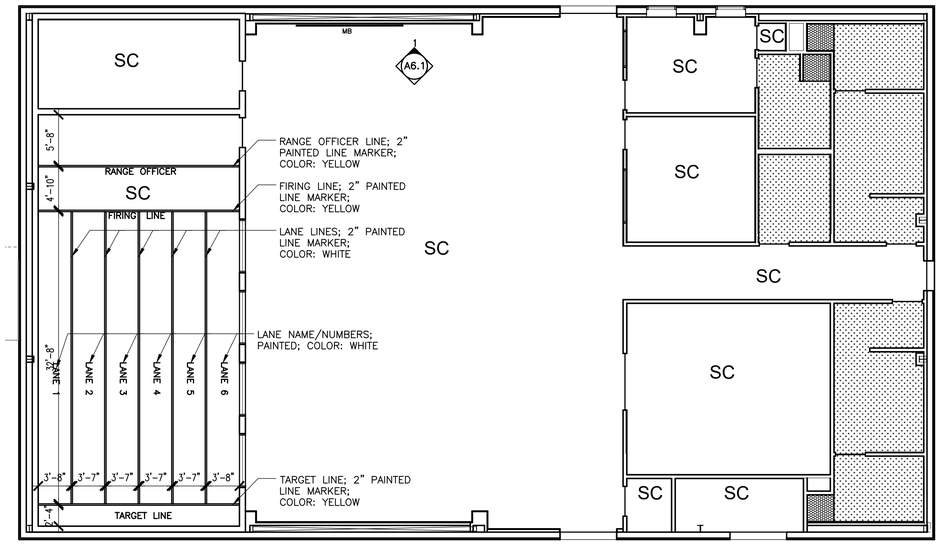

2 FINISHED FLOOR PLAN - BASE BID

1/8" = 1'-0"

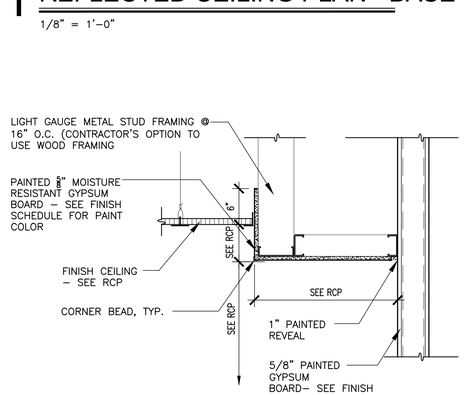

3 DETAIL @ SHOWER

1/8" = 1'-0"

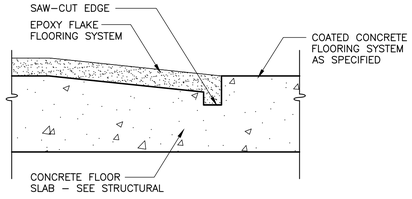

4 EPOXY TO CONCRETE

1/8" = 1'-0"

CEILING LEGEND

FIXTURE TYPES - SEE ELECTRICAL

CEILING TYPE	CEILING HEIGHTS
L1 - 2' X 2' ACOUSTIC LAY-IN TILE, SEE SPECS.	80 = 8'-0" AFF
ML - 2 x 2 MOISTURE RESISTANT LAY-IN, SEE SPECS	88 = 8'-8" AFF
MGB- MOISTURE RESISTANT GYPSUM BOARD	90 = 9'-0" AFF
MC - METAL CANOPY	120 = 12'-0" AFF
REFER TO FINISH SYMBOLS ON PLAN FOR MATERIALS AND CEILING HEIGHTS	

CEILING TYPE — L1–90 — CEILING HEIGHT

CEILING NOTES

1. AFF = ABOVE FINISH FLOOR
2. ALL CEILING HEIGHTS ARE FROM ADJACENT FINISHED FLOOR.
3. CEILING HEIGHTS INDICATED ARE MINIMUM HEIGHTS. COORDINATE W/ PLUMBING, MECHANICAL, AND ELECTRICAL TO INSTALL CEILINGS AS HIGH AS POSSIBLE.
4. ALL CEILING GRIDS ARE TO BE CENTERED IN ROOM UNLESS SHOWN OR NOTED OTHERWISE.
5. COORDINATE W/ PLUMBING, MECHANICAL, AND ELECTRICAL DRAWINGS AND PROVIDE FRAMING AS REQUIRED TO ACCOMMODATE MECHANICAL AND PLUMBING SYSTEMS.

LIGHTING/ELECTRICAL NOTES

COORDINATE LIGHTING LAYOUTS WITH ELECTRICAL DRAWINGS. CONTACT ARCHITECT WITH ANY DISCREPANCIES.

FINISH SCHEDULE

NO.	ROOM NAME	FLOOR	BASE	MILLWORK FACE	MILLWORK TOP	WALLS (PROJECT NORTH) NORTH	SOUTH	EAST	WEST	DOOR FRAME	CEILING/SOFFIT PAINT	NOTES
101	OPEN DRILL & FITNESS ROOM	SC	-	-	-	PNT-1	PNT-1	PNT-1	PNT-1	PNT-2		
102	ARMS ROOM	SC	-	-	-	PNT-1	PNT-1	PNT-1	PNT-1	PNT-2		
103	SHOOTING RANGE	SC/PNT	-	-	-	PNT-1	PNT-1	PNT-1	PNT-1	PNT-2		SEE 2/A7.1 FOR LINE PAINT COLOR
104	JANITORS	SC	-	-	-	PNT-1	PNT-1	PNT-1	PNT-1	PNT-2		
105	STORAGE	SC	-	-	-	PNT-1	PNT-1	PNT-1	PNT-1	PNT-2		
106	WOMEN'S LOCKER ROOM	ERF-1	ERB-1	-	-	PNT-1	PNT-1	PNT-1	PNT-1	PNT-2		
107	WOMEN'S TOILET	ERF-1/PFT-1	ERB-1	-	-	PNT-1	PNT-1	PNT-1	PNT-1	PNT-2	PNT-3	
108	MECHANICAL & ELECTRICAL	SC	-	-	-	PNT-1	PNT-1	PNT-1	PNT-1	PNT-2		
109	CORRIDOR	SC	-	-	-	PNT-1	PNT-1	PNT-1	PNT-1	PNT-2		
110	MEN'S LOCKER ROOM	ERF-1	ERB-1	-	-	PNT-1	PNT-1	PNT-1	PNT-1	PNT-2		
111	MEN'S TOILET	ERF-1/PFT-1	ERB-1	-	-	PNT-1	PNT-1	PNT-1	PNT-1	PNT-2	PNT-3	
112	TOILET	ERF-1	ERB-1	-	-	PNT-1	PNT-1	PNT-1	PNT-1	PNT-2		
113	TOILET	ERF-1PFT-1	ERB-1	-	-	PNT-1	PNT-1	PNT-1	PNT-1	PNT-2	PNT-3	
114	INSTRUCTOR'S OFFICE	SC	-	-	-	PNT-1	PNT-1	PNT-1	PNT-1	PNT-2		
114A	CLOSET	SC	-	-	-	PNT-1	PNT-1	PNT-1	PNT-1	PNT-2		
115	CADET STAFF BATTALION HQ	SC	-	-	-	PNT-1	PNT-1	PNT-1	PNT-1	PNT-2		
ALTNERNATE												
116	INSTRUCTION	SC	-	-	-	PNT-1	PNT-1	PNT-1	PNT-1	PNT-2		
117	INSTRUCTION	SC	-	-	-	PNT-1	PNT-1	PNT-1	PNT-1	PNT-2		

BASE

ITEM	MANUFACTURER	ITEM NUMBER/NAME
ERB-1	TORGINOL	MATCH TO ERF-1

PORCELAIN FLOOR TILE

ITEM	MANUFACTURER	ITEM NUMBER/NAME
PFT-1	DALTILE	COLLECTION: KEYSTONE COLOR: URBAN PUTTY D161 SIZE: 2X2 MOSAIC GROUT:

SEALED CONCRETE

ITEM	MANUFACTURER	ITEM NUMBER/NAME
SC	SEE SPEC	SEE SPEC

EPOXY

ITEM	MANUFACTURER	ITEM NUMBER/NAME
ERF-1	TORGINOL	COLOR FLAKES BLEND ID:CUSTOM COLOR BLEND:4 COLORS MAX SIZE:1/4"

PAINT

ITEM	MANUFACTURER	ITEM NUMBER/NAME	TYPE/LOCATION
PNT-1	SHERWIN WILLIAMS	COLOR: ACCESSIBLE BEIGE SW7036	GENERAL WALLS
PNT-2	SHERWIN WILLIAMS	COLOR: REPOSE GREY SW7015	GENERAL TRIM
PNT-3	SHERWIN WILLIAMS	COLOR: SHOJI WHITE SW7042	SHOWER SOFFITS
PNT-4	SHERWIN WILLIAMS	COLOR:	SHOOTING RANGE LINES
PNT-5	SHERWIN WILLIAMS	COLOR:	SHOOTING RANGE LINES

CERAMIC WALL TILE

ITEM	MANUFACTURER	ITEM NUMBER/NAME
CWT-1	DALTILE	COLLECTION: NATURAL HUES COLOR: MUSHROOM QH16 SIZE: 4 X 4 GROUT:

FINISH NOTES

ALL WALLS TO BE PAINTED PNT -1 UNLESS NOTED OTHERWISE.

ALL WALLS LOCATED IN WET AREAS SHALL HAVE EPOXY BASED PAINT

AT WET AREAS WHERE RUBBER BASE IS SCHEDULED TO BE INSTALLED, PROVIDE WATERPROOFING WHERE BASE MEETS FLOOR AS REQUIRED

FINISH PATTERN LEGEND

SC — SC SEALED CONCRETE

PFT-1 PORCELAIN FLOOR TILE

ERF-1 EPOXY RESIN FLOORING

LATHAN ARCHITECTS
LATHAN ▪ BRYANT ▪ CALMA

NEW JROTC FACILITY FOR PLEASANT GROVE HIGH SCHOOL

100 SPARTAN DRIVE, PLEASANT GROVE, ALABAMA 35127
JEFFERSON COUNTY BOARD OF EDUCATION

STATE OF ALABAMA
No. 3365
RICK N. LATHAN
REGISTERED ARCHITECT

SHEET TITLE:
REFLECTED CEILING PLAN, FINISH FLOOR PLAN, LEGENDS, AND DETAILS

PROJ. MGR.: R. VERNON
DRAWN: K.SIMPSON
DATE: FEBRUARY 1, 2022
REVISIONS

JOB NO. 21-66

SHEET NO:
A7.1

0 1" 2"

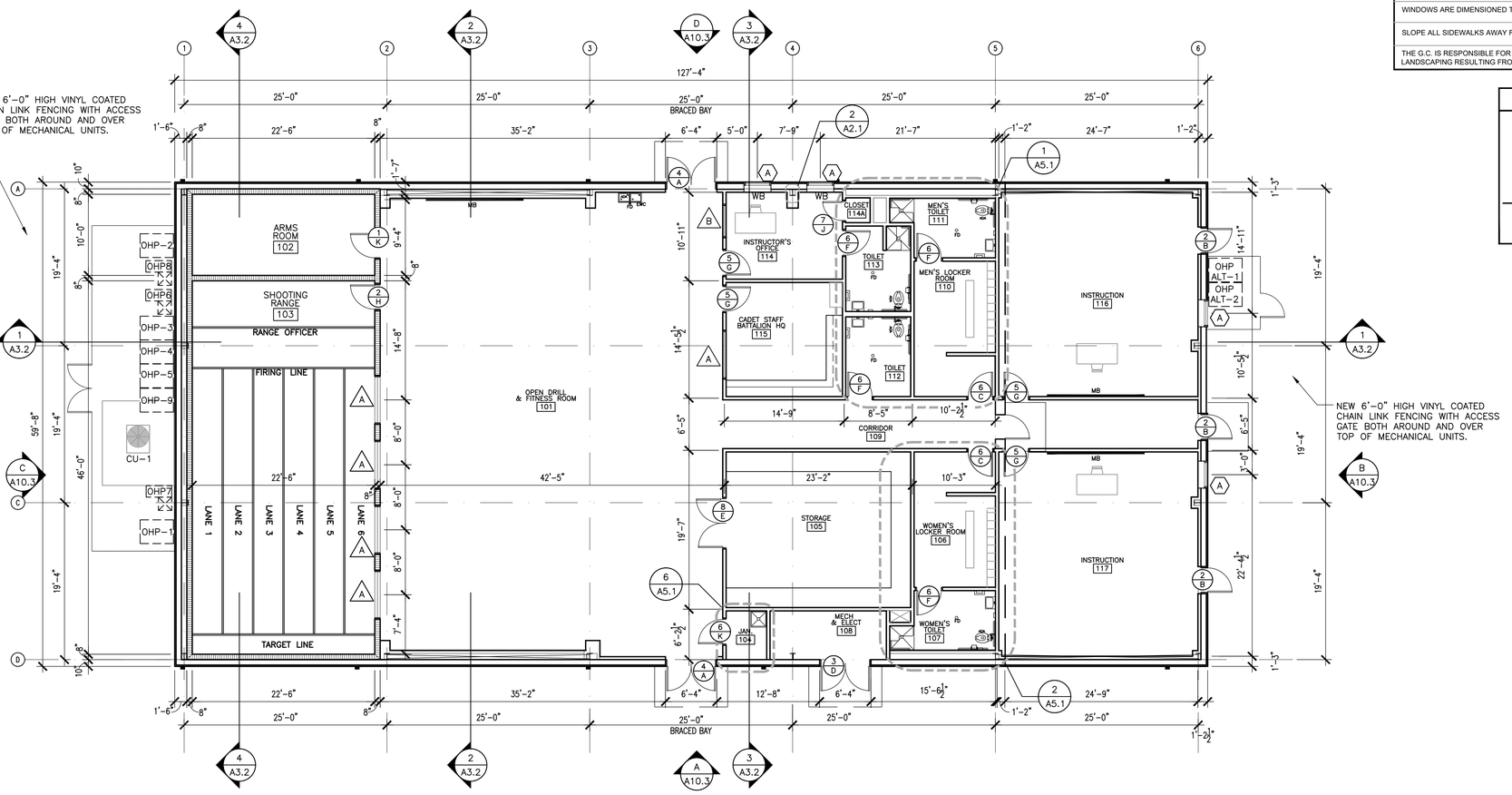

1 FLOOR PLAN - ALTERNATE

1/8" = 1'-0"

WALL TYPE LEGEND

A		PRE-ENGINEERED METAL BUILDING FRAME WITH METAL PANELS AT EXTERIOR AND R-25 VINYL FACED INSULATION SYSTEM AS SPECIFIED INSTALL ⅜" PLYWOOD UP TO 8'-0"
B		8" CMU WALL TO 14'-0" AFF.
C		NEW 3⅝" METAL STUD WALL WITH ⅝" HIGH IMPACT GYPSUM BOARD EACH SIDE AND SOUND ATTENUATION BATT INSULATION.

GENERAL NOTES

EXTEND & KEY RATED WALLS TO BOTTOM OF ROOF DECK - SEE LIFE SAFETY DRAWINGS FOR RATED WALL LOCATIONS.	SLOPE FINISH FLOOR TO FLOOR DRAINS
COORDINATE W/ ELECTRICAL & MECHANICAL AND PROVIDE CONCRETE EQUIPMENT PAD AS REQUIRED	PAINT ALL EXPOSED CMU SURFACES AND PEMB FRAME
WINDOWS ARE DIMENSIONED TO THE CENTER LINE	SEE ELEVATIONS AND ROOF PLAN FOR DOWNSPOUT LOCATIONS
SLOPE ALL SIDEWALKS AWAY FROM THE BUILDING	SEE CIVIL DRAWINGS FOR CONTINUATION OF SIDEWALKS
THE G.C. IS RESPONSIBLE FOR REPAIRING ANY DAMAGES TO EXISTING LANDSCAPING RESULTING FROM NEW WORK.	ALL PLAN DIMENSIONS ARE TO FACE OF CMU AND TO CENTER LINE OF STUDS

DOOR PLACEMENT LEGEND

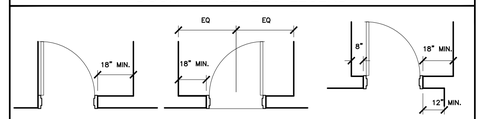

SYMBOLS LEGEND

A200	ROOM NUMBER	TC-A	DOOR TYPE / DOOR RATING / HARDWARE SYMBOL
+	INTERIOR FLOOR ELEVATION	A / A1.1	ELEV. MARK / SHEET NUMBER
F.D.	FLOOR DRAIN	1 / A1.1	SECT. MARK / SHEET NUMBER
EWC	ELECTRIC WATER COOLER	5 / A5.1	ELEV. MARK / SHEET NUMBER / INT. ELEVATION
1	EXTERIOR WINDOW		
	NEW DOOR AND SWING		
WB	WINDOW BLINDS		

LATHAN ARCHITECTS
LATHAN ▪ BRYANT ▪ CALMA

NEW JROTC FACILITY FOR PLEASANT GROVE HIGH SCHOOL

100 SPARTAN DRIVE, PLEASANT GROVE, ALABAMA 35127
JEFFERSON COUNTY BOARD OF EDUCATION

STATE OF ALABAMA
No. 3365
RICK N. LATHAN
REGISTERED ARCHITECT

SHEET TITLE:
FLOOR PLAN AND LEGENDS - ALTERNATE

PROJ. MGR.:	R. VERNON
DRAWN:	K.SIMPSON
DATE:	FEBRUARY 1, 2022
REVISIONS	

JOB NO. 21-66

SHEET NO:

A10.1

10 OF 16

0 1" 2"

ROOF GENERAL NOTES

1. DOWNSPOUTS SHOWN ON THIS SHEET ARE SHOWN AS REFERENCE ONLY. CONTRACTOR TO SEE ELEVATIONS FOR DOWNSPOUT LOCATIONS AND TO AVOID ANY CONFLICT WITH DOORS, WINDOWS, AND HEAVY TRAFFIC AREAS.
2. COORDINATE WITH PLUMBING, MECHANICAL AND ELECTRICAL FOR ROOF PENETRATIONS. FLASH ALL PENETRATIONS. ROOFING CONTRACTOR SHALL MAINTAIN SINGLE SOURCE RESPONSIBILITY FOR WEATHER TIGHTNESS OF ROOF PENETRATIONS AS PART OF ROOFING SYSTEM ENVELOPE

ROOF LEGEND

DETAIL NUMBER / SHEET NUMBER — ROOF DETAIL MARKER	
DIRECTION OF DOWNWARD SLOPE — 1/4:12 — RISE:RUN — ROOF SLOPE MARKER	
DS/SB	DOWNSPOUT W/SPLASHBLOCK
DS/B	DOWNSPOUT WITH BOOT
GEJ	GUTTER EXPANSION JOINT
PV	PLUMBING VENT
EF	EXHAUST FAN
EV	EXHAUST VENT
CA	COMBUSTION AIR DUCT

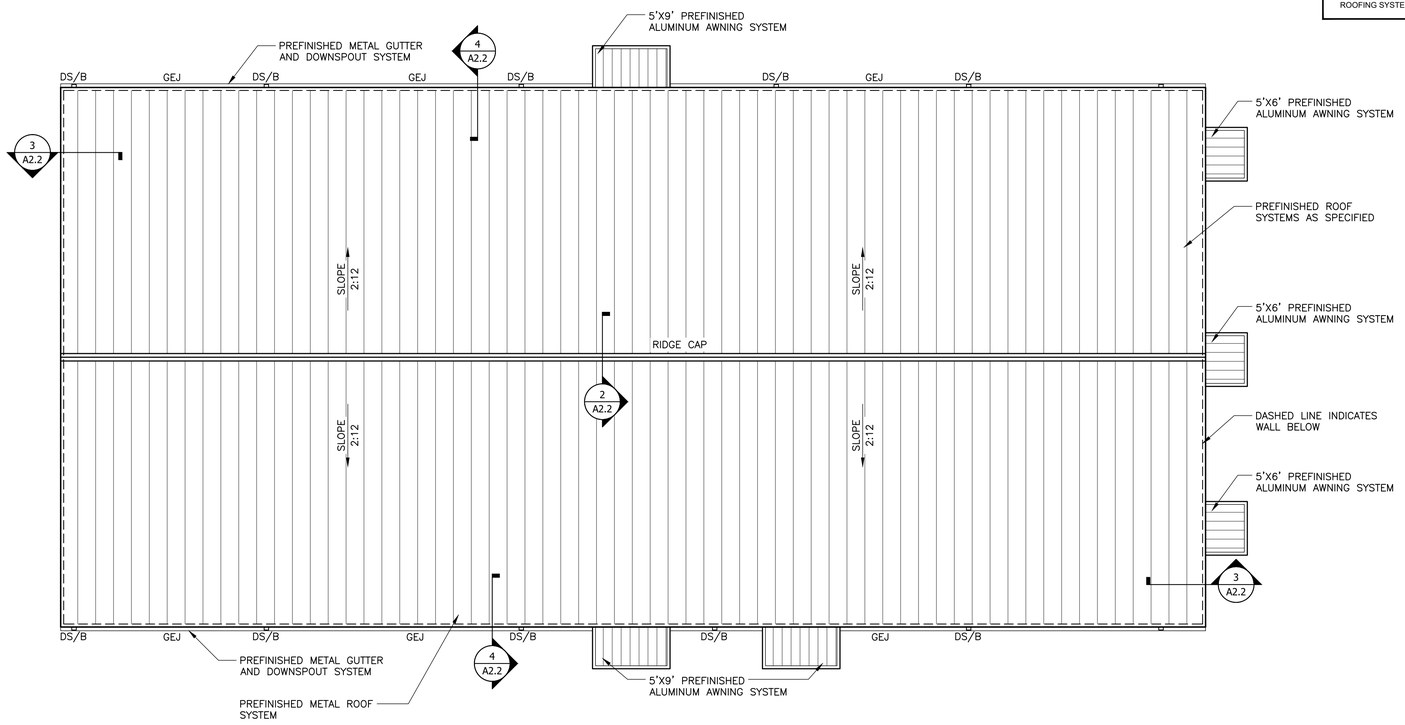

1 ROOF PLAN - ALTERNATE

1/8" = 1'-0"

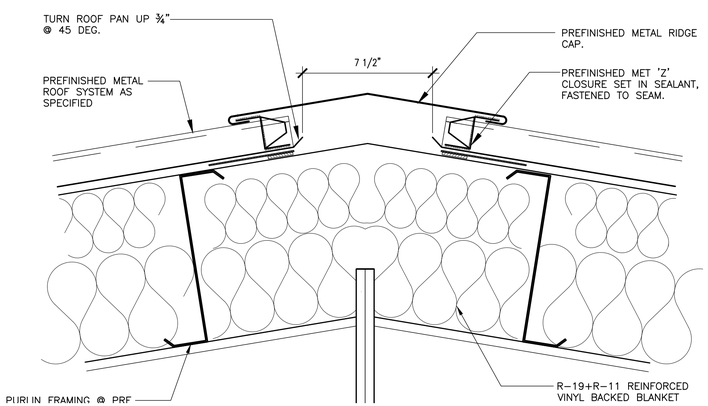

2 DETAIL @ TYPICAL RIDGE

3" = 1'-0"

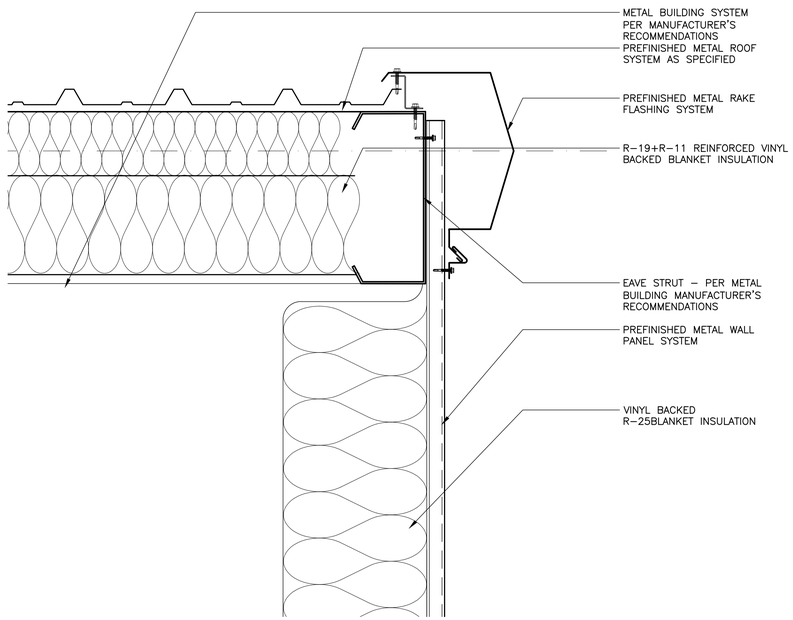

3 DETAIL @ TYPICAL RAKE

3" = 1'-0"

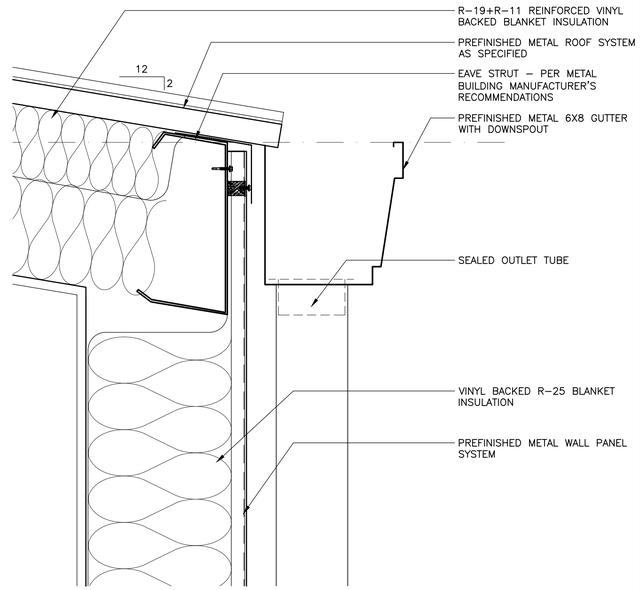

4 DETAIL @ TYPICAL EAVE

3" = 1'-0"

LATHAN ARCHITECTS
LATHAN ▪ BRYANT ▪ CALMA

NEW JROTC FACILITY FOR PLEASANT GROVE HIGH SCHOOL

100 SPARTAN DRIVE, PLEASANT GROVE, ALABAMA 35127
JEFFERSON COUNTY BOARD OF EDUCATION

STATE OF ALABAMA
No. 3365
RICK N. LATHAN
REGISTERED ARCHITECT

SHEET TITLE:
ROOF PLAN, LEGENDS, AND DETAILS - ALTERNATE

PROJ. MGR.:	R. VERNON
DRAWN:	K.SIMPSON
DATE:	FEBRUARY 1, 2022
REVISIONS	

JOB NO. 21-66

SHEET NO:

A10.2

11 OF 16

0 1" 2"

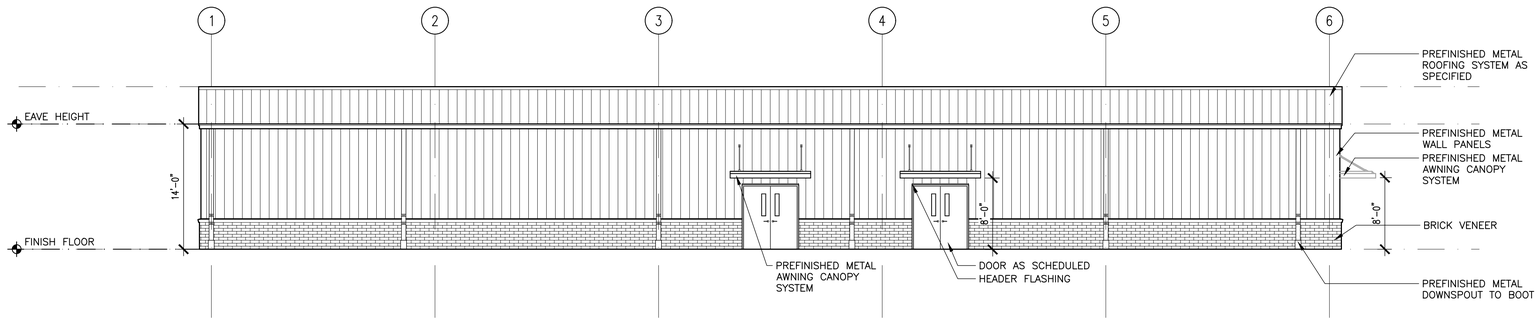

A BUILDING ELEVATION - ALTERNATE

1/8" = 1'-0"

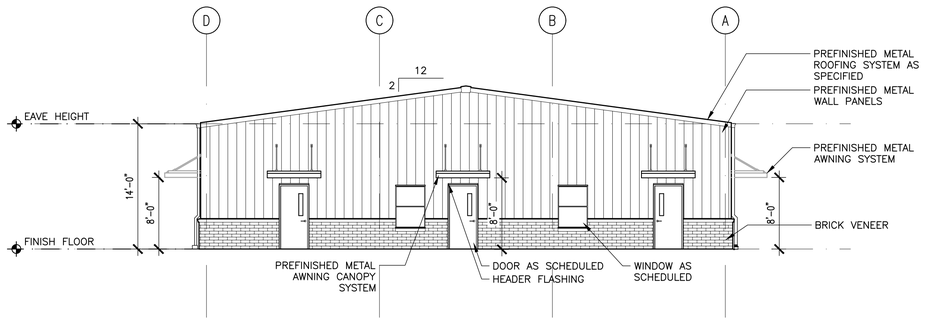

B BUILDING ELEVATION - ALTNERATE

1/8" = 1'-0"

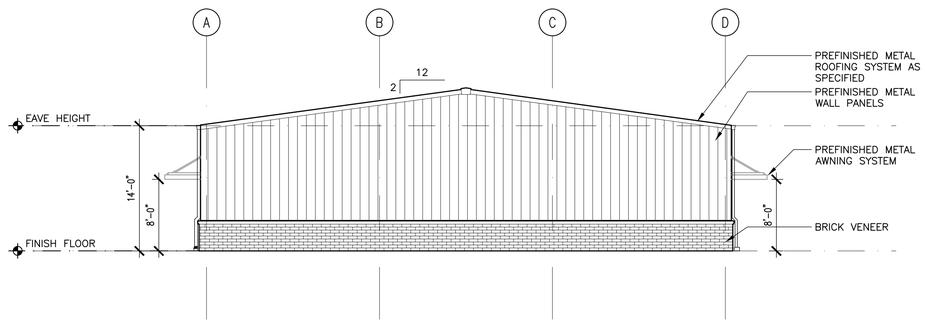

C BUILDING ELEVATION - ALTERNATE

1/8" = 1'-0"

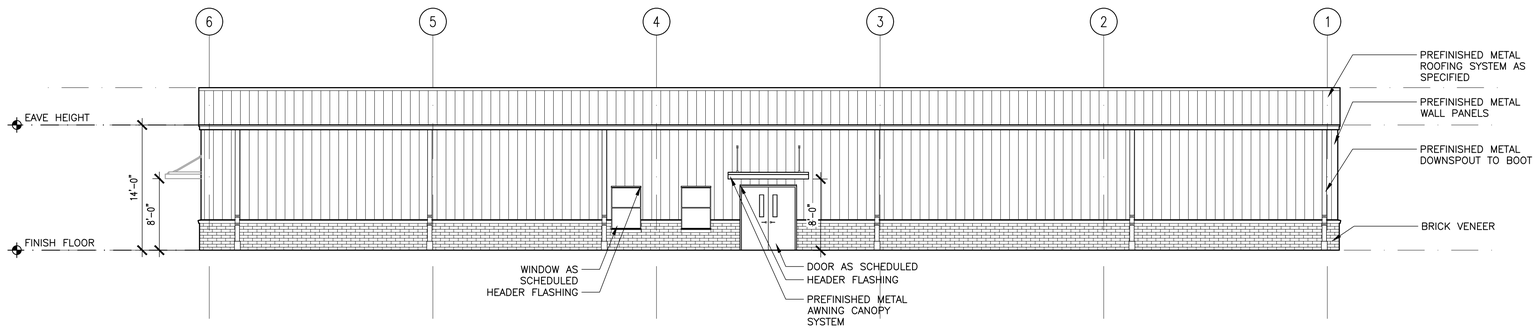

D BUILDING ELEVATION - ALTERNATE

1/8" = 1'-0"

LATHAN
ARCHITECTS
LATHAN ▪ BRYANT ▪ CALMA

NEW JROTC FACILITY FOR PLEASANT GROVE HIGH SCHOOL

100 SPARTAN DRIVE, PLEASANT GROVE, ALABAMA 35127
JEFFERSON COUNTY BOARD OF EDUCATION

STATE OF ALABAMA
No. 3365
RICK N. LATHAN
REGISTERED ARCHITECT

SHEET TITLE:
BUILDING ELEVATIONS - ALTERNATE

PROJ. MGR.:	R. VERNON
DRAWN:	K.SIMPSON
DATE:	FEBRUARY 1, 2022
REVISIONS	

JOB NO. 21-66

SHEET NO:

A10.3

12 OF 16

0 1" 2"

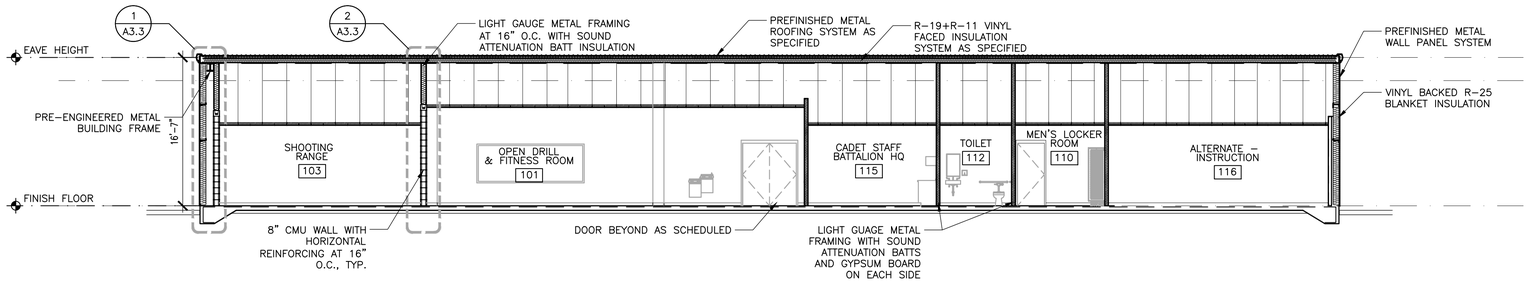

1 BUILDING SECTION - ALTERNATE

1/8" = 1'-0"

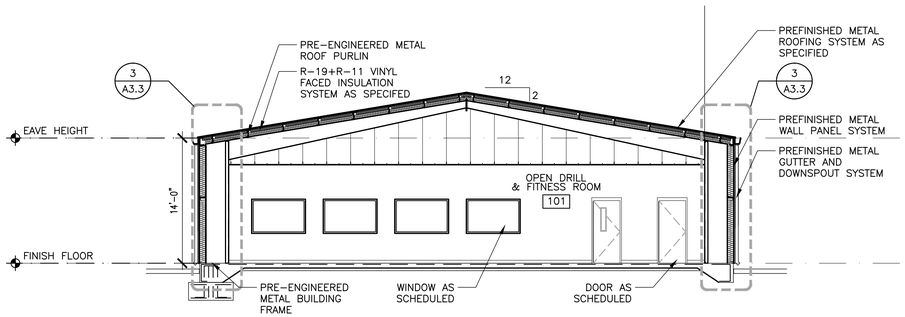

2 BUILDING SECTION - ALTERNATE

1/8" = 1'-0"

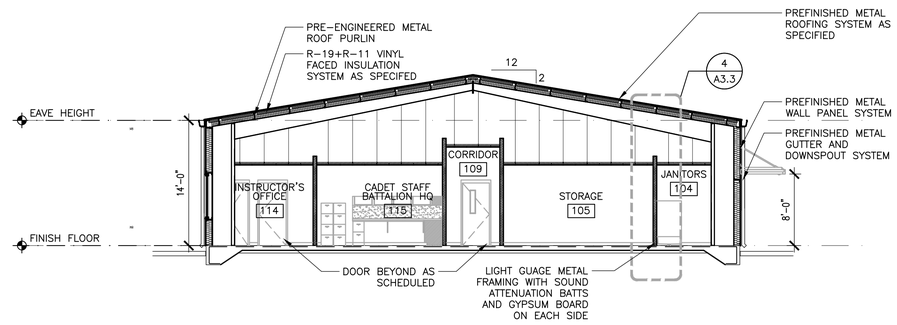

3 BUILDING SECTION - ALTERNATE

1/8" = 1'-0"

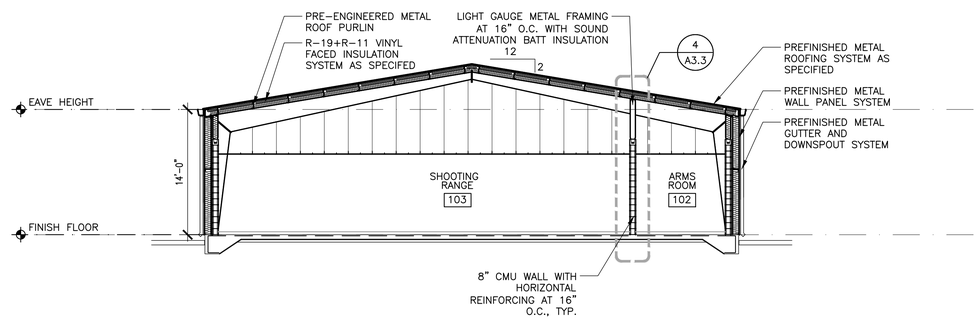

4 BUILDING SECTION - ALTERNATE

1/8" = 1'-0"

LATHAN
ARCHITECTS
LATHAN ▪ BRYANT ▪ CALMA

NEW JROTC FACILITY FOR
PLEASANT GROVE HIGH SCHOOL
100 SPARTAN DRIVE, PLEASANT GROVE, ALABAMA 35127
JEFFERSON COUNTY BOARD OF EDUCATION

STATE OF ALABAMA
No. 3365
RICK N. LATHAN
REGISTERED ARCHITECT

SHEET TITLE:
BUILDING SECTIONS - ALTERNATE

PROJ. MGR.:	R. VERNON
DRAWN:	K.SIMPSON
DATE:	FEBRUARY 1, 2022
REVISIONS	

JOB NO. 21-66

SHEET NO:
A10.4
13 OF 16

0 1" 2"

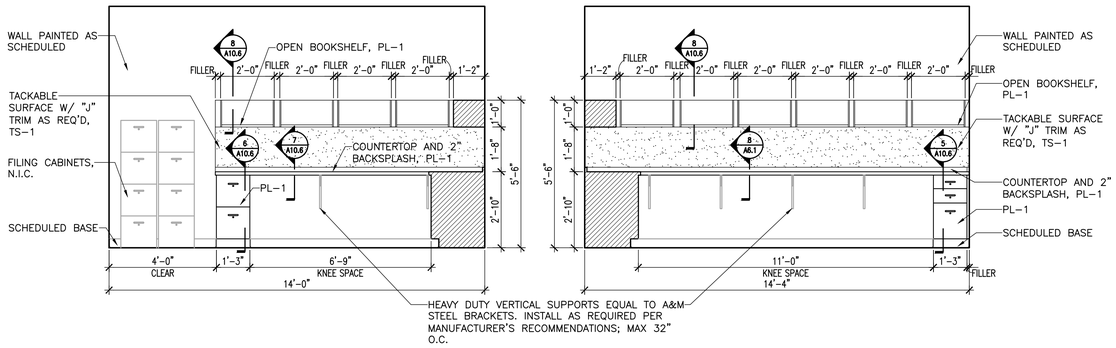

1 INTERIOR ELEVATION @ CADET STAFF BATTALION HQ 115

3/8" = 1'-0"

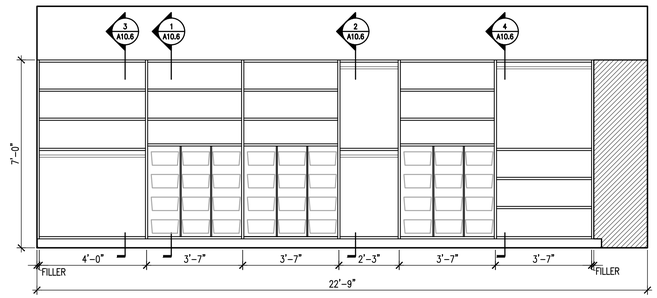

2 INTERIOR ELEVATION @ CADET STAFF BATTALION HQ 115

3/8" = 1'-0"

3 INTERIOR ELEVATION @ STORAGE 105

3/8" = 1'-0"

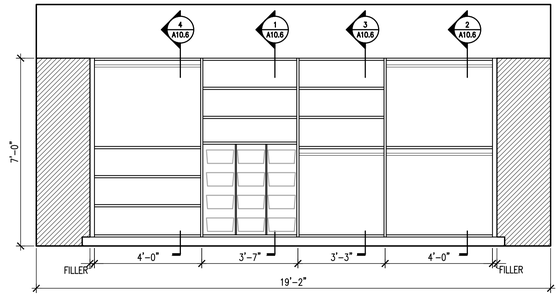

4 INTERIOR ELEVATION @ STORAGE 105

3/8" = 1'-0"

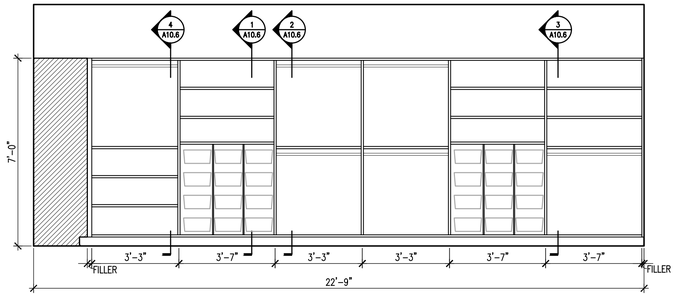

5 INTERIOR ELEVATION @ STORAGE 105

3/8" = 1'-0"

LATHAN
ARCHITECTS
LATHAN ▪ BRYANT ▪ CALMA

NEW JROTC FACILITY FOR PLEASANT GROVE HIGH SCHOOL

100 SPARTAN DRIVE, PLEASANT GROVE, ALABAMA 35127
JEFFERSON COUNTY BOARD OF EDUCATION

STATE OF ALABAMA
No. 3365
RICK N. LATHAN
REGISTERED ARCHITECT

SHEET TITLE:
INTERIOR ELEVATIONS - ALTERNATE

PROJ. MGR.: R. VERNON
DRAWN: K.SIMPSON
DATE: FEBRUARY 1, 2022
REVISIONS

JOB NO. 21-66
SHEET NO:
A10.5
14 OF 16

0 1" 2"

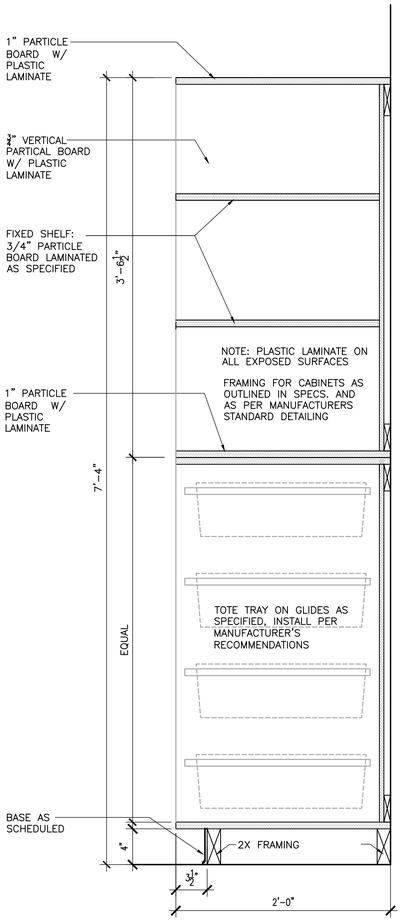

1 DETAIL @ FIXED SHELVING WITH TOTE STORAGE

1-1/2" = 1'-0"

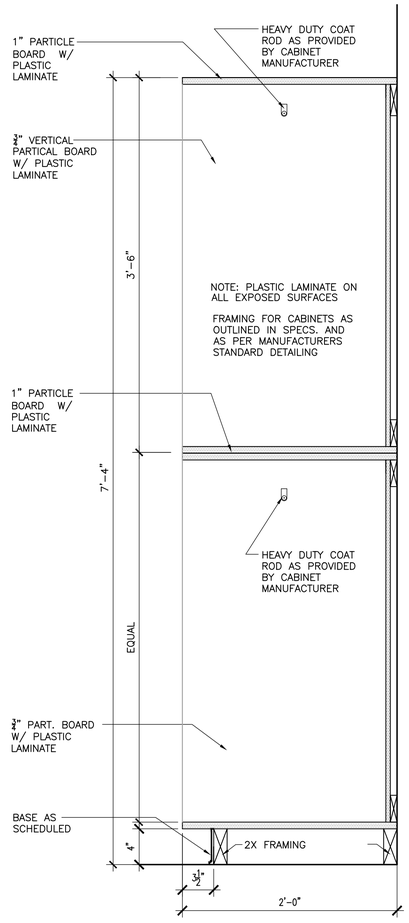

2 DETAIL @ DOUBLE HANGING STORAGE

1-1/2" = 1'-0"

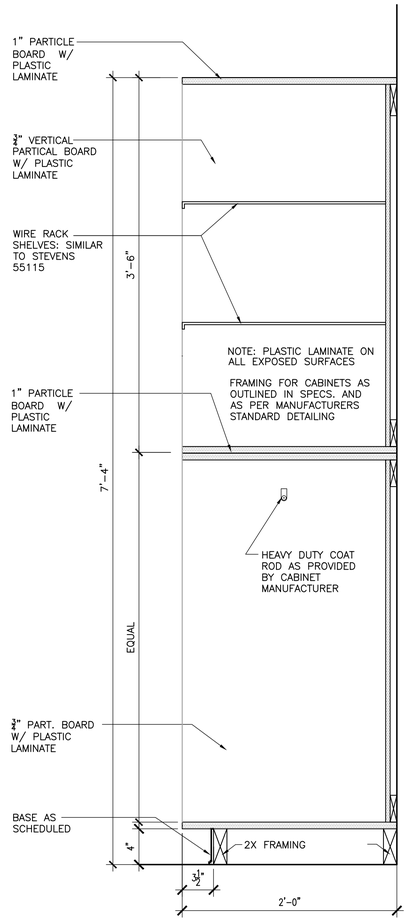

3 DETAIL @ HANGING STORAGE/FIXED SHELF/WIRE SHELVING

1-1/2" = 1'-0"

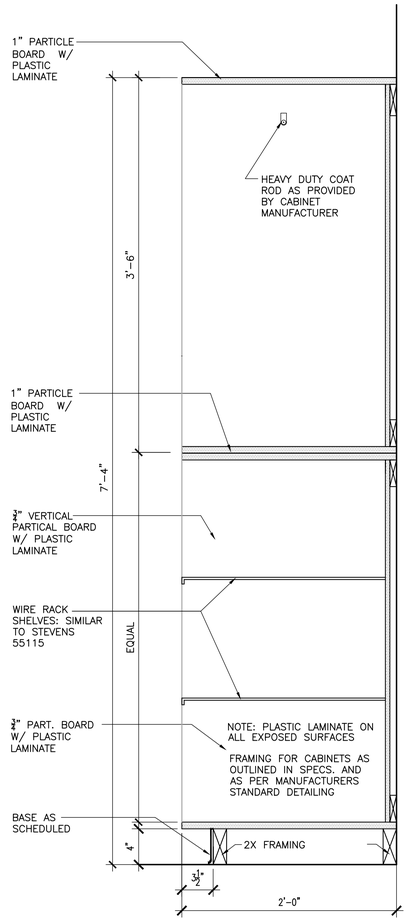

4 DETAIL @ HANGING STORAGE/FIXED SHELF/WIRE SHELVING

1-1/2" = 1'-0"

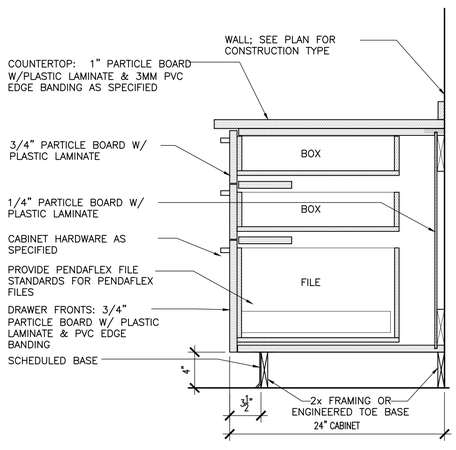

5 DETAIL @ BOX/BOX/FILE

1-1/2" = 1'-0"

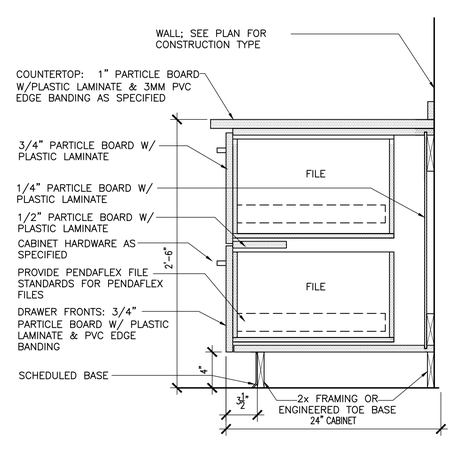

6 DETAIL @ FILE/FILE

1-1/2" = 1'-0"

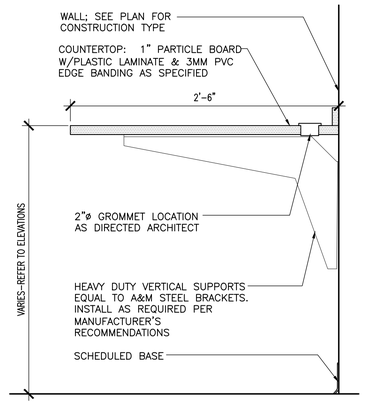

7 DETAIL @ COUNTER

1-1/2" = 1'-0"

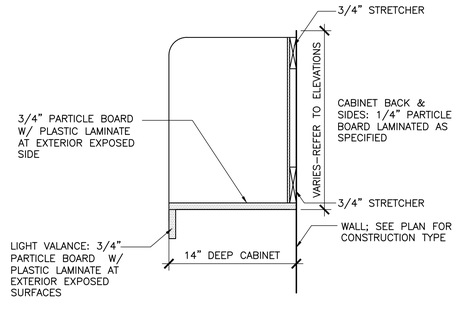

8 DETAIL @ OPEN BOOKSHELF

1-1/2" = 1'-0"

LATHAN ARCHITECTS
LATHAN ▪ BRYANT ▪ CALMA

NEW JROTC FACILITY FOR PLEASANT GROVE HIGH SCHOOL

100 SPARTAN DRIVE, PLEASANT GROVE, ALABAMA 35127
JEFFERSON COUNTY BOARD OF EDUCATION

STATE OF ALABAMA
No. 3365
RICK N. LATHAN
REGISTERED ARCHITECT

SHEET TITLE:
DETAILS - ALTERNATE

PROJ. MGR.: R. VERNON
DRAWN: K.SIMPSON
DATE: FEBRUARY 1, 2022
REVISIONS

JOB NO. 21-66
SHEET NO:
A10.6
15 OF 16

0 1" 2"

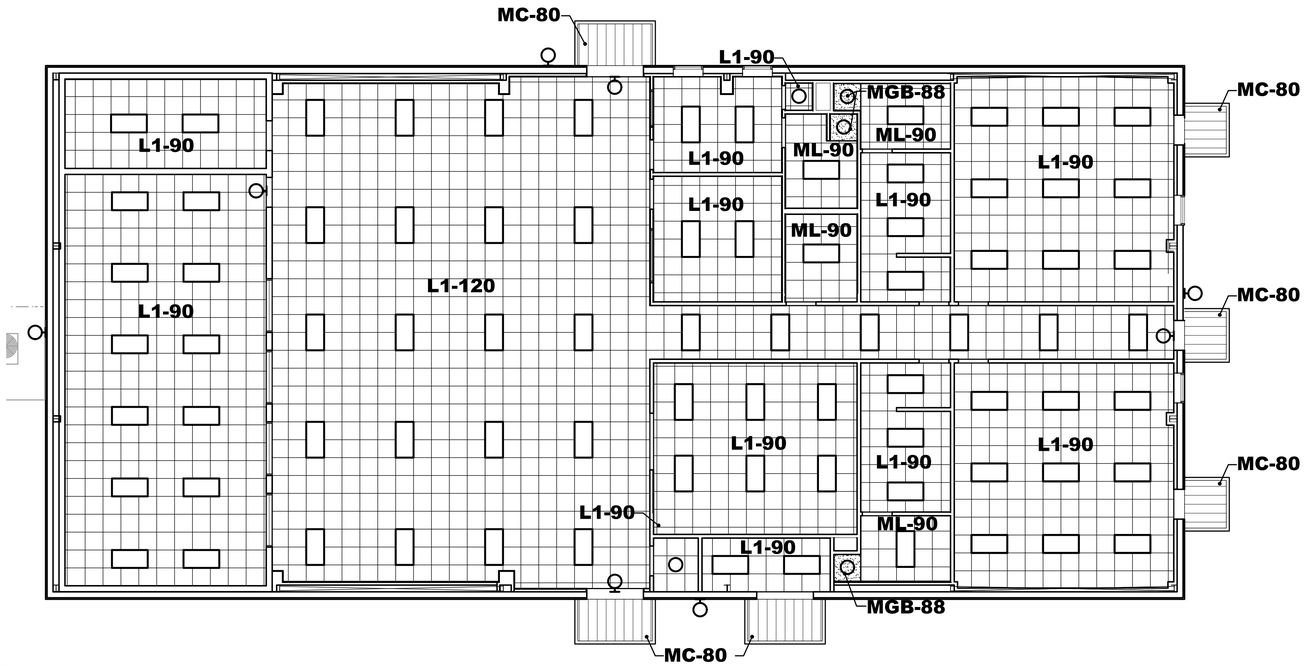

1 REFLECTED CEILING PLAN - ALTERNATE

1/8" = 1'-0"

CEILING LEGEND

FIXTURE TYPES - SEE ELECTRICAL

CEILING TYPE	CEILING HEIGHTS
L1 - 2' X 2' ACOUSTIC LAY-IN TILE, SEE SPECS.	80 = 8'- 0" AFF
ML - 2 x 2 MOISTURE RESISTANT LAY-IN, SEE SPECS	88 = 8'- 8" AFF
MGB- MOISTURE RESISTANT GYPSUM BOARD	90 = 9'-0" AFF
MC - METAL CANOPY	120 = 12'-0" AFF
REFER TO FINISH SYMBOLS ON PLAN FOR MATERIALS AND CEILING HEIGHTS	
CEILING TYPE — L1 — 90 / CEILING HEIGHT	

CEILING NOTES

1. AFF = ABOVE FINISH FLOOR
2. ALL CEILING HEIGHTS ARE FROM ADJACENT FINISHED FLOOR.
3. CEILING HEIGHTS INDICATED ARE MINIMUM HEIGHTS. COORDINATE W/ PLUMBING, MECHANICAL, AND ELECTRICAL TO INSTALL CEILINGS AS HIGH AS POSSIBLE.
4. ALL CEILING GRIDS ARE TO BE CENTERED IN ROOM UNLESS SHOWN OR NOTED OTHERWISE.
5. COORDINATE W/ PLUMBING, MECHANICAL, AND ELECTRICAL DRAWINGS AND PROVIDE FRAMING AS REQUIRED TO ACCOMMODATE MECHANICAL AND PLUMBING SYSTEMS.

LIGHTING/ELECTRICAL NOTES

COORDINATE LIGHTING LAYOUTS WITH ELECTRICAL DRAWINGS. CONTACT ARCHITECT WITH ANY DISCREPANCIES.

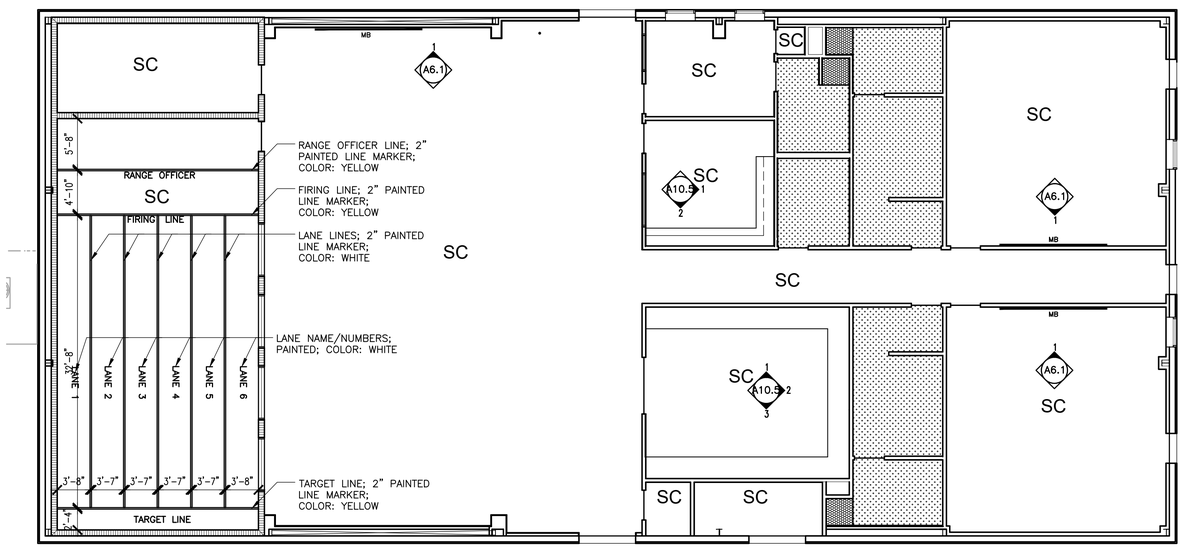

2 FINISH FLOOR PLAN - ALTERNATE

1/8" = 1'-0"

FINISH PATTERN LEGEND

SC — SC SEALED CONCRETE

PFT-1 PORCELAIN FLOOR TILE

ERF-1 EPOXY RESIN FLOORING

BASE

ITEM	MANUFACTURER	ITEM NUMBER/NAME
ERB-1	TORGINOL	MATCH TO ERF-1

PORCELAIN FLOOR TILE

ITEM	MANUFACTURER	ITEM NUMBER/NAME
PFT-1	DALTILE	COLLECTION: KEYSTONE COLOR: URBAN PUTTY D161 SIZE: 2X2 MOSAIC GROUT:

SEALED CONCRETE

ITEM	MANUFACTURER	ITEM NUMBER/NAME
SC	SEE SPEC	SEE SPEC

EPOXY

ITEM	MANUFACTURER	ITEM NUMBER/NAME
ERF-1	TORGINOL	COLOR FLAKES BLEND ID:CUSTOM COLOR BLEND:4 COLORS MAX SIZE:1/4"

PLASTIC LAMINATE

ITEM	MANUFACTURER	ITEM NUMBER/NAME
PL-1	WILSONART	COLOR: PEARL SOAPSTONE 4886-38 STANDARD LAMINATE WITH MATCHING EDGEBAND

PAINT

ITEM	MANUFACTURER	ITEM NUMBER/NAME	TYPE/LOCATION
PNT-1	SHERWIN WILLIAMS	COLOR: ACCESSIBLE BEIGE SW7036	GENERAL WALLS
PNT-2	SHERWIN WILLIAMS	COLOR: REPOSE GREY SW7015	GENERAL TRIM
PNT-3	SHERWIN WILLIAMS	COLOR: SHOJI WHITE SW7042	SHOWER SOFFITS
PNT-4	SHERWIN WILLIAMS	COLOR:	SHOOTING RANGE LINES
PNT-5	SHERWIN WILLIAMS	COLOR:	SHOOTING RANGE LINES

CERAMIC WALL TILE

ITEM	MANUFACTURER	ITEM NUMBER/NAME
CWT-1	DALTILE	COLLECTION: NATURAL HUES COLOR: MUSHROOM QH16 SIZE: 4 X 4 GROUT:

FINISH NOTES

ALL WALLS TO BE PAINTED PNT -1 UNLESS NOTED OTHERWISE.

ALL WALLS LOCATED IN WET AREAS SHALL HAVE EPOXY BASED PAINT

AT WET AREAS WHERE RUBBER BASE IS SCHEDULED TO BE INSTALLED, PROVIDE WATERPROOFING WHERE BASE MEETS FLOOR AS REQUIRED

LATHAN ARCHITECTS
LATHAN ▪ BRYANT ▪ CALMA

NEW JROTC FACILITY FOR PLEASANT GROVE HIGH SCHOOL
100 SPARTAN DRIVE, PLEASANT GROVE, ALABAMA 35127
JEFFERSON COUNTY BOARD OF EDUCATION

STATE OF ALABAMA
No. 3365
RICK N. LATHAN
REGISTERED ARCHITECT

SHEET TITLE:
REFLECTED CEILING PLAN, FINISH FLOOR PLAN AND LEGENDS - ALTERNATE

PROJ. MGR.: R. VERNON
DRAWN: K.SIMPSON
DATE: FEBRUARY 1, 2022
REVISIONS

JOB NO. 21-66
SHEET NO:
A10.7
16 OF 16

0 1" 2"

SDG
STRUCTURAL DESIGN GROUP
300 Chase Park South, Suite 125
Hoover, AL 35244
tel 205-824-5200
fax 205-824-5280
Job Number 22-001

GENERAL NOTES

1.0 DESIGN CRITERIA

1.1 CODES AND SPECIFICATIONS:

A. GENERAL BUILDING CODE:
INTERNATIONAL BUILDING CODE, 2015 EDITION.

B. CONCRETE:
BUILDING CODE REQUIREMENTS FOR STRUCTURAL CONCRETE (ACI 318-11)

C. STRUCTURAL STEEL:
SPECIFICATION FOR STRUCTURAL STEEL BUILDINGS, AMERICAN INSTITUTE OF STEEL CONSTRUCTION (ANSI/AISC 360-10)

D. COLD-FORMED STEEL FRAMING: AISI NORTH AMERICAN SPECIFICATION FOR THE DESIGN OF COLD-FORMED STEEL STRUCTURAL MEMBERS, AMERICAN IRON AND STEEL INSTITUTE (AISI S200-12)

1.2 DESIGN GRAVITY LOADS (PSF):

A. DEAD LOADS:
ANY CHANGES IN CONSTRUCTION MATERIALS FROM THOSE SHOWN ON THE ARCHITECTURAL OR STRUCTURAL DRAWINGS SHALL BE REPORTED BY THE GENERAL CONTRACTOR TO THE STRUCTURAL ENGINEER FOR VERIFICATION OF LOAD-CARRYING CAPACITY OF THE STRUCTURE.

B. ROOF LIVE LOADS:
WHERE PERMITTED ROOF LIVE LOADS ARE REDUCED FROM THE BASE VALUE SHOWN BELOW IN ACCORDANCE WITH IBC SECTION 1607.11

ROOF----------20

C. ROOF SNOW LOADS:
GROUND SNOW LOAD (Pg)----------0.0
IMPORTANCE FACTOR (I)----------1.2
EXPOSURE FACTOR (Ce)----------0.9
THERMAL FACTOR (Ct)----------1.0

1.3 DESIGN LATERAL LOADS:

A. WIND LOADS:
ULTIMATE DESIGN WIND SPEED (3-SECOND GUST)----------120MPH
NOMINAL WIND SPEED (3-SECOND GUST)----------90MPH
RISK CATEGORY----------III
WIND IMPORTANCE FACTOR (I)----------1.00
WIND EXPOSURE CATEGORY----------C
ENCLOSURE CATEGORY----------ENCLOSED
INTERNAL PRESSURE COEFFICIENTS---------- +/- 0.18
SEE TYPICAL DETAILS FOR COMPONENT AND CLADDING LOADS

B. SEISMIC LOADS:
SEISMIC IMPORTANCE FACTOR----------1.25
MAPPED SPECTRAL RESPONSE ACCELERATIONS:
SS----------0.269
S1----------0.106
SITE CLASS----------D
SPECTRAL RESPONSE COEFFICIENTS:
SDS----------0.284
SD1----------0.169
SEISMIC DESIGN CATEGORY----------C

C. THE FOLLOWING INFORMATION SHALL BE PROVIDED BY THE METAL BUILDING MANUFACTURER:

BASIC SEISMIC FORCE RESISTING SYSTEM
DESIGN BASE SHEAR
SEISMIC RESPONSE COEFFICIENT, Cs
RESPONSE MODIFICATION FACTOR, R
ANALYSIS PROCEDURE

2.0 GENERAL CONDITIONS

2.1 THE STRUCTURAL DRAWINGS AND SPECIFICATIONS ARE A PORTION OF THE CONSTRUCTION DOCUMENTS. THE GENERAL CONTRACTOR AND SUBCONTRACTORS SHALL REFERENCE AND COORDINATE WITH OTHER DISCIPLINE'S DRAWINGS. ANY DISCREPANCIES OR OMISSIONS SHALL BE IMMEDIATELY REPORTED TO THE ARCHITECT AND STRUCTURAL DESIGN GROUP.

2.2 ALL REPORTS, PLANS, SPECIFICATIONS, COMPUTER FILES, FIELD DATA, NOTES, AND OTHER DOCUMENTS AND INSTRUMENTS PREPARED BY STRUCTURAL DESIGN GROUP AS INSTRUMENTS OF SERVICE SHALL REMAIN THE PROPERTY OF STRUCTURAL DESIGN GROUP. STRUCTURAL DESIGN GROUP SHALL RETAIN ALL COMMON LAW, STATUTORY, AND OTHER RESERVED RIGHTS, INCLUDING THE COPYRIGHT THERETO.

2.3 STRUCTURAL DESIGN GROUP MAY CONSIDER TRANSFERRING COMPUTER AIDED DRAFTING FILES TO THE GENERAL CONTRACTOR'S SUBCONTRACTORS, ON A CASE BY CASE BASIS, FOR THEIR CONVENIENCE IN PREPARING SHOP FABRICATION DRAWINGS AT A COST OF $75 PER SHEET. FILES CAN BE TRANSFERRED UPON COMPLETION OF A CAD FILE TRANSFER AGREEMENT AND RECEIPT OF FULL PAYMENT.

2.4 CONTRACTOR SHALL VERIFY ALL EXISTING DIMENSIONS, ELEVATIONS AND SITE CONDITIONS PRIOR TO FABRICATION/CONSTRUCTION. NOTIFY STRUCTURAL ENGINEER AND ARCHITECT OF ANY DISCREPANCIES PRIOR TO FABRICATION/CONSTRUCTION.

2.5 ALL SHOP DRAWINGS SHALL BE ACCOMPANIED BY A PROPERLY COMPLETED SUBMITTAL CHECKLIST, WHERE REQUIRED BY THE RELEVANT SPECIFICATION SECTION.

2.6 WHERE SHOP DRAWINGS, CALCULATIONS, OR SUBMITTALS ARE CALLED FOR IN THE PROJECT DOCUMENTS (DRAWINGS AND SPECIFICATIONS) AND ARE NOT PROVIDED BY THE CONTRACTOR, THE CONTRACTOR ASSUMES TOTAL RESPONSIBILITY FOR THE DESIGN AND ASSOCIATED WORK.

2.7 ENGINEER'S SHOP DRAWING REVIEW IS LIMITED TO REVIEW FOR GENERAL CONFORMANCE WITH THE DESIGN INTENT REFLECTED IN THE STRUCTURAL PORTION OF THE CONTRACT DOCUMENTS. THIS REVIEW DOES NOT RELIEVE THE CONTRACTOR FROM COMPLIANCE WITH THE DRAWINGS, SPECIFICATIONS OR OTHER PROJECT CONTRACT DOCUMENTS. NO RESPONSIBILITY IS ASSUMED OR IMPLIED FOR THE CORRECTNESS OF DIMENSIONS OR DETAILS. THIS REVIEW DOES NOT AUTHORIZE CHANGES TO THE CONTRACT SUM UNLESS STATED IN A SEPARATE WRITTEN FORM OR CHANGE ORDER. CONTRACTOR SHALL CONFIRM AND CORRELATE ALL QUANTITIES AND DIMENSIONS, SELECT FABRICATION PROCESSES AND TECHNIQUES OF CONSTRUCTION, COORDINATE HIS WORK WITH THAT OF OTHER TRADES, AND PERFORM HIS WORK IN A SAFE AND SATISFACTORY MANNER. CONTRACTOR SHALL ALSO REFER TO THE REQUIREMENTS OF THE GENERAL AND SUPPLEMENTARY GENERAL CONDITIONS.

2.8 ALL DETAILS SHOWN ARE TYPICAL. SIMILAR DETAILS APPLY TO SIMILAR CONDITIONS, UNLESS NOTED.

2.9 VERIFY ALL DIMENSIONS AND DETAILS SHOWN ON THESE DRAWINGS. ANY DISCREPANCIES OR OMISSIONS FOUND SHALL BE REPORTED TO THE ENGINEER AND OTHER DESIGN PROFESSIONALS AS APPROPRIATE FOR RESOLUTION PRIOR TO PROCEEDING WITH ANY RELATED WORK.

2.10 THESE DRAWINGS DO NOT INCLUDE PROVISIONS TO SATISFY JOB SITE SAFETY REQUIREMENTS. CONTRACTOR IS SOLELY RESPONSIBLE FOR ENSURING SAFETY DURING CONSTRUCTION AND FOR CONFORMANCE TO ALL APPLICABLE OSHA STANDARDS. JOBSITE VISITS BY ENGINEER SHALL NOT CONSTITUTE APPROVAL, AWARENESS OR LIABILITY FOR ANY HAZARDOUS CONDITIONS.

2.11 STRUCTURAL DESIGN GROUP IS NOT RESPONSIBLE FOR CONSTRUCTION MEANS AND METHODS, SAFTEY PROCEEDURES, CONSTRUCTION SUPERVISION OR SITE SAFETY, AND DOES NOT HAVE THE AUTHORITY TO STOP WORK FOR THESE ITEMS.

2.12 STRUCTURAL OBSERVATION IS VISUAL OBSERVATION OF THE IN PLACE STRUCTURE FOR GENERAL CONFORMANCE TO THE APPROVED STRUCTURAL PORTIONS OF THE CONSTRUCTION DOCUMENTS AT THE TIME OF THE OBSERVATION AND SHALL NOT BE CONSTRUED AS INSPECTION OR APPROVAL OF CONSTRUCTION. THE CONTRACTOR SHALL BE RESPONSIBLE FOR COORDINATING TESTING AND SPECIAL INSPECTIONS PER THE REQUIREMENTS IN THE PROJECT MANUAL.

2.13 THE CONTRACTOR IS SOLELY RESPONSIBLE FOR BRACING AND SHORING ALL EXCAVATIONS, DEWATERING OF EXCAVATION FROM EITHER SURFACE WATER, GROUND WATER OR SEEPAGE, TEMPORARY AND EXISTING STRUCTURES, AND PARTIALLY COMPLETED PORTIONS OF THE WORK TO ASSURE THE SAFETY OF ANY PERSON COMING IN CONTACT WITH THE WORK.

2.14 OBSERVATION BY THE ENGINEER OF RECORD'S OFFICE DOES NOT REPLACE INSPECTIONS AND TESTING BY THE TESTING AGENCY OR SPECIAL INSPECTOR.

2.15 ALL SUBMITTALS: IF THERE ARE QUESTIONS, CLARIFICATIONS, MODIFICATIONS, OR ITEMS WHERE INFORMATION, A RESPONSE, OR APPROVAL IS REQUESTED, SUCH ITEMS SHALL BE WRITTEN ON THE TRANSMITTAL OR COVER SHEET. WHERE SUBMITTAL CHECKLISTS ARE REQUIRED BY THE RELEVANT SPECIFICATION, THE AFOREMENTIONED INFORMATION MUST BE INDICATED ON THE SUBMITTAL CHECKLIST IN ACCORDANCE WITH THE RELEVANT SPECIFICATION. INDICATING SUCH ITEMS ON THE SHOP DRAWINGS, WITHIN ANY CALCULATIONS, OR PRODUCT DATA IS NOT SUFFICIENT. WHERE SUCH ITEMS ARE NOT SPECIFICALLY LISTED ON THE TRANSMITTAL, COVER SHEET, OR CHECKLIST IN ACCORDANCE WITH THESE GENERAL NOTES AND THE SPECIFICATIONS, SUCH ITEMS ARE NOT TO BE CONSIDERED APPROVED OR CONSIDERED. IF A QUESTION, CLARIFICATION, MODIFICATION, OR REQUEST FOR INFORMATION IS MADE AND NOT SPECIFICALLY RESPONDED TO BY STRUCTURAL DESIGN GROUP, NO APPROVAL OR CONSENT SHALL BE ASSUMED. THE CONTRACTOR SHALL ASSUME TOTAL LIABILITY AND RESPONSIBILITY IN ALL CASES WHERE SPECIFIC WRITTEN RESPONSE FROM STRUCTURAL DESIGN GROUP IS NOT OBTAINED, REGARDLESS OF ANY OTHER ACTIONS TAKEN BY STRUCTURAL DESIGN GROUP.

3.0 FOUNDATIONS

3.1 GEOTECHNICAL REPORT: FOUNDATION DESIGN IS BASED ON THE GEOTECHNICAL REPORT BY BHATE, TITLED PLEASANT GROVE HIGH SCHOOL JROTC FACILITY PROJECT NO.122117"ALONG WITH ANY SUPPLEMENTAL CORRESPONDENCE. THE GENERAL CONTRACTOR SHALL OBTAIN A COPY OF THE GEOTECHNICAL REPORT FROM THE OWNER AND FOLLOW ALL REQUIREMENTS AND RECOMMENDATIONS. GEOTECHNICAL RECOMMENDATIONS SHALL TAKE PRECEDENCE OVER THE ITEMS THAT FOLLOW IN THIS SECTION OF THE STRUCTURAL GENERAL NOTES.

3.2 MAXIMUM ALLOWABLE BEARING PRESSURE PER GEOTECHNICAL REPORT: 2000 PSF.

3.3 ALL BUILDING FOUNDATION BEARING SURFACES SHALL MEET THE REQUIREMENTS PROVIDED BY THE GEOTECHNICAL ENGINEER. ALL COMPACTED FILL BELOW SLABS ON GRADE WITHIN THE BUILDING AREA AND 10 FEET OUTSIDE THE BUILDING AREA SHALL MEET THE REQUIREMENTS PROVIDED BY THE GEOTECHNICAL ENGINEER.

3.4 BACKFILL FOR FOUNDATION WALLS SHALL BE A FREE DRAINING GRANULAR MATERIAL, SUCH AS SIZE #57 STONE. BACKFILL SHALL BE COMPACTED SUFFICIENTLY TO PREVENT SUBSIDENCE OF SURFACE ADJACENT TO WALL. THE GRANULAR MATERIAL SHALL BE PLACED IN A 45 DEGREE WEDGE EXTENDING FROM THE BASE OF THE FOOTING.

3.5 GRANULAR BACKFILL SUPPORTING A FOOTING SHALL BE COMPACTED UNDER THE DIRECT SUPERVISION OF THE GEOTECHNICAL ENGINEER OR HIS APPROVED REPRESENTATIVE. PROVIDE A 12" THICK CAP OF PROPERLY COMPACTED CRUSH AND RUN STONE BETWEEN THE FOOTING AND THE PROPERLY COMPACTED GRANULAR BACKFILL. EXTEND CRUSH AND RUN CAP TWO FEET BEYOND THE PERIMETER OF THE FOOTING OR AS DIRECTED BY THE GEOTECHNICAL ENGINEER.

3.6 FOUNDATION AND RETAINING WALLS SHALL NOT BE BACKFILLED UNTIL CONCRETE HAS ATTAINED THE REQUIRED 28 DAY COMPRESSIVE STRENGTH.

3.7 REINFORCING STEEL IN CONTINUOUS WALL FOOTINGS SHALL EXTEND THRU SPREAD FOOTINGS AT THE SAME ELEVATION AS WALL FOOTING. STEP WALL FOOTING DOWN ON SPREAD FOOTING WHERE SPREAD FOOTING IS BELOW CONTINUOUS WALL FOOTING.

3.8 SUBGRADE AND GRANULAR FILL SUPPORTING SLABS ON GRADE SHALL BE AS RECOMMENDED BY THE GEOTECHNICAL ENGINEER AND COMPACTED UNDER THE DIRECT SUPERVISION OF THE OWNERS GEOTECHNICAL ENGINEER OR HIS APPROVED REPRESENTATIVE. SEE SPECIFICATIONS FOR VAPOR RETARDER BENEATH SLABS ON GRADE.

3.9 GRANULAR FILL BENEATH SLABS, UNLESS NOTED OTHERWISE, SHALL BE 4" COMPACTED #57 STONE.

3.10 VAPOR RETARDER BENEATH SLABS ON GRADE, UNLESS NOTED, SHALL MEET ASTM E 1745, CLASS A, 15 MIL MINIMUM THICKNESS WITH MANUFACTURER'S RECOMMENDED ADHESIVE OR PRESSURE-SENSITIVE TAPE AND PIPE BOOTS, SUCH AS W.R. MEADOWS INC. PRODUCT PERMINATOR 15.

3.11 NO EXCAVATION SHALL BE CLOSER THAN AT A SLOPE OF 2:1 (TWO HORIZONTAL TO ONE VERTICAL) TO A FOOTING.

4.0 CONCRETE

4.1 CONCRETING OPERATIONS SHALL COMPLY WITH ACI STANDARDS.

4.2 CONCRETE COMPRESSIVE STRENGTH AT 28 DAYS (PSI), TYPE OF CONCRETE, MAXIMUM WATER/CEMENTITIOUS RATIO, AIR CONTENT, SLUMP, AND CONCRETE USE:

STRENGTH	TYPE	MAX W/C	AIR	MAX SLUMP	USE
3000	NORMAL WT.	0.57	----	3"	FOOTINGS
4000	NORMAL WT.	0.45	----	4"	FLOOR SLABS AND TURNDOWN FOOTINGS

NOTE: THE USE OF WATER-REDUCING SUPERPLASTICIZER ADMIXTURE TO INCREASE THE WORKABILITY OF THE CONCRETE IS PERMITTED. USE EUCON 37, BY THE EUCLID CHEMICAL COMPANY, OR APPROVED EQUAL. SAID ADMIXTURE WILL BE ADDED DURING THE BATCHING PROCESS IN STRICT COMPLIANCE WITH THE MANUFACTURER'S DIRECTIONS FOR USE.

4.3 REINFORCING BARS: ASTM A615 GRADE 60.

4.4 REINFORCING STEEL SHOWN IN SECTIONS AND DETAILS ARE A SCHEMATIC INDICATION THAT REINFORCING EXISTS. SEE SCHEDULES, SECTION NOTES AND GENERAL NOTES FOR ACTUAL REINFORCING REQUIRED.

4.5 REINFORCING BAR PLACING ACCESSORIES IN ACCORDANCE WITH ACI MANUAL OF STANDARD PRACTICE. WHERE CONCRETE IS EXPOSED IN FINISHED BUILDING, PROVIDE ACCESSORIES WITH RUSTPROOF LEGS. WHERE CONCRETE IS SAND-BLASTED OR BUSH-HAMMERED, PROVIDE ACCESSORIES OF STAINLESS STEEL.

4.6 DETAIL REINFORCEMENT IN ACCORDANCE WITH ACI 315. REINFORCEMENT SHALL NOT BE WELDED UNLESS NOTED OR APPROVED BY THE ENGINEER.

4.7 ALL SPLICES SHALL BE CLASS "B" TENSION LAP SPLICE, UNLESS NOTED.

4.8 ALL REINFORCING MARKED "CONTINUOUS" SHALL BE SPLICED WITH CLASS "B" TENSION LAP SPLICE, UNLESS NOTED.

4.9 CONCRETE COVERAGE OF REINFORCEMENT, UNLESS NOTED:

FOOTINGS----------2" TOP & 3" BOTTOM & SIDES
GRADE BEAMS----------2" TOP & 3" BOTTOM & SIDES
PEDESTALS----------1-1/2" CLEAR OF TIES
FOUNDATION RETAINING WALLS----------2" BOTH FACES

NOTE: SLAB ON GRADE REINFORCEMENT EACH WAY SHALL BE 2" CLEAR FROM TOP OF SLAB. SEE EARTH SUPPORTED SLABS SECTION BELOW.

4.10 PEDESTAL, COLUMN AND WALL VERTICAL REINFORCING: DOWEL TO FOUNDATION WITH HOOKED BARS OF SAME SIZE AND SPACING AS VERTICAL REINFORCING.

4.11 WELDED WIRE REINFORCEMENT (WWR): ASTM A185. MINIMUM LAP AND EMBEDMENT TO BE THE GREATER OF ONE CROSS WIRE SPACING PLUS 2 INCHES OR 6 INCHES.

4.12 EARTH SUPPORTED SLABS:

4" THICK (UNLESS NOTED), REINFORCED WITH 6X6 W2.9/W2.9 WWR FLAT SHEETS SUPPORTED 2" CLEAR OF TOP OF SLAB, UNLESS NOTED. WWR TO BE CHAIRED AT 36 INCHES EACH WAY MINIMUM. SEE FOUNDATION NOTES FOR SUBGRADE REQUIREMENTS.

SAW CUT SLABS AS INDICATED ON PLANS. CUTTING SHOULD BE STARTED AS SOON AS CONCRETE HAS HARDENED SUFFICIENTLY TO PREVENT AGGREGATE FROM BEING DISLODGE. CONTRACTOR SUBMIT PLAN SHOWING LOCATION OF CONSTRUCTION AND CONTROL JOINTS.

FLOOR DESIGN AND CONSTRUCTION BASIS IS ACI 302 AND 360, AND IT IS UNREALISTIC TO EXPECT CRACK-FREE OR CURL-FREE FLOORS. IT IS NORMAL TO EXPECT SOME AMOUNT OF CRACKING AND CURLING IN THE SLAB ON GRADE, AND SUCH OCCURRENCE DOES NOT NECESSARILY REFLECT ADVERSELY ON EITHER THE ADEQUENCY OF THE FLOOR DESIGN OR THE QUALITY OF ITS CONSTRUCTION.

EARTH SUPPORTED SLABS SHALL BE MOIST CURED FOR A MINIMUM OF SEVEN DAYS. SEE SPECIFICATIONS FOR ADDITIONAL INFORMATION. CURING COMPOUNDS, UNLESS NOTED, SHALL BE A MINIMUM OF CLEAR, WATERBORNE, MEMBRANE-FORMING CURING COMPOUND MEETING ASTM C 309, TYPE 1, CLASS B, SELF-DISSIPATING, CERTIFIED BY CURING COMPOUND MANUFACTURER TO NOT INTERFERE WITH BONDING OF FLOOR COVERING.

WHERE CONTROL JOINTS TERMINATE INTO NON-PARALLEL CONTROL JOINTS, PROVIDE 2#4 X 6'-0" BARS MID DEPTH OF SLAB PERPENDICULAR TO TERMINAL CONTROL JOINT.

PROVIDE 2#4 X 6'-0" BARS MID DEPTH OF SLAB AT REENTRANT CORNERS.

4.13 NO CONDUIT OR PIPE SHALL BE CAST IN THE SLAB WITHOUT THE WRITTEN APPROVAL OF STRUCTURAL DESIGN GROUP. CONDUIT SHALL NOT BE PLACED IN SLABS REQUIRING A FIRE RESISTANCE RATING OR UL RATING.

5.0 STRUCTURAL STEEL

5.1 FABRICATE AND ERECT ALL STRUCTURAL STEEL IN ACCORDANCE WITH AISC "SPECIFICATION FOR THE DESIGN, FABRICATION, AND ERECTION OF STRUCTURAL STEEL FOR BUILDINGS".

5.2 THE STEEL FRAME IS "NON-SELF-SUPPORTING". ADEQUATE TEMPORARY SUPPORT MUST BE PROVIDED BY THE CONTRACTOR UNTIL REQUIRED CONNECTIONS OR ELEMENTS ARE IN PLACE.

5.3 STRUCTURAL STEEL: ASTM A992 FOR WIDE FLANGE BEAMS AND COLUMNS; A36 FOR S, M AND HP SHAPES AND CHANNELS; ASTM A36 FOR STIFFENER PLATES, BASE PLATES, COLUMN CAP PLATES, BEAM CONNECTION PLATES AND STEEL ANGLES.

5.4 WELDED CONNECTIONS: E70XX ELECTRODES, MINIMUM SIZE FILLET WELD 3/16". WELDING QUALIFICATION, PROCEDURES AND PERSONNEL SHALL BE CERTIFIED ACCORDING TO AWS D1.1, THE STRUCTURAL WELDING CODE - STEEL.

5.5 THREADED AND PLAIN STEEL RODS: ASTM A36

5.6 ANCHOR RODS: ASTM F1554 GRADE 36 HEADED BOLT ANCHOR AND HEAVY HEX NUT WITH SUPPLEMENTARY REQUIREMENT S1, UNLESS OTHERWISE INDICATED.

5.7 ALL STRUCTURAL STEEL, INCLUDING EXPOSED BOLTS, NUTS, WASHERS OR ANCHOR RODS, EXPOSED TO WEATHER IN THE FINAL CONFIGURATION OF THE STRUCTURE SHALL BE HOT-DIP GALVANIZED, UNLESS NOTED, PER ASTM A 123/A 123M. VENT HOLES SHALL BE FILLED AND GROUND SMOOTH AFTER GALVANIZING. DAMAGE TO GALVANIZING SHALL BE PAINTED WITH GALVANIZING REPAIR PAINT, SSPC-PAINT 20. SEE 05120 SPECIFICATION FOR PAINT REQUIREMENTS FOR STEEL THAT IS GALVANIZED AND PAINTED.

5.8 ALL HANDRAILS, GUARDRAILS, AND EMBEDS NOT SPECIFICALLY DETAILED ON THE DRAWINGS SHALL BE DESIGNED IN ACCORDANCE WITH THE APPLICABLE BUILDING CODE NOTED ABOVE, BY THE CONTRACTOR, UNDER THE DIRECT SUPERVISION OF A PROFESSIONAL ENGINEER REGISTERED IN THE STATE WHERE THE PROJECT IS LOCATED. CALCULATIONS SHALL BEAR THE SEAL OF THE PROFESSIONAL ENGINEER REGISTERED IN THE STATE WHERE THE PROJECT IS LOCATED AND SHALL BE SUBMITTED FOR THE FILES OF THE ARCHITECT AND SHALL BE INCLUDED WITH THE SHOP DRAWINGS.

6.0 PREFABRICATED METAL BUILDING

6.1 METAL BUILDING MANUFACTURER SHALL BE A MEMBER OF MBMA (METAL BUILDING MANUFACTURERS ASSOCIATION) AND BE AISC CERTIFIED FOR CATEGORY MB.

6.2 METAL BUILDING SHALL BE DESIGNED IN ACCORDANCE WITH THE METAL BUILDING MANUFACTURERS ASSOCIATION'S DESIGN PRACTICES MANUAL 1996. METAL BUILDING LIVE LOADS AND LATERAL LOADS TO MEET THE GENERAL BUILDING CODE NOTED ABOVE.

6.3 COLLATERAL LOADS FROM COMPONENTS SUPPORTED ON OR SUSPENDED FROM THE ROOF STRUCTURE SHALL BE INCLUDED IN THE DESIGN OF THE METAL BUILDING SEE ARCHITECTURAL DRAWINGS FOR LOCATION AND TYPE OF SUSPENDED CEILING. SEE STRUCTURAL AND MECHANICAL DRAWINGS FOR LOCATION AND MAGNITUDE OF SUPPORTED EQUIPMENT. MINIMUM DESIGN COLLATERAL LOAD SHALL BE 10 PSF UNLESS NOTED.

6.4 ANCHOR ROD SIZE, TOTAL LENGTH, AND LOCATION BY METAL BUILDING SUPPLIER. FOR ANCHOR ROD EMBEDMENT LENGTH, SEE SHEET S1.5. ANCHOR RODS PURCHASED AND INSTALLED BY GENERAL CONTRACTOR.

6.5 BEFORE FOOTING INSTALLATION, THE ANCHOR ROD EMBEDMENT LENGTHS MUST BE VERIFIED. THE FOOTING DEPTH SHALL BE THE SCHEDULED DEPTH OR THE ANCHOR ROD EMBEDMENT LENGTH PLUS 3 INCHES, WHICHEVER IS GREATER.

6.6 HORIZONTAL FORCE TRANSFER FROM METAL BUILDING COLUMN BASE TO CONCRETE SHALL BE BY THE METAL BUILDING SUPPLIER.

6.7 METAL BUILDING SUPPLIER TO VERIFY COLUMN LAYOUT. ANY CHANGES MUST BE SUBMITTED FOR REVIEW OF FOUNDATION DESIGN BEFORE CONSTRUCTION STARTS.

6.8 GRAVITY DESIGN LOADS:
LIVE LOAD: 20 PSF (REDUCIBLE AT RIGID FRAME RAFTERS AND COLUMNS ONLY)
DEAD LOAD: WEIGHT OF STRUCTURE
COLLATERAL LOAD: INCLUDE ADDITIONAL DEAD LOADS OTHER THAN THE WEIGHT OF THE STRUCTURE FOR PERMANENT ITEMS SUCH AS SPRINKLERS, MECHANICAL SYSTEMS, ELECTRICAL SYSTEMS, CEILING, LIGHTS, DUCTS, ETC. MINIMUM DESIGN COLLATERAL LOAD SHALL BE 10 PSF UNLESS NOTED.

6.9 DEFLECTION LIMITS FOR MEMBERS:
PURLINS AND RAFTERS: DL L/360 LL L/360 TL L/240
GIRTS: HORIZONTAL DEFLECTION OF L/240
OVERALL BUILDING DRIFT: L/300

6.10 ROOF PURLINS MUST BE CAPABLE OF RESISTING NET WIND PRESSURES (IN OR OUT) ASSUMING INTERIOR FLANGE UNBRACED EXCEPT WHERE FLANGE BRACING IS PROVIDED.

6.11 THE METAL BUILDING MANUFACTURER WILL BE RESPONSIBLE FOR COMPLETE DESIGN OF THE BUILDING STRUCTURAL FRAME (INCLUDING LATERAL LOADS) DOWN TO THE FOUNDATION. THE DESIGN SHALL BE PERFORMED BY A PROFESSIONAL ENGINEER REGISTERED IN THE STATE WHERE THE PROJECT IS LOCATED.

LATHAN ARCHITECTS
LATHAN • BRYANT • CALMA

NEW JROTC FACILITY FOR
PLEASANT GROVE HIGH SCHOOL
100 SPARTAN DRIVE, PLEASANT GROVE, AL 35127
JEFFERSON COUNTY BOARD OF EDUCATION

ALABAMA REGISTERED No. 22596 PROFESSIONAL ENGINEER CRAIG WINN
H. Craig Winn, P.E.
2-1-2022

SHEET TITLE:
GENERAL NOTES

PROJ. MGR.:	HCW
DRAWN:	ABS
DATE:	FEBRUARY 1, 2022
REVISIONS	

JOB NO. 21-66

SHEET NO:
S1.0
1 OF 10

0 1" 2"

GENERAL NOTES CONTINUED

6.12 BEFORE INSTALLATION OF FOUNDATIONS, METAL BUILDING SUPPLIER SHALL SUBMIT DESIGN LOADS AND COLUMN REACTIONS TO THE ARCHITECT/ENGINEER FOR REVIEW. THE CURRENT FOUNDATION DESIGN HAS BEEN BASED ON ASSUMED METAL BUILDING REACTIONS AS SHOWN IN THE TYPICAL DETAILS. THIS MAY REQUIRE ADJUSTMENTS TO THE FOUNDATION SIZES AFTER REVIEW OF THE FINAL METAL BUILDING COLUMN REACTIONS.

6.13 METAL BUILDING DESIGN CALCULATIONS' COVER SHEET AND ALL METAL BUILDING SHOP DRAWINGS AND ERECTION DRAWINGS SHALL BE SEALED AND SIGNED BY THE MANUFACTURER'S PROFESSIONAL ENGINEER REGISTERED IN THE STATE WHERE THE PROJECT IS LOCATED.

6.14 MASONRY WALLS ON COLUMN LINES SHALL NOT BE USED AS SHEAR WALLS FOR THE METAL BUILDING.

6.15 ALL COLUMNS SHALL BE ANALYZED AND DESIGNED AS HAVING PINNED BASES.

6.16 EXCEPT AS OTHERWISE APPROVED BY ARCHITECT, STRUCTURAL CLEARANCES SHALL BE MAINTAINED AS CURRENTLY INDICATED IN THE CONTRACT DOCUMENTS.

6.17 STANDING SEAM STEEL DECK SHALL NOT BE CONSIDERED AS PROVIDING DIAPHRAGM RESISTANCE FOR LATERAL WIND LOADS.

6.18 ALL DEVIATIONS FROM THE CONTRACT DOCUMENTS ARE SUBJECT TO APPROVAL BY THE ARCHITECT AND STRUCTURAL ENGINEER OF RECORD. ALL DEVIATIONS SHALL BE EXPRESSLY LISTED AND DEFINED IN THE SHOP DRAWING SUBMITTAL. ARCHITECT AND STRUCTURAL ENGINEER ARE NOT RESPONSIBLE FOR DISCOVERY OF DEVIATIONS NOT LISTED, AND APPROVAL OF UNLISTED DEVIATIONS SHALL NOT BE IMPLIED.

7.0 COLD-FORMED STEEL FRAMING (NON-LOAD BEARING)

7.1 STRUCTURAL PROPERTIES OF FRAMING MEMBERS SHALL BE COMPUTED IN ACCORDANCE WITH AISI "NORTH AMERICAN STANDARD FOR COLD-FORMED STEEL FRAMING".

7.2 UNLESS SPECIFICALLY DESIGNED AND DETAILED IN DRAWINGS, GENERAL CONTRACTOR SHALL BE RESPONSIBLE FOR THE DESIGN OF ALL COLD-FORMED STEEL FRAMING. SEE ARCHITECTURAL DETAILS FOR FRAMING LAYOUT AND SECTIONS. COLD-FORMED STEEL FRAMING SHOP DRAWINGS AND DESIGN CALCULATIONS SHALL BE SUBMITTED FOR FILES OF THE STRUCTURAL ENGINEER. CALCULATIONS SHALL BEAR THE SEAL OF A PROFESSIONAL ENGINEER REGISTERED IN THE STATE WHERE THE PROJECT IS LOCATED.

7.3 DEFLECTION LIMITS FOR MEMBERS:

A.	SOFFITS:	DL L/240 LL L/240 TL L/180
B.	WALL SUPPORTING BRICK:	HORIZONTAL DEFLECTION OF L/600
C.	WALL SUPPORTING STUCCO:	HORIZONTAL DEFLECTION OF L/360
D.	WALL SUPPORTING EIFS:	HORIZONTAL DEFLECTION OF L/240
E.	WALL PARTITIONS:	HORIZONTAL DEFLECTION OF L/180

7.4 COLD-FORMED STEEL FRAMING MEMBERS SHALL NOT BE SUPPORTED BY THE STEEL ROOF DECK.

7.5 COLD-FORMED STEEL FRAMING MEMBERS ABUTTING STRUCTURE SHALL HAVE VERTICAL SLIP TRACKS TO ACCOMMODATE UP TO 1-1/2" VERTICAL MOVEMENT UP OR DOWN.

7.6 VERTICAL STUDS INTERRUPTED BY WALL OPENINGS SHALL BE LOCATED EQUALLY ON EACH SIDE OF THE OPENING. PROVIDE EVEN NUMBER OF FULL HEIGHT STUDS ON EACH SIDE OF OPENING. WELD STUD FLANGES TOGETHER WITH 1/8" FILLET WELD 1" LONG SPACED AT 6" OC.

7.7 WELDED CONNECTIONS: E60XX ELECTRODES, MINIMUM SIZE FILLET WELD 1/8": WELDING QUALIFICATION, PROCEDURES AND PERSONNEL SHALL BE CERTIFIED ACCORDING TO AWS D1.3, THE STRUCTURAL WELDING CODE - SHEET STEEL.

7.8 PROVIDE SHOP DRAWINGS SHOWING PLANS, ELEVATIONS AND CONNECTION DETAILS AT ALL NON-LOAD BEARING STEEL FRAMING.

8.0 POST-INSTALLED ANCHORS AND REINFORCING

8.1 POST-INSTALLED ANCHORS AND/OR REINFORCING SHALL ONLY BE USED WHERE SPECIFIED ON THE CONSTRUCTION DOCUMENTS. THE CONTRACTOR SHALL OBTAIN APPROVAL FROM THE ENGINEER-OF-RECORD PRIOR TO INSTALLING POST-INSTALLED ANCHORS AND/OR REINFORCING IN PLACE OF MISSING OR MISPLACED CAST-IN-PLACE ANCHORS AND/OR REINFORCING.

8.2 THE BELOW PRODUCTS ARE THE DESIGN BASIS FOR THIS PROJECT. PRODUCT DIAMETER AND EMBEDMENT SHALL BE SHOWN IN THE DETAILS

8.3 FOR ANCHORING INTO CONCRETE:

A. MECHANICAL ANCHORS SHALL HAVE BEEN TESTED IN ACCORDANCE WITH ACI 355.2 AND ICC-ES AC193 FOR CRACKED CONCRETE AND SEISMIC APPLICATIONS. PRE-APPROVED PRODUCTS INCLUDE:

1. SIMPSON STRONG-TIE "TITEN-HD" (ICC-ES ESR-2713)
2. SIMPSON STRONG-TIE "STRONG-BOLT 2" (ICC-ES ESR-3037)
3. SIMPSON STRONG-TIE "TORQ-CUT" (ICC-ES ESR-2705)
4. SIMPSON STRONG-TIE "TITEN-HD ROD HANGER" (ICC-ES ESR-2713)
5. HILTI KWIK HUS-EZ AND KWIK HUS EZ-I SCREW ANCHORS (ICC ESR-3027)
6. HILTI KWIK BOLT-TZ EXPANSION ANCHORS (ICC ESR-1917)
7. HILTI KWIK BOLT 3 EXPANSION ANCHORS (UNCRACKED CONCRETE ONLY) (ICC ESR-2302)
8. HILTI HDA UNDERCUT ANCHORS (ICC ESR 1546)
9. HILTI HSL-3 EXPANSION ANCHORS (ICC ESR 1545)
10. DEWALT SCREW-BOLT+ (ICC-ES ESR-3889)
11. DEWALT POWER-STUD+ SD2 (ICC-ES ESR-2502)
12. DEWALT POWER-STUD SD1 (ICC-ES ESR-2818)
13. DEWALT HANGERMATE+ (ICC-ES ESR-3889)
14. DEWALT ATOMIC+ UNDERCUT (ICC-ES ESR-3067)
15. DEWALT POWER-BOLT+ (ICC-ES ESR-3260)

B. ADHESIVE FOR REBAR AND ANCHORS SHALL HAVE BEEN TESTED IN ACCORDANCE WITH ACI 355.4 AND ICC-ES AC308 FOR CRACKED CONCRETE AND SEISMIC APPLICATIONS. DESIGN ADHESIVE BOND STRENGTH HAS BEEN BASED ON ACI 355.4 TEMPERATURE CATEGORY B WITH INSTALLATIONS INTO DRY HOLES DRILLED USING A CARBIDE DRILL BIT INTO CRACKED CONCRETE THAT HAS CURED FOR AT LEAST 21 DAYS. ADHESIVE ANCHORS REQUIRING CERTIFIED INSTALLATIONS, SUCH AS HORIZONTAL TO UPWARD INCLINED ORIENTATION UNDER SUSTAINED TENSION LOADING, SHALL BE INSTALLED BY A CERTIFIED ADHESIVE ANCHOR INSTALLER PER ACI 318-11 D.9.2.2. INSTALLATIONS REQUIRING CERTIFIED INSTALLERS SHALL BE INSPECTED PER ACI 318-11 D.9.2.4. PRE-APPROVED PRODUCTS INCLUDE:

1. SIMPSON STRONG-TIE "SET-3G" (ICC-ES ESR-4057)
2. SIMPSON STRONG-TIE "AT-XP" (IAPMO-UES ER-263)
3. HILTI HIT-HY 200 (ICC ESR-3187)
4. HILTI HIT-RE 500-SD (ICC ESR-2322) FOR SLOW CURE APPLICATIONS.
5. DEWALT PURE110+ (ICC-ES ESR-3298)
6. DEWALT AC200+ (ICC-ES ESR-4027)

C. POWER-ACTUATED FASTENERS SHALL HAVE BEEN TESTED IN ACCORDANCE WITH ICC-ES AC70. PRE-APPROVED PRODUCTS INCLUDE:

1. SIMPSON STRONG-TIE "GAS ACTUATED PINS" (ICC-ES ESR-2811)
2. SIMPSON STRONG-TIE "POWDER ACTUATED PINS" (ICC-ES ESR-2138)
3. HILTI "UNIVERSAL KNURLED SHANK FASTENERS" X-U (ICC ESR-2269)
4. DEWALT "POWER DRIVEN FASTENERS", POWDER ACTUATED (ICC-ES-ESR 2024)
5. DEWALT TRAK-IT C5, GAS ACTUATED (ICC-ES-ESR 3275)

8.4 FOR FASTENING INTO STEEL: POWER-ACTUATED FASTENERS SHALL HAVE BEEN TESTED IN ACCORDANCE WITH ICC-ES AC70. PRE-APPROVED PRODUCTS INCLUDE:

A. SIMPSON STRONG-TIE "GAS ACTUATED PINS" (ICC-ES ESR-2811)
B. SIMPSON STRONG-TIE "POWDER ACTUATED PINS" (ICC-ES ESR-2138)
C. HILTI FASTENERS IN LIEU OF #12 TEK SCREWS:

1. HILTI S-MD 12-24X1-5/8 HWHS SCREWS FOR STUDS, JOISTS AND BEAMS 16 GA ≤ TF ≤ 1/4"
2. HILTI X-HSN 24 PINS FOR JOISTS AND BEAM 1/8" ≤ TF ≤ 3/8"
3. HILTI X-ENP 19 L15 PINS FOR BEAMS TF ≥ 1/4".

D. DEWALT "POWER DRIVEN FASTENERS", POWDER ACTUATED (ICC-ES-ESR 2024)
E. DEWALT TRAK-IT C5, GAS ACTUATED (ICC-ES-ESR 3275)

8.5 REFER TO THE PROJECT BUILDING CODE AND/OR EVALUATION REPORT FOR SPECIAL INSPECTIONS AND PROOF LOAD REQUIREMENTS.

8.6 SUBSTITUTION REQUESTS FOR PRODUCTS OTHER THAN THOSE LISTED MAY BE SUBMITTED BY THE CONTRACTOR TO THE EOR FOR REVIEW. SUBSTITUTIONS WILL ONLY BE CONSIDERED FOR PRODUCTS HAVING A RESEARCH REPORT RECOGNIZING THE PRODUCT FOR THE APPROPRIATE APPLICATION UNDER THE PROJECT BUILDING CODE. SUBSTITUTION REQUESTS SHALL INCLUDE CALCULATIONS PREPARED & SEALED BY A REGISTERED PROFESSIONAL ENGINEER THAT DEMONSTRATE THE SUBSTITUTED PRODUCT IS CAPABLE OF ACHIEVING THE EQUIVALENT.ADHESIVE ANCHOR EVALUATION WILL ALSO CONSIDER CREEP, IN-SERVICE TEMPERATURE AND INSTALLATION TEMPERATURE.

8.7 INSTALL ANCHORS PER THE MANUFACTURER PRINTED INSTRUCTIONS, OR AS INCLUDED IN THE ANCHOR PACKAGING.

8.8 OVERHEAD ADHESIVE ANCHORS MUST BE INSTALLED USING THE MANUFACTURER INSTRUCTIONS.

8.9 THE CONTRACTOR SHALL ARRANGE AN ANCHOR MANUFACTURER'S REPRESENTATIVE TO PROVIDE ONSITE INSTALLATION TRAINING FOR ALL OF THEIR ANCHORING PRODUCTS SPECIFIED. THE STRUCTURAL ENGINEER OF RECORD MUST RECEIVE DOCUMENTED CONFIRMATION THAT ALL OF THE CONTRACTOR'S PERSONNEL WHO INSTALL ANCHORS ARE TRAINED PRIOR TO THE COMMENCEMENT OF INSTALLING ANCHORS.

8.10 ANCHOR CAPACITY IS DEPENDANT UPON SPACING BETWEEN ADJACENT ANCHORS AND PROXIMITY OF ANCHORS TO EDGE OF CONCRETE. INSTALL ANCHORS IN ACCORDANCE WITH SPACING AND EDGE CLEARANCES INDICATED ON THE DRAWINGS.

8.11 EXISTING REINFORCING BARS AND/OR CONDUIT IN THE CONCRETE STRUCTURE MAY CONFLICT WITH SPECIFIC ANCHOR LOCATIONS. CARE SHALL BE TAKEN IN PLACING POST-INSTALLED ANCHORS AND/OR REINFORCING TO AVOID CONFLICTS WITH EXISTING REBAR AND/OR CONDUIT. UNLESS NOTED ON THE DRAWINGS THAT THE BARS CAN BE CUT, THE CONTRACTOR SHALL REVIEW THE EXISTING STRUCTURAL DRAWINGS AND SHALL UNDERTAKE TO LOCATE THE POSITION OF THE REINFORCING BARS AT THE LOCATIONS OF THE CONCRETE ANCHORS, BY HILTI FERROSCAN, GPR, X-RAY, CHIPPING OR OTHER MEANS.

9.0 PREFABRICATED CANOPY

9.1 PROTECTIVE COVER WALKWAYS AND PREFABRICATED CANOPIES SHALL BE CONSIDERED A DEFERRED SUBMITTAL TO THE BUILDING INSPECTION AGENCY.

9.2 PROTECTIVE COVER WALKWAYS AND PREFABRICATED CANOPIES SHALL BE FULLY ENGINEERED BY THE CANOPY MANUFACTURER AND CONTRACTOR UNDER THE DIRECT SUPERVISION OF A PROFESSIONAL ENGINEER REGISTERED IN THE STATE THE PROJECT IS LOCATED.

9.3 CALCULATIONS SHALL ACCOMPANY THE SHOP DRAWINGS AND SHALL INCLUDE DESIGN FOR ALL MEMBERS OF THE CANOPY, INCLUDING FOOTINGS AND ATTACHMENT TO STRUCTURE.

9.4 PROTECTIVE COVER WALKWAY AND PREFABRICATED CANOPY SHOP DRAWINGS SHALL BE SUBMITTED TO INCLUDE A FULL DESCRIPTION OF ALL CANOPY MEMBERS, INCLUDING COLUMNS, BEAMS, FOOTINGS, FACIA, ETC. SHOP DRAWINGS SHALL BEAR THE SEAL OF THE PROFESSIONAL ENGINEER.

SDG
STRUCTURAL DESIGN GROUP
300 Chase Park South, Suite 125
Hoover, AL 35244
tel 205-824-5200
fax 205-824-5280
Job Number 22-001

LATHAN ARCHITECTS
LATHAN • BRYANT • CALMA

NEW JROTC FACILITY FOR
PLEASANT GROVE HIGH SCHOOL
100 SPARTAN DRIVE, PLEASANT GROVE, AL 35127
JEFFERSON COUNTY BOARD OF EDUCATION

ALABAMA REGISTERED No. 22596 PROFESSIONAL ENGINEER CRAIG WINN
H. Craig Winn, P.E.
2-1-2022

SHEET TITLE:
GENERAL NOTES CONTINUED

PROJ. MGR.:	HCW
DRAWN:	ABS
DATE:	FEBRUARY 1, 2022
REVISIONS	

JOB NO. 21-66

SHEET NO:
S1.1
2 OF 10

0 1" 2"

SDG
STRUCTURAL DESIGN GROUP
300 Chase Park South, Suite 125
Hoover, AL 35244
tel 205-824-5200
fax 205-824-5280
Job Number 22-001

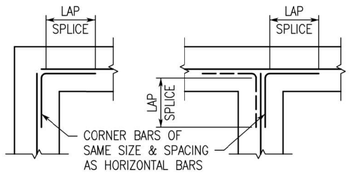

SINGLE LAYER REINFORCEMENT

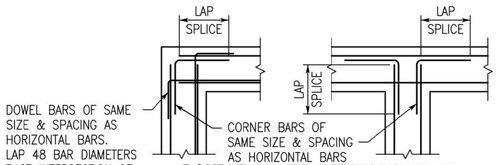

DOUBLE LAYER REINFORCEMENT

NOTE: ALL LAP SPLICES CLASS "B" TENSION

FOUNDATION AND WALL CORNER REINFORCING DETAIL
TYPICAL

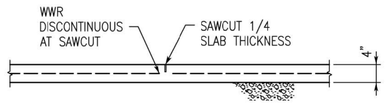

SAWED JOINT

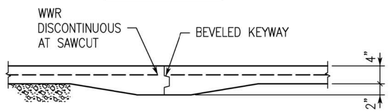

KEYED JOINT

4" SLAB CONTROL JOINT DETAILS
TYPICAL
JOINT TYPE IS OPTIONAL
IF NO JOINTS SPECIFIED, PROVIDE AT 16' ON CENTER EACH WAY

NOTE:
CONTRACTOR COORDINATE W/ARCHITECT FOR ALL DEPRESSED SLAB AREAS BEFORE SLAB ON GRADE IS PLACED.

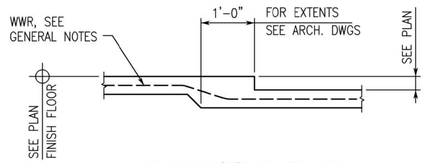

DEPRESSED SLAB ON GRADE DETAIL
TYPICAL

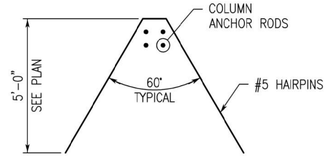

NOTE: HAIRPIN TO BE ONE CONTINUOUS PIECE

COLUMN HAIRPIN DETAIL
TYPICAL

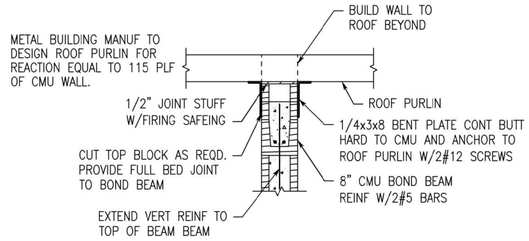

WALL PERPENDICULAR TO ROOF PURLINS

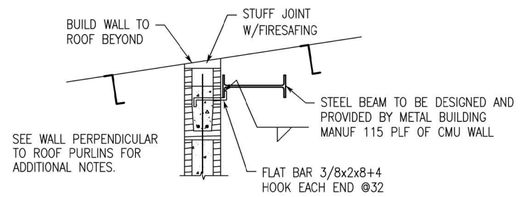

WALL PARALLEL TO PURLINS

MASONRY WALL SUPPORT AT ROOF
TYPICAL

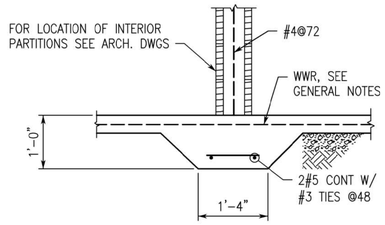

INTERIOR CMU WALL ON THICKENED SLAB ON GRADE DETAIL
TYPICAL

MASONRY LINTEL SCHEDULE

MAXIMUM OPENING WIDTH	STEEL FOR EACH 4" OF WALL THICKNESS	LINTEL DIMENSIONS AND REINFORCING	
		DEPTH	8" WALL
2'-0"	L3 1/2x3 1/2x3/8	8	1#4 BOT
4'-0"	L3 1/2x3 1/2x3/8	8	1#4 BOT
6'-0"	L3 1/2x3 1/2x3/8	8	1#5 BOT & 1#4 TOP
8'-0"	L5x3 1/2x3/8	16	1#6 BOT & 1#5 TOP

1. DO NOT USE THIS SCHEDULE IF CONCENTRATED LOAD IS APPLIED TO THE LINTEL AT A HEIGHT LESS THAN HALF THE SPAN ABOVE THE LINTEL, OR IF STACK BOND IS SPECIFIED.
2. PROVIDE 8" MINIMUM BEARING FOR ALL LINTELS. FOR LINTELS GREATER THAN 6'-0" FILL CELLS SOLID AT EACH SIDE OF OPENING.
3. ALL EXPOSED LINTEL ANGLES TO BE HOT DIP GALVANIZED.
4. SHORE LINTEL UNTIL MORTAR AND GROUT HAVE SET AND CURED.

LATHAN ARCHITECTS
LATHAN • BRYANT • CALMA

NEW JROTC FACILITY FOR PLEASANT GROVE HIGH SCHOOL
100 SPARTAN DRIVE, PLEASANT GROVE, AL 35127
JEFFERSON COUNTY BOARD OF EDUCATION

ALABAMA REGISTERED No. 22596 PROFESSIONAL ENGINEER CRAIG
H. Craig Wilson, P.E.
2-1-2022

SHEET TITLE:
TYPICAL DETAILS

PROJ. MGR.:	HCW
DRAWN:	ABS
DATE:	FEBRUARY 1, 2022
REVISIONS	

JOB NO. 21-66
SHEET NO:
S1.2
3 OF 10
0 1" 2"

SDG
STRUCTURAL DESIGN GROUP
300 Chase Park South, Suite 125
Hoover, AL 35244
tel 205-824-5200
fax 205-824-5280
Job Number 22-001

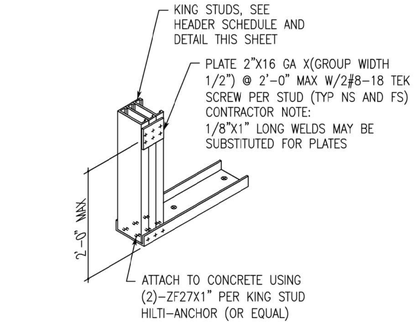

KING STUD GROUP CONNECTION
TYPICAL

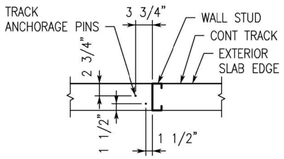

PIN PLACEMENT PLAN

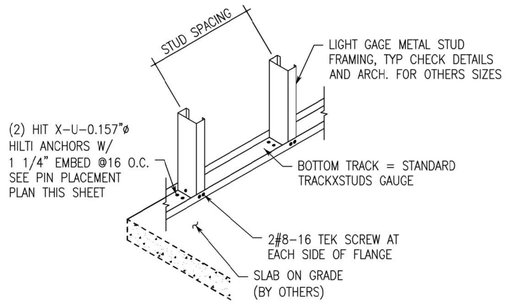

SLAB CONNECTION DETAIL
TYPICAL

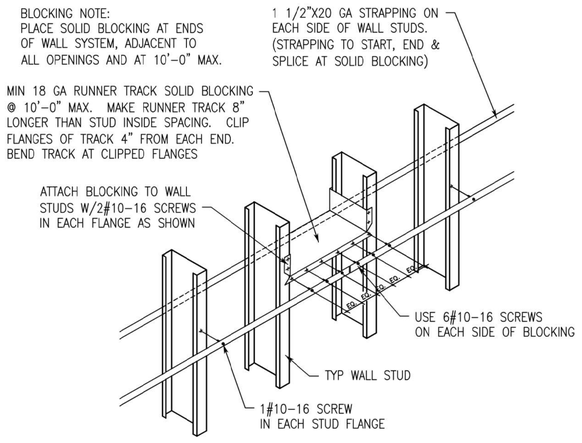

STRAP BRIDGING LATERAL BRACING
TYPICAL

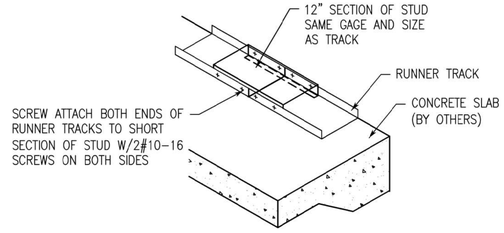

BOTTOM TRACK SPLICE
TYPICAL

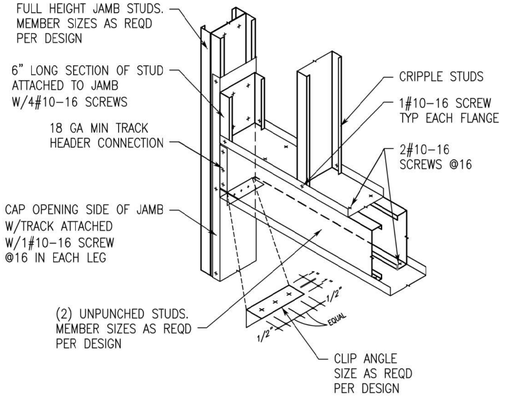

BOX HEADER
TYPICAL

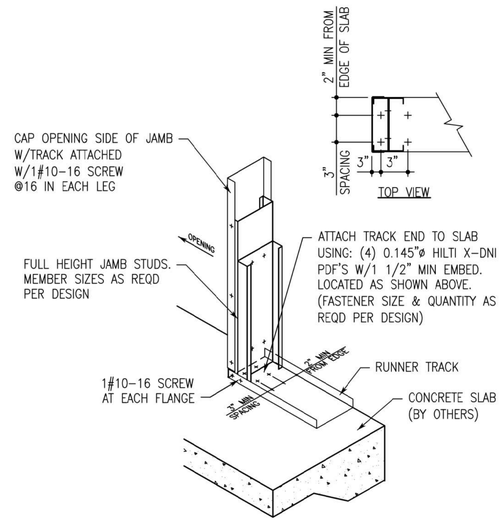

DOOR JAMB ANCHORAGE
TYPICAL

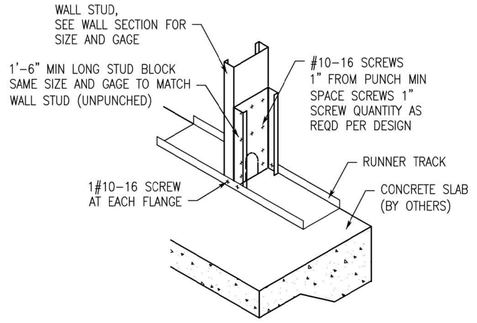

NOTE:
WHERE FIELD CUTS CAUSE PUNCHOUT TO OCCUR AT STUD/RUNNER INTERSECTION REINFORCE STUD AS SHOWN FOR SCREW ATTACHMENT.

REINFORCEMENT AT STUD END
TYPICAL

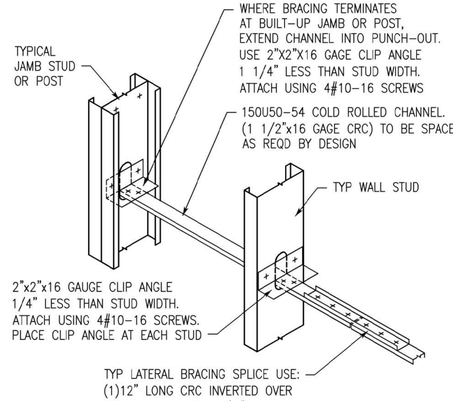

THIS DETAIL IS NOT RECOMMENDED FOR WALL STUDS DEEPER THAN 8"

STUD BRIDGING WITH BRIDGING CLIP
TYPICAL

LATHAN ARCHITECTS
LATHAN • BRYANT • CALMA

NEW JROTC FACILITY FOR PLEASANT GROVE HIGH SCHOOL
100 SPARTAN DRIVE, PLEASANT GROVE, AL 35127
JEFFERSON COUNTY BOARD OF EDUCATION

ALABAMA REGISTERED No. 22596 PROFESSIONAL ENGINEER H. CRAIG WINN
H. Craig Winn, P.E.
2-1-2022

SHEET TITLE:
TYPICAL DETAILS

PROJ. MGR.:	HCW
DRAWN:	ABS
DATE:	FEBRUARY 1, 2022
REVISIONS	

JOB NO. 21-66
SHEET NO:
S1.3
4 OF 10
0 1" 2"

SDG
STRUCTURAL DESIGN GROUP
300 Chase Park South, Suite 125
Hoover, AL 35244
tel 205-824-5200
fax 205-824-5280
Job Number 22-001

TENSION LAP SPLICE LENGTHS

BAR SIZE	f_C= 3000 PSI				f_C= 4000 PSI			
	TOP BARS		OTHER BARS		TOP BARS		OTHER BARS	
	A	B	A	B	A	B	A	B
#3	22"	28"	17"	22"	19"	24"	15"	19"
#4	29"	37"	22"	29"	25"	32"	19"	25"
#5	36"	47"	28"	36"	31"	40"	24"	31"
#6	43"	56"	33"	43"	37"	48"	29"	37"
#7	63"	81"	48"	63"	54"	70"	42"	54"
#8	72"	93"	55"	72"	62"	80"	48"	62"
#9	81"	105"	62"	81"	70"	91"	54"	70"
#10	91"	118"	70"	91"	79"	102"	61"	79"
#11	101"	131"	78"	101"	87"	113"	67"	87"

TOP BARS ARE HORIZONTAL REINFORCEMENT WITH MORE THAN 12" OF CONCRETE CAST BELOW THE REINFORCEMENT.

ANCHOR ROD EMBEDMENT LENGTHS

BOLT DIA	MIN EMBEDMENT
3/4"	9"
1"	12"
1 1/4"	15"
1 1/2"	18"

NOTE:
ANCHOR ROD SIZE AND MATERIAL TO BE PROVIDED BY METAL BUILDING MANUFACTURER. THE ABOVE TABLE IS MINIMUM EMBEDMENT TO FULLY DEVELOP ASTM F1554 GRADE 36 HEADED ANCHOR RODS. FINAL ANCHOR ROD EMBEDMENT DEPTH SHALL BE DETERMINED BY STRUCTURAL ENGINEER AFTER SUBMITTAL OF COLUMN BASE AND ANCHOR ROD INFORMATION FROM METAL BUILDING MANUFACTURER PRIOR TO MATERIAL ORDER AND FABRICATION.

COMPONENTS AND CLADDING WIND LOADS FOR WALLS (PSF)

H = 19'-0"	EFFECTIVE WIND AREA (FT2)	120 MPH ULTIMATE DESIGN WIND SPEED	
INT. ZONE	10	33.0	-35.8
	20	31.5	-34.3
	50	29.6	-32.4
	100	28.1	-30.9
	200	26.6	-29.4
	500	24.7	-27.4
EDGE ZONE	10	33.0	-44.2
	20	31.5	-41.2
	50	29.6	-37.3
	100	28.1	-34.3
	200	26.6	-31.4
	500	24.7	-27.4

NOTES:
1. WIDTH OF EDGE STRIP, a = 6'-0".
2. VALUES SHOWN ABOVE HAVE BEEN ADJUSTED FOR BUILDING HEIGHT AND EXPOSURE ACCORDING TO ASCE7-10 STANDARD TABLE 30.3-1 AND IMPORTANCE FACTOR.
3. PLUS AND MINUS SIGNS SIGNIFY PRESSURES ACTING TOWARD AND AWAY FROM THE BUILDING SURFACES.
4. EFFECTIVE WIND AREA IS THE SPAN LENGTH MULTIPLIED BY AN EFFECTIVE WIDTH THAT NEED NOT BE LESS THAN ONE-THIRD THE SPAN LENGTH.
5. WIND PRESSURES IN THESE TABLES SHALL BE MULTIPLIED BY 0.6 TO OBTAIN NOMINAL WIND PRESSURES.

COMPONENTS AND CLADDING WIND LOADS FOR ROOF (PSF)

H = 19'-0" 2:12 Roof Slope	EFFECTIVE WIND AREA (FT2)	120 MPH ULTIMATE DESIGN WIND SPEED	
INT. ZONE	10	19.1	-30.2
	20	17.4	-29.4
	50	16.0	-28.3
	100	16.0	-27.4
	200	16.0	-27.4
	500	16.0	-27.4
EDGE ZONE	10	19.1	-52.6
	20	17.4	-48.4
	50	16.0	-42.8
	100	16.0	-38.6
	200	16.0	-38.6
	500	16.0	-38.6
CORNER ZONE	10	19.1	-77.8
	20	17.4	-72.7
	50	16.0	-66.0
	100	16.0	-61.0
	200	16.0	-61.0
	500	16.0	-61.0

NOTES:
1. WIDTH OF EDGE STRIP, a = 6'-0".
2. VALUES SHOWN ABOVE HAVE BEEN ADJUSTED FOR BUILDING HEIGHT AND EXPOSURE ACCORDING TO ASCE 7-10 STANDARD TABLE 30.3-1 AND IMPORTANCE FACTOR.
3. PLUS AND MINUS SIGNS SIGNIFY PRESSURES ACTING TOWARD AND AWAY FROM THE BUILDING SURFACES.
4. EFFECTIVE WIND AREA IS THE SPAN LENGTH MULTIPLIED BY AN EFFECTIVE WIDTH THAT NEED NOT BE LESS THAN ONE-THIRD THE SPAN LENGTH.
5. METAL BUILDING MANUFACTURER RESPONSIBLE FOR CALCULATING WIND UPLIFT PRESSURES AND MINIMUM DEAD LOADS FOR METAL BUILDING COMPONENTS AND CLADDING.
6. WIND PRESSURES IN THESE TABLES SHALL BE MULTIPLIED BY 0.6 TO OBTAIN NOMINAL WIND PRESSURES.

METAL BUILDING COLUMN REACTIONS (KIPS)

COLUMN DESIGNATION	DEAD		COLLATERAL		ROOF LIVE		WIND EW		WIND NS		EQ EW		EQ NS	
	H	V	H	V	H	V	H	V	H	V	H	V	H	V
A2, A3, D2, D3	-3.4	7.6	-3.4	7.6	-4.0	9.1	+-12.0	+2.1/-19.1	+-7.9	+-5.1	+-1.9	+-1.0	+-1.9	+-1.0
A4, D4	-3.4	7.6	-3.4	7.6	-4.0	9.1	+-12.0	+2.1/-19.1	-	-	+-1.9	+-1.0	+-1.9	+-1.0
A1, A6, D1, D6	-1.7	3.8	-1.7	3.8	-2.0	4.6	+-6.0	+1.1/-9.6	-	-	+-1.0	+-0.5	+-1.0	+-0.5
B1, B6, C1, C6	-2.2	4.8	-2.2	4.8	-1.7	3.9	+-3.5	+1.6/-3.6	-	-	+-0.5	+-0.3	-	-

NOTES:
1. BEFORE INSTALLATION OF FOUNDATIONS, METAL BUILDINGS SUPPLIER SHALL SUBMIT DESIGN LOADS AND COLUMN REACTIONS TO THE ARCHITECT/ENGINEER FOR REVIEW. THE CURRENT FOUNDATION DESIGN HAS BEEN BASED ON PRELIMINARY METAL BUILDING REACTIONS GENERATED BY STRUCTURAL DESIGN GROUP AND SHOWN IN THE TYPICAL DETAILS. THIS MAY REQUIRE ADJUSTMENTS TO THE FOUNDATION SIZES AFTER REVIEW OF THE FINAL METAL BUILDING COLUMN REACTIONS.
2. POSITIVE AND NEGATIVE AXIAL FORCES (V) INDICATE FORCES ACTING TO AND AWAY FROM THE STRUCTURE, RESPECTIVELY. POSITIVE AND NEGATIVE SHEAR (H) INDICATE FORCES ACTING TOWARD AND AWAY FROM THE CENTER OF THE BUILDING, RESPECTIVELY.
3. LATERAL FORCES SHOWN ARE ULTIMATE LEVEL FORCES.

PIPING WEIGHTS

PIPE DIAMETER	PIPE WT PER/FOOT (PLF)	FLUID WT PER/FOOT (PLF)	INSULATION & HANGERS (PLF)	TOTAL WT PER/FOOT (PLF)
4"	10.80	6.10	2.00	18.90
6"	19.00	13.80	3.00	35.80
8"	28.60	23.90	4.00	56.50
10"	40.50	37.50	4.00	82.00
12"	49.60	54.00	5.00	108.60
14"	54.60	65.70	5.00	125.30
16"	62.60	87.10	5.00	154.70

NOTES:
1. FROM ANVIL INTERNATIONAL PIPE FITTERS HANDBOOK.
2. ALL PIPES ASSUMED TO BE SCHEDULE 40.
3. FLUID WEIGHT INCLUDES ALLOWANCE FOR GLYCOL CONCENTRATION.
4. PIPING SUPPORT AND THRUST BRACING REQUIREMENTS SHALL BE COORDINATED BY THE GENERAL CONTRACTOR WITH THE STEEL/JOIST FABRICATOR. SEE MECHANICAL/PLUMBING DRAWINGS FOR PIPING SUPPORT AND THRUST BRACING REQUIREMENTS.
5. FOR PIPE SIZES NOT LISTED, CONTACT STRUCTURAL ENGINEER.

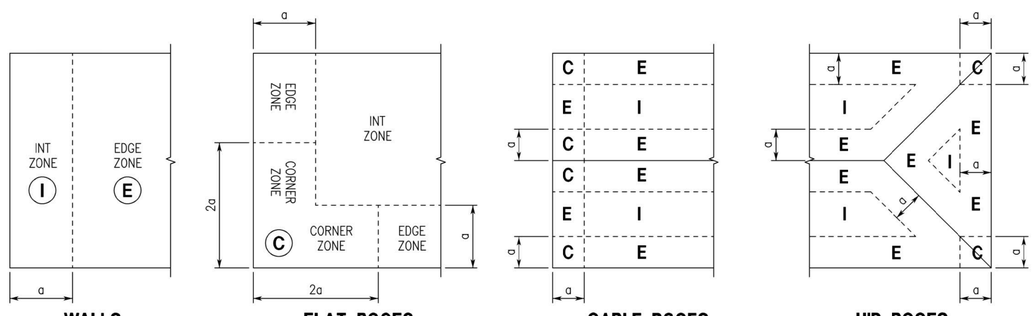

WALL AND ROOF WIND PRESSURE ZONE DIAGRAMS
TYPICAL

FOOTING SCHEDULE

FOOTING DESIGNATION		F4.0	F6.0	F8.0
FOOTING	SIZE (LxW)	4'-0"x4'-0"	6'-0"x6'-0"	8'-0"x8'-0"
	DEPTH (D)	1'-0"	2'-0"	2'-0"
	REINF EW (BOT)	4#5	6#6	8#6
	NOTES	1	1	1

NOTES:
1. PROVIDE SCHEDULED REINFORCEMENT ON TOP AND BOTTOM OF FOOTING.

LATHAN ARCHITECTS
LATHAN • BRYANT • CALMA

NEW JROTC FACILITY FOR PLEASANT GROVE HIGH SCHOOL
100 SPARTAN DRIVE, PLEASANT GROVE, AL 35127
JEFFERSON COUNTY BOARD OF EDUCATION

ALABAMA REGISTERED No. 22596 PROFESSIONAL ENGINEER H. CRAIG WINN
H. Craig Winn P.E.
2-1-2022

SHEET TITLE:
TYPICAL DETAILS

PROJ. MGR.:	HCW
DRAWN:	ABS
DATE:	FEBRUARY 1, 2022
REVISIONS	

JOB NO. 21-66
SHEET NO:
S1.4
5 OF 10
0 1" 2"

SDG
STRUCTURAL DESIGN GROUP
300 Chase Park South, Suite 125
Hoover, AL 35244
tel 205-824-5200
fax 205-824-5280
Job Number 22-001

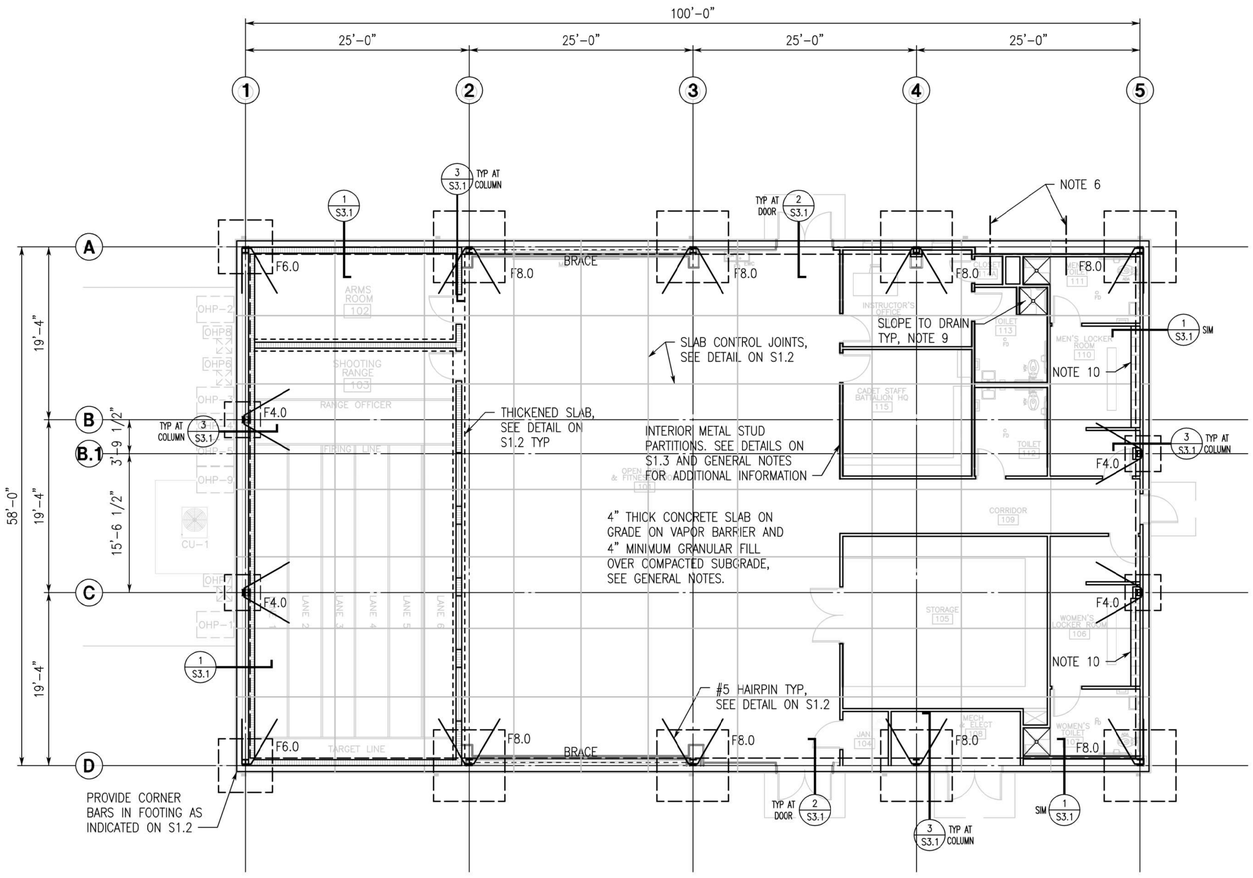

PROJECT NORTH

FOUNDATION PLAN

1/8"=1'-0"

1. FINISH FLOOR (TOP OF SLAB) ELEVATION 0'-0", UNLESS NOTED.
2. TOP OF FOOTING ELEVATION -2'-0", UNLESS NOTED.
3. FOR SLAB ON GRADE CONSTRUCTION, SEE GENERAL NOTES AND TYPICAL DETAILS.
4. FOR SLAB RECESS LOCATIONS, SEE ARCHITECTURAL DRAWINGS.
5. GENERAL CONTRACTOR SHALL COORDINATE TILE JOINT LOCATIONS WITH CONTROL JOINTS.
6. PLUMBING LINES CROSSING A FOOTING SHALL BE A MINIMUM OF 1'-0" FROM BOTTOM OF FOOTING TO TOP OF PIPE. COORDINATE ELEVATIONS WITH PLUMBING AND CIVIL ENGINEER.
7. 'FX.X' INDICATES FOOTING DESIGNATION. SEE FOOTING SCHEDULE ON S1.4 FOR ADDITIONAL INFORMATION.
8. THE MAIN BUILDING IS A PRE-ENGINEERED METAL BUILDING. SEE GENERAL NOTES ON S1.0 AND S1.1 FOR ADDITIONAL INFORMATION.
9. SLOPE SLAB TO DRAINS AS REQUIRED. SEE ARCHITECTURAL AND PLUMBING DRAWINGS.
10. PROVIDE 4" CONCRETE CURB REINFORCED WITH 2#4 LW AND #4@12 SW. CHAIR REINFORCEMENT MID HEIGHT OF CURB.

LATHAN
ARCHITECTS
LATHAN • BRYANT • CALMA

NEW JROTC FACILITY FOR
PLEASANT GROVE HIGH SCHOOL
100 SPARTAN DRIVE, PLEASANT GROVE, AL 35127
JEFFERSON COUNTY BOARD OF EDUCATION

ALABAMA REGISTERED No. 22596 PROFESSIONAL ENGINEER H. Craig Wilson, P.E.
2-1-2022

SHEET TITLE:
FOUNDATION PLAN

PROJ. MGR.:	HCW
DRAWN:	ABS
DATE:	FEBRUARY 1, 2022
REVISIONS	

JOB NO. 21-66

SHEET NO:
S2.1
6 OF 10

0 1" 2"

SDG
STRUCTURAL DESIGN GROUP
300 Chase Park South, Suite 125
Hoover, AL 35244
tel 205-824-5200
fax 205-824-5280
Job Number 22-001

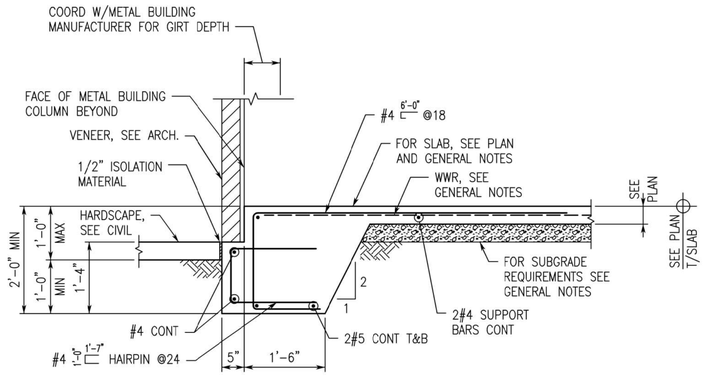

SECTION 1/S2.1b
3/4"=1'-0"

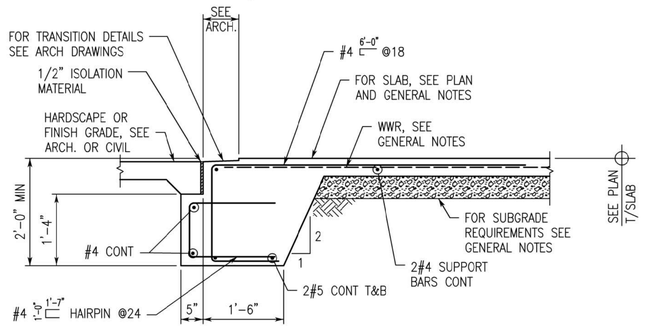

SECTION 2/S2.1b
3/4"=1'-0"

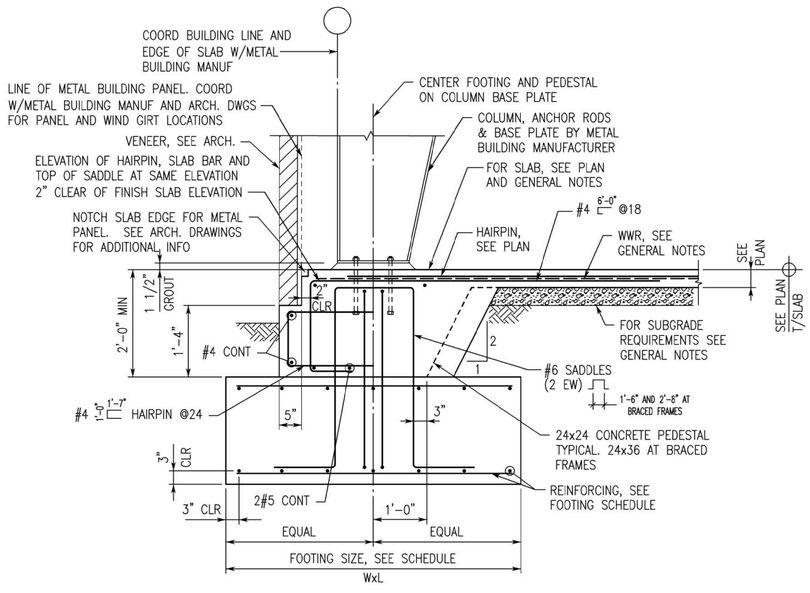

SECTION 3/S2.1b
3/4"=1'-0"

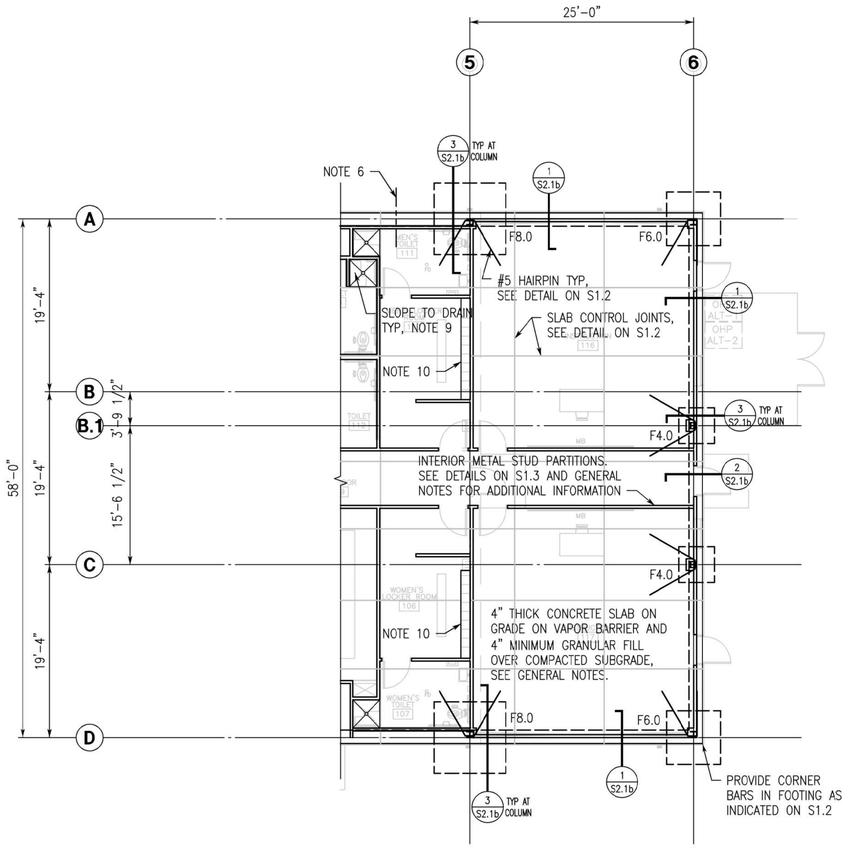

PROJECT NORTH

FOUNDATION PLAN - ALTERNATE
1/8"=1'-0"

1. FINISH FLOOR (TOP OF SLAB) ELEVATION 0'-0", UNLESS NOTED.
2. TOP OF FOOTING ELEVATION -2'-0", UNLESS NOTED.
3. FOR SLAB ON GRADE CONSTRUCTION, SEE GENERAL NOTES AND TYPICAL DETAILS.
4. FOR SLAB RECESS LOCATIONS, SEE ARCHITECTURAL DRAWINGS.
5. GENERAL CONTRACTOR SHALL COORDINATE TILE JOINT LOCATIONS WITH CONTROL JOINTS.
6. PLUMBING LINES CROSSING A FOOTING SHALL BE A MINIMUM OF 1'-0" FROM BOTTOM OF FOOTING TO TOP OF PIPE. COORDINATE ELEVATIONS WITH PLUMBING AND CIVIL ENGINEER.
7. 'FX.X' INDICATES FOOTING DESIGNATION. SEE FOOTING SCHEDULE ON S1.4 FOR ADDITIONAL INFORMATION.
8. THE MAIN BUILDING IS A PRE-ENGINEERED METAL BUILDING. SEE GENERAL NOTES ON S1.0 AND S1.1 FOR ADDITIONAL INFORMATION.
9. SLOPE SLAB TO DRAINS AS REQUIRED. SEE ARCHITECTURAL AND PLUMBING DRAWINGS.
10. PROVIDE 4" CONCRETE CURB REINFORCED WITH 2#4 LW AND #4@12 SW. CHAIR REINFORCEMENT MID HEIGHT OF CURB.

LATHAN
ARCHITECTS
LATHAN • BRYANT • CALMA

NEW JROTC FACILITY FOR
PLEASANT GROVE HIGH SCHOOL
100 SPARTAN DRIVE, PLEASANT GROVE, AL 35127
JEFFERSON COUNTY BOARD OF EDUCATION

ALABAMA REGISTERED PROFESSIONAL ENGINEER
No. 22596
H. CRAIG WINN P.E.
2-1-2022

SHEET TITLE:
ALTERNATE FOUNDATION PLAN

PROJ. MGR.:	HCW
DRAWN:	ABS
DATE:	FEBRUARY 1, 2022
REVISIONS	

JOB NO. 21-66
SHEET NO:
S2.1b
8 OF 10
0 1" 2"

SDG
STRUCTURAL DESIGN GROUP
300 Chase Park South, Suite 125
Hoover, AL 35244
tel 205-824-5200
fax 205-824-5280
Job Number 22-001

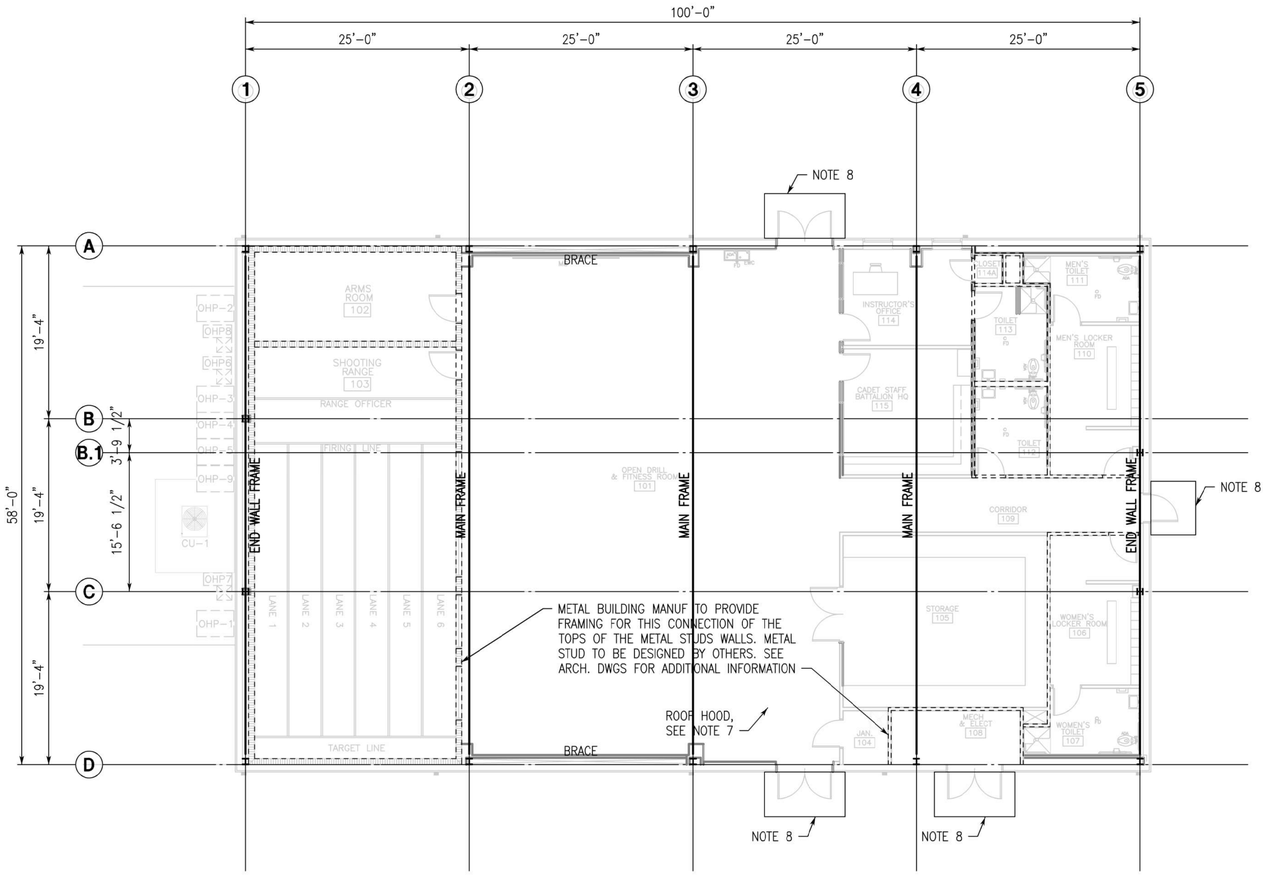

PROJECT NORTH

ROOF FRAMING PLAN

1/8"=1'-0"

1. ROOF SYSTEM: PREFABRICATED METAL BUILDING FRAMES WITH PURLINS SUPPORTING STANDING SEAM METAL ROOFING.
2. EXTEND METAL STUD FRAMING TO ROOF AS INDICATED ON ARCHITECTURAL DRAWINGS. CONTRACTOR COORDINATE WALL BRACING WITH METAL STUD PROVIDER.
3. METAL BUILDING MANUFACTURER TO USE FRAME LINES AS INDICATED. WHERE THIS IS NOT FEASIBLE THE METAL BUILDING SHOP DRAWINGS SHOULD CLEARLY DESIGNATE ANY DEVIATIONS. ARCHITECT MUST APPROVE ANY CHANGES MADE TO FRAME LAYOUT PRIOR TO FABRICATION.
4. LOCATIONS OF PORTAL AND BRACED FRAMES FOR LATERAL STABILITY OF THE STRUCTURE TO BE AS DIRECTED BY THE METAL BUILDING MANUFACTURER. EVERY EFFORT SHOULD BE MADE TO COORDINATE FRAMES WITH EXISTING ARCHITECTURE. LOCATIONS AND SIZE OF FRAME ELEMENTS SHOULD BE CLEARLY DEFINED ON SHOP DRAWINGS SUBMITTED FOR APPROVAL.
5. HANGER LOCATIONS FOR PIPING LARGER THAN 3 INCHES IN DIAMETER MUST BE COORDINATED BY GENERAL CONTRACTOR WITH THE METAL BUILDING MANUFACTURER. FOR PIPING WEIGHTS, SEE TABLE ON SHEET S1.4.
6. CONTRACTOR COORDINATE SPRINKLER PIPING LOADS WITH METAL BUILDING MANUFACTURER. FOR PIPING WEIGHTS, SEE TABLE ON SHEET S1.4. PIPING WILL RESULT IN A CONCENTRATED LOAD AT HANGER LOCATIONS. COORDINATE MAXIMUM HANGER SPACING WITH METAL BUILDING MANUFACTURER.
7. WHERE ROOF SUPPORTED/SUSPENDED MECHANICAL UNITS ARE LOCATED THE CONTRACTOR SHALL COORDINATE ALL LOADING, CURB SUPPORTS, OPENING FRAMING AND ANY ADDITIONAL SUPPORT REQUIREMENTS WITH THE METAL BUILDING MANUFACTURER. THE METAL BUILDING MANUFACTURER SHALL PROVIDE ALL FRAMING AS REQUIRED TO SUPPORT THE MECHANICAL UNIT AND CURBS AT LOCATIONS SHOWN. PROVIDE ADDITIONAL FRAMING AS NECESSARY TO FRAME RTU BETWEEN MAIN FRAMES AS SHOWN.
8. PROVIDE PREFABRICATED CANOPY AT LOCATIONS SHOWN AND AS DIRECTED ON ARCHITECTURAL DRAWINGS. CONTRACTOR PROVIDE LOCATION, ELEVATION AND WIND LOADS TO METAL BUILDING MANUFACTURER. CONTRACTOR PROVIDE DESIGN FOR CANOPIES AND ATTACHMENT TO STRUCTURE AND PROVIDE DRAWINGS AND CALCULATIONS SEALED BY A PROFESSIONAL ENGINEER REGISTERED IN THE STATE OF ALABAMA, SEE GENERAL NOTES.

LATHAN ARCHITECTS
LATHAN • BRYANT • CALMA

NEW JROTC FACILITY FOR PLEASANT GROVE HIGH SCHOOL
100 SPARTAN DRIVE, PLEASANT GROVE, AL 35127
JEFFERSON COUNTY BOARD OF EDUCATION

ALABAMA REGISTERED No. 22598 PROFESSIONAL ENGINEER H. CRAIG WINN
H. Craig Winn, P.E.
2-1-2022

SHEET TITLE:
ROOF FRAMING PLAN

PROJ. MGR.:	HCW
DRAWN:	ABS
DATE:	FEBRUARY 1, 2022
REVISIONS	

JOB NO. 21-66
SHEET NO:
S2.2
7 OF 10
0 1" 2"

SDG
STRUCTURAL DESIGN GROUP
300 Chase Park South, Suite 125
Hoover, AL 35244
tel 205-824-5200
fax 205-824-5280
Job Number 22-001

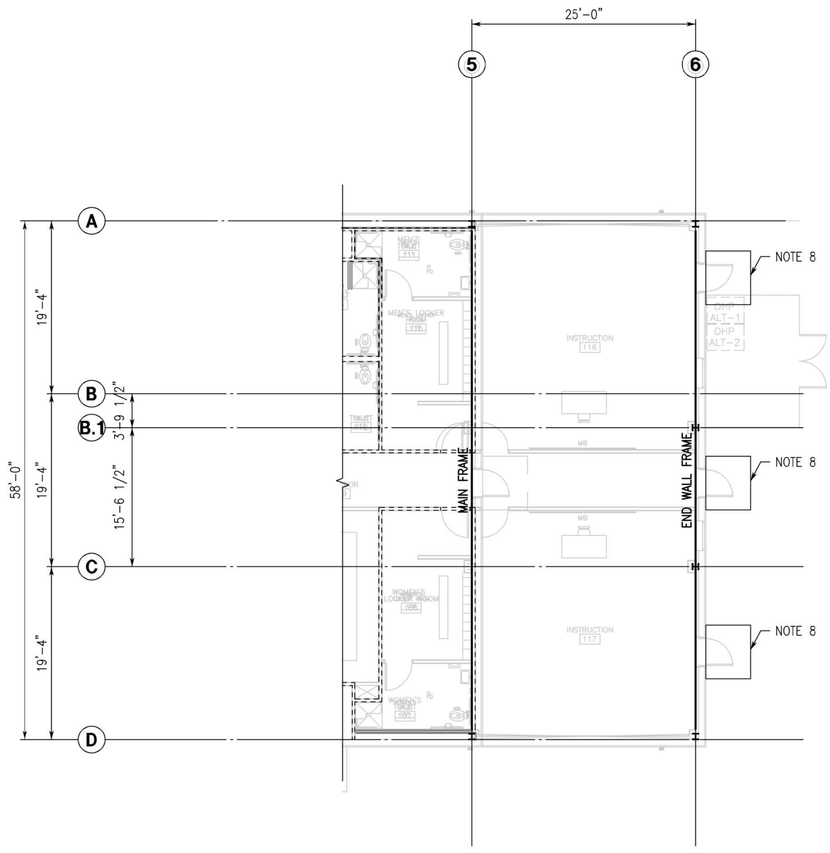

PROJECT NORTH

ROOF FRAMING PLAN - ALTERNATE

1/8"=1'-0"

1. ROOF SYSTEM: PREFABRICATED METAL BUILDING FRAMES WITH PURLINS SUPPORTING STANDING SEAM METAL ROOFING.
2. EXTEND METAL STUD FRAMING TO ROOF AS INDICATED ON ARCHITECTURAL DRAWINGS. CONTRACTOR COORDINATE WALL BRACING WITH METAL STUD PROVIDER.
3. METAL BUILDING MANUFACTURER TO USE FRAME LINES AS INDICATED. WHERE THIS IS NOT FEASIBLE THE METAL BUILDING SHOP DRAWINGS SHOULD CLEARLY DESIGNATE ANY DEVIATIONS. ARCHITECT MUST APPROVE ANY CHANGES MADE TO FRAME LAYOUT PRIOR TO FABRICATION.
4. LOCATIONS OF PORTAL AND BRACED FRAMES FOR LATERAL STABILITY OF THE STRUCTURE TO BE AS DIRECTED BY THE METAL BUILDING MANUFACTURER. EVERY EFFORT SHOULD BE MADE TO COORDINATE FRAMES WITH EXISTING ARCHITECTURE. LOCATIONS AND SIZE OF FRAME ELEMENTS SHOULD BE CLEARLY DEFINED ON SHOP DRAWINGS SUBMITTED FOR APPROVAL.
5. HANGER LOCATIONS FOR PIPING LARGER THAN 3 INCHES IN DIAMETER MUST BE COORDINATED BY GENERAL CONTRACTOR WITH THE METAL BUILDING MANUFACTURER. FOR PIPING WEIGHTS, SEE TABLE ON SHEET S1.4.
6. CONTRACTOR COORDINATE SPRINKLER PIPING LOADS WITH METAL BUILDING MANUFACTURER. FOR PIPING WEIGHTS, SEE TABLE ON SHEET S1.4. PIPING WILL RESULT IN A CONCENTRATED LOAD AT HANGER LOCATIONS. COORDINATE MAXIMUM HANGER SPACING WITH METAL BUILDING MANUFACTURER.
7. WHERE ROOF SUPPORTED/SUSPENDED MECHANICAL UNITS ARE LOCATED THE CONTRACTOR SHALL COORDINATE ALL LOADING, CURB SUPPORTS, OPENING FRAMING AND ANY ADDITIONAL SUPPORT REQUIREMENTS WITH THE METAL BUILDING MANUFACTURER. THE METAL BUILDING MANUFACTURER SHALL PROVIDE ALL FRAMING AS REQUIRED TO SUPPORT THE MECHANICAL UNIT AND CURBS AT LOCATIONS SHOWN. PROVIDE ADDITIONAL FRAMING AS NECESSARY TO FRAME RTU BETWEEN MAIN FRAMES AS SHOWN.
8. PROVIDE PREFABRICATED CANOPY AT LOCATIONS SHOWN AND AS DIRECTED ON ARCHITECTURAL DRAWINGS. CONTRACTOR PROVIDE LOCATION, ELEVATION AND WIND LOADS TO METAL BUILDING MANUFACTURER. CONTRACTOR PROVIDE DESIGN FOR CANOPIES AND ATTACHMENT TO STRUCTURE AND PROVIDE DRAWINGS AND CALCULATIONS SEALED BY A PROFESSIONAL ENGINEER REGISTERED IN THE STATE OF ALABAMA, SEE GENERAL NOTES.

LATHAN
ARCHITECTS
LATHAN • BRYANT • CALMA

NEW JROTC FACILITY FOR
PLEASANT GROVE HIGH SCHOOL
100 SPARTAN DRIVE, PLEASANT GROVE, AL 35127
JEFFERSON COUNTY BOARD OF EDUCATION

ALABAMA REGISTERED No. 22596 PROFESSIONAL ENGINEER H. CRAIG WINN
H. Craig Winn, P.E.
2-1-2022

SHEET TITLE:
ALTERNATE ROOF FRAMING PLAN

PROJ. MGR.:	HCW
DRAWN:	ABS
DATE:	FEBRUARY 1, 2022
REVISIONS	

JOB NO. 21-66
SHEET NO:
S2.2b
9 OF 10
0 1" 2"

SDG
STRUCTURAL DESIGN GROUP
300 Chase Park South, Suite 125
Hoover, AL 35244
tel 205-824-5200
fax 205-824-5280
Job Number 22-001

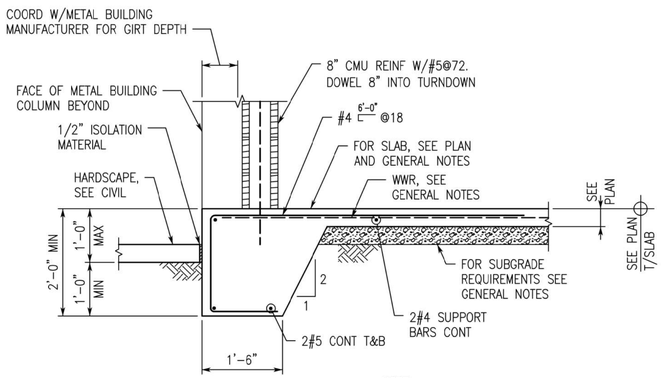

SECTION 1/S3.1
3/4"=1'-0"

NOTE:
AT SIMILAR CONDITION, COORDINATE W/ARCH. DWGS FOR INTERIOR WALL TYPE.

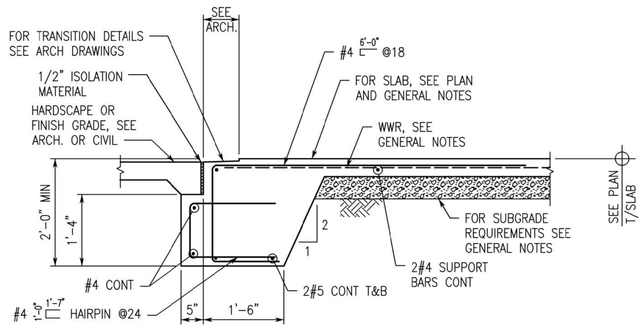

SECTION 2/S3.1
3/4"=1'-0"

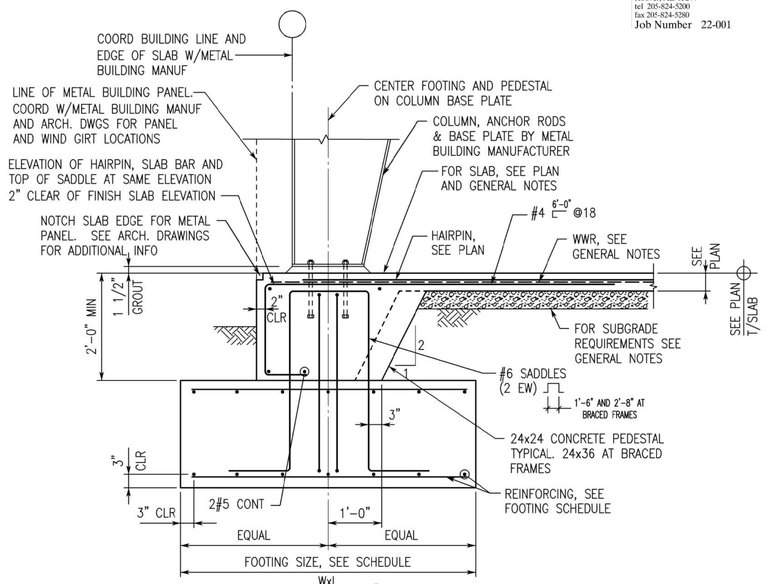

SECTION 3/S3.1
3/4"=1'-0"

LATHAN
ARCHITECTS
LATHAN • BRYANT • CALMA

NEW JROTC FACILITY FOR PLEASANT GROVE HIGH SCHOOL

100 SPARTAN DRIVE, PLEASANT GROVE, AL 35127
JEFFERSON COUNTY BOARD OF EDUCATION

ALABAMA REGISTERED No. 22596 PROFESSIONAL ENGINEER H. CRAIG WINN
H. Craig Winn P.E.
2-1-2022

SHEET TITLE:
SECTIONS AND DETAILS

PROJ. MGR.:	HCW
DRAWN:	ABS
DATE:	FEBRUARY 1, 2022
REVISIONS	

JOB NO. 21-66

SHEET NO:
S3.1
10 OF 10

0 1" 2"

GENERAL NOTES

1. LOCATIONS OF UTILITIES SHOWN ON PLANS ARE APPROXIMATE. VERIFY WITH LOCAL UTILITY PRIOR TO BIDDING.
2. CONTRACTOR SHALL VERIFY EXACT LOCATION, SIZE, AND ELEVATION OF ALL EXISTING SERVICES PRIOR TO INSTALLING ANY NEW PIPE.
3. ALL OUTSIDE CLEANOUTS SHALL BE BROUGHT TO GRADE AND EMBEDDED IN 18"X18"X16" THICK CONCRETE PAD. (J.R. SMITH 4258 OR EQUAL.)
4. WHEREVER DISSIMILAR METALS ARE CONNECTED ON WATER LINES, A DIELECTRIC UNION SHALL BE USED.
5. ALL HORIZONTAL WATER AND VENT PIPING SHALL BE RUN ABOVE CEILING ON PLAN WHERE SHOWN UNLESS OTHERWISE NOTED.
6. ALL HORIZONTAL SANITARY PIPING IS RUN BELOW FLOOR ON PLAN WHERE SHOWN UNLESS OTHERWISE NOTED.
7. ALL WATER PIPING BELOW SLAB ON GRADE SHALL BE BENT UP AT ENDS SO THAT NO JOINTS OCCUR BELOW FLOOR.
8. COORDINATE ALL PIPE ROUTING TO AVOIDE CONFLICTS WITH STRUCTURAL, MECHANICAL, AND ELECTRICAL FEATURES OF BUILDING.
9. ALL WALL HYDRANTS AND HOSE BIBBS SHALL BE MOUNTED 24" ABOVE FINISH GRADE OF FINISH FLOOR UNLESS OTHERWISE NOTED.
10. ALL WATER PIPING INSTALLED IN EXTERIOR WALLS SHALL BE LOCATED ON THE INTERIOR SIDE OF THE EXTERIOR WALL INSULATION.
11. NO VENT THRU ROOF IS TO BE LOCATED WITHIN 10 FEET OF ANY BUILDING AIR INTAKES, PER CODE. COORDINATE WITH MECHANIAL AND GENERAL CONTRACTORS.
12. DOMESTIC WATER PIPING AND FIRE PROTECTION PIPING LOCATED ABOVE THE CEILING, SHALL BE INSTALLED BELOW CEILING INSULATION.
13. CONTRACTOR SHALL COORDINATE MECHANICAL FLOOR DRAIN LOCATIONS WITH MECHANICAL EQUIPMENT PRIOR TO INSTALLATION.
14. CONTRACTOR SHALL PROVIDE SHOCK ARRESTORS ON ALL BRANCH LINES.
15. CONTRACTOR SHALL COORDINATE ALL SINKS WITH CASEWORK PRIOR TO ORDERING SINKS.
16. DOMESTIC WATER PIPING SHALL NOT BE INSTALLED IN EXTERIOR WALLS.
17. PROVIDE DISINFECTION OF WATER PIPING SYSTEM WITH CHLORINE SOLUTION AS PER CODE.
18. INSTALLATION OF BACKFLOW PREVENTER SHALL COMPLY WITH CURRENT INTERNATIONAL BUILDING CODE AND CURRENT INTERNATIONAL PLUMBING CODE.
19. ALL OVERHEAD WATER PIPING TO BE RUN BELOW INSULATION AT BOTTOM OF TRUSSES FOR FREEZE PROTECTION.
20. ALL INDIRECT DRAINS TO HAVE INSULATED DEEP SEAL P-TRAPS.
21. ALL FLOOR DRAINS AND INDIRECT DRAINS TO HAVE INSULATED DEEP SEAL P-TRAPS WITH TRAP SEAL PROTECTION AS APPROVED BY LOCAL AUTHORITY.
22. ALL WALL HYDRANTS TO BE FREEZE PROOF AND TO HAVE VACUUM BREAKERS.
23. INSULATION ON ALL PIPING SHALL MEET SMOKE/ FLAME RATING OF 25 & 50.
24. NO JOINTS IN WATER PIPING BELOW SLAB.
25. THE LOCATION OF LAVATORIES AND WATER CLOSETS RELATIVE TO THE FINISHED WALL IS CRITICAL. REFER TO ARCHITECTURAL AND THE SPECIFICATIONS FOR ADDITIONAL INFORMATION. ALL WATER CLOSETS TO BE 18" FROM FINISH WALL TO CENTER OF WATER CLOSET.
26. WATER HAMMER ARRESTORS ARE REQUIRED TO PROTECT WATER PIPING SYSTEMS WHERE QUICK-CLOSING VALVES ARE UTILIZED. WATER HAMMER ARRESTORS SHALL CONFORM TO ASSE 1010.
27. THESE DRAWINGS NOT INTENDED TO SHOW ALL POSSIBLE CONDITIONS. IT IS INTENDED THAT A COMPLETE PLUMBING SYSTEM BE PROVIDED WITH ALL NECESSARY EQUIPMENT, APPURTENANCES AND CONTROLS, COMPLETELY COORDINATED WITH ALL DISCIPLINES. ALL PARAMETERS GIVEN IN THESE DOCUMENTS SHALL BE STRICTLY CONFORMED WITH ANY ITEMS AND LABOR REQUIRED FOR A COMPLETE PLUMBING SYSTEM IN ACCORDANCE WITH ALL APPLICABLE CODES, STANDARDS AND THESE CONTRACT DOCUMENTS SHALL BE FURNISHED WITHOUT INCURRING ANY ADDITIONAL COST TO THE PROJECT, CAREFULLY REVIEW ALL CONTRACT DOCUMENTS AND THE DESIGN OF OTHER TRADES BEFORE PREPARING SHOP DRAWINGS.
28. COORDINATE PLUMBING PIPING WITH STRUCTURAL, PLUMBING, HVAC, AND ELECTRICAL. MAKE OFFSETS AND TRANSITIONS TO COORDINATE WITH OTHER TRADES WITHOUT ANY ADDITIONAL COST TO THE PROJECT.
29. COORDINATE ALL PLUMBING IN SLAB WITH BUILDING FOOTINGS.
30. NO PIPING TO BE RUN ABOVE ELECTRICAL PANELS. MAINTAIN ALL REQUIRED CLEARANCES.
31. CONTRACTOR SHALL VISIT JOB SITE AND VERIFY EXISTING CONDITIONS BEFORE SUBMITTING A PRICE, ORDERING MATERIALS OR PERFORMING ANY WORK. NOTIFY THE ARCHITECT OF ANY DEVIATION FROM PLUMBING PLAN.
32. MAINTAIN A MAXIMUM OF 55 PSIG WATER PRESSURE AT PLUMBING FIXTURES, CONSISTENT WITH ADEQUATE FLOW RATES.
33. SUPPORT PIPE AS REQUIRED BY THE CURRENT INTERNATIONAL PLUMBING CODE.
34. ALL FOOTINGS AT PLUMBING CHASE WALLS SHALL BE MIN 24" BELOW FINISHED GRADE TO COORDINATE WITH WASTE PIPING IN SLAB.
35. FIRESTOP ALL RATED WALL AND FLOOR PENETRATIONS. SEE ARCHITECTURAL DRAWINGS FOR RATED WALL AND FLOOR LOCATIONS.
36. OFFSET ALL VTR'S TO BACKSIDE OF ROOF RIDGE.
37. DO NOT BEGIN WORK UNTIL ELEVATION OF FINAL CONNECTION POINT IS VERIFIED AND GRADING OF ENTIRE SYSTEM CAN BE DETERMINED (EVEN IF FINAL CONNECTION IS SPECIFIED UNDER ANOTHER SECTION).

PLUMBING LEGEND

	DOMESTIC COLD WATER	VS	VENT STACK	WH	WALL HYDRANT
	DOMESTIC HOT WATER SUPPLY	VSTR	VENT THROUGH ROOF	ABV	ABOVE
	DOMESTIC HOT WATER RETURN	PRV	PRESSURE RELIEF VALVE	AFF	ABOVE FINISHED FLOOR
	SOIL, WASTE, OR SANITARY SEWER	UM	UTILITY METER	BFP	BACKFLOW PREVENTER
	VENT	CO	CLEANOUT	BFF	BELOW FINISHED FLOOR
	PIPE TURNING DOWN	FD	FLOOR DRAIN	CW	COLD WATER
	PIPE TURNING UP	FS	FLOOR SINK	DN	DOWN
	TEE DOWN	P-#	PLUMBING FIXTURE	WH - #	WATER HEATER
	TEE UP	#	RISER NUMBER	GPH	GALLONS PER HOUR
	UNION	MFD	MECHANICAL FLOOR DRAIN	GPM	GALLONS PER MINUTE
	CAP ON END OF PIPE	WS	WASTE STACK	HW	HOT WATER
	BALANCE VALVE	HB	HOSE BIBB	HWR	HOT WATER RETURN
	BALL VALVE	EX	EXISTING		
	CHECK VALVE	TYP	TYPICAL		

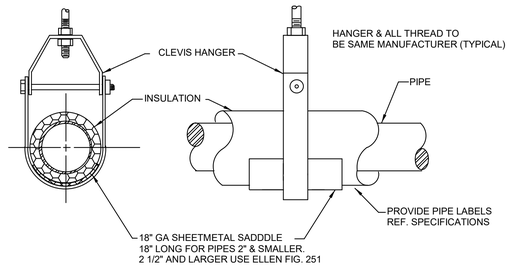

SUSPENDED PIPE SUPPORT

NO SCALE

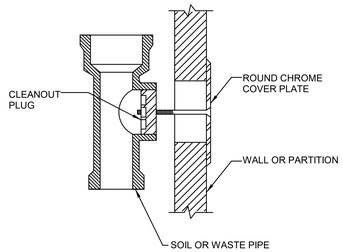

WALL CLEANOUT

NO SCALE

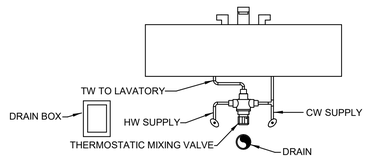

DETAIL OF TMV & DRAIN BOX BELOW LAVATORY

NO SCALE

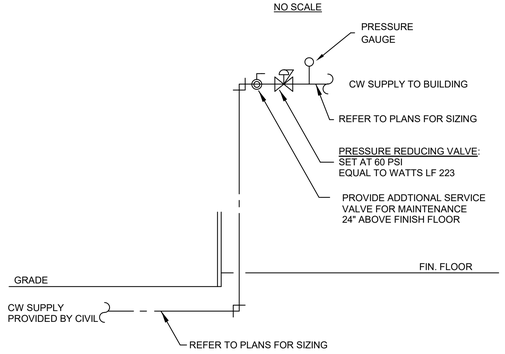

DETAIL OF WATER ENTRY

NO SCALE

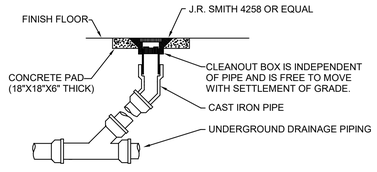

DETAIL OF CLEANOUT TO GRADE

NO SCALE

PLUMBING FIXTURE SCHEDULE

MARK	FIXTURE	WASTE	CW	HW	REMARKS
FD	FLOOR DRAIN	3"	-	-	J.R. SMITH #2010 WITH 6" ROUND NICKEL BRONZE GRATE. PROVIDE WITH J.R. SMITH TRAP INSERT.
MFD	MECHANICAL FLOOR DRAIN	4"	-	-	J.R. SMITH #2242 WITH SEDIMENT BUCKET. PROVIDE WITH J.R. SMITH TRAP INSERT.
P-1	WATER CLOSET - ADA COMPLIANT	4"	1"	-	FLOOR MOUNTED - KOHLER K-96057-SS-0 COMPLETE SLOAN ROYAL #111 FLUSH VALVE WITH YJ BRACKET AND CHURCH "DURA GUARD" MODEL # 2155 SSC SEAT.
P-2	LAVATORY - ADA COMPLIANT	1 1/4"	1/2"	1/2"	WALL HUNG - KOHLER K-2032 (20" X 18") COMPLETE, SYMMONS S-20-0 FAUCET, K7715 OUTLET WITH TAILPIECE, J.R. SMITH #700-M31-Z FIXTURE SUPPORT, MCGUIRE #165 SUPPLIES WITH STOPS AND MCGUIRE #8872 P-TRAP. INSULATE P-TRAP, STOPS AND SUPPLIES WITH "PRO-WRAP" BY MCGUIRE. MOUNT WITH RIM MAXIMUM 34" AFF. PROVIDE LAWLER 570 THERMOSTATIC MIXING VALVE MOUNTED BELOW LAVATORY. RUN 100° F WATER TO FAUCET. MUST MEET A.D.A. GUIDELINES.
P-3	WATER COOLER - ADA COMPLIANT - W/ BOTTLE FILLER	1 1/2"	1/2"	-	OASIS #PG8EBFSL BI-LEVEL WATER COOLER WITH BOTTLE FILLER STATION. COMPLETE WITH STAINLESS STEEL CABINET AND WATERWAYS THAT ARE MANUFACTURED OF 100% LEAD FREE MATERIAL. J.R. SMITH #834 FIXTURE SUPPORT EBC TA150 P-TRAP AND EBC LA10 STOP WITH SUPPLY. FULLY INSULATE P-TRAP WITH EBC IK INSULATOR. INSTALL WITH LOWER SPOUT OUTLET MAXIMUM 36" AFF. MUST MEET A.D.A. INSTALL WITH BOTTLE FILLER. INSTALL COMPLETE. PROVIDE WITH CANE APRON AS REQUIRED.
P-4	MOP SINK	3"	1/2"	1/2"	STERN WILLIAMS #SBC-1700 (24" X 24") COMPLETE, T-35 HOSE WITH WALL HOOK, STAINLESS STEEL BACKSPLASH AND CHICAGO FAUCET #897 FAUCET.
P-5	SHOWER VALVE - ADA COMPLIANT	SD	1/2"	1/2"	CHICAGO FAUCET 1907-CP THERMOSTATIC/PRESSURE BALANCING SHOWER VALVE, 151-ACP HAND SHOWER AND GRAB BAR, 763-CP DIVERTER VALVE, FIXED SHOWER HEAD, WITH BLADE HANDLE, AND TRIM. ADJUST FOR 109°F MAXIMUM TEMP. PROVIDE BACK PLATE.
P-6	WALL HYDRANT	-	3/4"	-	J.R. SMITH #5509-QT, WITH INTEGRAL BACKFLOW PREVENTER, LATCHING COVER, FREEZE-PROOF AND OF PROPER LENGTH FOR WALL IN WHICH INSTALLED, ALL BRONZE BOX. VALVE SEAT MUST BE ON BUILDING SIDE OF EXTERIOR WALL INSULATION. INSTALL WITH CENTER LINE 24" ABOVE FINISH GRADE. PROVIDE OWNER WITH ONE (1) LOOSE KEY FOR EACH WALL HYDRANT.
P-7	DRAIN BOX	1 1/2"	-	-	PROVIDE A SIOUX CHIEF MODEL #696-3F DRAIN BOX, #696-LC LOUVERED COVER, #696-CF SECONDARY DRAINAGE FUNNEL, AND J.R. SMITH TRAP SEAL INSERT. BOX TO COME COMPLETE WITH WALL FLANGE AND LOUVER. COORDINATE WITH MECHANICAL TO RECEIVE CONDENSATE WASTE. COORDINATE EXACT MOUNTING HEIGHT AND LOCATION WITH ARCHITECT.
SD	SHOWER DRAIN	2"	-	-	J.R. SMITH #2010 WITH 4" ROUND STRAINER. PROVIDE WITH J.R. SMITH TRAP INSERT.

WATER HEATER SCHEDULE

MARK	FIXTURE	ELEC INFO.	REMARKS
CP-1	CIRCULATION PUMP	115V, 1 PHASE, 1/12 HP	ARMSTRONG COMPASS. PROVIDE WITH AQUASTAT AND TIMER. AQUASTAT TO BE RATED FOR 100° - 160°F
ET-1	EXPANSION TANK	-	AMTROL THERM - X-TROL #ST-5 EXPANSION TANK, PRE-CHARGED, WELDED STEEL CONSTRUCTION. ISOLATION BETWEEN WATER AND AIR SHALL BE BY A BUTYL DIAPHRAM.
WH-1	ELECTRIC WATER HEATER	208V; 1 PH; 15 KW	LOCHINVAR HST15-080, 80 GALLON STORAGE, 19 GALLON RECOVERY AT 100°F RISE. NEW P&T RELIEF VALVE. SET OUTLET TEMPERATURE AT 140°F. INSTALL AS DETAILED ON DRAWINGS. VERIFY VOLTAGE WITH ELECTRICAL SECTION.

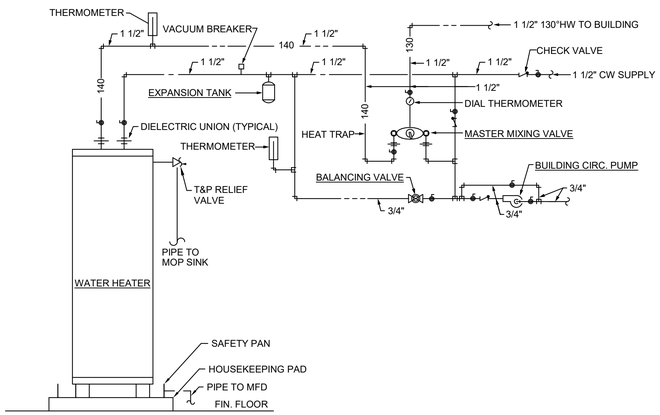

DETAIL OF WATER HEATER-WH-1

NO SCALE

EDMONDS Engineering
2 Riverchase Office Plaza
Suite 205
Hoover, AL 35244
(205) 988-2069
www.edmondsengineering.com

Project Number :
50149470

LATHAN ARCHITECTS
LATHAN · BRYANT · CALMA

NEW JROTC FACILITY FOR PLEASANT GROVE HIGH SCHOOL

100 SPARTAN DRIVE, PLEASANT GROVE, AL 35127
JEFFERSON COUNTY BOARD OF EDUCATION



SHEET TITLE:
PLUMBING - SCHEDULES, NOTES, LEGENDS, & DETAILS

PROJ. MGR.:	SMC
DRAWN:	ALV
DATE:	FEBRUARY 8, 2022
REVISIONS	

JOB NO. 21-66

SHEET NO:

P0.01

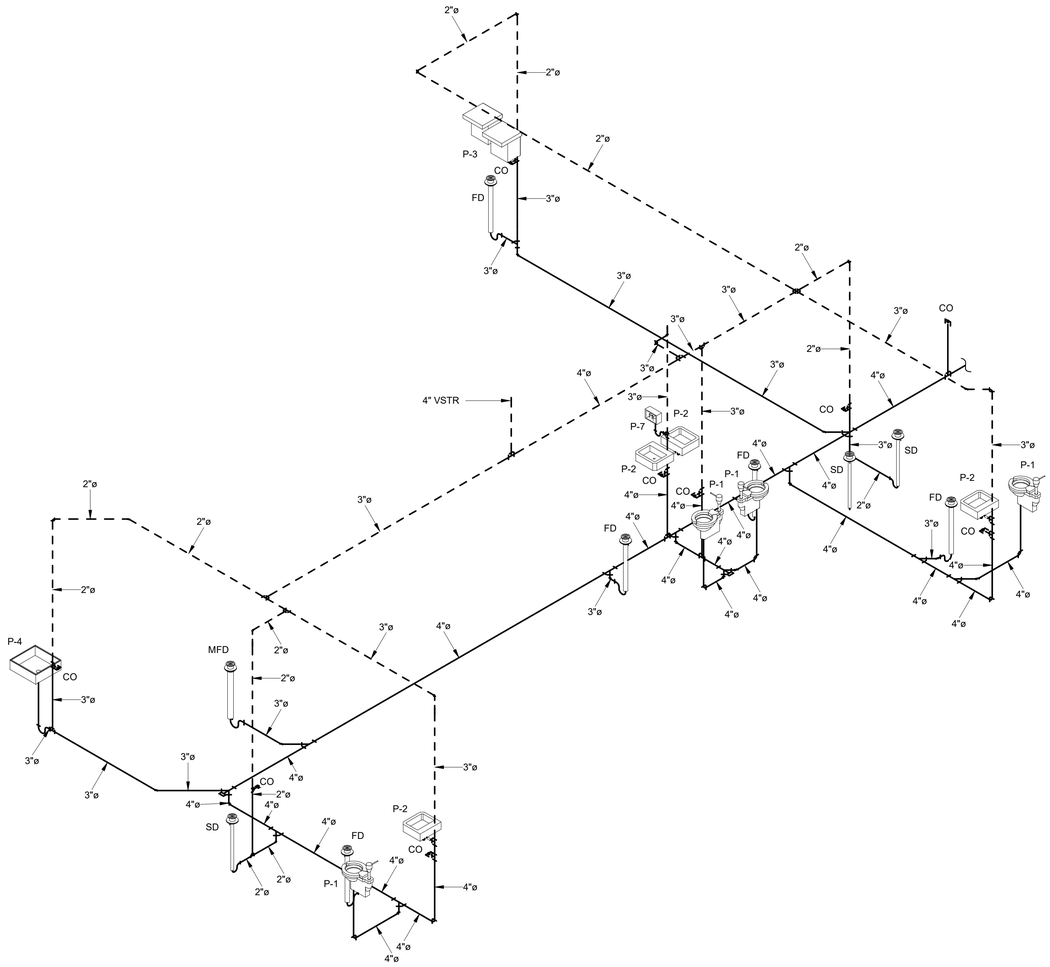

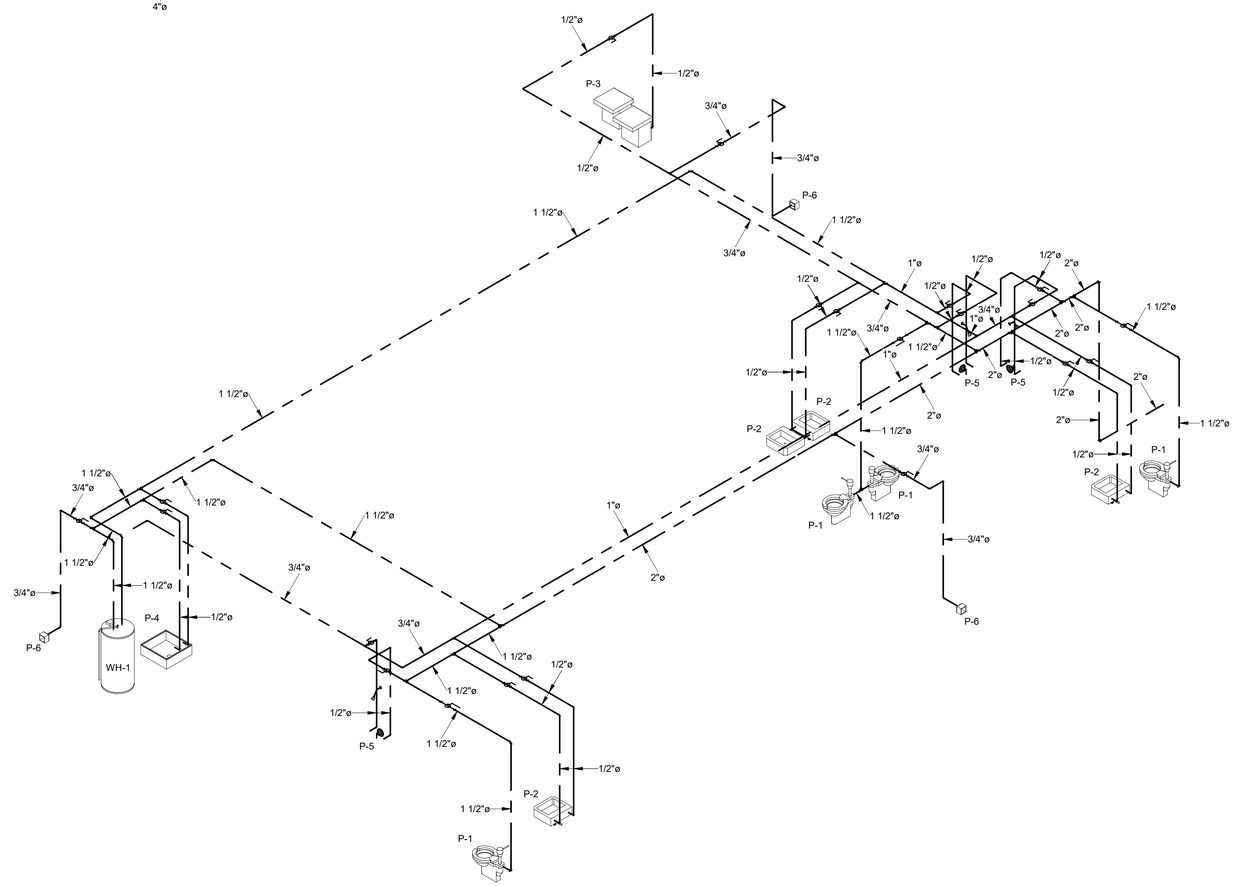

EDMONDS Engineering
2 Riverchase Office Plaza
Suite 205
Hoover, AL 35244
(205) 988-2069
www.edmondsengineering.com

Project Number :
50149470

LATHAN ARCHITECTS
LATHAN · BRYANT · CALMA

NEW JROTC FACILITY FOR PLEASANT GROVE HIGH SCHOOL

100 SPARTAN DRIVE, PLEASANT GROVE, AL 35127
JEFFERSON COUNTY BOARD OF EDUCATION

ALABAMA
No. 24747
PROFESSIONAL
02-08-2022
ENGINEER
WADE STEWART

SHEET TITLE:
PLUMBING - RISERS

PROJ. MGR.:	SMC
DRAWN:	ALV
DATE:	FEBRUARY 8, 2022
REVISIONS	

JOB NO. 21-66

SHEET NO:
P0.02
2 OF 4

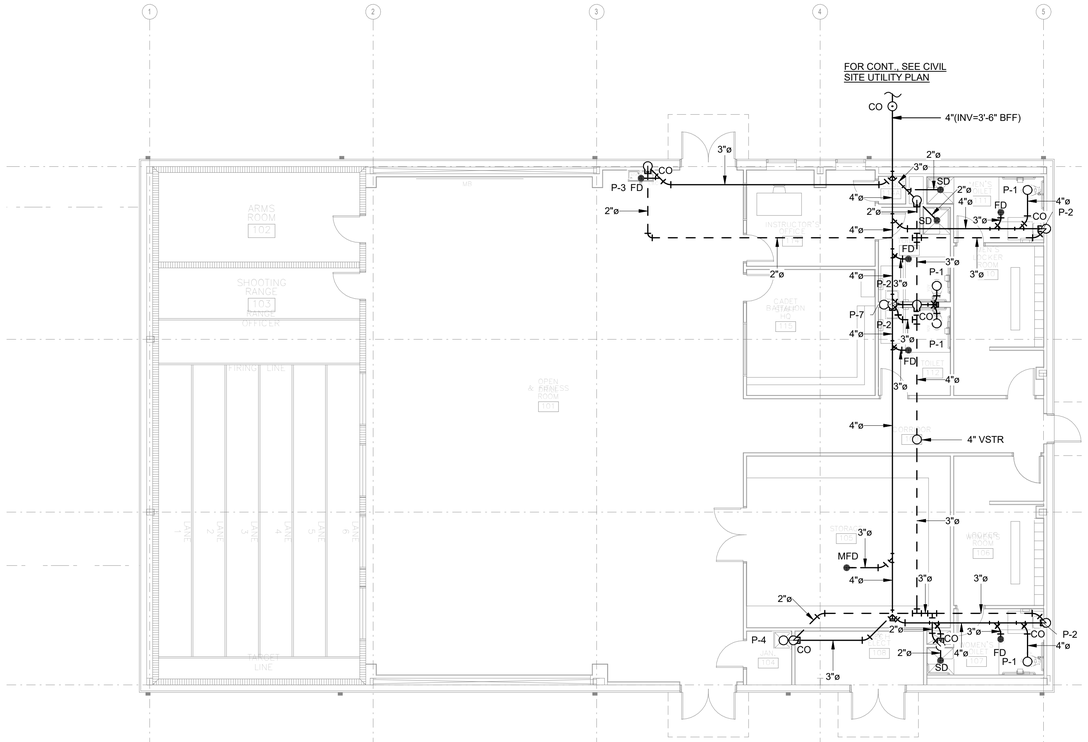

1 NON-PRESSURE - FLOOR PLAN
1/8" = 1'-0"

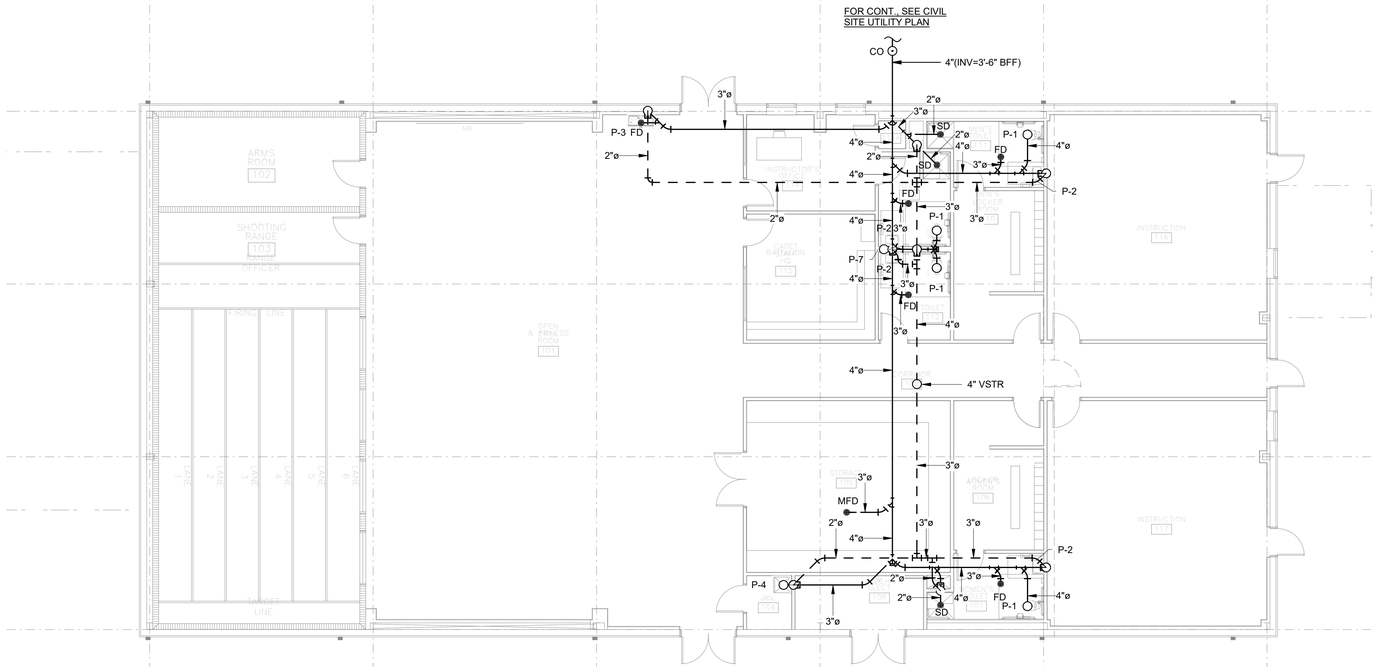

2 NON-PRESSURE - FLOOR PLAN - ALT
1/8" = 1'-0"

EDMONDS Engineering
2 Riverchase Office Plaza
Suite 205
Hoover, AL 35244
(205) 988-2069
www.edmondsengineering.com
Project Number :
50149470

LATHAN ARCHITECTS
LATHAN · BRYANT · CALMA

NEW JROTC FACILITY FOR PLEASANT GROVE HIGH SCHOOL

100 SPARTAN DRIVE, PLEASANT GROVE, AL 35127
JEFFERSON COUNTY BOARD OF EDUCATION

ALABAMA
No. 24747
PROFESSIONAL
02-08-2022
ENGINEER
WADE STEWART

SHEET TITLE:
NON-PRESSURE - FLOOR PLANS

PROJ. MGR.:	SMC
DRAWN:	ALV
DATE:	FEBRUARY 8, 2022
REVISIONS	

JOB NO. 21-66

SHEET NO:
P1.01
3 OF 4

0 1" 2"

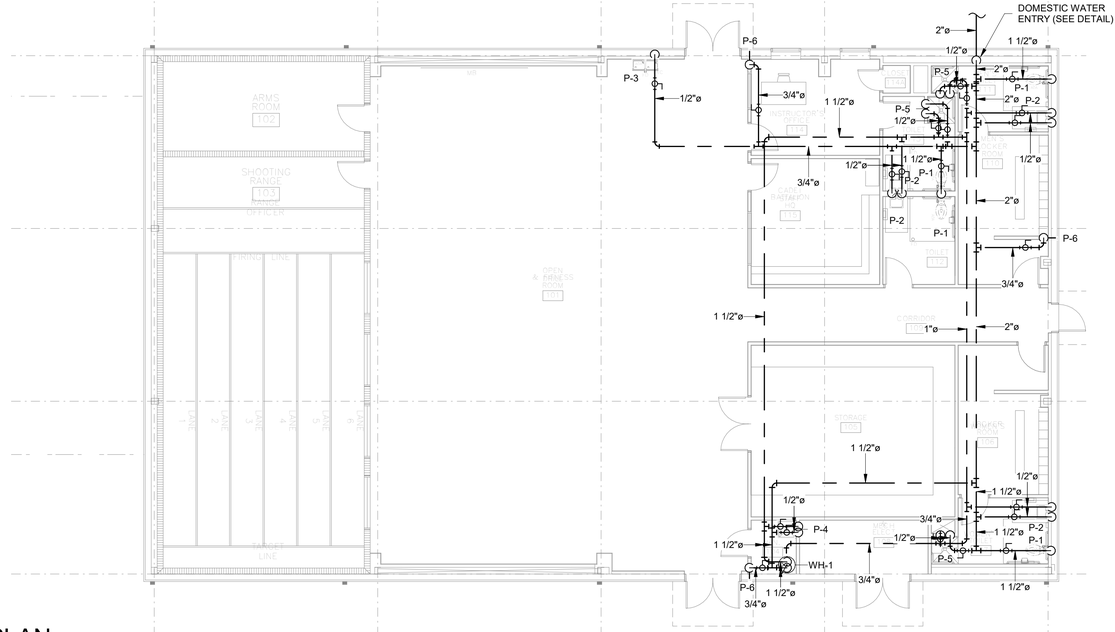

1 PRESSURE - FLOOR PLAN
1/8" = 1'-0"

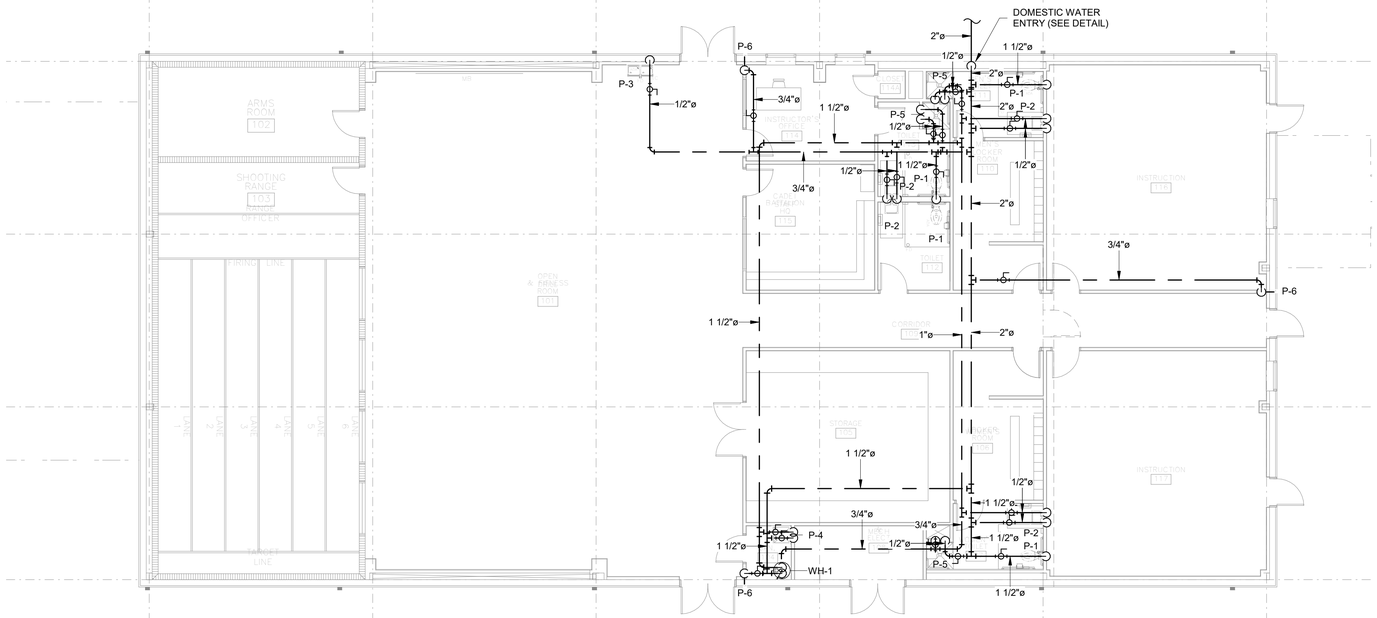

2 PRESSURE - FLOOR PLAN - ALT
1/8" = 1'-0"

EDMONDS Engineering
2 Riverchase Office Plaza
Suite 205
Hoover, AL 35244
(205) 988-2069
www.edmondsengineering.com

Project Number :
50149470

LATHAN ARCHITECTS
LATHAN · BRYANT · CALMA

NEW JROTC FACILITY FOR PLEASANT GROVE HIGH SCHOOL

100 SPARTAN DRIVE, PLEASANT GROVE, AL 35127
JEFFERSON COUNTY BOARD OF EDUCATION

ALABAMA REGISTERED
No. 24747
PROFESSIONAL
02-08-2022
ENGINEER
WADE STEWART

SHEET TITLE:
PRESSURE - FLOOR PLANS

PROJ. MGR.:	SMC
DRAWN:	ALV
DATE:	FEBRUARY 8, 2022
REVISIONS	

JOB NO. 21-66

SHEET NO:
P1.02
4 OF 4

DUCTWORK LEGEND

(CFM) S	SUPPLY DIFFUSER
(CFM) R	RETURN GRILLE
(CFM) E	EXHAUST GRILLE
(CFM) T	TRANSFER AIR GRILLE
(CFM) SR	SIDEWALL REGISTER
ø	ROUND DUCT SYMBOL
W X H	RECTANGULAR DUCT (WIDTH X HEIGHT)
	EXISTING DUCTWORK, PIPING, OR EQUIPMENT TO REMAIN.
	EXISTING DUCTWORK, PIPING, OR EQUIPMENT TO BE REMOVED.
	RECTANGULAR SUPPLY DUCT TURNING UP
	RECTANGULAR SUPPLY AIR DUCT TURNING DOWN
	RECTANGULAR RETURN AIR OR EXHAUST DUCT TURNING UP
	RECTANGULAR RETURN AIR OR EXHAUST DUCT TURNING DOWN
	FLAT OVAL TURNING UP.
	FLAT OVAL TURNING DOWN.
	ROUND DUCT TURNING DOWN
	ROUND DUCT TURNING UP
	MAXIMUM 5' FLEXIBLE DUCT ALL BRANCH DUCTS
	RECTANGULAR 90° ELBOW WITH TURNING VANES FOR SUPPLY.
	RISE OR DROP IN DUCT
	RECTANGULAR BRANCH OFF OF RECTANGULAR DUCT WITH MANUAL DAMPER
	CONICAL SPIN-IN WITH MANUAL DAMPER
MD	MANUAL DAMPER
FD	FIRE DAMPER (PROVIDE ACCESS DOOR)
AD	AUTOMATIC DAMPER
SFD	COMBINATION SMOKE/FIRE DAMPER (PROVIDE ACCESS DOOR)
T	TEMPERATURE SENSOR
H	HUMIDITY SENSOR
C	CO2 MONITOR
	CONNECT TO EXISTING, FIELD VERIFY EXACT SIZE AND LOCATION.

HVAC ABBREVIATIONS

A	AMPS
AFF	ABOVE FINISH FLOOR
AHU	AIR HANDLING UNIT
AMB.	AMBIENT
ARCH.	ARCHITCTURAL
BHP	BRAKE HORSEPOWER
BOD	BOTTOM OF DUCT
BTUH	BRITISH THERMAL UNIT PER HOUR
CFM	CUBIC FEET PER MINUTE
DB	DRY BULB
DN.	DOWN
°F	DEGREES FAHERNHEIT
ΔP	CHANGE IN PRESSURE
ΔT	CHANGE IN TEMPERATURE
DIA.	DIAMETER
EA	EXHAUST AIR
ENT.	ENTERING
EAT	ENTERING AIR TEMPERATURE
EMG	EXPANDED METAL GRILLE
EWT	EXTERNAL WATER TEMPERATURE
E.S.P.	EXTERNAL STATIC PRESSURE
EX.	EXISTING
EXT.	EXTERNAL
FPM	FEET PER MINUTE
FT.	FEET
F.V.	FACE VELOCITY
GAL.	GALLONS
GPM	GALLONS PER MINUTE
H	HEIGHT
HP	HORSEPOWER
IN.	INCHES
I.D.	INSIDE DIAMETER
KW	1000 WATTS
L	LENGTH
LBS.	POUNDS
LRA	LOCKED ROTOR AMPS
LVG.	LEAVING
LAT	LEAVING AIR TEMPERATURE
LWT	LEAVING WATER TEMPERATURE
MAX.	MAXIMUM
MAT	MIXED AIR TEMPERATURE
MBH	1000 BTUH
MCA	MINIMUM CIRCUIT AMPACITY
MIN.	MINIMUM
MOCP	MAXIMUM OVER CURRENT PROTECTION
NO	NORMALLY OPEN
NC	NORMALLY CLOSED
NPLV	NON-STAND PART LOAD VALUE
OSA	OUTSIDE AIR
O.D.	OUTSIDE DIAMETER
PSI	POUNDS PER SQUARE INCH
PSIA	PSI ATMOSPHERIC
PSIG	PSI GAUGE
RA	RETURN AIR
RAT	RETURN AIR TEMPERATURE
RH	RELATIVE HUMIDITY
RLA	RATED LOAD AMPS
RPM	REVOLUTIONS PER MINUTE
SA	SUPPLY AIR
SAT	SUPPLY AIR TEMPERATURE
T.S.P.	TOTAL STATIC PRESSURE
TD	TRANSFER DUCT
TOD	TOP OF DUCT
U.N.O.	UNLESS NOTED OTHERWISE
V	VOLUME
V/Ø/Hz	VOLTS/PHASE/HERTZ
W.G.	WATER GAGE
W	WIDTH
WB	WET BULB

HVAC CONTROLS LEGEND

T	TEMPERATURE SENSOR
H	HUMIDITY SENSOR
C	CO2 MONITOR
CP	120V HVAC CONTROLS POWER
TS	AVERAGING TEMPERATURE SENSOR
H	DUCT MOUNTED HUMIDITY SENSOR
AO	ANALOG OUTPUT
AI	ANALOG INPUT
DO	DIGITAL OUTPUT
DI	DIGITAL INPUT
SD	DUCT MOUNTED SMOKE DETECTOR. SMOKE DETECTOR FURNISHED AND WIRED BY ELECTRICAL CONTRACTOR, INSTALLED IN DUCT BY MECHANICAL CONTRACTOR.
HOA	HAND-OFF-AUTO MAGNETIC STARTER
SP	DUCT STATIC PRESSURE SENSOR
DP	DIFFERENTIAL PRESSURE SENSOR
	INTERLOCK WITH FIRE ALARM SYSTEM
M	FAN/PUMP MOTOR
VFD	VARIABLE FREQUENCY DRIVE
CT	CURRENT TRANSDUCER
FS	FLOW SWITCH
	DIRECTION OF FLOW
TS	PIPE MOUNTED TEMPERATURE SENSOR
	2-WAY AUTOMATIC VALVE
	3-WAY AUTOMATIC VALVE
H-O-A	HAND-OFF-AUTO SWITCH
AFM	AIR FLOW MONITOR. (PROVIDE ACCESS DOOR AT EACH AIR FLOW MONITOR.)

PIPING LEGEND

CHS	CHILLED WATER SUPPLY PIPING
CHR	CHILLED WATER RETURN PIPING
HWS	HOT WATER SUPPLY PIPING
HWR	HOT WATER RETURN PIPING
D	DRAIN PIPING
AAV OR	AAV-AUTO. AIR VENT (MARKED OR SHOWN)
	GATE VALVE
	GLOBE VALVE
	BALL VALVE
	TWO-WAY AUTO CONTROL VALVE.
	THREE-WAY AUTO CONTROL VALVE.
	BUTTERFLY VALVE.
	BUTTERFLY VALVE.
	PRESSURE REDUCING VALVE.
	PIPE TURNING UP.
	PIPE TURNING DOWN.
	BRANCH OFF TOP OF MAIN.
	BRANCH OFF BOTTOM OF MAIN.
	BRANCH OFF SIDE OF MAIN.
	CALIBRATED BALACING VALVE
	ECCENTRIC REDUCER
	STRAINER (Y)
	FLEXIBLE CONNECTION IN PIPING
	UNION
	PETES PLUG
	SLOPE DOWN IN DIRECTION OF ARROW.
	CHECK VALVE
	ASME PRESSURE RELIEF VALVE.

AIR DEVICE LEGEND

MARK	EXAMPLE	DESCRIPTION	SIZE	BASIS OF DESIGN
"S"	200S / CFM	PLAQUE FACE CEILING DIFFUSER WITH ROUND NECK. ALL CEILING DIFFUSERS TO HAVE A 24X24 CEILING PANEL (EXCEPT WHERE SHOWN AS 12X12). ALL CEILING DIFFUSERS TO HAVE ROUND NECKS.	CFM SHOWN ON PLANS. NECK & RUN-OUT SIZED PER THE FOLLOWING: CFM / NECK SIZE / RUN-OUT SIZE 0 - 100 / 6" / 6" 101 - 200 / 8" / 8" 201 - 300 / 10" / 10" 301 - 500 / 12" / 12" 501 - 750 / 15" / 15" 751 - 1000 / 18" / 18"	TITUS OMNI
"LD"	200LD / CFM	LOUVER FACE CEILING DIFFUSER WITH SQUARE NECK. ALL CEILING DIFFUSERS TO HAVE A 24X24 CEILING PANEL (EXCEPT WHERE SHOWN AS 12X12). ALL CEILING DIFFUSERS TO HAVE SQUARE NECKS.	CFM SHOWN ON PLANS. NECK & RUN-OUT SIZED PER THE FOLLOWING: CFM / NECK SIZE / RUN-OUT SIZE 0 - 100 / 6"x6" / 6" 101 - 200 / 9"x9" / 8" 201 - 300 / 12"x12" / 10" 301 - 500 / 15"x15" / 12" 501 - 750 / 18"x18" / 15" 751 - 1000 / 21"x21" / 18"	TITUS TDCA-AA
"R", "E", "T"	200R / CFM; R24 / SQUARE NECK SIZE	CEILING MOUNTED RETURN (R), EXHAUST (E), OR TRANSFER (T) EGGCRATE GRILLE. ALL GRILLES IN A LAY-IN CEILING TO HAVE A 24X24 CEILING PANEL.	CFM SHOWN ON PLANS. NECK SIZED PER THE FOLLOWING: CFM / NECK SIZE 0 - 100 / 6x6 101 - 200 / 8x8 201 - 350 / 10x10 351 - 500 / 12x12 501 - 750 / 14x14 751 - 950 / 16x16 951 - 1200 / 18x18 1201 - 1500 / 20x20 1501 - 2000 / 24x24	TITUS 50F
SR	SR12X6 / 200 / CFM / W x H	SIDEWALL SUPPLY REGISTER.	SIZE (WxH) IN INCHES & CFM SHOWN.	TITUS 272FL
WRG / WTG	WRG12X6 / 200 / CFM / W x H	WALL RETURN GRILLE / WALL TRANSFER GRILLE.	SIZE (WxH) IN INCHES & CFM SHOWN.	TITUS 350FL

NOTES:

1. SEE SPECIFICATIONS FOR FINISH AND CONSTRUCTION MATERIAL FOR EACH AIR DEVICE.
2. COORDINATE WITH ARCHITECT'S CEILING PLAN FOR LAY-IN OR SURFACE MOUNTING OF CEILING MOUNTED AIR DEVICES.
3. COORDINATE LOCATIONS OF CEILING MOUNTED AIR DEVICES WITH LIGHT FIXTURES, SPRINKLER HEADS, AND OTHER CEILING MOUNTED DEVICES. DO NOT SCALE MECHANICAL DRAWINGS FOR LOCATIONS.

OUTDOOR HEAT PUMP (MINI SPLIT SYSTEM) SCHEDULE

TYPE:
1. OUTDOOR HEAT PUMP

NOTES:
1. AIRFLOW RATED AT HIGH FAN SPEED.
2. POWER FOR INDOOR UNIT IS FED FROM OUTDOOR UNIT.
3. COOLING CAPACITY RATED AT 95°F.
4. HEATING CAPACITY RATED AT 47°F.
5. REFRIGERANT CIRCUIT ACCESS PORTS LOCATED OUTDOORS SHALL BE FITTED WITH LOCKING TYPE TAMPER RESISTANT CAPS.

MARK	TYPE	COOLING CAPACITY	HEATING CAPACITY	ELECTRICAL					EFFICIENCY		BASIS OF DESIGN
				V	PH	HZ	MCA	MOCP	SEER	HSPF	
OHP-1	1	18 MBH	19 MBH	208 V	1	60	11 A	28 A	18.5	10.2	MITSUBISHI
OHP-2	1	18 MBH	19 MBH	208 V	1	60	11 A	28 A	18.5	10.2	MITSUBISHI
OHP-3	1	18 MBH	19 MBH	208 V	1	60	11 A	28 A	18.5	10.2	MITSUBISHI
OHP-4	1	18 MBH	19 MBH	208 V	1	60	11 A	28 A	18.5	10.2	MITSUBISHI
OHP-5	1	18 MBH	19 MBH	208 V	1	60	11 A	28 A	18.5	10.2	MITSUBISHI
OHP-6	1	30 MBH	32 MBH	208 V	1	60	24 A	40 A	18.1	9.6	MITSUBISHI
OHP-7	1	30 MBH	32 MBH	208 V	1	60	24 A	40 A	18.1	9.6	MITSUBISHI
OHP-8	1	24 MBH	26 MBH	208 V	1	60	19 A	26 A	19.6	10.8	MITSUBISHI
OHP-9	1	18 MBH	19 MBH	208 V	1	60	11 A	28 A	18.5	10.2	MITSUBISHI
OHP-ALT-1	1	30 MBH	32 MBH	208 V	1	60	19 A	26 A	22.8	11.6	MITSUBISHI
OHP-ALT-2	1	30 MBH	32 MBH	208 V	1	60	19 A	26 A	22.8	11.6	MITSUBISHI

INDOOR HEAT PUMP (MINI SPLIT SYSTEM) SCHEDULE

TYPE:
1. INDOOR, WALL MOUNT
2. INDOOR, HORIZONTAL DUCTED
3. INDOOR, CEILING CASSETTE

NOTES:
1. AIRFLOW RATED AT HIGH FAN SPEED.
2. POWER FOR INDOOR UNIT IS FED FROM OUTDOOR UNIT.
3. COOLING CAPACITY RATED AT 95°F.
4. HEATING CAPACITY RATED AT 47°F.

ACCESSORIES:
1. 3-POLE DISCONNECT SWITCH.
2. HARD WIRED UNIT CONTROLLER.
3. FULL PORT BALL VALVES & SCHRADER VALVES WITH FLARED CONNECTIONS.
4. CONDENSATE PUMP (120/1/60) - 1 GPH @ 33 FT. HD.

MARK	TYPE	AIRFLOW	COOLING CAPACITY	HEATING CAPACITY	DIMENSIONS (WxLxH)	ELECTRICAL				ACCESSORIES	BASIS OF DESIGN
						V	PH	HZ	MCA		
IHP-1	1	425	18 MBH	19 MBH	36" x 10" x 12"	208 V	1	60	1 A	1,2,3,4	MITSUBISHI
IHP-2	3	570	18 MBH	19 MBH	33" x 33" x 12"	208 V	1	60	1 A	1,2,3,4	MITSUBISHI
IHP-3	3	570	18 MBH	19 MBH	33" x 33" x 12"	208 V	1	60	1 A	1,2,3,4	MITSUBISHI
IHP-4	3	570	18 MBH	19 MBH	33" x 33" x 12"	208 V	1	60	1 A	1,2,3,4	MITSUBISHI
IHP-5	3	570	18 MBH	19 MBH	33" x 33" x 12"	208 V	1	60	1 A	1,2,3,4	MITSUBISHI
IHP-6	2	880	30 MBH	32 MBH	43" x 29" x 10"	208 V	1	60	2.73	1,2,3,4	MITSUBISHI
IHP-7	2	880	30 MBH	32 MBH	43" x 29" x 10"	208 V	1	60	2.73	1,2,3,4	MITSUBISHI
IHP-8	2	700	24 MBH	26 MBH	43" x 29" x 10"	208 V	1	60	2.63	1,2,3,4	MITSUBISHI
IHP-9	3	636	18 MBH	19 MBH	33" x 33" x 12"	208 V	1	60	1 A	1,2,3,4	MITSUBISHI
IHP-ALT-1	3	812	30 MBH	32 MBH	33" x 33" x 12"	208 V	1	60	1 A	1,2,3,4	MITSUBISHI
IHP-ALT-2	3	812	30 MBH	32 MBH	33" x 33" x 12"	208 V	1	60	1 A	1,2,3,4	MITSUBISHI

EDMONDS Engineering
2 Riverchase Office Plaza
Suite 205
Hoover, AL 35244
(205) 988-2069
www.edmondsengineering.com

Project Number : 50149470

LATHAN ARCHITECTS
LATHAN · BRYANT · CALMA

NEW JROTC FACILITY FOR PLEASANT GROVE HIGH SCHOOL

100 SPARTAN DRIVE, PLEASANT GROVE, AL 35127

JEFFERSON COUNTY BOARD OF EDUCATION



SHEET TITLE:
HVAC - LEGENDS, SCHEDULES, AND NOTES

PROJ. MGR.:	JWS
DRAWN:	RBG
DATE:	FEBRUARY 8, 2022
REVISIONS	

JOB NO. 21-66

SHEET NO: M0.01

1 OF 7

EDMONDS Engineering
2 Riverchase Office Plaza
Suite 205
Hoover, AL 35244
(205) 988-2069
www.edmondsengineering.com
Project Number :
50149470

LATHAN ARCHITECTS
LATHAN · BRYANT · CALMA

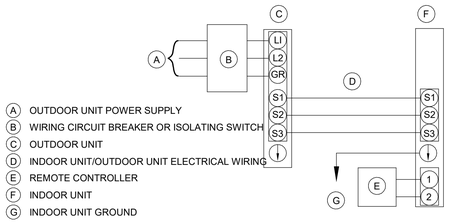

A OUTDOOR UNIT POWER SUPPLY
B WIRING CIRCUIT BREAKER OR ISOLATING SWITCH
C OUTDOOR UNIT
D INDOOR UNIT/OUTDOOR UNIT ELECTRICAL WIRING
E REMOTE CONTROLLER
F INDOOR UNIT
G INDOOR UNIT GROUND

WIRING DETAIL FOR DUCTLESS MINI-SPLIT

NO SCALE

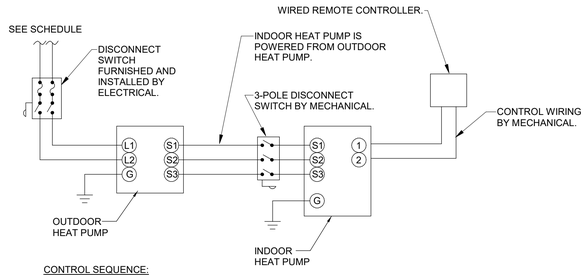

CONTROL SEQUENCE:

THE AC UNIT SHALL BE CONTROLLED BY A WIRED WALL MOUNTED REMOTE CONTROLLER. THE CONTROLLER SHALL CYCLE ON COMPRESSOR(S) TO MAINTAIN COOLING SETPOINT (74°F - ADJUSTABLE) AND HEATING SETPOINT (70°F - ADJUSTABLE). ALL MINI-SPLIT AC UNITS THAT SERVE ELECTRICAL AND IT ROOMS SHALL NOT SET THEIR TEMPERATURE BACK AT NIGHT. FOR ALL MINI-SPLIT AC UNITS THAT SERVE OFFICES, CLASSROOMS, ETC. SHALL SET THEIR TEMPERATURE BACK TO 4°F ABOVE SETPOINT IN SUMMER AND 4°F BELOW SETPOINT IN THE WINTER. COORDINATE WITH OWNER TO ESTABLISH OCCUPIED / UNOCCUPIED SCHEDULES.

DUCTLESS SPLIT SYSTEM CONTROLS

NO SCALE

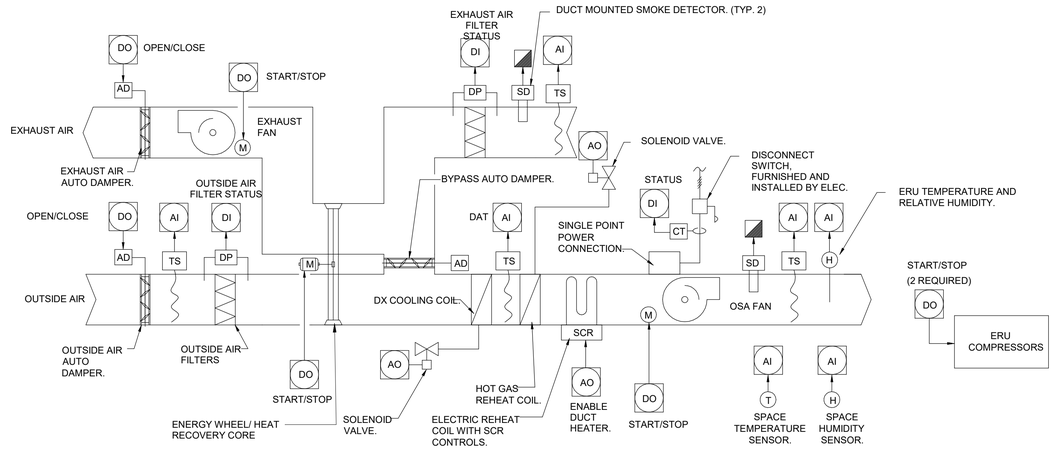

OUTSIDE AIR UNIT WITH ENERGY RECOVERY WHEEL / CORE CONTROLS

AIR PURIFICATION SCHEDULE

GPS MODEL	QUANTITY*	VOLTAGE	WATTS	MOUNTING LOCATION	MIN ION DENSITY(IONS/CC)	NOTES
GPS-FC	1 PER MINI INDOOR UNIT OR INDOOR SPLIT UNIT	208	5	IHP	20 MILLION	1 TO 6

NOTES:
1. BASIS OF DESIGN: PHENOMENAL AIRE: APPROVED EQUALS BY GLOBAL PLASMA SOLUTIONS, ACTIVE AIR, AIRGENICS AND BIOXGEN SUBJECT TO SPECIFICATION COMPLIANCE.
2. MOUNT BI-POLAR ION GENERATOR WHERE INDICATED ON SCHEDULE.
3. IF CONTRACTOR SUBSTITUTES BASIS OF DESIGN WITH ANOTHER MANUFACTURER, CONTRACTOR SHALL COORDINATE ALL ELECTRICAL AND MECHANICAL CHANGES.
4. BI-POLAR IONIZATION SYSTEMS REQUIRING PERISHABLE GLASS TUBES ARE NOT ACCEPTABLE.
5. ALL MANUFACTURER'S MUST PASS UL-867-2007 OZONE CHAMBER TESTING BY EITHER US OR ETL.
6. PROVIDE GPS-FC-2 FOR CEILING CASSETTES AND HORIZONTAL ABOVE CEILING UNITS AND GPS-FC-48 FOR VERTICAL UNITS OR EQUAL.

* PROVIDE FOR ALL INDOOR SPLITS AND MINI SPLITS.

CONDENSING UNIT SCHEDULE

TYPE: AIR COOLED CONDENSING UNIT.

NOTES:

1. CAPACITY TO BALANCE RESPECTIVE INDOOR AC UNIT.
2. CAPACITY BASED ON 95 degF AMBIENT.
3. UL LISTED, AHRI CERTIFIED, ASHRAE 90.1-2007 COMPLIANT.
4. REFRIGERANT CIRCUIT ACCESS PORTS LOCATED OUTDOORS SHALL BE FITTED WITH LOCKING-TYPE TAMPER-RESISTANT CAPS. ANY ACCESS DEVICE REQUIRED SHALL BE LEFT ON SITE WITH THE OWNER AT PROJECT CLOSE OUT.

ACCESSORIES:

1. PHASE PROTECTION.
2. MICROPROCESSOR CONTROLS.
3. ISOLATION VALVES.
4. LIQUID LINE REFRIGERANT FILTER DRIER.
5. ANTI SHORT CYCLE TIMER.
6. LOW AMBIENT CONTROL DOWN TO 0 degF.
7. HAIL / VANDAL GUARDS.
8. THERMAL EXPANSION VALVE.
9. HOT GAS BYPASS WITH RAWAL DEVICE AT CONDENSING UNIT.

MARK	NOMINAL CAPACITY	ELECTRICAL					EER	WEIGHT (LBS)	BASIS OF DESIGN
		Voltage	PH	HZ	MCA	MOCP			
CU-1	6 Tons	280 V	3	60 Hz	22 A	30 A	12.0	315	Trane
CU-ALT	7.5 Tons	280 V	3	60 Hz	32 A	40 A	12.8	315	Trane

ERU CONTROL SEQUENCE:

OCCUPIED MODE:

THE UNIT CONTROLLER SHALL ENABLE THE ERU TO START. ALL POINTS SHOWN IN THE ERU DIAGRAM SHALL BE VIEWABLE AND CHANGEABLE IN THE UNIT CONTROLLER.

ON A CALL TO START, THE UNIT INTERNAL CONTROLLER SHALL OPEN THE OUTSIDE AIR DAMPER AND THE EXHAUST AIR DAMPER AND SHALL START THE OUTSIDE AIR FAN AND THE EXHAUST FAN SUBJECT TO THE FIRE ALARM INTERLOCK, SMOKE DETECTOR INTERLOCK AND HIGH STATIC PRESSURE CUT OUT.

(NEUTRAL AIR TEMPERATURE):
THE UNIT CONTOLLER SHALL STAGE ON THE DX COOLING CIRCUITS TO MAINTAIN THE COOLING COIL DISCHARGE AIR TEMPERATURE (54°F-ADJUSTABLE) AT THE DAT SENSOR. THE UNIT CONTROLLER SHALL STAGE THE HOT GAS REHEAT COIL TO MAINTAIN THE SUPPLY AIR TEMPERATURE OF 72°F (ADJ.) AT THE SAT SENSOR.

WHEN THE OUTSIDE AIR TEMPERATURE IS BELOW 55°F, THE UNIT CONTROLLER SHALL STAGE ON THE ELEC HEATER TO MAINTAIN THE SUPPLY AIR TEMPERATURE SET POINT OF 70°F (ADJ.) AT THE SAT SENSOR.

DEHUMIDIFICATION SCHEDULE:

UPON RISE IN SPACE HUMIDITY (ABOVE 60% RH), THE AC UNIT SHALL GO INTO FULL COOLING AND STAGE ON THE HOT GAS REHEAT COIL TO MAINTAIN A SPACE TEMPERATURE OF 74°F (ADJUSTABLE). UPON THE HUMIDITY FALLING BACK BELOW SETPOINT (55% RH) THE UNIT SHALL RETURN TO NORMAL OPERATION.

UNOCCUPIED MODE:

THE UNIT CONTROLLER SHALL RUN THE ERU SUPPLY FAN AND COOLING/HEATING AS REQUIRED TO MAINTAIN THE UNOCCUPIED COOLING, HEATING AND DEHUMIDIFICATION SET POINTS (85°F, 55°F, 60% RH - ALL ADJUSTABLE). DURING UNOCCUPIED MODE, INTERNAL, BY-PASS DAMPER SHALL OPEN AND INTAKE AND EXHAUST DAMPERS SHALL CLOSE.

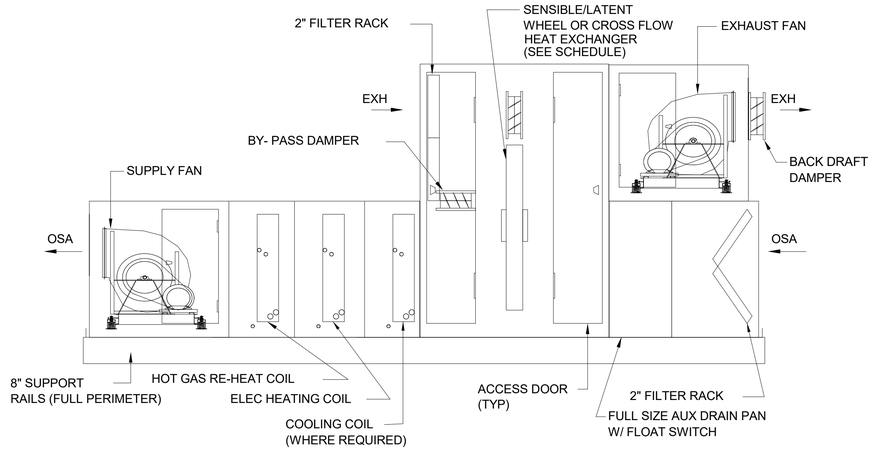

(SEE PLAN FOR EXACT UNIT CONFIGURATION)

ENERGY RECOVERY UNIT SCHEMATIC

NO SCALE

ENERGY RECOVERY UNIT

TYPE:
INDOOR, CONSTANT VOLUME, HORIZONTAL DRAW-THRU, WITH DX COOLING COIL, ELECTRIC HEAT, HOT GAS RE-HEAT COIL, FIXED, CROSS-FLOW ENERGY RECOVERY CORE, AND MATCHED CONDENSING UNIT.

NOTES:
1. COOLING CAPACITY IS NET CAPACITY @ 95°F AMBIENT.
2. UNIT SHALL BE ASHRAE 90.1 - 2013 COMPLIANT.
3. CKT 1: SPP
4. CKT 2: ELECTRIC HEAT

ACCESSORIES:
1. 2" THICK THROWAWAY FILTERS, MERV 13.
2. INVERTER DUTY RATED MOTORS
3. DIRECT DRIVE SUPPLY & EXHAUST FAN.
4. VARIABLE FREQUENCY DRIVE FOR SUPPLY & EXHAUST FAN.
5. HINGED ACCESS DOORS.
6. STAINLESS STEEL DRAIN PAN.
7. MARINE LIGHTS IN ALL SECTIONS.

COMPONENTS
1. INTAKE SECTION WITH OUTSIDE AIR CONNECTION WITH AUTO DAMPERS.
2. FILTER SECTION WITH ANGLED FILTERS.
3. ENERGY RECOVERY CORE SECTION.
4. ELECTRIC REHEAT SECTION.
5. DX COOLING COIL.
6. ACCESS SECTION.
7. DIRECT DRIVE PLENUM FAN IN SUPPLY FAN SECTION WITH HORIZONTAL DISCHARGE.
8. DIRECT DRIVE PLENUM FAN IN EXHAUST FAN SECTION WITH HORIZONTAL DISCHARGE.
9. BY-PASS DAMPER FOR UNOCCUPIED DEHUM

MARK	SUPPLY FAN			EXHAUST FAN			SUMMER			WINTER			ELECTRICAL					ELECTRIC HEAT KW	STAGES	DX COOLING COIL				WEIGHT (LBS)	ACCESSORIES	Model	BASIS OF DESIGN
	CFM	"W.G. E.S.P.	HP	CFM	"W.G. E.S.P.	HP	OUTSIDE AIR EAT (DB/WB)	OUTSIDE AIR LAT (DB/WB)	EXHAUST ENTERING (DB/WB)	OUTSIDE AIR EAT (DB/WB)	OUTSIDE AIR LAT (DB/WB)	EXHAUST ENTERING (DB/WB)	V	PH	Hz	MCA	MOCP			LAT (DB/WB)	TOTAL (MBH)	SENS (MBH)	NOM. TONS				
ERU-1	1120	1.5	2.0	995	1.0	1	95°F / 76°F	82.67°F / 72.66°F	75°F / 63°F	17°F / 15°F	41.84°F /31.16°F	70°F / 58°F	208 V	3	60	15.30 A / 43.8 A	20 A / 45 A	12	SCR	53.80°F / 53.68°F	70.0	35.49	6.0	2500	1,2,3,4,5,6,7,8,9	CSAA004	TRANE
ERU-ALT	1340	1.5	3.0	1215	1.5	1.5	95°F / 76°F	82.66°F / 72.66°F	75°F / 63°F	17°F / 15°F	41.83°F /31.16°F	70°F / 58°F	208 V	3	60	18.80 A / 47.41 A	25 A / 50 A	13	SCR	54.58°F / 54.16°F	82.0	41.3	7.5	2500	1,2,3,4,5,6,7,8,9	CSAA004	TRANE

NEW JROTC FACILITY FOR
PLEASANT GROVE HIGH SCHOOL
100 SPARTAN DRIVE, PLEASANT GROVE, AL 35127
JEFFERSON COUNTY BOARD OF EDUCATION



SHEET TITLE:
HVAC - CONTROLS AND DETAILS

PROJ. MGR.:	JWS
DRAWN:	RBG
DATE:	FEBRUARY 8, 2022
REVISIONS	

JOB NO. 21-66

SHEET NO:
M0.02
2 OF 7

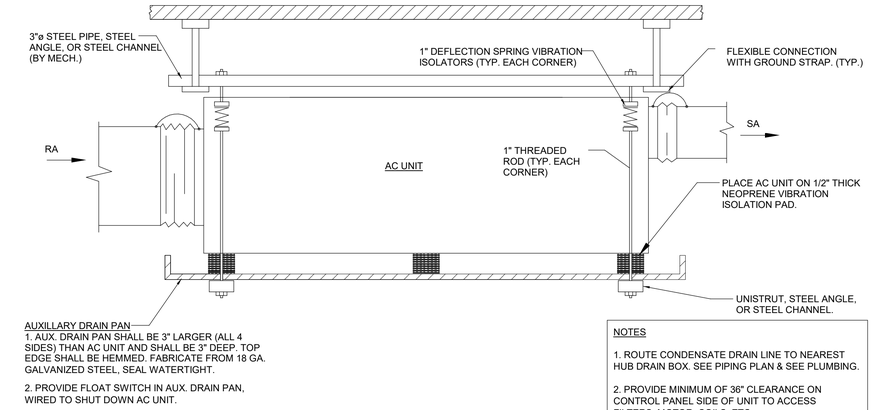

AC UNIT SUSPENDED FROM STRUCTURE

NO SCALE

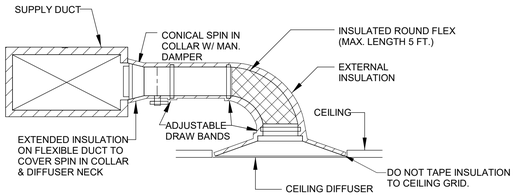

NOTE:
1. WHEREVER THE SUPPLY DUCT HEIGHT IS INSUFFICIENT TO CONNECT THE SPIN-IN, THE SPIN-IN MAY BE CONNECTED TO THE TOP OR BOTTOM OF THE DUCT. IF THE BRANCH DUCT MUST BE CONNECTED TO THE SIDE OF THE MAIN DUCT, USE A RECTANGULAR BRANCH DUCT CONNECTION OF EQUAL AIR VELOCITY AND TRANSITION TO ROUND DUCT. REFER TO SPECIFICATION FOR MAXIMUM TURNS IN FLEX DUCT.
2. PROVIDE EXTERNAL INSULATION ON ALL ROUND BRANCH DUCTWORK.SEE SPECS FOR THICKNESS AND EXTENT.
3. PROVIDE EXTERNAL INSULATION ON BACK SIDE OF CEILING DIFFUSERS. THICKNESS TO MATCH BRANCH DUCT INSULATION THICKNESS.

CEILING DIFFUSER INSTALLATION DETAIL

NO SCALE

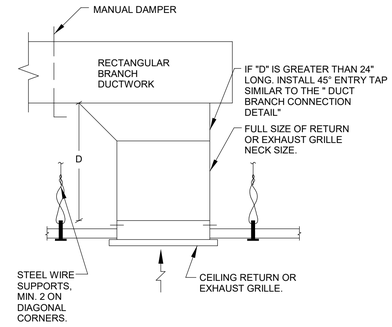

CEILING RETURN/EXHAUST BRANCH CONNECTION DETAIL

NO SCALE

EDMONDS Engineering
2 Riverchase Office Plaza
Suite 205
Hoover, AL 35244
(205) 988-2069
www.edmondsengineering.com
Project Number :
50149470

LATHAN ARCHITECTS
LATHAN · BRYANT · CALMA

NEW JROTC FACILITY FOR
PLEASANT GROVE HIGH SCHOOL
100 SPARTAN DRIVE, PLEASANT GROVE, AL 35127
JEFFERSON COUNTY BOARD OF EDUCATION

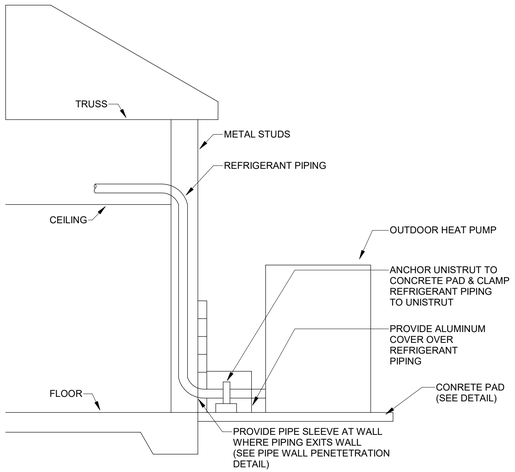

CONDENSING UNIT INSTALLATION DETAIL

NO SCALE

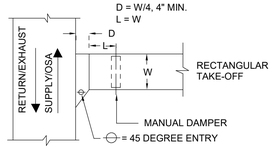

RECTANGULAR DUCT TAKE-OFF

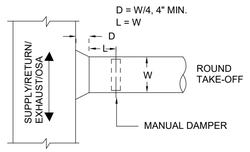

ROUND DUCT TAKE-OFF

DUCT TAKE-OFF CONNECTION DETAIL

NO SCALE

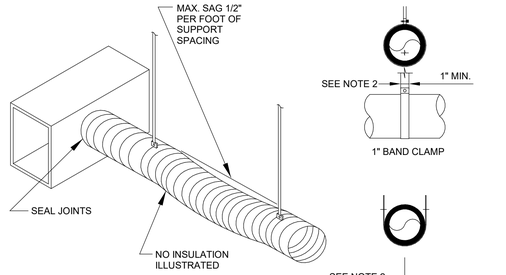

* DUCT SHOULD EXTEND STRAIGHT FOR TWO FEET FROM A CONNECTION BEFORE BENDING.

NOTES:
1. SUPPORT SYSTEM MUST NOT DAMAGE DUCT OR CAUSE OUT OF ROUND SHAPE.
2. DUCTS ARE FLEXIBLE WITH EXTERNAL INSULATION AND VAPOR BARRIER JACKETING.
3. MIN. CENTER LINE BEND LINE RADIUS IS ONE DIA. (OR INSIDE RADIUS OF D/2).
4. FLEXIBLE DUCT LENGTH SHALL NOT EXCEED 5 LINEAR FEET.

FLEXIBLE DUCT SUPPORT DETAIL

NO SCALE

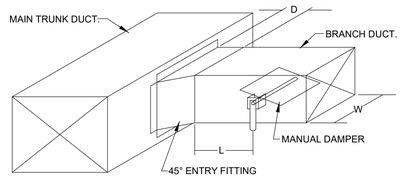

D = W/4, (4" MIN.)
L = W (WIDTH OF DUCT)

DUCT BRANCH CONNECTION

NO SCALE

MINIMUM CONDENSATE PIPE SIZE	
AC TONS	MIN. DRAIN SIZE
0 TO 20	1"
21 TO 40	1-1/4"
41 TO 60	1-1/2"
61 TO 100	2"
101 TO 250	3"
251 & LARGER	4"

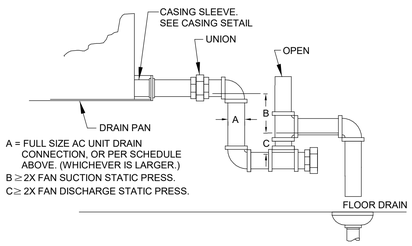

A = FULL SIZE AC UNIT DRAIN CONNECTION, OR PER SCHEDULE ABOVE. (WHICHEVER IS LARGER.)
B ≥ 2X FAN SUCTION STATIC PRESS.
C ≥ 2X FAN DISCHARGE STATIC PRESS.

AC UNIT DRAIN TRAP DETAIL

NO SCALE

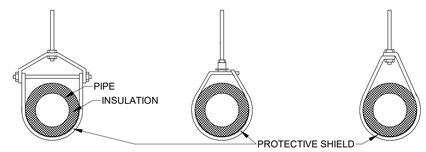

PIPE SIZE	1/2"	3/4"	1"	1 1/4"	1 1/2"	2"	2 1/2"	3"	4"	6"	8"	10"
ROD DIAMETER	3/8"	3/8"	3/8"	3/8"	3/8"	3/8"	3/8"	1/2"	5/8"	3/4"	7/8"	7/8"
SPACING	6'	8'	8'	8'	10'	10'	10'	10'	10'	10'	10'	10'

NOTE: LOCATE ADDITIONAL HANGERS AT VALVES AND AT CHANGES IN DIRECTION.

* SPACING FOR PIPE HANGERS FOR PIPE SIZES LARGER THAN 3" AND HUNG FROM BAR JOISES SHALL BE DETERMINED BY STRUCTURAL ENGINEER. SEE STRUCTURAL DRAWINGS AND SPECIFICATIONS.

PIPE HANGER DETAIL

NO SCALE

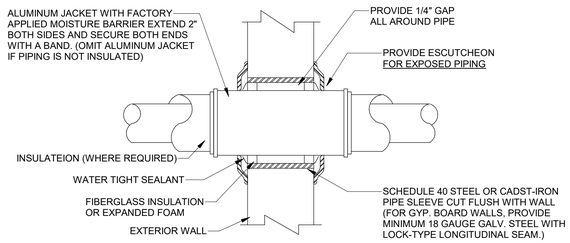

PIPE PENETRATION DETAIL

NO SCALE

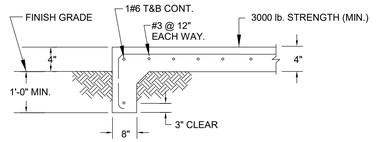

CONCRETE PAD DETAIL

NO SCALE

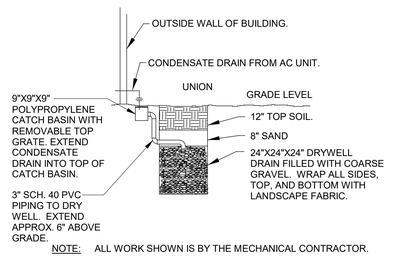

NOTE: ALL WORK SHOWN IS BY THE MECHANICAL CONTRACTOR.

DRY WELL DETAIL

NO SCALE

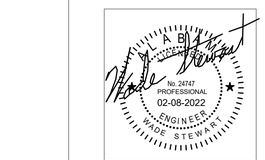

SHEET TITLE:
HVAC - DETAILS

PROJ. MGR.:	JWS
DRAWN:	RBG
DATE:	FEBRUARY 8, 2022
REVISIONS	

JOB NO. 21-66

SHEET NO:
M0.03
3 OF 7

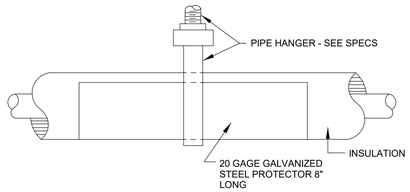

INSULATED LINES

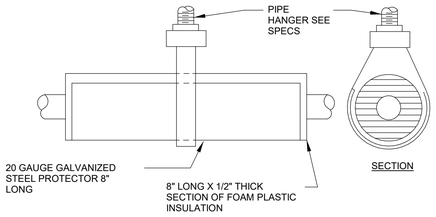

UNINSULATED LINES

REFRIGERANT PIPING HANGER DETAIL

NO SCALE

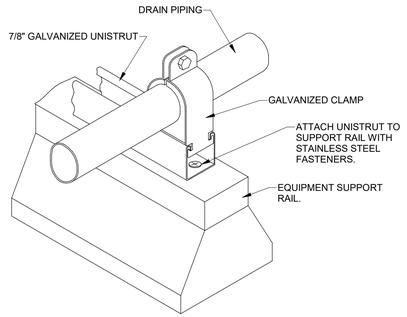

PIPING SUPPORT DETAIL

NO SCALE

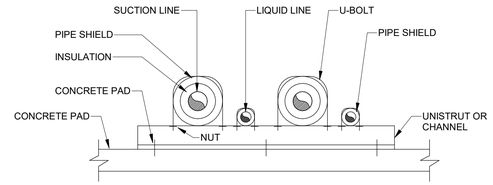

REFRIGERANT PIPE SUPPORT FROM CONCRETE PAD DETAIL

NO SCALE

Global Plasma Solutions
10 Mall Terrace, Building C
Savannah, GA 31406
Phone: (912) 356-0115 Fax: (912) 356-0114
Email: info@globalplasmasolutions.com Web: www.globalplasmasolutions.com
VERSION 1.5 running ASHRAE 62.1-2013

Zone Tag	Facility Type	Zone Use	Zone Floor Area (square ft) Az	Zone Max Occupancy Pz	Table 6.1 OA per Occupant Rp	Table 6.1 cfm/ft2 Ra	Pz * Rp Pz * Rp	Az * Ra Az * Ra	Table 6.2 Ventilation Effectiveness Ez	Outdoor Air to Zone (CFM) with Ez correction (Vbz/Ez)
101 - OPEN FITNESS & DRILL ROOM	Educational Facilities	Health Club/Aerobics Room	2,372.0	60.0	5.0	0.06	300	142	0.8	553 OA required per VRP

Zone Height (feet)	9
Desired Outside Air (Vo) IAQP	350
Supply Air (Vs)	1,760
Return Air (Vr)	1760
Recirc. Flow Factor (R)	0.80
Ventilation Effectiveness (Ez)	0.8
Level of Physical Activity	**Sedentary**
Filter Location	B
HVAC Flow Type	Constant
Outdoor Air Flow Type	Constant

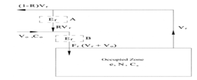

Air Changes Per Hour	4.9	VRP OA CFM per person	9.2
Outside Air Per VRP	553 CFM	IAQ OA CFM per person	5.8
Outside Air Per IAQ	350 CFM		
Outside Air Savings	203 CFM	Winter Heating Savings	
OA Summer Drybulb	96.0	OA Winter Design DB (F)	18
OA Summer Wetbulb	78.0	Supply Air DB Setpoint (F)	70
Coil Leaving Air Drybulb (F)	58.0	MBH Saved Winter	11.4
Coil Leaving Air Wetbulb (F)	57.7	KW Saved Winter	3.4
OA MBH Saved Summer*	#NAME?		
OA Tons Saved Summer*	#NAME?		

*OA = Outside Air
***OSHA, NIOSH & WHO most consevative values used
http://www.cdc.gov/niosh/npg/npgsyn-a.html

Indoor Contaminants Generated By People & From Outdoors	Maximum Threshold Value (PPM)	Steady State Using the VRP* (Prescribed OA) Plasma Off	Steady State Using the IAQ Method (Reduced OA) Plasma On	Is Steady State Level Acceptable at Reduced OA Levels?	Contaminant Generation Rate (PPM)	Filtration Effectiveness	Cognizant Authority***
Acetaldehyde	100.0	0.01113	0.00186	Yes	0.00032	50%	OSHA
Acetone	250.0	0.00185	0.00052	Yes	0.00433	50%	NIOSH
Ammonia	25.00	0.02100	0.01040	Yes	0.14210	50%	NIOSH
Benzene	1.0000	0.00252	0.00043	Yes	0.00015	50%	OSHA
2- Butanone (MEK)	200.0	0.00022	0.00008	Yes	0.00088	50%	NIOSH
Carbon dioxide**	5000	1521	2173	Yes	292	0%	NIOSH
Chloroform	2.0000	0.00011	0.00002	Yes	0.00003	50%	NIOSH
Dioxane	100.0	0.00000	0.00000	Yes	0.00000	50%	OSHA
Hydrogen Sulfide	10.0	0.00000	0.00000	Yes	0.00000	50%	NIOSH
Methane	NA	1.68094	1.68094	Yes	0.00000	0%	NA
Methanol	200.0	0.00000	0.00000	Yes	0.00000	0%	NIOSH
Methylene Chloride	25.0	0.00080	0.00017	Yes	0.00080	50%	OSHA
Propane	1000.0	0.00998	0.00998	Yes	0.00000	0%	NIOSH
Tetrachloroethane	5.0000	0.00000	0.00000	Yes	0.00000	50%	OSHA
Tetrachloroethylene	100.0000	0.00037	0.00006	Yes	0.00001	50%	OSHA
Toluene	100.0000	0.00534	0.00090	Yes	0.00021	50%	NIOSH
1,1,1 - Trichloroethane	350.0000	0.00079	0.00015	Yes	0.00038	50%	NIOSH
Xylene	100.0000	0.00230	0.00038	Yes	0.00000	50%	OSHA



1 = ASHRAE & NIOSH C02 Limit
2 = C02 Level at Ventilation Rate OA Flow Rate
3 = C02 Level at IAQ Procedure OA Flow Rate
**Carbon dioxide has been provided for reference only for gathering demand control ventilation (DCV) setpoints. The National Research Council was commissioned by the US Navy to prove C02 is not a contaminant of concern when using air purification to control the other contaminants of concern, as found on submarines.

Building materials and furnishings assumed to have no VOCs and off-gassing is complete
All yellow shaded boxes require user input or review

Is IAQ acceptable at reduced outside air levels? Yes

GLOBAL PLASMA SOLUTIONS INDOOR AIR QUALITY SOFTWARE©
COPYRIGHT 2008 GLOBAL PLASMA SOLUTIONS, LLC - ALL RIGHTS RESERVED
UNAUTHORIZED USE OR COPYING STRICTLY PROHIBITED

Global Plasma Solutions
10 Mall Terrace, Building C
Savannah, GA 31406
Phone: (912) 356-0115 Fax: (912) 356-0114
Email: info@globalplasmasolutions.com Web: www.globalplasmasolutions.com
VERSION 1.5 running ASHRAE 62.1-2013

Zone Tag	Facility Type	Zone Use	Zone Floor Area (square ft) Az	Zone Max Occupancy Pz	Table 6.1 OA per Occupant Rp	Table 6.1 cfm/ft2 Ra	Pz * Rp Pz * Rp	Az * Ra Az * Ra	Table 6.2 Ventilation Effectiveness Ez	Outdoor Air to Zone (CFM) with Ez correction (Vbz/Ez)
103 - SHOOTING RANGE	Educational Facilities	Conference/Meeting	1,036.0	9.0	5.0	0.06	45	62	0.8	134 OA required per VRP

Zone Height (feet)	9
Desired Outside Air (Vo) IAQP	45
Supply Air (Vs)	560
Return Air (Vr)	560
Recirc. Flow Factor (R)	0.80
Ventilation Effectiveness (Ez)	0.8
Level of Physical Activity	**Sedentary**
Filter Location	B
HVAC Flow Type	Constant
Outdoor Air Flow Type	Constant



Air Changes Per Hour	3.6	VRP OA CFM per person	14.9
Outside Air Per VRP	134 CFM	IAQ OA CFM per person	5.0
Outside Air Per IAQ	45 CFM		
Outside Air Savings	89 CFM	Winter Heating Savings	
OA Summer Drybulb	95.0	OA Winter Design DB (F)	18
OA Summer Wetbulb	78.0	Supply Air DB Setpoint (F)	70
Coil Leaving Air Drybulb (F)	58.0	MBH Saved Winter	5.0
Coil Leaving Air Wetbulb (F)	57.7	KW Saved Winter	1.5
OA MBH Saved Summer*	#NAME?		
OA Tons Saved Summer*	#NAME?		

*OA = Outside Air
***OSHA, NIOSH & WHO most consevative values used
http://www.cdc.gov/niosh/npg/npgsyn-a.html

Indoor Contaminants Generated By People & From Outdoors	Maximum Threshold Value (PPM)	Steady State Using the VRP* (Prescribed OA) Plasma Off	Steady State Using the IAQ Method (Reduced OA) Plasma On	Is Steady State Level Acceptable at Reduced OA Levels?	Contaminant Generation Rate (PPM)	Filtration Effectiveness	Cognizant Authority***
Acetaldehyde	100.0	0.01112	0.00094	Yes	0.00032	50%	OSHA
Acetone	250.0	0.00163	0.00029	Yes	0.00433	50%	NIOSH
Ammonia	25.00	0.01366	0.00609	Yes	0.14210	50%	NIOSH
Benzene	1.0000	0.00252	0.00022	Yes	0.00015	50%	OSHA
2- Butanone (MEK)	200.0	0.00018	0.00005	Yes	0.00088	50%	NIOSH
Carbon dioxide**	5000	1094	2469	Yes	292	0%	NIOSH
Chloroform	2.0000	0.00011	0.00001	Yes	0.00003	50%	NIOSH
Dioxane	100.0	0.00000	0.00000	Yes	0.00000	50%	OSHA
Hydrogen Sulfide	10.0	0.00000	0.00000	Yes	0.00000	50%	NIOSH
Methane	NA	1.68094	1.68094	Yes	0.00000	0%	NA
Methanol	200.0	0.00000	0.00000	Yes	0.00000	0%	NIOSH
Methylene Chloride	25.0	0.00076	0.00009	Yes	0.00080	50%	OSHA
Propane	1000.0	0.00998	0.00998	Yes	0.00000	0%	NIOSH
Tetrachloroethane	5.0000	0.00000	0.00000	Yes	0.00000	50%	OSHA
Tetrachloroethylene	100.0000	0.00037	0.00003	Yes	0.00001	50%	OSHA
Toluene	100.0000	0.00533	0.00045	Yes	0.00021	50%	NIOSH
1,1,1 - Trichloroethane	350.0000	0.00077	0.00008	Yes	0.00038	50%	NIOSH
Xylene	100.0000	0.00230	0.00019	Yes	0.00000	50%	OSHA

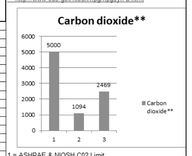

1 = ASHRAE & NIOSH C02 Limit
2 = C02 Level at Ventilation Rate OA Flow Rate
3 = C02 Level at IAQ Procedure OA Flow Rate
**Carbon dioxide has been provided for reference only for gathering demand control ventilation (DCV) setpoints. The National Research Council was commissioned by the US Navy to prove C02 is not a contaminant of concern when using air purification to control the other contaminants of concern, as found on submarines.

Building materials and furnishings assumed to have no VOCs and off-gassing is complete
All yellow shaded boxes require user input or review

Is IAQ acceptable at reduced outside air levels? Yes

GLOBAL PLASMA SOLUTIONS INDOOR AIR QUALITY SOFTWARE©
COPYRIGHT 2008 GLOBAL PLASMA SOLUTIONS, LLC - ALL RIGHTS RESERVED
UNAUTHORIZED USE OR COPYING STRICTLY PROHIBITED

Global Plasma Solutions
10 Mall Terrace, Building C
Savannah, GA 31406
Phone: (912) 356-0115 Fax: (912) 356-0114
Email: info@globalplasmasolutions.com Web: www.globalplasmasolutions.com
VERSION 1.5 running ASHRAE 62.1-2013

Zone Tag	Facility Type	Zone Use	Zone Floor Area (square ft) Az	Zone Max Occupancy Pz	Table 6.1 OA per Occupant Rp	Table 6.1 cfm/ft2 Ra	Pz * Rp Pz * Rp	Az * Ra Az * Ra	Table 6.2 Ventilation Effectiveness Ez	Outdoor Air to Zone (CFM) with Ez correction (Vbz/Ez)
109 - Corridor	Educational Facilities	Corridors	360.0	1.0	5.0	0.06	5	22	0.8	33 OA required per VRP

Zone Height (feet)	9
Desired Outside Air (Vo) IAQP	170
Supply Air (Vs)	636
Return Air (Vr)	636
Recirc. Flow Factor (R)	0.80
Ventilation Effectiveness (Ez)	0.8
Level of Physical Activity	**Sedentary**
Filter Location	B
HVAC Flow Type	Constant
Outdoor Air Flow Type	Constant



Air Changes Per Hour	11.8	VRP OA CFM per person	33.3
Outside Air Per VRP	33 CFM	IAQ OA CFM per person	170.0
Outside Air Per IAQ	170 CFM		
Outside Air Savings	-137 CFM	Winter Heating Savings	
OA Summer Drybulb	96.0	OA Winter Design DB (F)	18
OA Summer Wetbulb	78.0	Supply Air DB Setpoint (F)	70
Coil Leaving Air Drybulb (F)	58.0	MBH Saved Winter	-7.7
Coil Leaving Air Wetbulb (F)	57.7	KW Saved Winter	-2.3
OA MBH Saved Summer*	#NAME?		
OA Tons Saved Summer*	#NAME?		

*OA = Outside Air
***OSHA, NIOSH & WHO most consevative values used
http://www.cdc.gov/niosh/npg/npgsyn-a.html

Indoor Contaminants Generated By People & From Outdoors	Maximum Threshold Value (PPM)	Steady State Using the VRP* (Prescribed OA) Plasma Off	Steady State Using the IAQ Method (Reduced OA) Plasma On	Is Steady State Level Acceptable at Reduced OA Levels?	Contaminant Generation Rate (PPM)	Filtration Effectiveness	Cognizant Authority***
Acetaldehyde	100.0	0.00222	0.00037	Yes	0.00032	50%	OSHA
Acetone	250.0	0.00143	0.00027	Yes	0.00433	50%	NIOSH
Ammonia	25.00	0.00707	0.00076	Yes	0.14210	50%	NIOSH
Benzene	1.0000	0.00251	0.00050	Yes	0.00015	50%	OSHA
2- Butanone (MEK)	200.0	0.00013	0.00002	Yes	0.00088	50%	NIOSH
Carbon dioxide**	5000	711	463	Yes	292	0%	NIOSH
Chloroform	2.0000	0.00011	0.00002	Yes	0.00003	50%	NIOSH
Dioxane	100.0	0.00000	0.00000	Yes	0.00000	50%	OSHA
Hydrogen Sulfide	10.0	0.00000	0.00000	Yes	0.00000	50%	NIOSH
Methane	NA	1.68094	1.68094	Yes	0.00000	0%	NA
Methanol	200.0	0.00000	0.00000	Yes	0.00000	0%	NIOSH
Methylene Chloride	25.0	0.00072	0.00014	Yes	0.00080	50%	OSHA
Propane	1000.0	0.00998	0.00998	Yes	0.00000	0%	NIOSH
Tetrachloroethane	5.0000	0.00000	0.00000	Yes	0.00000	50%	OSHA
Tetrachloroethylene	100.0000	0.00037	0.00007	Yes	0.00001	50%	OSHA
Toluene	100.0000	0.00532	0.00106	Yes	0.00021	50%	NIOSH
1,1,1 - Trichloroethane	350.0000	0.00075	0.00015	Yes	0.00038	50%	NIOSH
Xylene	100.0000	0.00230	0.00046	Yes	0.00000	50%	OSHA



1 = ASHRAE & NIOSH C02 Limit
2 = C02 Level at Ventilation Rate OA Flow Rate
3 = C02 Level at IAQ Procedure OA Flow Rate
**Carbon dioxide has been provided for reference only for gathering demand control ventilation (DCV) setpoints. The National Research Council was commissioned by the US Navy to prove C02 is not a contaminant of concern when using air purification to control the other contaminants of concern, as found on submarines.

Building materials and furnishings assumed to have no VOCs and off-gassing is complete
All yellow shaded boxes require user input or review

Is IAQ acceptable at reduced outside air levels? Yes

GLOBAL PLASMA SOLUTIONS INDOOR AIR QUALITY SOFTWARE©
COPYRIGHT 2008 GLOBAL PLASMA SOLUTIONS, LLC - ALL RIGHTS RESERVED
UNAUTHORIZED USE OR COPYING STRICTLY PROHIBITED

Global Plasma Solutions
10 Mall Terrace, Building C
Savannah, GA 31406
Phone: (912) 356-0115 Fax: (912) 356-0114
Email: info@globalplasmasolutions.com Web: www.globalplasmasolutions.com
VERSION 1.5 running ASHRAE 62.1-2013

Zone Tag	Facility Type	Zone Use	Zone Floor Area (square ft) Az	Zone Max Occupancy Pz	Table 6.1 OA per Occupant Rp	Table 6.1 cfm/ft2 Ra	Pz * Rp Pz * Rp	Az * Ra Az * Ra	Table 6.2 Ventilation Effectiveness Ez	Outdoor Air to Zone (CFM) with Ez correction (Vbz/Ez)
114 - INTSTRUCTORS OFFICE	Educational Facilities	Conference/Meeting	154.0	1.0	5.0	0.06	5	9	0.8	18 OA required per VRP

Zone Height (feet)	9
Desired Outside Air (Vo) IAQP	160
Supply Air (Vs)	570
Return Air (Vr)	570
Recirc. Flow Factor (R)	0.80
Ventilation Effectiveness (Ez)	0.8
Level of Physical Activity	**Sedentary**
Filter Location	B
HVAC Flow Type	Constant
Outdoor Air Flow Type	Constant



Air Changes Per Hour	24.7	VRP OA CFM per person	17.8
Outside Air Per VRP	18 CFM	IAQ OA CFM per person	150.0
Outside Air Per IAQ	150 CFM		
Outside Air Savings	-132 CFM	Winter Heating Savings	
OA Summer Drybulb	95.0	OA Winter Design DB (F)	18
OA Summer Wetbulb	78.0	Supply Air DB Setpoint (F)	70
Coil Leaving Air Drybulb (F)	58.0	MBH Saved Winter	-7.5
Coil Leaving Air Wetbulb (F)	57.7	KW Saved Winter	-2.2
OA MBH Saved Summer*	#NAME?		
OA Tons Saved Summer*	#NAME?		

*OA = Outside Air
***OSHA, NIOSH & WHO most consevative values used
http://www.cdc.gov/niosh/npg/npgsyn-a.html

Indoor Contaminants Generated By People & From Outdoors	Maximum Threshold Value (PPM)	Steady State Using the VRP* (Prescribed OA) Plasma Off	Steady State Using the IAQ Method (Reduced OA) Plasma On	Is Steady State Level Acceptable at Reduced OA Levels?	Contaminant Generation Rate (PPM)	Filtration Effectiveness	Cognizant Authority***
Acetaldehyde	100.0	0.01111	0.00220	Yes	0.00032	50%	OSHA
Acetone	250.0	0.00157	0.00026	Yes	0.00433	50%	NIOSH
Ammonia	25.00	0.01170	0.00081	Yes	0.14210	50%	NIOSH
Benzene	1.0000	0.00251	0.00050	Yes	0.00015	50%	OSHA
2- Butanone (MEK)	200.0	0.00016	0.00002	Yes	0.00088	50%	NIOSH
Carbon dioxide**	5000	981	471	Yes	292	0%	NIOSH
Chloroform	2.0000	0.00011	0.00002	Yes	0.00003	50%	NIOSH
Dioxane	100.0	0.00000	0.00000	Yes	0.00000	50%	OSHA
Hydrogen Sulfide	10.0	0.00000	0.00000	Yes	0.00000	50%	NIOSH
Methane	NA	1.68094	1.68094	Yes	0.00000	0%	NA
Methanol	200.0	0.00000	0.00000	Yes	0.00000	0%	NIOSH
Methylene Chloride	25.0	0.00075	0.00014	Yes	0.00080	50%	OSHA
Propane	1000.0	0.00998	0.00998	Yes	0.00000	0%	NIOSH
Tetrachloroethane	5.0000	0.00000	0.00000	Yes	0.00000	50%	OSHA
Tetrachloroethylene	100.0000	0.00037	0.00007	Yes	0.00001	50%	OSHA
Toluene	100.0000	0.00532	0.00105	Yes	0.00021	50%	NIOSH
1,1,1 - Trichloroethane	350.0000	0.00076	0.00015	Yes	0.00038	50%	NIOSH
Xylene	100.0000	0.00230	0.00046	Yes	0.00000	50%	OSHA

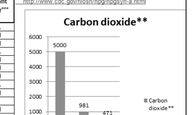

1 = ASHRAE & NIOSH C02 Limit
2 = C02 Level at Ventilation Rate OA Flow Rate
3 = C02 Level at IAQ Procedure OA Flow Rate
**Carbon dioxide has been provided for reference only for gathering demand control ventilation (DCV) setpoints. The National Research Council was commissioned by the US Navy to prove C02 is not a contaminant of concern when using air purification to control the other contaminants of concern, as found on submarines.

Building materials and furnishings assumed to have no VOCs and off-gassing is complete
All yellow shaded boxes require user input or review

Is IAQ acceptable at reduced outside air levels? Yes

GLOBAL PLASMA SOLUTIONS INDOOR AIR QUALITY SOFTWARE©
COPYRIGHT 2008 GLOBAL PLASMA SOLUTIONS, LLC - ALL RIGHTS RESERVED
UNAUTHORIZED USE OR COPYING STRICTLY PROHIBITED

EDMONDS Engineering
2 Riverchase Office Plaza
Suite 205
Hoover, AL 35244
(205) 988-2069
www.edmondsengineering.com

Project Number :
50149470

LATHAN ARCHITECTS
LATHAN · BRYANT · CALMA

NEW JROTC FACILITY FOR PLEASANT GROVE HIGH SCHOOL

100 SPARTAN DRIVE, PLEASANT GROVE, AL 35127
JEFFERSON COUNTY BOARD OF EDUCATION



SHEET TITLE:
HVAC - DETAILS & OSA CALCULATIONS

PROJ. MGR.:	JWS
DRAWN:	RBG
DATE:	FEBRUARY 8, 2022
REVISIONS	

JOB NO. 21-66

SHEET NO:

M0.04

4 OF 7

Global Plasma Solutions

10 Mall Terrace, Building C
Savannah, GA 31406
Phone: (912) 356-0115 Fax: (912) 356-0114
Email: info@globalplasmasolutions.com Web: www.globalplasmasolutions.com
VERSION 1.5 running ASHRAE 62.1-2013

Zone Tag	Facility Type	Zone Use	Zone Floor Area (square ft) Az	Zone Max Occupancy Pz	Table 6.1 OA per Occupant Rp	Table 6.1 cfm/ft2 Ra	Pz * Rp Pz * Rp	Az * Ra Az * Ra	Table 6.2 Ventilation Effectiveness Ez	Outdoor Air to Zone (CFM) with Ez correction (Vbz/Ez)
115 - CADET BATTALION STAFF HQ	Educational Facilities	Conference/Meeting	202.0	2.0	5.0	0.06	10	12	0.8	28 OA required per VRP

Zone Height (feet)	9	Air Changes Per Hour	18.8	VRP OA CFM per person	13.8
Desired Outside Air (Vo) IAQP	10	Outside Air Per VRP	28 CFM	IAQ OA CFM per person	5.0
Supply Air (Vs)	570	Outside Air Per IAQ	10 CFM		
Return Air (Vr)	570	Outside Air Savings	18 CFM	Winter Heating Savings	
Recirc. Flow Factor (R)	0.80	OA Summer Drybulb	95.0	OA Winter Design DB (F)	18
Ventilation Effectiveness (Ez)	0.8	OA Summer Wetbulb	78.0	Supply Air DB Setpoint (F)	70
Level of Physical Activity	**Sedentary**	Coil Leaving Air Drybulb (F)	58.0	MBH Saved Winter	1.0
Filter Location	B	Coil Leaving Air Wetbulb (F)	57.7	KW Saved Winter	0.3
HVAC Flow Type	Constant	OA MBH Saved Summer*	#NAME?		
Outdoor Air Flow Type	Constant	OA Tons Saved Summer*	#NAME?		

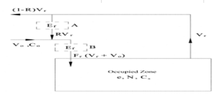

*OA = Outside Air
***OSHA, NIOSH & WHO most conservative values used
http://www.cdc.gov/niosh/npg/npgsyn-a.html

Indoor Contaminants Generated By People & From Outdoors	Maximum Threshold Value (PPM)	Steady State Using the VRP* (Prescribed OA) Plasma Off	Steady State Using the IAQ Method (Reduced OA) Plasma On	Is Steady State Level Acceptable at Reduced OA Levels?	Contaminant Generation Rate (PPM)	Filtration Effectiveness	Cognizant Authority***
Acetaldehyde	100.0	0.01112	0.00024	Yes	0.00032	50%	OSHA
Acetone	250.0	0.00165	0.00007	Yes	0.00433	50%	NIOSH
Ammonia	25.00	0.01457	0.00153	Yes	0.14210	50%	NIOSH
Benzene	1.0000	0.00252	0.00005	Yes	0.00015	50%	OSHA
2- Butanone (MEK)	200.0	0.00018	0.00001	Yes	0.00088	50%	NIOSH
Carbon dioxide**	5000	1147	2469	Yes	292	0%	NIOSH
Chloroform	2.0000	0.00011	0.00000	Yes	0.00003	50%	NIOSH
Dioxane	100.0	0.00000	0.00000	Yes	0.00000	50%	OSHA
Hydrogen Sulfide	10.0	0.00000	0.00000	Yes	0.00000	50%	NIOSH
Methane	NA	1.68094	1.68094	Yes	0.00000	0%	NA
Methanol	200.0	0.00000	0.00000	Yes	0.00000	0%	NIOSH
Methylene Chloride	25.0	0.00076	0.00002	Yes	0.00080	50%	OSHA
Propane	1000.0	0.00998	0.00998	Yes	0.00000	0%	NIOSH
Tetrachloroethane	5.0000	0.00000	0.00000	Yes	0.00000	50%	OSHA
Tetrachloroethylene	100.0000	0.00037	0.00001	Yes	0.00001	50%	OSHA
Toluene	100.0000	0.00533	0.00011	Yes	0.00021	50%	NIOSH
1,1,1 - Trichloroethane	350.0000	0.00077	0.00002	Yes	0.00038	50%	NIOSH
Xylene	100.0000	0.00230	0.00005	Yes	0.00000	50%	OSHA

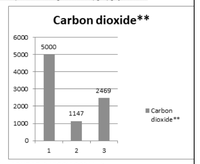

1 = ASHRAE & NIOSH C02 Limit
2 = C02 Level at Ventilation Rate OA Flow Rate
3 = C02 Level at IAQ Procedure OA Flow Rate
**Carbon dioxide has been provided for reference only for gathering demand control ventilation (DCV) setpoints. The National Research Council was commissioned by the US Navy to prove C02 is not a contaminant of concern when using air purification to control the other contaminants of concern, as found on submarines.

Building materials and furnishings assumed to have no VOCs and off-gassing is complete
All yellow shaded boxes require user input or review

Is IAQ acceptable at reduced outside air levels? Yes

GLOBAL PLASMA SOLUTIONS INDOOR AIR QUALITY SOFTWARE©
COPYRIGHT 2008 GLOBAL PLASMA SOLUTIONS, LLC - ALL RIGHTS RESERVED
UNAUTHORIZED USE OR COPYING STRICTLY PROHIBITED

Global Plasma Solutions

10 Mall Terrace, Building C
Savannah, GA 31406
Phone: (912) 356-0115 Fax: (912) 356-0114
Email: info@globalplasmasolutions.com Web: www.globalplasmasolutions.com
VERSION 1.5 running ASHRAE 62.1-2013

Zone Tag	Facility Type	Zone Use	Zone Floor Area (square ft) Az	Zone Max Occupancy Pz	Table 6.1 OA per Occupant Rp	Table 6.1 cfm/ft2 Ra	Pz * Rp Pz * Rp	Az * Ra Az * Ra	Table 6.2 Ventilation Effectiveness Ez	Outdoor Air to Zone (CFM) with Ez correction (Vbz/Ez)
116 - Instruction	Educational Facilities	Classrooms (AGE 9 +)	360.0	22.0	5.0	0.12	110	43	0.8	192 OA required per VRP

Zone Height (feet)	9	Air Changes Per Hour	15.0	VRP OA CFM per person	8.7
Desired Outside Air (Vo) IAQP	110	Outside Air Per VRP	192 CFM	IAQ OA CFM per person	5.0
Supply Air (Vs)	812	Outside Air Per IAQ	110 CFM		
Return Air (Vr)	812	Outside Air Savings	82 CFM	Winter Heating Savings	
Recirc. Flow Factor (R)	0.80	OA Summer Drybulb	95.0	OA Winter Design DB (F)	18
Ventilation Effectiveness (Ez)	0.8	OA Summer Wetbulb	78.0	Supply Air DB Setpoint (F)	70
Level of Physical Activity	**Sedentary**	Coil Leaving Air Drybulb (F)	58.0	MBH Saved Winter	4.6
Filter Location	B	Coil Leaving Air Wetbulb (F)	57.7	KW Saved Winter	1.3
HVAC Flow Type	Constant	OA MBH Saved Summer*	#NAME?		
Outdoor Air Flow Type	Constant	OA Tons Saved Summer*	#NAME?		

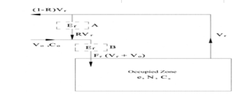

*OA = Outside Air
***OSHA, NIOSH & WHO most conservative values used
http://www.cdc.gov/niosh/npg/npgsyn-a.html

Indoor Contaminants Generated By People & From Outdoors	Maximum Threshold Value (PPM)	Steady State Using the VRP* (Prescribed OA) Plasma Off	Steady State Using the IAQ Method (Reduced OA) Plasma On	Is Steady State Level Acceptable at Reduced OA Levels?	Contaminant Generation Rate (PPM)	Filtration Effectiveness	Cognizant Authority***
Acetaldehyde	100.0	0.01113	0.00142	Yes	0.00032	50%	OSHA
Acetone	250.0	0.00188	0.00043	Yes	0.00433	50%	NIOSH
Ammonia	25.00	0.02213	0.00921	Yes	0.14210	50%	NIOSH
Benzene	1.0000	0.00253	0.00033	Yes	0.00015	50%	OSHA
2- Butanone (MEK)	200.0	0.00023	0.00007	Yes	0.00088	50%	NIOSH
Carbon dioxide**	5000	1587	2469	Yes	292	0%	NIOSH
Chloroform	2.0000	0.00111	0.00001	Yes	0.00003	50%	NIOSH
Dioxane	100.0	0.00000	0.00000	Yes	0.00000	50%	OSHA
Hydrogen Sulfide	10.0	0.00000	0.00000	Yes	0.00000	50%	NIOSH
Methane	NA	1.68094	1.68094	Yes	0.00000	0%	NA
Methanol	200.0	0.00000	0.00000	Yes	0.00000	0%	NIOSH
Methylene Chloride	25.0	0.00081	0.00014	Yes	0.00080	50%	OSHA
Propane	1000.0	0.00998	0.00998	Yes	0.00000	0%	NIOSH
Tetrachloroethane	5.0000	0.00000	0.00000	Yes	0.00000	50%	OSHA
Tetrachloroethylene	100.0000	0.00037	0.00005	Yes	0.00001	50%	OSHA
Toluene	100.0000	0.00534	0.00068	Yes	0.00021	50%	NIOSH
1,1,1 - Trichloroethane	350.0000	0.00079	0.00012	Yes	0.00038	50%	NIOSH
Xylene	100.0000	0.00230	0.00029	Yes	0.00000	50%	OSHA

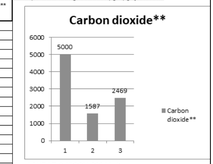

1 = ASHRAE & NIOSH C02 Limit
2 = C02 Level at Ventilation Rate OA Flow Rate
3 = C02 Level at IAQ Procedure OA Flow Rate
**Carbon dioxide has been provided for reference only for gathering demand control ventilation (DCV) setpoints. The National Research Council was commissioned by the US Navy to prove C02 is not a contaminant of concern when using air purification to control the other contaminants of concern, as found on submarines.

Building materials and furnishings assumed to have no VOCs and off-gassing is complete
All yellow shaded boxes require user input or review

Is IAQ acceptable at reduced outside air levels? Yes

GLOBAL PLASMA SOLUTIONS INDOOR AIR QUALITY SOFTWARE©
COPYRIGHT 2008 GLOBAL PLASMA SOLUTIONS, LLC - ALL RIGHTS RESERVED
UNA+B7 L5SUTHORIZED USE OR COPYING STRICTLY PROHIBITED

Global Plasma Solutions

10 Mall Terrace, Building C
Savannah, GA 31406
Phone: (912) 356-0115 Fax: (912) 356-0114
Email: info@globalplasmasolutions.com Web: www.globalplasmasolutions.com
VERSION 1.5 running ASHRAE 62.1-2013

Zone Tag	Facility Type	Zone Use	Zone Floor Area (square ft) Az	Zone Max Occupancy Pz	Table 6.1 OA per Occupant Rp	Table 6.1 cfm/ft2 Ra	Pz * Rp Pz * Rp	Az * Ra Az * Ra	Table 6.2 Ventilation Effectiveness Ez	Outdoor Air to Zone (CFM) with Ez correction (Vbz/Ez)
117 - Instruction	Educational Facilities	Classrooms (AGE 9 +)	360.0	22.0	5.0	0.12	110	43	0.8	192 OA required per VRP

Zone Height (feet)	9	Air Changes Per Hour	15.0	VRP OA CFM per person	8.7
Desired Outside Air (Vo) IAQP	110	Outside Air Per VRP	192 CFM	IAQ OA CFM per person	5.0
Supply Air (Vs)	812	Outside Air Per IAQ	110 CFM		
Return Air (Vr)	812	Outside Air Savings	82 CFM	Winter Heating Savings	
Recirc. Flow Factor (R)	0.80	OA Summer Drybulb	95.0	OA Winter Design DB (F)	18
Ventilation Effectiveness (Ez)	0.8	OA Summer Wetbulb	78.0	Supply Air DB Setpoint (F)	70
Level of Physical Activity	**Sedentary**	Coil Leaving Air Drybulb (F)	58.0	MBH Saved Winter	4.6
Filter Location	B	Coil Leaving Air Wetbulb (F)	57.7	KW Saved Winter	1.3
HVAC Flow Type	Constant	OA MBH Saved Summer*	#NAME?		
Outdoor Air Flow Type	Constant	OA Tons Saved Summer*	#NAME?		

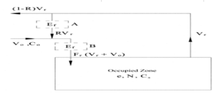

*OA = Outside Air
***OSHA, NIOSH & WHO most conservative values used
http://www.cdc.gov/niosh/npg/npgsyn-a.html

Indoor Contaminants Generated By People & From Outdoors	Maximum Threshold Value (PPM)	Steady State Using the VRP* (Prescribed OA) Plasma Off	Steady State Using the IAQ Method (Reduced OA) Plasma On	Is Steady State Level Acceptable at Reduced OA Levels?	Contaminant Generation Rate (PPM)	Filtration Effectiveness	Cognizant Authority***
Acetaldehyde	100.0	0.01113	0.00142	Yes	0.00032	50%	OSHA
Acetone	250.0	0.00188	0.00043	Yes	0.00433	50%	NIOSH
Ammonia	25.00	0.02213	0.00921	Yes	0.14210	50%	NIOSH
Benzene	1.0000	0.00253	0.00033	Yes	0.00015	50%	OSHA
2- Butanone (MEK)	200.0	0.00023	0.00007	Yes	0.00088	50%	NIOSH
Carbon dioxide**	5000	1587	2469	Yes	292	0%	NIOSH
Chloroform	2.0000	0.00111	0.00001	Yes	0.00003	50%	NIOSH
Dioxane	100.0	0.00000	0.00000	Yes	0.00000	50%	OSHA
Hydrogen Sulfide	10.0	0.00000	0.00000	Yes	0.00000	50%	NIOSH
Methane	NA	1.68094	1.68094	Yes	0.00000	0%	NA
Methanol	200.0	0.00000	0.00000	Yes	0.00000	0%	NIOSH
Methylene Chloride	25.0	0.00081	0.00014	Yes	0.00080	50%	OSHA
Propane	1000.0	0.00998	0.00998	Yes	0.00000	0%	NIOSH
Tetrachloroethane	5.0000	0.00000	0.00000	Yes	0.00000	50%	OSHA
Tetrachloroethylene	100.0000	0.00037	0.00005	Yes	0.00001	50%	OSHA
Toluene	100.0000	0.00534	0.00068	Yes	0.00021	50%	NIOSH
1,1,1 - Trichloroethane	350.0000	0.00079	0.00012	Yes	0.00038	50%	NIOSH
Xylene	100.0000	0.00230	0.00029	Yes	0.00000	50%	OSHA

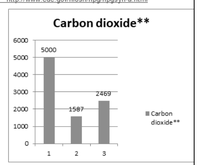

1 = ASHRAE & NIOSH C02 Limit
2 = C02 Level at Ventilation Rate OA Flow Rate
3 = C02 Level at IAQ Procedure OA Flow Rate
**Carbon dioxide has been provided for reference only for gathering demand control ventilation (DCV) setpoints. The National Research Council was commissioned by the US Navy to prove C02 is not a contaminant of concern when using air purification to control the other contaminants of concern, as found on submarines.

Building materials and furnishings assumed to have no VOCs and off-gassing is complete
All yellow shaded boxes require user input or review

Is IAQ acceptable at reduced outside air levels? Yes

GLOBAL PLASMA SOLUTIONS INDOOR AIR QUALITY SOFTWARE©
COPYRIGHT 2008 GLOBAL PLASMA SOLUTIONS, LLC - ALL RIGHTS RESERVED
UNAUTHORIZED USE OR COPYING STRICTLY PROHIBITED

EDMONDS Engineering
2 Riverchase Office Plaza
Suite 205
Hoover, AL 35244
(205) 988-2069
www.edmondsengineering.com

Project Number :
50149470

LATHAN ARCHITECTS
LATHAN · BRYANT · CALMA

NEW JROTC FACILITY FOR PLEASANT GROVE HIGH SCHOOL

100 SPARTAN DRIVE, PLEASANT GROVE, AL 35127
JEFFERSON COUNTY BOARD OF EDUCATION



SHEET TITLE:
HVAC - OSA CALCULATIONS

PROJ. MGR.:	JWS
DRAWN:	RBG
DATE:	FEBRUARY 8, 2022
REVISIONS	

JOB NO. 21-66

SHEET NO:

M0.05

5 OF 7

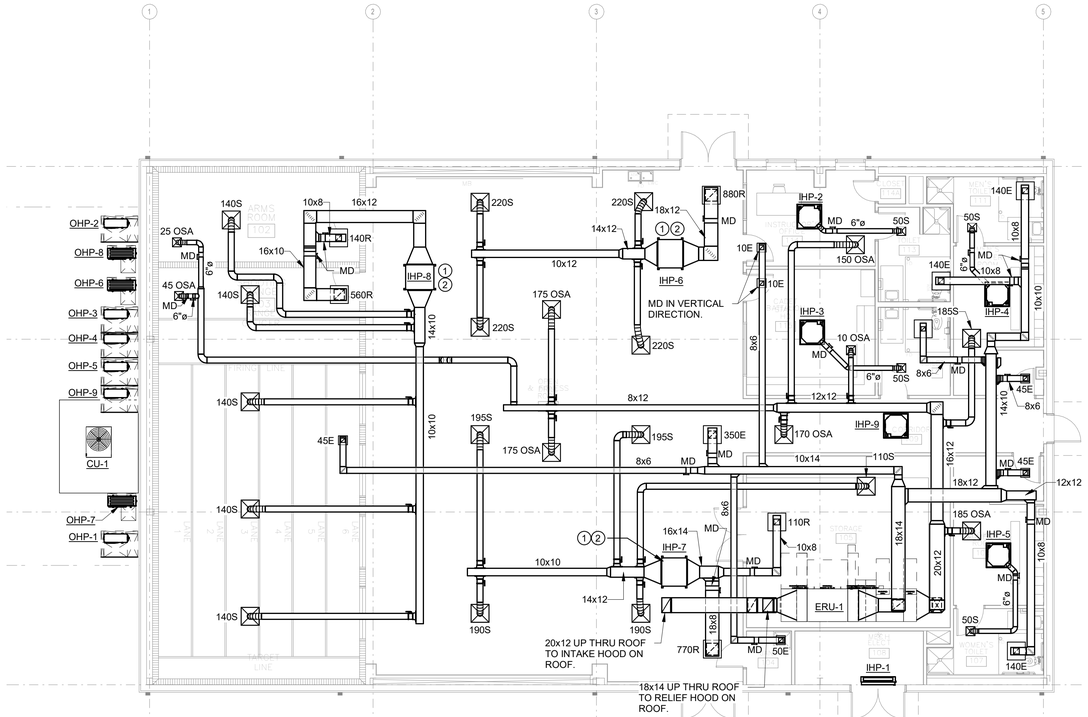

1 HVAC - FLOOR PLAN
1/8" = 1'-0"

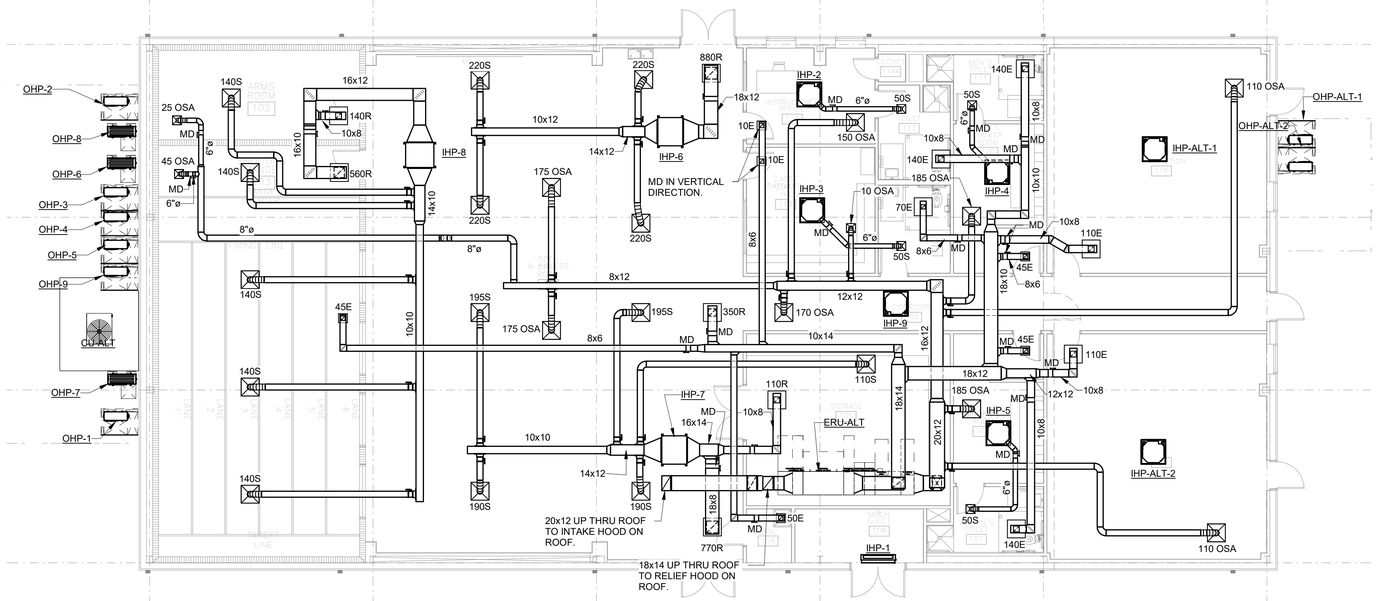

2 HVAC - FLOOR PLAN - ALT
1/8" = 1'-0"

KEYED NOTES

1. SUSPEND UNIT FROM STRUCTURE ABOVE WITH SPRING VIBRATION ISOLATORS, PROVIDE SHEETMETAL DRAIN PAN, MINIMUM 18 GAUGE, 3" LARGER ON ALL SIDES WITH ALL SEAMS SEALED WATER TIGHT.
2. HANG FROM STRUCTURE ABOVE.
3. 20x12 UP TO ABOVE CEILING.

EDMONDS Engineering
2 Riverchase Office Plaza
Suite 205
Hoover, AL 35244
(205) 988-2069
www.edmondsengineering.com
Project Number :
50149470

LATHAN ARCHITECTS
LATHAN · BRYANT · CALMA

NEW JROTC FACILITY FOR PLEASANT GROVE HIGH SCHOOL

100 SPARTAN DRIVE, PLEASANT GROVE, AL 35127
JEFFERSON COUNTY BOARD OF EDUCATION

ALABAMA REGISTERED No. 24747 PROFESSIONAL ENGINEER WADE STEWART 02-08-2022

SHEET TITLE:
HVAC - FLOOR PLANS

PROJ. MGR.:	JWS
DRAWN:	RBG
DATE:	FEBRUARY 8, 2022
REVISIONS	

JOB NO. 21-66

SHEET NO:
M1.01
6 OF 7

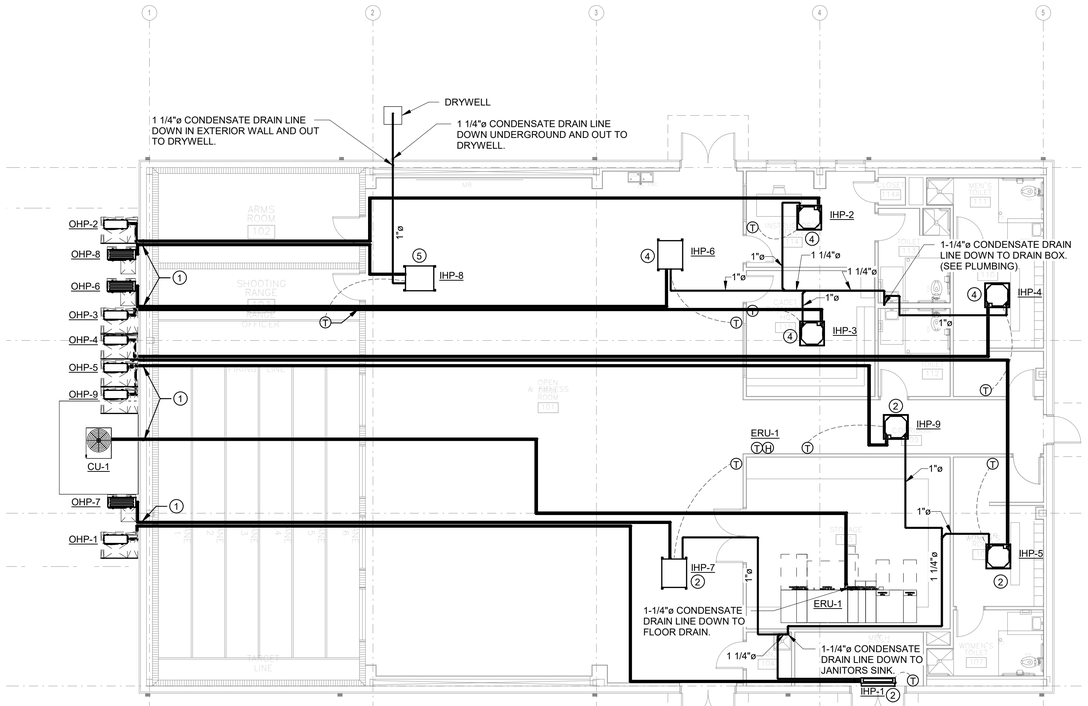

1 PIPING - FLOOR PLAN

1/8" = 1'-0"

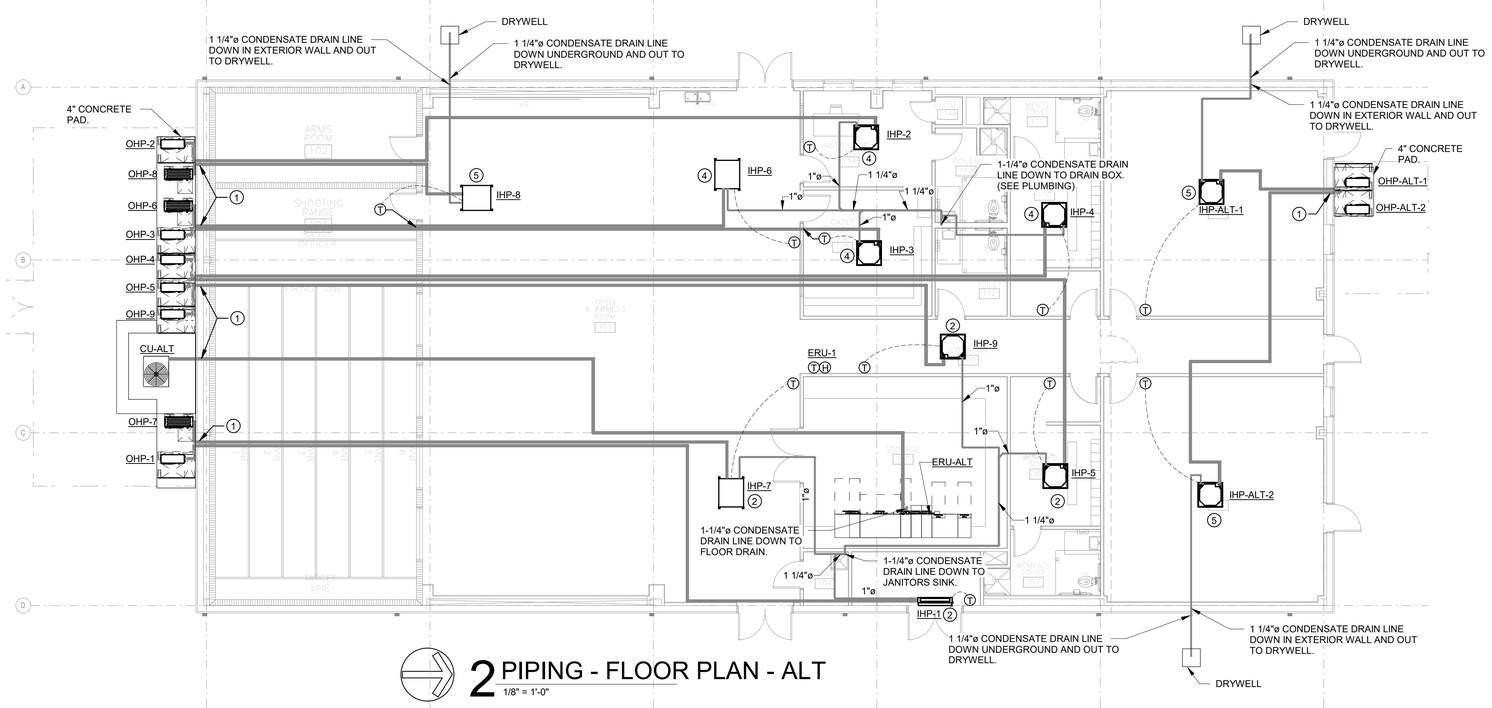

2 PIPING - FLOOR PLAN - ALT

1/8" = 1'-0"

GENERAL NOTES
1. ROUTE REFRIGERANT LINES TO BE ROUTED AS HIGH AS POSSIBLE. SIZE LINES AS DIRECTED BY THE MANUFACTURER'S.
2. ROUTE CONDENSATE DRAIN LINE AS HIGH AS POSSIBLE . SIZE LINES AS DIRECTED BY THE MANUFACTURER'S.
3. ROUTE REFRIGERANT LINES AND CONDENSATE DRAIN LINES SUCH THAT THEY ARE MINIMUM 16" OFF WALL CORNERS, INTERSECTIONS, AND OPENINGS. DO NOT ROUTE PIPING OVER OPENING JAMBS. - SEE STRUCTURAL FOR ALL PENETRATION REQUIREMENTS.
4. ALL INDIVIDUAL UNIT CONDENSATE DRAIN LINES TO TIE INTO TOP OF RESPECTIVE DRAIN HEADERS.

KEYED NOTES
(1) ROUTE REFRIGERANT LINES AS HIGH AS POSSIBLE TO BRANCH CONTROLLER UNIT. SIZE LINES AS DIRECTED BY THE MANUFACTURER'S.
(2) ROUTE CONDENSATE DRAIN LINES AS HIGH AS POSSIBLE TO JANITORS SINK.
(3) 1-1/4"ø DOWN TO FLOOR DRAIN. (SEE PLUMBING)
(4) ROUTE CONDENSATE DRAIN LINE AS HIGH AS POSSIBLE TO DRAIN BOX. (SEE PLUMBING FOR DRAIN BOX LOCATION)
(5) ROUTE CONDENSATE DRAIN LINES AS HIGH AS POSSIBLE TO EXTERIOR WALL AND DOWN AND OUT TO DRYWELL.

EDMONDS Engineering
2 Riverchase Office Plaza
Suite 205
Hoover, AL 35244
(205) 988-2069
www.edmondsengineering.com
Project Number :
50149470

LATHAN ARCHITECTS
LATHAN · BRYANT · CALMA

NEW JROTC FACILITY FOR PLEASANT GROVE HIGH SCHOOL

100 SPARTAN DRIVE, PLEASANT GROVE, AL 35127

JEFFERSON COUNTY BOARD OF EDUCATION

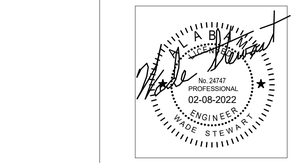

SHEET TITLE:
PIPING - FLOOR PLANS

PROJ. MGR.:	JWS
DRAWN:	RBG
DATE:	FEBRUARY 8, 2022
REVISIONS	

JOB NO. 21-66

SHEET NO:

M2.01

7 OF 7

LIGHTING FIXTURE SCHEDULE

MARK	MANUFACTURER	CATALOG NO.	LAMPS			MOUNTING HEIGHT	TYPE MOUNTING	RECESS DEPTH	REMARKS
			NO.	WATTS	TYPE				
A	METALUX	24CGT5535C	FURNISHED WITH FIXTURE			CEILING	RECESSED	2-1/8"	
A (EM)	METALUX	24CGT5535C-EL14W	FURNISHED WITH FIXTURE			CEILING	RECESSED	2-1/8"	SEE NOTE 1
B	METALUX	24CGT4535C	FURNISHED WITH FIXTURE			CEILING	RECESSED	2-1/8"	
B (EM)	METALUX	24CGT4535C-EL14W	FURNISHED WITH FIXTURE			CEILING	RECESSED	2-1/8"	SEE NOTE 1
C	PATHWAY LIGHTING	6VLFL2X-3000-35K-DA-6VLEDMD-SCLPF	FURNISHED WITH FIXTURE			CEILING	RECESSED	6"	
D	METALUX	ISW-E02-LED-E1-BL4-BZ-TR	FURNISHED WITH FIXTURE			+9'	BRACKET		
D (EM)	METALUX	ISW-E02-LED-E1-BL4-BZ-TR-BBB	FURNISHED WITH FIXTURE			+9'	BRACKET		SEE NOTE 1
S	HALO	SLD405-8-35-WH-UNV	FURNISHED WITH FIXTURE			CEILING	RECESSED	1.5"	
X	SURE-LITES	LPX-7-G-120	FURNISHED WITH FIXTURE			℄ ABOVE DOOR	BRACKET		

NOTES:
1. FEED ALL "EM" FIXTURES WITH SWITCHED AND UNSWITCHED HOT LEGS. UNSWITCHED HOT LEG IS USED FOR VOLTAGE SENSING.
2. VERIFY ALL FIXTURE COLORS WITH ARCHITECT PRIOR TO SUBMITTALS.
3. EQUAL FIXTURES BY LITHONIA, LUMAX, AND COLUMBIA WILL BE CONSIDERED APPROVED EQUALS.

GENERAL NOTES

1. SERVICE TO BUILDING IS 120/208 VOLTS, 3 PHASE, 4 WIRE.
2. VERIFY ALL DOOR SWINGS WITH ARCHITECTURAL DRAWINGS BEFORE ROUGHING IN SWITCHES.
3. VERIFY EXACT LOCATION OF ALL MOTORS AND EQUIPMENT BEFORE ROUGHING IN.
4. CONTRACTOR TO VERIFY LOCATION OF ALL OUTLETS PRIOR TO INSTALLATION.
5. THE ELECTRICAL CONTRACTOR SHALL VERIFY THE EXACT LOCATION OF COUNTERTOPS AND BACKSPLASHES ON ARCHITECTURAL DETAILS AND/OR CASEWORK SHOP DRAWINGS AND ADJUST SPECIFIED MOUNTING HEIGHT OF WALL OUTLETS AS REQUIRED TO AVOID CONFLICTS.
6. CONTRACTOR WILL CHECK ALL LIGHTING FIXTURES FOR EXACT TYPE MOUNTING AND SPACE REQUIRED BEFORE ROUGHING IN.
7. FURNISH AND INSTALL PLASTER FRAMES FOR ALL RECESSED FIXTURES AS REQUIRED.
8. SUPPORT OF ALL LIGHTING FIXTURES TO BE THE RESPONSIBILITY OF THIS CONTRACTOR. FIXTURES TO BE SUPPORTED INDEPENDENT OF CEILING FROM STRUCTURAL MEMBERS OF THE BUILDING.
9. ELECTRICAL CONTRACTOR MUST CHECK THE CORRESPONDING MECHANICAL SHEETS AND BE RESPONSIBLE FOR INCLUDING PROPER SERVICE AND CONNECTIONS TO ALL MECHANICAL ITEMS SHOWN THEREON REGARDLESS OF ITS BEING OR NOT BEING SHOWN ON ELECTRICAL SHEETS.
10. ALL CONDUIT CONCEALED UNLESS SPECIFICALLY SHOWN EXPOSED.
11. COORDINATE SERVICES WITH POWER AND COMMUNICATIONS COMPANIES. REMOVE OR RELOCATE ALL POWER AND COMMUNICATIONS CIRCUITS ABOVE OR BELOW GRADE THAT WOULD OBSTRUCT THE CONSTRUCTION OF THE PROJECT OR CONFLICT IN ANY MANNER WITH COMPLETION OF THE PROJECT OR ANY CODE PERTAINING THERETO. IF UTILITY COMPANY REQUIREMENTS ARE AT VARIANCE WITH THESE DRAWINGS AND SPECIFICATIONS, THE CONTRACT PRICE SHALL INCLUDE THE ADDITIONAL COST.
12. IT IS INTENDED THAT SPECIFICATIONS AND PLANS SHALL INCLUDE EVERYTHING REQUIRED AND NECESSARY FOR PROPER AND COMPLETE INSTALLATION OF THE COMPLETE SYSTEMS SHOWN EVEN THOUGH EVERY ITEM MAY NOT BE PARTICULARLY MENTIONED IN DETAIL. THE CONTRACTOR SHALL DELIVER TO OTHER TRADES ANY EQUIPMENT THAT MUST BE INSTALLED DURING CONSTRUCTION. CONTRACTOR SHALL BE RESPONSIBLE FOR FIELD MEASUREMENTS AND COORDINATION OF THE PHYSICAL SIZE OF ALL EQUIPMENT WITH THE ARCHITECTURAL REQUIREMENTS OF THE SPACES INTO WHICH THE EQUIPMENT WILL BE INSTALLED.
13. THIS CONTRACTOR SHALL INSTALL EQUIPMENT GROUNDS THROUGHOUT THIS PROJECT, USING GREEN INSULATED GROUND WIRE. USE OF CONDUIT AS THE ONLY GROUND CONDUCTOR WILL NOT BE ALLOWED. (SIZE GROUND WIRES PER N.E.C.)
14. REMOVE ALL EXISTING PANELBOARDS, DISCONNECTS, FIXTURES, RECEPTACLES, AUXILIARY SYSTEM DEVICES, CONDUIT, CONDUCTORS, ETC. BEING RENDERED OBSOLETE BY THIS PROJECT.
15. WHERE EXISTING REMAINING CIRCUITS ARE BEING INTERRUPTED DUE TO STRUCTURAL AND/OR DESIGN CHANGES, THIS CONTRACTOR WILL EXTEND EXISTING CIRCUITS AS REQUIRED TO MAINTAIN CIRCUIT CONTINUITY TO REMAINING ACTIVE DEVICES.

ELECTRICAL SYMBOLS

(A)a1	CEILING OUTLET – FIXTURE "A", CIRCUIT 1, SWITCH a.
	CEILING OUTLET – FLUORESCENT FIXTURE.
	CEILING OUTLET – FLUORESCENT INDUSTRIAL OR STRIP TYPE.
H	WALL OUTLET – INCANDESCENT BRACKET TYPE.
	WALL OUTLET – FLUORESCENT BRACKET TYPE.
	WALL OUTLET – DUPLEX OUTLET, 20A, 125V, GROUNDED, PASS & SEYMOUR PT5362A-GRY WITH PT6STR PLUG TAIL CONNECTOR.
	WALL OUTLET – DUPLEX OUTLET, 20A, 125V, GROUNDED, PASS & SEYMOUR PT5362A-GRY WITH PT6STR PLUG TAIL CONNECTOR – MOUNT AT 6" ABOVE COUNTER.
	WALL OUTLET – SINGLE OUTLET, 30A, 125/250V, 4W, HUBBELL #HBL9430A RECEPTACLE.
GFCI	WALL OUTLET – DUPLEX OUTLET, 20A, 125V, GROUNDED, PASS & SEYMOUR PT2095-GRY WITH PT6STR PLUG TAIL CONNECTOR.
WP GFCI	WALL OUTLET – DUPLEX OUTLET, 20A, 125V, GROUNDED, WEATHERPROOF, PASS & SEYMOUR PT2095-GRY WITH PT6STR PLUG TAIL CONNECTOR. INSTALL #WUC10-CAGV WEATHERPROOF COVER.
•	FLOOR OUTLET – CONDUIT STUB UP.
J	CEILING OUTLET – JUNCTION BOX.
J	WALL OUTLET – JUNCTION BOX WITH FLEXIBLE CONNECTION TO EQUIPMENT.
$	SWITCH OUTLET – AC TYPE, SINGLE POLE, 20A, 120/277V, HUBBELL #1221 – GREY.("N" DENOTES NARROW)
$D	SWITCH OUTLET – FLUORESCENT DIMMER – LUTRON NOVA-T SERIES #NTF-103P.
$2	SWITCH OUTLET – AC TYPE, TWO POLE, 20A, 120/277V, HUBBELL #1222 – GREY.
$3	SWITCH OUTLET – AC TYPE, THREE WAY, 20A, 120/277V, HUBBELL #1223 – GREY.
$4	SWITCH OUTLET – AC TYPE, FOUR WAY, 20A, 120/277V, HUBBELL #1224 – GREY.
$M	SWITCH MANUAL MOTOR STARTER, SINGLE POLE WITH OVERLOAD PROTECTION.
$P	SWITCH OUTLET – AC TYPE, SINGLE POLE, 20A, 120/277V, HUBBELL #12211LC.
	LIGHTING PANEL – SEE SPECIFICATIONS AND SCHEDULE.
	POWER PANELS – SEE SPECIFICATIONS AND SCHEDULE.
	BRANCH CIRCUIT CONCEALED IN WALL OR CEILING.
	BRANCH CIRCUIT CONCEALED IN FLOOR OR GROUND.
	HOMERUN TO PANELBOARD – ANY CIRCUIT WITHOUT FURTHER DESIGNATION 2 # 12 & 1 # 12(G) – 1/2" CONDUIT. 3 # 12 & 1 # 12(G) – 3/4" CONDUIT. 4 # 12 & 1 # 12(G) – 3/4" CONDUIT.
E	EMPTY CONDUIT – 3/4".
	BRANCH CIRCUIT EXPOSED.
◦	CONDUIT RUN DOWN WALLS, CONCEALED
•	CONDUIT RUN UP WALLS, CONCEALED
(S)	MOTOR SHOWN 5hp (TYPICAL) OR (20) 40 AMPS (TYPICAL).
(F)	EXHAUST FAN MOTOR – FRACTIONAL HORSEPOWER.
	MAGNETIC MOTOR STARTER.
	NON-FUSED DISCONNECT SWITCH. (RT – RAINTIGHT).
	FUSED DISCONNECT SWITCH.
A.F.F.	ABOVE FINISHED FLOOR.
VER.	VERIFY LOCATION.
N.E.C.	NATIONAL ELECTRICAL CODE.
GFCI	GROUND FAULT CIRCUIT INTERRUPTER
WP	WEATHER PROOF
IG	ISOLATED GROUND
	FIRE ALARM – SMOKE DETECTOR – SEE SPEC.
H	FIRE ALARM – HEAT DETECTOR – SEE SPEC.
F	FIRE ALARM – MANUAL PULL STATION – SEE SPEC.
F	FIRE ALARM – STROBE LIGHT – SEE SPEC.
S	FIRE ALARM – SPEAKER STROBE – SEE SPEC.
FACP	FIRE ALARM CONTROL PANEL – EXISTING – SEE SPEC.
	COMPUTER OUTLET – 3/4" CONDUIT WITH CABLING-SEE SPEC.
	COMPUTER OUTLET – 3/4" CONDUIT WITH CABLING-MOUNT 6" ABOVE COUNTER-SEE SPEC.
C	FUTURE CAMERA LOCATION – CONTRACTOR SHALL SUPPLY AND INSTALL 1 CAT 6 CABLE CONNECTED TO MDF/IDF RACK (IN 3/4" CONDUIT WHEN NOT ABOVE CEILING). CAMERAS WILL BE ADDED BY OWNER IN THE FUTURE. CONTRACTOR SHALL ONLY INSTALL CABLE AND LEAVE AT LOCATION AS REQUIRED.
$MS	WALL SWITCH WITH BUILT IN MOTION SENSOR – COOPER #OSW-P-0451-W WITH WALL PLATE
$OR	LIGHTING CONTROL PANEL OVERRIDE SWITCH – DIGITA 5-1B
S.S.C.	MASTER INTERCOM SOUND CONSOLE – EXISTING – SEE SPEC.
S	SOUND SYSTEM – CEILING MOUNTED SPEAKER – SEE SPEC.
	SOUND SYSTEM – CALL-IN SWITCH – SEE SPEC.
S	SOUND SYSTEM – WIRING – SEE SPEC.

FIRE ALARM SYSTEM NOTES

1. PROVIDE FIRE ALARM COMPLETION DOCUMENTS AT THE STATE FINAL INSPECTION. THIS ITEM WILL BE REQUIRED BY STATE BUILDING INSPECTOR AT THE TIME OF FINAL INSPECTION (OLD CERTIFICATION FORM).
2. ADDITIONS AND ALTERATIONS TO THE FIRE ALARM SYSTEM REQUIRE TESTING, A RECORD OF COMPLETION, AND RECERTIFICATION. ALL FIRE ALARM WORK SHALL BE PERFORMED BY QUALIFIED PERSONNEL AS DEFINED IN NFPA-72 (2013) 10.4.2, 10.5.2, AND 10.18.1.
3. ALL WORK SHALL BE PERFORMED BY A CERTIFIED FIRE ALARM CONTRACTOR – SEE SPECS.

COLOR CODE FOR JUNCTION BOXES

NOTE:
PAINT ALL JUNCTION BOXES AND COVERS WITH COLORS AS SHOWN BELOW. PAINTING COVERS ONLY IS NOT ACCEPTABLE.

FUNCTION:	COLOR:
LIGHTING	BLUE
POWER	GREEN
FIRE ALARM	RED

COLOR CODE FOR DATA CABLING

NOTE:
ALL DATA CABLING SHALL BE COLORED AS FOLLOWS:

FUNCTION:	COLOR:
NORMAL DATA	BLUE
CAMERAS	YELLOW
ACCESS POINTS (WAP)	GREEN
ACCESS CONTROL (DOORS)	ORANGE

COLOR CODE FOR ELECTRICAL WIRING

1. 120/208 V, 60Hz, 3 PHASE, 4 WIRE SYSTEM
   PHASE A-BLACK
   B-RED
   C-BLUE
   N-WHITE
2. GROUND-GREEN

STEWART ENGINEERING
ELECTRICAL CONSULTANTS
P.O. Box 2233 (36202)
300 East 7th Street (36207)
Anniston, Alabama
Phone: 256/237-0891
Fax No.: 256/237-1077
Email: services@stewartengineering.org
Engineer:
J. Lance Junkin, P.E.
Alabama Reg. 14817

Project Number:
2205

LATHAN ARCHITECTS
LATHAN ▪ BRYANT ▪ CALMA

NEW JROTC FACILITY FOR
PLEASANT GROVE HIGH SCHOOL
100 SPARTIAN DRIVE, PLEASANT GROVE, AL 35127
JEFFERSON COUNTY BOARD OF EDUCATION

ALABAMA LICENSED PROFESSIONAL ENGINEER No. 14817 JEFFREY LANCE JUNKIN
2-1-22

SHEET TITLE:
SCHEDULES, SYMBOLS, AND NOTES

PROJ. MGR.: LANCE JUNKIN
DRAWN: SEC
DATE: FEBRUARY 1, 2022
REVISIONS

JOB NO. 21-66
SHEET NO:
E1.1
1 OF 5

PANELBOARD SCHEDULE

MARK	TYPE	MAINS			BRANCHES					LUG LOCATION	TYPE MOUNTING	AREA PANEL LOCATED	AVAILABLE FAULT CURRENT	REMARKS
		TYPE	AMPS	SERVICE	1 POLE	2 POLE	3 POLE	SPARES	SPACES					
MPA	I-LINE	M/B	600	120/208V 3ø, 4W		1-100	1-225 1-400		5-3PS	BOTTOM	SURFACE	ELEC 108	17,000	SEE NOTES 1, 2, 3, & 4
LPA	NQOD	LUGS	225	120/208V 3ø, 4W	32-20			6-20/1	16-1PS	BOTTOM	SURFACE	ELEC 108	15,000	SEE NOTES 1, 2, & 3 54 SPACE PANEL
PPA	NQOD	LUGS	400	120/208V 3ø, 4W	12-20	9-30 2-40	1-25 1-40 1-50	6-20/1	5-1PS	BOTTOM	SURFACE	ELEC 108	15,000	SEE NOTES 1, 2, & 3 54 SPACE PANEL

NOTES:
1. ALL PANELBOARDS SHALL BE CAPABLE OF WITHSTANDING AND INTERRUPTING THE AVAILABLE FAULT CURRENTS AS LISTED ABOVE.
2. ALL PANELBOARDS SHALL HAVE MICARTA LABELS SHOWING PANELBOARD DESIGNATION, AND OPERATING VOLTAGE. I-LINE PANELBOARDS SHALL ALSO HAVE MICARTA LABELS AT EACH BREAKER.
3. NO SERIES RATING WILL BE ALLOWED ON ANY PANELBOARDS.
4. SHALL BE RATED FOR SERVICE ENTRANCE EQUIPMENT.

PANELBOARD NOTES:
1. MANUFACTURER OF SWITCHBOARDS AND/OR PANELBOARDS SHALL PERFORM FAULT CURRENT CALCULATIONS, COORDINATION STUDY, AND ARC FLASH HAZARD ANALYSIS, AND LABEL ALL SWITCHBOARDS AND/OR PANELBOARDS, IN ACCORDANCE WITH NFPA 70E-2009 (ARTICLE 130) AND NFPA 70-2008 (ARTICLE 110.16).
2. CONTRACTOR SHALL FIELD MARK ELECTRICAL SERVICE EQUIPMENT WITH A CONSPICUOUS AND PERMANENT LABEL THAT INDICATES THE AVAILABLE FAULT CURRENT PER NEC 110.24.
3. CONTRACTOR SHALL FIELD MARK ELECTRICAL PANELS WITH A CONSPICUOUS AND PERMANENT LABEL THAT INDICATES WHERE PANELS ARE FED FROM PER NEC 408.4(B).

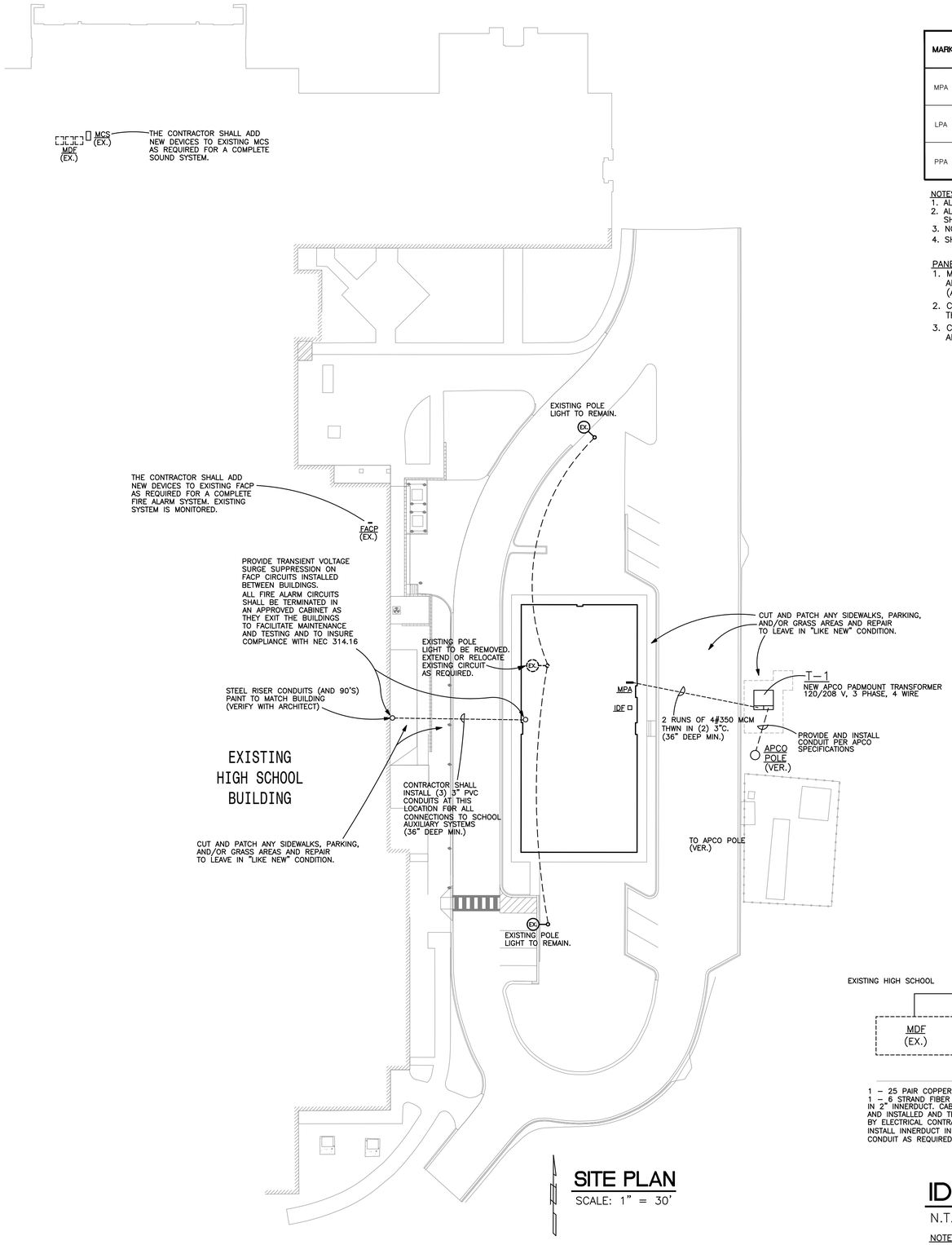

SITE PLAN
SCALE: 1" = 30'

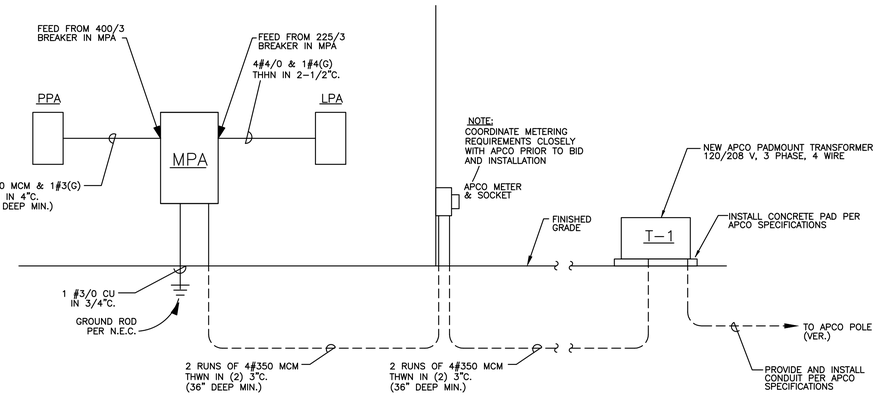

ELECTRICAL SINGLE LINE DIAGRAM
N.T.S.

APCO NOTES

1. CONTRACTOR SHALL COORDINATE CLOSELY WITH ALABAMA POWER, AND SHALL PROVIDE AND INSTALL ANY AND ALL LABOR AND/OR MATERIAL, AS REQUIRED BY ALABAMA POWER, REGARDLESS OF ITS BEING OR NOT BEING SHOWN ON ELECTRICAL DRAWINGS.
2. ANY AND ALL COSTS ASSOCIATED WITH PROVIDING THIS LABOR AND/OR MATERIAL SHALL BE INCLUDED IN BID PRICE.
3. CONTRACTOR SHALL OBTAIN ALL DIRECT CHARGES FROM ALABAMA POWER, AND INCLUDE THESE CHARGES IN BID PRICE. CONTRACTOR IS RESPONSIBLE FOR CONTACTING ALABAMA POWER DURING THE BID PROCESS.

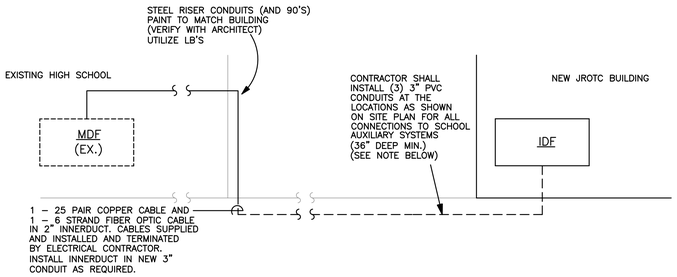

IDF FIBER OPTIC CABLE RISER DIAGRAM
N.T.S.

NOTE:
UTILIZE ONE OF THESE CONDUITS FOR DATA FIBER AND SOUND. USE ONE FOR FIRE ALARM AND ONE WILL BE A SPARE FOR FUTURE USE.

STEWART ENGINEERING
ELECTRICAL CONSULTANTS
P.O. Box 2233 (36202)
300 East 7th Street (36207)
Anniston, Alabama
Phone: 256/237-0891
Fax No.: 256/237-1077
Email: services@stewartengineering.org
Engineer:
J. Lance Junkin, P.E.
Alabama Reg. 14817
Project Number:
2205

LATHAN ARCHITECTS
LATHAN ▪ BRYANT ▪ CALMA

NEW JROTC FACILITY FOR PLEASANT GROVE HIGH SCHOOL
100 SPARTIAN DRIVE, PLEASANT GROVE, AL 35127
JEFFERSON COUNTY BOARD OF EDUCATION

ALABAMA LICENSED PROFESSIONAL ENGINEER JEFFREY LANCE JUNKIN 2-1-22

SHEET TITLE:
SITE PLAN AND SINGLE LINE DIAGRAM

PROJ. MGR.:	LANCE JUNKIN
DRAWN:	SEC
DATE:	FEBRUARY 1, 2022
REVISIONS	

JOB NO. 21-66
SHEET NO:
E2.1
2 OF 5

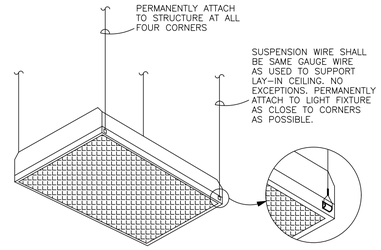

DETAIL - LIGHT FIXTURE SUPPORT

N.T.S.

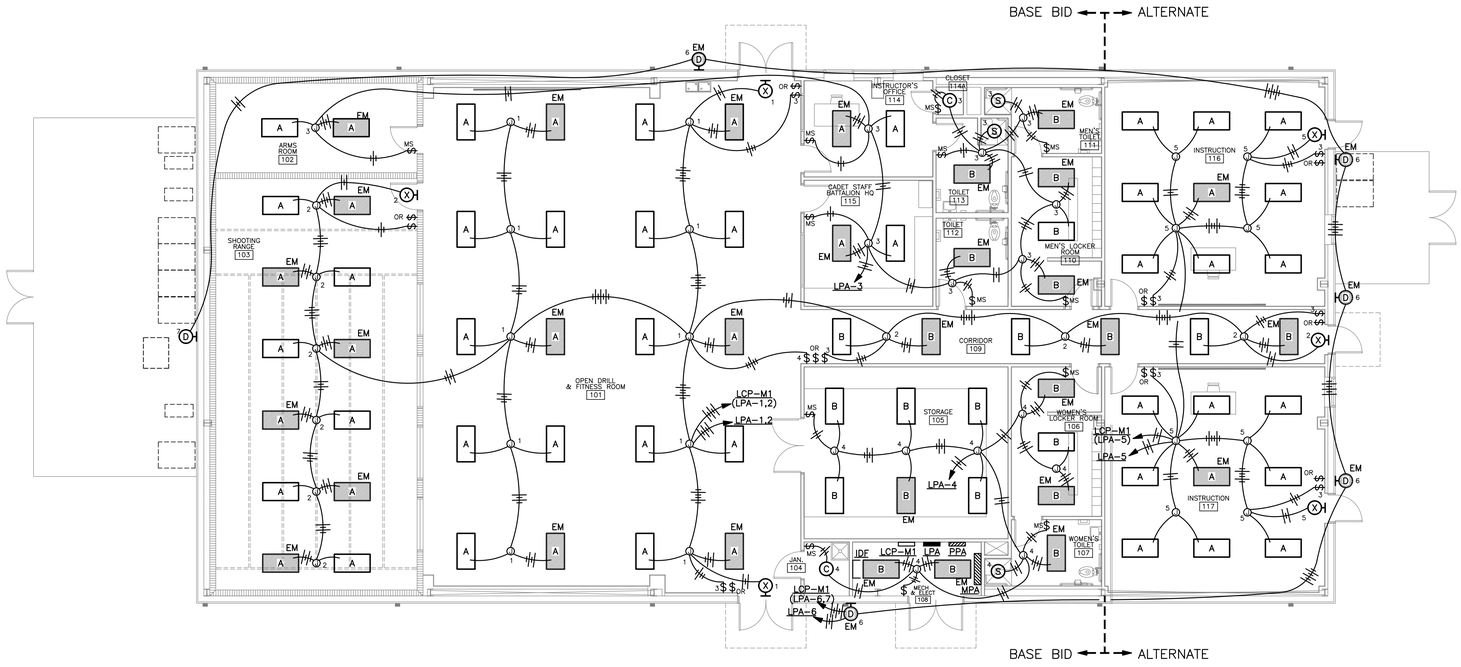

FLOOR PLAN - LIGHTING

SCALE: 1/8" = 1'-0"

NOTES:
1. ALL WIRING SHOWN FEEDING EXTERIOR FIXTURES SHALL BE #10 THHN.

RELAY PANEL LCP-M1

R	PANEL	CIRCUIT	PROGRAM MODE
1	LPA	1	NORMAL DAY-TO-DAY
2	LPA	2	NORMAL DAY-TO-DAY
3	LPA	5	NORMAL DAY-TO-DAY
4	LPA	6	EXTERIOR - DUSK TO DAWN
5	LPA	7	EXTERIOR - DUSK TO MIDN.
6			
7			
8			
9			
10			
11			
12			
13			
14			
15			
16			

COOPER GREENGATE RELAY CABINET (NETWORKABLE)
CONTROLKEEPER 16 (CKT16) WITH 16 RELAYS

SITE VISIT NOTE:
CONTRACTOR SHALL INCLUDE IN BID PRICE A TOTAL OF (3) SITE VISITS FROM FACTORY TRAINED REPRESENTATIVE FOR LIGHTING CONTROL SYSTEM INSTALLATION, PROGRAMMING, AND TRAINING.

STEWART ENGINEERING
ELECTRICAL CONSULTANTS

P.O. Box 2233 (36202)
300 East 7th Street (36207)
Anniston, Alabama
Phone: 256/237-0891
Fax No.: 256/237-1077
Email: services@stewartengineering.org

Engineer:
J. Lance Junkin, P.E.
Alabama Reg. 14817

Project Number:
2205

LATHAN ARCHITECTS
LATHAN ▪ BRYANT ▪ CALMA

NEW JROTC FACILITY FOR PLEASANT GROVE HIGH SCHOOL

100 SPARTIAN DRIVE, PLEASANT GROVE, AL 35127
JEFFERSON COUNTY BOARD OF EDUCATION

ALABAMA LICENSED PROFESSIONAL ENGINEER JEFFREY LANCE JUNKIN 14817 2-1-22

SHEET TITLE:
FLOOR PLAN - LIGHTING

PROJ. MGR.: LANCE JUNKIN
DRAWN: SEC
DATE: FEBRUARY 1, 2022
REVISIONS

JOB NO. 21-66
SHEET NO: E3.1
3 OF 5

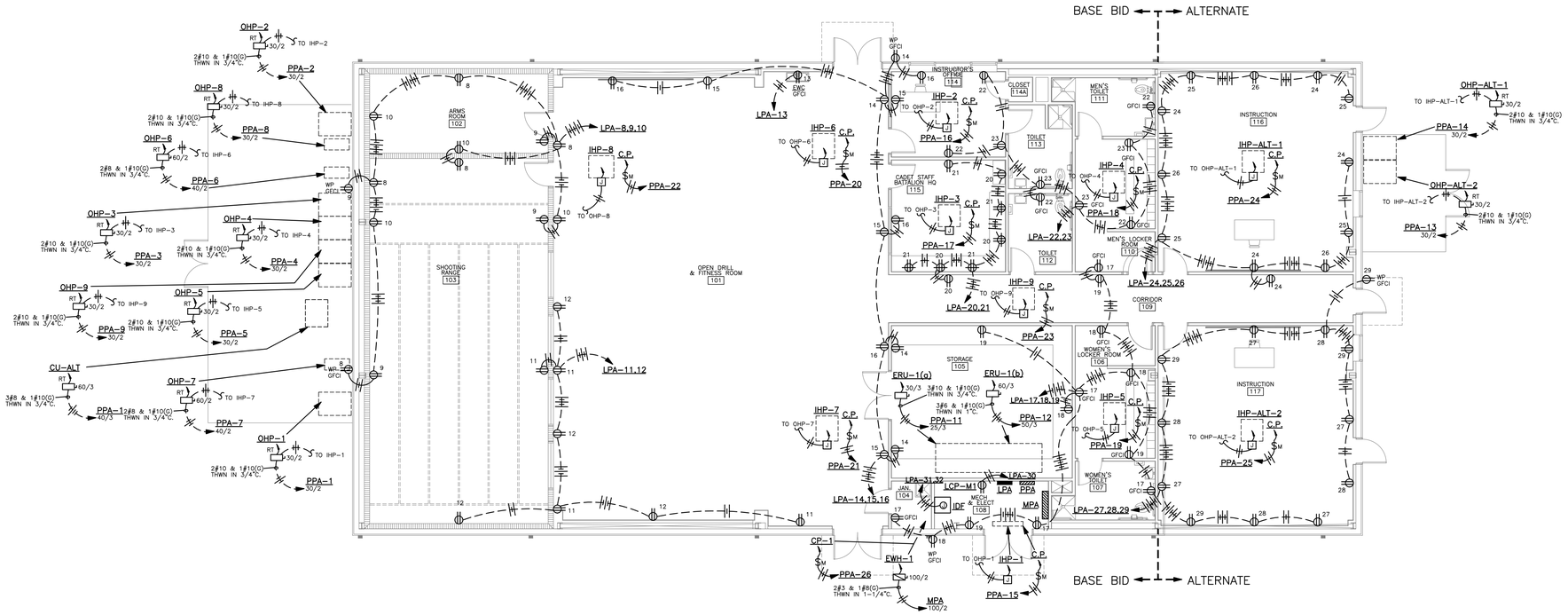

FLOOR PLAN - POWER

SCALE: 1/8" = 1'-0"

NOTES:

1. COORDINATE ALL OUTLETS AT COUNTER AREAS CLOSELY WITH ARCHITECTURAL CASEWORK DRAWINGS. PLACE OUTLETS BELOW COUNTERS, AT STANDARD MOUNTING HEIGHT, WHEN KNEE SPACE PERMITS ACCESS (COORDINATE INSTALLATION OF HOLES WITH RUBBER GROMMETS IN THOSE CASES).
2. COORDINATE INSTALLATION OF OUTLETS CLOSELY WITH FURNITURE SUPPLIER.
3. ALL BRANCH CIRCUIT HOME RUNS THAT EXCEED 100' IN LENGTH SHALL BE #10 THHN.

STEWART ENGINEERING
ELECTRICAL CONSULTANTS

P.O. Box 2233 (36202)
300 East 7th Street (36207)
Anniston, Alabama
Phone: 256/237-0891
Fax No.: 256/237-1077
Email: services@stewartengineering.org

Engineer:
J. Lance Junkin, P.E.
Alabama Reg. 14817

Project Number:
2205

LATHAN
ARCHITECTS
LATHAN ▪ BRYANT ▪ CALMA

NEW JROTC FACILITY FOR
PLEASANT GROVE HIGH SCHOOL
100 SPARTIAN DRIVE, PLEASANT GROVE, AL 35127
JEFFERSON COUNTY BOARD OF EDUCATION

ALABAMA
LICENSED
PROFESSIONAL
ENGINEER
JEFFREY LANCE JUNKIN
14817
2-1-22

SHEET TITLE:
FLOOR PLAN - POWER

PROJ. MGR.:	LANCE JUNKIN
DRAWN:	SEC
DATE:	FEBRUARY 1, 2022
REVISIONS	

JOB NO. 21-66

SHEET NO:
E4.1
4 OF 5

0 1" 2"

OUTLET NUMBER:	ROOM NUMBER:
2A	114
IDF NUMBER:	PATCH PANEL/PORT #:
IDF	1 / 1

AUXILIARY CIRCUIT LEGEND

SS1 (S)	SPEAKER – FED FROM COMMON ZONE SS1
2A	DATA OUTLET 2A (1 CAT. 6 CABLE PULLED TO JUNCTION BOX AND TERMINATED, LEAVE 12" SLACK ON EACH CABLE)
SSA5 (S)	SPEAKER – FED FROM INDIVIDUAL ZONE SSA5

DETAIL - DATA CABLE LABEL

N.T.S.

NOTES:

1. LABEL ALL CABLES EVERY 50' AND AT EACH END.
2. EXACT LABEL METHOD SHALL BE COORDINATED WITH, AND APPROVED BY, ENGINEER PRIOR TO PURCHASE AND INSTALLATION.
3. IF ONLY ONE (1) OUTLET IN A ROOM, LABEL OUTLET AS 1A.
4. ROOM NUMBERS ON LABELS SHALL CORRESPOND TO FINAL ROOM NUMBERS IN FIELD (NOT NECESSARILY SAME AS ON CONSTRUCTION DRAWINGS).

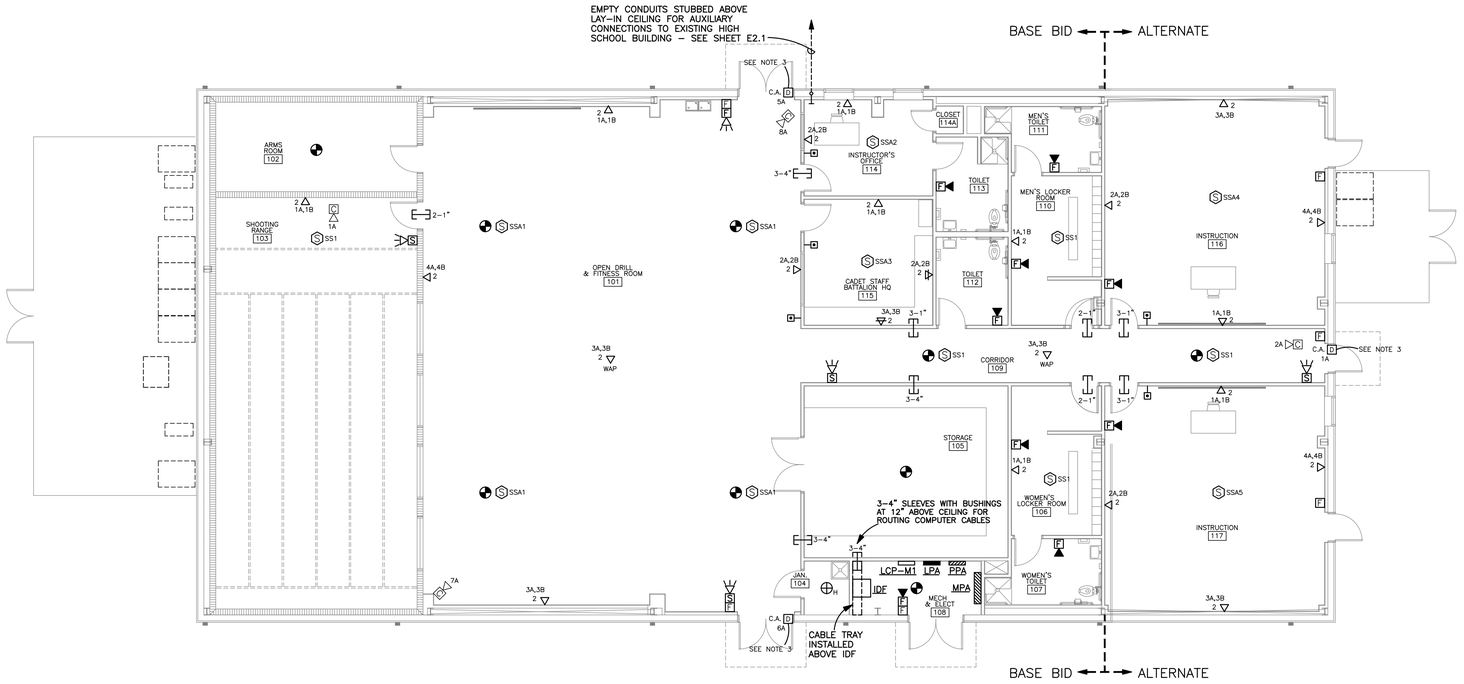

FLOOR PLAN - AUXILIARIES

SCALE: 1/8" = 1'–0"

NOTES:

1. ALL COMPUTER OUTLETS SHOWN ON THIS PLAN ARE SERVED FROM IDF.
2. COORDINATE FINAL LOCATIONS OF ALL CEILING SPEAKERS, SMOKE DETECTORS, ETC. TO AVOID CONFLICT WITH LIGHT FIXTURES AND MECHANICAL DIFFUSERS. PLACE THESE DEVICES AS CLOSE AS POSSIBLE TO LOCATION SHOWN ON THESE DRAWINGS. COORDINATE WITH FIRE ALARM SYSTEM MANUFACTURER WITH REGARD TO APPROPRIATE "MINIMUM" DISTANCE FROM DIFFUSERS.
3. AT THESE DOOR LOCATIONS, CONTRACTOR SHALL INSTALL JUNCTION BOX WITH 3/4" CONDUIT WITH CAT 6 CABLE FOR CARD ACCESS SYSTEM. COORDINATE CLOSELY WITH ARCHITECT FOR DOOR HARDWARE CONFIGURATION. MAKE ALL CONNECTIONS AS NECESSARY.

STEWART ENGINEERING
ELECTRICAL CONSULTANTS

P.O. Box 2233 (36202)
300 East 7th Street (36207)
Anniston, Alabama
Phone: 256/237-0891
Fax No.: 256/237-1077
Email: services@stewartengineering.org

Engineer:
J. Lance Junkin, P.E.
Alabama Reg. 14817

Project Number:
2205

LATHAN ARCHITECTS
LATHAN ▪ BRYANT ▪ CALMA

NEW JROTC FACILITY FOR PLEASANT GROVE HIGH SCHOOL

100 SPARTIAN DRIVE, PLEASANT GROVE, AL. 35127
JEFFERSON COUNTY BOARD OF EDUCATION

ALABAMA LICENSED PROFESSIONAL ENGINEER JEFFREY LANCE JUNKIN 14817 2-1-22

SHEET TITLE:
FLOOR PLAN – AUXILIARIES

PROJ. MGR.:	LANCE JUNKIN
DRAWN:	SEC
DATE:	FEBRUARY 1, 2022
REVISIONS	

JOB NO. 21-66

SHEET NO:
E5.1
5 OF 5

0 1" 2"