DESIGN DRAWINGS FOR:

AIRPORT TERMINAL AND HANGAR DEVELOPMENT

DEFUNIAK SPRINGS MUNICIPAL AIRPORT
WALTON COUNTY, FLORIDA

FDOT FPN: 429681-2-94-01
FAA GRANT: 3-12-0018-013-2021

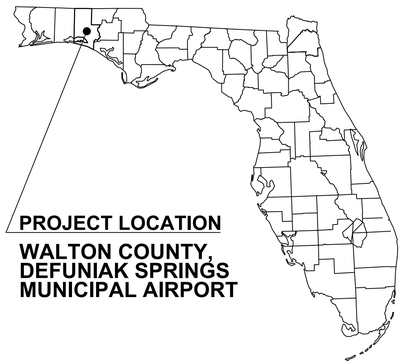

VICINITY MAP
N.T.S.

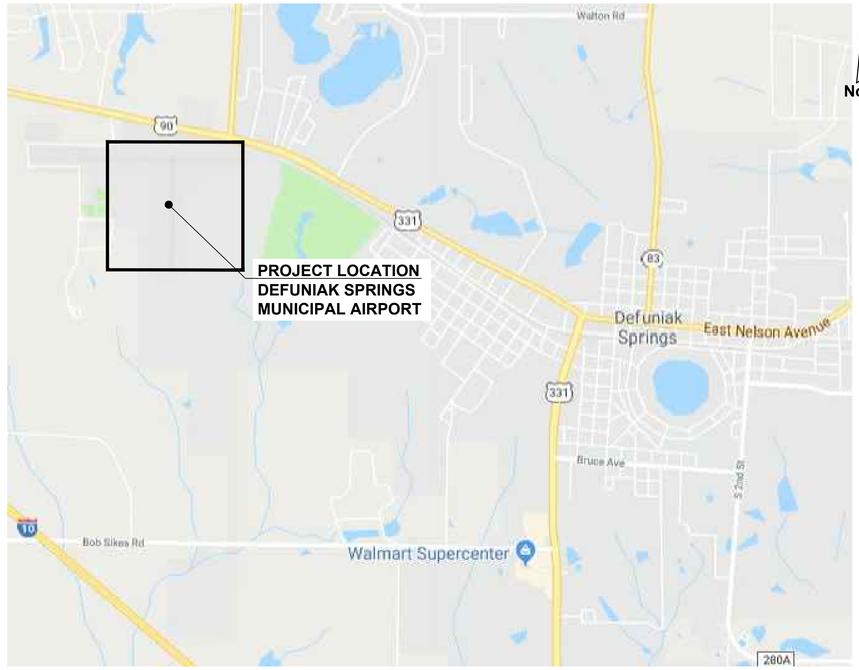

LOCATION MAP
N.T.S.

PREPARED FOR:

CITY OF DEFUNIAK SPRINGS
71 U.S. HIGHWAY 90 WEST
DEFUNIAK SPRINGS, FL 32433
(850) 892-2000

ENGINEER:

AVCON, INC.
ENGINEERS & PLANNERS
320 BAYSHORE DRIVE, SUITE A
NICEVILLE, FL 32578-2425
OFFICE: (850) 678-0050
CORPORATE CERTIFICATE OF
AUTHORIZATION NUMBER: 5057
www.avconinc.com

ARCHITECT:

MICHAEL BAKER
INTERNATIONAL
4211 W. BOY SCOUT BOULEVARD, SUITE 500
TAMPA, FL 33607-5767
OFFICE: (813) 466-6022
MICHAEL BAKER INTERNATIONAL FLORIDA
LICENSE #AA00003054
www.MBakerintl.com

RELEASE FOR BID

AVCON
TRANSFORMING TODAY'S IDEAS INTO TOMORROW'S REALITY

JOHN R. COLLINS
FL LICENSE NO.: 75419
FBPR CERTIFICATE OF
AUTHORIZATION NO. 5057

NO.	DATE	REVISION	BY

COVER SHEET

RELEASE FOR BID

AIRPORT TERMINAL AND HANGAR DEVELOPMENT

PREPARED FOR
DEFUNIAK SPRINGS MUNICIPAL AIRPORT

DESIGNED BY:	J.C.
DRAWN BY:	D.F.
CHECKED BY:	T.N.
APPROVED BY:	V.L.
PROJECT NO:	2019.028.01
DATE:	NOVEMBER 2021

SHEET NUMBER
G-1

THIS DOCUMENT CONTAINS PRIVILEGED AND PROPRIETARY INFORMATION, ALL OF WHICH IS EXPRESSLY PROVIDED BY AVCON, INC., FOR USE BY THE INTENDED RECIPIENT, AND FOR A SPECIFIC PURPOSE. WITHOUT THE EXPRESS WRITTEN CONSENT OF AVCON, INC. ANY DISTRIBUTION, REPRODUCTION, OR OTHER USE OF THIS DOCUMENT, IN WHOLE OR IN PART, IS STRICTLY PROHIBITED

N:\NICEVILLE_PROJECTS\028_DEFUNIAK_AIRPORT\2019.028.01_TERMINAL_DEVELOPMENT\000_CAD\192801_COVER.DWG, 1/19/2022 8:58 AM

GENERAL (CIVIL)

SHEET NUMBER	SHEET TITLE
G–1	COVER SHEET
G–2	INDEX OF DRAWINGS
G–3	SUMMARY OF QUANTITIES
G–4	GENERAL NOTES
G–5	SAFTEY & SECURITY NOTES
G–6	SAFETY DURING CONSTRUCTION & PHASING PLAN

CIVIL

SHEET NUMBER	SHEET TITLE
C–1	OVERALL MASTER SITE PLAN
C–2	ADDITIVE ALTERNATE PLAN
C–3	EXISTING CONDITIONS, DEMOLITION & EROSION CONTROL PLAN
C–4	SITE PLAN (SHEET 1 OF 2)
C–5	SITE PLAN (SHEET 2 OF 2)
C–6	SITE GEOMETRY PLAN (SHEET 1 OF 3)
C–7	SITE GEOMETRY PLAN (SHEET 2 OF 3)
C–8	SITE GEOMETRY PLAN (SHEET 3 OF 3)
C–9	GRADING & DRAINAGE PLAN (SHEET 1 OF 2)
C–10	GRADING & DRAINAGE PLAN (SHEET 2 OF 2)
C–11	STORMWATER PIPE & STRUCTURE TABLES
C–12	UTILITY PLAN
C–13	UTILITY DETAILS (SHEET 1 OF 2)
C–14	UTILITY DETAILS (SHEET 2 OF 2)
C–15	GRINDER PUMP DETAILS
C–16	SOD LOCATION PLAN (SHEET 1 OF 2)
C–17	SOD LOCATION PLAN (SHEET 2 OF 2)
C–18	MISCELLANEOUS DETAILS (SHEET 1 OF 2)
C–19	MISCELLANEOUS DETAILS (SHEET 2 OF 2)
C–20	AIRFIELD TYPICAL PAVEMENT SECTIONS
C–21	LANDSIDE TYPICAL PAVEMENT SECTIONS
C–22	FENCE DETAILS (SHEET 1 OF 3)
C–23	FENCE DETAILS (SHEET 2 OF 3)
C–24	FENCE DETAILS (SHEET 3 OF 3)

MARKING

SHEET NUMBER	SHEET TITLE
MRK–1	AIRFIELD MARKING PLAN
MRK–2	LANDSIDE MARKING PLAN
MRK–3	LANDSIDE MARKING DETAILS

AIRFIELD ELECTRICAL

SHEET NUMBER	SHEET TITLE
E000	FOREIGN OBJECT DEBRIS (FOD) CONTROL
E001	AIRFIELD ELECTRICAL GENERAL NOTES
E101	AIRFIELD LIGHTING ELECTRICAL DEMOLITION
E301	AIRFIELD LIGHTING ELECTRICAL LAYOUT & CIRCUITING
E501	ELEVATED FIXTURE DETAILS
E502	PRECAST ELEVATED FIXTURES
E503	SIGN NOTES
E504	SIGN DETAILS (SHEET 1 OF 2)
E505	SIGN DETAILS (SHEET 2 OF 2)
E506	DUCT BANK DETAILS (SHEET 1 OF 2)
E507	DUCT BANK DETAILS (SHEET 2 OF 2)
E508	WIRING DETAIL
E508	UTILITY PROTECTION

GENERAL (ARCHITECTURAL)

SHEET NUMBER	SHEET TITLE
G0.02	GENERAL NOTES
G0.03	GENERAL SYMBOLS, LEGENDS AND GRAPHIC STANDARDS
G0.04	WALL TYPES
G0.05	CEILING DETAILS
G1.01	LIFE SAFETY PLAN
G1.02	UL DESIGNS
G1.03	UL DESIGNS
G1.04	UL DESIGNS

ARCHITECTURAL

SHEET NUMBER	SHEET TITLE
A–002	TYPICAL ADA DETAILS
A–101	OVERALL FLOOR PLAN
A–102	1ST FLOOR PLAN
A–103	CLERESTORY PLAN
A–111	DIMENSION PLAN
A–120	REFLECTED CEILING PLAN
A–130	ROOF PLAN
A–140	FINISH FLOOR PLAN
A–142	FINISH SCHEDULE & SIGNAGE SCHEDULE
A–201	ELEVATION
A–202	ELEVATION
A–203	ELEVATION
A–204	ELEVATION
A–205	ELEVATION
A–301	BUILDING SECTIONS
A–302	BUILDING SECTIONS
A–303	BUILDING SECTIONS
A–304	CANOPY SECTIONS
A–311	WALL SECTIONS
A–312	WALL SECTIONS
A–313	WALL SECTIONS
A–314	WALL SECTIONS
A–401	ENLARGED PLANS
A–402	INTERIOR ELEVATIONS
A–403	INTERIOR ELEVATIONS
A–404	INTERIOR ELEVATIONS
A–405	ENLARGED PLANS
A–501	GLULAM ASSEMBLIES
A–502	DETAIL SECTION VIEWS
A–503	DETAIL SECTION VIEWS
A–504	PLAN DETAILS
A–505	WINDOW DETAILS
A–506	DETAILS
A–507	DETAILS
A–611	DOOR SCHEDULE, DOOR AND WINDOW ELEVATIONS
A–612	DOOR AND JAMB DETAILS
A–700	MILLWORK DETAILS 01
A–704	MILLWORK DETAILS 05
A–800	ROOF DETAILS 01
A–801	ROOF DETAILS 02
A–802	MISCELLANEOUS DETAILS

HANGAR

SHEET NUMBER	SHEET TITLE
HA–101	ENLARGED HANGAR PLAN
HA–130	HANGAR ROOF PLAN
HA–201	FUTURE HANGAR ELEVATIONS
HA–202	FUTURE HANGAR ELEVATIONS
HA–301	FUTURE HANGAR SECTIONS
HA–311	FUTURE HANGAR WALL SECTIONS
HA–501	FUTURE HANGAR DETAILS
HA–502	FUTURE HANGAR DETAILS
HA–601	REFLECTED CEILING PLAN
HA–611	FUTURE HANGAR DOOR SCHEDULE
HA–612	FUTURE HANGAR DOOR DETAILS

STRUCTURAL

SHEET NUMBER	SHEET TITLE
S1.00	GENERAL NOTES
S1.01	GENERAL NOTES
S1.02	GENERAL NOTES
S2.00	FOUNDATION PLAN – OFFICE
S2.01	FOUNDATION PLAN – HANGAR
S2.02	ROOF PLAN – OFFICE
S2.03	HIGH ROOF PLAN – OFFICE
S3.01	FOUNDATION DETAILS
S3.02	FOUNDATION DETAILS
S3.03	FOUNDATION DETAILS
S3.04	PEMB DETAILS
S4.01	MASONRY DETAILS
S4.02	MASONRY DETAILS
S5.01	ROOF DETAILS
S5.02	ROOF DETAILS
S5.03	ROOF DETAILS
S5.04	ROOF DETAILS
S5.05	TRUSS DETAILS AT ROD CONNX
S5.06	SCHEDULES

MECHANICAL

SHEET NUMBER	SHEET TITLE
M–001	MECHANICAL SYMBOLS AND LEGENDS
M–101	OVERALL MECHANICAL FLOOR PLAN
M–102	MECHANICAL 1ST FLOOR PLAN – AREA A
M–103	MECHANICAL ROOF PLAN
HM–101	HANGAR MECHANICAL PLAN
M–501	MECHANICAL DETAILS
M–502	MECHANICAL DETAILS
M–503	MECHANICAL DETAILS
M–504	MECHANICAL ELEVATIONS
M–601	MECHANICAL SCHEDULES
M–701	MECHANICAL CONTROLS

ELECTRICAL

SHEET NUMBER	SHEET TITLE
E–001	GENERAL ELECTRICAL NOTES
E–002	ELECTRICAL, TECHNOLOGY AND FIRE ALARM SYMBOL LEGEND
E–100	LUMINAIRE SCHEDULE
E–101	TERMINAL LIGHTING PLAN
E–102	TERMINAL LIGHTING PLAN
E–103	HANGAR LIGHTING PLAN
E–201	TERMINAL POWER PLAN
E–202	TERMINAL POWER PLAN
E–203	HANGAR POWER & GROUNDING PLANS
E–401	LIGHTING CONTROL RISER DIAGRAM
E–402	POWER ONE–LINE DIAGRAM
E–403	PANEL SCHEDULES
ES–101	ELECTRICAL SITE PLAN
ES–501	TRANSFORMER INSTALLATION DETAILS
FA–101	TERMINAL FIRE ALARM PLAN
FA–102	TERMINAL FIRE ALARM PLAN
FA–103	HANGAR FIRE ALARM PLAN
FA–401	FIRE ALARM RISER DIAGRAM
LP–101	LIGHTING PROTECTION PLAN
LP–501	LIGHTING PROTECTION & GROUNDING DETAILS

TECHNOLOGY

SHEET NUMBER	SHEET TITLE
T–101	TERMINAL TECHNOLOGY PLAN
T–102	TERMINAL TECHNOLOGY PLAN
T–501	DATA/VOICE DETAILS
T–502	COMMUNICATIONS DETAILS
T–503	PACS SECURITY DETAILS

PLUMBING

SHEET NUMBER	SHEET TITLE
P–001	SYMBOLS LEGEND AND SCHEDULES – PLUMBING
P–101	OVERALL PLUMBING FLOOR PLAN
P–102	PLUMBING 1ST FLOOR PLAN – AREA A
HP–101	HANGAR PLUMBING PLAN
P–103	PLUMBING ROOF PLAN
P–301	PLUMBING RISER DIAGRAMS
P–302	PLUMBING RISER DIAGRAMS
P–501	PLUMBING DETAILS
P–502	PLUMBING DETAILS
P–503	PLUMBING DETAILS

FIRE PROTECTION

SHEET NUMBER	SHEET TITLE
F–001	FIRE PROTECTION LEGEND
F–101	OVERALL FIRE PROTECTION FLOOR PLAN
F–102	FIRE PROTECTION 1ST FLOOR PLAN – AREA A
F–501	FIRE PROTECTION DETAILS
F–502	FIRE PROTECTION DETAILS

RELEASE FOR BID

AVCON

TRANSFORMING TODAY'S IDEAS INTO TOMORROW'S REALITY

JOHN R. COLLINS
FL LICENSE NO.: 75419
FBPR CERTIFICATE OF AUTHORIZATION NO. 5057

NO.	DATE	REVISION	BY

INDEX OF DRAWINGS

RELEASE FOR BID

AIRPORT TERMINAL AND HANGAR DEVELOPMENT

PREPARED FOR

DEFUNIAK SPRINGS MUNICIPAL AIRPORT

DESIGNED BY:	J.C.
DRAWN BY:	D.F.
CHECKED BY:	T.N.
APPROVED BY:	V.L.
PROJECT NO:	2019.028.01
DATE:	NOVEMBER 2021

SHEET NUMBER

G-2

THIS DOCUMENT CONTAINS PRIVILEGED AND PROPRIETARY INFORMATION, ALL OF WHICH IS EXPRESSLY PROVIDED BY AVCON, INC., FOR USE BY THE INTENDED RECIPIENT, AND FOR A SPECIFIC PURPOSE. WITHOUT THE EXPRESS WRITTEN CONSENT OF AVCON, INC. ANY DISTRIBUTION, REPRODUCTION, OR OTHER USE OF THIS DOCUMENT, IN WHOLE OR IN PART, IS STRICTLY PROHIBITED

N:\NICEVILLE_PROJECTS_028_DEFUNIAK_AIRPORT\2019.028.01_-_TERMINAL_DEVELOPMENT\000_CAD\190280I_COVER.DWG 1/18/2022 8:58 AM

BASE BID - TERMINAL BUILDING				
ITEM NO.	BID ITEM	ITEM DESCRIPTION	UNIT	QTY
1	C-105-1	MOBILIZATION	LS	1
2	TB-1	TERMINAL BUILDING, COMPLETE	LS	1

ADDITIVE ALTERNATE NO. 1 - MAIN ENTRY COVERED CANOPY AT DROP-OFF				
ITEM NO.	BID ITEM	ITEM DESCRIPTION	UNIT	QTY
1	C-105-1	MOBILIZATION	LS	1
2	CC-1	MAIN ENTRY COVERED CANOPY AT DROP-OFF	LS	1

ADDITIVE ALTERNATE NO. 2 - COURTYARD ENCLOSURE ELEMENTS				
ITEM NO.	BID ITEM	ITEM DESCRIPTION	UNIT	QTY
1	C-105-1	MOBILIZATION	LS	1
2	CE-1	COURTYARD ENCLOSURE ELEMENTS	LS	1

ADDITIVE ALTERNATE NO. 3 - LANDSIDE SITE WORK BEYOND THE BUILDING PAD				
ITEM NO.	BID ITEM	ITEM DESCRIPTION	UNIT	QTY
1	C-102-1	EROSION & POLLUTION CONTROL	LS	1
2	C-105-1	MOBILIZATION	LS	1
3	C-105-2	MAINTENANCE OF TRAFFIC	LS	1
4	P-101-1	MISCELLANEOUS PAVEMENT REMOVAL	SY	825
5	P-151-1	STRIPPNIG	SY	11,400
6	P-152-1	EXCAVATION AND EMBANKMENT	LS	1
7	P-152-2	SUBGRADE PREPARATION (LBR 40)	SY	2,000
8	P-154-1	STABILIZED SUBBASE COURSE (12")	SY	1,900
9	P-209-1	8" CRUSHED AGGREGATE BASE COURSE	SY	1,800
10	P-401-1	2" BITUMINOUS SURFACE COURSE, 76-22 BINDER	TN	190
11	D-701-2	24" ADS, N-12	LF	350
12	D-751-1	TYPE F DBI	EA	4
13	F-162-1	7' + 1' AOA FENCE	LF	2,300
14	F-162-4	24' AUTOMATIC SLIDING GATE, 7' + 1'	EA	1
15	T-904-1	SODDING, BAHIA ARGENTINA	SY	8,300
16	520-1	CONCRETE CURB & GUTTER, TYPE RA	LF	750
17	520-2	SIDEWALK INTEGRAL CURB	LF	280
18	522-1	PCC SIDEWALK	SY	225
19	522-2	PCC DUMPSTER PAD AND ENCLOSURE, COMPLETE	EA	1
20	700-1	VEHICULAR SIGNAGE	LS	1
21	710-1	LANDSIDE PAVEMENT MARKINGS	LS	1
22	02660-1	POTABLE WATER IMPROVEMENTS	LS	1
23	02730-1	SANITARY SEWER IMPROVEMENTS	LS	1
24	WH-1	WHEEL STOPS	EA	20
25	AL-1	LOBBY SEATING, CONFERENCE ROOM SEATING, AND PALM TREES	AL	1
26	AL-2	PERMITTING AND CONNECTION IMPACT FEES	AL	1
27	AL-3	GULF POWER ALLOWANCE	AL	1
28	AL-4	TELECOMUNICATIONS ALLOWANCE	AL	1

ADDITIVE ALTERNATE NO. 4 - HANGAR BUILDING				
ITEM NO.	BID ITEM	ITEM DESCRIPTION	UNIT	QTY
1	C-105-1	MOBILIZATION	LS	1
2	HB-1	HANGAR BUILDING, COMPLETE	LS	1

ADDITIVE ALTERNATE NO. 5 - BARN DOOR IN LIEU OF GLASS DOOR AND WALL				
ITEM NO.	BID ITEM	ITEM DESCRIPTION	UNIT	QTY
1	BD-1	BARN DOOR IN LIEU OF GLASS DOOR AND WALL	LS	1

ADDITIVE ALTERNATE NO. 6 - APRON SITE WORK				
ITEM NO.	BID ITEM	ITEM DESCRIPTION	UNIT	QTY
1	C-102-1	EROSION & POLLUTION CONTROL	LS	1
2	C-105-1	MOBILIZATION	LS	1
3	C-105-2	MAINTENANCE OF TRAFFIC	LS	1
4	P-151-1	CLEARING AND GRUBBING	SY	12,600
5	P-152-1	EXCAVATION AND EMBANKMENT	LS	1
6	P-152-2	SUBGRADE PREPARATION (LBR 40)	SY	5,700
7	P-154-1	STABILIZED SUBBASE COURSE (12")	SY	5,400
8	P-209-1	8" CRUSHED AGGREGATE BASE COURSE	SY	5,100
9	P-401-2	4" BITUMINOUS SURFACE COURSE, 76-22 BINDER	TN	1,060
10	P-620-1	APRON PAVEMENT MARKINGS	LS	1
11	D-701-1	18" RCP, CLASS III	LF	190
12	D-701-3	36" RCP, CLASS III	LF	310
13	D-701-4	42" RCP, CLASS III	LF	110
14	D-701-5	42" MES WITH 15' X 15' RIP RAP	EA	1
15	D-751-2	TYPE F DBI, AIRCRAFT RATED	EA	2
16	D-751-3	TYPE G DBI, AIRCRAFT RATED	EA	2
17	D-751-4	TYPE F TOP, TYPE J ALT A (8'-0" DIA) BOTTOM, AIRCRAFT RATED	EA	1
18	TD-1-1	A-I AIRCRAFT TIE DOWN ANCHOR ASSEMBLY (3 ANCHOR POINTS)	EA	5
19	TD-1-2	B-II AIRCRAFT TIE DOWN ANCHOR ASSEMBLY (3 ANCHOR POINTS)	EA	1
20	T-904-1	SODDING, BAHIA ARGENTINA	SY	7,400

ADDITIVE ALTERNATE NO. 7 - TAXIWAY CONNECTOR WIDENING SITE WORK				
ITEM NO.	BID ITEM	ITEM DESCRIPTION	UNIT	QTY
1	C-102-1	EROSION & POLLUTION CONTROL	LS	1
2	C-105-1	MOBILIZATION	LS	1
3	C-105-2	MAINTENANCE OF TRAFFIC	LS	1
4	P-151-1	CLEARING AND GRUBBING	SY	4,100
5	P-152-1	EXCAVATION AND EMBANKMENT	LS	1
6	P-152-2	SUBGRADE PREPARATION (LBR 40)	SY	2,100
7	P-154-1	STABILIZED SUBBASE COURSE (12")	SY	2,000
8	P-209-1	8" CRUSHED AGGREGATE BASE COURSE	SY	1,900
9	P-401-2	4" BITUMINOUS SURFACE COURSE, 76-22 BINDER	TN	390
10	P-620-2	TAXIWAY CONNECTOR PAVEMENT MARKINGS	LS	1
11	T-904-1	SODDING, BAHIA ARGENTINA	SY	600
12	SP-104-1	TEMPORARY POWER & TEMPORARY AIRFIELD LIGHTING/SIGNAGE/NAVIGATIONAL FACILITIES	LS	1
13	SP-105-1	ELECTRICAL DEMOLITION	LS	1
14	L-108-1	1/C L-824 TYPE C UNSHIELDED #8 AWG 5 KV STRANDED COPPER CABLE, INSTALLED IN DUCT OR CONDUIT	LF	2,500
15	L-108-2	1/C #2 AWG SOLID COPPER COUNTERPOISE CABLE, INSTALLED OVER DUCT OR CONDUIT	LF	2,000
16	L-108-3	0.75" DIAMETER BY 10.00' LONG COPPER CLAD STEEL SECTIONAL GROUND ROD	EA	70
17	L-110-1	1 WAY 2" SCHEDULE 40 PVC DIRECT BURIED DUCT	LF	1,850
18	L-110-2	1 WAY 2" SCHEDULE 40 PVC CONCRETE ENCASED DUCT	LF	150
19	L-110-3	1 WAY 4" SPLIT DUCT	LF	100
20	L-125-2	L-858(L) SIGN – SINGLE/DOUBLE FACE, LED, SIZE 2 - 2 MODULE	EA	1
21	L-125-3	L-858(L) SIGN – SINGLE/DOUBLE FACE, LED, SIZE 2 - 4 MODULE	EA	2
22	L-125-1	L-861T(L) OMNIDIRECTIONAL, BLUE, LED, TAXIWAY EDGE LIGHT	EA	21

RELEASE FOR BID

AVCON
TRANSFORMING TODAY'S IDEAS INTO TOMORROW'S REALITY

JOHN R. COLLINS
FL LICENSE NO.: 75419
FBPR CERTIFICATE OF AUTHORIZATION NO. 5057

NO.	DATE	REVISION	BY

SUMMARY OF QUANTITIES

RELEASE FOR BID

AIRPORT TERMINAL AND HANGAR DEVELOPMENT

PREPARED FOR

DEFUNIAK SPRINGS MUNICIPAL AIRPORT

DESIGNED BY: J.C.
DRAWN BY: D.F.
CHECKED BY: T.N.
APPROVED BY: V.L.
PROJECT NO: 2019.028.01
DATE: NOVEMBER 2021

SHEET NUMBER
G-3

THIS DOCUMENT CONTAINS PRIVILEGED AND PROPRIETARY INFORMATION, ALL OF WHICH IS EXPRESSLY PROVIDED BY AVCON, INC., FOR USE BY THE INTENDED RECIPIENT, AND FOR A SPECIFIC PURPOSE. WITHOUT THE EXPRESS WRITTEN CONSENT OF AVCON, INC. ANY DISTRIBUTION, REPRODUCTION, OR OTHER USE OF THIS DOCUMENT, IN WHOLE OR IN PART, IS STRICTLY PROHIBITED

N:\WCRWILE_PROJECTS\028_DEFUNIAK AIRPORT\2019.028.01 TERMINAL DEVELOPMENT\000 CAD\190801_COVER.DWG 1/18/2022 10:12 AM

GENERAL NOTES

1. UNLESS OTHERWISE SPECIFIED, ALL WORK SHALL BE PERFORMED CONSISTENT WITH THE FOLLOWING SPECIFICATIONS: CITY OF DEFUNIAK SPRINGS, FAA, AND FDOT.

2. THIS DESIGN HAS BEEN BASED UPON FIELD SURVEY PREPARED BY SOUTHEASTERN SURVEYING AND MAPPING CORPORATION. MAKES NO ASSURANCES REGARDING THE ACCURACY OF SUCH SURVEY OR GEOTECHNICAL EVALUATION.

3. ALL QUALITY CONTROL TESTING WILL BE THE RESPONSIBILITY OF THE CONTRACTOR AS SPECIFIED IN THE SPECIFICATIONS.

4. THE OWNER WILL BE RESPONSIBLE FOR ALL QUALITY ACCEPTANCE TESTING REQUIRED IN THE CONTRACT SPECIFICATIONS.

5. THE CONTRACTOR SHALL PREPARE A WRITTEN QUALITY CONTROL / QUALITY ACCEPTANCE PLAN THAT DESCRIBES THE CONTRACTOR QUALITY CONTROL PROGRAM AND THE CONTRACTOR'S QUALITY ACCEPTANCE TESTING REQUIREMENTS. THIS WRITTEN PLAN MUST BE SUBMITTED PRIOR TO ISSUANCE OF THE NOTICE-TO-PROCEED.

6. THE PROJECT PAY ITEMS ARE PROVIDED TO BE INCLUSIVE OF ALL SITE WORK TO BE PERFORMED AS SHOWN IN THESE PLANS. ALL WORK NOT IDENTIFIED UNDER A SPECIFIC PAY ITEM SHALL BE CONSIDERED REQUIRED AND IS INCIDENTAL TO THE COST OF THE PROJECT PAY ITEMS PROVIDED. THE BALANCE OF THE OTHER WORK FOR THE PROJECT SHALL BE A LUMP SUM.

7. CONTRACTOR SHALL PROTECT ALL EXISTING LANDSCAPING, SIDEWALKS, PAVEMENTS, CURBS, SEEDING, AND SOD NOT SPECIFIED FOR REMOVAL IN THESE PLANS. ANY DAMAGE TO THE EXISTING IMPROVEMENTS SHALL BE RESTORED BY THE CONTRACTOR AT NO COST TO THE OWNER, UNLESS OTHERWISE SPECIFIED HEREIN.

8. CONTRACTOR SHALL FAMILIARIZE HIMSELF WITH THE SITE, INCLUDING ALL SURFACE AND SUB-SURFACE CONDITIONS, THE WORK REQUIRED AND ALL OTHER CONDITIONS THAT MAY AFFECT THE SUCCESSFUL COMPLETION OF THE JOB PRIOR TO COMMENCEMENT OF WORK.

9. THE CONTRACTOR SHALL GIVE ALL NOTICES AND COMPLY WITH ALL LAWS, ORDINANCES, RULES, REGULATIONS AND PERMIT CONDITIONS BEARING ON THE CONDUCT OF THE WORK, AS DRAWN AND SPECIFIED. IF THE CONTRACTOR OBSERVES THAT THE DRAWINGS AND SPECIFICATIONS ARE AT VARIANCE THEREWITH, HE SHALL PROMPTLY NOTIFY THE ENGINEER, IN WRITING, AND ANY NECESSARY CHANGES SHALL BE ADJUSTED, AS PROVIDED IN THE AGREEMENT FOR CHANGES IN THE WORK.

10. THE CONTRACTOR SHALL BE RESPONSIBLE TO THE OWNER AND THE ENGINEER FOR THE ACTS AND OMISSIONS OF CONTRACTOR'S EMPLOYEES AND ALL HIS SUBCONTRACTORS AND THEIR AGENTS AND EMPLOYEES AND OTHER PERSONS PERFORMING ANY OF THE WORK UNDER A CONTRACT WITH THE CONTRACTOR.

11. THE CONTRACTOR SHALL BE RESPONSIBLE FOR MAKING ALL NECESSARY ARRANGEMENTS WITH GOVERNMENTAL DEPARTMENTS, PUBLIC UTILITIES, PUBLIC CARRIERS, SERVICE COMPANIES, AND CORPORATIONS OWNING OR CONTROLLING ROADWAYS, WATER, SEWER, GAS, ELECTRICAL, AND TELEPHONE FACILITIES SUCH AS PAVEMENTS, PIPING, WIRES, CABLES, CONDUITS, POLES, GUYS, OR OTHER SIMILAR FACILITIES, INCLUDING INCIDENTAL STRUCTURES CONNECTED THEREWITH THAT ARE ENCOUNTERED IN THE WORK IN ORDER THAT SUCH ITEMS MAY BE PROPERLY SUPPORTED, PROTECTED OR LOCATED.

12. UNLESS OTHERWISE SPECIFIED IN THE GENERAL CONDITIONS, ALL CONSTRUCTION IS TO BE GOVERNED BY THE PLANS, APPLICABLE PERMITS, AND SPECIFICATIONS HEREIN, AND ALL APPLICABLE FEDERAL, STATE AND LOCAL BUILDING AND SAFETY CODES, SPECIFICATIONS, LAWS AND ORDINANCES. TO INCLUDE BUT NOT LIMITED TO THE FAA, THE FDOT, THE FLORIDA BUILDING CODE, AND THE CITY OF DEFUNIAK CODES.

13. PRIOR TO PERFORMING ANY WORK WITHIN ANY PUBLIC RIGHT-OF-WAY, CONTRACTOR SHALL DEVELOP AND IMPLEMENT A TRAFFIC CONTROL PLAN CONSISTENT WITH THE "MANUAL ON UNIFORM TRAFFIC CONTROL DEVICES" PUBLISHED BY THE U.S. DEPARTMENT OF TRANSPORTATION, FEDERAL HIGHWAY ADMINISTRATION.

14. PRIOR TO PERFORMING ANY WORK WITHIN ANY UTILITY RIGHT-OF-WAY, CONTRACTOR SHALL OBTAIN AUTHORIZATION AND PERMIT FROM JURISDICTION RESPONSIBLE FOR SUCH RIGHT-OF-WAY.

15. IN THE EVENT THE CONTRACTOR DISCOVERS ANY ERRORS OR OMISSIONS IN THE PLANS, HE SHALL IMMEDIATELY NOTIFY THE ENGINEER.

16. CONTRACTOR SHALL PRESERVE AND PROTECT ALL PERMANENT REFERENCE MONUMENTS, PERMANENT CONTROL POINTS, PERMANENT BENCH MARKS AND PROPERTY CORNERS. IN THE EVENT THE MONUMENTS, POINTS OR MARKERS ARE DISTURBED THE CONTRACTOR SHALL EMPLOY A FLORIDA REGISTERED LAND SURVEYOR TO RESET OR REPLACE THEM. CERTIFICATION OF THE RESET OR REPLACEMENT SHALL BE SUBMITTED TO THE ENGINEER FOR APPROVAL.

17. THE OWNER, OWNER'S AGENT AND INSPECTORS OF APPLICABLE GOVERNMENT JURISDICTIONS, SHALL AT ALL TIMES HAVE ACCESS TO THE WORK WHEREVER AND WHENEVER IT IS IN PREPARATION OR PROGRESS; AND THE CONTRACTOR SHALL PROVIDE PROPER FACILITIES FOR SUCH ACCESS AND FOR THE INSPECTION.

18. IT IS THE CONTRACTOR'S RESPONSIBILITY TO TAKE ALL REASONABLE AND PRUDENT PRECAUTIONS TO INSURE THAT ALL COMPLETED WORK, MATERIALS AND EQUIPMENT STORED ON SITE ARE SAFE AND SECURED FROM UNAUTHORIZED ACCESS OR USE UNTIL SUCH TIME THAT THE OWNER TAKES WRITTEN OWNERSHIP OF THE COMPLETED PROJECT. SUCH PRECAUTIONS MAY INCLUDE INSTALLATION OF SIGNS, FENCES, OR POSTING OF SECURITY GUARDS.

19. CONTRACTOR SHALL, AT ALL TIMES, UTILIZE ALL NORMALLY ACCEPTED AND REASONABLY EXPECTED SAFETY PRACTICES AND COMPLY WITH ALL FEDERAL, STATE AND LOCAL REGULATIONS, ORDINANCES AND GUIDELINES PERTAINING TO SAFE UTILIZATION OF EQUIPMENT OR MATERIALS AS PUBLISHED BY THE MANUFACTURER.

20. PRIOR TO INITIATING ANY EXCAVATION (INCLUDING BUT NOT LIMITED TO TUNNELS, DITCHES, STORMWATER PONDS, CANALS) CONTRACTOR SHALL INSTALL FENCES AND TAKE ALL OTHER REASONABLE AND PRUDENT STEPS TO ENSURE THAT ACCESS TO EXCAVATION BY UNAUTHORIZED PERSONNEL IS PREVENTED.

21. THE CONTRACTOR SHALL TAKE ALL REASONABLE PRECAUTIONS FOR THE SAFETY OF, AND SHALL PROVIDE ALL REASONABLE PROTECTION TO PREVENT DAMAGE, INJURY OR LOSS TO:

21.1. ALL EMPLOYEES ON THE WORK SITE AND ALL OTHER PERSONS WHO MAY BE AFFECTED THEREBY;

21.2. ALL WORK AND ALL MATERIALS AND EQUIPMENT TO BE INCORPORATED THEREIN, WHETHER IN STORAGE ON OR OFF THE SITE, UNDER THE CARE, CUSTODY OR CONTROL OF THE CONTRACTOR OR ANY OF ITS SUBCONTRACTORS;

21.3. ANY OTHER PROPERTY AT THE SITE OR ADJACENT THERETO, INCLUDING TREES, SHRUBS, LAWNS, WALKS, PAVEMENTS, ROADWAY, STRUCTURES AND UTILITIES NOT DESIGNATED FOR DEMOLITION IN THE COURSE OF CONSTRUCTION.

22. CONTRACTOR SHALL MAINTAIN PUBLIC ACCESS ON GENE HURLEY ROAD AT ALL TIMES.

23. THE CONTRACTOR SHALL COMPLY WITH ALL APPLICABLE SAFETY CODES AND WITH ALL APPLICABLE LAWS, ORDINANCES, RULES, REGULATIONS AND LAWFUL ORDERS OF ANY PUBLIC, QUASI-PUBLIC OR OTHER AUTHORITY HAVING JURISDICTION FOR THE SAFETY OF PERSONS OR PROPERTY OR FOR THEIR PROTECTION AGAINST DAMAGE, INJURY OR LOSS, OR DESIGNED TO PROTECT THE ENVIRONMENT. THE CONTRACTOR SHALL ERECT AND MAINTAIN, AS REQUIRED BY EXISTING CONDITIONS AND PROGRESS OF THE WORK, ALL REASONABLE SAFEGUARDS FOR SAFETY AND PROTECTION, INCLUDING POSTING DANGER SIGNS AND OTHER WARNINGS AGAINST HAZARDS, PROMULGATING SAFETY REGULATIONS AND NOTIFYING OWNERS AND USERS OF ADJACENT UTILITIES OF THE EXISTENCE OF HAZARDS AND OF THE SAFETY REGULATIONS.

24. ALL DAMAGE OR LOSS TO ANY PROPERTY REFERRED TO IN CLAUSES 21.2 AND 21.3 CAUSED IN WHOLE OR IN PART BY THE CONTRACTOR, A SUBCONTRACTOR, OR BY ANYONE FOR WHOSE ACTS ANY OF THEM MAY BE LIABLE, SHALL BE REMEDIED BY THE CONTRACTOR, EXCEPT DAMAGE OR LOSS PROPERLY ATTRIBUTABLE SOLELY TO THE ACTS OR OMISSIONS OF THE OWNER, OR THE ENGINEER OR ANYONE EMPLOYED BY THEM, OR FOR WHOSE ACTS ANY OF THEM MAY BE LIABLE, AND NOT PROPERLY ATTRIBUTABLE IN WHOLE OR IN PART, TO THE FAULT OR NEGLIGENCE OF THE CONTRACTOR.

25. UNTIL FINAL ACCEPTANCE OF THE WORK BY OWNER, THE CONTRACTOR SHALL HAVE THE CHARGE AND CARE OF AND SHALL BEAR THE RISK OF INJURY OR DAMAGE, LOSS OR EXPENSE TO ANY PART THEREOF, OR TO ANY MATERIALS STORED ON SITE, BY THE ACTION OF THE ELEMENTS OR FROM ANY OTHER CAUSE WHETHER ARISING FROM THE EXECUTION OR NON-EXECUTION OF THE WORK. THE CONTRACTOR SHALL REBUILD, REPAIR, RESTORE AND MAKE GOOD ALL INJURIES OR DAMAGES TO ANY PORTION OF THE WORK OCCASIONED BY ANY OF THE ABOVE CAUSES BEFORE FINAL ACCEPTANCE AND SHALL BEAR THE EXPENSES THEREOF.

26. THOSE PARTS OF WORK IN PLACE WHICH ARE SUBJECT TO DAMAGE BECAUSE OF OPERATIONS BEING CARRIED ON ADJACENT THERETO SHALL BE COVERED, BOARDED UP OR SUBSTANTIALLY ENCLOSED WITH ADEQUATE PROTECTION BY THE CONTRACTOR AT CONTRACTOR'S EXPENSE.

27. ADEQUATE TRAFFIC CONTROL, BARRICADES AND FLAGMAN SERVICES SHALL BE FURNISHED AND MAINTAINED BY THE CONTRACTOR AT ALL POINTS WHERE CONVEYING EQUIPMENT ENGAGED ON THE WORK REGULARLY ENTERS ONTO OR CROSSES TRAFFIC-CARRYING ROADS.

28. THE CONTRACTOR SHALL COMPLY IN EVERY RESPECT WITH THE FEDERAL OCCUPATIONAL HEALTH AND SAFETY ACT OF 1970 AND ALL RULES AND REGULATIONS NOW OR HEREAFTER IN EFFECT UNDER SAID ACT, AND THE CONTRACTOR FURTHER AGREES TO COMPLY WITH ANY AND ALL APPLICABLE STATE LAWS AND REGULATIONS PERTAINING TO JOB SAFETY AND HEALTH.

29. THE CONTRACTOR SHALL PROTECT AND KEEP OWNER (INCLUDING THEIR AGENTS AND EMPLOYEES) FREE AND HARMLESS FROM ANY AND ALL LIABILITY, PUBLIC OR PRIVATE, PENALTIES, CONTRACTUAL OR OTHERWISE, LOSSES, DAMAGES, COSTS, ATTORNEY'S FEES, EXPENSES, CAUSES OF ACTION, CLAIMS OR JUDGMENTS RESULTING FROM THE FEDERAL OCCUPATIONAL SAFETY AND HEALTH ACT OF 1970 AS AMENDED OR ANY RULE OR REGULATION PROMULGATED THEREUNDER OR OF ANY STATE LAWS OR REGULATIONS PERTAINING TO JOB SAFETY AND HEALTH ARISING OUT OF OR IN ANY WAY CONNECTED WITH THE PERFORMANCE OF WORK OR WORK TO BE PERFORMED UNDER THIS CONTRACT, AND CONTRACTOR SHALL INDEMNIFY OWNER FROM ANY SUCH CLAIMS, PENALTIES, SUITS OR ACTIONS, PUBLIC OR PRIVATE, ADMINISTRATIVE OR JUDICIAL, INCLUDING ATTORNEY'S FEES PAID OR INCURRED BY OR ON BEHALF OF OWNER, JOINTLY OR SEVERALLY, AND/OR THEIR AGENTS AND EMPLOYEES. THE CONTRACTOR FURTHER AGREES, IN THE EVENT OF A CLAIMED VIOLATION OF ANY FEDERAL OR STATE SAFETY AND HEALTH LAW OR REGULATION ARISING OUT OF OR IN ANY WAY CONNECTED WITH THE PERFORMANCE OF WORK OR WORK TO BE PERFORMED UNDER THIS CONTRACT, OWNER MAY IMMEDIATELY TAKE WHATEVER ACTION IS DEEMED NECESSARY BY OWNER TO REMEDY THE CLAIMED VIOLATION. ANY AND ALL COSTS OR EXPENSES PAID OR INCURRED BY OWNER IN TAKING SUCH ACTION SHALL BE BORNE BY CONTRACTOR, AND CONTRACTOR AGREES TO PROTECT, HOLD HARMLESS AND INDEMNIFY OWNER AGAINST ANY AND ALL SUCH COSTS OR EXPENSES.

30. ALL WORK PERFORMED UNDER THE CONTRACT, AND ALL EQUIPMENT, APPLIANCES, TOOLS AND LIKE ITEMS USED IN THE WORK SHALL CONFORM TO APPLICABLE SAFETY CODES AND REGULATIONS OF ANY PUBLIC OR OTHER AUTHORITY HAVING JURISDICTION. IN THE EVENT OF CONFLICTING REQUIREMENTS, THE MORE STRINGENT INTERPRETATION OR REGULATION SHALL GOVERN.

31. THE CONTRACTOR SHALL DEVELOP AND IMPLEMENT AN EROSION CONTROL PLAN TO MINIMIZE EROSION AND ENSURE FUNCTIONING OF STORMWATER MANAGEMENT SYSTEM UPON COMPLETION OF CONSTRUCTION. EROSION CONTROL PLAN SHALL INCLUDE PROVISIONS TO STABILIZE DISTURBED AREAS WITHIN 14 CALENDAR DAYS OF THE DISTURBANCE WITH A WRITTEN LOG OF THE EVENTS. CONTRACTOR SHALL SUBMIT EROSION CONTROL PLAN TO ENGINEER FOR APPROVAL PRIOR TO CONSTRUCTION.

32. CONTRACTOR AND ITS SUBCONTRACTORS SHALL USE, HANDLE, TRANSPORT, AND DISPOSE OF ALL HAZARDOUS MATERIALS (AS DEFINED PARAGRAPH 39.) IN COMPLIANCE WITH ALL PRESENT FEDERAL, STATE AND LOCAL ENVIRONMENTAL, HEALTH OR SAFETY LAW, INCLUDING, BUT NOT LIMITED TO, ALL SUCH STATUTES, REGULATIONS, RULES, ORDINANCES, CODES, AND RULES OF COMMON LAW.

33. CONTRACTOR FURTHER AGREES THAT CONTRACTOR AND ITS SUBCONTRACTORS SHALL NOT CAUSE THE DISCHARGE, RELEASE OR DISPOSAL OF ANY HAZARDOUS MATERIAL CREATED BY ITS WORK ON OR ABOUT THE JOB SITE. IN THE EVENT OF ANY SPILL, RELEASE OR ANY OTHER REPORTABLE OCCURRENCE, CONTRACTOR SHALL NOTIFY THE APPROPRIATE GOVERNMENTAL AGENCY AND SHALL TAKE SUCH ACTION AS MAY BE NECESSARY TO MINIMIZE THE DELETERIOUS EFFECT OF SUCH SPILL ON PERSONS OR PROPERTY.

34. CONTRACTOR AND ITS SUBCONTRACTORS SHALL, UPON COMPLETION OF PERFORMANCE OF ALL DUTIES UNDER THIS CONTRACT, REMOVE ALL SUPPLIES, MATERIALS, AND WASTE CONTAINING AND HAZARDOUS MATERIAL FROM THE JOB SITE. CONTRACTOR SHALL BEAR FULL FINANCIAL RESPONSIBILITY, AS BETWEEN THE PARTIES OF THIS CONTRACT, FOR THE COMPLIANCE OF CONTRACTOR AND ITS SUBCONTRACTORS WITH THE PROVISIONS OF THIS PARAGRAPH.

35. CONTRACTOR AGREES TO INDEMNIFY, DEFEND, PROTECT AND HOLD THE OWNER HARMLESS FROM AND AGAINST ANY CLAIMS INCLUDING, WITHOUT LIMITATION, ACTUAL ATTORNEY'S FEES AND ANY COSTS OF INVESTIGATION, SOILS TESTING, GOVERNMENTAL APPROVALS, REMEDIATION AND CLEAN-UP ARISING OUT OF OR IN ANY WAY CONNECTED WITH THE FAILURE OF CONTRACTOR OR ITS SUBCONTRACTORS, OR THEIR AGENTS, EMPLOYEES, OFFICERS, OR REPRESENTATIVES, TO COMPLY WITH THE TERMS OF THIS ARTICLE.

36. SHOULD CONTRACTOR OR ITS SUBCONTRACTORS DISCHARGE, RELEASE OR DISPOSE OF ANY HAZARDOUS MATERIAL ON OR ABOUT THE JOB SITE IN VIOLATION OF REGULATIONS, CONTRACTOR SHALL IMMEDIATELY SO INFORM OWNER IN WRITING.

37. IN THE EVENT OF ANY SPILL, RELEASE OR ANY OTHER REPORTABLE OCCURRENCE, CONTRACTOR SHALL NOTIFY THE APPROPRIATE GOVERNMENTAL AGENCY AND SHALL TAKE SUCH ACTION AS MAY BE NECESSARY TO MINIMIZE THE DELETERIOUS EFFECT OF SUCH SPILL ON PERSONS OR PROPERTY. IN THE EVENT CONTRACTOR OR ITS SUBCONTRACTORS ENCOUNTER ON THE PREMISES ANY PIPELINE, UNDERGROUND STORAGE TANK OR OTHER CONTAINER, OF ANY KIND, THAT MAY CONTAIN A HAZARDOUS MATERIAL, OR ENCOUNTER MATERIAL REASONABLY BELIEVED TO BE A HAZARDOUS MATERIAL, CONTRACTOR SHALL IMMEDIATELY STOP WORK IN THE AREA AFFECTED AND REPORT THE CONDITION TO OWNER IN WRITING.

38. IF CONTRACTOR OR ITS SUBCONTRACTORS DO NOT COMPLY WITH FEDERAL AND STATE REQUIREMENTS, OWNER MAY, BUT IS NOT OBLIGATED TO, GIVE WRITTEN NOTICE OF VIOLATION TO CONTRACTOR. SHOULD CONTRACTOR OR ITS SUBCONTRACTORS FAIL TO COMPLY WITH THE REQUIREMENTS WITHIN TWENTY-FOUR (24) HOURS FROM THE TIME OWNER ISSUES SUCH WRITTEN NOTICE OF NONCOMPLIANCE OR WITHIN THE TIME OF AN ABATEMENT PERIOD SPECIFIED BY ANY GOVERNMENTAL AGENCY, WHICHEVER PERIOD IS SHORTER, CONTRACTOR SHALL BE IN MATERIAL DEFAULT OF THIS CONTRACT.

39. "HAZARDOUS MATERIAL" MEANS ANY SUBSTANCE: (A) THE PRESENCE OF WHICH REQUIRES INVESTIGATION OR REMEDIATION UNDER ANY PRESENT FEDERAL, STATE OR LOCAL STATUTE, REGULATION, ORDINANCE, RULE, CODE, ORDER, ACTION, POLICY OR COMMON LAW, OR (B) WHICH IS OR BECOMES DEFINED AS A "HAZARDOUS WASTE," "HAZARDOUS SUBSTANCE," POLLUTANT OR CONTAMINANT UNDER ANY PRESENT FEDERAL, STATE OR LOCAL STATUTE, REGULATION, RULE OR ORDINANCE OR AMENDMENTS THERETO INCLUDING, WITHOUT LIMITATION, THE COMPREHENSIVE ENVIRONMENTAL RESPONSE COMPENSATION AND LIABILITY ACT (42 U.S.C. SECTIONS 9601 ET SEQ.) AND/OR THE RESOURCE CONSERVATION AND RECOVERY ACT (42 U.S.C. SECTIONS 6901 ET SEQ.), OR (C) WHICH IS TOXIC, EXPLOSIVE, CORROSIVE, FLAMMABLE, INFECTIOUS, RADIOACTIVE, CARCINOGENIC, MUTAGENIC, OR OTHERWISE HAZARDOUS AND IS REGULATED BY ANY GOVERNMENTAL AUTHORITY, AGENCY, DEPARTMENT, COMMISSION, BOARD, AGENCY OR INSTRUMENTALITY OF THE UNITED STATES, THE STATE IN WHICH THE PREMISES ARE LOCATED OR ANY POLITICAL SUBDIVISION THEREOF, OR (D) THE PRESENCE OF WHICH ON THE PREMISES CAUSES OR THREATENS TO CAUSE A NUISANCE UPON THE PREMISES OR TO ADJACENT PROPERTIES OR POSES OR THREATENS TO POSE A HAZARD TO THE HEALTH OR SAFETY OF PERSONS ON OR ABOUT THE PREMISES, OR (E) WHICH CONTAINS GASOLINE, DIESEL FUEL OR OTHER PETROLEUM HYDROCARBONS, OR (F) WHICH CONTAINS POLYCHLORINATED BIPHENYLS (PCBS), ASBESTOS, LEAD OR UREA FORMALDEHYDE FOAM INSULATION.

40. THE EXISTING UTILITIES SHOWN ARE APPROXIMATE. THE CONTRACTOR SHALL FIELD LOCATE ALL EXISTING UTILITIES AS TO SIZE, LOCATION, AND ELEVATION. THE CONTRACTOR SHALL NOTIFY THE ENGINEER OF ANY AND ALL CONFLICTS PRIOR TO BEGINNING CONSTRUCTION.

41. IF ANY TESTING, INSPECTION OR APPROVAL REVEAL DEFECTIVE WORK, CONTRACTOR SHALL NOT BE ENTITLED TO RECEIVE ANY ASSOCIATED COSTS AND THE OWNER SHALL BE ENTITLED TO DEDUCT FROM THE CONTRACT PRICE, BY ISSUING A CHANGE ORDER, OWNER'S COSTS ARISING OUT OF THE DEFECTIVE WORK, INCLUDING COSTS OF REPEATED PROCEDURES, COMPENSATION FOR OWNER AUTHORIZED REPRESENTATIVE, DESIGN ENGINEER'S SERVICES, FIELD REPRESENTATIVE SERVICES, AND OTHER RELATED COSTS.

42. ENGINEER SHALL REVIEW RED LINE (AS-BUILT) DRAWINGS MONTHLY AT ALTERNATE BI-WEEKLY JOB COORDINATION MEETINGS. THE DRAWINGS CAN BE PROVIDED BY THE OWNER'S AUTHORIZED REPRESENTATIVE OR THE CONTRACTOR. NO PERIODIC PAY REQUESTS WILL BE PROCESSED UNTIL THIS PROVISION IS MET.

43. TYPE AND HEIGHT (NOT-TO-EXCEED) OF CONSTRUCTION EQUIPMENT:
TRUCKS (DUMP, FLATBED, PANEL, PICKUP, CONCRETE) – 35 FEET

FRONT END LOADERS – 35 FEET
DOZERS – 35 FEET
CRANE – 50 FEET*
ROLLERS AND COMPACTORS – 35 FEET

*NOTE – CONSTRUCTION EQUIPMENT LOCATIONS SHALL NOT VIOLATE RUNWAY TRANSITIONAL SURFACES AND RUNWAY APPROACH ZONE HEIGHT LIMITATIONS PER SAFETY DURING CONSTRUCTION PLAN EXCEPT UNDER SPECIAL WAIVER CONDITIONS. APPROPRIATE WAIVERS MUST BE OBTAINED BY THE OWNER FROM FAA.

44. THE FOLLOWING FAA ADVISORY CIRCULARS SHALL APPLY TO THIS PROJECT:
AC 150/5300-13A-CHANGE 1 AIRPORT DESIGN
AC 150/5340-18F STANDARDS FOR AIRPORT SIGN SYSTEMS
AC 150/5340-30J DESIGN AND INSTALLATION DETAILS FOR VISUAL AIDS
AC 150/5370-10G STANDARDS FOR SPECIFYING CONSTRUCTION OF AIRPORTS
AC 150/5345-44K SPECIFICATION FOR RUNWAY AND TAXIWAY SIGNS
AC 150/5340-1L STANDARD FOR AIRPORT MARKINGS
AC 150/5345-46E SPECIFICATION FOR RUNWAY AND TAXIWAY LIGHT FIXTURES

45. CONTRACTOR SHALL ABIDE BY FEDERAL BUY AMERICAN REQUIREMENTS.

PERMITS:

1. THE CITY SHALL BE RESPONSIBLE FOR PAYING FOR ALL NECESSARY PERMITS. THE CONTRACTOR SHALL COMPLY WITH ALL APPLICABLE FEDERAL, STATE, AND LOCAL REGULATIONS IN REGARD TO NOISE CONTROL, EROSION CONTROL, DUST CONTROL, WATERSHED, AND EMISSIONS DURING CONSTRUCTION WHICH PERTAIN TO CONSTRUCTION ACTIVITIES. COPIES OF ALL PERMITS SHALL BE SUBMITTED TO THE ENGINEER FOR THEIR RECORDS.

2. AS REQUIRED UNDER ACT OF THE NATIONAL POLLUTANT DISCHARGE ELIMINATION SYSTEM (NPDES), THE CONTRACTOR SHALL PREPARE AND SUBMIT A NOTICE OF INTENT (NOI) AND A STORM WATER POLLUTION PREVENTION PLAN (SWPPP) TO THE FLORIDA DEPARTMENT OF ENVIRONMENTAL PROTECTION. A COPY OF THE NOI AND SWPPP SHALL BE SUBMITTED TO THE ENGINEER FOR THEIR RECORDS. THE CONTRACTOR SHALL BE RESPONSIBLE FOR KEEPING THE SWPPP CURRENT UNTIL PROJECT COMPLETION AND FINAL ACCEPTANCE OF THE WORK.

RELEASE FOR BID

N:\NICEVILLE-PROJECTS\028-DEFUNIAK AIRPORT\2019.0028.01 – TERMINAL DEVELOPMENT\000 CAD\1902801_COVER.DWG 1/18/2022 8:58 AM

AVCON
TRANSFORMING TODAY'S IDEAS INTO TOMORROW'S REALITY

JOHN R. COLLINS
FL LICENSE NO.: 75419
FBPR CERTIFICATE OF AUTHORIZATION NO. 5057

NO.	DATE	REVISION	BY

GENERAL NOTES

RELEASE FOR BID

AIRPORT TERMINAL AND HANGAR DEVELOPMENT

PREPARED FOR

DEFUNIAK SPRINGS MUNICIPAL AIRPORT

DESIGNED BY: J.C.
DRAWN BY: D.F.
CHECKED BY: T.N.
APPROVED BY: V.L.
PROJECT NO: 2019.028.01
DATE: NOVEMBER 2021

SHEET NUMBER
G-4

THIS DOCUMENT CONTAINS PRIVILEGED AND PROPRIETARY INFORMATION, ALL OF WHICH IS EXPRESSLY PROVIDED BY AVCON, INC., FOR USE BY THE INTENDED RECIPIENT, AND FOR A SPECIFIC PURPOSE. WITHOUT THE EXPRESS WRITTEN CONSENT OF AVCON, INC. ANY DISTRIBUTION, REPRODUCTION, OR OTHER USE OF THIS DOCUMENT, IN WHOLE OR IN PART, IS STRICTLY PROHIBITED

SAFETY NOTES (AIRFIELD):

1. SAFETY GUIDELINES – IN THE INTEREST OF SAFETY, THE CONTRACTOR IS ALSO DIRECTED TO ACQUAINT HIS/HER EMPLOYEES WITH THE PROVISIONS OF THE FOLLOWING FEDERAL AVIATION ADMINISTRATION ADVISORY CIRCULARS:

   AC 150/5370–2 – OPERATIONAL SAFETY ON AIRPORTS DURING CONSTRUCTION.
   AC 150/5210–5 – PAINTING, MARKING AND LIGHTING OF VEHICLES USED ON AN AIRPORT
   AC 150/5200–18 – AIRPORT SAFETY SELF–INSPECTION
   AC 150/5340–1 – STANDARDS FOR AIRPORT MARKINGS

2. AFTER COMPLETION OF WORK, THE CONTRACTOR SHALL RE–STRIPE ALL/ANY EXISTING RUNWAY, TAXIWAY, OR TAXILANE CENTERLINE MARKINGS WHICH WERE TEMPORARILY REMOVED FOR CONSTRUCTION OR DAMAGED DURING CONSTRUCTION, MATCHING ORIGINAL CONDITION TO THE SATISFACTION OF THE OWNER OR OWNER'S REPRESENTATIVE.

3. CONTRACTOR SHALL RELOCATE AND RESTORE AFTER COMPLETION OF CONSTRUCTION, ANY TAXIWAY CENTER LIGHTS, EDGE LIGHTS, OR GUIDANCE SIGNS THAT MAY EXIST WITHIN THE CONSTRUCTION AREA, IF REMOVED OR RELOCATED. CONTRACTOR SHALL PROVIDE "JUMPER CABLES" TO KEEP ELECTRICAL CIRCUITS IN OPERATION.

4. AIRPORT OPERATIONS – THE CONTRACTOR SHALL APPOINT SAFETY OFFICERS IN ACCORDANCE WITH THE PROJECT MANUAL. THE CONTRACTOR SHALL ALSO ACQUAINT ALL SUPERVISORS AND EMPLOYEES WITH THE ACTIVITIES OF THE DEFUNIAK SPRINGS AIRPORT AND OPERATIONS THAT ARE INHERENT AT THIS ACTIVE AIRPORT AND SHALL CONDUCT CONSTRUCTION ACTIVITIES TO CONFORM TO ALL ROUTINE AND EMERGENCY AIR TRAFFIC REQUIREMENTS AND GUIDELINES ON SAFETY SPECIFIED IN THE PROJECT MANUAL AND AS SPECIFIED BY THE FIELD REPRESENTATIVE AND THE FAA.

5. VEHICLE IDENTIFICATION – ALL CONTRACTOR VEHICLES THAT ARE AUTHORIZED TO OPERATE ON THE AIRPORT SHALL DISPLAY IN FULL VIEW ABOVE THE VEHICLE A 3' X 3' OR LARGER ORANGE AND WHITE CHECKERED FLAG, EACH CHECK BEING 1' SQUARE. COMPANY DECALS WITH NOT LESS THAN 6" LETTERS MAY BE SUBSTITUTED FOR FLAGS ON SUPERVISORY VEHICLES AND LIGHT TRUCKS. ALL VEHICLES OPERATING IN THE ACTIVE AIRPORT OPERATIONS AREA (AOA) DURING THE HOURS OF DARKNESS SHALL BE EQUIPPED WITH A FLASHING YELLOW DOME – TYPE LIGHT MOUNTED ON TOP OF THE VEHICLE AND OF SUCH INTENSITY TO CONFORM TO LOCAL CODES FOR MAINTENANCE AND EMERGENCY VEHICLES.

6. GROUND CONTROL – NO CONTRACTOR VEHICLES OR EQUIPMENT SHALL ACCESS OR CROSS ACTIVE RUNWAYS, TAXIWAYS, OBJECT FREE AREAS AND APPROACH CLEAR ZONES. ACCESS ONTO THE WORK AREA SHALL AS SHOWN ON SHEET G–6.

7. WORK REQUIRING PAVEMENT CLOSURE SHALL BE PERFORMED IN ACCORDANCE WITH THE SAFETY PLANS AND THE PROJECT MANUAL. NO RUNWAY, TAXIWAY, APRON OR AIRPORT ROADWAY SHALL BE CLOSED WITHOUT APPROVAL OF AIRPORT MANAGEMENT. TO ENABLE NECESSARY NOTICES TO AIRMEN (NOTAMS) OR ADVISORIES TO AIRPORT SERVICES OR TENANTS, A MINIMUM OF SEVENTY–TWO (72) HOURS WRITTEN NOTICE OF REQUESTED CLOSING SHALL BE DIRECTED TO THE ENGINEER, WHO WILL COORDINATE THE REQUEST WITH AIRPORT OPERATIONS.

8. OPEN TRENCHES – ANY CONSTRUCTION ABOVE 3" OR OPEN TRENCHES IN EXCESS OF 3" WITHIN 150' OF AN ACTIVE RUNWAY CENTERLINE OR WITHIN 48' FROM AN ACTIVE TAXIWAY CENTERLINE WILL REQUIRE CLOSURE OF THE AFFECTED RUNWAY OR TAXIWAY, UNLESS OTHERWISE APPROVED BY THE OWNER. (SEE NOTE 4 ABOVE). ALL TRENCHING MUST BE CONSTRUCTED TO MEET ALL FEDERAL, STATE (FLORIDA TRENCH SAFETY ACT) AND LOCAL LAWS (INCLUDES OSHA STANDARDS).

9. TRENCH MARKING – OPEN TRENCHES AND EXCAVATIONS LOCATED WITHIN 200' FROM AN ACTIVE TAXIWAY CENTERLINE SHALL BE PROMINENTLY MARKED WITH FLAGS AND LIGHTED BY APPROVED LIGHT UNITS (FLARE POTS NOT ALLOWED) DURING HOURS OF RESTRICTED VISIBILITY AND DARKNESS. THE CONTRACTOR WILL ENSURE THAT AN EMPLOYEE REMAINS ON–CALL TWENTY–FOUR (24) HOURS PER DAY FOR EMERGENCY MAINTENANCE OF HAZARD LIGHTING AND BARRICADES. NO OPEN TRENCHES ARE PERMITTED ADJACENT TO ACTIVE AOA, UNLESS APPROVED BY AIRSIDE OPERATIONS. THESE TRENCHES SHALL BE BACKFILLED WHEN THE CONTRACTOR IS NOT PERFORMING CONSTRUCTION IN THESE TRENCHES. DITCHES OR EXCAVATIONS PERMITTED TO REMAIN OPEN SHALL BE COMPLETELY ENCLOSED WITHIN AIRPORT–TYPE BARRICADES AND PROPERLY LIGHTED. INDIVIDUAL FLAGS AND/OR LIGHTS WILL NOT BE PERMITTED AROUND OPEN TRENCHES/EXCAVATIONS DURING NIGHTTIME HOURS.

10. OPEN FLAME – OPEN FLAME, WELDING OR TORCH–CUTTING OPERATIONS ARE PROHIBITED UNLESS ADEQUATE FIRE AND SAFETY PRECAUTIONS HAVE BEEN TAKEN AND THE PROCEDURE APPROVED BY AIRPORT OPERATIONS.

11. STOCKPILE EROSION AND DUST CONTROL – STOCKPILED MATERIAL AND OPEN EXCAVATIONS SHALL BE TREATED IN SUCH A MANNER AS TO PREVENT MOVEMENT RESULTING FROM AIRCRAFT BLAST OR WIND CONDITIONS IN EXCESS OF 10 KNOTS. STOCKPILED MATERIALS SHALL NOT BE PERMITTED WITHIN 250' OF AN ACTIVE RUNWAY CENTERLINE OR 65.5' FROM AN ACTIVE TAXIWAY CENTERLINE.

12. DEBRIS CONTROL – DEBRIS, WASTE AND LOOSE MATERIAL SHALL NOT BE ALLOWED ON ACTIVE AIRCRAFT MOVEMENT AREAS OR APRONS. IF OBSERVED TO BE ON ACTIVE AIRCRAFT MOVEMENT AREAS OR APRONS, THE MATERIAL WILL BE REMOVED IMMEDIATELY BY THE CONTRACTOR. THE FIELD REPRESENTATIVE MAY DIRECT THAT DEBRIS PROBLEMS DURING CONSTRUCTION NOT CORRECTED BY THE CONTRACTOR BE CORRECTED BY OTHERS AT THE EXPENSE OF CONTRACTOR. THE CONTRACTOR SHALL BE RESPONSIBLE TO KEEP THE PAVEMENTS ADJACENT TO THE WORK AREA CLEAR OF DEBRIS AND FOD AT ALL TIMES.

13. INSPECTION BY OPERATIONS – PRIOR TO OPENING FOR AIRCRAFT USE AND THE DEPARTURE OF THE CONTRACTOR'S WORK CREWS, THE FIELD REPRESENTATIVE WILL ARRANGE FOR INSPECTION BY AIRPORT OPERATIONS OF ANY RUNWAY, TAXIWAY SAFETY AREA, OR APRON THAT HAS BEEN CLOSED FOR WORK, OR THAT HAS BEEN USED FOR A CROSSING POINT OR HAUL ROUTE BY THE CONTRACTOR. THESE AREAS MUST COMPLY WITH THE SAFETY REQUIREMENTS DEFINED BY FEDERAL AVIATION REGULATIONS PART 139 AND INSPECTED BY THE DESIGNATED OPERATION'S INSPECTOR BEFORE PERMISSION FOR THE CONTRACTOR'S WORK CREWS TO DEPART WILL BE GRANTED.

14. NO SMOKING SHALL BE ALLOWED WITHIN THE AOA.

15. DESIGNATED AIRPORT REPRESENTATIVE SHALL HAVE THE AUTHORITY TO DISCONTINUE CONSTRUCTION OPERATIONS AT ANY TIME, FOR ANY REASON. THE AIRPORT REPRESENTATIVE CAN REQUIRE THE CONTRACTOR TO LEAVE THE AIRSIDE AOA AND/OR AIRPORT PROPERTY AND EVACUATE THE WORK AREA WITHIN THIRTY (30) MINUTES AFTER RECEIVING NOTICE.

16. ALL BARRICADE LIGHTING, TEMPORARY SIGNAGE AND COVERS SHALL BE VERIFIED BY THE CONTRACTOR FOR PROPER OPERATION AT THE END OF EACH DAY BEFORE THE CONTRACTOR CEASES OPERATION. THE INTENSITY OF THE LIGHTS AND THE SPACING FOR BARRICADES, SHALL BE ADEQUATE TO DELINEATE THE HAZARDOUS AREA WITHOUT AMBIGUITY. NO MORE THAN 10% OF THE LIGHTS FOR BARRICADES SHALL BE INOPERABLE AT ANY TIME, AND AT NO TIME SHALL TWO (2) CONSECUTIVE LIGHTS BE INOPERABLE. THE CONTRACTOR SHALL IMMEDIATELY REPLACE ANY BARRICADES, LIGHTS OR FLAGS WHICH IN THE OPINION OF THE FIELD REPRESENTATIVE OR AIRPORT OPERATIONS ARE NOT ADEQUATE.

17. THE CONTRACTOR SHALL AT ALL TIMES MAINTAIN VEHICLES, EQUIPMENT AND MATERIALS OUTSIDE THE AIRCRAFT CONTAINMENT LINE DURING CONSTRUCTION. THE CONTRACTOR MAY BE REQUIRED TO WORK 24 HOURS EACH DAY IN DESIGNATED AREAS IN ORDER TO MINIMIZE THE SHUT DOWN TIME. NO ADDITIONAL CONTRACT COST SHALL BE ALLOWED FOR WORK TO BE ACCOMPLISHED "AROUND THE CLOCK" (24 HOURS PER DAY).

18. ALL MARKINGS WITHIN THE CONSTRUCTION AREA IN CONFLICT WITH THE SAFETY PLANS SHALL BE REMOVED & REPLACED AS REQUIRED AND IN ACCORDANCE WITH P–620 OF THE PROJECT MANUAL.

19. CONTRACTOR IS REQUIRED TO MONITOR RADIO COMMUNICATIONS AT ALL TIMES. GROUND CONTROL FREQUENCY: 123.05.

20. EQUIPMENT OR MATERIALS SHALL NOT EXCEED A HEIGHT OF 50 FT WITHOUT PRIOR APPROVAL FROM ENGINEER.

21. CONTRACTOR SHALL REMOVE ALL EQUIPMENT FROM OBJECT FREE AREAS DURING HOURS OF AIRCRAFT OPERATIONS.

22. THE FINAL LIFT OF ASPHALT SHALL BE CONSTRUCTED DURING DAYLIGHT HOURS, UNLESS OTHERWISE APPROVED BY THE ENGINEER.

23. ACCESS TO THE SITE – CONTRACTOR'S ACCESS TO THE SITE SHALL BE AS SHOWN ON THE PLANS OR AS DIRECTED BY THE FIELD REPRESENTATIVE. THE CONTRACTOR SHALL NOT PERMIT ANY UNAUTHORIZED PERSONNEL OR TRAFFIC ON THE SITE. THE CONTRACTOR SHALL BE RESPONSIBLE FOR TRAFFIC CONTROL TO AND FROM THE VARIOUS CONSTRUCTION AREAS ON THE SITE. THE CONTRACTOR IS RESPONSIBLE FOR THE IMMEDIATE CLEANUP OF ANY DEBRIS DEPOSITED ALONG ANY ACCESS ROAD AS A RESULT OF THE CONSTRUCTION TRAFFIC. DIRECTIONAL SIGNING AT THE ACCESS GATE AND ALONG THE DELIVERY ROUTE TO THE STORAGE AREA OR WORK SITE SHALL NOT BE PERMITTED.

24. MATERIALS DELIVERY TO THE SITE – ALL CONTRACTOR'S MATERIAL ORDERS FOR DELIVERY TO THE SITE WILL USE THE ACCESS POINT AT THE CONTRACTOR'S STAGING AREA AS A DELIVERY ADDRESS AT THE AIRPORT. ALL ASSOCIATED COSTS SHALL BE INCIDENTAL TO VARIOUS OTHER BID ITEMS.

25. ALL ACCESS GATES SHALL REMAIN LOCKED OR MONITORED AT ALL TIMES. THE COST OF PROVIDING FLAGGER AND SECURITY GUARDS, IF NEEDED, SHALL BE INCIDENTAL AND INCLUDED IN THE VARIOUS CONTRACT ITEMS.

RELEASE FOR BID

TRANSFORMING TODAY'S IDEAS INTO TOMORROW'S REALITY

THIS DOCUMENT CONTAINS PRIVILEGED AND PROPRIETARY INFORMATION, ALL OF WHICH IS EXPRESSLY PROVIDED BY AVCON, INC., FOR USE BY THE INTENDED RECIPIENT, AND FOR A SPECIFIC PURPOSE. WITHOUT THE EXPRESS WRITTEN CONSENT OF AVCON, INC. ANY DISTRIBUTION, REPRODUCTION, OR OTHER USE OF THIS DOCUMENT, IN WHOLE OR IN PART, IS STRICTLY PROHIBITED

JOHN R. COLLINS
FL LICENSE NO.: 75419
FBPR CERTIFICATE OF AUTHORIZATION NO. 5057

NO.	DATE	REVISION	BY

SAFTEY & SECURITY NOTES

RELEASE FOR BID

AIRPORT TERMINAL AND HANGAR DEVELOPMENT

PREPARED FOR

DEFUNIAK SPRINGS MUNICIPAL AIRPORT

DESIGNED BY:	J.C.
DRAWN BY:	D.F.
CHECKED BY:	T.N.
APPROVED BY:	V.L.
PROJECT NO:	2019.028.01
DATE:	NOVEMBER 2021

SHEET NUMBER

G-5

JUN NICEWILLE - PROJECTS\028 -DEFUNIAK AIRPORT\2019.028.01 – TERMINAL DEVELOPMENT\000 CAD\100801 COVER.DWG 1/18/2022 8:58 AM

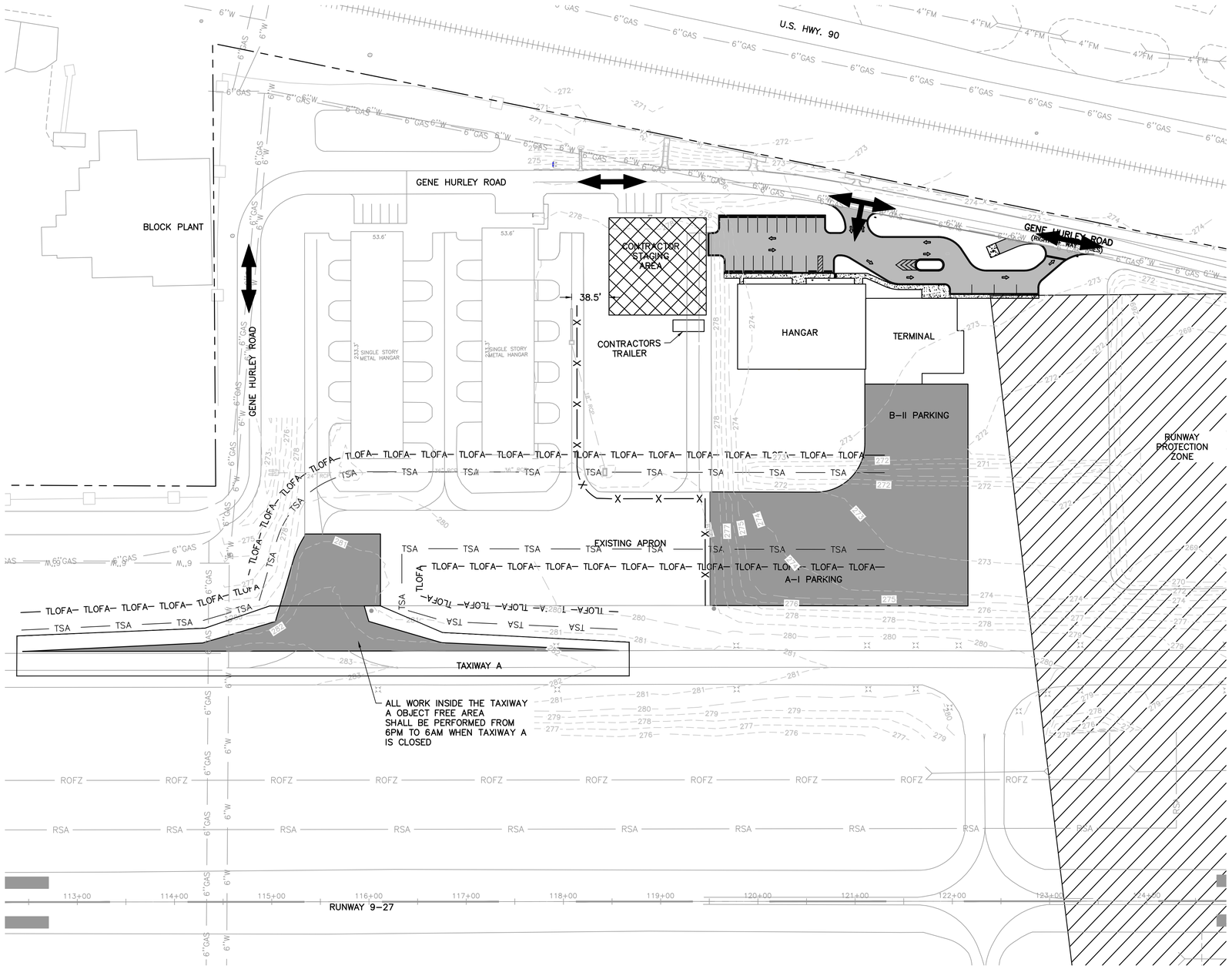

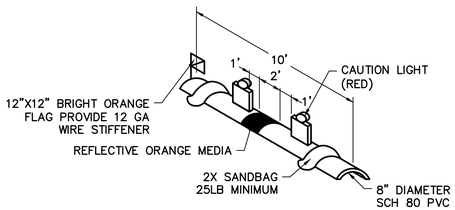

CAUTION LIGHTS TO BE RED IN COLOR AND FLASHING DURING HOURS OF DARKNESS OR REDUCED VISIBILITY. UNITS TO BE PLACED ADJACENT TO EACH OTHER. ALTERNATE TYPES OF BARRICADES MAY BE APPROVED ON A CASE BY CASE BASIS. PAYMENT FOR BARRICADES SHALL BE INCIDENTAL TO PAY ITEM C–105–1.

CONSTRUCTION BARRICADE DETAIL

N.T.S.

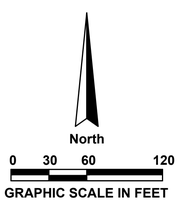

NOTES:

STAGING/STORAGE AREAS:

1. THE EXACT LIMITS OF THE CONTRACTOR'S STAGING AND STORAGE AREA SHALL BE ESTABLISHED BY THE CONTRACTOR WITH THE APPROVAL OF THE ENGINEER IN THE AREAS GENERALLY AS SHOWN ON THE PLANS. ANY AND ALL REQUIRED UTILITIES FOR THE CONTRACTOR'S OPERATIONS SHALL BE ARRANGED FOR AND PAID FOR BY THE CONTRACTOR DIRECTLY WITH THE APPROPRIATE UTILITY AGENCIES. UTILITY ARRANGEMENTS SHALL BE SUBJECT TO THE APPROVAL OF THE ENGINEER. THE CONTRACTOR SHALL PROVIDE PROPER AND SANITARY TOILET FACILITIES FOR HIS/HER EMPLOYEES.
2. CONTRACTOR SHALL USE NON–GRAVEL STABILIZATION, TO MINIMIZE FOREIGN OBJECT DEBRIS DURING CONSTRUCTION ACTIVITIES AND PREVENT ALL OFFSITE SEDIMENT TRACKING. CONTRACTOR SHALL INSTALL TYPE "III" SILT FENCE 5' OUTSIDE THE PERIMETER OF THE STAGING AREA.

HAUL AND ACCESS ROADS:

1. THE CONTRACTOR SHALL BE RESPONSIBLE FOR CONSTRUCTING AND MAINTAINING HAUL AND ACCESS ROADS WITHIN THE LIMITS OF CONSTRUCTION, STAGING AREAS, AND BETWEEN CONSTRUCTION AREAS, AND FOR THE DUST CONTROL OF THESE ROADS. ALL COSTS ASSOCIATED WITH CONSTRUCTING AND MAINTAINING HAUL ROADS SHALL BE CONSIDERED A SUBSIDIARY OBLIGATION OF THE PROJECT AND SHALL NOT BE PAID FOR SEPARATELY.
2. ANY ADDITIONAL HAUL OR ACCESS ROADS REQUESTED BY THE CONTRACTOR FOR HIS OPERATIONS OUTSIDE THE LIMITS OF CONSTRUCTION SHALL BE CONSTRUCTED BY THE CONTRACTOR AT LOCATIONS WHERE AND IF APPROVED BY THE ENGINEER AT NO ADDITIONAL COMPENSATION.
3. THE ENGINEER RESERVES THE RIGHT TO SHIFT THE LOCATION OF CONTRACTOR HAUL AND ACCESS ROUTES AS MAY BE DEEMED NECESSARY FOR THE ORDERLY PROGRESS OF THE OVERALL AIRPORT DEVELOPMENT PROJECT AT NO ADDITIONAL COMPENSATION.
4. ANY DAMAGE TO EXISTING ROADWAYS USED AS A HAUL OR ACCESS ROUTE SHALL BE CONSIDERED THE RESPONSIBILITY OF THE CONTRACTOR AND HE SHALL PROMPTLY REPAIR ANY DAMAGED ROADWAYS TO THEIR ORIGINAL CONDITION TO THE SATISFACTION OF THE ENGINEER WITH NO ADDITIONAL COMPENSATION. PRIOR TO BEGINNING THE WORK, THE CONDITION OF APPLICABLE ROADWAYS SHALL BE JOINTLY INSPECTED AND AGREED UPON BY THE CONTRACTOR AND ENGINEER.
5. UPON COMPLETION OF THE PROJECT, THE CONTRACTOR SHALL RESTORE ALL GRASSED, GRAVELED AND PAVED AREAS USED FOR HAUL ROADS TO A CLEAN AND NEAT CONDITION ACCEPTABLE TO THE OWNER. THE TERRAIN SHALL BE LEFT IN A SMOOTH, WELL GROOMED, AND GRADED–TO–DRAIN CONDITION INCLUDING THE REFILLING OF ANY HOLES OR DEPRESSIONS OR THE LEVELING OF ANY RUTS AS MAY BE APPLICABLE. THE REFILLED MATERIAL SHALL BE SUITABLE TO THE AREA BEING RESTORED (GRAVEL IF AN EXISTING GRAVEL ROAD IS BEING RESTORED, SOIL IF A TURF AREA IS BEING RESTORED, ETC.). UPON ACCEPTANCE OF A HAUL ROAD RESTORED WITHIN A PREEXISTING TURF AREA, THE CONTRACTOR SHALL SOD THESE AREAS IN ACCORDANCE WITH THE PROJECT SPECIFICATIONS. NO DIRECT MEASUREMENT OR PAYMENT WILL BE MADE FOR THE CONSTRUCTION, MAINTENANCE, RESTORATION, REPAIR, GRAVELING, SODDING OF HAUL ROADS.

SAFETY NOTES:

1. CONTRACTOR'S EQUIPMENT AND VEHICLES SHALL REMAIN 70 FEET OR GREATER FROM TAXIWAY A CENTERLINE (EXTENDED) AT ALL TIMES.
2. CONTRACTOR SHALL YIELD TO AIRCRAFT AT ALL TIMES. CONTRACTOR SHALL YIELD RIGHT–OF–WAY IN AREAS LEASED BY OTHERS AT ALL TIMES.
3. EQUIPMENT HEIGHT SHALL NOT EXCEED 50 FEET ABOVE GROUND LEVEL UNLESS SPECIFICALLY REQUESTED BY CONTRACTOR AND APPROVED BY THE AIRPORT.
4. RESTRICTIONS INDICATED ON THIS SHEET SHALL APPLY AT ALL TIMES.
5. BARRICADE PLACEMENT TO BE COORDINATED WITH OWNER'S FIELD REPRESENTATIVE, 2 FEET FROM THE EDGE OF ALL EXISTING AFFECTED PAVEMENTS, UNLESS OTHERWISE SHOWN. BARRICADES SHALL BE CONTINUOUS (NO SPACES).
6. BARRICADE SECTIONS SHALL BE WHITE WITH ORANGE REFLECTIVE MEDIA. ALL INCIDENTAL CONNECTORS, SPACERS, SPLICE PLATES, ETC. SHALL BE PAINTED WHITE.
7. ALL BARRICADES SHALL BE CHECKED VISUALLY FOR SIGNS OF WEAR AND TEAR ON A WEEKLY BASIS AND SHALL BE REPAINTED WHEN DEEMED APPROPRIATE BY THE ENGINEER. THE CONDITIONS OF LIGHTING UNITS SHALL BE CHECKED DAILY. ALL LIGHT FIXTURES SHALL BE VERIFIED OPERATING BY THE CONTRACTOR ON A DAILY BASIS BEFORE THE CONTRACTOR CEASES OPERATION FOR THE DAY.
8. ALL BARRICADES SHALL BE MOVED AT LEAST ONCE EACH WEEK AND THE CONTRACTOR SHALL SWEEP THE DEBRIS WHICH HAS ACCUMULATED AND REMOVE FROM THE SITE. THE BARRICADES SHALL THEN BE REPLACED AT THE APPROPRIATE LOCATION.
9. THE CONTRACTOR SHALL INSTALL, MAINTAIN, AND REMOVE BARRICADES.

LEGEND

— TOFA —	TAXIWAY/TAXILANE OBJECT FREE AREA		EXISTING PAVEMENT
— TSA —	TAXIWAY/TAXILANE SAFETY AREA		CONTRACTOR STAGING AREA
	CONTRACTORS HAUL ROUTE		NON–GRAVEL STABILIZATION
— X —	CONSTRUCTION BARRICADE		

RELEASE FOR BID

AVCON
TRANSFORMING TODAY'S IDEAS INTO TOMORROW'S REALITY

JOHN R. COLLINS
FL LICENSE NO.: 75419
FBPR CERTIFICATE OF AUTHORIZATION NO. 5057

NO.	DATE	REVISION	BY

SAFETY DURING CONSTRUCTION & PHASING PLAN

RELEASE FOR BID

AIRPORT TERMINAL AND HANGAR DEVELOPMENT

PREPARED FOR
DEFUNIAK SPRINGS MUNICIPAL AIRPORT

DESIGNED BY:	J.C.
DRAWN BY:	D.F.
CHECKED BY:	T.N.
APPROVED BY:	V.L.
PROJECT NO:	2019.028.01
DATE:	NOVEMBER 2021

SHEET NUMBER
G-6

THIS DOCUMENT CONTAINS PRIVILEGED AND PROPRIETARY INFORMATION, ALL OF WHICH IS EXPRESSLY PROVIDED BY AVCON, INC. FOR USE BY THE INTENDED RECIPIENT, AND FOR A SPECIFIC PURPOSE. WITHOUT THE EXPRESS WRITTEN CONSENT OF AVCON, INC. ANY DISTRIBUTION, REPRODUCTION, OR OTHER USE OF THIS DOCUMENT, IN WHOLE OR IN PART, IS STRICTLY PROHIBITED

N:\NICOVILLE_PROJECTS\028_DEFUNIAK_AIRPORT\2019.028.01_TERMINAL_DEVELOPMENT\000_CAD\100801_COVER.DWG 1/18/2022 8:58 AM

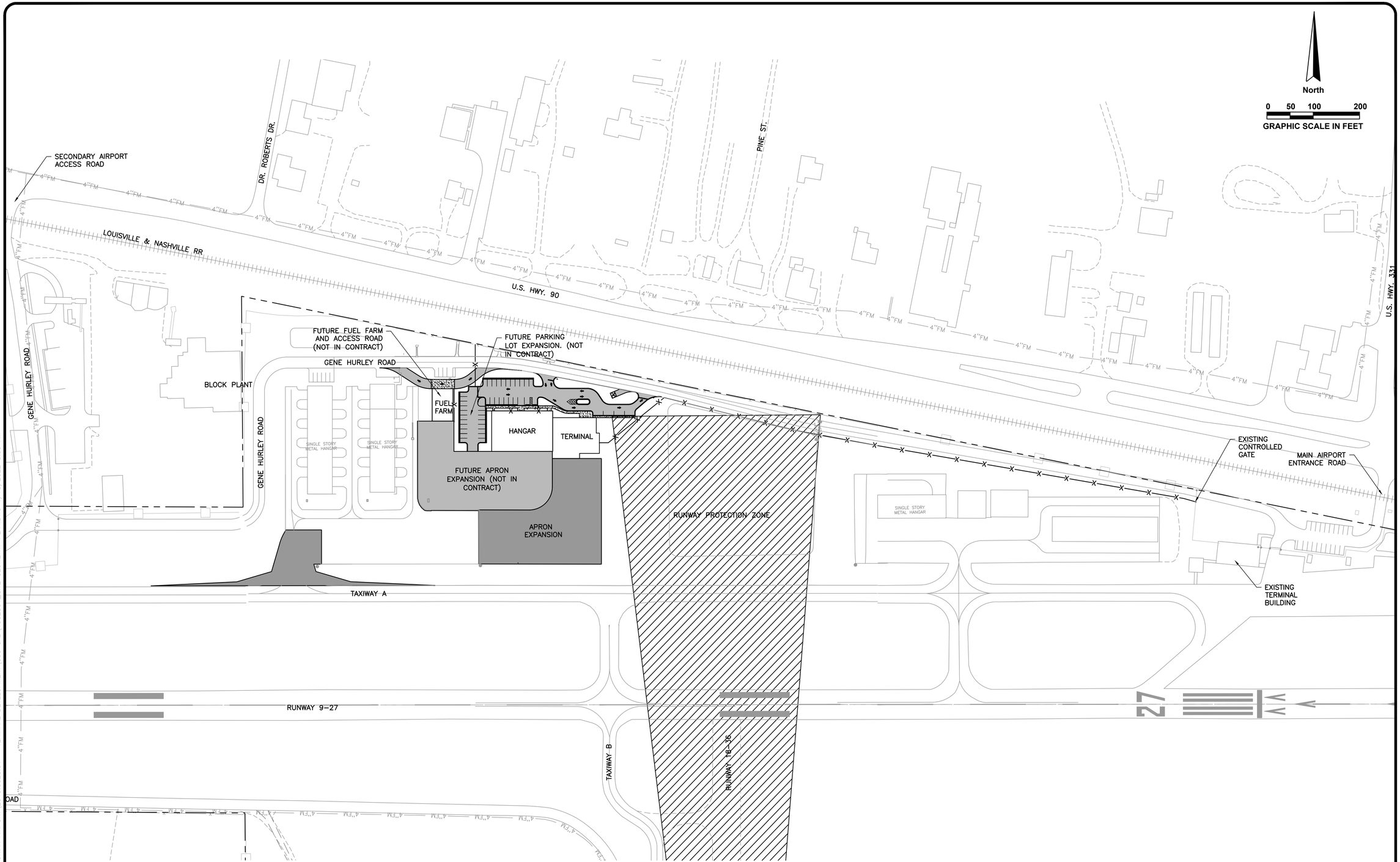

AVCON

TRANSFORMING TODAY'S IDEAS INTO TOMORROW'S REALITY

JOHN R. COLLINS
FL LICENSE NO.: 75419
FBPR CERTIFICATE OF AUTHORIZATION NO. 5057

NO.	DATE	REVISION	BY

OVERALL MASTER SITE PLAN

RELEASE FOR BID

AIRPORT TERMINAL AND HANGAR DEVELOPMENT

PREPARED FOR

DEFUNIAK SPRINGS MUNICIPAL AIRPORT

DESIGNED BY:	J.C.
DRAWN BY:	D.F.
CHECKED BY:	T.N.
APPROVED BY:	V.L.
PROJECT NO:	2019.028.01
DATE:	NOVEMBER 2021

SHEET NUMBER
C-1

THIS DOCUMENT CONTAINS PRIVILEGED AND PROPRIETARY INFORMATION, ALL OF WHICH IS EXPRESSLY PROVIDED BY AVCON, INC., FOR USE BY THE INTENDED RECIPIENT, AND FOR A SPECIFIC PURPOSE. WITHOUT THE EXPRESS WRITTEN CONSENT OF AVCON, INC. ANY DISTRIBUTION, REPRODUCTION, OR OTHER USE OF THIS DOCUMENT, IN WHOLE OR IN PART, IS STRICTLY PROHIBITED

N:\AVCON\FILE - PROJECTS\2019.028 - DEFUNIAK AIRPORT\2019.028.01 - TERMINAL DEVELOPMENT\000 CAD\100280\1 SITE GEOMETRY PLAN.DWG 1/18/2022 8:50 AM

LEGEND

- EXISTING CONDITIONS
- EXISTING FENCE LINE
- PROPOSED FENCE LINE
- PARCEL BOUNDARY
- APRON
  4" P-401 ASPHALT PAVEMENT
  8" P-211 LIMEROCK BASE
  12" P-154 STABILIZED SUBBASE
- LANDSIDE VEHICLE PAVEMENT SECTION
  2" P-401 ASPHALT PAVEMENT
  8" P-211 LIMEROCK BASE
  12" P-154 STABILIZED SUBBASE
- CONCRETE SIDEWALK

E HURLEY ROAD

GENE HURLEY ROAD
(RIGHT OF WAY VARIES)

PARKING LOT
(ADDITIVE ALTERNATE NO. 3)

11

9

HC HC

4

HANGAR
(ADDITIVE ALTERNATE NO. 4)
(GRADING FOR HANGAR BUILDING PAD UP TO FFE INCLUDED IN ADDITIVE ALTERNATE NO.3)

AIRPORT TERMINAL
(BASE BID)

GENE HURLEY ROAD

SINGLE STORY METAL HANGAR

SINGLE STORY METAL HANGAR

TAXIWAY A CONNECTOR
(ADDITIVE ALTERNATE NO. 7)

APRON EXPANSION
(ADDITIVE ALTERNATE NO. 6)

TAXIWAY A

NOTE:

1. BASE BID SHALL INCLUDE ALL TERMINAL IMPROVEMENTS, GRADING FOR THE TERMINAL BUILDING PAD, CONCRETE ENTRYWAY UP TO AND INCLUDING TRUNCATED ADA DOME PLATES, AND LANDSCAPING AND IRRIGATION WITHIN 20' OF THE TERMINAL.

North

0 15 30 60

GRAPHIC SCALE IN FEET

RELEASE FOR BID

N:\NICEVILLE_PROJECTS\028_DEFUNIAK_AIRPORT\2019.028.01_TERMINAL_DEVELOPMENT\000_CAD\100\801_SITE_GEOMETRY_PLAN.DWG 1/18/2022 8:50 AM

AVCON

TRANSFORMING TODAY'S IDEAS INTO TOMORROW'S REALITY

JOHN R. COLLINS
FL LICENSE NO.: 75419
FBPR CERTIFICATE OF AUTHORIZATION NO. 5057

NO.	DATE	REVISION	BY

ADDITIVE ALTERNATE PLAN

RELEASE FOR BID

AIRPORT TERMINAL AND HANGAR DEVELOPMENT

PREPARED FOR

DEFUNIAK SPRINGS MUNICIPAL AIRPORT

DESIGNED BY:	J.C.
DRAWN BY:	D.F.
CHECKED BY:	T.N.
APPROVED BY:	V.L.
PROJECT NO:	2019.028.01
DATE:	NOVEMBER 2021

SHEET NUMBER

C-2

THIS DOCUMENT CONTAINS PRIVILEGED AND PROPRIETARY INFORMATION, ALL OF WHICH IS EXPRESSLY PROVIDED BY AVCON, INC., FOR USE BY THE INTENDED RECIPIENT, AND FOR A SPECIFIC PURPOSE. WITHOUT THE EXPRESS WRITTEN CONSENT OF AVCON, INC. ANY DISTRIBUTION, REPRODUCTION, OR OTHER USE OF THIS DOCUMENT, IN WHOLE OR IN PART, IS STRICTLY PROHIBITED

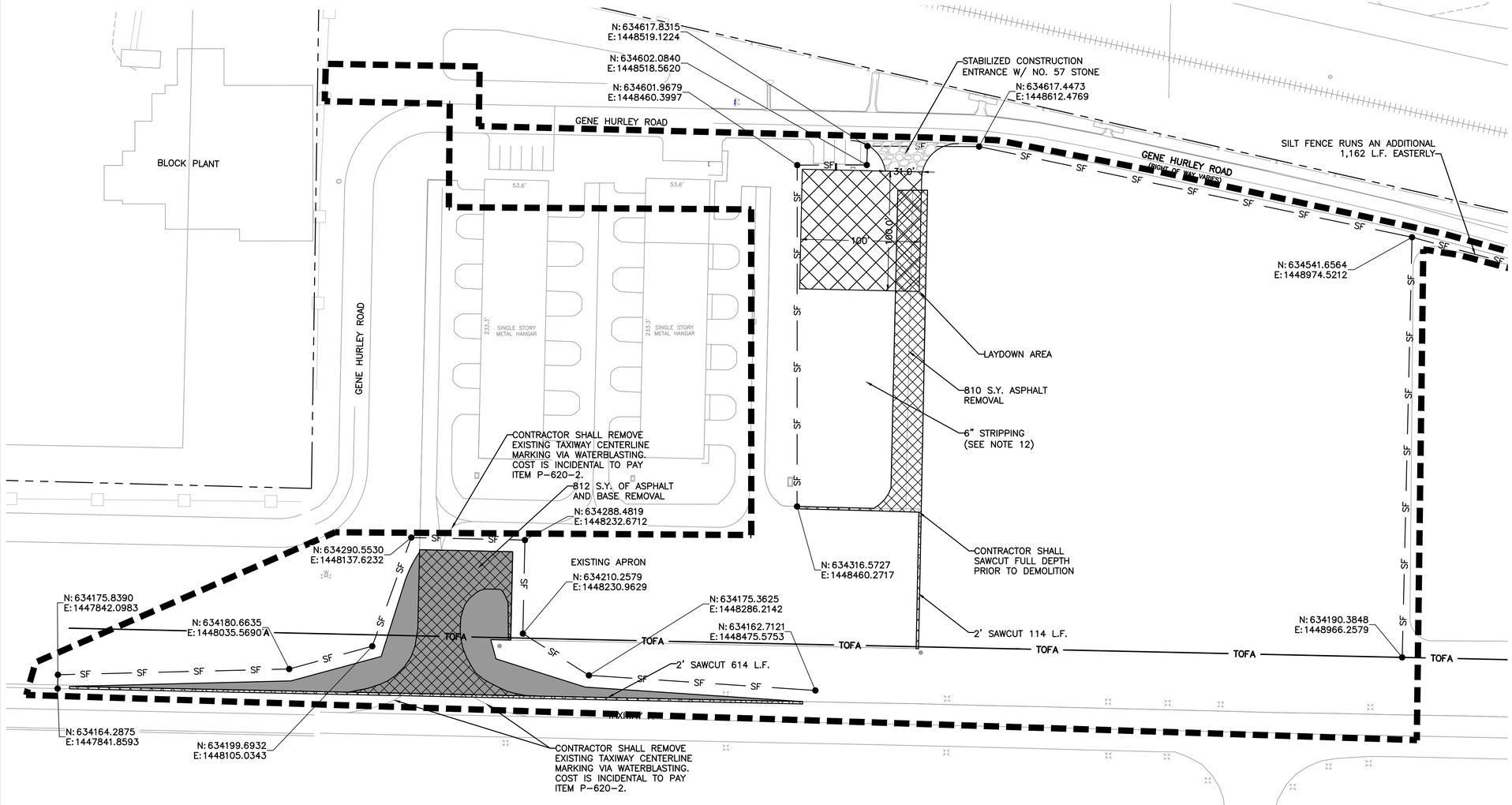

GENERAL NOTES:

1. ALL SEDIMENT CONTROL MEASURES SHOWN OF THESE PLANS ARE TO BE ADJUSTED TO MEET FIELD CONDITIONS AT THE TIME OF CONSTRUCTION AND SHALL BE CONSTRUCTED PRIOR TO ANY GRADING OR DISTURBANCE OF EXISTING SURFACE MATERIAL ON THE BALANCE OF THE SITE.
2. PERIODIC INSPECTION AND MAINTENANCE OF ALL SEDIMENT CONTROL DEVICES MUST BE PROVIDED TO ENSURE INTENDED PURPOSE IS ACCOMPLISHED AT NO ADDITIONAL COST TO THE OWNER.
3. ALL TEMPORARY EARTH BERMS AND DIVERSIONS ARE TO BE MACHINE COMPACTED AND SODDED FOR TEMPORARY VEGETATIVE COVER WITHIN 10 DAYS AFTER GRADING.
4. AFTER ANY SIGNIFICANT RAINFALL, SEDIMENT CONTROL STRUCTURES WILL BE INSPECTED FOR INTEGRITY, ANY DAMAGED DEVICES SHALL BE CORRECTED IMMEDIATELY AT NO ADDITIONAL COST TO THE OWNER.
5. THE IN PLACE SEDIMENT CONTROL MEASURES WILL BE MAINTAINED ON A CONTINUING BASIS UNTIL THE SITE IS PERMANENTLY STABILIZED AND ALL PERMIT REQUIREMENTS ARE MET.
6. THE CONSTRUCTION OF SWALES SHALL BE PERFORMED PRIOR TO CONSTRUCTION OF IMPERVIOUS AREAS.
7. EXISTING AND PROPOSED INLET OPENINGS IN THE PROJECT SHALL BE COVERED WITH FILTER FABRIC AND SURROUNDED BY TYPE III SILT FENCE ALONG WITH HAY BALES.
8. THE CONTRACTOR SHALL MINIMIZE THE EXTENT OF EXPOSED EARTH AT ONE TIME DURING CONSTRUCTION AND UTILIZE WATERING TRUCKS TO WET THE EARTH DURING DRY MONTHS TO MINIMIZE EROSION DUE TO WIND.
9. CONTRACTOR SHALL NOTIFY THE ENGINEER IF EROSION CONTROL ISSUES DEVELOP ONSITE.
10. SEE SHEET C-18 FOR EROSION CONTROL DETAILS.
11. SAW-CUT CLEAN EDGES AND MATCH EXISTING GRADE FOR ALL DEMOLITION TIE-IN LOCATIONS. APPLY TACK COAT ON ALL EDGES PER FDOT 300. SEE DETAIL THIS SHEET FOR DOUBLE SAW CUT ASPHALT DEMOLITION DETAIL.
12. STRIPPINGS (6" DEPTH) INTENDED FOR USE AS TOPSOIL PER FDOT 987.
13. SAW CUT MIN 2 FOOT BACK OR PER FLEX BUTT JOINT DETAIL, TYPICAL PAVEMENT SECTION AND DETAILS SHEET(S), WHICHEVER IS GREATER. BUTT JOINT REQUIRES TACK AND CLEAN SAW CUT FOR THE FULL LENGTH OF THE TIE-IN.
14. CONTRACTOR SHALL PROTECT EXISTING SIGNS TO ENSURE THEY ARE NOT DAMAGED DURING CONSTRUCTION. IF SIGNS ARE DAMAGED THEY SHALL BE REPLACED BY CONTRACTOR AT NO ADDITIONAL COST TO THE OWNER.
15. CONTRACTOR SHALL BE REQUIRED TO CLEAN EXISTING DRAINS AND PIPES. ALL PIPES AND DRAINS SHALL BE FREE FROM DIRT AND DEBRIS PRIOR TO OWNER ACCEPTING THE PROJECT.
16. ALL SILT FENCE SHALL BE INSTALLED WITHIN 7 DAYS OF ISSUANCE OF NOTICE TO PROCEED.

GENERAL SURVEY NOTES

1. THIS IS NOT A BOUNDARY SURVEY.
2. STATE PLANE COORDINATES ARE RELATIVE TO THE NORTH AMERICAN DATUM, ADJUSTMENT OF 1983 (NAD'83)(2011)(EPOCH: 2010.0000), AS DETERMINED BY STATIC GPS OBSERVATIONS POST-PROCESSED THROUGH NGS ONLINE POSITIONING USER SYSTEM (OPUS).
3. ALL DISTANCES ARE IN U.S. SURVEY FEET.
4. THIS SURVEY IS NOT VALID WITHOUT THE SIGNATURE AND THE ORIGINAL RAISED SEAL OF A FLORIDA LICENSED SURVEYOR AND MAPPER.
5. BY LAW, ADDITIONS OR DELETIONS TO SURVEY MAPS OR REPORTS BY OTHER THAN THE SIGNING PARTY OR PARTIES IS PROHIBITED WITHOUT WRITTEN CONSENT OF THE SIGNING PARTY OR PARTIES.
6. ALL ELEVATIONS SHOWN HEREON ARE BASED ON NORTH AMERICAN VERTICAL DATUM, ADJUSTMENT OF 1988 (NAVD'88).
7. BASE BENCHMARK: FLORIDA DEPARTMENT OF NATURAL RESOURCES BENCHMARK # BAY 28, HAVING A PUBLISHED ELEVATION OF 20.94 (NAVD'88).

SPECIAL UTILITY NOTE:

THE CONTRACTOR SHALL COORDINATE UTILITY LOCATES WITH AIRPORT 2 WEEKS PRIOR TO DIGGING. THE CONTRACTOR IS SOLELY RESPONSIBLE FOR THE LOCATION OF ALL EXISTING UTILITIES WITHIN THE PROJECT LIMITS. PRIOR TO ANY EXCAVATION OR DEMOLITION, THE CONTRACTOR SHALL PROVIDE A WRITTEN NOTICE (RETURN RECEIPT REQUESTED) TO EACH OF THE UTILITY COMPANIES AFFECTED BY THE PROJECT, ALONG WITH THE VARIOUS DEPARTMENTS OF FLORIDA SUNSHINE ONE CALL AS PRESCRIBED BY STATE LAW. THE CONTRACTOR SHALL PROVIDE THE OWNER AND THE OWNER'S REP WITH A COPY OF THE RECEIPT OF SAID WRITTEN NOTIFICATION TO EACH OF THE UTILITY COMPANIES OR BAY COUNTY DEPARTMENTS. THIS REQUIREMENT IS IN ADDITION TO ANY OTHER STATE LAWS REGARDING PUBLIC NOTIFICATION PRIOR TO EXCAVATION.

SEQUENCING OF ASPHALT PAVEMENT DEMOLITION:

1. FINAL FOOTPRINT OF NEW ASPHALT. CONTRACTOR SHALL SAW CUT AROUND THE FINAL FOOTPRINT TO THE FULL DEPTH OF THE ASPHALT PAVEMENT STRUCTURE.
2. THE CONTRACTOR SHALL THEN OFFSET 1' (ONE FOOT) MINIMUM TO THE INTERIOR SIDES OF THE PROPOSED ASPHALT AND SAW CUT THE FULL DEPTH OF THE ASPHALT PAVEMENT.
3. CONTRACTOR SHALL REMOVE ASPHALT PAVEMENT ON THE INTERIOR OF CUT 2 , BUT LEAVE REMAINING 1' OF ASPHALT BETWEEN CUTS 1 AND 2 FOR PROTECTION OF ASPHALT TO REMAIN.
4. CONTRACTOR MAY THEN REMOVE REMAINING ASPHALT STRIP BY BREAKING IT DOWN INTO SMALLER MORE MANAGEABLE SIZED PIECES FOR REMOVAL.
5. REMOVE SUBGRADE MATERIAL SUFFICIENT TO PLACE REQUIRED AMOUNT OF SUBBASE, BASE, AND ASPHALT PER PLAN. COMPACT SUBGRADE TO 100% OF THE MODIFIED PROCTOR VALUE AT OPTIMUM MOISTURE PER P-152.
6. PLACE NEW P-154 SUBBASE & P-209/211 BASE MATERIAL TO THICKNESS SPECIFIED IN PLANS, COMPACTING EACH TO 100% OF THE MODIFIED PROCTOR VALUE AT OPTIMUM MOISTURE PER P-154 & P-209/211.
7. CONTRACTOR SHALL OFFSET 2' (TWO FEET) MINIMUM TO THE EXTERIOR SIDES OF THE PROPOSED ASPHALT AND SAW CUT TO A DEPTH OF 2". THE 2' WIDE STRIP WILL THEN BE MILLED TO A DEPTH OF 2".
8. PAVE, FINISHED SURFACES TO MATCH EXISTING ASPHALT GRADES AT ALL COMMON EDGES (SEE GRADING PLANS).

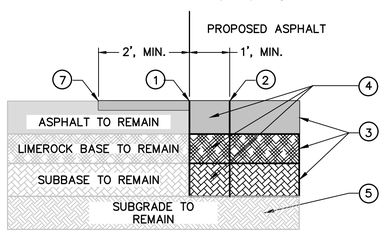

6 8 NOT SHOWN FOR CLARITY

DOUBLE SAW CUT - ASPHALT / ASPHALT DEMOLITION DETAIL
N.T.S.

CALL 2 WORKING DAYS BEFORE YOU DIG
IT'S THE LAW! DIAL 811
811 Know what's below. Call before you dig.
SUNSHINE STATE ONE CALL OF FLORIDA, INC.

LEGEND

- DEMOLITION
- EXISTING PAVEMENT
- EXISTING FENCE TO REMAIN
- SF — TYPE III SILT FENCE
- PROPOSED FENCE
- PROPOSED PROJECT LIMITS

RELEASE FOR BID

AVCON
TRANSFORMING TODAY'S IDEAS INTO TOMORROW'S REALITY

JOHN R. COLLINS
FL LICENSE NO.: 75419
FBPR CERTIFICATE OF AUTHORIZATION NO. 5057

NO.	DATE	REVISION	BY

EXISTING CONDITIONS, DEMOLITION & EROSION CONTROL PLAN

RELEASE FOR BID

AIRPORT TERMINAL AND HANGAR DEVELOPMENT

PREPARED FOR
DEFUNIAK SPRINGS MUNICIPAL AIRPORT

DESIGNED BY:	J.C.
DRAWN BY:	D.F.
CHECKED BY:	T.N.
APPROVED BY:	V.L.
PROJECT NO:	2019.028.01
DATE:	NOVEMBER 2021

SHEET NUMBER
C-3

THIS DOCUMENT CONTAINS PRIVILEGED AND PROPRIETARY INFORMATION, ALL OF WHICH IS EXPRESSLY PROVIDED BY AVCON, INC., FOR USE BY THE INTENDED RECIPIENT, AND FOR A SPECIFIC PURPOSE. WITHOUT THE EXPRESS WRITTEN CONSENT OF AVCON, INC. ANY DISTRIBUTION, REPRODUCTION, OR OTHER USE OF THIS DOCUMENT, IN WHOLE OR IN PART, IS STRICTLY PROHIBITED

N:\NICEVILLE_PROJECTS\028_DEFUNIAK_AIRPORT\2019.028.01 - TERMINAL DEVELOPMENT\000 CAD\100801_EXISTING AND DEMO.DWG, 1/18/2022 9:00 AM

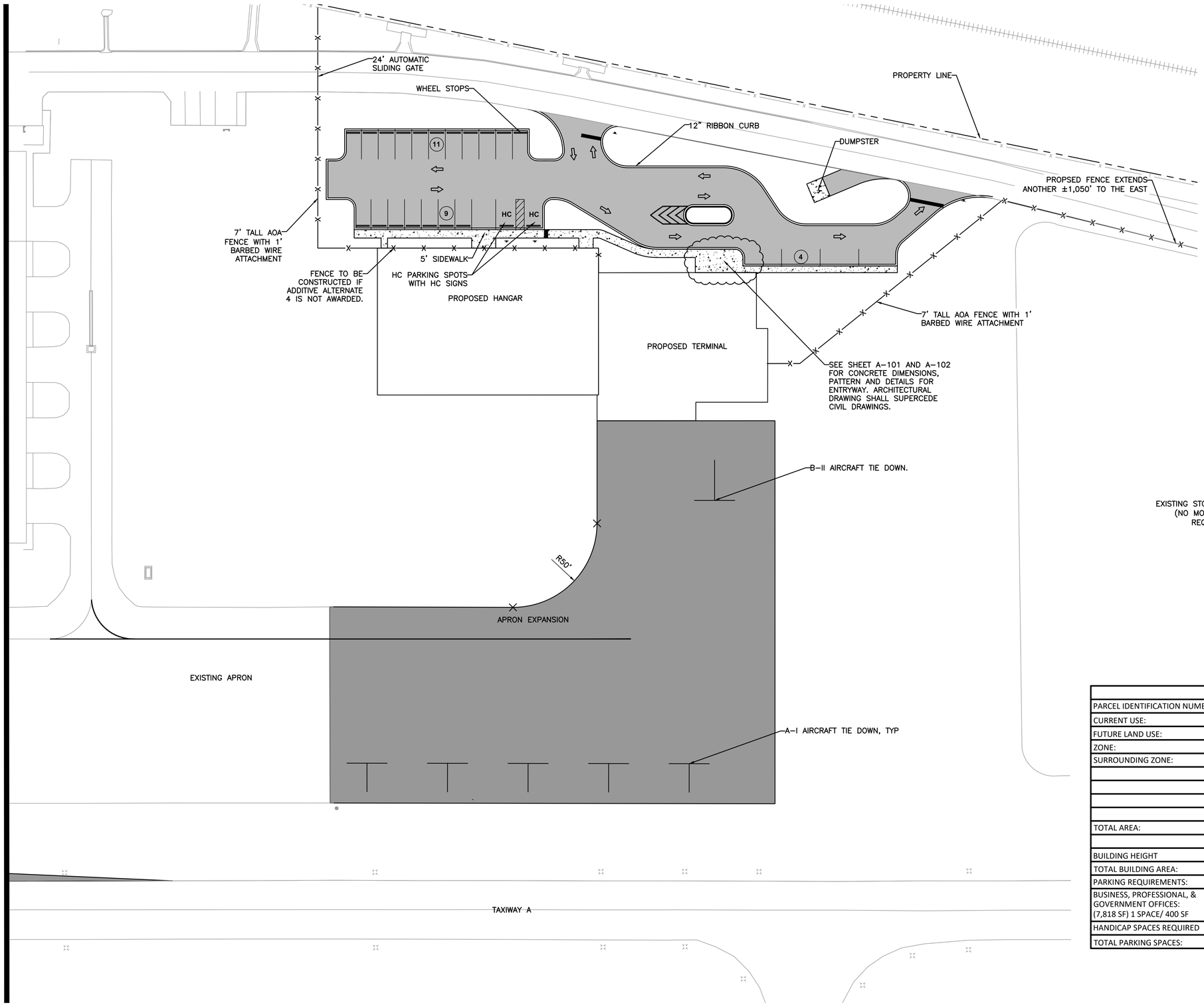

LEGEND

- PROPERTY LINE
- EXISTING CONDITIONS
- EXISTING FENCE LINE
- PROPOSED FENCE LINE
- PARCEL BOUNDARY
- APRON: 4" P-401 ASPHALT PAVEMENT, 8" P-211 LIMEROCK BASE, 12" P-154 STABILIZED SUBBASE
- LANDSIDE VEHICLE PAVEMENT SECTION: 2" P-401 ASPHALT PAVEMENT, 8" P-211 LIMEROCK BASE, 12" P-154 STABILIZED SUBBASE
- CONCRETE PAD/SIDEWALK

SITE DATA TABLE		
PARCEL IDENTIFICATION NUMBER:	28-3N-19-19000-005-0000	
CURRENT USE:	MUNICIPAL	
FUTURE LAND USE:	INDUSTRIAL	
ZONE:	LIGHT INDUSTRIAL	
SURROUNDING ZONE:		
NORTH	INDUSTRIAL	
WEST	COUNTY	
EAST	AGRICULTURAL	
SOUTH	R-2 MULTI-FAMILY	
TOTAL AREA:	13,721,400 SF	(315. ACRES)
	REQUIRED	PROVIDED
BUILDING HEIGHT	75 FT	40 FT
TOTAL BUILDING AREA:		7,818 SF
PARKING REQUIREMENTS:		
BUSINESS, PROFESSIONAL, & GOVERNMENT OFFICES: (7,818 SF) 1 SPACE/ 400 SF	20 SPACES	24 SPACES
HANDICAP SPACES REQUIRED	1 SPACES	2 SPACES
TOTAL PARKING SPACES:	20 SPACES	24 SPACES

RELEASE FOR BID

AVCON
TRANSFORMING TODAY'S IDEAS INTO TOMORROW'S REALITY

JOHN R. COLLINS
FL LICENSE NO.: 75419
FBPR CERTIFICATE OF AUTHORIZATION NO. 5057

NO.	DATE	REVISION	BY

SITE PLAN (SHEET 1 OF 2)

RELEASE FOR BID

AIRPORT TERMINAL AND HANGAR DEVELOPMENT

PREPARED FOR

DEFUNIAK SPRINGS MUNICIPAL AIRPORT

DESIGNED BY:	J.C.
DRAWN BY:	D.F.
CHECKED BY:	T.N.
APPROVED BY:	V.L.
PROJECT NO:	2019.028.01
DATE:	NOVEMBER 2021

SHEET NUMBER
C-4

THIS DOCUMENT CONTAINS PRIVILEGED AND PROPRIETARY INFORMATION, ALL OF WHICH IS EXPRESSLY PROVIDED BY AVCON, INC., FOR USE BY THE INTENDED RECIPIENT, AND FOR A SPECIFIC PURPOSE. WITHOUT THE EXPRESS WRITTEN CONSENT OF AVCON, INC. ANY DISTRIBUTION, REPRODUCTION, OR OTHER USE OF THIS DOCUMENT, IN WHOLE OR IN PART, IS STRICTLY PROHIBITED

N:\NICOVILLE_PROJECTS\028_DEFUNIAK_AIRPORT\2019.028.01_TERMINAL_DEVELOPMENT\000_CAD\1902801_SITE_GEOMETRY_PLAN.DWG 1/18/2022 9:01 AM

LEGEND

- EXISTING CONDITIONS
- EXISTING FENCE LINE
- PROPOSED FENCE LINE
- PARCEL BOUNDARY
- APRON CONNECTOR
  4" P-401 ASPHALT PAVEMENT
  8" P-211 LIMEROCK BASE
  12" P-154 STABILIZED SUBBASE
- LANDSIDE VEHICLE PAVEMENT SECTION
  2" P-401 ASPHALT PAVEMENT
  8" P-211 LIMEROCK BASE
  12" P-154 STABILIZED SUBBASE
- CONCRETE PAD/SIDEWALK

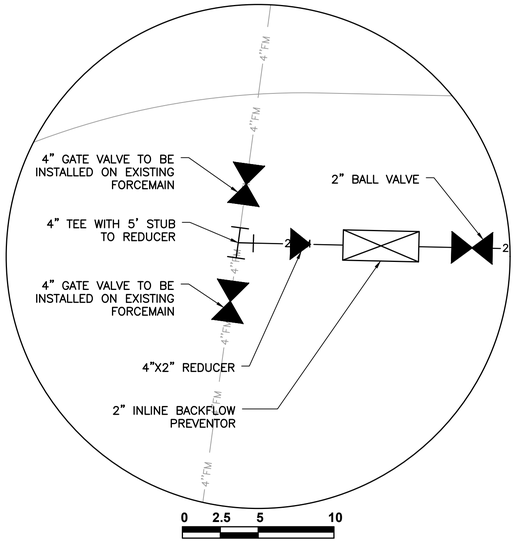

RELEASE FOR BID

AVCON

TRANSFORMING TODAY'S IDEAS INTO TOMORROW'S REALITY

JOHN R. COLLINS
FL LICENSE NO.: 75419
FBPR CERTIFICATE OF AUTHORIZATION NO. 5057

NO.	DATE	REVISION	BY

SITE PLAN (SHEET 2 OF 2)

RELEASE FOR BID

AIRPORT TERMINAL AND HANGAR DEVELOPMENT

PREPARED FOR

DEFUNIAK SPRINGS MUNICIPAL AIRPORT

DESIGNED BY:	J.C.
DRAWN BY:	D.F.
CHECKED BY:	T.N.
APPROVED BY:	V.L.
PROJECT NO:	2019.028.01
DATE:	NOVEMBER 2021

SHEET NUMBER
C-5

THIS DOCUMENT CONTAINS PRIVILEGED AND PROPRIETARY INFORMATION, ALL OF WHICH IS EXPRESSLY PROVIDED BY AVCON, INC., FOR USE BY THE INTENDED RECIPIENT, AND FOR A SPECIFIC PURPOSE. WITHOUT THE EXPRESS WRITTEN CONSENT OF AVCON, INC. ANY DISTRIBUTION, REPRODUCTION, OR OTHER USE OF THIS DOCUMENT, IN WHOLE OR IN PART, IS STRICTLY PROHIBITED

N:\NICEVILLE_PROJECTS\028_DEFUNIAK_AIRPORT\2019.028.01 - TERMINAL DEVELOPMENT\000_CAD\1002801_SITE_GEOMETRY_PLAN.DWG 1/18/2022 9:01 AM

MATCHLINE SEE SHEET C-7

MATCHLINE SEE SHEET C-8

24' AUTOMATIC SLIDING GATE

WHEEL STOPS

PROPERTY LINE

12" RIBBON CURB

DUMPSTER

GENE HURLEY ROAD
(RIGHT OF WAY VARIES)

PROPSED FENCE EXTENDS ANOTHER ±1,050' TO THE EAST

7' TALL AOA FENCE WITH 1' BARBED WIRE ATTACHMENT

FENCE TO BE CONSTRUCTED IF ADDITIVE ALTERNATE 4 IS NOT AWARDED.

5' SIDEWALK

HC PARKING SPOTS WITH HC SIGNS

PROPOSED HANGAR

TRUNCATED DOME

PROPOSED TERMINAL

7' TALL AOA FENCE WITH 1' BARBED WIRE ATTACHMENT

SEE SHEET A-101 AND A-102 FOR CONCRETE DIMENSIONS, PATTERN AND DETAILS FOR ENTRYWAY. ARCHITECTURAL DRAWING SHALL SUPERCEDE CIVIL DRAWINGS.

FENCE POST

106.12'

B-II AIRCRAFT TIE DOWN.

APRON EXPANSION

EXISTING APRON

A-1 AIRCRAFT TIE-DOWN (TYP.)
SEE DETAIL SHEET C-18

A-I AIRCRAFT TIE DOWN, TYP

TAXIWAY A

EXISTING STORMWATER POND
(NO MODIFICATIONS REQUIRED)

North

0 15 30 60

GRAPHIC SCALE IN FEET

LEGEND

- EXISTING CONDITIONS
- EXISTING FENCE LINE
- PROPOSED FENCE LINE
- (1) PROPOSED COORDINATES

RELEASE FOR BID

AVCON

TRANSFORMING TODAYS IDEAS INTO TOMORROW'S REALITY

JOHN R. COLLINS
FL LICENSE NO.: 75419
FBPR CERTIFICATE OF AUTHORIZATION NO. 5057

NO.	DATE	REVISION	BY

SITE GEOMETRY PLAN (SHEET 1 OF 3)

RELEASE FOR BID

AIRPORT TERMINAL AND HANGAR DEVELOPMENT

PREPARED FOR

DEFUNIAK SPRINGS MUNICIPAL AIRPORT

DESIGNED BY:	J.C.
DRAWN BY:	D.F.
CHECKED BY:	T.N.
APPROVED BY:	V.L.
PROJECT NO:	2019.028.01
DATE:	NOVEMBER 2021

SHEET NUMBER
C-6

THIS DOCUMENT CONTAINS PRIVILEGED AND PROPRIETARY INFORMATION, ALL OF WHICH IS EXPRESSLY PROVIDED BY AVCON, INC., FOR USE BY THE INTENDED RECIPIENT, AND FOR A SPECIFIC PURPOSE. WITHOUT THE EXPRESS WRITTEN CONSENT OF AVCON, INC. ANY DISTRIBUTION, REPRODUCTION, OR OTHER USE OF THIS DOCUMENT, IN WHOLE OR IN PART, IS STRICTLY PROHIBITED

N:\NICEVILLE_PROJECTS\028_DEFUNIAK_AIRPORT\2019.028.01 - TERMINAL DEVELOPMENT\000_CADD\1002801_SITE_GEOMETRY_PLAN.DWG 1/18/2022 9:01 AM

BLOCK PLANT

GENE HURLEY ROAD

SEE SHEET C-12 FOR FORCE MAIN CONTINUATION

GENE HURLEY ROAD

2"FM

CONTRACTOR SHALL CUT AND PATCH ASPHALT PAVEMENT WITH 2" ASPHALT ON 8" LIMEROCK BASE. COSTS FOR CUT AND PATCH SHALL BE INCIDENTAL TO PAY ITEM 02730-1, SANITARY SEWER IMPROVEMENTS.

SINGLE STORY METAL HANGAR

SINGLE STORY METAL HANGAR

MATCHLINE SEE SHEET C-6

2" SDR 26 FORCEMAIN, SEE UTILITY PLAN FOR DETAILS

TOFA

TLOFA

TSA

TAXIWAY A CONNECTOR (ADDITIVE ALTERNATE NO. 7)

R60'

TAXIWAY A

North

0 15 30 60

GRAPHIC SCALE IN FEET

LEGEND

- EXISTING CONDITIONS
- EXISTING FENCE LINE
- PROPOSED FENCE LINE
- PARCEL BOUNDARY
- PROPOSED FENCE COORDINATES (1)

RELEASE FOR BID

N:\NICEVILLE_PROJECTS\028_DEFUNIAK_AIRPORT\2019.028.01_-_TERMINAL_DEVELOPMENT\000_CAD\1902801_SITE_GEOMETRY_PLAN.DWG 1/18/2022 9:01 AM

AVCON

TRANSFORMING TODAY'S IDEAS INTO TOMORROW'S REALITY

THIS DOCUMENT CONTAINS PRIVILEGED AND PROPRIETARY INFORMATION, ALL OF WHICH IS EXPRESSLY PROVIDED BY AVCON, INC., FOR USE BY THE INTENDED RECIPIENT, AND FOR A SPECIFIC PURPOSE. WITHOUT THE EXPRESS WRITTEN CONSENT OF AVCON, INC. ANY DISTRIBUTION, REPRODUCTION, OR OTHER USE OF THIS DOCUMENT, IN WHOLE OR IN PART, IS STRICTLY PROHIBITED

JOHN R. COLLINS
FL LICENSE NO.: 75419
FBPR CERTIFICATE OF AUTHORIZATION NO. 5057

NO.	DATE	REVISION	BY

SITE GEOMETRY PLAN (SHEET 2 OF 3)

RELEASE FOR BID

AIRPORT TERMINAL AND HANGAR DEVELOPMENT

PREPARED FOR

DEFUNIAK SPRINGS MUNICIPAL AIRPORT

DESIGNED BY:	J.C.
DRAWN BY:	D.F.
CHECKED BY:	T.N.
APPROVED BY:	V.L.
PROJECT NO:	2019.028.01
DATE:	NOVEMBER 2021

SHEET NUMBER

C-7

POINT TABLE		
POINT #	NORTHING	EASTING
1	634453.60	1448826.06
2	634453.17	1448845.52
3	634547.91	1448968.54
4	634482.09	1449210.11
5	634468.90	1449259.84
6	634434.55	1449424.57
7	634305.43	1450084.92
8	634297.58	1450110.78
9	634312.67	1448562.19
10	634295.39	1448561.84
11	634197.64	1448559.84
12	634291.36	1448741.18
13	634191.35	1448824.97
14	634419.44	1448830.00
15	634421.78	1448723.90
16	634437.11	1448724.28
17	634153.40	1448464.93
18	634165.55	1448283.02
19	634189.11	1448208.49
20	634205.15	1448204.15

POINT TABLE		
POINT #	NORTHING	EASTING
21	634204.82	1448220.84
22	634141.29	1448219.02
23	634143.78	1448098.97
24	634201.98	1448160.30
25	634166.08	1447851.90
26	634170.70	1448037.04
27	634191.12	1448112.48
28	634252.13	1448131.78
29	634278.40	1448144.56
30	634303.07	1448222.95
31	634244.87	1448161.57
32	634536.25	1448695.09
33	634549.25	1448695.36
34	634554.12	1448701.34
35	634551.00	1448711.64
36	634527.04	1448749.26
37	634523.14	1448762.13
38	634522.12	1448808.15
39	634517.01	1448813.04
40	634512.01	1448812.93

POINT TABLE		
POINT #	NORTHING	EASTING
41	634509.98	1448904.90
42	634516.82	1448905.05
43	634524.32	1448908.70
44	634540.72	1448928.65
45	634548.96	1448962.34
46	634561.20	1448905.93
47	634543.91	1448908.91
48	634535.30	1448890.82
49	634536.17	1448851.23
50	634545.52	1448834.74
51	634558.23	1448826.75
52	634571.78	1448802.84
53	634573.04	1448745.51
54	634586.48	1448730.92
55	634596.49	1448741.80
56	634608.10	1448686.88
57	634586.59	1448706.82
58	634578.11	1448702.00
59	634578.33	1448692.00
60	634583.44	1448687.11

POINT TABLE		
POINT #	NORTHING	EASTING
61	634596.44	1448687.40
62	634598.86	1448577.42
63	634585.87	1448577.14
64	634580.98	1448572.03
65	634528.25	1448559.86
66	634556.86	1448577.00
67	634551.75	1448582.07
68	634538.75	1448581.78
69	634548.18	1448784.32
70	634537.65	1448784.09
71	634547.79	1448802.32
72	634537.26	1448802.08
73	634568.18	1448872.87
74	634559.98	1448851.99
75	634548.81	1448856.38
76	634559.29	1448883.05
77	634583.57	1448707.09
78	634203.88	1448581.97
79	634202.75	1448629.95
80	634201.61	1448677.93

POINT TABLE		
POINT #	NORTHING	EASTING
81	634200.47	1448725.92
82	634199.33	1448773.91
83	634396.77	1448793.45
84	634581.11	1448566.03
85	634557.12	1448565.50
86	634671.63	1448563.02
87	634311.75	1448671.36
88	634360.64	1448722.60

North

0 10 30 60

GRAPHIC SCALE IN FEET

LEGEND

- EXISTING CONDITIONS
- EXISTING FENCE LINE
- PROPOSED FENCE LINE
- PARCEL BOUNDARY
- PROPOSED FENCE COORDINATES (1)



RELEASE FOR BID

AVCON

TRANSFORMING TODAY'S IDEAS INTO TOMORROW'S REALITY

JOHN R. COLLINS
FL LICENSE NO.: 75419
FBPR CERTIFICATE OF AUTHORIZATION NO. 5057

NO.	DATE	REVISION	BY

SITE GEOMETRY PLAN (SHEET 3 OF 3)

RELEASE FOR BID

AIRPORT TERMINAL AND HANGAR DEVELOPMENT

PREPARED FOR

DEFUNIAK SPRINGS MUNICIPAL AIRPORT

DESIGNED BY:	J.C.
DRAWN BY:	D.F.
CHECKED BY:	T.N.
APPROVED BY:	V.L.
PROJECT NO:	2019.028.01
DATE:	NOVEMBER 2021

SHEET NUMBER

C-8

THIS DOCUMENT CONTAINS PRIVILEGED AND PROPRIETARY INFORMATION, ALL OF WHICH IS EXPRESSLY PROVIDED BY AVCON, INC., FOR USE BY THE INTENDED RECIPIENT, AND FOR A SPECIFIC PURPOSE. WITHOUT THE EXPRESS WRITTEN CONSENT OF AVCON, INC, ANY DISTRIBUTION, REPRODUCTION, OR OTHER USE OF THIS DOCUMENT, IN WHOLE OR IN PART, IS STRICTLY PROHIBITED

N:\NICEVILLE_PROJECTS\028_DEFUNIAK_AIRPORT\2019.028.01_-_TERMINAL_DEVELOPMENT\000_CAD\100\801_SITE_GEOMETRY_PLAN.DWG, 1/18/2022 9:01 AM

MATCHLINE SEE SHEET C-10

STM-12
RIM: 273.00
INV IN: 267.75(E)

STM-11
RIM: 273.94
INV IN: 267.49(E)
INV OUT: 267.49(W)

STM-10
RIM: 273.35
INV IN: 266.92(SE)
INV OUT: 266.92(W)

STM-09
RIM: 268.97
INV OUT: 266.56(NW)

STM-P-09
164' 24" ABS @ 0.35%

STM-P-08
147' 24" ADS @ 0.35%

GENE HURLEY ROAD
(RIGHT OF WAY VARIES)

GRADING NORTH OF AOA FENCE INCLUDED IN ADDITIVE ALTERNATE NO. 6.

GRADING WEST AND SOUTH OF AOA FENCE INCLUDED IN ADDITIVE ALTERNATE NO. 6.

GRADING SOUTH OF AOA FENCE INCLUDED IN ADDITIVE ALTERNATE NO. 6.

FFE = 279.66'
IF ADDITIVE ALTERNATE NO. 4 IS NOT AWARDED, CONTRACTOR SHALL GRADE UP TO FFE. COSTS TO GRADE BUILDING PAD INCLUDED IN ADDITIVE ALTERNATE NO. 3.

FFE = 279.66'

SEE SHEET A-101 AND A-102 FOR GRADING PLAN FOR ENTRYWAY. ARCHITECTURAL DRAWINGS SHALL SUPERCEDE CIVIL DRAWINGS.

STM-04
RIM: 278.36
INV IN: 276.52(N)
INV IN: 270.74(W)
INV OUT: 270.46(E)

STM-P-03
202' 36" CLASS III RCP @ 0.20%

STM-03
RIM: 276.87
INV IN: 270.05(W)
INV OUT: 270.05(E)
INV OUT: 272.45(S)

STM-P-02
105' 36" CLASS III RCP @ 0.30%

STM-02
RIM: 277.67
INV IN: 269.74(W)
INV OUT: 269.74(E)
INV OUT: 272.44(S)

STM-P-01
107' 42" CLASS III RCP @ 0.18%

STM-01
RIM: 275.09
INV IN: 269.55(W)

15'X15' ENERGY DISSIPATING RIP-RAP

REMOVE EXISTING INLET AND REPLACE STM-04. COST TO REMOVE EXISTING INLET IS INCIDENTAL TO D-759-4.

STM-P-07
85' 18" CLASS III RCP @ 0.53%

STM-P-06
101' 18" CLASS III RCP @ 0.35%

STM-08
RIM: 277.90
INV IN: 272.73(N)

STM-07
RIM: 277.93
INV IN: 272.79(N)

TOFA

TAXIWAY WIDENING GRADING INCLUDED IN ADDITIVE ALTERNATE NO. 7.

North

0 15 30 60

GRAPHIC SCALE IN FEET

LEGEND

- 250 — EXISTING CONTOUR
- 250.0 — PROPOSED CONTOUR
- PROPOSED STORMWATER PIPES
- PROPOSED SANITARY SEWER PIPES
- PROPERTY BOUNDARY

CALL 2 WORKING DAYS BEFORE YOU DIG
IT'S THE LAW! DIAL 811
811 Know what's below. Call before you dig.
SUNSHINE STATE ONE CALL OF FLORIDA, INC.

RELEASE FOR BID

AVCON
TRANSFORMING TODAY'S IDEAS INTO TOMORROW'S REALITY

JOHN R. COLLINS
FL LICENSE NO.: 75419
FBPR CERTIFICATE OF AUTHORIZATION NO. 5057

NO.	DATE	REVISION	BY

GRADING & DRAINAGE PLAN (SHEET 1 OF 2)

RELEASE FOR BID

AIRPORT TERMINAL AND HANGAR DEVELOPMENT

PREPARED FOR
DEFUNIAK SPRINGS MUNICIPAL AIRPORT

DESIGNED BY:	J.C.
DRAWN BY:	D.F.
CHECKED BY:	T.N.
APPROVED BY:	V.L.
PROJECT NO:	2019.028.01
DATE:	NOVEMBER 2021

SHEET NUMBER
C-9

THIS DOCUMENT CONTAINS PRIVILEGED AND PROPRIETARY INFORMATION, ALL OF WHICH IS EXPRESSLY PROVIDED BY AVCON, INC., FOR USE BY THE INTENDED RECIPIENT, AND FOR A SPECIFIC PURPOSE. WITHOUT THE EXPRESS WRITTEN CONSENT OF AVCON, INC. ANY DISTRIBUTION, REPRODUCTION, OR OTHER USE OF THIS DOCUMENT, IN WHOLE OR IN PART, IS STRICTLY PROHIBITED

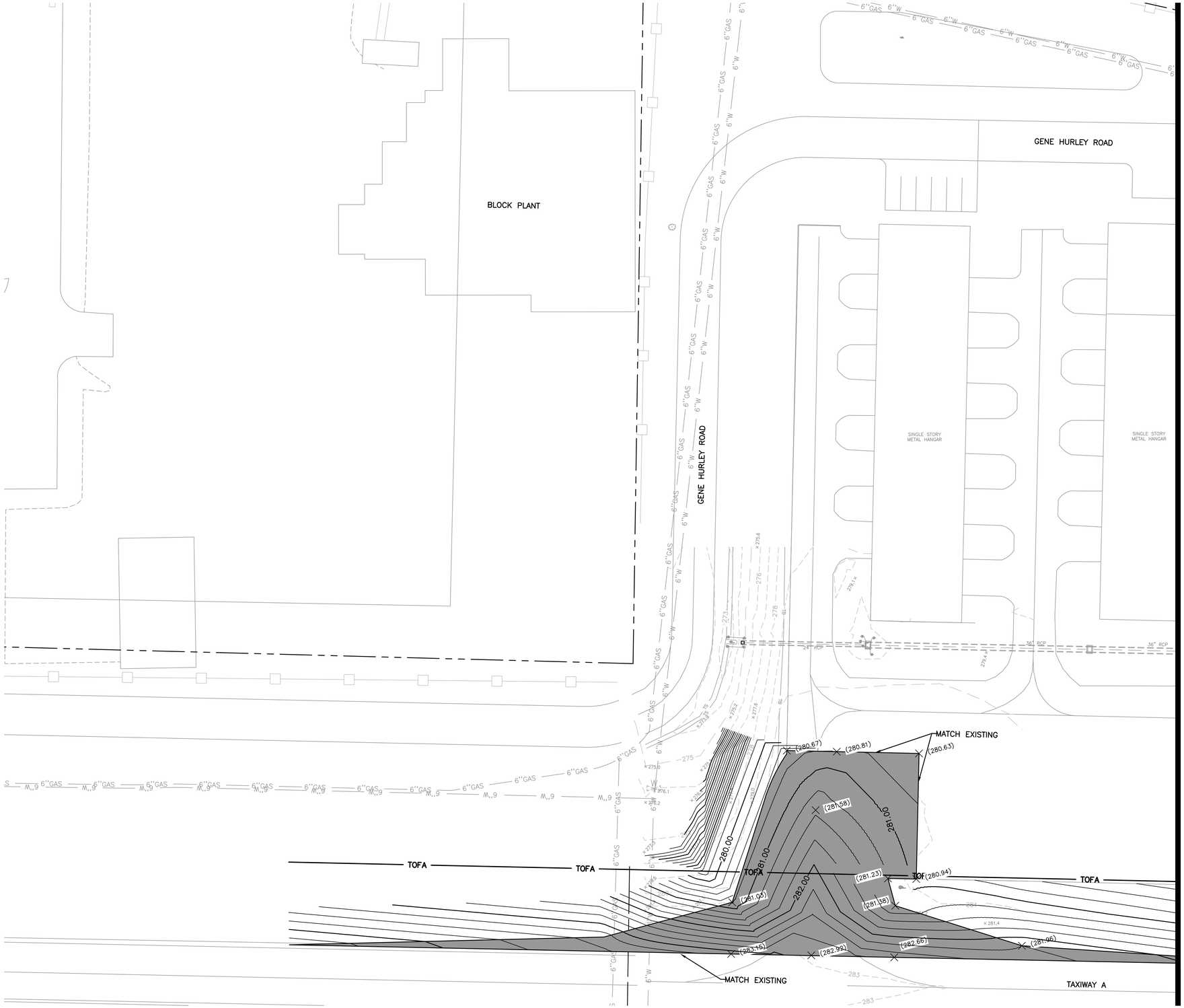

North

0 15 30 60

GRAPHIC SCALE IN FEET

LEGEND

- EXISTING CONTOUR
- PROPOSED CONTOUR
- PROPOSED STORMWATER PIPES
- PROPOSED SANITARY SEWER PIPES
- PROPERTY BOUNDARY

CALL 2 WORKING DAYS BEFORE YOU DIG

IT'S THE LAW! DIAL 811

811 Know what's below. Call before you dig.

SUNSHINE STATE ONE CALL OF FLORIDA, INC.

RELEASE FOR BID

AVCON

TRANSFORMING TODAY'S IDEAS INTO TOMORROW'S REALITY

JOHN R. COLLINS
FL LICENSE NO.: 75419
FBPR CERTIFICATE OF AUTHORIZATION NO. 5057

NO.	DATE	REVISION	BY

GRADING & DRAINAGE PLAN (SHEET 2 OF 2)

RELEASE FOR BID

AIRPORT TERMINAL AND HANGAR DEVELOPMENT

PREPARED FOR

DEFUNIAK SPRINGS MUNICIPAL AIRPORT

DESIGNED BY:	J.C.
DRAWN BY:	D.F.
CHECKED BY:	T.N.
APPROVED BY:	V.L.
PROJECT NO:	2019.028.01
DATE:	NOVEMBER 2021

SHEET NUMBER

C-10

THIS DOCUMENT CONTAINS PRIVILEGED AND PROPRIETARY INFORMATION, ALL OF WHICH IS EXPRESSLY PROVIDED BY AVCON, INC., FOR USE BY THE INTENDED RECIPIENT, AND FOR A SPECIFIC PURPOSE. WITHOUT THE EXPRESS WRITTEN CONSENT OF AVCON, INC. ANY DISTRIBUTION, REPRODUCTION, OR OTHER USE OF THIS DOCUMENT, IN WHOLE OR IN PART, IS STRICTLY PROHIBITED

J:\NICEVILLE_PROJECTS\2019_DEFUNIAK_AIRPORT\2019.028.01 - TERMINAL DEVELOPMENT\000_CADD\100\801_GRADING & DRAINAGE PLAN.DWG 1/18/2022 9:03 AM

STORMWATER STRUCTURE TABLE			
STRUCTURE NAME	STRUCTURE TYPE	DETAILS	NORTHING/EASTING
EX-STM-01	EXISTING STM-01	RIM = 278.49 EX-STM-P-01 INV OUT = 277.21	N: 634471.07 E: 1448423.4193
EX-STM-02	EXISTING STM-02	RIM = 278.24 EX-STM-P-03 INV IN = 271.04 EX-STM-P-02 INV OUT = 271.08	N: 634339.89 E: 1448322.9018
EX-STM-03	EXISTING STM-03	RIM = 278.58 EX-STM-P-04 INV IN = 271.60 EX-STM-P-03 INV OUT = 271.65	N: 634342.48 E: 1448192.4649
EX-STM-04	EXISTING STM-04	RIM = 274.67 EX-STM-P-04 INV OUT = 271.87	N: 634343.90 E: 1448118.6698
STM-01	42" MES	RIM = 275.09 STM-P-01 INV IN = 269.55	N: 634329.56 E: 1448867.7677
STM-02	TYPE G DBI	RIM = 277.67 STM-P-02 INV IN = 269.74 STM-P-01 INV OUT = 269.74 STM-P-06 INV OUT = 272.44	N: 634330.57 E: 1448761.0626
STM-03	TYPE G DBI	RIM = 276.87 STM-P-03 INV IN = 270.05 STM-P-02 INV OUT = 270.05 STM-P-07 INV OUT = 272.45	N: 634337.83 E: 1448656.2056
STM-04	TYPE F TOP TYPE J ALT A (8'-0" DIA) BOTTOM	RIM = 278.36 EX-STM-P-01 INV IN = 276.52 EX-STM-P-02 INV IN = 270.74 STM-P-03 INV OUT = 270.46	N: 634337.18 E: 1448454.6045
STM-07	TYPE F DBI	RIM = 277.93 STM-P-06 INV IN = 272.79	N: 634229.94 E: 1448758.6761
STM-08	TYPE F DBI	RIM = 277.90 STM-P-07 INV IN = 272.73	N: 634252.85 E: 1448654.1901

STORMWATER PIPE TABLE			
NAME	DESCRIPTION	LENGTH	SLOPE
EX-STM-P-01	EXISTING 18" RCP	137.48'	0.50%
EX-STM-P-02	EXISTING 36" RCP	131.73'	0.26%
EX-STM-P-03	EXISTING 36" RCP	130.46'	0.47%
EX-STM-P-04	EXISTING 24" RCP	73.81'	0.37%
STM-P-01	42" CLASS III RCP	106.71'	0.18%
STM-P-02	36" CLASS III RCP	105.11'	0.30%
STM-P-03	36" CLASS III RCP	201.60'	0.20%
STM-P-06	18" CLASS III RCP	100.65'	-0.35%
STM-P-07	18" CLASS III RCP	85.00'	-0.33%

STORMWATER PIPE TABLE			
NAME	DESCRIPTION	LENGTH	SLOPE
STM-P-08	24" ADS	104.56'	-0.35%
STM-P-09	24" ADS	163.56'	-0.35%
STM-P-10	24" ADS	73.00'	-0.35%

STORMWATER STRUCTURE TABLE			
STRUCTURE NAME	STRUCTURE TYPE	DETAILS	NORTHING/EASTING
STM-09	TYPE F DBI (BUBBLE UP)	RIM = 268.97 STM-P-08 INV OUT = 266.56	N: 634492.87 E: 1448993.1228
STM-10	TYPE F DBI	RIM = 273.35 STM-P-08 INV IN = 266.92 STM-P-09 INV OUT = 266.92	N: 634548.24 E: 1448904.4299
STM-11	TYPE F DBI	RIM = 273.94 STM-P-09 INV IN = 267.49 STM-P-10 INV OUT = 267.49	N: 634584.50 E: 1448744.9364
STM-12	TYPE F DBI	RIM = 273.00 STM-P-10 INV IN = 267.75	N: 634603.72 E: 1448674.5103

RELEASE FOR BID

N:\NICEVILLE_PROJECTS\028_DEFUNIAK_AIRPORT\2019.028.01 - TERMINAL DEVELOPMENT\000_CAD\100801_GRADING & DRAINAGE_PLAN.DWG 1/18/2022 9:03 AM

AVCON
TRANSFORMING TODAY'S IDEAS INTO TOMORROW'S REALITY

JOHN R. COLLINS
FL LICENSE NO.: 75419
FBPR CERTIFICATE OF AUTHORIZATION NO. 5057

NO.	DATE	REVISION	BY

STORMWATER PIPE & STRUCTURES TABLES

RELEASE FOR BID

AIRPORT TERMINAL AND HANGAR DEVELOPMENT

PREPARED FOR

DEFUNIAK SPRINGS MUNICIPAL AIRPORT

DESIGNED BY: J.C.
DRAWN BY: D.F.
CHECKED BY: T.N.
APPROVED BY: V.L.
PROJECT NO: 2019.028.01
DATE: NOVEMBER 2021

SHEET NUMBER
C-11

THIS DOCUMENT CONTAINS PRIVILEGED AND PROPRIETARY INFORMATION, ALL OF WHICH IS EXPRESSLY PROVIDED BY AVCON, INC., FOR USE BY THE INTENDED RECIPIENT, AND FOR A SPECIFIC PURPOSE. WITHOUT THE EXPRESS WRITTEN CONSENT OF AVCON, INC. ANY DISTRIBUTION, REPRODUCTION, OR OTHER USE OF THIS DOCUMENT, IN WHOLE OR IN PART, IS STRICTLY PROHIBITED

SANITARY SEWER STRUCTURE TABLE			
NAME	STRUCTURE TYPE	DETAILS	NORTHING/EASTING
CO-01	SANITARY CLEANOUT	RIM = 279.78 SS-P-07 INV IN = 276.26 SS-P-06 INV OUT = 276.16	N: 634501.5525 E: 1448572.0545
CO-02	SANITARY CLEANOUT	RIM = 279.85 SS-P-08 INV IN = 276.33	N: 634501.6061 E: 1448590.7998
CO-03	SANITARY CLEANOUT	RIM = 277.71 SS-P-05 INV IN = 275.77 SS-P-04 INV OUT = 273.71	N: 634466.9689 E: 1448856.8397
LS-01	SANITARY GRINDER PUMP SEE PUMP DETAILS	RIM = 276.67 SS-P-01 INV IN = 271.19	N: 634610.9605 E: 1448534.8379
MH-01	SANITARY MANHOLE	RIM = 276.83 SS-P-02 INV IN = 271.35 SS-P-01 INV OUT = 271.25	N: 634610.5622 E: 1448546.0900
MH-02	SANITARY MANHOLE	RIM = 279.29 SS-P-03 INV IN = 271.79 SS-P-06 INV IN = 275.94 SS-P-02 INV OUT = 271.69	N: 634545.5092 E: 1448566.9741
MH-03	SANITARY MANHOLE	RIM = 278.83 SS-P-04 INV IN = 273.34 SS-P-03 INV OUT = 273.24	N: 634539.9829 E: 1448858.4210

SANITARTY PIPE TABLE			
Pipe Name	DESCRIPTION	Length	Slope
SS-P-01	8" SDR 35	7'	0.50%
SS-P-02	8" SDR 35	64'	0.50%
SS-P-03	8" SDR 35	288'	0.50%
SS-P-04	8" SDR 35	69'	0.50%
SS-P-05	4" SDR 35	27'	0.50%
SS-P-06	6" SDR 35	40'	0.50%
SS-P-07	6" SDR 35	6'	0.50%
SS-P-08	6" SDR 35	4'	0.50%

North

0 10 20 40

GRAPHIC SCALE IN FEET

LEGEND

- 6"W — EXISTING WATER MAIN
- W — PROPOSED WATER LINE
- GATE VALVE
- FIRE HYDRANT
- WATER SERVICE CONNECTION
- PROPOSED STORMWATER PIPES
- PROPERTY BOUNDARY

U.S. HWY. 90

SEE SHEET C-5 FOR FORCE MAIN CONTINUATION.

SS-P-01

MH-01

8" PVC SANITARY LINE AT 0.5% SLOPE.

2"FM

LS-01

FIRE HYDRANT ASSEMBLY & 6" GATE VALVE BOX

(1) 6" TEE

6" TEE

6" CAP W/6" GATE VALVE AND BOX

6" C-900 WATER LINE

SS-P-02

MH-02

SS-P-06

COST FOR HANGAR OILY WASTE SYSTEM TO BE INCLUDED IN ADDITIVE ALTERNATE NO. 4.

OIL WATER SEPARATOR

HANGAR

CO-01

SS-P-07

SS-P-08

CO-02

FIRE HYDRANT ASSEMBLY & 6" GATE VALVE BOX

6" TAPPING SADDLE W/2" CORP STOP, 2" POTABLE WATER LINE

6" DOUBLE DETECTOR CHECK BACKFLOW PREVENTION ASSEMBLY WITH FDC CONNECTION SEE DETAIL SHEET C-14

6" WET TAP CONTRACTOR SHALL COORDINATE 48 HOURS PRIOR TO TAPPING EXISTING LINE

(1) 6" 11.25° BEND

(1) 6" GATE VALVE AND BOX

6" TEE W/6" GATE VALVE AND BOX

2" WATER METER

2" DOUBLE DETECTOR CHECK BACKFLOW PREVENTION ASSEMBLY SEE DETAIL SHEET C-14

6" C-900 WATER LINE

8" PVC SANITARY LINE AT 0.5% SLOPE.

SS-P-03

SEE WATER/SEWER CROSSING DETAIL ON SHEET C-13, TYP.

2" WATER LINE

EXISTING 6" WATER MAIN

GENE HURLEY ROAD (RIGHT OF WAY VARIES)

MH-03

8" PVC SANITARY LINE AT 0.5% SLOPE.

6" PVC SANITARY LINE AT 0.5% SLOPE.

AIRPORT TERMINAL

SS-P-05

SS-P-04

SEE PLUMBING DRAWINGS FOR CONTINUATION

CO-03

RUNWAY PROTECTION ZONE

EXISTING STORMWATER POND

RELEASE FOR BID

AVCON

TRANSFORMING TODAY'S IDEAS INTO TOMORROW'S REALITY

JOHN R. COLLINS
FL LICENSE NO.: 75419
FBPR CERTIFICATE OF AUTHORIZATION NO. 5057

NO.	DATE	REVISION	BY

UTILITY PLAN

RELEASE FOR BID

AIRPORT TERMINAL AND HANGAR DEVELOPMENT

PREPARED FOR

DEFUNIAK SPRINGS MUNICIPAL AIRPORT

DESIGNED BY:	J.C.
DRAWN BY:	D.F.
CHECKED BY:	T.N.
APPROVED BY:	V.L.
PROJECT NO:	2019.028.01
DATE:	NOVEMBER 2021

SHEET NUMBER
C-12

THIS DOCUMENT CONTAINS PRIVILEGED AND PROPRIETARY INFORMATION, ALL OF WHICH IS EXPRESSLY PROVIDED BY AVCON, INC. FOR USE BY THE INTENDED RECIPIENT, AND FOR A SPECIFIC PURPOSE. WITHOUT THE EXPRESS WRITTEN CONSENT OF AVCON, INC. ANY DISTRIBUTION, REPRODUCTION, OR OTHER USE OF THIS DOCUMENT, IN WHOLE OR IN PART, IS STRICTLY PROHIBITED

N:\NICEVILLE_PROJECTS\028_DEFUNIAK_AIRPORT\2019.028.01_TERMINAL_DEVELOPMENT\000_CAD\100801_UTILITY_PLAN.DWG 1/18/2022 8:04 AM

N:\NICEVILLE-PROJECTS\028-DEFUNIAK AIRPORT\2019.0028.01 - TERMINAL DEVELOPMENT\000 CAD\1902801_UTILITY PLAN.DWG 1/18/2022 9:04 AM

GENERAL NOTES

1. ALL GRADES ARE FINISHED GRADES.
2. ALL STATIONING AND OFFSETS ARE FROM, AND PERPENDICULAR OR RADIAL TO THE THE BASELINE OF SURVEY UNLESS OTHERWISE NOTED.
3. FOR STABILIZING AT INTERSECTIONS, TURNOUTS AND GRADED CONNECTIONS, SEE FDOT INDEX NO. 515.
4. ALL GRASSED AREAS DISTURBED AS A RESULT OF CONSTRUCTION SHALL BE RESODDED "IN KIND' UNLESS OTHERWISE NOTED IN THE PLANS.
5. UNSUITABLE MATERIALS SHALL BE REMOVED FROM THE CONSTRUCTION AREAS AND BACKFILLED WITH SUITABLE MATERIALS.
6. CONSTRUCTION SHALL INCLUDE REPLACING, WITH MATCHING MATERIALS: ANY DRIVEWAYS, WALKS, CURBS, SOD, STRIPING ETC. THAT ARE DAMAGED OR REMOVED DUE TO CONSTRUCTION. THIS WORK SHALL BE COORDINATED WITH THE PROPERTY OWNERS. PAYMENT FOR THIS WORK SHALL BE INCIDENTAL TO THE OTHER CONTRACT ITEMS.
7. ALL PERSONAL PROPERTY WITHIN THE RIGHT-OF-WAY SHALL BE RELOCATED BY THE PROPERTY OWNER. THE CONTRACTOR SHALL COORDINATE WITH THE PROPERTY OWNERS TO PROVIDE NOTIFICATION AND A REASONABLE TIME FRAME TO RELOCATE ITEMS. THE CONTRACTOR SHALL NOTIFY THE PROJECT ENGINEER PRIOR TO REMOVING THE ITEMS NECESSARY TO CONSTRUCT THE PROJECT IN ACCORDANCE WITH THE PLANS UNLESS OTHERWISE STATED IN THE PLANS.
8. ALL PUBLIC AND PRIVATE PROPERTY AFFECTED BY THE CONSTRUCTION WORK SHALL BE RESTORED TO A CONDITION EQUAL TO OR BETTER THAN THE PRE-CONSTRUCTION CONDITION.
9. ALL EXISTING DRAINAGE STRUCTURES WITHIN THE LIMITS OF CONSTRUCTION SHALL REMAIN **IN** PLACE UNLESS OTHERWISE NOTED.
10. ALL EXISTING UTILITIES ARE TO REMAIN IN PLACE UNLESS OTHERWISE NOTED.
11. SPECIAL ATTENTION IS DIRECTED TO THE FACT THAT PORTIONS OF SOME DRAINAGE STRUCTURES MAY EXTEND INTO THE STABILIZED PORTION OF THE ROADWAY AND EXTREME CAUTION WILL BE NECESSARY **IN** STABILIZATION OPERATIONS AT THESE LOCATIONS. ALL STORM SEWER LINES AND INLETS SHALL BE CLEANED OF DEBRIS AND ERODED MATERIALS AT THE LAST STAGE OF CONSTRUCTION.
12. ANY DRAINAGE PROBLEMS EXISTING BEFORE CONSTRUCTION COMMENCES SHALL BE BROUGHT TO THE ATTENTION OF THE NWFWMD AND ENGINEER OF RECORD PRIOR TO BEGINNING OF CONSTRUCTION.
13. TEMPORARY DRAINAGE SHALL BE PROVIDED DURING CONSTRUCTION TO PREVENT ANY FLOODING OF PRIVATE PROPERTY.
14. THE EROSION CONTROL MEASURES PER FDOT EROSION AND SEDIMENT CONTROL MANUAL AND SPECIFICATION 104 ARE THE MINIMUM REQUIRED. ADDITIONAL EROSION CONTROL MEASURES MAY BE REQUIRED DUE TO FIELD CONDITIONS AS DETERMINED BY THE NWFWMD'S AUTHORIZED REPRESENTATIVE AND THE REGULATORY AGENCIES.
15. BENCHMARK DATUM IS N.A.V.D. 1988 (NAVD 88). ANY MONUMENT WITHIN THE LIMITS OF CONSTRUCTION IS TO BE PROTECTED. IF IN DANGER OF DAMAGE, THE CONSTRUCTION MANAGER SHALL NOTIFY THE FLORIDA DEPARTMENT OF ENVIRONMENTAL PROTECTION (FDEP), BUREAU OF SURVEY AND MAPPING, 3900 COMMONWEALTH BOULEVARD, M.S. 100, TALLAHASSEE, FLORIDA 32399. TELEPHONE (850) 245-2555.
16. ANY PUBLIC LAND CORNER, GPS, CITY, COUNTY OR STATE MONUMENT WITHIN THE LIMITS OF CONSTRUCTION IS TO BE PROTECTED. IF A CORNER OR MONUMENT IS IN DANGER OF BEING DESTROYED AND HAS NOT BEEN PROPERLY REFERENCED, THE CONTRACTOR'S CONSTRUCTION MANAGER SHALL NOTIFY THE PROJECT ENGINEER WITHOUT DELAY BY TELEPHONE.
17. ALL SURVEY CORNERS INDICATED ON THE PLANS SHALL BE REFERENCED AND CERTIFIED BY A REGISTERED PROFESSIONAL LAND SURVEYOR PRIOR TO COMMENCEMENT OF CONSTRUCTION. ALL CORNERS DESTROYED OR OBLITERATED BY CONSTRUCTION SHALL BE RESET AND SO CERTIFIED BY THE LAND SURVEYOR PRIOR TO COMPLETION OF THE PROJECT.
18. UPON COMPLETION OF THE CONSTRUCTION, THE FDEP AND THE PROJECT ENGINEER SHALL BE NOTIFIED FOR FINAL INSPECTION.
19. CONTRACTOR SHALL BE RESPONSIBLE FOR LITTER REMOVAL (TRASH, TREE LIMBS, BRUSH PILES, AND OTHER MAN MADE DEBRIS) ALONG ENTIRE PROJECT, TO PROVIDE A LITTER FREE CORRIDOR AT COMPLETION OF CONSTRUCTION.
20. THE LOCATION OF THE EXISTING UTILITIES SHOWN IN THE PLANS ARE APPROXIMATE ONLY. PRIOR TO CONSTRUCTION, ALL EXISTING UTILITIES, PUBLIC OR PRIVATE, SHALL BE LOCATED IN THE AREA OF CONSTRUCTION AND OWNERS OF SAID UTILITIES NOTIFIED PRIOR TO COMMENCING WORK. THE EXACT LOCATION SHALL BE DETERMINED BY THE CONTRACTOR PRIOR TO CONSTRUCTION.
21. THE CONTRACTOR IS TO CONTACT (811) THE SUNSHINE STATE ONE CALL OF FLORIDA, INC. CENTER (1-800-432-4770), WWW.CALLSUNSHINE.COM AT LEAST TWO (2) BUSINESS DAYS (48 HOURS) PRIOR TO THE START OF CONSTRUCTION (PER CHAPTER 556 OF THE FLORIDA STATUTES).
22. ALL GRADES AND CROSS SLOPES SHALL COMPLY WITH THE LATEST AMERICANS WITH DISABILITIES ACT (A.DA) STANDARDS FOR ACCESSIBLE DESIGN. THE CONTRACTOR SHALL NOTIFY THE ENGINEER OF RECORD IMMEDIATELY IN THE CASE THAT A.DA REQUIREMENTS MAY NOT BE MET AS DESIGNED, SO THAT CORRECTIVE ACTION MAY BE PROVIDED PRIOR TO CONSTRUCTION. THE CONTRACTOR SHALL ENSURE SUFFICIENT CROSS SLOPE TO PROVIDE ADEQUATE DRAINAGE OF THE PROPOSED FACILITIES.
23. IN ADDITION TO THE TURBIDITY AND EROSION CONTROL MEASURES SPECIFIED ON THE PLANS, BEST MANAGEMENT PRACTICES FOR EROSION AND TURBIDITY CONTROL SHALL BE UTILIZED AT ALL TIMES DURING CONSTRUCTION. THE CONTRACTOR SHALL BE RESPONSIBLE FOR COMPLIANCE WITH ALL LOCAL, STATE AND FEDERAL REGULATIONS, INCLUDING REGULATIONS OF THE NORTHWEST FLORIDA WATER MANAGEMENT DISTRICT (NWFWMD),

   U.S. ARMY CORPS OF ENGINEERS (USACOE), FLORIDA DEPARTMENT OF ENVIRONMENTAL PROTECTION (FDEP) AND THE NPDES PERMIT REQUIREMENT.S THESE PRACTICES SHALL INCLUDE THE USE AND MAINTENANCE OF STAKED SILT FENCE FILTER CLOTH AND OTHER SUITABLE MEANS SURROUNDING ALL CONSTRUCTION AREAS TO PREVENT EROSION AND SEDIMENTATION, AS WELL AS THE USE OF FLOATING AND/OR STAKED TURBIDITY BARRIERS WHERE APPROPRIATE TO ISOLATE CONSTRUCTION AREAS FROM ADJACENT SURFACE WATERS. THESE TURBIDITY CONTROL DEVICES SHALL BE INSPECTED AND MAINTAINED ON A DAILY BASIS TO ENSURE THAT CONSTRUCTION GENERATED TURBIDITY IS CONTAINED WITHIN THE WORK AREAS AND THAT THE TURBIDITY CONTROL DEVICES REMAIN IN PLACE UNTIL ALL CONSTRUCTION IS COMPLETE, AND WORK AREAS HAVE BEEN STABILIZED.

24. LOCATION OF SILT FENCE AND STAKED OR FLOATING TURBIDITY BARRIERS (IF) SHOWN ON CONSTRUCTION PLANS ARE FOR GRAPHIC PURPOSES IDENTIFYING THAT EROSION CONTROL FEATURES WILL BE PRESENT. LOCATIONS OF SILT FENCE ARE APPROXIMATE AND ARE TO BE ADJUSTED AS NECESSARY TO MEET FIELD CONDITIONS AS DIRECTED BY THE PROJECT ENGINEER.
25. THE CONTRACTOR SHALL REVIEW ALL PERMITS, PERMIT EXEMPTIONS, AND REPORT LOGS LOCATED IN THE CONTRACT DOCUMENTS PRIOR TO BIDDING ON THE PROJECT AND BECOME FAMILIAR WITH ALL OF THE CONDITIONS OF THESE DOCUMENTS. THE CONTRACTOR SHALL VERIFY THAT THE CONSTRUCTION ACTIVITIES ARE IN COMPLIANCE WITH THESE PERMITS.
26. THE CONTRACTOR IS RESPONSIBLE FOR THE PROTECTION OF THE PAVEMENT SURFACE. ALL DEFICIENCIES WILL BE REPAIRED AT THE CONTRACTOR'S EXPENSE. NO EDGE PATCHES, POTHOLE AND GOUGE PATCHES OR PARTIAL SURFACE WIDTH PATCHES SHALL BE PERMITTED IN THE FINISHED ASPHALT OR CONCRETE SURFACE OF THE PAVEMENT AND ITS AMENITIES. ALL PATCHING OF THE FINISHED SURFACE SHALL BE FULL WIDTH OF THE SURFACE BEING REPAIRED AND EXTEND AT A MINIMUM ONE (1') FOOT IN LENGTH BEYOND THE IRREGULARITY EDGES. ASPHALT PAVEMENT PATCHING SHALL RECEIVE THERMOPLASTIC STRIPING. THE COST FOR ALL WORK AND MATERIALS NECESSARY TO REPAIR THE PAVEMENT SURFACE TO ITS REQUIRED SURFACE PROFILE SHALL BE INCIDENTAL TO THE OTHER CONTRACT PAY ITEM BID COSTS WITH NO ADDITIONAL CHARGE TO THE CITY.
27. ALL STAKING OF PROPOSED CONSTRUCTION TO ALLOW FOR PROPER INSTALLATION/RELOCATION OF UTILITY FEATURES, AS MAY BE INDICATED WITHIN THESE PLANS, SHALL BE PERFORMED BY THE CONTRACTOR. THE CONTRACTOR SHALL COORDINATE WITH THE OWNER OF THE IMPACTED UTILITY AND STAKE THE ITEMS REQUESTED. THIS STAKING SHALL BE SEPARATE AND IN ADDITION TO THE NORMAL STAKING FOR THE PROJECT. THE COST OF THIS STAKING SHALL BE INCIDENTAL TO AND INCLUDED IN THE COST OF THE PROJECT.
28. EXISTING IRRIGATION LINES/SYSTEMSIN CONFLICT WITH PROPOSED IMPROVEMENTS SHALL BE ADJUSTED AS NECESSARY TO RELOCATE OUTSIDE OF THE PROPOSED CONSTRUCTION AREA, COST OF WHICH SHALL BE INCIDENTAL TO THE PAYMENT OF ASSOCIATED CONSTRUCTION.

EB# 0006155

PREBLE RISH, INC
CONSULTING ENGINEERS AND SURVEYORS
CIVIL SURVEYING SITE PLANNING
324 MARINA DRIVE PORT ST. JOE, FL32456 (850)227-7200 | 203 ABERDEEN PARKWAY PANAMA CITY, FL 32405 (850) 522-0644 | 877 COUNTY ROAD 393 SANTA ROSA BEACH, FL 32459 (850)267-0759

GENERAL NOTES
Water Distribution and Wastewater Collection System Standards
City of Freeport
Walton County
Florida

DATE: 11/14 | SCALE: N/A | DRAWN: SOE | CHECKED: CLK | PROJECT NO. 493.000 | SHEET GN-1

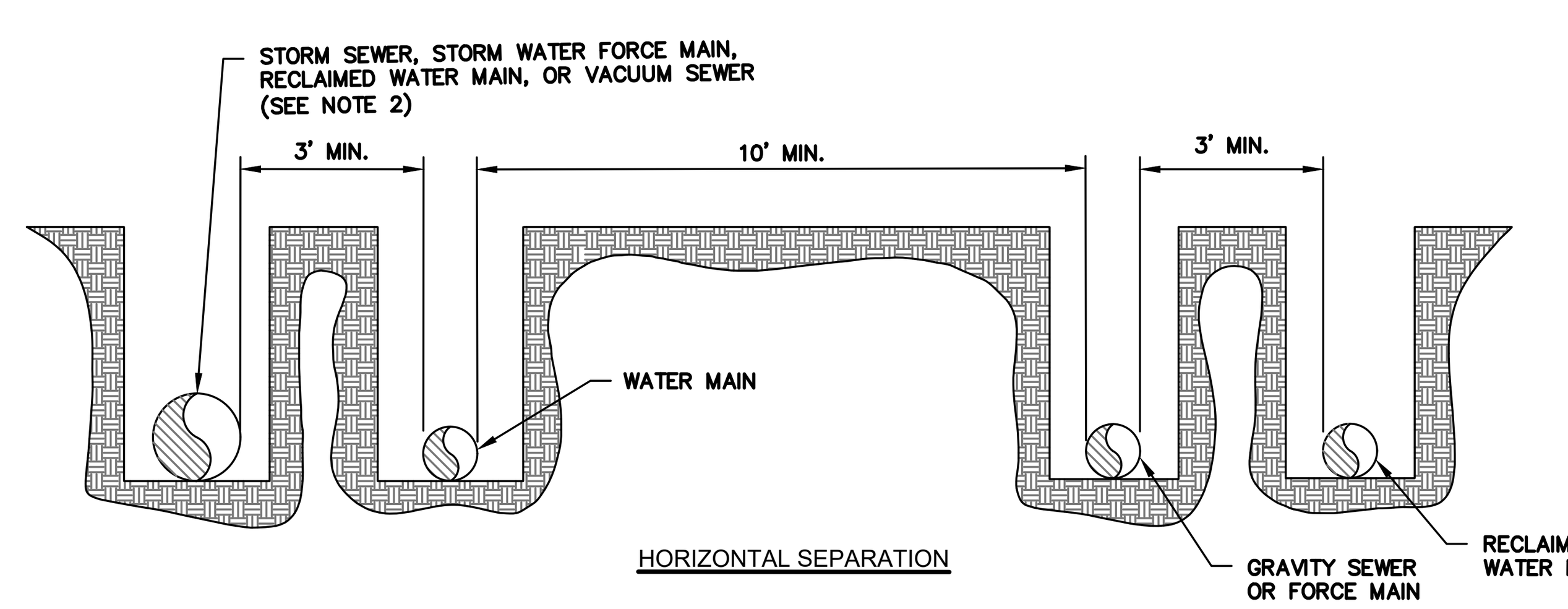

HORIZONTAL SEPARATION

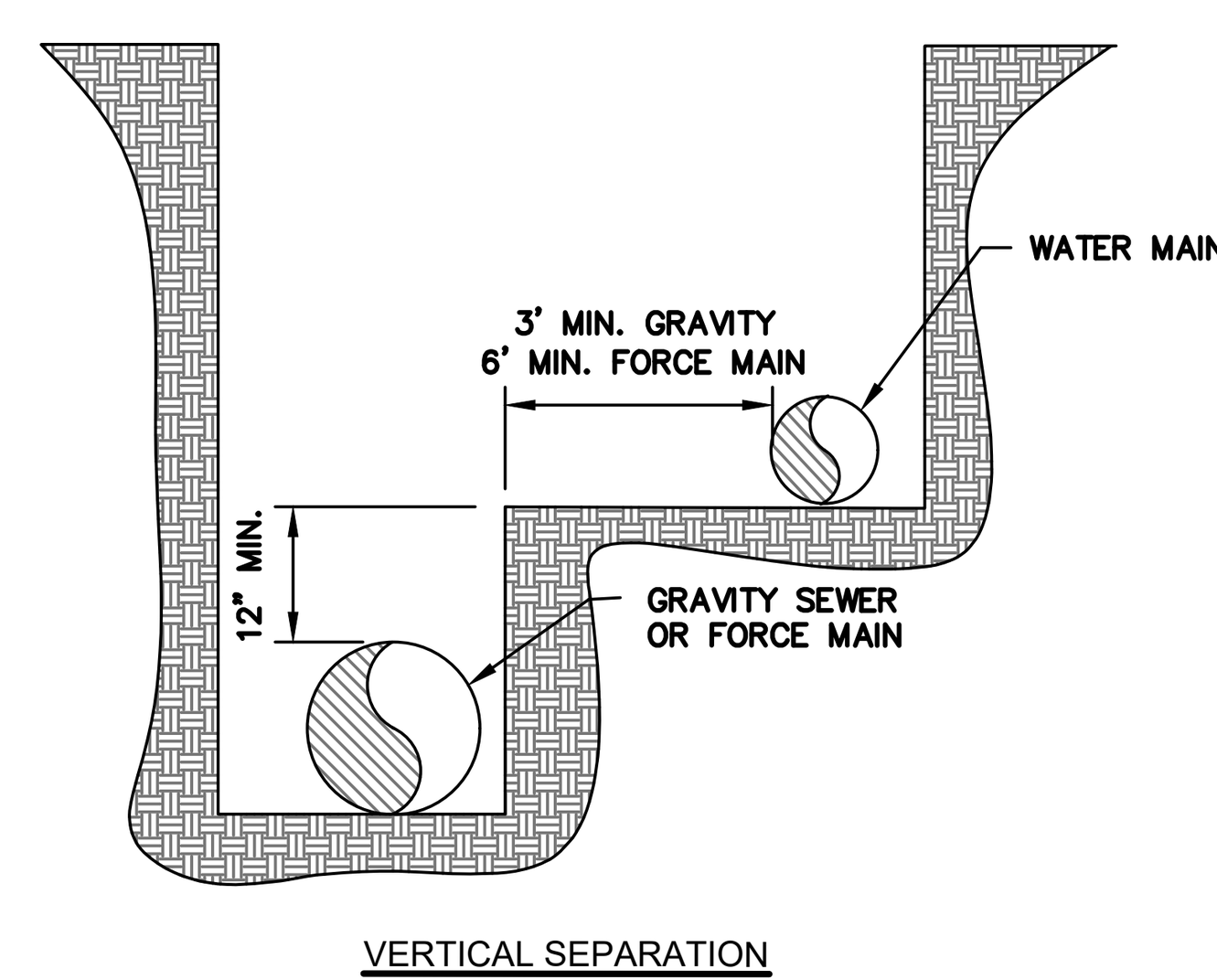

VERTICAL SEPARATION

DETAIL-WATER/SEWER SEPARATION
SCALE: N.T.S.

HORIZONTAL SEPARATION NOTES:
(1) HORIZONTAL SEPARATION BETWEEN UNDERGROUND WATER MAINS AND SANITARY OR STORM SEWERS, WASTEWATER OR STORMWATER FORCE MAINS, RECLAIMED WATER PIPELINES, AND ON-SITE SEWAGE TREATMENT AND DISPOSAL SYSTEMS.

(a) NEW OR RELOCATED, UNDERGROUND WATER MAINS SHALL BE LAID TO PROVIDE A HORIZONTAL DISTANCE OF AT LEAST THREE FEET BETWEEN THE OUTSIDE OF THE WATER MAIN AND THE OUTSIDE OF ANY EXISTING OR PROPOSED STORM SEWER, STORMWATER FORCE MAIN, OR PIPELINE CONVEYING RECLAIMED WATER REGULATED UNDER PART III OF CHAPTER 62-610, F.A.C.
(b) NEW OR RELOCATED, UNDERGROUND WATER MAINS SHALL BE LAID TO PROVIDE A HORIZONTAL DISTANCE OF AT LEAST THREE FEET, AND PREFERABLY TEN FEET, BETWEEN THE OUTSIDE OF THE WATER MAIN AND THE OUTSIDE OF ANY EXISTING OR PROPOSED VACUUM-TYPE SANITARY SEWER.
(c) NEW OR RELOCATED, UNDERGROUND WATER MAINS SHALL BE LAID TO PROVIDE A HORIZONTAL DISTANCE OF AT LEAST SIX FEET, AND PREFERABLY TEN FEET, BETWEEN THE OUTSIDE OF THE WATER MAIN AND THE OUTSIDE OF ANY EXISTING OR PROPOSED GRAVITY- OR PRESSURE-TYPE SANITARY SEWER, WASTEWATER FORCE MAIN, OR PIPELINE CONVEYING RECLAIMED WATER NOT REGULATED UNDER PART III OF CHAPTER 62-610, F.A.C. THE MINIMUM HORIZONTAL SEPARATION DISTANCE BETWEEN WATER MAINS AND GRAVITY-TYPE SANITARY SEWERS SHALL BE REDUCED TO THREE FEET WHERE THE BOTTOM OF THE WATER MAIN IS LAID AT LEAST SIX INCHES ABOVE THE TOP OF THE SEWER.
(d) NEW OR RELOCATED, UNDERGROUND WATER MAINS SHALL BE LAID TO PROVIDE A HORIZONTAL DISTANCE OF AT LEAST TEN FEET BETWEEN THE OUTSIDE OF THE WATER MAIN AND ALL PARTS OF ANY EXISTING OR PROPOSED "ON-SITE SEWAGE TREATMENT AND DISPOSAL SYSTEM" AS DEFINED IN SECTION 381.0065(2), F.S., AND RULE 64E-6.002, F.A.C.

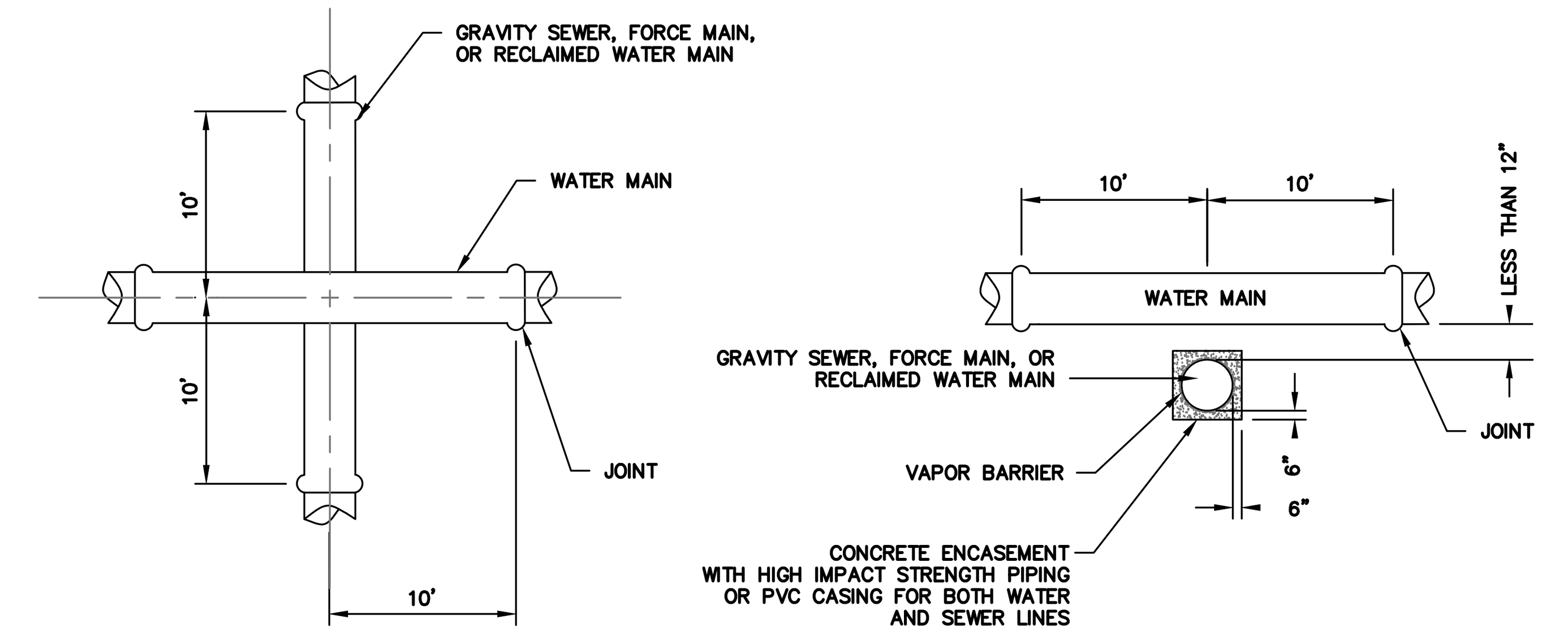

DETAIL-WATER/SEWER CROSSING
SCALE: N.T.S.

VERTICAL SEPARATION NOTES:
1. VERTICAL SEPARATION BETWEEN UNDERGROUND WATER MAINS AND SANITARY OR STORM SEWERS, WASTEWATER OR STORMWATER FORCE MAINS, AND RECLAIMED WATER PIPELINES:

(a) NEW OR RELOCATED, UNDERGROUND WATER MAINS CROSSING ANY EXISTING OR PROPOSED GRAVITY- OR VACUUM-TYPE SANITARY SEWER OR STORM SEWER SHALL BE LAID SO THE OUTSIDE OF THE WATER MAIN IS AT LEAST SIX INCHES, AND PREFERABLY 12 INCHES, ABOVE OR AT LEAST 12 INCHES BELOW THE OUTSIDE OF THE OTHER PIPELINE. HOWEVER, IT IS PREFERABLE TO LAY THE WATER MAIN ABOVE THE OTHER PIPELINE.
(b) NEW OR RELOCATED, UNDERGROUND WATER MAINS CROSSING ANY EXISTING OR PROPOSED PRESSURE-TYPE SANITARY SEWER, WASTEWATER OR STORMWATER FORCE MAIN, OR PIPELINE CONVEYING RECLAIMED WATER SHALL BE LAID SO THE OUTSIDE OF THE WATER MAIN IS AT LEAST 12 INCHES ABOVE OR BELOW THE OUTSIDE OF THE OTHER PIPELINE. HOWEVER, IT IS PREFERABLE TO LAY THE WATER MAIN ABOVE THE OTHER PIPELINE.
(c) AT THE UTILITY CROSSINGS DESCRIBED IN PARAGRAPHS (A) AND (B) ABOVE, ONE FULL LENGTH OF WATER MAIN PIPE SHALL BE CENTERED ABOVE OR BELOW THE OTHER PIPELINE SO THE WATER MAIN JOINTS WILL BE AS FAR AS POSSIBLE FROM THE OTHER PIPELINE. ALTERNATIVELY, AT SUCH CROSSINGS, THE PIPES SHALL BE ARRANGED SO THAT ALL WATER MAIN JOINTS ARE AT LEAST THREE FEET FROM ALL JOINTS IN VACUUM-TYPE SANITARY SEWERS, STORM SEWERS, STORMWATER FORCE MAINS, OR PIPELINES CONVEYING RECLAIMED WATER REGULATED UNDER PART III OF CHAPTER 62-610, F.A.C., AND AT LEAST SIX FEET FROM ALL JOINTS IN GRAVITY- OR PRESSURE-TYPE SANITARY SEWERS, WASTEWATER FORCE MAINS, OR PIPELINES CONVEYING RECLAIMED WATER NOT REGULATED UNDER PART III OF CHAPTER 62-610, F.A.C.

SEPARATION EXCEPTION NOTES:
WHERE IT IS NOT TECHNICALLY FEASIBLE OR ECONOMICALLY SENSIBLE TO COMPLY WITH THE REQUIREMENTS IN SUBSECTION (1) OR (2) ABOVE, THE DEPARTMENT SHALL ALLOW EXCEPTIONS TO THESE REQUIREMENTS IF SUPPLIERS OF WATER OR CONSTRUCTION PERMIT APPLICANTS PROVIDE TECHNICAL OR ECONOMIC JUSTIFICATION FOR EACH EXCEPTION AND PROVIDE ALTERNATIVE CONSTRUCTION FEATURES THAT AFFORD A SIMILAR LEVEL OF RELIABILITY AND PUBLIC HEALTH PROTECTION. ACCEPTABLE ALTERNATIVE CONSTRUCTION FEATURES INCLUDE THE FOLLOWING:

(a) WHERE AN UNDERGROUND WATER MAIN IS BEING LAID LESS THAN THE REQUIRED MINIMUM HORIZONTAL DISTANCE FROM ANOTHER PIPELINE AND WHERE AN UNDERGROUND WATER MAIN IS CROSSING ANOTHER PIPELINE AND JOINTS IN THE WATER MAIN ARE BEING LOCATED LESS THAN THE REQUIRED MINIMUM DISTANCE FROM JOINTS IN THE OTHER PIPELINE:
1. USE OF PRESSURE-RATED PIPE CONFORMING TO THE AMERICAN WATER WORKS ASSOCIATION STANDARDS INCORPORATED INTO RULE 62-555.330, F.A.C., FOR THE OTHER PIPELINE IF IT IS A GRAVITY- OR VACUUM-TYPE PIPELINE;
2. USE OF WELDED, FUSED, OR OTHERWISE RESTRAINED JOINTS FOR EITHER THE WATER MAIN OR THE OTHER PIPELINE; OR
3. USE OF WATERTIGHT CASING PIPE OR CONCRETE ENCASEMENT AT LEAST FOUR INCHES THICK FOR EITHER THE WATER MAIN OR THE OTHER PIPELINE.

(a) WHERE AN UNDERGROUND WATER MAIN IS BEING LAID LESS THAN THREE FEET HORIZONTALLY FROM ANOTHER PIPELINE AND WHERE AN UNDERGROUND WATER MAIN IS CROSSING ANOTHER PIPELINE AND IS BEING LAID LESS THAN THE REQUIRED MINIMUM VERTICAL DISTANCE FROM THE OTHER PIPELINE:
1. USE OF PIPE, OR CASING PIPE, HAVING HIGH IMPACT STRENGTH (I.E., HAVING AN IMPACT STRENGTH AT LEAST EQUAL TO THAT OF 0.25-INCH-THICK DUCTILE IRON PIPE) OR CONCRETE ENCASEMENT AT LEAST FOUR INCHES THICK FOR THE WATER MAIN; AND
2. USE OF PIPE, OR CASING PIPE, HAVING HIGH IMPACT STRENGTH (I.E., HAVING AN IMPACT STRENGTH AT LEAST EQUAL TO THAT OF 0.25-INCH-THICK DUCTILE IRON PIPE) OR CONCRETE ENCASEMENT AT LEAST FOUR INCHES THICK FOR THE OTHER PIPELINE IF IT IS NEW AND IS CONVEYING WASTEWATER OR RECLAIMED WATER.

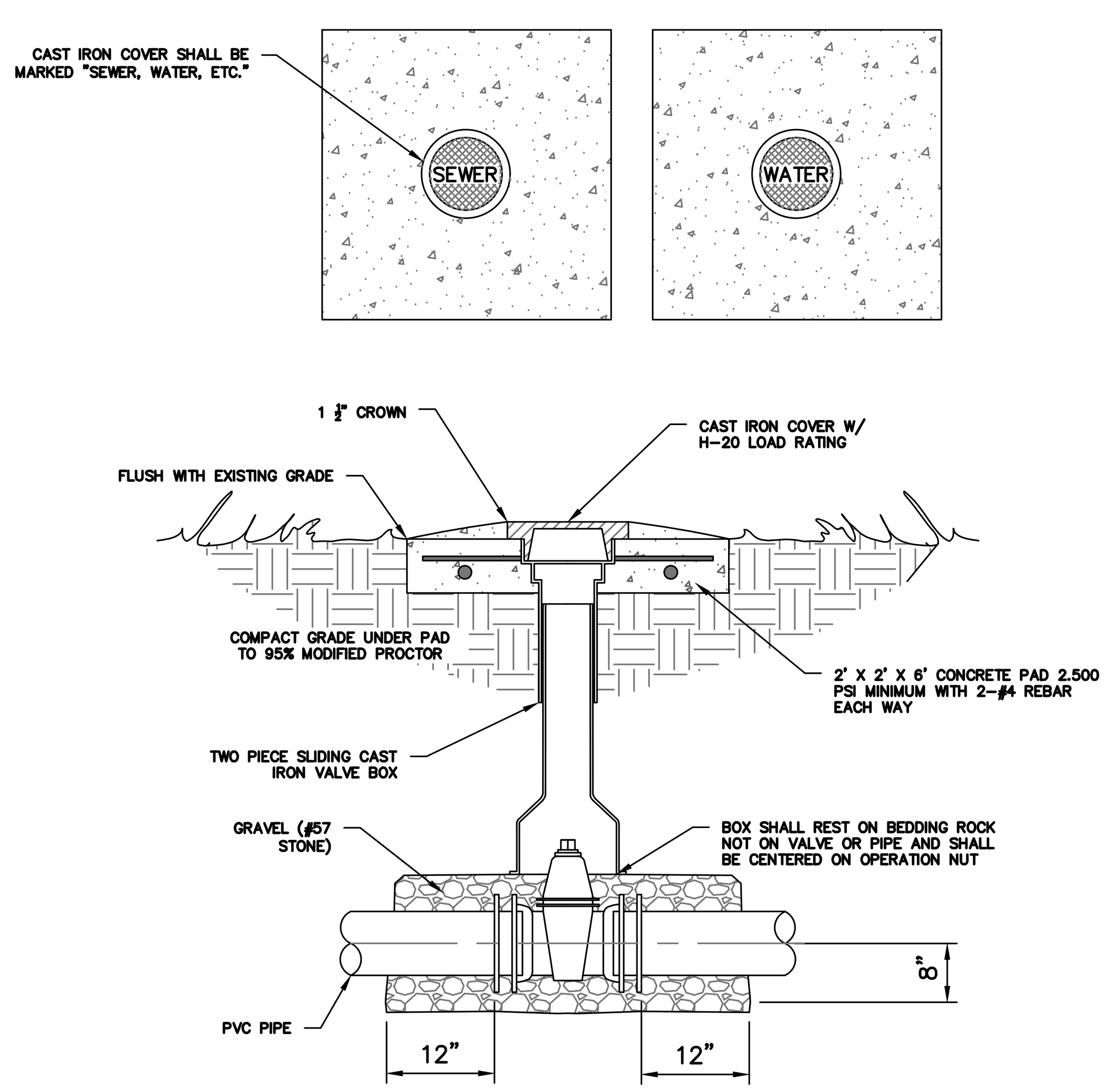

NOTE:
1. ALL CONCRETE PADS SHALL BE FORMED WITH WOOD, NO EXCEPTIONS.
2. CONTRACTOR SHALL PROVIDE DUCTILE IRON RISER EXTENSIONS IF NEEDED. PVC SHALL NOT BE USED FOR EXTENSIONS.

DETAIL- TYPICAL VALVE BOX & PAD
SCALE: N.T.S.

EB# 0006155

PREBLE RISH, INC
CONSULTING ENGINEERS AND SURVEYORS
CIVIL SURVEYING SITE PLANNING
324 MARINA DRIVE PORT ST. JOE, FL32456 (850)227-7200 | 203 ABERDEEN PARKWAY PANAMA CITY, FL 32405 (850) 522-0644 | 877 COUNTY ROAD 393 SANTA ROSA BEACH, FL 32459 (850)267-0759

TYPICAL VALVE BOX AND PAD
Water Distribution and Wastewater Collection System Standards
City of Freeport
Walton County
Florida

DATE: 11/14 | SCALE: N/A | DRAWN: SOE | CHECKED: CLK | PROJECT NO. 493.000 | SHEET UM-3

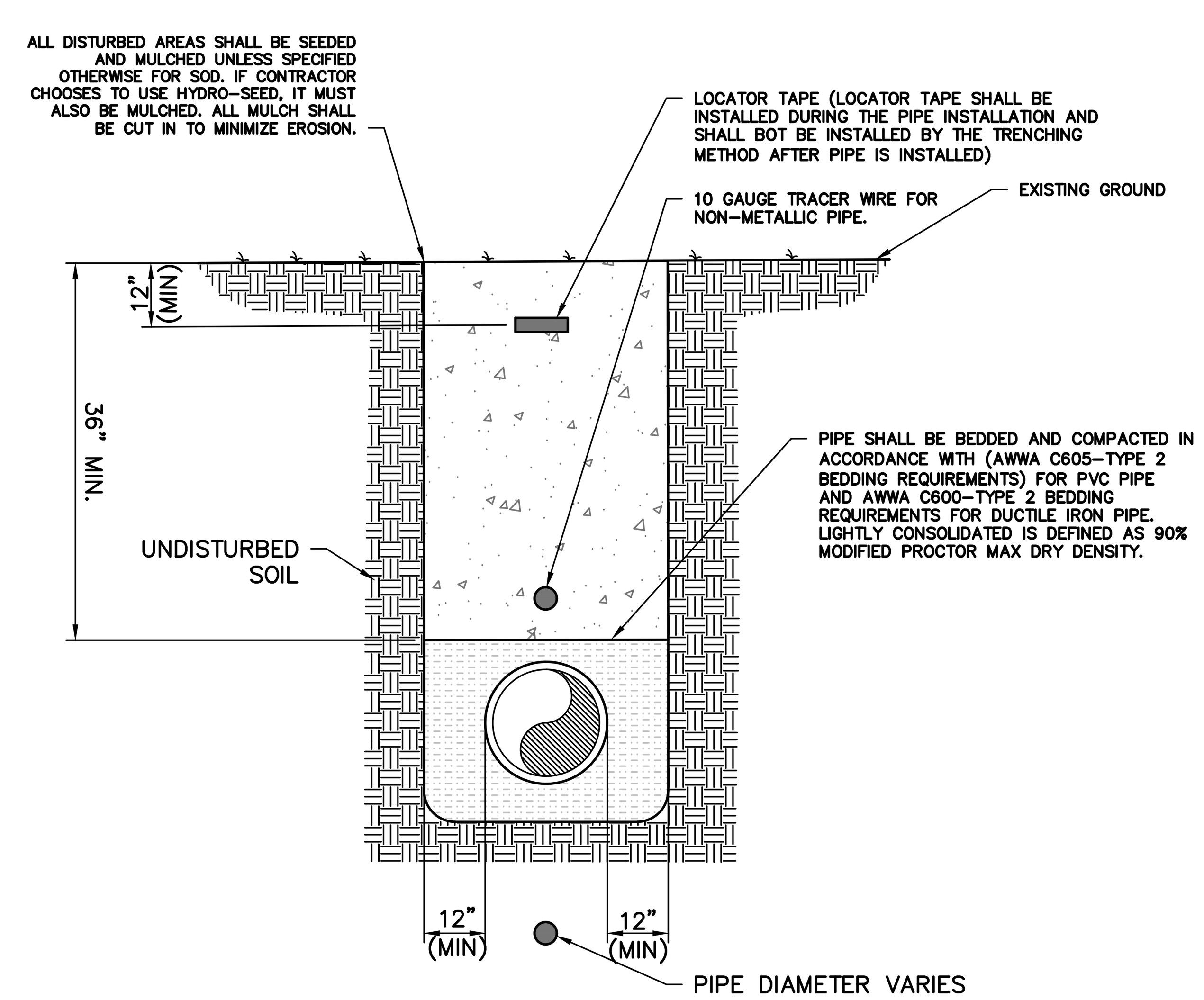

NOTES:
1. NO TRASH, RUBBISH, ROCKS OR DEBRIS WILL BE ALLOWED IN TRENCHES.
2. ALL PIPE SHALL BE INSTALLED IN DRY TRENCHES.
3. CONTRACTOR MAY BE REQUIRED BY THE ENGINEER TO WE-WATER PIPE TRENCH, IF NECESSARY.
4. AT THE ENGINEERS DISCRETION, THE CONTRACTOR SHALL SUBSTITUTE SELECT CONTRACTOR'S BID FORM.
5. THE CONTRACTOR WILL BE COMPENSATED FOR SELECT BACKFILL ONLY IF DIRECTED BY THE ENGINEER IN WRITING. THE ENGINEER MAY ISSUE A FIELD ORDER WITH WRITTEN CONFIRMATION WITHIN 24 HOURS.

DETAIL- TYPICAL PIPE BEDDING
SCALE: N.T.S.

EB# 0006155

PREBLE RISH, INC
CONSULTING ENGINEERS AND SURVEYORS
CIVIL SURVEYING SITE PLANNING
324 MARINA DRIVE PORT ST. JOE, FL32456 (850)227-7200 | 203 ABERDEEN PARKWAY PANAMA CITY, FL 32405 (850) 522-0644 | 877 COUNTY ROAD 393 SANTA ROSA BEACH, FL 32459 (850)267-0759

TYPICAL PIPE BEDDING
Water Distribution and Wastewater Collection System Standards
City of Freeport
Walton County
Florida

DATE: 11/14 | SCALE: N/A | DRAWN: SOE | CHECKED: CLK | PROJECT NO. 493.000 | SHEET UM-4

RESTRAINT LENGTH REQUIREMENTS FOR FITTING

FITTING	RESTRAINT LENGTH REQUIRED 4"	RESTRAINT LENGTH REQUIRED 6"	RESTRAINT LENGTH REQUIRED 8"	RESTRAINT LENGTH REQUIRED 10"	RESTRAINT LENGTH REQUIRED 12"	RESTRAINT LENGTH REQUIRED 14"	RESTRAINT LENGTH REQUIRED 16"
11 1/4° BEND	10'	10'	10'	10'	10'	10'	10'
22 1/2° BEND	10'	10'	20'	20'	20'	20'	20'
24° BEND	20'	20'	40'	40'	40'	40'	40'
90° BEND	40'	40'	40'	40'	80'	90'	100'
REDUCER	4X3 - 35'	6X4 - 35'	8X6 = 40'	10X8 = 39'	12X10 = 50'	14X12 = 50'	16X14 = 50'
45° VERTICAL OFFSET	UPPER 30'	UPPER 30'	UPPER 40'	UPPER 48'	UPPER 68'	UPPER 78'	UPPER 88'
	LOWER 7'	LOWER 7'	LOWER 9'	LOWER 11'	LOWER 13'	LOWER 14'	LOWER 16'
DEAD END	60'	60'	80'	80'	160'	190'	210'

TEE'S	RESTRAINT LENGTH
4"X4"	10' (BRANCH)
4"X4"	10' (BRANCH)

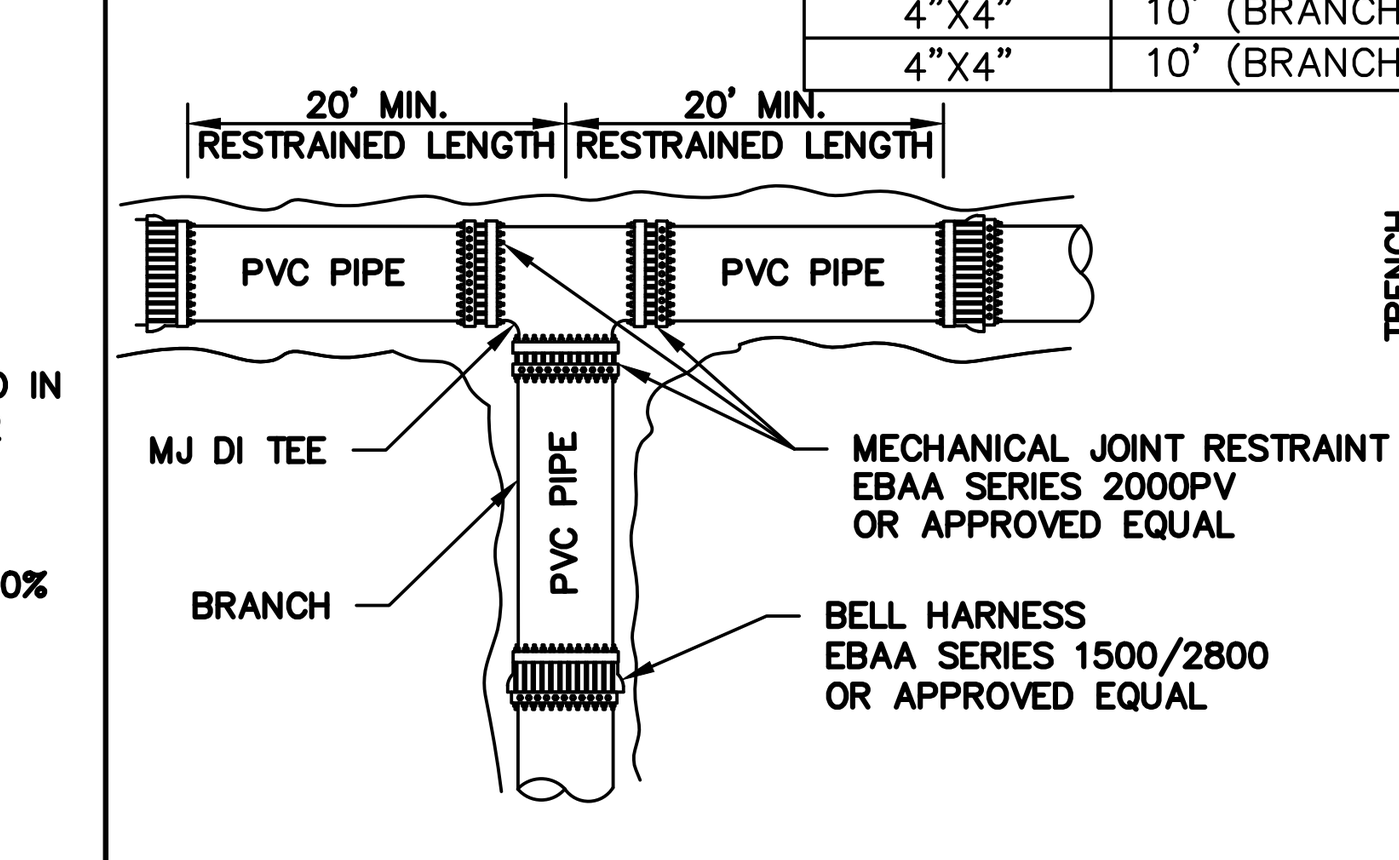

TEE RESTRAINT DETAIL
SCALE: N.T.S.

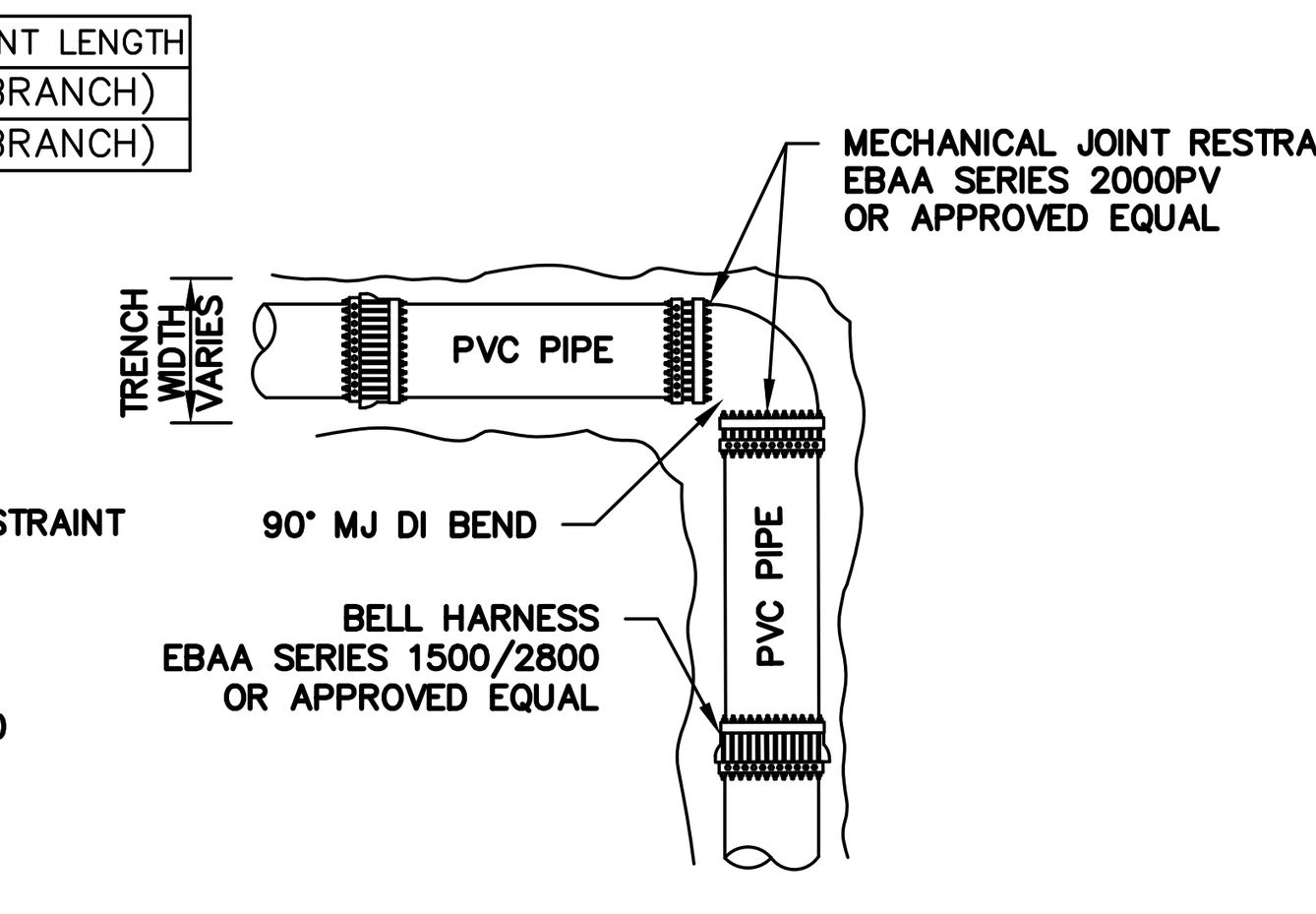

90° BEND RESTRAINT DETAIL
SCALE: N.T.S.

NOTES:
RESTRAINED JOINT PIPING SHALL BE USED FOR ALL THRUST RESTRAINTS . THE ADJACENT SCHEDULE GIVES MINIMUM PIPE LENGTHS (FT) TO BE RESTRAINED ON EACH SIDE OF THE STANDARD FITTINGS.

CONCRETE THRUST BLOCKS SHALL NOT BE USED, NO EXCEPTIONS.

SOME PIPE RESTRAINT REQUIREMENTS ARE SHOWN IN THE PLANS FOR SPECIFIC CIRCUMSTANCES.

ALL 45° AND 22-1/2° COMBINATION BENDS AND 22-1/2° 11-1/4° COMINATION BENDS SHALL BE TREATED AS 90° BENDS AND 45° BENDS, RESPECTIVELY, FOR RESTRAINED LENGTHS.

ALL FITIINGS AND RESTRAINED JOINTS MUST BE VISUALLY INSPECTED AND APPROVED BY THE ENGINEER BEFORE COVERED.

ALL VALVES SHALL BE RESTRAINED W/ EBAA SERIES 2000 PVC. MECHANICAL JOINT RESTRAINT OR APPROVED EQUAL.

BELL HARNESS RESTRAINTS SHALL BE EBAA SERIES 1500/2000 OR APPROVED EQUAL.

ALL DIRECTIONAL BORES SHALL BE RESTRAINED A MINIMUM OF 40'.

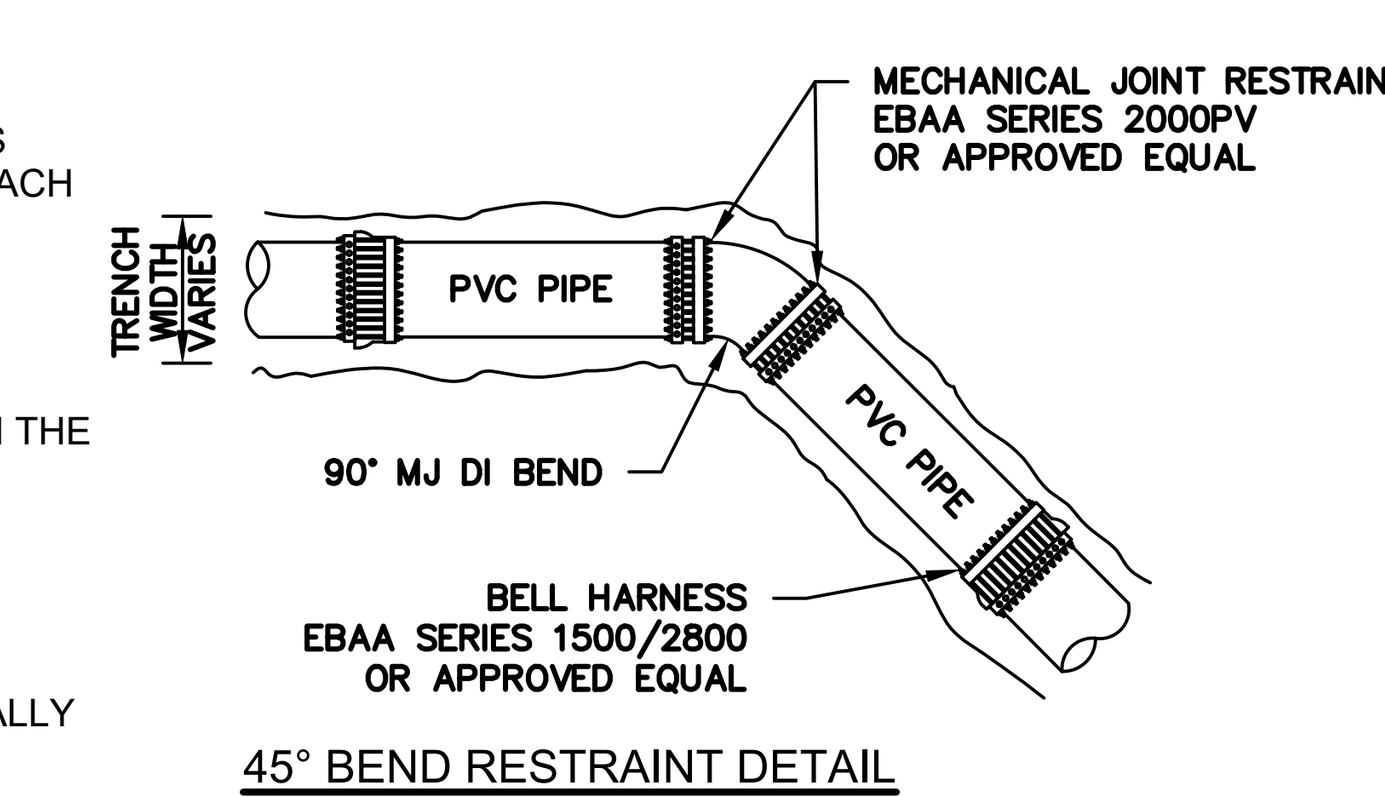

45° BEND RESTRAINT DETAIL
SCALE: N.T.S.
NOTE: 22 1/2" AND 11 1/4" BEND SHALL BE RESTRAINED THE SAME AS SHOWN ABOVE

DETAIL- THRUST RESTRAINTS
SCALE: N.T.S.

EB# 0006155

PREBLE RISH, INC
CONSULTING ENGINEERS AND SURVEYORS
CIVIL SURVEYING SITE PLANNING
324 MARINA DRIVE PORT ST. JOE, FL32456 (850)227-7200 | 203 ABERDEEN PARKWAY PANAMA CITY, FL 32405 (850) 522-0644 | 877 COUNTY ROAD 393 SANTA ROSA BEACH, FL 32459 (850)267-0759

THRUST RESTRAINT
Water Distribution and Wastewater Collection System Standards
City of Freeport
Walton County
Florida

DATE: 11/14 | SCALE: N/A | DRAWN: SOE | CHECKED: CLK | PROJECT NO. 493.000 | SHEET UM-7

RELEASE FOR BID

AVCON
TRANSFORMING TODAY'S IDEAS INTO TOMORROW'S REALITY

THIS DOCUMENT CONTAINS PRIVILEGED AND PROPRIETARY INFORMATION, ALL OF WHICH IS EXPRESSLY PROVIDED BY AVCON, INC., FOR USE BY THE INTENDED RECIPIENT, AND FOR A SPECIFIC PURPOSE. WITHOUT THE EXPRESS WRITTEN CONSENT OF AVCON, INC. ANY DISTRIBUTION, REPRODUCTION, OR OTHER USE OF THIS DOCUMENT, IN WHOLE OR IN PART, IS STRICTLY PROHIBITED

JOHN R. COLLINS
FL LICENSE NO.: 75419
FBPR CERTIFICATE OF AUTHORIZATION NO. 5057

NO.	DATE	REVISION	BY

UTILITY DETAILS (SHEET 1 OF 2)

RELEASE FOR BID

AIRPORT TERMINAL AND HANGAR DEVELOPMENT
PREPARED FOR
DEFUNIAK SPRINGS MUNICIPAL AIRPORT

DESIGNED BY: J.C.
DRAWN BY: D.F.
CHECKED BY: T.N.
APPROVED BY: V.L.
PROJECT NO: 2019.028.01
DATE: NOVEMBER 2021

SHEET NUMBER
C-13

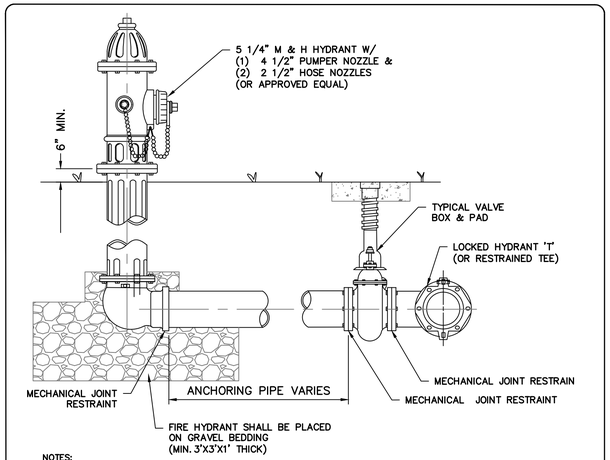

NOTES:

1.) HYDRANT SHALL BE MUELLER, M & H, AMERICAN DARLING, OR APPROVED EQUAL FIRE HYDRANT SHALL BE YELLOW, WITH STAINLESS STEEL EXTERNAL NUTS AND BOLTS.
2.) VALVE OPENING IS 5 1/4".
3.) HOSE NOZZLES:
TWO (2) 2 1/2" HOSE NOZZLES
ONE (1) 4 1/2" PUMPER NOZZLE
4.) HYDRANT SHALL BE PLACED WITH NOZZLES FACING STREET.
5.) HYDRANT PLACEMENT :
CURB AND GUTTER – BEHIND SIDE AS NOTED PER PLAN.
OPEN DITCH STREET – TOP OF BACK SLOPE OF DITCH ON THE RIGHT-OF-WAY LINE.
6.) SOME FIRE HYDRANTS MAY REQUIRE RISER EXTENSIONS AT NO ADDITIONAL COST TO THE OWNER.
7.) ALL PIPE FROM MAIN TO HYDRANT SHALL BE DUCTILE IRON, NO SUBSTITUTES.
8.) SIX INCH MJ TO MAIN.
9.) GATE VALVE IS TO BE RESTRAINED TO THE MAIN TO ALLOW REMOVAL OF FIRE HYDRANT WITHOUT BLOWING THE GATE VALVE OFF.
10.) FIRE HYDRANT TEE MAY BE USED IN LIEU OF RESTRAINED TEE.
11.) MINIMUM BURY IS 36".
12.) PROPER COMPACTION FOR BREAKAWAY WILL MEET 95% MODIFIED PROCTOR MAXIMUM DRY DENSITY.
13.) PLASTIC BAGS SHALL BE PLACED OVER ALL HYDRANTS UNTIL THEY ARE PLACED INTO SERVICE FOR USE.

DETAIL - STANDARD FIRE HYDRANT ASSEMBLY

SCALE: NTS

EB# 0006155

PREBLE RISH, INC CONSULTING ENGINEERS AND SURVEYORS CIVIL SURVEYING SITE PLANNING 228 MIRACLE STRIP PARKWAY SE, SUITE 1, FORT WALTON BEACH, FL 32548 (850) 244-7226 203 ANDERSON PARKWAY, DESTIN, FL 32541 (850) 424-4944 811 COUNTY ROAD 393, SANTA ROSA BEACH, FL 32459 (850)231-0778	STANDARD FIRE HYDRANT ASSEMBLY Water Distribution and Wastewater Collection System Standards City of Freeport Walton County Florida	DATE: 11/14	PROJECT NO. 493.000
		SCALE: N.A.	
		DRAWN: SVC	SHEET W-3
		CHECKED: CLK	

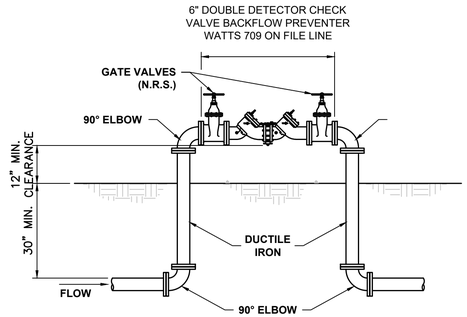

DOUBLE DETECTOR CHECK BACKFLOW PREVENTER DETAIL

SCALE: N.T.S.

GENERAL NOTES:

1. ALL FITTINGS SHALL BE CAST OR DUCTILE IRON.
2. PROVIDE THRUST BLOCKS FOR BELOW GROUND FITTINGS, SEE THRUST BLOCK DETAIL.
3. PROVIDE SUPPORTS UNDER BACKFLOW PREVENTER AS REQUIRED.
4. DOUBLE DETECTOR CHECK VALVE BACKFLOW PREVENTER FOR FIRE LINE SHALL INCLUDE A FIRE DEPARTMENT CONNECTION ON THE BACKFLOW AS REQUIRED BY AIRPORT FIRE DEPARTMENT.

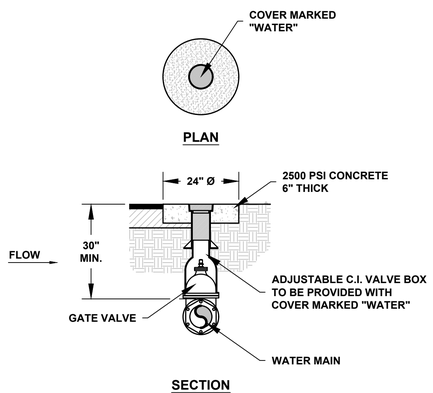

GATE VALVE AND VALVE BOX DETAIL

SCALE: N.T.S.

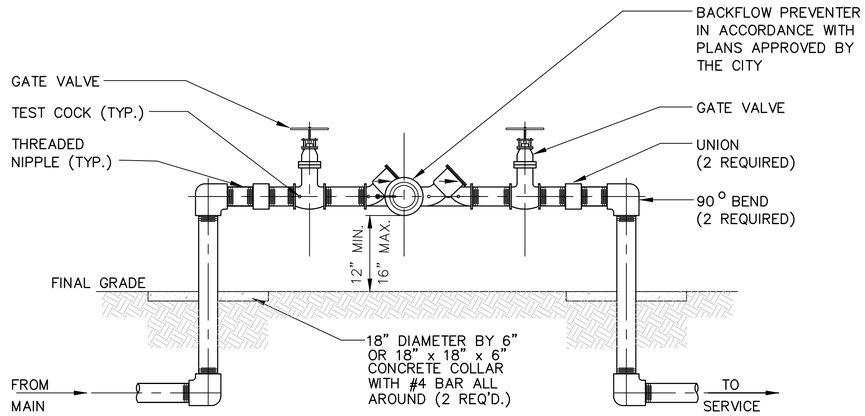

NOTES:
1. ALL PIPE AND FITTINGS 2" AND SMALLER SHALL BE THREADED SCHEDULE 40 GALVANIZED STEEL OR BRASS.

REDUCED PRESSURE BACKFLOW PREVENTER

NTS

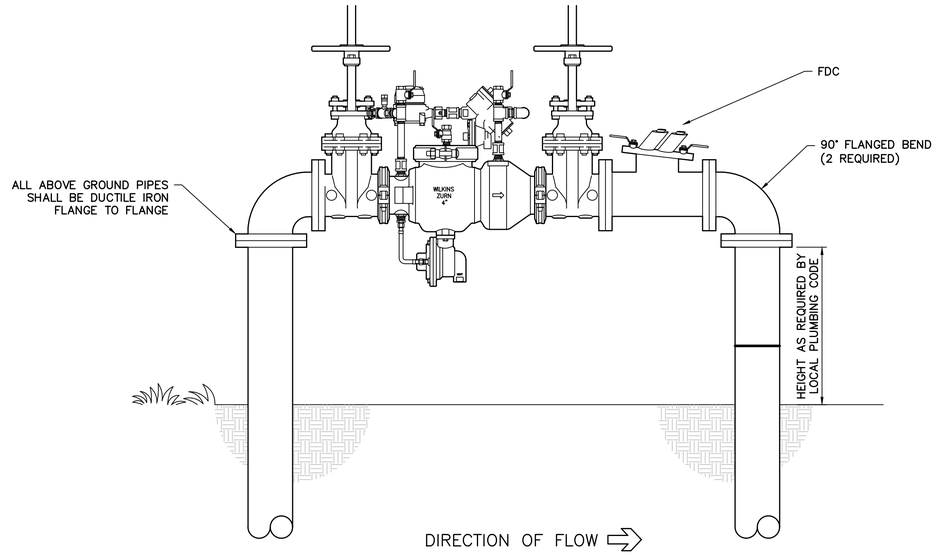

NOTES:

1. RPZ SHALL BE WILKINS UNLESS OTHERWISE APPROVED.
2. DEVICE SHALL BE INSULATED WITH APPROVED MATERIALS.

RPZ ASSEMBLY BACKFLOW PREVENTER 3" AND UP

RELEASE FOR BID

AVCON
TRANSFORMING TODAYS IDEAS INTO TOMORROW'S REALITY

JOHN R. COLLINS
FL LICENSE NO.: 75419
FBPR CERTIFICATE OF AUTHORIZATION NO. 5057

NO.	DATE	REVISION	BY

UTILITY DETAILS (SHEET 2 OF 2)

RELEASE FOR BID

AIRPORT TERMINAL AND HANGAR DEVELOPMENT

PREPARED FOR

DEFUNIAK SPRINGS MUNICIPAL AIRPORT

DESIGNED BY:	J.C.
DRAWN BY:	D.F.
CHECKED BY:	T.N.
APPROVED BY:	V.L.
PROJECT NO:	2019.028.01
DATE:	NOVEMBER 2021

SHEET NUMBER
C-14

THIS DOCUMENT CONTAINS PRIVILEGED AND PROPRIETARY INFORMATION, ALL OF WHICH IS EXPRESSLY PROVIDED BY AVCON, INC., FOR USE BY THE INTENDED RECIPIENT, AND FOR A SPECIFIC PURPOSE. WITHOUT THE EXPRESS WRITTEN CONSENT OF AVCON, INC, ANY DISTRIBUTION, REPRODUCTION, OR OTHER USE OF THIS DOCUMENT, IN WHOLE OR IN PART, IS STRICTLY PROHIBITED

N:\NICEVILLE_PROJECTS\028_DEFUNIAK_AIRPORT\2019.028.01 – TERMINAL DEVELOPMENT\000_CAD\190201_UTILITY_PLAN.DWG 1/18/2022 9:05 AM

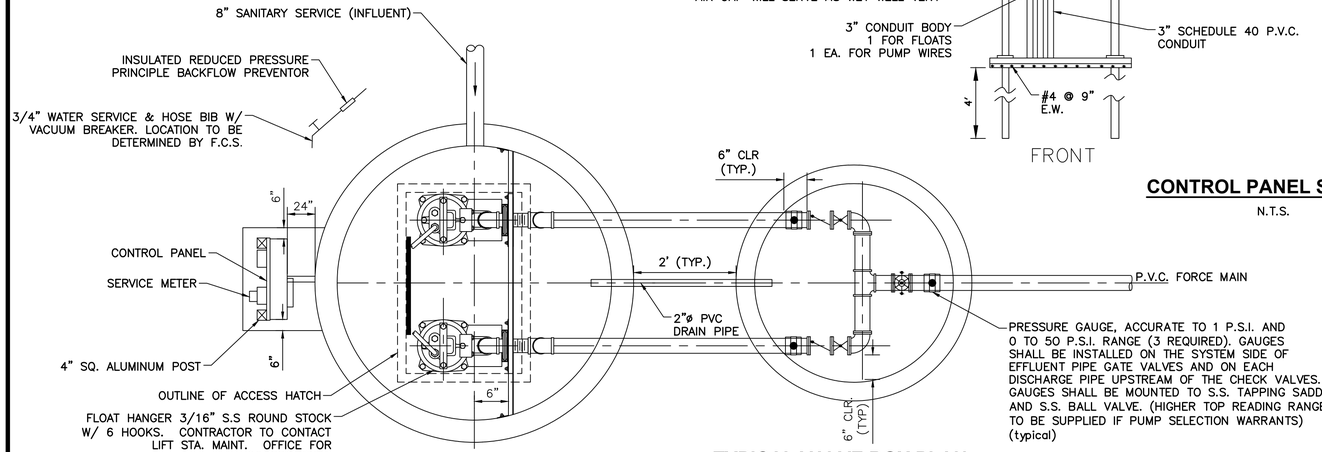

TYPICAL WET WELL PLAN

N.T.S.

TYPICAL VALVE BOX PLAN

N.T.S.

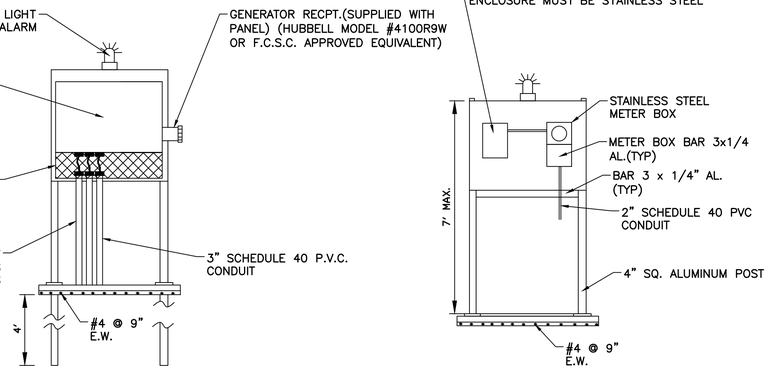

CONTROL PANEL SCHEMATIC

N.T.S.

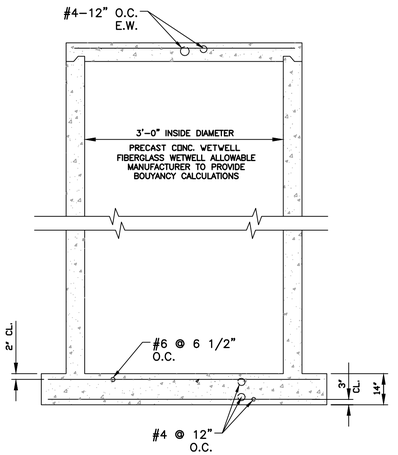

TOP AND BOTTOM SLAB REINFORCING

GRINDER LIFT STATION

N.T.S.

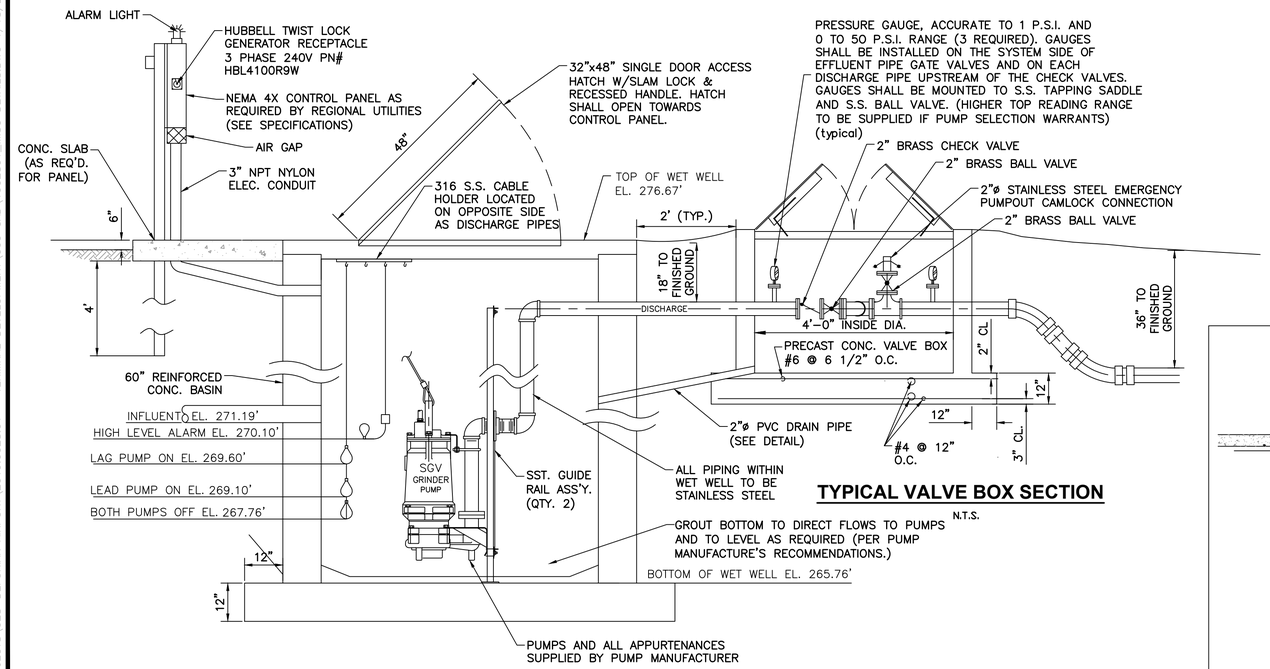

GRINDER LIFT STATION SECTION

N.T.S.

TYPICAL VALVE BOX SECTION

N.T.S.

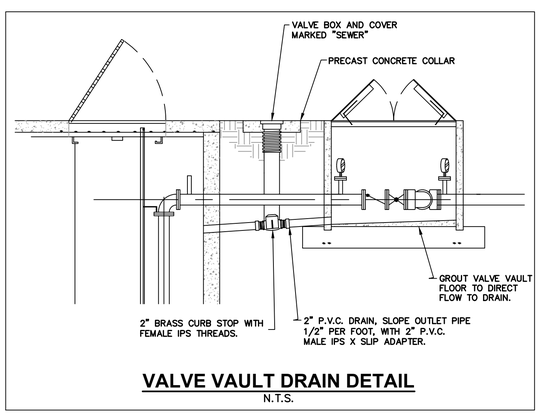

VALVE VAULT DRAIN DETAIL

N.T.S.

PUMPING STATION DATA

Designation	
Pump model	BARNES SGV3032L
Impeller	4.5 IN
voltage (3 PHASE)	240 Volt
h.p.	2
r.p.m.	3450 R.P.M
Influent Size	6.00 IN
Force main	2.00 IN

GENERAL NOTES:

1. WET WELL AND VALVE VAULT SHALL BE COATED WITH KOP-COAL TAR EPOXY 300-M INSIDE AND OUT. (TWO COATS, 9MILS EACH)
2. BASE AND FIRST RISER UNIT TO BE CAT MONOLITHIC.
3. VALVE VAULT SHALL BE SIZED TO PERMIT EASY REMOVAL OF CHECK VALVE.
4. ALL LOCATIONS WHERE PIPES ENTER OR LEAVE THE WET WELL OR VALVE VAULT SHALL BE MADE WATERTIGHT WITH WALL SLEEVE OR NON-SHRINK.
5. THERE SHALL BE NO VALVES OR ELECTRICAL JUNCTION BOXES IN WET WELL.
6. WET WELL AND VALVE VAULT COVERS SHALL BE ALUMINUM WITH 316 S.S. HARDWARE SIZE AS REQUIRED BY PUMP MANUFACTURE AND APPROVED BY FLORIDA COMMUNITY SERVICES.
7. FLEXIBLE COUPLING IF USED SHALL BE SLEEVE TYPE.
8. ALL HARDWARE IN WET WELL AND VALVE BOX TO BE STAINLESS STEEL.
9. ALL ENCLOSURES SHALL BE NEMA 3R OR BETTER EXCEPT CONTROL PANEL WHICH SHALL BE NEMA 4X.
10. ALL MECHANICAL JOINT FITTINGS ON PRESSURE PIPE SHALL HAVE BOTH 'MEGALUG' TYPE JOINT RESTRAINING CLANDS AND THRUST BLOCKS.
11. THE CONTRACTOR IS RESPONSIBLE FOR OBTAINING AND MEETING THE REQUIREMENTS OF REGIONAL UTILITIES STANDARD DETAILS AND SPECIFICATIONS LATEST EDITION.
12. ANY LOCATION WHERE PRESSURE PIPELINES CURVATURE EXCEEDS MANUFACTURES' SPECIFICATIONS; APPROPRIATE MECHANICAL JOINT FITTINGS SHALL BE USED.
13. ALL 2-INCH VALVE SHALL BE BALL TYPE- 2 - INCH GATE VALVE SHALL NOT BE USED.
14. ALL TIE IN TO EXISTING PRESSURIZED PIPELINES SHALL BE BY TAPPING SLEEVE (3 INCH TAP AND LARGER) (OR TAPPING SADDLE, 2 INCH TAP AND SMALLER) AND VALVE W/VALVE BOX.
15. DEVELOPERS OF PRIVATE PROJECTS SHALL PROVIDE ALL WETLANDS PERMITS NECESSARY FOR UTILITY CONSTRUCTIONS.
16. ALL GRINDER LIFT STATIONS LOCATED IN A PUBLIC RIGHT- OF- WAY MUST BE DESIGNED AND CONSTRUCTED OF REINFORCED CONCRETE AS PER THE SECTION TITLED 'STRUCTURAL AND OTHER NOTES' DETAILED BELOW.

STRUCTURAL AND OTHER NOTES:

1. CONCRETE: DESIGN PER CURRENT EDITION OF A.C.I (318-83).
   CONCRETE STRENGTH @ 28 DAYS IS:
   Fc' = 3500 PSI

   CONCRETE MIX SHOULD NOT CONTAIN MORE THAN 5 GALLSONS OF WATER PER SACK OF CEMENT. AGGREGGATES SHOULD HAE LOW ABSORPTION AND SHOULD BE CLEAN, SOUND AND WELL GRADED FORM FINE TO COARSE. SAND MUST HAVE 10 TO 20 PERCENT OF PARTICLES PASSING A 50 MESH SIEVE. COASTE AGGREGATE MUST BE GRADED FROM ¼" UP TO A MAXIMUM OF 2", KEEPING THE CONCRETE CURED FOR ATLEAST 7 DAYS IS ADVISABLE. REINFORCING ASTM A-615, GRADE 60.
2. CLEAR COVER FOR BASE SLAB - 3" FOR BOTTOM BARS AND - 2" FOR TOP BARS.
3. CLEAR COVER FOR TOP SLAB - 2" FOR TOP & BOTTOM BARS.
4. CLEAN SAND BACKFILL WITH A FRICTION FACTOR OF 30° ROUND AND WEIGHING 120 PCF TO 130 PCF IS ASSUMED. THE DESIGN IS BASED ON A SUBMERGED CONDITION.
5. ALL REINFORCING SHALL BE SECURELY HELD IN POSITION WITH STANDARD ACCESSORIES DURING THE PLACING OF CONCRETE.
6. SPLICES IN REINFORCEMENT AR ENOT PERMITTED
7. IF FOTTING ELEVATIONS SHOWN OCCUR IN A DISTURBED, UNSTABLE OR UNSUITABLE SOIL, THE ENGINEER SHALL BE NOTIFIED.
8. MAXIMUM DESIGN SOIL PRESSURE ASSUMED = 2000 PSF.
9. ALL GRAVITY SEWER AND SEWER SERVICES SHALL HAVE CONCRETE ENCASEMENT WHERE COVER IS LESS THAN 30 INCHES UNDER PAVEMENT OR LESS THAN 18 INCHES IN GREEN AREAS.
10. AT ALL HIGH POINTS CREATED DURING FORCE MAIN CONSTRUCTION, AIR RELEASE VALVES SHALL BE CONSTRUCTED.
11. EXTERNAL DROP TYPE MANHOLES ARE REQUIRED WHERE MANHOLE INVERT ELEVATIONS VARY BY OVER TWO FEET.
12. MANHOLE TOPS IN GREEN AREAS SHALL BE ELEVATED TO PROHIBIT STORMWATER ENTRY.
13. SEWER SERVICES SHALL BE CONSTRUCTED AT THE LOWER SIDE OF LOTS AS MAY BE APPLICABLE.

RELEASE FOR BID

AVCON
TRANSFORMING TODAY'S IDEAS INTO TOMORROW'S REALITY

JOHN R. COLLINS
FL LICENSE NO.: 75419
FBPR CERTIFICATE OF AUTHORIZATION NO. 5057

NO.	DATE	REVISION	BY

GRINDER PUMP DETAILS

RELEASE FOR BID

AIRPORT TERMINAL AND HANGAR DEVELOPMENT

PREPARED FOR

DEFUNIAK SPRINGS MUNICIPAL AIRPORT

DESIGNED BY:	J.C.
DRAWN BY:	D.F.
CHECKED BY:	T.N.
APPROVED BY:	V.L.
PROJECT NO:	2019.028.01
DATE:	NOVEMBER 2021

SHEET NUMBER
C-15

THIS DOCUMENT CONTAINS PRIVILEGED AND PROPRIETARY INFORMATION, ALL OF WHICH IS EXPRESSLY PROVIDED BY AVCON, INC. FOR USE BY THE INTENDED RECIPIENT, AND FOR A SPECIFIC PURPOSE. WITHOUT THE EXPRESS WRITTEN CONSENT OF AVCON, INC. ANY DISTRIBUTION, REPRODUCTION, OR OTHER USE OF THIS DOCUMENT, IN WHOLE OR IN PART, IS STRICTLY PROHIBITED

N:\NICEVILLE_PROJECTS\028_DEFUNIAK_AIRPORT\2019.028.01 - TERMINAL DEVELOPMENT\000_CAD\190201_MISC_DETAILS.DWG, 1/18/2022 9:05 AM

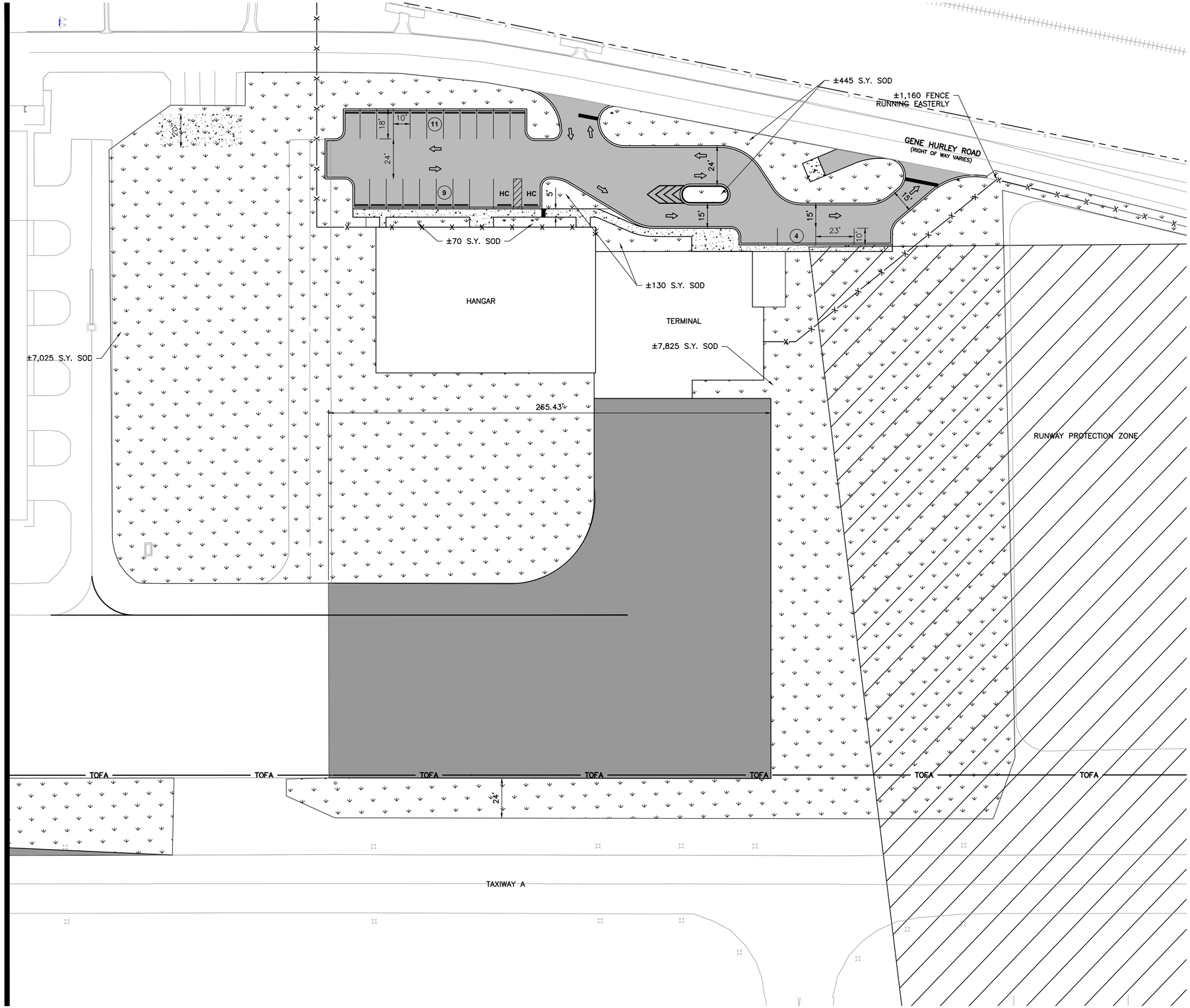

North

0 15 30 60

GRAPHIC SCALE IN FEET

LEGEND

- EXISTING CONDITIONS
- PROPOSED EDGE OF PAVEMENT
- PROPOSED SOD

GENERAL NOTES:

1. SOD SHALL BE CERTIFIED TO BE FREE OF MILLET SEED AND NOXIOUS WEEDS BY THE FLORIDA DEPARTMENT OF AGRICULTURE, DIVISION OF PLANT INDUSTRY.
2. ALL DISTURBED AREAS SHALL BE SODDED. IF AREAS TO BE SODDED ARE OUTSIDE OF THE LIMITS SHOWN ON THIS SHEET, THIS SODDING SHALL BE AT THE CONTRACTORS EXPENSE.
3. SOD FOR RESTORATION PURPOSES TO BE OF SAME SPECIES AND TYPE.
4. CONTRACTOR IS RESPONSIBLE FOR MINIMIZING AND REPAIRING EROSION DURING CONSTRUCTION AND SHALL BE RESPONSIBLE FOR PROTECTING NEW SOD FROM EROSION UNTIL THE SOD IS FULLY ESTABLISHED.
5. CONTRACTOR SHALL WATER SOD REGULARLY TO ENSURE SOD BECOMES ESTABLISHED. PAYMENT FOR SOD SHALL NOT BE PROVIDED UNTIL A HEALTHY STAND OF SOD IS ESTABLISHED.

MATCHLINE SEE SHEET C-17

RELEASE FOR BID

AVCON

TRANSFORMING TODAY'S IDEAS INTO TOMORROW'S REALITY

JOHN R. COLLINS
FL LICENSE NO.: 75419
FBPR CERTIFICATE OF AUTHORIZATION NO. 5057

NO.	DATE	REVISION	BY

SOD LOCATION PLAN (SHEET 1 OF 2)

RELEASE FOR BID

AIRPORT TERMINAL AND HANGAR DEVELOPMENT

PREPARED FOR

DEFUNIAK SPRINGS MUNICIPAL AIRPORT

DESIGNED BY:	J.C.
DRAWN BY:	D.F.
CHECKED BY:	T.N.
APPROVED BY:	V.L.
PROJECT NO:	2019.028.01
DATE:	NOVEMBER 2021

SHEET NUMBER

C-16

THIS DOCUMENT CONTAINS PRIVILEGED AND PROPRIETARY INFORMATION, ALL OF WHICH IS EXPRESSLY PROVIDED BY AVCON, INC., FOR USE BY THE INTENDED RECIPIENT, AND FOR A SPECIFIC PURPOSE. WITHOUT THE EXPRESS WRITTEN CONSENT OF AVCON, INC. ANY DISTRIBUTION, REPRODUCTION, OR OTHER USE OF THIS DOCUMENT, IN WHOLE OR IN PART, IS STRICTLY PROHIBITED

N:\NICEVILLE_PROJECTS\028_DEFUNIAK_AIRPORT\2019.028.01 - TERMINAL DEVELOPMENT\000_CAD\190801_SOD_PLAN.DWG 1/18/2022 9:06 AM

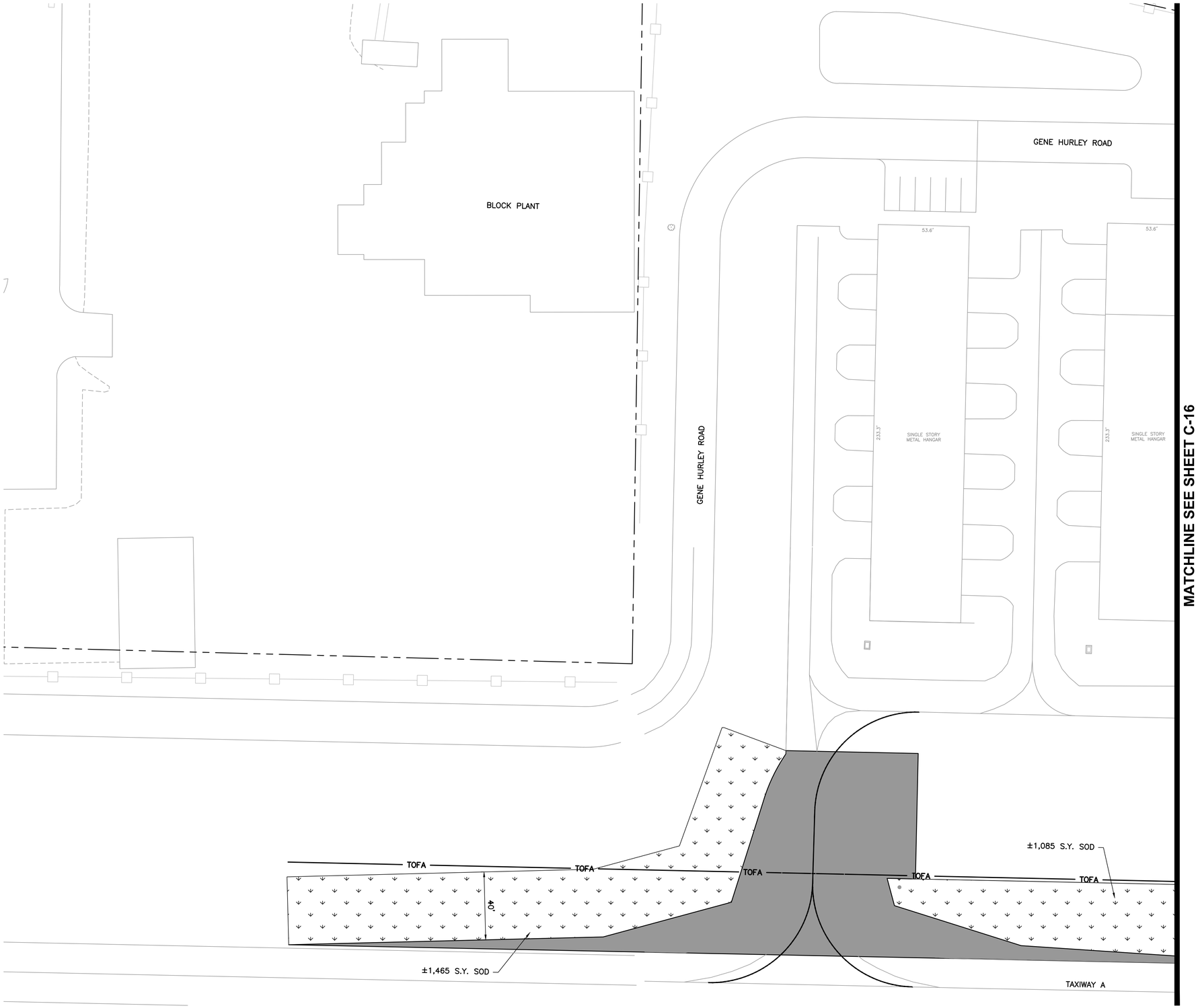

North

0 15 30 60

GRAPHIC SCALE IN FEET

LEGEND

- EXISTING CONDITIONS
- PROPOSED EDGE OF PAVEMENT
- PROPOSED SOD

RELEASE FOR BID

AVCON

TRANSFORMING TODAY'S IDEAS INTO TOMORROW'S REALITY

JOHN R. COLLINS
FL LICENSE NO.: 75419
FBPR CERTIFICATE OF AUTHORIZATION NO. 5057

NO.	DATE	REVISION	BY

SOD LOCATION PLAN (SHEET 2 OF 2)

RELEASE FOR BID

AIRPORT TERMINAL AND HANGAR DEVELOPMENT

PREPARED FOR

DEFUNIAK SPRINGS MUNICIPAL AIRPORT

THIS DOCUMENT CONTAINS PRIVILEGED AND PROPRIETARY INFORMATION, ALL OF WHICH IS EXPRESSLY PROVIDED BY AVCON, INC., FOR USE BY THE INTENDED RECIPIENT, AND FOR A SPECIFIC PURPOSE. WITHOUT THE EXPRESS WRITTEN CONSENT OF AVCON, INC. ANY DISTRIBUTION, REPRODUCTION, OR OTHER USE OF THIS DOCUMENT, IN WHOLE OR IN PART, IS STRICTLY PROHIBITED

DESIGNED BY:	J.C.
DRAWN BY:	D.F.
CHECKED BY:	T.N.
APPROVED BY:	V.L.
PROJECT NO:	2019.028.01
DATE:	NOVEMBER 2021

SHEET NUMBER

C-17

N:\NICEVILLE_PROJECTS\028_DEFUNIAK AIRPORT\2019.028.01 - TERMINAL DEVELOPMENT\000 CAD\190201_SOD PLAN.DWG 1/18/2022 9:05 AM

RELEASE FOR BID

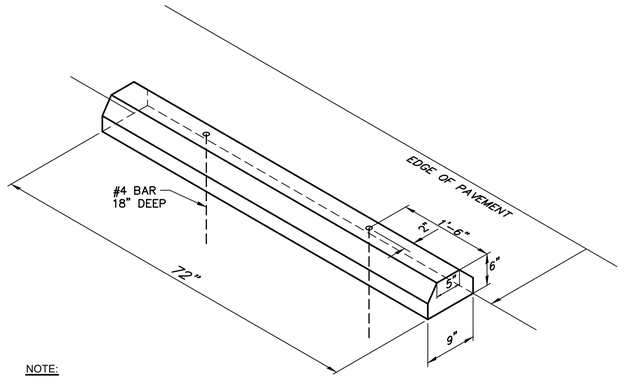

NOTE:

1. WHEEL STOP SHALL BE BARCO PRODUCTS, MODEL # WHLSTP, YELLOW, 6" SOLID WHEEL STOP, 72"X6"X4", OR APPROVED EQUAL.
2. ALL PROPOSED PARKING SPACES REQUIRE WHEEL STOPS.

WHEEL STOP (RECYCLABLE MATERIALS)

N.T.S.

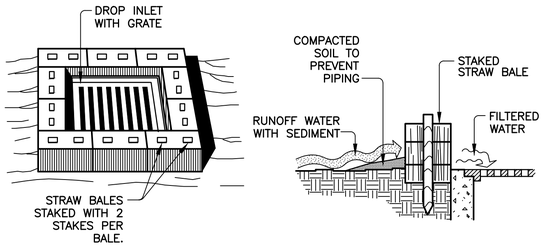

STRAW BALE DROP INLET SEDIMENT FILTER DETAIL

N.T.S.

1. THIS METHOD OF INLET PROTECTION IS APPLICABLE WHERE THE INLET DRAINS A RELATIVELY FLAT AREA (SLOPES NO GREATER THAN 5 PERCENT) WHERE SHEET OR OVERLAND FLOWS (NOT EXCEEDING 0.5 CFS) ARE TYPICAL. THE METHOD SHALL NOT APPLY TO INLETS RECEIVING CONCENTRATED FLOWS, SUCH AS IN STREET OR HIGHWAY MEDIANS.
2. CONTRACTOR SHALL UTILIZE HAY BALES TO PROTECT EXISTING OR PROPOSED INLETS WITHIN THE CONSTRUCTION AREA.

GENERAL NOTES:

1. ALL SEDIMENT CONTROL MEASURES SHOWN OF THESE PLANS ARE TO BE ADJUSTED TO MEET FIELD CONDITIONS AT THE TIME OF CONSTRUCTION AND SHALL BE CONSTRUCTED PRIOR TO ANY GRADING OR DISTURBANCE OF EXISTING SURFACE MATERIAL ON THE BALANCE OF THE SITE.
2. PERIODIC INSPECTION AND MAINTENANCE OF ALL SEDIMENT CONTROL DEVICES MUST BE PROVIDED TO ENSURE INTENDED PURPOSE IS ACCOMPLISHED AT NO ADDITIONAL COST TO THE OWNER.
3. ALL TEMPORARY EARTH BERMS AND DIVERSIONS ARE TO BE MACHINE COMPACTED AND SODDED FOR TEMPORARY VEGETATIVE COVER WITHIN 10 DAYS AFTER GRADING.
4. AFTER ANY SIGNIFICANT RAINFALL, SEDIMENT CONTROL STRUCTURES WILL BE INSPECTED FOR INTEGRITY, ANY DAMAGED DEVICES SHALL BE CORRECTED IMMEDIATELY AT NO ADDITIONAL COST TO THE OWNER.
5. THE IN PLACE SEDIMENT CONTROL MEASURES WILL BE MAINTAINED ON A CONTINUING BASIS UNTIL THE SITE IS PERMANENTLY STABILIZED AND ALL PERMIT REQUIREMENTS ARE MET.
6. THE CONSTRUCTION OF SWALES SHALL BE PERFORMED PRIOR TO CONSTRUCTION OF IMPERVIOUS AREAS.
7. EXISTING AND PROPOSED INLET OPENINGS IN THE PROJECT SHALL BE COVERED WITH FILTER FABRIC AND SURROUNDED BY TYPE III SILT FENCE ALONG WITH HAYBALES.
8. THE CONTRACTOR SHALL MINIMIZE THE EXTENT OF EXPOSED EARTH AT ONE TIME DURING CONSTRUCTION AND UTILIZE WATERING TRUCKS TO WET THE EARTH DURING DRY MONTHS TO MINIMIZE EROSION DUE TO WIND.
9. UPON COMPLETION OF CONSTRUCTION ALL DISTURBED AREAS, AS A MINIMUM, SHALL BE SEEDED AND MULCHED AND COMPACTED EQUIVALENT TO THAT OF NATIVE SURROUNDING EARTH.
10. CONTRACTOR SHALL NOTIFY THE ENGINEER IF EROSION CONTROL ISSUES DEVELOP ONSITE.
11. SEE DETAILS THIS SHEET FOR EROSION CONTROL DETAILS.
12. SAW-CUT CLEAN EDGES AND MATCH EXISTING GRADE FOR ALL DEMOLITION TIE-IN LOCATIONS. APPLY TACK COAT ON ALL EDGES PER FDOT 300.
13. STRIPPINGS (6" DEPTH) INTENDED FOR USE AS TOPSOIL PER FDOT 987.
14. SAW CUT MIN 2 FOOT BACK OR PER FLEX BUTT JOINT DETAIL, TYPICAL PAVEMENT SECTION AND DETAILS SHEET(S), WHICHEVER IS GREATER. BUTT JOINT REQUIRES TACK AND CLEAN SAW CUT FOR THE FULL LENGTH OF THE TIE-IN.
15. CONTRACTOR SHALL PROTECT EXISTING SIGNS TO ENSURE THEY ARE NOT DAMAGED DURING CONSTRUCTION. IF SIGNS ARE DAMAGED THEY SHALL BE REPLACED BY CONTRACTOR AT NO ADDITIONAL COST TO THE OWNER.
16. CONTRACTOR SHALL BE REQUIRED TO CLEAN EXISTING DRAINS AND PIPES. ALL PIPES AND DRAINS SHALL BE FREE FROM DIRT AND DEBRIS PRIOR TO OWNER ACCEPTING THE PROJECT.

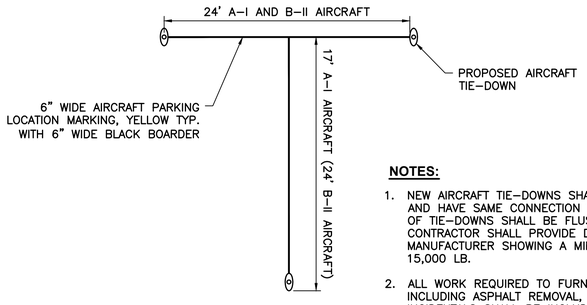

NOTES:

1. NEW AIRCRAFT TIE-DOWNS SHALL INCLUDE A HELICAL ANCHOR AND HAVE SAME CONNECTION TYPE AS EXISTING TIE-DOWNS, TOP OF TIE-DOWNS SHALL BE FLUSH WITH EXISTING GRADE. CONTRACTOR SHALL PROVIDE DOCUMENTATION FROM MANUFACTURER SHOWING A MINIMUM PULL-OUT STRENGTH OF 15,000 LB.
2. ALL WORK REQUIRED TO FURNISH AND INSTALL TIE-DOWNS INCLUDING ASPHALT REMOVAL, EXCAVATION, CONCRETE, AND ALL INCIDENTALS SHALL BE INCLUDED IN PAY ITEM TD-1-1 FOR A-I AIRCRAFT AND TD-1-2 FOR B-II AIRCRAFT. TIE-DOWNS SHALL BE INSTALLED IN ACCORDANCE WITH MANUFACTURERS RECOMMENDATIONS.

AIRCRAFT PARKING LOCATION MARKING

N.T.S.

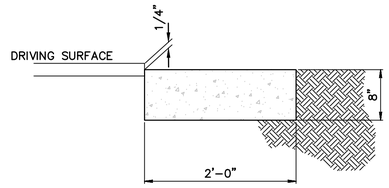

CONCRETE RIBBON CURB

N.T.S.

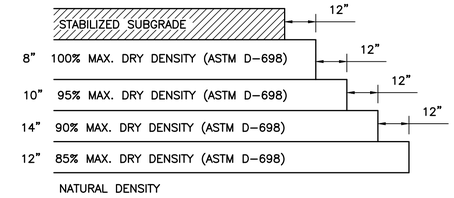

SUBGRADE COMPACTION

N.T.S.

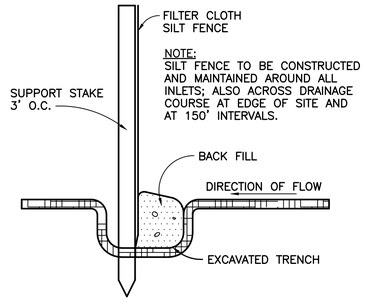

TYPE III SILT FENCE DETAIL

N.T.S.

1. EROSION PROTECTION: SOIL EROSION SEDIMENTATION MUST BE CONTROLLED AND RETAINED ON SITE DURING CONSTRUCTION. THEREFORE, EROSION PROTECTION, SUCH AS STAKED BALED HAY AND SILT FENCE BARRIERS, MUST BE INSTALLED PRIOR TO START OF CONSTRUCTION.
2. SILT FENCE BARRIER SHALL BE INSTALLED AS SHOWN ON PLANS, AND IN ALL AREAS SUBJECT TO SOIL EROSION SEDIMENTATION.
3. STORMWATER DETENTION AREAS SHALL BE SODDED.
4. GRADES AT CURBS ARE AT FLOWLINE.
5. SEE SHEET C-3 FOR SILT FENCE LOCATIONS.

RELEASE FOR BID

N:\NICEVILLE_PROJECTS\2019.028_DEFUNIAK AIRPORT\2019.028.01 - TERMINAL DEVELOPMENT\000_CAD\190201_MISC DETAILS.DWG 1/18/2022 9:06 AM

AVCON

TRANSFORMING TODAY'S IDEAS INTO TOMORROW'S REALITY

JOHN R. COLLINS
FL LICENSE NO.: 75419
FBPR CERTIFICATE OF
AUTHORIZATION NO. 5057

NO.	DATE	REVISION	BY

MISCELLANEOUS DETAILS (1 OF 2)

RELEASE FOR BID

AIRPORT TERMINAL AND HANGAR DEVELOPMENT

PREPARED FOR

DEFUNIAK SPRINGS MUNICIPAL AIRPORT

DESIGNED BY:	J.C.
DRAWN BY:	D.F.
CHECKED BY:	T.N.
APPROVED BY:	V.L.
PROJECT NO:	2019.028.01
DATE:	NOVEMBER 2021

SHEET NUMBER
C-18

THIS DOCUMENT CONTAINS PRIVILEGED AND PROPRIETARY INFORMATION, ALL OF WHICH IS EXPRESSLY PROVIDED BY AVCON, INC., FOR USE BY THE INTENDED RECIPIENT, AND FOR A SPECIFIC PURPOSE. WITHOUT THE EXPRESS WRITTEN CONSENT OF AVCON, INC. ANY DISTRIBUTION, REPRODUCTION, OR OTHER USE OF THIS DOCUMENT, IN WHOLE OR IN PART, IS STRICTLY PROHIBITED

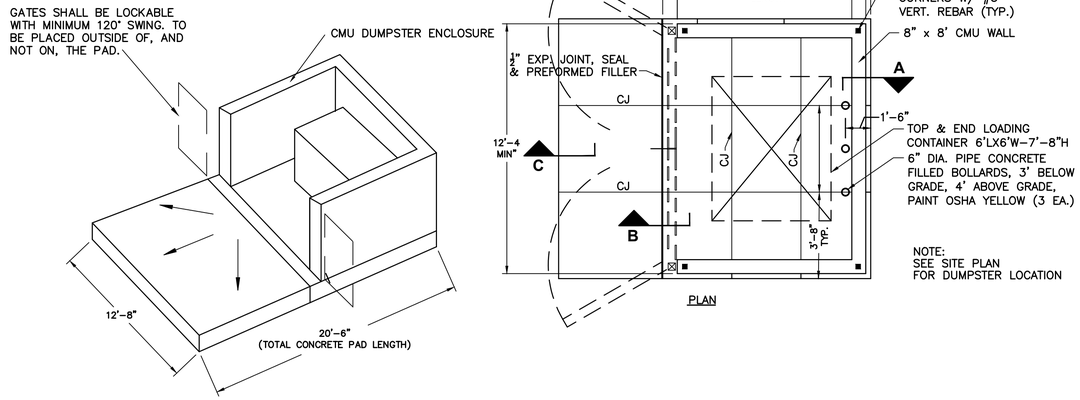

DUMPSTER PAD DETAIL
N.T.S.

SPECIAL NOTE:
CONSTRUCTION OF ENCLOSURE TO BE DONE PRIOR TO FINAL ACCEPTANCE OF THIS PROJECT. ALL WORK ON THIS SHEET IS INCIDENTAL TO PAY ITEM 522–2, DUMPSTER PAD AND ENCLOSURE, COMPLETE.

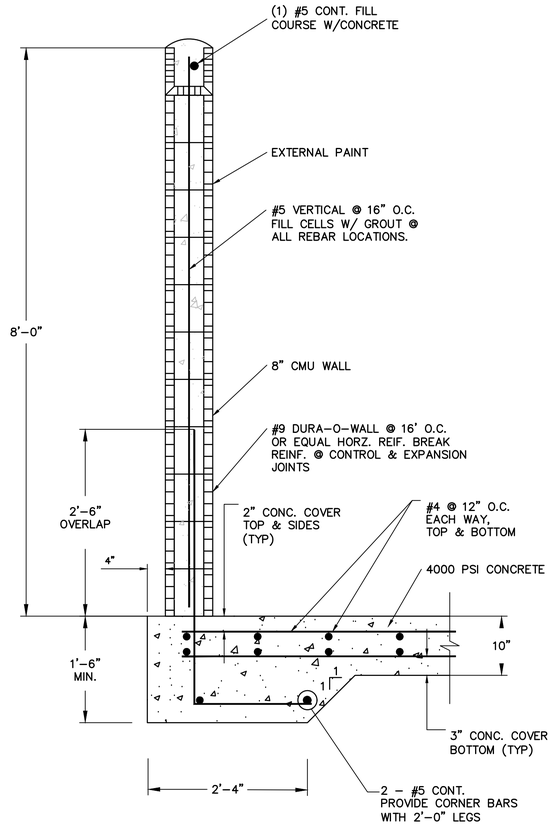

SECTION A
DUMPSTER ENCLOSURE
N.T.S.

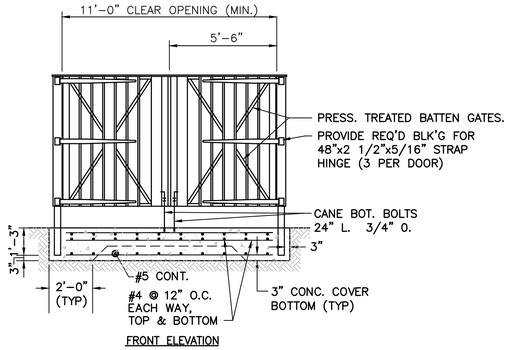

DUMPSTER GATE DETAIL
N.T.S.

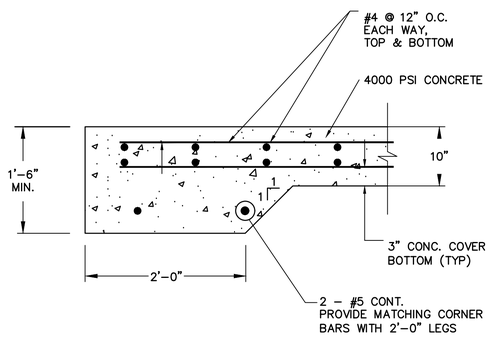

SECTION C
TYP. TURN-DOWN-SLAB EDGE
N.T.S.

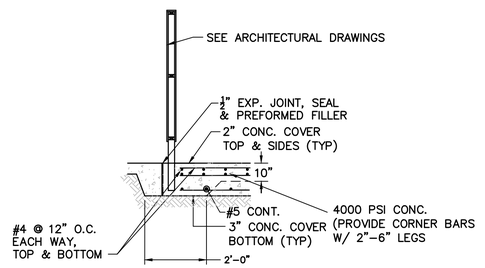

SECTION B
TRASH DUMPSTER GATE
N.T.S.

RELEASE FOR BID

AVCON
TRANSFORMING TODAYS IDEAS INTO TOMORROW'S REALITY

JOHN R. COLLINS
FL LICENSE NO.: 75419
FBPR CERTIFICATE OF AUTHORIZATION NO. 5057

NO.	DATE	REVISION	BY

MISCELLANEOUS DETAILS (2 OF 2)

RELEASE FOR BID

AIRPORT TERMINAL AND HANGAR DEVELOPMENT
PREPARED FOR
DEFUNIAK SPRINGS MUNICIPAL AIRPORT

DESIGNED BY:	J.C.
DRAWN BY:	D.F.
CHECKED BY:	T.N.
APPROVED BY:	V.L.
PROJECT NO:	2019.028.01
DATE:	NOVEMBER 2021

SHEET NUMBER
C-19

THIS DOCUMENT CONTAINS PRIVILEGED AND PROPRIETARY INFORMATION, ALL OF WHICH IS EXPRESSLY PROVIDED BY AVCON, INC., FOR USE BY THE INTENDED RECIPIENT, AND FOR A SPECIFIC PURPOSE. WITHOUT THE EXPRESS WRITTEN CONSENT OF AVCON, INC., ANY DISTRIBUTION, REPRODUCTION, OR OTHER USE OF THIS DOCUMENT, IN WHOLE OR IN PART, IS STRICTLY PROHIBITED

N:\NCIVILLE_PROJECTS\028_DEFUNIAK_AIRPORT\2019.028.01 – TERMINAL DEVELOPMENT\000 CAD\100801 MISC DETAILS.DWG, 1/18/2022 9:06 AM

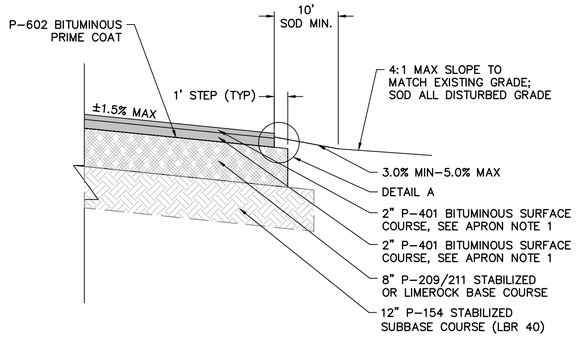

TYPICAL APRON SECTION

N.T.S.

APRON NOTES:

1. CONTRACTOR SHALL SUBMIT ELECTRONIC SURVEY DATA FOR THE FOLLOWING – INTERMEDIATE SURFACE; AND FINAL SURFACE.
2. FINAL SURFACE COURSE = 2" (FAA P-401 WITH 76-22 BINDER FINAL SURFACE)

   FIRST LIFT THICKNESS = 2" (FAA P-401 WITH 76-22 BINDER INTERMEDIATE SURFACE)
3. FINAL LIFT OF ASPHALT SHALL BE PLACED AT A UNIFORM THICKNESS. (SEE MIN./MAX. IN NOTE 2 ABOVE).

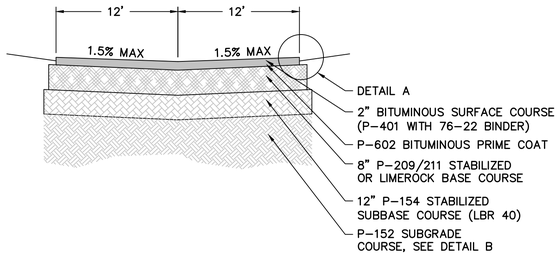

TYPICAL PARKING LOT SECTION

N.T.S.

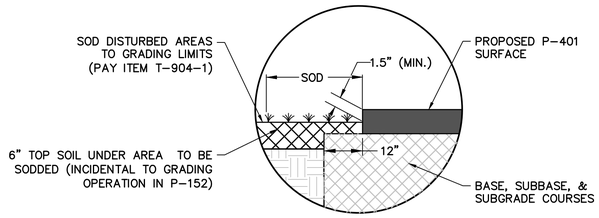

DETAIL A - PAVEMENT DROP-OFF

N.T.S.

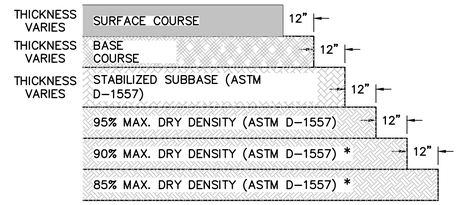

NATURAL DENSITY

* MINIMUM COMPACTION AT LEAST 95% OF MODIFIED PROCTOR MAX. DENSITY (ASTM D-1557) REQUIRED FOR ALL BACKFILLED MATERIALS BENEATH PAVEMENT.

DETAIL B - SUBGRADE COMPACTION

N.T.S.

RELEASE FOR BID

AVCON
TRANSFORMING TODAY'S IDEAS INTO TOMORROW'S REALITY

JOHN R. COLLINS
FL LICENSE NO.: 75419
FBPR CERTIFICATE OF AUTHORIZATION NO. 5057

NO.	DATE	REVISION	BY

AIRFIELD TYPICAL PAVEMENT SECTIONS

RELEASE FOR BID

AIRPORT TERMINAL AND HANGAR DEVELOPMENT

PREPARED FOR

DEFUNIAK SPRINGS MUNICIPAL AIRPORT

DESIGNED BY:	J.C.
DRAWN BY:	D.F.
CHECKED BY:	T.N.
APPROVED BY:	V.L.
PROJECT NO:	2019.028.01
DATE:	NOVEMBER 2021

SHEET NUMBER

C-20

THIS DOCUMENT CONTAINS PRIVILEGED AND PROPRIETARY INFORMATION, ALL OF WHICH IS EXPRESSLY PROVIDED BY AVCON, INC., FOR USE BY THE INTENDED RECIPIENT, AND FOR A SPECIFIC PURPOSE. WITHOUT THE EXPRESS WRITTEN CONSENT OF AVCON, INC. ANY DISTRIBUTION, REPRODUCTION, OR OTHER USE OF THIS DOCUMENT, IN WHOLE OR IN PART, IS STRICTLY PROHIBITED

N:\NICEVILLE_PROJECTS\028_DEFUNIAK_AIRPORT\2019.0028.01 – TERMINAL DEVELOPMENT\000_CAD\1902801_COVER.DWG 1/18/2022 9:06 AM

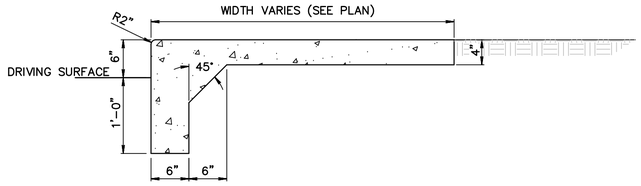

INTERGRAL CURB & SIDEWALK DETAIL

N.T.S.

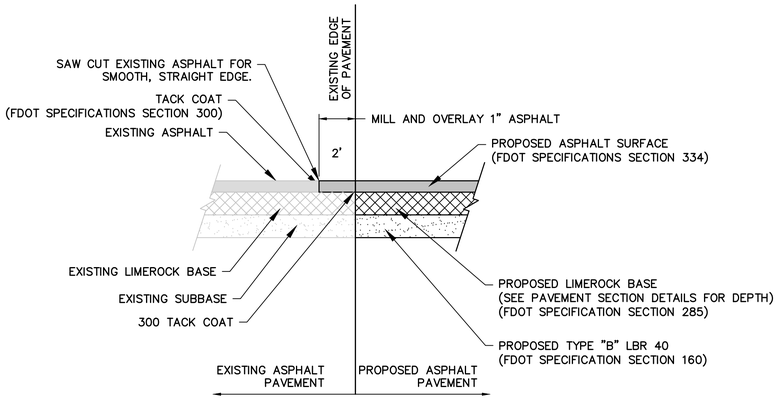

ASPHALT/ASPHALT PAVEMENT BUTT JOINT DETAIL

N.T.S.

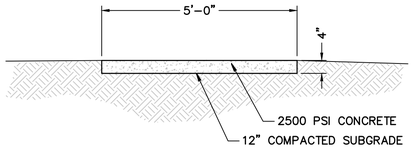

TYPICAL SIDEWALK SECTION

N.T.S.

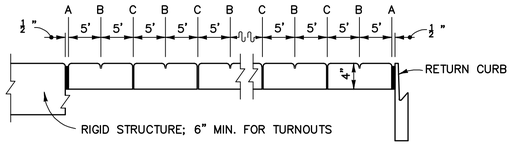

OPEN JOINTS

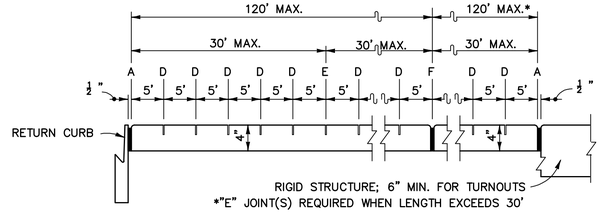

SAWED JOINTS

LONGITUDINAL SECTION

CONCRETE SIDEWALK JOINT DETAIL

N.T.S. – FDOT STANDARD PLANS 550–001 LATEST EDITION

LEGEND:

- A– ½" EXPANSION JOINTS (PREFORMED JOINT FILLER) BETWEEN THE SIDEWALK AND: DRIVEWAYS, SIDEWALK–INTERSECTIONS, AND ALL OTHER FIXED OBJECTS (E.G. DRAINAGE INLETS AND UTILITY POLES)
- B– ⅛" DUMMY JOINTS, TOOLED
- C– ⅛" FORMED OPEN JOINTS
- D– 3/16" SAW CUT JOINTS, 1½" DEEP (96 HOUR) MAX. 5' CENTERS
- E– 3/16" SAW CUT JOINTS, 1½" DEEP (WITHIN 12 HOURS) MAX. 30' CENTERS JOINT(S) REQUIRED WHEN LENGTH EXCEEDS 30'
- F– ½" EXPANSION JOINT WHEN RUN OF SIDEWALK EXCEEDS 120' INTERMEDIATE LOCATIONS WHEN CALLED FOR IN THE PLANS OR AT LOCATIONS AS DIRECTED BY THE ENGINEER.
- G– COLD JOINT WITH BOND BREAKER, TOOLED

N:\NICEVILLE_PROJECTS\028_DEFUNIAK_AIRPORT\2019.028.01 – TERMINAL_DEVELOPMENT\000_CAD\190801_COVER.DWG 1/18/2022 9:06 AM

RELEASE FOR BID

AVCON

TRANSFORMING TODAY'S IDEAS INTO TOMORROW'S REALITY

JOHN R. COLLINS
FL LICENSE NO.: 75419
FBPR CERTIFICATE OF AUTHORIZATION NO. 5057

NO.	DATE	REVISION	BY

LANDSIDE TYPICAL PAVEMENT SECTIONS

RELEASE FOR BID

AIRPORT TERMINAL AND HANGAR DEVELOPMENT

PREPARED FOR

DEFUNIAK SPRINGS MUNICIPAL AIRPORT

DESIGNED BY: J.C.
DRAWN BY: D.F.
CHECKED BY: T.N.
APPROVED BY: V.L.
PROJECT NO: 2019.028.01
DATE: NOVEMBER 2021

SHEET NUMBER
C-21

THIS DOCUMENT CONTAINS PRIVILEGED AND PROPRIETARY INFORMATION, ALL OF WHICH IS EXPRESSLY PROVIDED BY AVCON, INC., FOR USE BY THE INTENDED RECIPIENT, AND FOR A SPECIFIC PURPOSE. WITHOUT THE EXPRESS WRITTEN CONSENT OF AVCON, INC. ANY DISTRIBUTION, REPRODUCTION, OR OTHER USE OF THIS DOCUMENT, IN WHOLE OR IN PART, IS STRICTLY PROHIBITED

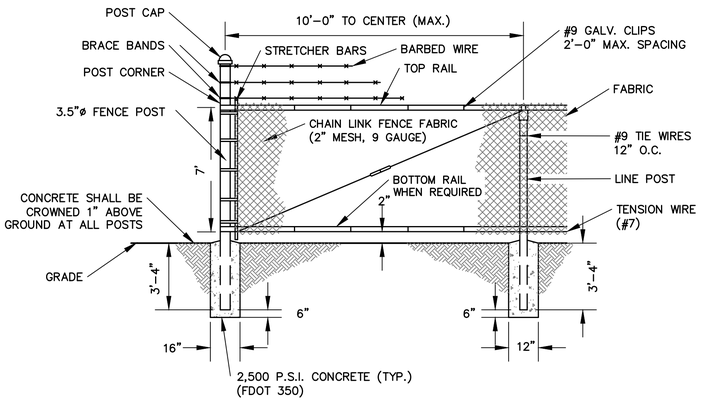

7' WIRE MESH SECURITY FENCE, TYPE II

N.T.S.

NOTE:

1. GALVANIZED STEEL LINE FENCE POST SHALL BE 2.25" IN DIAMETER.
2. GALVANIZED STEEL CORNER, PULL, AND END POSTS SHALL BE 3.5" IN DIAMETER. (PER FEDERAL SPEC. RR-F-191/3E)

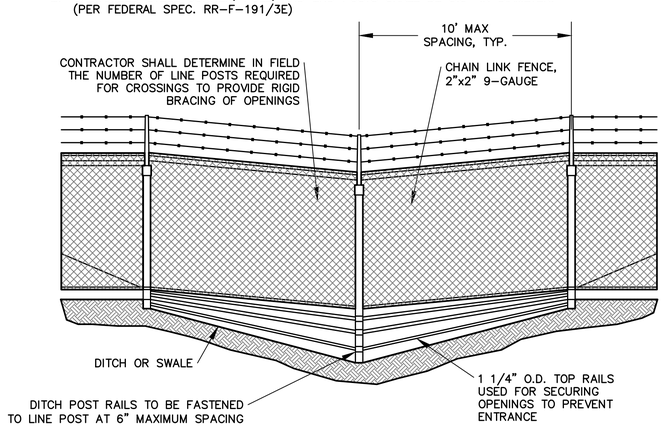

DITCH SPAN

N.T.S.

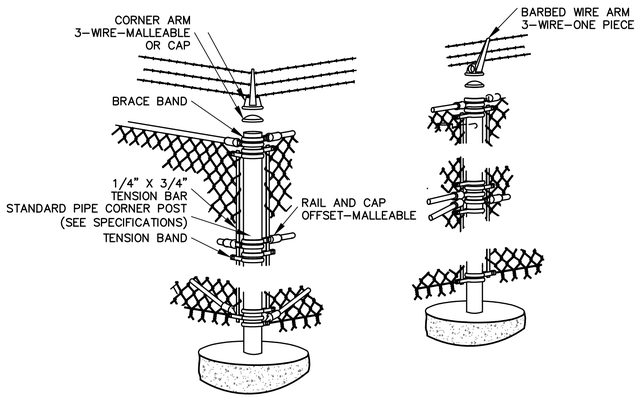

CHAIN LINK FENCE ASSEMBLY

N.T.S.

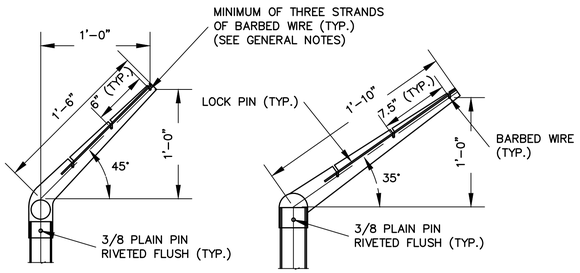

NOTE:

LINE POST — CORNER POST

FENCE POST SHALL BE SET BACK SO BARBED WIRE DOES NOT EXTEND OVER PROPERTY LINES. BARBED WIRE ARMS SHALL BE INSTALLED ON SIDE AWAY FROM AIRPORT PROPERTY OR AIRCRAFT OPERATIONS AREA.

BARBED WIRE EXTENSION ARM DETAILS

N.T.S.

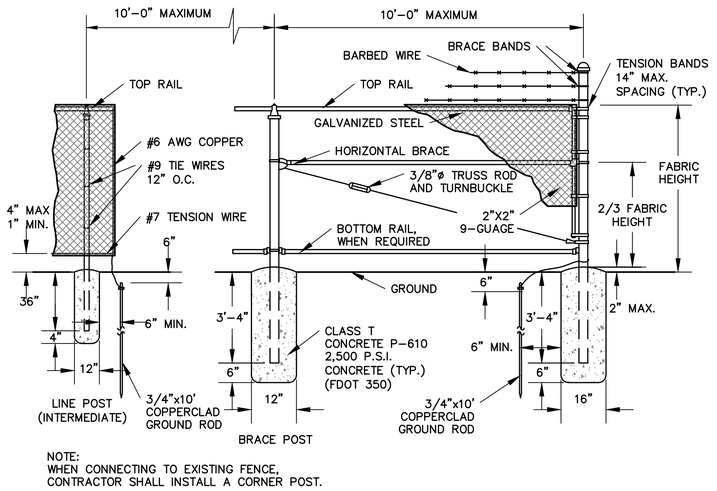

NOTE:
WHEN CONNECTING TO EXISTING FENCE, CONTRACTOR SHALL INSTALL A CORNER POST.

BRACE SECTION CHAIN LINK FENCE

N.T.S.

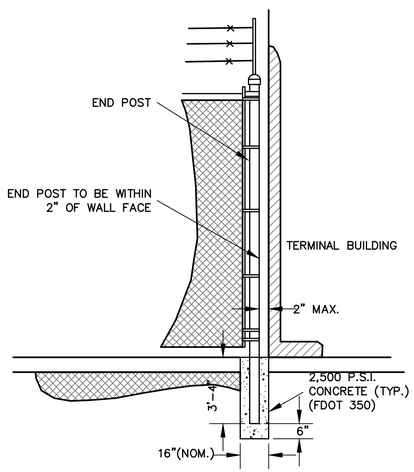

WALL CONNECTION DETAIL

N.T.S.

NOTES:

1. CORE 12" THROUGH FOUNDATION/SLAB IF NECESSARY.
2. PLACE END POST NOT MORE THAN 2" FROM BUILDING PRIOR TO POURING FOOTING.
3. CONTRACTOR TO PATCH PAVEMENT SURFACE TO MATCH SURROUNDING PAVEMENT SURFACE AFTER REMOVAL.

FENCE NOTES:

1. ALL PIPE FRAMEWORK AND OTHER FERROUS MATERIALS SHALL BE HOT GALVANIZED, UNLESS OTHERWISE NOTED.
2. BOTTOM TENSION WIRE SHALL BE STRETCHED TAUT FROM TERMINAL POST TO TERMINAL POST AND SECURELY FASTENED TO EACH INTERMEDIATE POST 6 INCHES ABOVE GROUND LINE AND TO THE FABRIC CHAIN LINK.
3. PULL POSTS SHALL BE INSTALLED AT 500 FOOT INTERVALS ON STRAIGHT RUNS.
4. GATE POST ASSEMBLIES SHALL CONSIST OF A BRACE POST AND CORNER, END, OR PULL POST WITH BRACE AND TRUSS ROD ON EACH SIDE OF THE GATE.
5. CONNECTIONS TO EXISTING FENCES OR BUILDINGS SHALL BE MADE BY SETTING A NEW ANCHOR POST WITH BRACE ASSEMBLY AT JUNCTION POINT.
6. ALL FENCE AND GATES TO BE GROUNDED IN ACCORDANCE WITH THE SPECIFICATIONS.
7. DIMENSIONS: ALL DIMENSIONS, SIZES, GAUGES, WEIGHTS OR THICKNESS' SHOWN ARE THE MINIMUM ACCEPTABLE, UNLESS OTHERWISE INDICATED.
8. SPECIFICATIONS: MATERIALS AND CONSTRUCTION METHODS NOT DETAILED HEREON SHALL BE IN ACCORDANCE WITH THE FAA SPECIFICATION F-162 UNLESS OTHERWISE NOTED ON THE CONTRACT PLANS.
   FAA SPECIFICATIONS SHOWN ARE FROM THE FEDERAL AVIATION ADMINISTRATION STANDARD SPECIFICATIONS FOR CONSTRUCTION OF AIRPORTS.
   THE FEDERAL SPECIFICATION "F-162" SHALL BE INTERPRETED TO MEAN THE LATEST ISSUE OR AMENDMENT OF SUCH SPECIFICATION IN EFFECT ON THE DATE OF PLAN APPROVAL.
9. MEASUREMENTS: FENCES ARE MEASURED IN PLACE, FROM CENTER TO CENTER OF END, CORNER OR GATE POSTS. MEASUREMENT DOES NOT INCLUDE GATE OPENINGS. GATES ARE MEASURED IN UNITS FOR EACH TYPE AND SIZE INSTALLED.
10. FABRIC INSTALLATION: WIRE OR FABRIC ON BOUNDARY AND SECURITY FENCES AND GATES SHALL BE ON THE SIDE OF POSTS AWAY FROM AOA.
11. PVC COATING: (NOT APPLICABLE)
12. CONCRETE: CONCRETE SHALL BE OF A COMMERCIAL GRADE WITH A MINIMUM 28 DAY STRENGTH OF 2500 P.S.I. FOOTING TOPS SHALL BE 1-INCH MINIMUM ABOVE GROUND AT ALL THE POSTS, AND TROWEL FINISHED TO SLOPE AWAY FROM THE POST.
13. OPENINGS UNDER FENCE:
    ANY OPENING UNDER FENCES, WHEREIN THE BOTTOM FENCE WIRE IS MORE THAN 4 INCHES ABOVE GROUND AND THE TOTAL AREA OF OPENING IS 96 SQUARE INCHES OR MORE, SHALL BE CLOSED USING THE DETAIL FOR SPANNING DITCHES OR APPROVED EQUAL.
    OPENINGS LESS THAN 18 INCHES HIGH SHALL BE CLOSED BY INSTALLING ONE OR MORE ADDITIONAL LINE POSTS BETWEEN THE OPENING CENTER AND ADJACENT LINE POSTS AT A 6-INCH MAXIMUM VERTICAL SPACING. THIS WORK SHALL BE INCIDENTAL TO FENCE INSTALLATION COSTS.
14. GROUNDING AND LIGHTNING PROTECTION, CHAIN LINK FENCE ONLY:
    EACH GATE LEAF FRAME SHALL BE CONNECTED TO THE GATE POST BY A BRAIDED, FLEXIBLE COPPER STRAP. EACH GATE POST SHALL BE GROUNDED. GROUND RODS SHALL BE PER SECTION F-162. GROUND CABLE SHALL BE NO. 2 AWG COPPER MINIMUM BARE STRANDED COPPER WIRE. CONNECTIONS TO GATE, FENCE, ETC. ABOVE GROUND SHALL BE MADE WITH SUITABLE NON-CORROSIVE METAL CLAMPS, LUGS OR CONNECTORS. CONNECTIONS TO GROUND RODS SHALL BE MADE BY THE EXOTHERMIC PROCESS. EACH ELEMENT OF THE FENCE SHALL BE GROUNDED. INSTALL GROUND RODS AND BONDING CONDUCTORS IN ACCORDANCE WITH F-162.
15. FENCE LINE AND ALIGNMENT: FENCE LINES SHALL BE CLEARED OF ALL OBSTRUCTIONS AND SMOOTH GRADED TO THE GENERAL CONTOUR OF THE ADJACENT GROUND. STUMPS AND ROOTS NOT INTERFERING WITH FENCE CONSTRUCTION, MAY BE CHIPPED TO GROUND LEVEL. THE FENCE SHALL BE CONSTRUCTED VERTICAL, STRAIGHT AND TRUE TO LINE. THE LONGITUDINAL GRADIENT SHALL PARALLEL TO THE GENERAL SLOPE OF THE GROUND. CONTRACTOR SHALL LAY OUT THE FENCE ALIGNMENT AS SHOWN ON THE CONSTRUCTION PLANS. THE ENGINEER SHALL APPROVE THE ALIGNMENT, LINE AND GRADE OF THE FENCE AND THE GATE LOCATION(S) PRIOR TO CONSTRUCTION.
16. AIRPORT SECURITY FENCES AND GATES SHALL INCLUDE BARB WIRE ATTACHMENT. BARB WIRE ATTACHMENTS SHALL EXTEND IN THE DIRECTION AWAY FROM THE AIRFIELD.
17. THE CAP ARM SHALL BE DESIGNED TO PROVIDE A DRIVE FIT OVER THE TOP OF POSTS AND TO EXCLUDE MOISTURE IN POSTS WITH TUBULAR SECTIONS.
18. GATES SHALL BE INSTALLED PLUMB, LEVEL, AND SECURE, WITH FULL OPENING WITHOUT INTERFERENCE. GROUND-SET ITEMS SHALL BE INSTALLED IN CONCRETE FOR ANCHORAGE. HARDWARE SHALL BE ADJUSTED FOR SMOOTH OPERATION.
19. PERIMETER GATE FRAMES SHALL BE FABRICATED OR TUBULAR MEMBERS. ADDITIONAL HORIZONTAL AND VERTICAL MEMBERS SHALL BE PROVIDED AS REQUIRED TO ENSURE PROPER GATE OPERATION AND FOR ATTACHMENT OF FABRIC AND HARDWARE. SIZES OF FRAME MEMBERS LISTED ARE MINIMUM; LARGER SIZES SHALL BE PROVIDED AS REQUIRED.
20. GATE FRAME ASSEMBLY SHALL BE WELDED OR ASSEMBLED WITH SPECIAL MALLEABLE OR PRESSED STEEL FITTINGS AND RIVETS TO PROVIDE RIGID CONNECTIONS. FABRIC SHALL BE INSTALLED WITH STRETCHER BARS AT VERTICAL EDGES. STRETCHER BARS MAY ALSO BE USED AT THE TOP AND BOTTOM EDGES. STRETCHER BARS AND FABRIC SHALL BE ATTACHED TO GATE FRAMES ON ALL SIDES AT INTERVALS NOT EXCEEDING 15 INCHES. HARDWARE SHALL BE ATTACHED WITH RIVETS OR BY OTHER MEANS THAT WILL PROVIDE EQUAL SECURITY AGAINST BREAKAGE OR REMOVAL.
21. WHERE BARBED WIRE IS INDICATED ABOVE GATES, THE END MEMBERS OF GATE FRAMES SHALL BE EXTENDED APPROXIMATELY ONE (1) FOOT ABOVE THE TOP MEMBER WITH PROVISION FOR ATTACHING THE WIRE. VERTICAL SUPPORT ARMS SHALL BE PROVIDED AT INTERMEDIATE POINTS, WITH SPACING TO MATCH THE SPACING OF THE LINE POSTS.
22. DIAGONAL CROSS-BRACING SHALL BE PROVIDED, CONSISTING OF 3/8 INCH DIAMETER ADJUSTABLE LENGTH TRUSS RODS ON WELDED GATE FRAMES WHERE NECESSARY TO OBTAIN FRAME RIGIDITY WITHOUT SAG OR TWIST. NON-WELDED GATE FRAMES SHALL HAVE DIAGONAL BRACING.

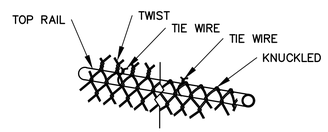

FABRIC SELVAGE

N.T.S.

NOTE:
CONTRACTOR SHALL USE THE KNUCKLED SYSTEM FOR FABRIC SELVAGE.

RELEASE FOR BID

AVCON
TRANSFORMING TODAY'S IDEAS INTO TOMORROW'S REALITY

JOHN R. COLLINS
FL LICENSE NO.: 75419
FBPR CERTIFICATE OF AUTHORIZATION NO. 5057

NO.	DATE	REVISION	BY

FENCE DETAILS SHEET (1 OF 3)

RELEASE FOR BID

AIRPORT TERMINAL AND HANGAR DEVELOPMENT

PREPARED FOR
DEFUNIAK SPRINGS MUNICIPAL AIRPORT

DESIGNED BY:	J.C.
DRAWN BY:	D.F.
CHECKED BY:	T.N.
APPROVED BY:	V.L.
PROJECT NO:	2019.028.01
DATE:	NOVEMBER 2021

SHEET NUMBER
C-22

THIS DOCUMENT CONTAINS PRIVILEGED AND PROPRIETARY INFORMATION, ALL OF WHICH IS EXPRESSLY PROVIDED BY AVCON, INC., FOR USE BY THE INTENDED RECIPIENT, AND FOR A SPECIFIC PURPOSE. WITHOUT THE EXPRESS WRITTEN CONSENT OF AVCON, INC. ANY DISTRIBUTION, REPRODUCTION, OR OTHER USE OF THIS DOCUMENT, IN WHOLE OR IN PART, IS STRICTLY PROHIBITED

M:\NICEVILLE_PROJECTS\028_DEFUNIAK_AIRPORT\2019.028.01 - TERMINAL DEVELOPMENT\000_CADD\[002B01_COVER.DWG 1/18/2022 9:06 AM

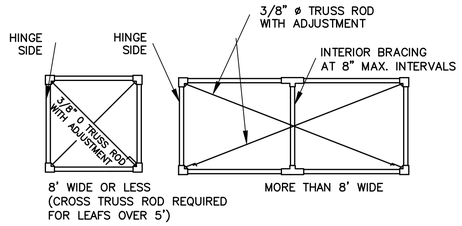

FITTED CONNECTIONS

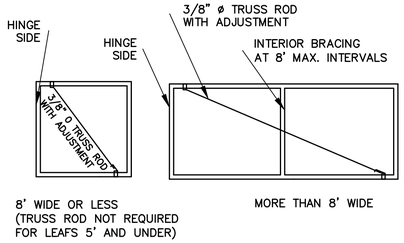

WELDED CONNECTIONS

GATE FRAMES

N.T.S.

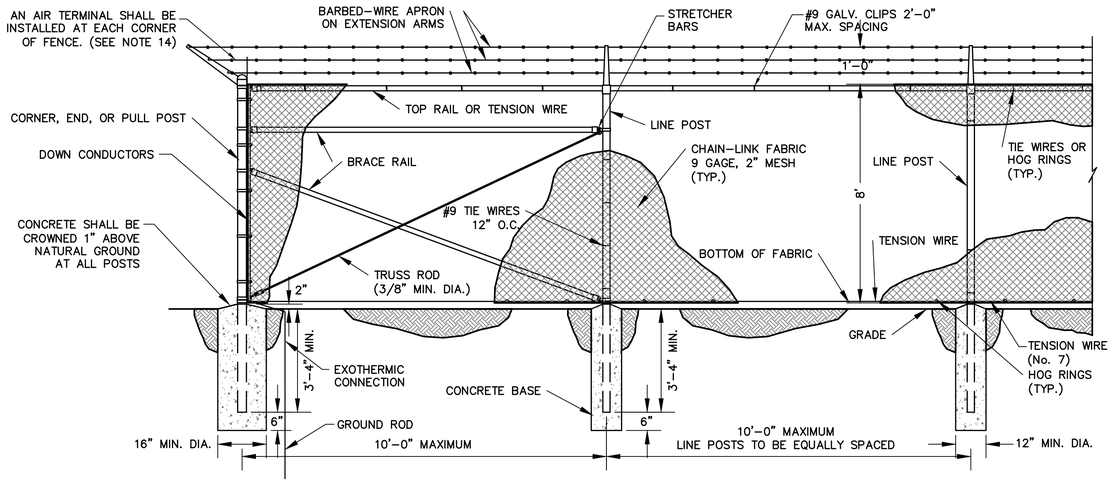

CHAIN LINK SECURITY FENCE

N.T.S.

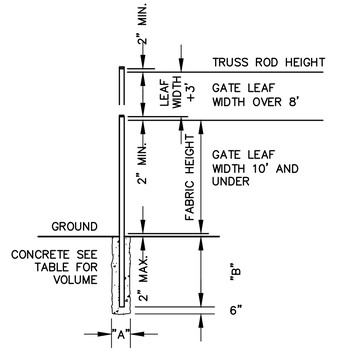

DIMENSIONS	GATE WIDTH (ONE LEAF)			
	6' AND LESS	OVER 6' THROUGH 10'	OVER 10' THROUGH 15'	OVER 15' THROUGH 18'
A	12"	16"	20"	24"
B	48"	56"	62"	68"
C.Y. CONC.	0.13	0.26	0.45	0.70

GATE POST DETAIL

N.T.S.

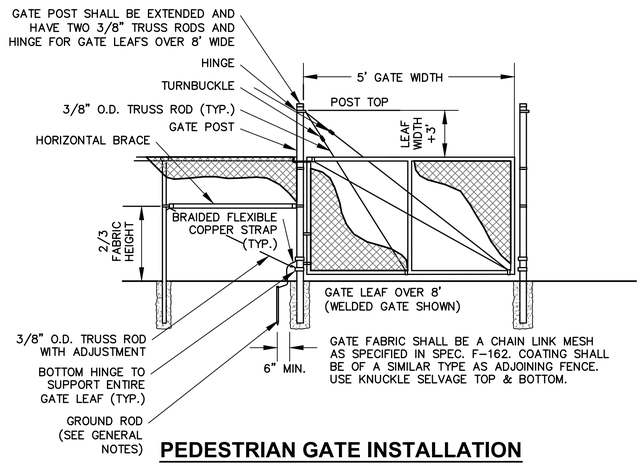

PEDESTRIAN GATE INSTALLATION

N.T.S.

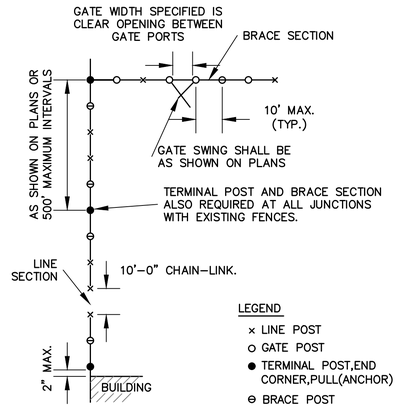

TYPICAL FENCE LAYOUT

N.T.S.

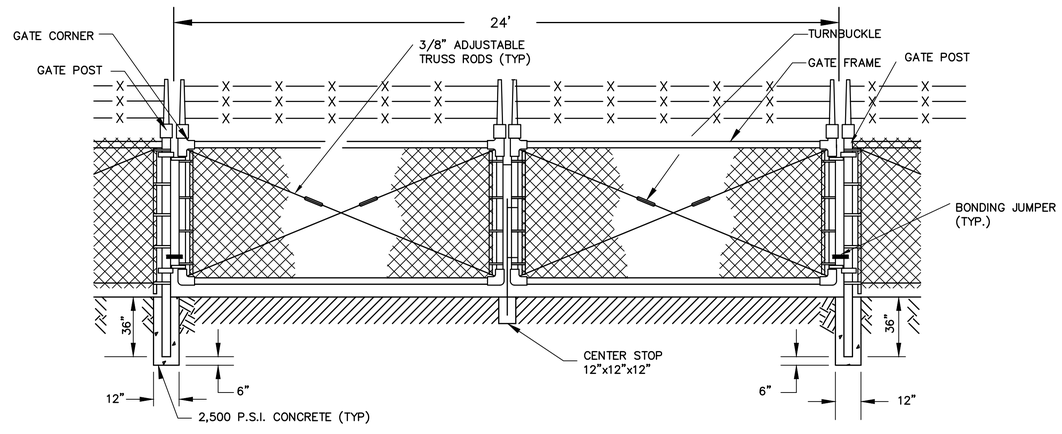

DOUBLE SWING GATE

N.T.S.

RELEASE FOR BID

AVCON

TRANSFORMING TODAY'S IDEAS INTO TOMORROW'S REALITY

JOHN R. COLLINS
FL LICENSE NO.: 75419
FBPR CERTIFICATE OF AUTHORIZATION NO. 5057

NO.	DATE	REVISION	BY

FENCE DETAILS SHEET (2 OF 3)

RELEASE FOR BID

AIRPORT TERMINAL AND HANGAR DEVELOPMENT

PREPARED FOR

DEFUNIAK SPRINGS MUNICIPAL AIRPORT

DESIGNED BY:	J.C.
DRAWN BY:	D.F.
CHECKED BY:	T.N.
APPROVED BY:	V.L.
PROJECT NO:	2019.028.01
DATE:	NOVEMBER 2021

SHEET NUMBER

C-23

THIS DOCUMENT CONTAINS PRIVILEGED AND PROPRIETARY INFORMATION, ALL OF WHICH IS EXPRESSLY PROVIDED BY AVCON, INC. FOR USE BY THE INTENDED RECIPIENT, AND FOR A SPECIFIC PURPOSE. WITHOUT THE EXPRESS WRITTEN CONSENT OF AVCON, INC. ANY DISTRIBUTION, REPRODUCTION, OR OTHER USE OF THIS DOCUMENT, IN WHOLE OR IN PART, IS STRICTLY PROHIBITED

M:\NICEVILLE_PROJECTS\028_DEFUNIAK_AIRPORT\2019.028.01 - TERMINAL DEVELOPMENT\000_CAD\190361_COVER.DWG 1/18/2022 9:06 AM

PHOTOSWITCH ASSEMBLY NOTES:

1. EACH PHOTOSWITCH ASSEMBLY SHALL INCLUDE TWO SUPPORT POSTS AND TWO PROTECTIVE ENCLOSURES. THE SUPPORT POSTS FOR THE GATE OPENING PHOTOSWITCHES SHALL BE 4" SQUARE STRUCTURAL STEEL TUBING, AND THE SUPPORT POSTS FOR THE SAFETY PHOTOSWITCHES SHALL BE 2" STEEL PIPE. THE PROTECTIVE ENCLOSURES SHALL BE 6" WIDE x 6" HIGH x 4" DEEP STEEL BOXES (WITHOUT FRONTS OR FRONT FLANGES, TO ALLOW DRAINING) AND SHALL BE FABRICATED OF 1/8" STEEL. THEY SHALL BE WELDED TO THE SUPPORT POSTS, AND THE ENTIRE ASSEMBLY SHALL BE HOT DIP GALVANIZED AFTER FABRICATION. PAINTING IS NOT REQUIRED.

2. PROVIDE CONDUCTORS IN CONDUITS AS INSTRUCTED BY PHOTOSWITCH MANUFACTURER. AS A MINIMUM, CONDUCTORS SHALL BE NO. 14 COPPER TYPE THWN, AND SHALL BE COLOR CODED. CONNECT PHOTOSWITCHES TO OPERATE IN ACCORDANCE WITH NOTE 5 SHEET E6. SEE NOTE 3 SHEET E6, REGARDING OPTION TO PROVIDE LOOPS IN LIEU OF OR IN ADDITION TO PHOTOSWITCHES.

GATE FABRICATION NOTES:

1. ALL GATE FRAME MEMBERS, POSTS, AND RAILS TO BE SCH. 40 HOT-DIP GALVANIZED STEEL PIPE, OR HIGH-STRENGTH STEEL TUBING EQUIVALENT TO ALLIED "SS-40."

2. CHAIN-LINK FENCE FABRIC TO BE 9 GA., 2" x 2" MESH, ALUMINIZED STEEL, PVC COATED.

3. THOROUGHLY WIRE-BRUSH ALL WELDED CONNECTIONS AND COAT WITH ZINC-RICH COLD GALVAINIZING SPRAY, "ZRC" OR APPROVED EQUAL.

4. SUBMIT SHOP DRAWINGS AND/OR CERTIFICATIONS FOR ALL ITEMS.

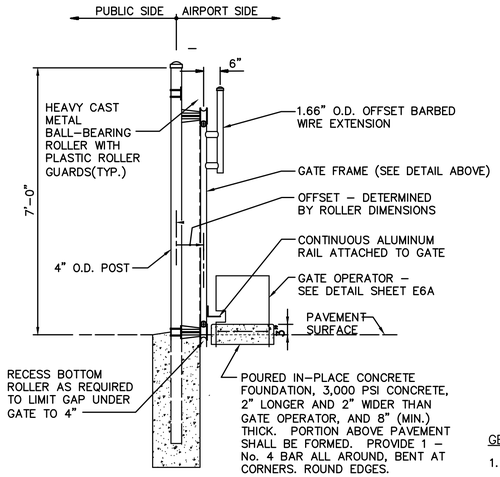

GATE SECTION
N.T.S.

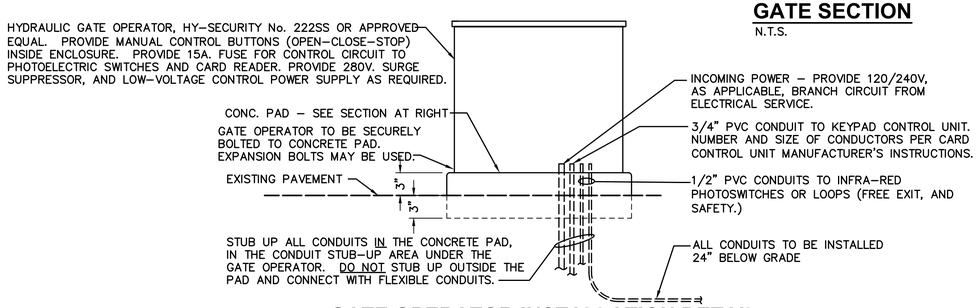

GATE OPERATOR INSTALLATION DETAIL
N.T.S.

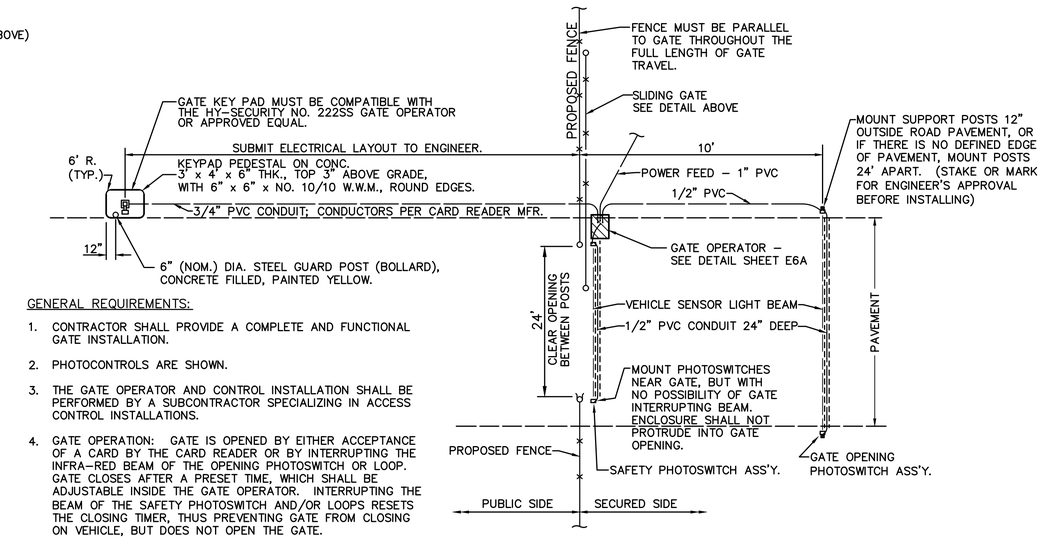

GATE PLAN
N.T.S.

GENERAL REQUIREMENTS:

1. CONTRACTOR SHALL PROVIDE A COMPLETE AND FUNCTIONAL GATE INSTALLATION.

2. PHOTOCONTROLS ARE SHOWN.

3. THE GATE OPERATOR AND CONTROL INSTALLATION SHALL BE PERFORMED BY A SUBCONTRACTOR SPECIALIZING IN ACCESS CONTROL INSTALLATIONS.

4. GATE OPERATION: GATE IS OPENED BY EITHER ACCEPTANCE OF A CARD BY THE CARD READER OR BY INTERRUPTING THE INFRA-RED BEAM OF THE OPENING PHOTOSWITCH OR LOOP. GATE CLOSES AFTER A PRESET TIME, WHICH SHALL BE ADJUSTABLE INSIDE THE GATE OPERATOR. INTERRUPTING THE BEAM OF THE SAFETY PHOTOSWITCH AND/OR LOOPS RESETS THE CLOSING TIMER, THUS PREVENTING GATE FROM CLOSING ON VEHICLE, BUT DOES NOT OPEN THE GATE.

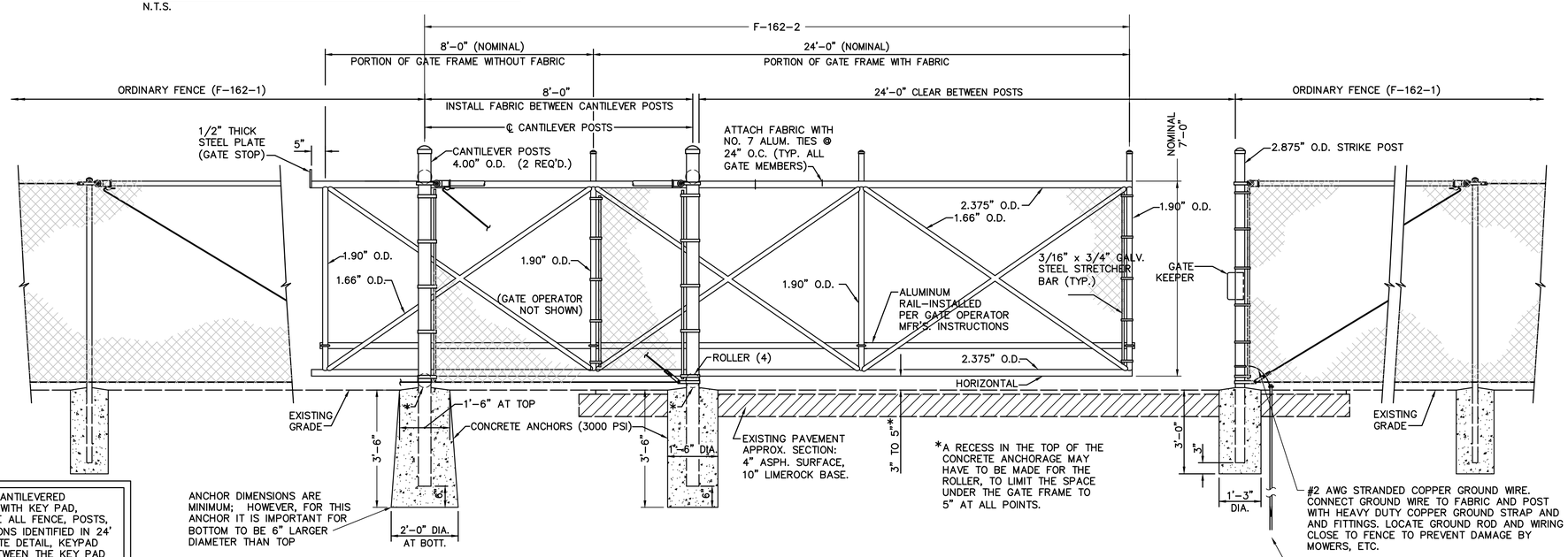

PAY ITEM F-162-1. 24' CANTILEVERED AUTOMATIC SLIDING GATE WITH KEY PAD, COMPLETE, SHALL INCLUDE ALL FENCE, POSTS, AND CONCRETE FOUNDATIONS IDENTIFIED IN 24' CANTILEVERED SLIDING GATE DETAIL, KEYPAD AND COMMUNICATIONS BETWEEN THE KEY PAD AND GATE OPERATOR, GATE OPERATOR WITH CONCRETE FOUNDATION, BOLLARD, SAFETY PHOTO SWITCH, CONDUIT AND POWER TO GATE OPERATOR, GATE OPENING, PHOTO SWITCH ASSEMBLY, AND ANY OTHER ITEMS REQUIRED TO PROVIDE FULLY FUNCTIONAL AUTOMATIC GATE.

24' CANTILEVERED SLIDING GATE DETAIL
N.T.S.

RELEASE FOR BID

N:\NIKOLAI\LE_PROJECTS\ 028 - DEFUNIAK AIRPORT\ 2019.028.01 - TERMINAL DEVELOPMENT\000 CAD\ 190201 - COVER.DWG 1/18/2022 9:06 AM

AVCON
TRANSFORMING TODAY'S IDEAS INTO TOMORROW'S REALITY

JOHN R. COLLINS
FL LICENSE NO.: 75419
FBPR CERTIFICATE OF AUTHORIZATION NO. 5057

NO.	DATE	REVISION	BY

FENCE DETAILS SHEET (3 OF 3)

RELEASE FOR BID

AIRPORT TERMINAL AND HANGAR DEVELOPMENT

PREPARED FOR
DEFUNIAK SPRINGS MUNICIPAL AIRPORT

DESIGNED BY:	J.C.
DRAWN BY:	D.F.
CHECKED BY:	T.N.
APPROVED BY:	V.L.
PROJECT NO:	2019.028.01
DATE:	NOVEMBER 2021

SHEET NUMBER
C-24

THIS DOCUMENT CONTAINS PRIVILEGED AND PROPRIETARY INFORMATION, ALL OF WHICH IS EXPRESSLY PROVIDED BY AVCON, INC., FOR USE BY THE INTENDED RECIPIENT, AND FOR A SPECIFIC PURPOSE. WITHOUT THE EXPRESS WRITTEN CONSENT OF AVCON, INC. ANY DISTRIBUTION, REPRODUCTION, OR OTHER USE OF THIS DOCUMENT, IN WHOLE OR IN PART, IS STRICTLY PROHIBITED

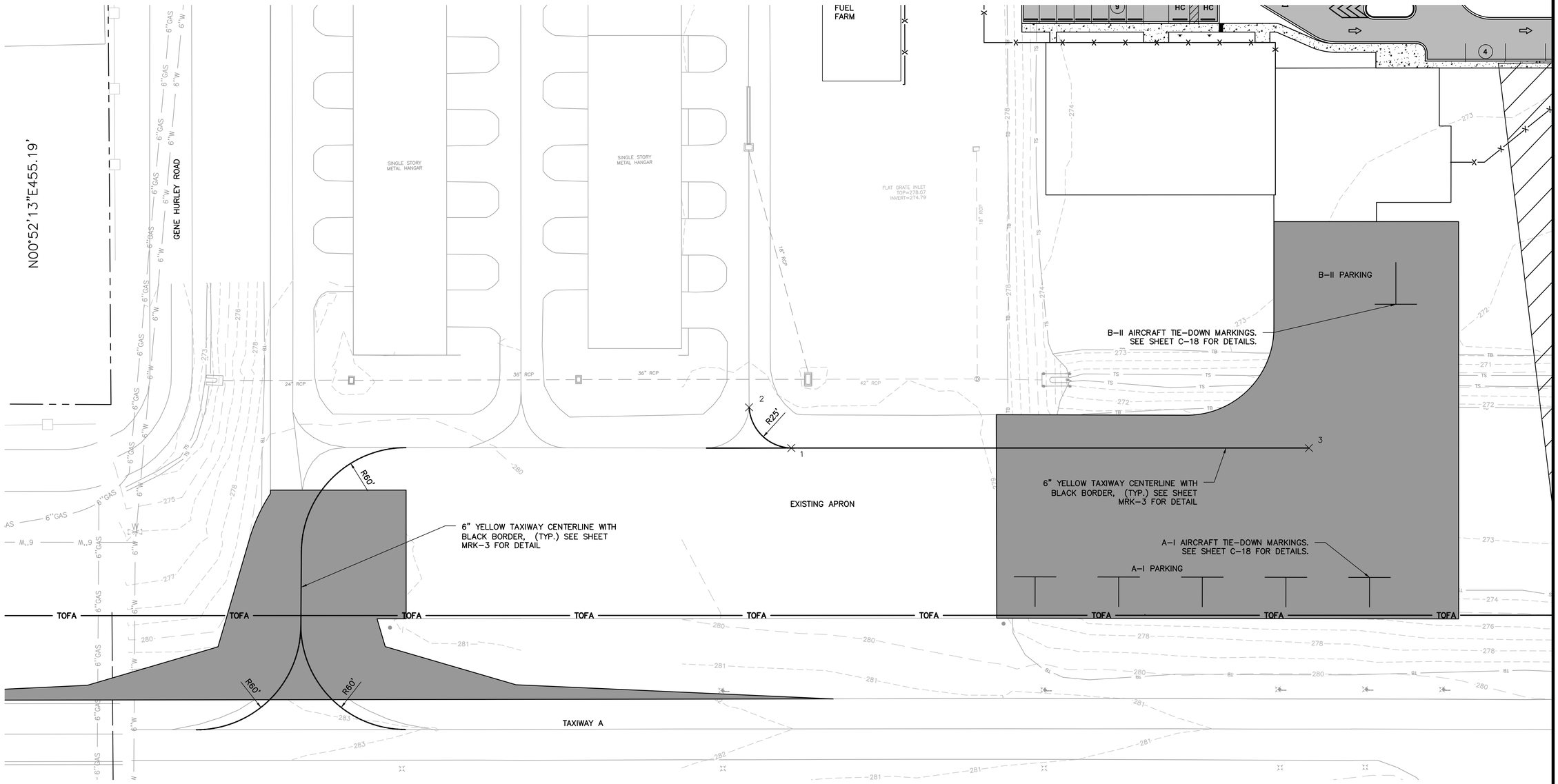

Point Table		
POINT #	NORTHING	EASTING
1	634297.94	1448444.04
2	634321.82	1448420.36
3	634291.36	1448741.18

North

0 15 30 60

GRAPHIC SCALE IN FEET

NOTES:

1. ALL POINTS ARE FOR CENTER OF SINGLE YELLOW OR WHITE LINES OR MIDPOINT BETWEEN WHITE AND YELLOW LINES FOR DOUBLE LINES UNLESS OTHERWISE NOTED.
2. SEE SHEET MRK-3 FOR MARKING DETAILS.

LEGEND

PROPOSED MARKINGS

RELEASE FOR BID

AVCON

TRANSFORMING TODAY'S IDEAS INTO TOMORROW'S REALITY

JOHN R. COLLINS
FL LICENSE NO.: 75419
FBPR CERTIFICATE OF AUTHORIZATION NO. 5057

NO.	DATE	REVISION	BY

AIRFIELD MARKING PLAN

RELEASE FOR BID

AIRPORT TERMINAL AND HANGAR DEVELOPMENT

PREPARED FOR

DEFUNIAK SPRINGS MUNICIPAL AIRPORT

DESIGNED BY:	J.C.
DRAWN BY:	D.F.
CHECKED BY:	T.N.
APPROVED BY:	V.L.
PROJECT NO:	2019.028.01
DATE:	NOVEMBER 2021

SHEET NUMBER

MRK-1

THIS DOCUMENT CONTAINS PRIVILEGED AND PROPRIETARY INFORMATION, ALL OF WHICH IS EXPRESSLY PROVIDED BY AVCON, INC., FOR USE BY THE INTENDED RECIPIENT, AND FOR A SPECIFIC PURPOSE. WITHOUT THE EXPRESS WRITTEN CONSENT OF AVCON, INC. ANY DISTRIBUTION, REPRODUCTION, OR OTHER USE OF THIS DOCUMENT, IN WHOLE OR IN PART, IS STRICTLY PROHIBITED

N:\NICEVILLE_PROJECTS\028_DEFUNIAK_AIRPORT\2019.028.01 — TERMINAL DEVELOPMENT\000_CAD\190801_MRK_PLAN.DWG 1/18/2022 9:07 AM

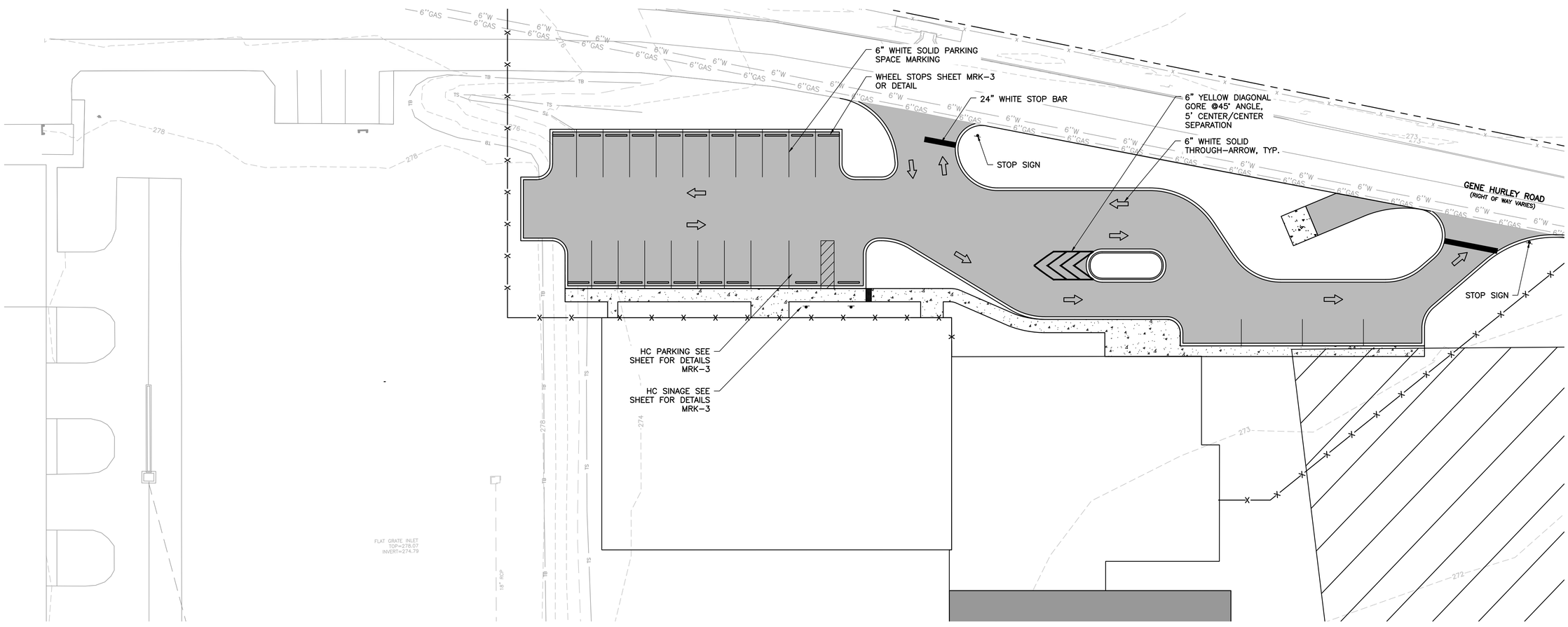

NOTES:

1. ALL POINTS ARE FOR CENTER OF SINGLE YELLOW OR WHITE LINES OR MIDPOINT BETWEEN WHITE AND YELLOW LINES FOR DOUBLE LINES UNLESS OTHERWISE NOTED.
2. SEE SHEET MRK-3 FOR MARKING DETAILS.

RELEASE FOR BID

AVCON

TRANSFORMING TODAY'S IDEAS INTO TOMORROW'S REALITY

JOHN R. COLLINS
FL LICENSE NO.: 75419
FBPR CERTIFICATE OF AUTHORIZATION NO. 5057

NO.	DATE	REVISION	BY

LANDSIDE MARKING PLAN

RELEASE FOR BID

AIRPORT TERMINAL AND HANGAR DEVELOPMENT

PREPARED FOR

DEFUNIAK SPRINGS MUNICIPAL AIRPORT

DESIGNED BY:	J.C.
DRAWN BY:	D.F.
CHECKED BY:	T.N.
APPROVED BY:	V.L.
PROJECT NO:	2019.028.01
DATE:	NOVEMBER 2021

SHEET NUMBER
MRK-2

THIS DOCUMENT CONTAINS PRIVILEGED AND PROPRIETARY INFORMATION, ALL OF WHICH IS EXPRESSLY PROVIDED BY AVCON, INC., FOR USE BY THE INTENDED RECIPIENT, AND FOR A SPECIFIC PURPOSE. WITHOUT THE EXPRESS WRITTEN CONSENT OF AVCON, INC. ANY DISTRIBUTION, REPRODUCTION, OR OTHER USE OF THIS DOCUMENT, IN WHOLE OR IN PART, IS STRICTLY PROHIBITED

N:\NICEVILLE_PROJECTS\028_DEFUNIAK_AIRPORT\2019.028.01 - TERMINAL DEVELOPMENT\000_CAD\190280\1_MRK_PLAN.DWG, 1/18/2022 9:07 AM

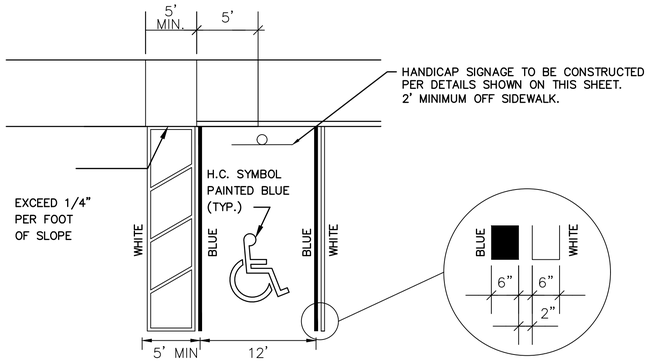

SEE CODE 6.04.051

TYPICAL HANDICAPPED STRIPING AND RAMP DETAIL

N.T.S.

NOTES:

1. EACH SUCH PARKING SPACE SHALL BE CONSPICUOUSLY OUTLINED IN BLUE PAINT OR THERMOPLASTIC, AND SHALL BE POSTED AND MAINTAINED WITH A PERMANENT, ABOVE GRADE SIGN BEARING THE INTERNATIONAL SYMBOL OF ACCESSIBILITY, OR THE CAPTION "PARKING BY DISABLED PERMIT ONLY." OR BEARING BOTH SUCH SYMBOL AND CAPTION. SUCH SIGNS SHALL NOT BE OBSCURED BY A VEHICLE PARKED IN THE SPACE. ALL HANDICAPPED PARKING SPACES MUST BE SIGNED AND MARKED IN ACCORDANCE WITH THE STANDARDS ADOPTED BY THE DEPARTMENT OF TRANSPORTATION.

2. FDOT RECOMMENDS MEASURING PARKING SPACE WIDTH FROM CENTER TO CENTER BETWEEN BLUE STRIPES.

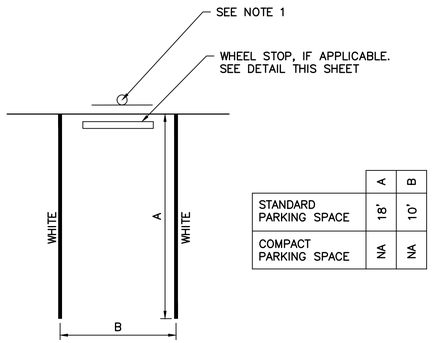

	A	B
STANDARD PARKING SPACE	18'	10'
COMPACT PARKING SPACE	NA	NA

NOTES:

1. EACH COMPACT–SIZE PARKING SPACE SHALL BE CLEARLY DESIGNATED BY EITHER PAVEMENT MARKING "COMPACT" OR SIGNS STATING "PARKING FOR COMPACT VEHICLES ONLY."

2. ALL PAVEMENT MARKINGS SHALL CONFORM TO FDOT STANDARD PLANS 711–001.

TYPICAL PARKING STRIPING DETAIL

N.T.S.

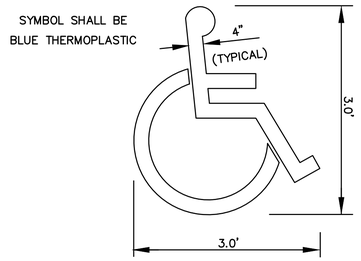

ACCESSIBLE PARKING SYMBOL

N.T.S.

NOTE:
1. EACH SUCH PARKING SPACE SHALL BE CONSPICUOUSLY OUTLINED IN BLUE PAINT. AND SHALL BE POSTED AND MAINTAINED WITH A PERMANENT, ABOVE GRADE SIGN.

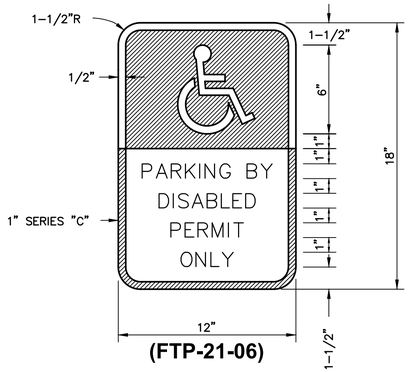

(FTP-21-06)

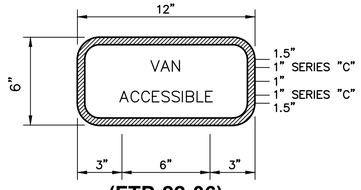

(FTP-22-06)

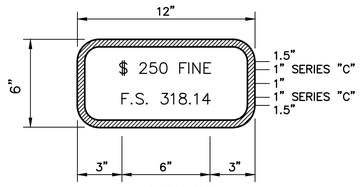

(FTP-22-06)

NOTES:

HEIGHT OF SIGNAGE REQUIREMENTS ARE 60" TO BOTTOM OF SIGN

VAN ACCESSIBLE SIGN DETAIL

(FDOT STANDARD PLANS NO. 700–010 AND 700–101)
N.T.S.

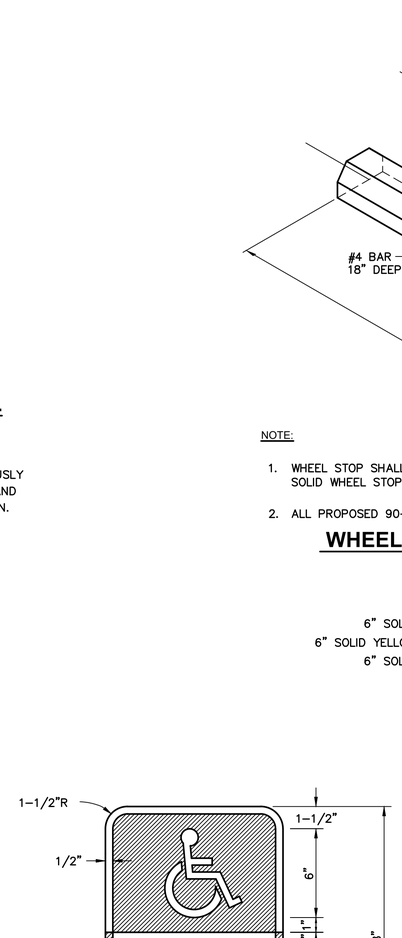

(FTP-21-06)

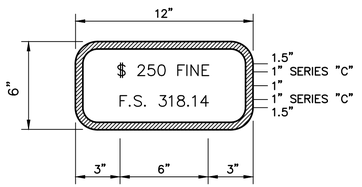

(FTP-22-06)

NOTES:

HEIGHT OF SIGNAGE REQUIREMENTS ARE 60" TO BOTTOM OF SIGN

HANDICAP SIGN DETAIL

(FDOT STANDARD PLANS NO. 700–010 AND 700–101)
N.T.S.

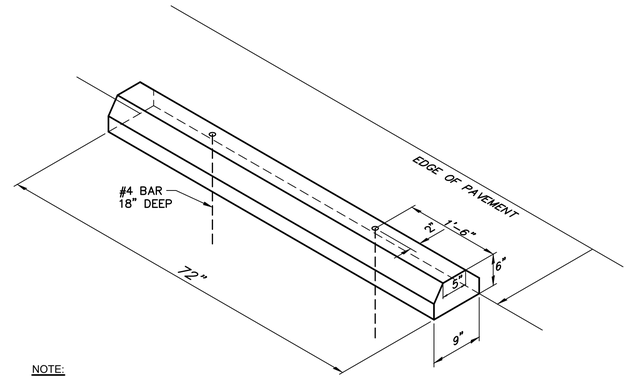

NOTE:

1. WHEEL STOP SHALL BE BARCO PRODUCTS, MODEL # WHLSTP, YELLOW, 6" SOLID WHEEL STOP, 72"X6"X4", OR APPROVED EQUAL.

2. ALL PROPOSED 90–DEGREE PARKING SPACES REQUIRE WHEEL STOPS.

WHEEL STOP (RECYCLABLE MATERIALS)

N.T.S.

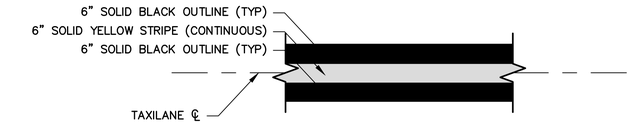

TAXILANE CENTERLINE DETAIL

N.T.S

NOTES:

1. YELLOW CENTERLINE MARKING SHALL CONTAIN TYPE III REFLECTIVE MEDIA AND SHALL MEET FAA STANDARD SPECIFICATION P–620.

2. LACK OUTLINE MARKINGS SHALL NOT CONTAIN REFLECTIVE MEDIA.

AVCON

TRANSFORMING TODAY'S IDEAS INTO TOMORROW'S REALITY

JOHN R. COLLINS
FL LICENSE NO.: 75419
FBPR CERTIFICATE OF AUTHORIZATION NO. 5057

NO.	DATE	REVISION	BY

LANDSIDE MARKING DETAILS

RELEASE FOR BID

AIRPORT TERMINAL AND HANGAR DEVELOPMENT

PREPARED FOR

DEFUNIAK SPRINGS MUNICIPAL AIRPORT

DESIGNED BY:	J.C.
DRAWN BY:	D.F.
CHECKED BY:	T.N.
APPROVED BY:	V.L.
PROJECT NO:	2019.028.01
DATE:	NOVEMBER 2021

SHEET NUMBER
MRK-3

THIS DOCUMENT CONTAINS PRIVILEGED AND PROPRIETARY INFORMATION, ALL OF WHICH IS EXPRESSLY PROVIDED BY AVCON, INC., FOR USE BY THE INTENDED RECIPIENT, AND FOR A SPECIFIC PURPOSE. WITHOUT THE EXPRESS WRITTEN CONSENT OF AVCON, INC., ANY DISTRIBUTION, REPRODUCTION, OR OTHER USE OF THIS DOCUMENT, IN WHOLE OR IN PART, IS STRICTLY PROHIBITED

RELEASE FOR BID

N:\NICEVILLE_PROJECTS\2019_028_DEFUNIAK_AIRPORT\2019.028.01 – TERMINAL DEVELOPMENT\000_CAD\190801_MRK_PLAN.DWG 1/18/2022 9:07 AM

NOTES:

1. PROJECT PAY ITEMS: THE PROJECT PAY ITEMS ARE PROVIDED TO BE INCLUSIVE OF ALL WORK TO BE PERFORMED AS SHOWN IN THE CONTRACT DOCUMENTS. ALL WORK NOT IDENTIFIED WITH A SPECIFIC PAY ITEM SHALL BE CONSIDERED REQUIRED WORK TO COMPLETE THE PROJECT, AND SHALL BE CONSIDERED SUBSIDIARY TO THE COST OF PROJECT PAY ITEMS PROVIDED.

2. WHENEVER, IN THE CONTRACT DOCUMENTS, THE WORDS "PROVIDE", "FURNISH", "INSTALL", "FURNISH AND INSTALL", OR OTHER WORDS OF LIKE IMPORT ARE USED, IT SHALL BE UNDERSTOOD THAT THE INTENT OF THE CONTRACT DOCUMENTS IS TO PROVIDE FOR THE CONSTRUCTION AND COMPLETION IN EVERY DETAIL OF THE WORK DESCRIBED. IT IS FURTHER INTENDED THAT THE CONTRACTOR SHALL FURNISH ALL LABOR, SUPERVISION, MATERIALS, EQUIPMENT, TOOLS, TRANSPORTATION, SUPPLIES, TESTING AND INCIDENTALS REQUIRED TO COMPLETE THE WORK IN ACCORDANCE WITH THE DRAWINGS (PLANS), SPECIFICATIONS AND TERMS OF THE CONTRACT.

3. THE CONTRACTOR SHALL OBTAIN AND PAY FOR ALL REQUIRED PERMITS, LICENSES, ETC., PRIOR TO COMMENCEMENT OF WORK. THE COST OF PERMITS, LICENSES, ETC., SHALL BE INCIDENTAL TO AND INCLUDED IN THE BID PRICE FOR THE RESPECTIVE PAY ITEMS. PROVIDE AND PAY FOR ALL PERMITS, LICENSES, FEES AND INSPECTIONS REQUIRED FOR THE PERFORMANCE OF THE WORK. THE CONTRACTOR SHALL PAY ALL SALES, CONSUMER, USE AND OTHER TAXES REQUIRED IN ACCORDANCE WITH THE LAW OF THE PLACE OF THE PROJECT. THE CONTRACTOR SHALL BE RESPONSIBLE TO OBTAIN AND PAY FOR ALL REQUIRED LICENSES, FEES AND INSPECTIONS INCLUDING METER INSTALLATION FEE. THE COST FOR SUCH SHALL BE INCLUDED IN THE BID PRICE. IT IS THE CONTRACTOR'S RESPONSIBILITY TO CONTACT THE APPLICABLE UTILITY COMPANY(S) TO DETERMINE IF ANY FEES, CHARGES OR COSTS WILL BE DUE THE UTILITY COMPANY(S) AS REQUIRED BY THE UTILITY COMPANY(S) FOR TEMPORARY POWER, INSTALLATIONS, HOOK-UPS, ETC. THIS FEE, CHARGE OR COST SHALL BE INCLUDED IN THIS CONTRACTOR'S PRICE.

4. ITEMS SHOWN IN SCREEN (HALFTONE) ARE EXISTING OR CIVIL ITEMS. ITEMS SHOWN IN SOLID (BOLD) ARE NEW TO BE INSTALLED UNDER THIS CONTRACT, UNLESS OTHERWISE NOTED.

5. ANY EXCAVATION WITHIN 5 FEET OF ALL EXISTING UNDERGROUND UTILITIES SHALL BE PERFORMED BY HAND EXCAVATION METHODS. EXISTING DIRECT BURIED CABLES TO REMAIN SHALL BE ENCLOSED IN SPLIT DUCT AND ENCASED IN A 3" ENVELOPE OF P-610 CONCRETE UNDER THE FOLLOWING CONDITIONS: (SEE DETAIL SHEETS)

   A. WHEN WITHIN 20 FEET OF EXCAVATION, TRENCHING, ETC.
   B. WHEN PAVEMENT WIDENING OR EXTENSIONS WILL BE ROUTED OVER THE EXISTING CABLE. THE SPLIT DUCT WILL EXTEND 20 FEET BEYOND THE NEW EDGE OF PAVEMENT.
   C. WHEN ENCOUNTERED DURING CONSTRUCTION.
   D. WHEN SUBJECT TO DAMAGE, IN THE OPINION OF THE ENGINEER FROM CONSTRUCTION ACTIVITIES.

   AN END OF DUCT MARKER SHALL BE INSTALLED ABOVE EACH END OF THE DUCT. ALL DAMAGE TO UTILITIES OR EXISTING STRUCTURES SHALL BE IMMEDIATELY REPORTED TO THE ENGINEER. THE ENGINEER SHALL DETERMINE WHETHER REPAIR OR REPLACEMENT IS NECESSARY. REFER TO THE SPECIAL PROVISIONS OF THE CONTRACT FOR LIQUIDATED DAMAGES THAT MAY RESULT FROM DAMAGE TO EXISTING UTILITIES OR SYSTEMS. ALL REPAIR METHODS SHALL BE SUBMITTED TO THE ENGINEER FOR REVIEW AND APPROVAL PRIOR TO INITIATING THE WORK. HAND DIGGING AND PROTECTION OF EXISTING SYSTEMS SHALL NOT BE PAID FOR SEPARATELY BUT SHALL BE CONSIDERED INCIDENTAL TO THE ITEM BEING INSTALLED.

6. THE AIRPORTS MAINTENANCE DEPARTMENTS' "LOCK-OUT/TAG-OUT" PROCEDURE AND NFPA 70E SHALL BE COMPLIED WITH BY THIS CONTRACTOR.

7. THIS CONTRACTOR SHALL VERIFY EXISTING CONDITIONS PRIOR TO STARTING WORK.

8. EXISTING CONDUIT, DUCT BANK, CIRCUITING AND UTILITY INFORMATION IS BASED ON AIRPORT "AS-BUILT" AND "RECORD" DRAWINGS, AND SITE VISITS BY THE UTILITIES AND THE ENGINEER. THE EXISTING UTILITY LOCATIONS SHOWN ON THE PLANS ARE APPROXIMATE AND SHALL NOT BE SCALED FOR EXACT LOCATIONS. IT SHALL BE THE RESPONSIBILITY OF THIS CONTRACTOR TO CONTACT THE APPROPRIATE UTILITY/AGENCY, PRIOR TO STARTING WORK, AND STAKE/MARK THE LOCATION OF ALL EXISTING UTILITIES. ANY INTERRUPTION OF AN EXISTING SYSTEM OR UTILITY SERVICE SHALL BE COORDINATED AND APPROVED BY THE AUTHORITY, AGENCY OR UTILITY HAVING JURISDICTION, PRIOR TO STARTING WORK.

9. ALL EXISTING SYSTEMS/UTILITIES TO REMAIN SHALL BE PROTECTED FROM DAMAGE. REPLACEMENT OF ANY DAMAGED EXISTING SYSTEMS/UTILITIES TO REMAIN SHALL BE AT THE CONTRACTORS' EXPENSE. FAA CABLES CANNOT BE SPLICED. DAMAGE TO FAA CABLES WILL RESULT IN THE CONTRACTOR BEING RESPONSIBLE FOR COMPLETE REPLACEMENT OF THE FAA CABLE.

10. ELECTRICAL DEMOLITION WORK SHALL BE LIMITED TO THE AREAS AND SCHEDULES IDENTIFIED IN THE APPROVED CONTRACTOR SUBMITTED PHASING PLAN. CONTRACTOR SHALL MAINTAIN OPERATIONAL STATUS OF RUNWAY – TAXIWAY LIGHTING SYSTEMS UNTIL PERMISSION FROM PROJECT MANAGER IS GRANTED TO DEMOLISH. DEMOLITION SHALL BE PHASED AS REQUIRED TO MAINTAIN AIRPORT OPERATIONS.

11. ALL WORK SHOWN ON THE EXISTING CONDITIONS AND DEMOLITION DRAWINGS IS BASED ON FIELD OBSERVATION OF THE ACTUAL EXISTING CONDITIONS AND ON EXISTING "AS-BUILT" DRAWINGS OF THE AREAS AFFECTED. THEY ARE THEREFORE CONSIDERED TO BE SCHEMATIC. IT IS THE INTENT OF THE DEMOLITION DRAWINGS THAT ALL EQUIPMENT, DEVICES, FIXTURES, WIRING MATERIALS, SYSTEMS AND APPURTENANCES, ETC., WHICH ARE NO LONGER REQUIRED AS A RESULT OF THE PROJECT BE REMOVED.

12. IT SHALL BE THE CONTRACTORS' RESPONSIBILITY TO DETERMINE THAT ALL AIRFIELD LIGHTING CIRCUITS, EXCEPT THOSE THAT ARE SERVING CLOSED TAXIWAYS OR RUNWAYS, ARE COMPLETELY OPERATIONAL, USING TOWER CONTROLS, AT THE END OF EACH WORK SHIFT AND SHALL SO CERTIFY TO THE ENGINEER BEFORE THE END OF EACH SHIFT. THE CONTRACTOR SHALL NOT LEAVE THE WORK SITE UNTIL CIRCUIT OPERATION HAS BEEN CONFIRMED BY THE ENGINEER. TEMPORARY CABLE CONNECTIONS SHALL BE MADE IN AIRFIELD LIGHTING CIRCUITS WHEN PERMANENT WIRING CANNOT BE COMPLETED DURING DAYLIGHT HOURS. ALL RUNWAYS AND TAXIWAYS NOT CLOSED FOR CONSTRUCTION (REFER TO PHASING PLAN) SHALL HAVE FULLY OPERABLE AIRFIELD LIGHTING DURING THE HOURS BETWEEN ONE HOUR BEFORE DUSK AND ONE HOUR AFTER DAWN AND AS REQUIRED BY AIRPORT OPERATIONS. THE CONTRACTOR SHALL DISCUSS THE CONTRACTOR'S PROPOSED WIRING WITH THE ENGINEER AND OBTAIN APPROVAL PRIOR TO COMMENCING WORK IN THAT AREA. ALL ELECTRICAL WIRING SHALL BE COMPLETED AND TESTED ONE (1) HOUR PRIOR TO ELECTRICAL MAINTENANCE DEPARTMENT'S END OF SHIFT.

13. DEWATERING FOR THE INSTALLATION OF MANHOLES, HAND HOLES, JCP, BASE CANS, DUCT BANKS, COUNTERPOISE OR CONDUITS ARE INCIDENTAL TO THE RESPECTIVE PAY ITEM. THE CONTRACTOR SHALL BE RESPONSIBLE TO PAY FOR AND OBTAIN ANY AND ALL PERMITS REQUIRED FOR DEWATERING.

14. LOCATE AND UTILIZE EXISTING DUCTS WHERE SHOWN ON PLANS. MANDREL EXISTING DUCTS TO DETERMINE ACCEPTABILITY FOR USE. THE COST OF MANDRELLING THE EXISTING DUCTS SHALL BE INCIDENTAL TO THE DUCT INSTALLATION PAY ITEM. IF EXISTING DUCTS SHOWN ARE DAMAGED, NONEXISTENT, OR ROUTED DIFFERENTLY, CONTACT THE ENGINEER.

15. INSTALL CABLING IN EXISTING DUCTS AS SHOWN IN THE CONTRACT DOCUMENTS.

16. THE IDENTITY OF ALL CABLES SHOWN ON THE PLANS SHALL BE VERIFIED IN THE FIELD. ANY DISCREPANCY SHALL BE BROUGHT TO THE ATTENTION OF THE ENGINEER AND RECORDED IN THE DRAWINGS TO PROVIDE AN ACCURATE RECORD CONDITION. THE CONTRACTOR SHALL COORDINATE INFORMATION SHOWN ON THE PLAN SHEETS WITH EXISTING RECORD INFORMATION AVAILABLE THROUGH THE AIRPORT MAINTENANCE STAFF. THESE PLANS DO NOT PURPORT TO SHOW ALL EXISTING CABLES/CONCEALED UTILITIES WHICH WILL REQUIRE STAKE OUT PRIOR TO CONSTRUCTION.

17. ALL LOOSE MATERIALS SHALL BE REMOVED FROM ALL EXCAVATIONS FOR ELECTRICAL EQUIPMENT, RACEWAYS, MANHOLES, PADS, ETC. THE BOTTOM OF THE EXCAVATION SHALL BE COMPACTED TO THE FOLLOWING CRITERIA PRIOR TO THE INSTALLATION OF THE ELECTRICAL ITEM AND BACKFILL.

SOIL TYPE	DESIGN AIRCRAFT GROSS WEIGHT	TEST STANDARD	UNDER PAVEMENT	IN TURF
<30% RETAINED ON 3/4" SIEVE	>60,000 LBS	ASTM D1557	100%	95%
<30% RETAINED ON 3/4" SIEVE	≤60,000 LBS	ASTM D698	100%	98%
>30% RETAINED ON 3/4" SIEVE	>60,000 LBS	AASHTO T-180	100%	95%
>30% RETAINED ON 3/4" SIEVE	≤60,000 LBS	AASHO T-99	100%	95%

18. DURING THE DEMOLITION PHASE AND PRIOR TO CONSTRUCTION THE CONTRACTOR SHALL VERIFY THAT FUNCTIONAL RACEWAY EXISTS FROM BASE CAN TO BASE CAN, ETC TO CIRCUIT THE AIRFIELD LIGHTING AS SHOWN ON THE CIRCUITING PLANS. SHOULD ADDITIONAL RACEWAY NEED TO BE INSTALLED THE CONTRACTOR SHALL INSTALL THE RACEWAY PRIOR TO THE PAVING OPERATIONS. THE CONTRACTOR SHALL CERTIFY IN WRITING TO THE OWNER PRIOR TO PAVING OPERATIONS THAT FUNCTIONAL RACEWAY EXISTS AND IS PROPERLY ROUTED TO PROVIDE FOR CIRCUITING IN ACCORDANCE WITH THE CONTRACT DOCUMENTS.

19. THE CONTRACTOR SHALL THOROUGHLY REVIEW THE EXISTING DUCT BANK CONDITIONS. THE CONTRACTOR WILL BE REQUIRED TO INSTALL THE NEW CABLES IN DUCTS WITH EXISTING CABLES. THE CONTRACTOR IS SOLELY RESPONSIBLE FOR THE PROTECTION OF THE EXISTING CABLES. THE CONTRACTOR SHALL BE RESPONSIBLE FOR THE REPAIR OR REPLACEMENT OF CABLES DAMAGED DURING CONSTRUCTION. REPAIR OR COMPLETE REPLACEMENT SHALL BE AT THE ENGINEER'S DISCRETION. THE COST OF REPAIR OR REPLACEMENT SHALL BE AT THE CONTRACTOR'S EXPENSE.

20. THIS CONTRACTOR SHALL COMPLETELY SURVEY AND STAKE OUT EACH AREAS' LIGHTING LAYOUT PRIOR TO STARTING ANY INSTALLATION. SHOULD ANY IRREGULARITIES OCCUR IN THE LIGHTING LAYOUT, THE ENGINEER SHALL BE NOTIFIED IMMEDIATELY. THE BID ITEM PRICE SHALL INCLUDE THE NECESSARY LAYOUT FOR EACH FIXTURE, AND THE COST FOR ANY ADDITIONAL ADJUSTMENT OF THE LOCATION OF THE FIXTURES, DUE TO THE EXISTING GEOMETRIC CONDITIONS. THE NEW LIGHTING INSTALLATION SHALL BE COORDINATED WITH AND BLEND INTO THE EXISTING INSTALLATION.

21. WITHIN THE CONTRACTOR'S WORK SCOPE, REPLACE ALL LIGHT BASE AND JUNCTION CAN BOLTS AND LOCK WASHERS. BOLTING HARDWARE SHALL NOT BE REUSED. REPAIR DAMAGED THREADS IN LIGHT BASES AND JUNCTION CANS UTILIZING THREADED INSERTS AS MANUFACTURED BY OLSEN INDUSTRIES OR USING THE DRILL FIXTURE KIT WITH GARDSERT THREAD REPAIR PROVIDED BY JAQUITH INDUSTRIES OR ACCEPTED EQUIVALENT. CONTRACTOR SHALL TURN OVER THE TOOLS TO THE AIRPORT ONCE THE REPAIRS HAVE BEEN COMPLETED.. APPLY ANTI-SEIZE COMPOUND TO BOLTS AS RECOMMENDED BY FIXTURE/CAN MANUFACTURER.

22. ALL FIXTURES, SIGNS, BASE CANS, ETC., SHALL BE INSTALLED AS SHOWN ON THE CONTRACT DOCUMENTS OR ACCEPTED SHOP DRAWINGS AND IN ACCORDANCE WITH THE APPLICABLE FAA ADVISORY CIRCULARS AND MANUFACTURERS' RECOMMENDATIONS. SURVEY INSTRUMENTS SHALL BE USED TO POSITION ALL ITEMS TO INSURE PRECISE ORIENTATION. TOLERANCES GIVEN IN THE FAA ADVISORY CIRCULARS AND THE CONTRACT DOCUMENTS SHALL NOT BE EXCEEDED. WHERE NO TOLERANCE IS GIVEN, NO DEVIATION IS PERMITTED. ITEMS NOT INSTALLED IN ACCORDANCE WITH THE FAA ADVISORY CIRCULARS AND THE CONTRACT DOCUMENTS SHALL BE REPLACED BY AND AT THE EXPENSE OF THE CONTRACTOR.

23. EACH EXISTING AND PROPOSED BASE CAN SHALL BE CLEANED OF ALL SAND AND DEBRIS.

24. EACH EXISTING AND PROPOSED CONDUIT/DUCT IDENTIFIED FOR THE PROPOSED WORK BE CLEANED AND SWABBED THROUGHOUT ITS ENTIRE LENGTH TO REMOVE ALL SAND AND DEBRIS. THE CONTRACTOR SHALL MANDREL EACH EXISTING AND PROPOSED CONDUIT/DUCT IDENTIFIED FOR THE PROPOSED WORK. AN IRON-SHOD MANDREL, NOT MORE THAN 1/4-INCH SMALLER THAN THE BORE OF THE CONDUIT/DUCT SHALL BE PULLED THROUGH EACH CONDUIT/DUCT. THE MANDREL SHALL HAVE LEATHER OR RUBBER GASKET SLIGHTLY LARGER THAN THE CONDUIT/DUCT BORE.

25. SECURE COVERS ON ALL BASE CANS, MANHOLES ETC. ONCE CONDUIT/DUCT AND BASE CANS HAVE BEEN CLEANED. BASE CANS, MANHOLES ETC. MAY BE OPENED FOR WORK ACTIVITIES BUT SHALL BE CLOSED IMMEDIATELY AFTER ACTIVITY IS COMPLETED. BASE CANS, MANHOLES ETC. AND ASSOCIATED CONDUITS/DUCTS, FOUND OPEN SHALL BE RECLEANED AT THE CONTRACTOR'S EXPENSE.

26. THE TERM 'TOP CAN SECTION' HAS BEEN GENERICALLY USED IN THE PLANS TO DESCRIBE A TOP CAN SECTION, MIDDLE CAN SECTION, BASE CAN EXTENSION AND OTHER SIMILAR COMPONENTS. THE CONTRACTOR SHALL INDIVIDUALLY MEASURE AND IDENTIFY THE SPECIFIC COMPONENT(S) REQUIRED TO PROPERLY ADJUST THE BASE CAN HEIGHT IN ACCORDANCE WITH FAA REQUIREMENTS. THE CONTRACTOR SHALL INDIVIDUALLY MEASURE AND RECORD THE BOLT CENTER ON EACH BASE CAN TO BE EXTENDED AND THE REQUIRED HEIGHT OF THE BASE CAN TOP SECTION NECESSARY TO PLACE THE FIXTURE AT THE PROPER ELEVATION. THIS RECORDED INFORMATION SHALL BE SUBMITTED AS PART OF THE ASBUILT INFORMATION.

27. ABANDONED DUCT BANKS AND CONDUITS SHALL REMAIN IN PLACE WITH REMOVAL NECESSARY ONLY WHERE INTERFERENCES WITH THE NEW WORK EXIST. ANY EXISTING DUCTS REMOVED SHALL BE LEGALLY AND PROPERLY DISPOSED OF OFF THE AIRPORT SITE. THE CONDUITS/DUCTS SHALL BE SQUARELY CUT OFF AND CAPPED WATERTIGHT. AN END OF DUCT MARKER SHALL BE PLACED ABOVE EACH END OF THE ABANDONED IN PLACE CONDUIT/DUCT, AND THE LOCATION SHALL BE NOTED ON THE PROJECT RECORD DRAWINGS.

28. EDGE LIGHT FIXTURES SHALL BE LOCATED AS SHOWN IN THE CONTRACT DOCUMENTS. ON STRAIGHT SECTIONS, THEY SHALL BE OPTICALLY IN LINE WHEN SIGHTED FROM EITHER END OF A STRAIGHT SECTION. BASE CANS FOR EDGE LIGHT FIXTURES SHALL BE INSTALLED AT THE DESIGNATED LOCATIONS WITH TOP FLANGES AT THE REQUIRED ELEVATION AND WITHIN 2 DEGREES OF LEVEL.

29. ALL RUNWAY EDGE LIGHTS SHALL BE LOCATED SUCH THAT A LINE BETWEEN LIGHTS ON OPPOSITE SIDES OF THE RUNWAY IS PERPENDICULAR TO THE RUNWAY CENTERLINE.

30. CHANGES TO THE LOCATION OF THE RUNWAY LIGHTS, SHALL BE SUBMITTED BY THE CONTRACTOR TO THE ENGINEER FOR APPROVAL.

31. THE DIMENSION BETWEEN LIGHTS SHOWN ON A RADIUS IS DEFINED AS THE CHORD LENGTH. LOCATIONS SHOWN ARE TO THE CENTER OF THE LIGHTING FIXTURE.

32. ALL CONCRETE USED FOR ELECTRICAL ITEMS SHALL CONFORM TO STRUCTURAL PORTLAND CEMENT CONCRETE, OR ACCEPTED FDOT CLASS II EQUIVALENT, USING 1 INCH MAXIMUM SIZE COARSE AGGREGATE (DOT #57 STONE) WITH A MINIMUM 28 DAY COMPRESSIVE STRENGTH OF 3,400 PSI, UNLESS NOTED OTHERWISE. WHERE REINFORCED DUCT BANKS ARE SPECIFIED, REINFORCING STEEL SHALL CONFORM TO ASTM A 615 GRADE 60. CONCRETE AND REINFORCING STEEL ARE INCIDENTAL TO THE RESPECTIVE PAY ITEM OF WHICH THEY ARE A COMPONENT PART. HIGH EARLY STRENGTH CONCRETE WILL BE REQUIRED FOR USE WITH DUCTS, CONDUITS, BASE CANS AND OTHER WORK AS DIRECTED BY THE ENGINEER, IN EXISTING OPERATIONAL AREAS AND WITHIN THE SAFETY AREAS OF OPERATIONAL PAVEMENT TO COMPLY WITH THE PROJECT PHASING AND SCHEDULING REQUIREMENTS AND WHERE THE PAVEMENT IS REQUIRED TO OPEN TO AIRCRAFT AT THE END OF THE DESIGNATED WORK PERIOD. THE EXTRA COST FOR THE HIGH EARLY STRENGTH CONCRETE SHALL BE CONSIDERED INCIDENTAL TO THE RESPECTIVE PAY ITEM OF WHICH IT IS A COMPONENT PART.

33. FLOWABLE MATERIAL USED TO BACK FILL CONDUIT AND DUCT BANK TRENCHES SHALL CONFORM TO THE REQUIREMENTS OF CONCRETE "CONTROLLED LOW STRENGTH MATERIAL" OR ACCEPTED FDOT NON-EXCAVATABLE FLOWABLE FILL (125 PSI MINIMUM) FDOT SPECIFICATION SECTION 121 "STANDARD SPECIFICATION FOR ROAD AND BRIDGE CONSTRUCTION" OR EQUIVALENT.

34. ALL ITEMS ARE NEW AND UNUSED UNLESS SPECIFICALLY NOTED OTHERWISE.

35. ELECTRICAL WORK WITHIN THE SAFETY AREA OF AN ACTIVE RUNWAY OR TAXIWAY WILL REQUIRE NIGHT WORK/CLOSURES. ANY WORK THAT COULD INTERFERE WITH NORMAL AIRPORT OPERATIONS WILL REQUIRE NIGHT WORK/CLOSURES. NIGHT WORK/CLOSURES SHALL BE PERFORMED BETWEEN 2300 HOURS AND 0630 HOURS AND BETWEEN ANY LATE ARRIVING OR EARLY DEPARTING FLIGHTS. AVAILABLE NIGHT WORK/CLOSURE HOURS ARE DEPENDANT UPON AIRPORT FLIGHT OPERATIONS AND MAY VARY FROM NIGHT TO NIGHT. NIGHT WORK SHALL BE COORDINATED WITH AND IS SUBJECT TO APPROVAL BY AIRPORT AIRPORT OPERATIONS.

36. ALL L-868 BASE CANS AND TRANSFORMER HOUSES SHALL BE EQUIPPED WITH ONE INTERNAL AND TWO EXTERNAL GROUND STRAPS EACH WITH GROUND CLAMPS. NOT MORE THAN ONE (1) SINGLE #2 AWG BARE SOLID COPPER CONDUCTOR SHALL BE PERMITTED TO BE TERMINATED ON ANY SINGLE BASE CAN GROUND CLAMP. ALL GROUNDING AND BONDING CONNECTIONS SHALL BE MADE IN ACCORDANCE WITH THE MANUFACTURERS RECOMMENDATIONS AND LISTINGS. ALL COUNTERPOISE AND GROUNDING/BONDING CONNECTIONS SHALL BE UL 467 LISTED FOR DIRECT EARTH BURIAL AND ENCASEMENT IN CONCRETE AND UL 96 LISTED FOR LIGHTNING PROTECTION. ALL TOP CAN SECTIONS SHALL BE EQUIPPED WITH ONE INTERNAL BASE CAN GROUND STRAP WITH A GROUND CLAMP. LIGHT BASE GROUND CLAMP SHALL BE JAQUITH AW0919, OLSON CLO1843 OR ACCEPTED EQUIVALENT. USE OF A BRASS WASHER IN LIEU OF A GROUND CLAMP IS SPECIFICALLY PROHIBITED.

37. ALL GALVANIZED MATERIALS SHALL BE HOT DIPPED GALVANIZED AFTER FABRICATION, CONFORMING TO ASTM A-386 AND/OR A-153, UNLESS NOTED OTHERWISE (UNO).

38. ALL BOLTING HARDWARE IN DAMP OR WET LOCATIONS SHALL BE STAINLESS STEEL. ALL MOUNTING CHANNEL AND BOLTING HARDWARE IN EXTERIOR, DAMP OR WET LOCATIONS SHALL BE STAINLESS STEEL.

39. THE CONTRACTOR SHALL GENERATE AND SUBMIT FOR APPROVAL A MAINTENANCE OF POWER PLAN FOR ALL ELECTRICAL SERVICES IMPACTED BY THIS PROJECT. CONTRACTOR SHALL MAINTAIN POWER (PERMANENT OR TEMPORARY) TO ALL FAA OR AIRPORT FACILITIES AT ALL TIMES UNLESS A SCHEDULED OUTAGE IS APPROVED. SCHEDULING AND DURATION OF ANY POWER OUTAGE IS AT THE SOLE DISCRETION OF THE OWNER. COST OF MAINTENANCE OF POWER AND ALL NECESSARY MATERIALS, LABOR, TRANSPORTATION, SUPERVISION AND COORDINATION SHALL BE CONSIDERED INCIDENTAL TO THE L-104 PAY ITEM PROVIDED.

SPECIAL NOTE TO CONTRACTOR:

PRIOR TO INITIATION OF ANY CONSTRUCTION IN THE FIELD, THE CONTRACTOR SHALL PROVIDE A WRITTEN NOTICE (RETURN RECEIPT REQUESTED) TO EACH OF THE AREA UTILITY COMPANIES AND FLORIDA SUNSHINE ONE CALL AS PRESCRIBED BY STATE LAW. THE CONTRACTOR SHALL PROVIDE THE OWNER AND ENGINEER WITH A COPY OF THE RECEIPT OF SAID WRITTEN NOTIFICATION TO EACH OF THE UTILITY COMPANIES OR CITY DEPARTMENTS. THIS REQUIREMENT IS IN ADDITION TO ANY OTHER STATE LAWS REGARDING PUBLIC NOTIFICATION PRIOR TO EXCAVATION. CALL 811 SUNSHINE ONE CALL TWO DAYS MINIMUM PRIOR TO DIGGING. GO TO WWW.CALLSUNSHINE.COM FOR MORE INFORMATION.

ABBREVIATIONS

ABBREVIATIONS	DESCRIPTIONS	ABBREVIATIONS	DESCRIPTIONS
AC	ADVISORY CIRCULAR	MAX	MAXIMUM
AWG	AMERICAN WIRE GAUGE	MIN	MINIMUM
CB	CIRCUIT BREAKER	N/A	NOT APPLICABLE
CE	CONCRETE ENCASE	PH	PHASE
CL	CENTERLINE	PI	POINT OF INTERSECTION
CND	CONDUIT	PT	POINT OF TANGENCY
CCR	CONSTANT CURRENT REGULATOR	R	RADIUS
DEB	DIRECT EARTH BURIAL	REF	REFERENCE
DWG	DRAWING	RGS	RIGID GALVANIZED STEEL
EA	EACH	RPR	RESIDENT PROJECT REPRESENTATIVE
ELEC	ELECTRICAL	SHT	SHEET
FM	FORCE MAIN	SPECS	SPECIFICATIONS
FAA	FEDERAL AVIATION ADMINISTRATION	STA	STATION
GALV	GALVANIZED	TW	TAXIWAY
GEN	GENERATOR	TYP	TYPICAL
GND	GROUND	UNO	UNLESS NOTED OTHERWISE
GRS	GALVANIZED RIGID STEEL	V	VOLT

AVCON
TRANSFORMING TODAY'S IDEAS INTO TOMORROW'S REALITY

NO.	DATE	REVISION	BY

AIRFIELD ELECTRICAL GENERAL NOTES

RELEASE FOR BID

AIRPORT TERMINAL AND HANGAR DEVELOPMENT

PREPARED FOR

DEFUNIAK SPRINGS MUNICIPAL AIRPORT

DESIGNED BY: S.H.
DRAWN BY: S.H.
CHECKED BY: M.G.
APPROVED BY: V.L.
PROJECT NO: 2019.028.01
DATE: NOVEMBER 1, 2021

SHEET NUMBER
E-000

THIS DOCUMENT CONTAINS PRIVILEGED AND PROPRIETARY INFORMATION, ALL OF WHICH IS EXPRESSLY PROVIDED BY AVCON INC., FOR USE BY THE INTENDED RECIPIENT, AND FOR A SPECIFIC PURPOSE. WITHOUT THE EXPRESS WRITTEN CONSENT OF AVCON, INC. ANY DISTRIBUTION, REPRODUCTION, OR OTHER USE OF THIS DOCUMENT, IN WHOLE OR IN PART, IS STRICTLY PROHIBITED

FOREIGN OBJECT DEBRIS NOTES:

1. FOREIGN OBJECT DEBRIS (FOD): WASTE AND LOOSE MATERIALS, COMMONLY REFERRED TO AS FOD, ARE CAPABLE OF CAUSING DAMAGE TO AIRCRAFT LANDING GEARS, PROPELLERS, AND JET ENGINES. CONTRACTOR SHALL NOT LEAVE OR PLACE FOD ON OR NEAR ACTIVE AIRCRAFT MOVEMENT AREAS. MATERIALS TRACKED ONTO THESE AREAS MUST BE CONTINUOUSLY REMOVED DURING THE CONSTRUCTION PROJECT. THE CONTRACTOR SHALL ALSO CAREFULLY CONTROL AND CONTINUOUSLY REMOVE WASTE OR LOOSE MATERIALS THAT MIGHT ATTRACT WILDLIFE.
2. THE CONTRACTOR'S MEANS AND METHODS SHALL BE ESTABLISHED SUCH THAT THE GENERATION OF FOD IS MINIMIZED. THE CONTRACTOR SHALL IMMEDIATELY CLEAN OR REMOVE ALL FOD CAUSED BY THE CONTRACTORS ACTIVITIES FROM THE AOA.
3. FOD, NOT CAUSED BY THE CONTRACTOR'S ACTIVITIES, BUT DISCOVERED BY THE CONTRACTOR IN THE COURSE OF THE CONTRACTOR'S DUTIES SHALL BE REPORTED TO RPR. FOD THAT IS SMALL ENOUGH TO BE PICKED UP BY HAND SHALL BE PICKED UP AND REMOVED BY THE OBSERVING PERSON.
4. AS A PART OF THE CONTRACTOR'S EXCAVATION ACTIVITIES, PIECES OF CONCRETE, METAL, PIPE, ROCKS, DIRT CLODS, ETC WILL BE UNCOVERED. THE CONTRACTOR SHALL PROVIDE THE NECESSARY PERSONNEL TO PICK UP ALL PIECES OF CONCRETE, METAL, PIPE, ROCKS, DIRT CLODS, ETC. 1/2" IN DIAMETER OR LARGER THAT ARE UNCOVERED, AND SHALL PROPERLY DISPOSE OF THE DEBRIS.
5. THE CONTRACTOR IS REQUIRED TO MAINTAIN A POWER SWEEPER ON SITE AT ALL TIMES AND SHALL MAINTAIN CLEAN WORK AREAS AND CROSSINGS AT ALL TIMES.
6. FOD REMOVAL SHALL BE CONSIDERED INCIDENTAL TO THE PAY ITEMS PROVIDED IN THE CONTRACT DOCUMENTS.



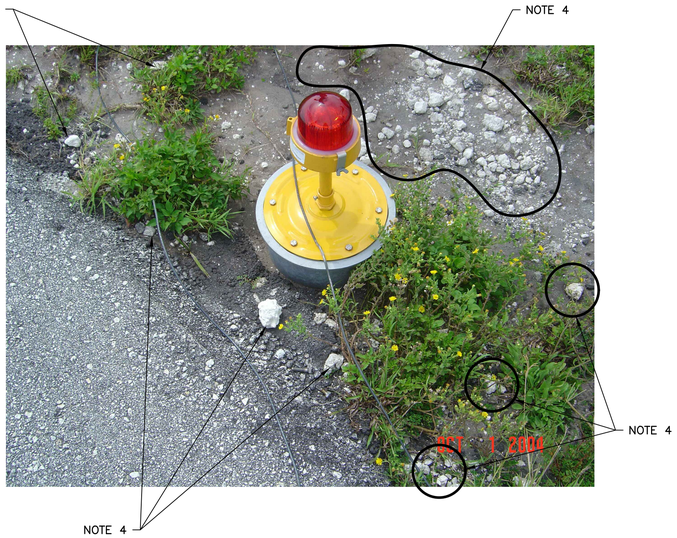

THIS DOCUMENT CONTAINS PRIVILEGED AND PROPRIETARY INFORMATION, ALL OF WHICH IS EXPRESSLY PROVIDED BY AVCON, INC., FOR USE BY THE INTENDED RECIPIENT, AND FOR A SPECIFIC PURPOSE. WITHOUT THE EXPRESS WRITTEN CONSENT OF AVCON, INC, ANY DISTRIBUTION, REPRODUCTION, OR OTHER USE OF THIS DOCUMENT, IN WHOLE OR IN PART, IS STRICTLY PROHIBITED

AVCON
TRANSFORMING TODAY'S IDEAS INTO TOMORROW'S REALITY

NO.	DATE	REVISION	BY

FOREIGN OBJECT DEBRIS (FOD) CONTROL

RELEASE FOR BID

AIRPORT TERMINAL AND HANGAR DEVELOPMENT

PREPARED FOR

DEFUNIAK SPRINGS MUNICIPAL AIRPORT

DESIGNED BY:	S.H.
DRAWN BY:	S.H.
CHECKED BY:	M.G.
APPROVED BY:	V.L.
PROJECT NO:	2019.028.01
DATE:	NOVEMBER 1, 2021

SHEET NUMBER

E-001

V:\2019\2019.028.01 – DEFUNIAK SPRINGS TWA TERMINAL NV FILES\000 CAD\1902801 E001_FOD.DWG 1/18/2022 5:15 PM

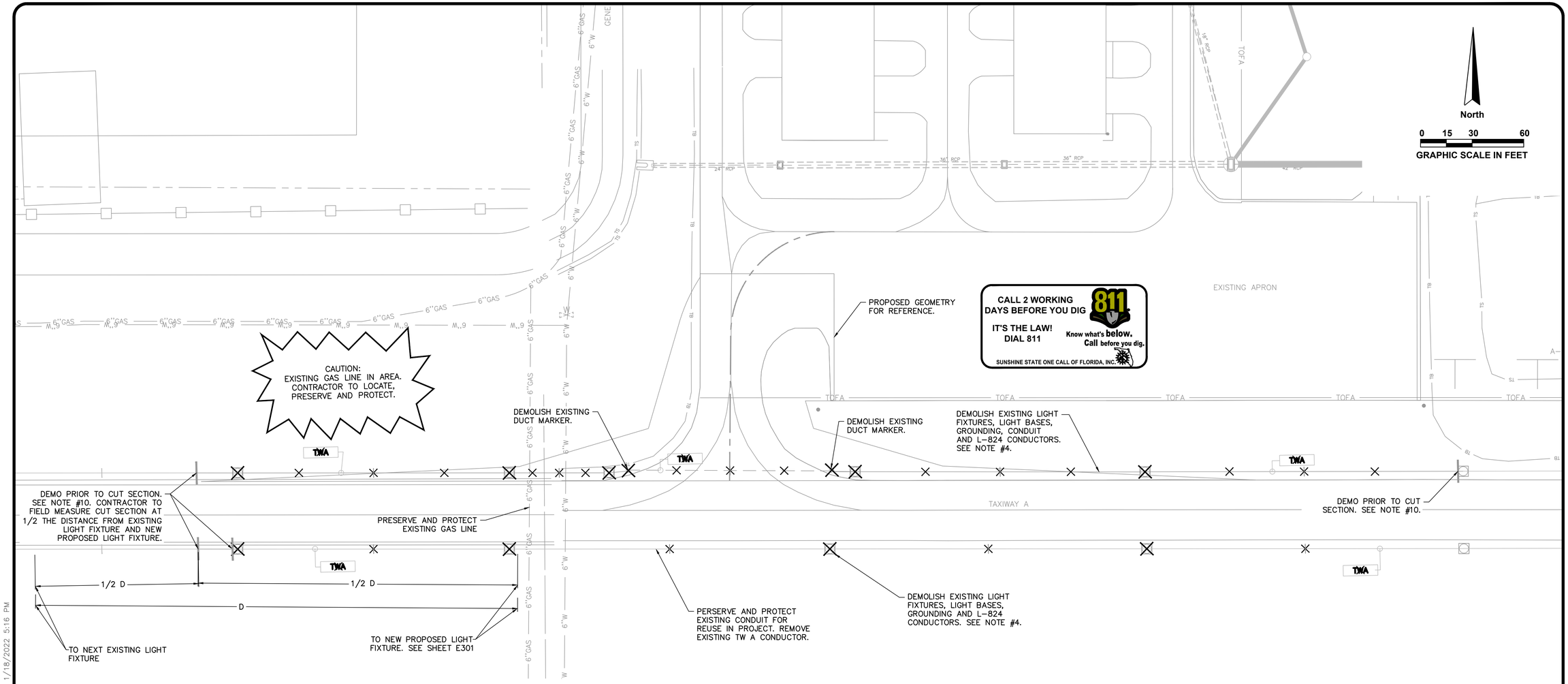

ELECTRICAL DEMOLISHION NOTES

1. SEE SHEET E001 AND E002 FOR GENERAL NOTES AND SYMBOL LEGEND.
2. ELECTRICAL DEMOLITION WORK SHALL BE LIMITED TO THE AREAS AND SCHEDULES IDENTIFIED IN THE APPROVED PHASING PLANS. CONTRACTOR SHALL MAINTAIN OPERATIONAL STATUS OF RUNWAY – TAXIWAY LIGHTING SYSTEMS UNTIL PERMISSION FROM RPR IS GRANTED TO DEMOLISH. DEMOLITION SHALL BE PHASED AS REQUIRED TO MAINTAIN AIRPORT OPERATIONS.
3. PROTECT EXISTING SYSTEMS/COMPONENTS AND ITEMS TO REMAIN.
4. REMOVE EXISTING FIXTURES, BASE PLATES AND TURN OVER TO OWNER. ALL REMOVED CABLES, DUCTS, BASE CANS, SIGN PADS, MANHOLES, L-830 TRANSFORMERS, L-824 CABLES, ETC SHALL BECOME THE PROPERTY OF THE CONTRACTOR AND SHALL BE LEGALLY DISPOSED OF OFF THE AIRPORT PROPERTY. REMOVED ITEMS SHALL NOT BE REUSED IN THE NEW WORK.
5. ALL DEMOLISHED COMPONENTS AND MATERIALS SHALL BE LEGALLY DISPOSED OF OFF AIRPORT PROPERTY BY THE CONTRACTOR.
6. REMOVE EXISTING L-824 CONDUCTOR FROM EXISTING FIXTURE TO FIXTURE BEING REMOVED AND PROTECT EXISTING CONDUIT AND COUNTERPOISE TO BE REUSED. NEW CABLE SHALL BE PROVIDED BETWEEN EXISTING FIXTURE AND NEW FIXTURE. SEE AIRFIELD LIGHTING CIRCUITING SHEETS.
7. EACH EXISTING BASE CAN BEING REUSED OR OPENED SHALL BE CLEANED OF ALL SAND AND DEBRIS.
8. SECURE COVERS ON ALL BASE CANS, MANHOLES ETC. ONCE CONDUIT/DUCT AND BASE CANS HAVE BEEN CLEANED. BASE CANS, MANHOLES ETC. MAY BE OPENED FOR WORK ACTIVITIES BUT SHALL BE CLOSED IMMEDIATELY AFTER ACTIVITY IS COMPLETED. ALL BASE CAN THREADED HOLES SHALL BE TAPPED, AND ALL HARDWARE SHALL BE REPLACED. ALL DAMAGED BASE CAN, FIXTURE AND COVER ATTACHMENT HOLES SHALL BE REPAIRED BEFORE CLOSING. BASE CANS, MANHOLES ETC. AND ASSOCIATED CONDUITS/DUCTS, FOUND OPEN SHALL BE RECLEANED AT THE CONTRACTOR'S EXPENSE.
9. DURING THE DEMOLITION PHASE AND PRIOR TO RECONSTRUCTION THE CONTRACTOR SHALL VERIFY THAT FUNCTIONAL RACEWAY EXISTS FROM BASE CAN TO BASE CAN, TO CIRCUIT THE AIRFIELD LIGHTING AS SHOWN ON THE CIRCUITING PLANS. SHOULD ADDITIONAL RACEWAY NEED TO BE INSTALLED THE CONTRACTOR SHALL INSTALL THE RACEWAY PRIOR TO THE PAVING OPERATIONS. THE CONTRACTOR SHALL CERTIFY IN WRITING TO THE RPR PRIOR TO PAVING OPERATIONS THAT FUNCTIONAL RACEWAY EXISTS AND IS PROPERLY ROUTED TO PROVIDE FOR CIRCUITING IN ACCORDANCE WITH THE CONTRACT DOCUMENTS.
10. REMOVE EXISTING CONDUIT FROM CUT SECTION TO CUT SECTION. PROTECT REMAINING CONDUIT AND COUNTERPOISE TO BE EXTENDED INTO THE NEW WORK AREA.

CIRCUIT CALLOUTS:

TAXIWAY CIRCUIT

TW A
- A — TAXIWAY IDENTIFIER
- TW — TAXIWAY

GENERAL ELECTRICAL SYMBOL & LEGEND

PROPOSED LINETYPE DESCRIPTION	
LINETYPE	
AIRFIELD LIGHTING CONDUIT	
AIRFIELD LIGHTING MULTIWAY DUCT BANK XWX	

SYMBOL	EXISTING ITEM DESCRIPTION
	EXISTING 2" PVC CONDUIT. NUMBER OF HASH MARKS INDICATE THE NUMBER OF EXISTING L-824 5KV #8 AWG CABLES INSTALLED IN DUCT.
	EXISTING DUCT MARKER
	EXISTING L-861T(L) TAXIWAY EDGE LIGHT

SYMBOL	NEW ITEM DESCRIPTION
	DEMOLISH. REMOVE CABLE, DEMOLISH SIGN BASES, DEMOLISHED ITEMS BECOME THE PROPERTY OF THE CONTRACTOR AND SHALL BE REMOVED FROM THE PROJECT.
	L-858(L) Y, L, R SIGN, STYLE 2, SIZE 2 WITH LED LIGHT SOURCE INSTALLED ON A CONCRETE BASE WITH A L-867D 24" DEEP LIGHT BASE, WITH 1/2" THICK GALVANIZED STEEL COVER PLATE AND GASKET, PROPERLY SIZED L-830 TRANSFORMER(S), L-823 CONNECTORS, AND ALL INCIDENTALS.
	L-861T(L), OMNI-DIRECTIONAL, BLUE, LED, MITL T/W EDGE LIGHT, COLUMN MOUNTED ON A L-867B/D DEEP LIGHT BASE WITH A "CORTEN" OR ACCEPTED EQUIVALENT BASE PLATE WITH GASKET AND PROPERLY SIZED L-830 TRANSFORMER, L-823 CONNECTORS, AND ALL INCIDENTALS. ALIGN AND LEVEL AS REQUIRED. THE OVERALL HEIGHT SHALL BE 14".
	2" SCHEDULE 40 PVC DIRECT BURIED CONDUIT. NUMBER OF HASH MARKS INDICATE THE NUMBER OF NEW L-824, TYPE C, 5KV, #8 AWG, CABLES INSTALLED IN DUCT. NO SAW CUTTING OF EXISTING FULL STRENGTH PAVEMENT IS PERMITTED, EXCEPT AS SPECIFICALLY NOTED ON PLANS.
XWX	MULTIWAY DUCT BANK DIRECT BURIED. QUANTITY AND SIZE OF DUCTS NOTED ON PLANS. ALL CONDUIT WORK WITHIN EXISTING PAVEMENT SHALL BE DIRECTIONAL BORE. COST OF DIRECTIONAL BORE IS INCIDENTAL TO RESPECTIVE L-110 CONCRETE ENCASED PAY ITEM. NO OPEN CUTTING OF EXISTING PAVEMENT IS PERMITTED.
	3/4" DIAMETER COPPER-CLAD STEEL SECTIONAL GROUND ROD LENGTH AS DETERMINED BY EARTH RESISTANCE. THE GROUND ROD SHALL HAVE EARTH RESISTANCE OF 10 OHMS PRIOR TO CONNECTION OF THE COUNTERPOISE CONDUCTORS.

AVCON
TRANSFORMING TODAY'S IDEAS INTO TOMORROW'S REALITY

THIS DOCUMENT CONTAINS PRIVILEGED AND PROPRIETARY INFORMATION, ALL OF WHICH IS EXPRESSLY PROVIDED BY AVCON, INC., FOR USE BY THE INTENDED RECIPIENT, AND FOR A SPECIFIC PURPOSE. WITHOUT THE EXPRESS WRITTEN CONSENT OF AVCON, INC. ANY DISTRIBUTION, REPRODUCTION, OR OTHER USE OF THIS DOCUMENT, IN WHOLE OR IN PART, IS STRICTLY PROHIBITED

NO.	DATE	REVISION	BY

AIRFIELD LIGHTING ELECTRICAL DEMOLITION

RELEASE FOR BID

AIRPORT TERMINAL AND HANGAR DEVELOPMENT

PREPARED FOR

DEFUNIAK SPRINGS MUNICIPAL AIRPORT

DESIGNED BY:	S.H.
DRAWN BY:	S.H.
CHECKED BY:	M.G.
APPROVED BY:	V.L.
PROJECT NO:	2019.028.01
DATE:	NOVEMBER 1, 2021

SHEET NUMBER
E-101

V:\2019\2019.028.01 – DEFUNIAK SPRINGS TWA TERMINAL NV FILES\000 CAD\190280\E101_DEMO.DWG 1/18/2022 5:16 PM

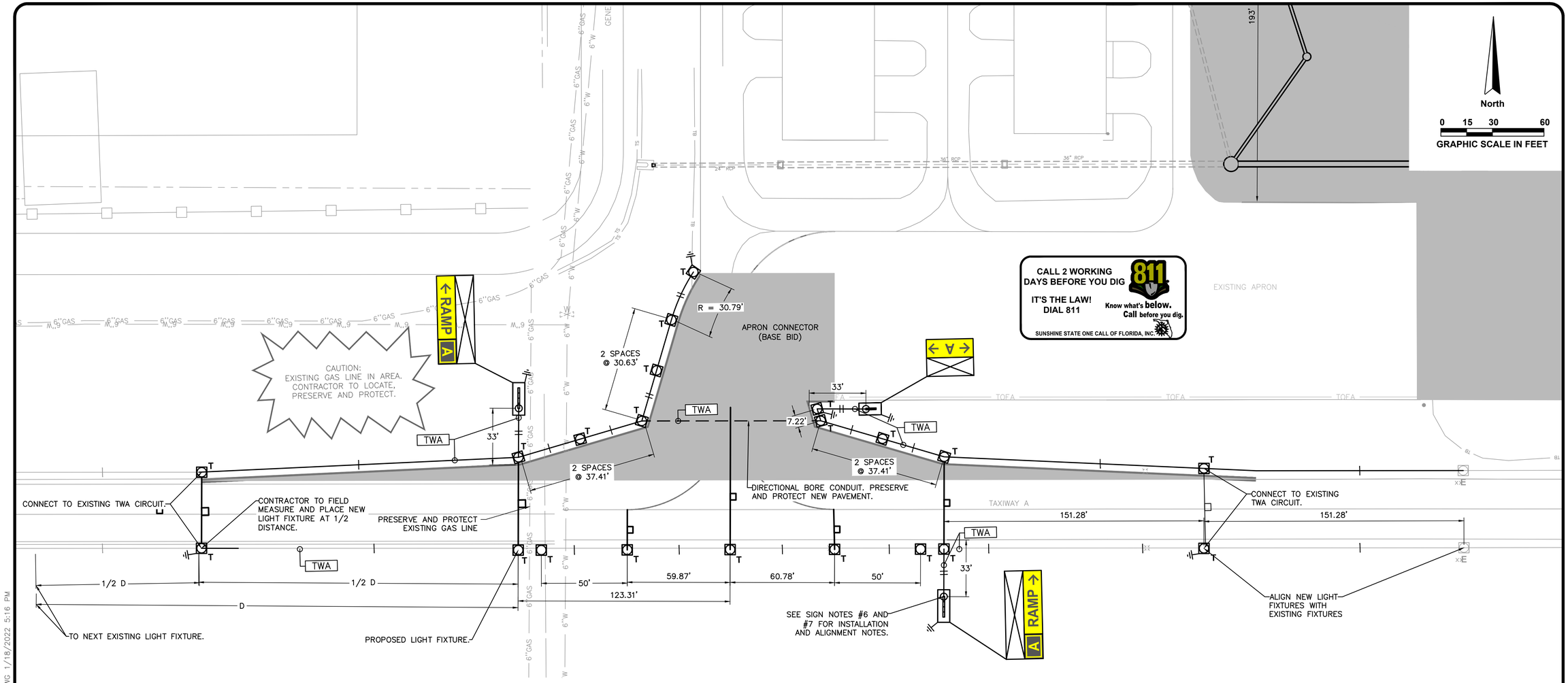

ELECTRICAL LAYOUT NOTES

1. SEE CONTRACT DETAILS AND CONTRACT SPECIFICATIONS FOR ADDITIONAL INFORMATION REGARDING INSTALLATION OF LIGHT FIXTURES, SIGNS AND ASSOCIATED CONDUIT.
2. ALL FIXTURES, SIGNS, BASE CANS ETC., SHALL BE INSTALLED AS SHOWN ON THE CONTRACT DOCUMENTS OR ACCEPTED SHOP DRAWINGS AND IN ACCORDANCE WITH THE APPLICABLE FAA ADVISORY CIRCULARS AND MANUFACTURERS' RECOMMENDATIONS. SURVEY INSTRUMENTS SHALL BE USED TO POSITION ALL ITEMS TO INSURE PRECISE ORIENTATION. TOLERANCES GIVEN IN THE FAA ADVISORY CIRCULARS AND THE CONTRACT DOCUMENTS SHALL NOT BE EXCEEDED. WHERE NO TOLERANCE IS GIVEN, NO DEVIATION IS PERMITTED. ITEMS NOT INSTALLED IN ACCORDANCE WITH THE FAA ADVISORY CIRCULARS AND THE CONTRACT DOCUMENTS SHALL BE REPLACED BY AND AT THE EXPENSE OF THE CONTRACTOR.
3. POSITION SIGNS WITH SURVEY INSTRUMENTS AS INDICATED IN THE CONTRACT DOCUMENTS. STAKE LOCATION OF ALL FIXTURES, SIGNS, BASE CANS ETC., PRIOR TO INSTALLATION TO DEMONSTRATE ACCURACY OF LAYOUT, SPACING INTERVALS, AND COORDINATION WITH SITE FEATURES. BRING CONFLICTS TO THE ATTENTION OF THE ENGINEER. ALLOW 5 CALENDAR DAYS FOR A RESOLUTION. SIGNS SHALL BE ORIENTED AT 90 DEGREES TO THE DIRECTION OF THE TAXING PATH FROM WHICH IT IS VIEWED, UNLESS NOTED OTHERWISE.
4. EDGE LIGHT UNITS SHALL BE ALIGNED OFF THE FULL STRENGTH EDGE OF PAVEMENT WITH EXISTING LIGHTS. ON STRAIGHT SECTIONS, THEY SHALL BE OPTICALLY IN LINE WHEN SIGHTED FROM EITHER END OF A STRAIGHT SECTION. BASE CANS FOR EDGE LIGHT UNITS SHALL BE INSTALLED AT THE DESIGNATED LOCATIONS WITH TOP FLANGES AT THE REQUIRED ELEVATION AND WITHIN 2 DEGREES OF LEVEL. ALL ELEVATED EDGE LIGHTS SHALL BE INSTALLED AT AN EQUAL HEIGHT ABOVE GRADE NOT TO EXCEED 14 INCHES.
5. SIGN SCHEDULES FOR SIGN PANEL REPLACEMENT REQUIREMENTS. SEE THIS SHEET.
6. ALL FIXTURES SHALL BE INSTALLED ON A SINGLE PIECE BASE CAN IN TURFED AREAS. PRECAST CONCRETE ENVELOPED LIGHT BASES ARE PERMITTED, SEE DETAILS.
7. CONTRACTOR SHALL NOTE THE EDGE OF CONCRETE ENVELOPMENT SHALL BE LESS THAN 1" ABOVE FINISHED TURFED AREA. THE FRANGIBLE POINT OF THE LIGHT FIXTURE SHALL NOT BE HIGHER THAN 3" FROM THE FINISHED TURFED GRADE. FIXTURES EXCEEDING THE 3" MAXIMUM FROM FINISHED GRADE FROM THE FRANGIBLE POINT OF THE LIGHT SHALL BE REMOVED AND LOWERED AT THE CONTRACTORS EXPENSE.

ELECTRICAL CIRCUITING NOTES

1. SEE SHEET E001 FOR ELECTRICAL GENERAL NOTES, AND E002 FOR ELECTRICAL SYMBOLS.
2. SEE CONTRACT DETAILS AND CONTRACT SPECIFICATIONS FOR ADDITIONAL INFORMATION REGARDING INSTALLATION OF LIGHT FIXTURES, SIGNS, ASSOCIATED CONDUIT, CABLE, COUNTERPOISE, AND APPURTENANCES.
3. AIRFIELD LIGHTING FIXTURES SHALL BE CONNECTED IN THE SERIES CIRCUIT IN THE SEQUENCE SHOWN IN THE CONTRACT DOCUMENTS. THE "RETURN" CONDUCTOR SHALL NOT BE CONNECTED TO ANY AIRFIELD LIGHTING FIXTURES. SEE SPECIFICATION SP-111 FOR FURTHER DETAILS.
4. EACH FIXTURE SHALL BE INDIVIDUALLY BONDED TO THE BASE CAN WITH A #6 AWG STRANDED COPPER, GREEN THWN-2 INSULATED BONDING JUMPER. THE WIRE SHALL CONFORM TO ASTM B3, ASTM B8 AND ASTM B33
5. EACH FIELD LIGHTNING ARRESTOR ASSEMBLY SHALL BE INDIVIDUALLY BONDED TO THE BASE CAN WITH A #2 AWG STRANDED COPPER, GREEN THWN-2 INSULATED BONDING JUMPER. THE WIRE SHALL CONFORM TO ASTM B3, ASTM B8 AND ASTM B33.
6. EACH SIGN SHALL BE BONDED TO THE SIGN GROUND ROD AND LIGHT BASE WITH A #2 AWG STRANDED COPPER, GREEN THWN-2 INSULATED BONDING JUMPER. THE WIRE SHALL CONFORM TO ASTM B3, ASTM B8 AND ASTM B33. THE SIGN BONDING JUMPER SHALL BE SIX INCHES LONGER THAN THE SIGN TETHERS TO ALLOW THE TETHERS TO PROPERLY OPERATE.
7. THE CONTRACTOR SHALL MANDREL EACH INDIVIDUAL NEW CONDUIT AND EACH EXISTING CONDUIT TO BE UTILIZED IN THE PROJECT.
8. LOCATE EXISTING COUNTERPOISE AND INTERCONNECT TO NEW COUNTERPOISE. TYPICAL ALL LOCATIONS WHERE TWO COUNTERPOISE INTERSECT.
9. THE CONTRACTOR SHALL SWAB OUT ALL CONDUITS/DUCTS AND CLEAN ALL BASE CAN, MANHOLE, PULL BOXES, ETC. INTERIORS IMMEDIATELY PRIOR TO PULLING CABLE. ONCE CLEANED AND SWABBED THE BASE CANS, MANHOLE, PULL BOXES, ETC. AND ALL ACCESSIBLE POINTS OF ENTRY TO THE DUCT/CONDUIT SYSTEM SHALL BE KEPT CLOSED EXCEPT WHEN INSTALLING CABLES. CLEANING OF DUCTS, BASE CANS, MANHOLES, ETC. IS INCIDENTAL TO THE CABLE INSTALLATION PAY ITEM. ALL RACEWAY SYSTEMS LEFT OPEN, AFTER INITIAL CLEANING, FOR ANY REASON SHALL BE RECLEANED AT THE CONTRACTOR'S EXPENSE. ALL ACCESSIBLE POINTS SHALL BE KEPT CLOSED WHEN NOT INSTALLING CABLE. THE CONTRACTOR SHALL VERIFY EXISTING DUCTS PROPOSED FOR USE IN THIS PROJECT AS CLEAR AND OPEN. THE CONTRACTOR SHALL NOTIFY THE ENGINEER OF ANY BLOCKAGE IN THE EXISTING DUCTS.
10. SPECIFICATION SECTION SP-111 REQUIRES SPECIFIC TESTING TO BE PERFORMED, RECORDED AND SUBMITTED AS PART OF THE CLOSE OUT DOCUMENTS. SEE SPECIFICATION SP-106 AND SP-111 FOR DETAILS OF TESTING AND SUBMITTAL REQUIREMENTS.
11. WHENEVER A NEW L-823 COMPLETE KIT OR SUPERKIT IS INSTALLED ON A CONDUCTOR, A COMPLETE KIT OR SUPERKIT SHALL BE INSTALLED ON THE MATING CONDUCTOR. A L-823 SUPERKIT OR COMPLETE KIT SHALL NOT BE CONNECTED TO A STANDARD L-823 CONNECTOR.
12. DIRECTIONAL BORE DUCT SHALL BE INSTALLED IN ACCORDANCE WITH SPECIAL PROVISIONS SP-110A AND PAID FOR WITHIN THE RESPECTIVE CONCRETE ENCASED DUCT PAY ITEM.

SIGN NOTES

1. ALL SIGNS SHALL BE NEW, SIZE 2, STYLE 2, LED SIGNS CONNECTED TO CIRCUIT TWA.
2. THE ESTIMATED QUANTITY OF SIGN MODULES IS BASED UPON A LOCATION SIGN POPULATING AN ENTIRE SINGLE MODULE PLUS THE ACTUAL SIGN MESSAGE BASED ON TWO (2) CHARACTERS PER MODULE.
3. PAYMENT SHALL BE MADE ON THE BASIS OF A MODULE CONSISTING OF TWO CHARACTERS PER MODULE OR A LOCATION SIGN, REGARDLESS OF THE MANUFACTURING METHODS OR TECHNIQUES.
4. DASHES AND DOTS ARE NOT CONSIDERED CHARACTERS TO BE COUNTED IN THE ESTIMATED MODULE COUNT.
5. THE CONTRACTOR SHALL COMPLETELY SURVEY AND STAKE OUT EACH AREAS' SIGN LAYOUT PRIOR TO STARTING ANY INSTALLATION. SHOULD ANY IRREGULARITIES OCCUR IN THE SIGN LAYOUT, THE ENGINEER SHALL BE NOTIFIED IMMEDIATELY. THE BID ITEM PRICE SHALL INCLUDE THE NECESSARY LAYOUT FOR EACH SIGN, AND THE COST FOR ANY ADDITIONAL ADJUSTMENT OF THE LOCATION OF THE SIGNS, DUE TO THE EXISTING GEOMETRIC CONDITIONS.
6. UNLESS SPECIFICALLY NOTED OTHERWISE, ALL SIZE 2 SIGNS SHALL BE PERPENDICULAR TO THE TAXIWAY CENTERLINE.
7. UNLESS SPECIFICALLY NOTED OTHERWISE, ALL SIZE 2 SIGNS SHALL BE LOCATED 33' FROM THE NEAREST EDGE OF THE SIGN TO THE DEFINED EDGE OF FULL STRENGTH PAVEMENT.

SIGN SCHEDULE

SIGN NUMBER	NEW SIGN MESSAGE SIDE 1	NEW SIGN MESSAGE SIDE 2	TYPE L-858 SIDE 1	TYPE L-858 SIDE 2	MODULES
TWA-XXX	A RAMP → (P)	(P)	L|Y	BLANK	4
TWA-XXX	← RAMP A (P)	(P)	Y|L	BLANK	4
TWA-XXX	← A → (P)	(P)	L	BLANK	2

AVCON
TRANSFORMING TODAY'S IDEAS INTO TOMORROW'S REALITY

NO.	DATE	REVISION	BY

AIRFIELD LIGHTING ELECTRICAL LAYOUT & CIRCUITING

RELEASE FOR BID

AIRPORT TERMINAL AND HANGAR DEVELOPMENT

PREPARED FOR
DEFUNIAK SPRINGS MUNICIPAL AIRPORT

DESIGNED BY: S.H.
DRAWN BY: S.H.
CHECKED BY: M.G.
APPROVED BY: V.L.
PROJECT NO: 2019.028.01
DATE: NOVEMBER 1, 2021

SHEET NUMBER
E-301

THIS DOCUMENT CONTAINS PRIVILEGED AND PROPRIETARY INFORMATION, ALL OF WHICH IS EXPRESSLY PROVIDED BY AVCON, INC., FOR USE BY THE INTENDED RECIPIENT, AND FOR A SPECIFIC PURPOSE. WITHOUT THE EXPRESS WRITTEN CONSENT OF AVCON, INC. ANY DISTRIBUTION, REPRODUCTION, OR OTHER USE OF THIS DOCUMENT, IN WHOLE OR IN PART, IS STRICTLY PROHIBITED

X:\2019\2019.028.01 - DEFUNIAK SPRINGS TWA TERMINAL NV FILES\000 CAD\190280\1 E301_LAY-CIR.DWG 1/18/2022 5:16 PM

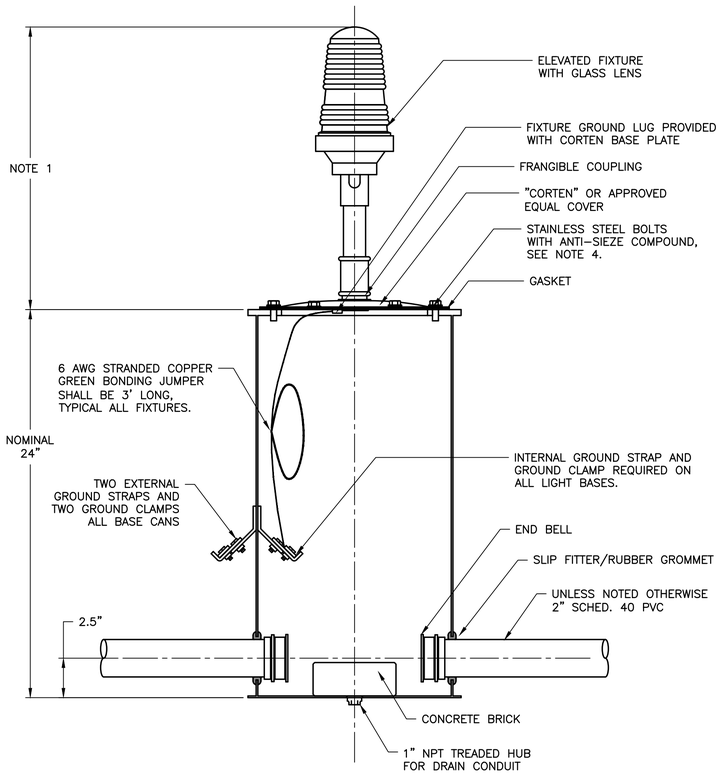

TYPICAL L-867B SINGLE PIECE LIGHT BASE

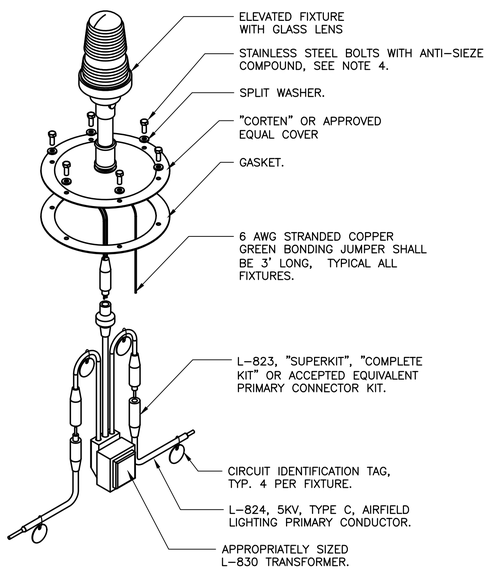

TYPICAL FIXTURE INSTALLATION

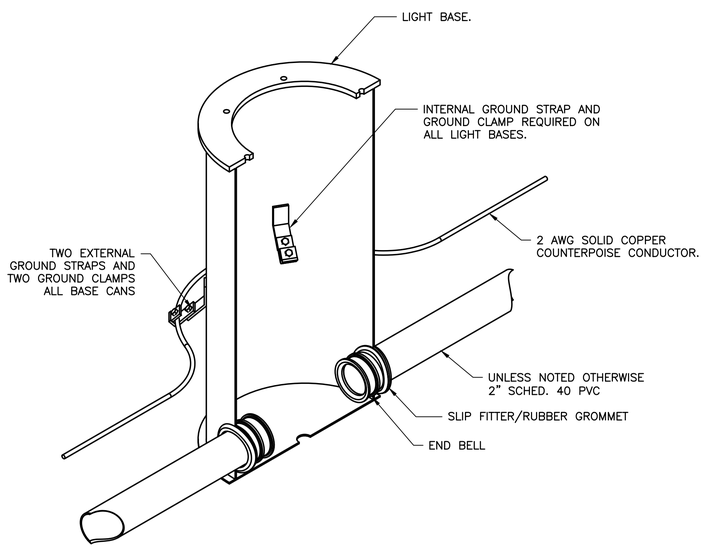

TYPICAL FIXTURE INSTALLATION

ELEVATED FIXTURE GENERAL NOTES:

1. ALL RUNWAY AND TAXIWAY LIGHTS SHALL BE 14'' HIGH UNLESS NOTED OTHERWISE IN THE CONTRACT DOCUMENTS.
2. ALL BASE CAN INSTALLATION TECHNIQUES, METHODS, MATERIALS, ETC. SHALL BE SUBMITTED TO THE PROJECT MANAGER FOR REVIEW AND APPROVAL PRIOR TO THE START OF WORK.
3. THE FINISHED PAVEMENT SURFACE SHALL BE PROTECTED FROM FOREIGN SUBSTANCES WHICH COULD CAUSE STAINING, IE. CONCRETE, OIL, ETC. THE CONTRACTOR SHALL IMMEDIATELY CLEAN ALL SPILLS AND CORRECT/CLEAN ANY STAINED SURFACES AT THE CONTRACTOR'S EXPENSE.
4. THE BASE CAN COVER MOUNTING BOLTS SHALL EXTEND THRU THE BASE CAN MOUNTING FLANGE INTO THE BASE CAN A MINIMUM OF 1/2''. THE BOLTS SHALL HAVE ENOUGH THREAD LENGTH SO THEY DO NOT SHOULDER OUT BEFORE THE FIXTURE IS SECURELY TIGHTENED. ALL BOLTING HARDWARE SHALL BE STAINLESS STEEL AND INSTALLED WITH ANTI-SIEZE COMPOUND.
5. WHEN FIXTURE IS INSTALLED IN EXISTING PAVEMENT. THE EXISTING PAVEMENT SHALL BE SAWCUT THE FULL DEPTH OF THE PAVEMENT PRIOR TO EXCAVATION TO PROVIDE A SMOOTH EDGE.
6. ALL FIXTURES, SHALL BE INSTALLED WITH FIXTURE ID MARKERS. MARKER SHALL BE PLACED IN WET CONCRETE ON THE TAXIWAY SIDE OF THE FIXTURE. SEE CIRCUITING PLANS, DETAILS AND SPECIFICATIONS.
7. ALL DUCT TO BE INSTALLED UNDER EXISTING PAVEMENT SHALL UTILIZE DIRECTIONAL BORE METHODS, UNLESS NOTED OTHERWISE ON THE PLANS. SEE DIRECTIONAL BORE CONDUIT DETAILS AND L-110 SPECIFICATIONS FOR ADDITIONAL DETAILS.
8. LIGHT BASES SHALL BE LEVEL WITHIN ONE DEGREE. CONTRACTOR SHALL BE RESPONSIBLE TO LEVEL (WITHIN ONE DEGREE) ANY BASE CANS WHICH SETTLE DURING CONSTRUCTION OR THROUGHOUT THE WARRANTY PERIOD.
6. P-610 CONCRETE ENVELOPMENT AROUND LIGHT BASES SHALL BE COMPLETELY CONSOLIDATED BY MECHANICAL MEANS AND SHALL BE FREE OF ANY VOIDS.
7. BEFORE PLACING CONCRETE THE CONTRACTOR SHALL DEMONSTRATE TO THE PROJECT MANAGER THAT THE BASE CANS ARE AT THE CORRECT LOCATION, ELEVATION, AZIMUTH AND ROTATION.
8. THE P-610 CONCRETE, FOR USE IN EXISTING PAVEMENTS, SHALL BE HIGH EARLY STRENGTH, SUCH AS "SET 45" OR APPROVED EQUAL, PER THE SPECIFICATIONS. NO CORROSIVE ADDITIVES (SUCH AS CALCIUM CHLORIDE) OR CORROSIVE MIXTURES WILL BE PERMITTED. HIGH EARLY STRENGTH P-610 CONCRETE WILL BE REQUIRED ON DUCT/CONDUIT, LIGHT BASES AND OTHER WORK IN EXISTING OPERATIONAL AREAS, AND WITHIN THE SAFETY AREAS OF OPERATIONAL PAVEMENT, TO MEET THE PROJECT PHASING SCHEDULING REQUIREMENTS. THE EXTRA COST FOR THE HIGH EARLY STRENGTH P-610 CONCRETE SHALL BE INCIDENTAL TO THE RESPECTIVE BID ITEM OF WHICH IT IS A COMPONENT PART.
9. WHEN THREE (3) OR MORE CONDUITS ENTER A L-867B (12" DIAMETER) BASE CAN THAT CONTAIN CIRCUIT CONDUCTORS A L-867D (16" DIAMETER) BASE CAN SHALL BE USED. SEE CIRCUITING PLANS TO DETERMINE LOCATIONS OF WHERE L-867D LIGHT BASES SHALL BE USED. THE DRAIN CONNECTIONS IN THE LIGHT BASE ARE EXCLUDED FROM CONDUIT COUNT.
10. SINGLE PIECE LIGHT BASES SHALL BE USED IN PRECAST LIGHT BASE UNITS AND WHERE PERMITTED IN PCC SHOULDER PAVEMENT.
11. TELESCOPIC LIGHT BASES SHALL BE USED IN ALL ASPHALT SHOULDER PAVEMENT INSTALLATIONS. SINGLE PIECE BASE CANS SHALL NOT BE INSTALLED IN ASPHALT PAVEMENT UNLESS NOTED OTHERWISE.

AVCON
TRANSFORMING TODAY'S IDEAS INTO TOMORROW'S REALITY

NO.	DATE	REVISION	BY

ELEVATED FIXTURE DETAILS

RELEASE FOR BID

AIRPORT TERMINAL AND HANGAR DEVELOPMENT

PREPARED FOR

DEFUNIAK SPRINGS MUNICIPAL AIRPORT

DESIGNED BY:	S.H.
DRAWN BY:	S.H.
CHECKED BY:	M.G.
APPROVED BY:	V.L.
PROJECT NO:	2019.028.01
DATE:	NOVEMBER 1, 2021

SHEET NUMBER

E-501

THIS DOCUMENT CONTAINS PRIVILEGED AND PROPRIETARY INFORMATION, ALL OF WHICH IS EXPRESSLY PROVIDED BY AVCON, INC., FOR USE BY THE INTENDED RECIPIENT, AND FOR A SPECIFIC PURPOSE. WITHOUT THE EXPRESS WRITTEN CONSENT OF AVCON, INC, ANY DISTRIBUTION, REPRODUCTION, OR OTHER USE OF THIS DOCUMENT, IN WHOLE OR IN PART, IS STRICTLY PROHIBITED

V:\2019\2019.028.01 - DEFUNIAK SPRINGS TWA TERMINAL NV FILES\000 CAD\1902801 E501-502_ELEVATED FIXTURES.DWG 1/18/2022 5:16 PM

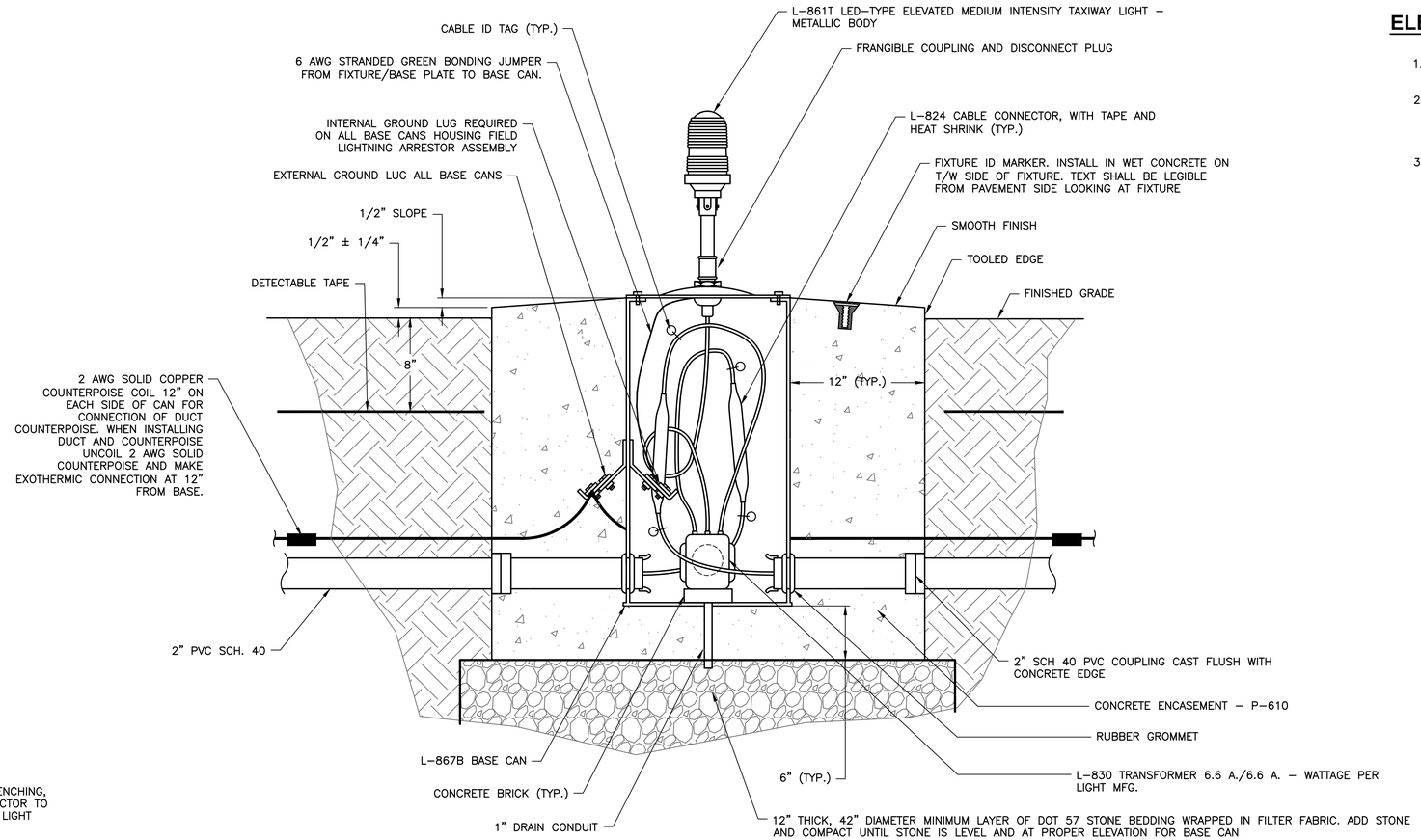

PRECAST L-867 BASE CAN - ELEVATION

L-867B SHOWN, INSTALLATION OF L-867D SIMILAR, INCREASE DIMENSIONS AS REQUIRED

ELEVATED FIXTURE NOTES:

1. SEE ELEVATED DETAIL SHEET E501 FOR ADDITIONAL NOTES AND LIGHT BASE DETAILS.
2. ALL FIXTURES, SIGNS ETC. SHALL BE INSTALLED WITH FIXTURE ID MARKERS. MARKER SHALL BE PLACED IN WET CONCRETE ON THE TAXIWAY SIDE OF THE FIXTURE. SEE CIRCUITING PLANS, DETAILS AND SPECIFICATIONS.
3. WHERE THREE (3) OR MORE CONDUITS ENTER A LIGHT BASE SUCH AS A CONDUIT BRANCH TO A SIGN, OTHER FIXTURE, DRAIN OR STUB OUT A L-867D BASE CAN SHALL BE USED.

NOTES:

1. ALL ITEMS SHOWN ABOVE EXCEPT TRENCHING, CONDUIT, COUNTERPOISE, AND CONDUCTOR TO BE INCLUDED IN PRICE BID FOR THE LIGHT ITEM.
2. VARIOUS HOLE LOCATIONS ARE REQUIRED - SEE PLAN. BASES SHALL BE OBTAINED WITH NECESSARY HOLES MADE AT THE FACTORY PRIOR TO GALVANIZING.

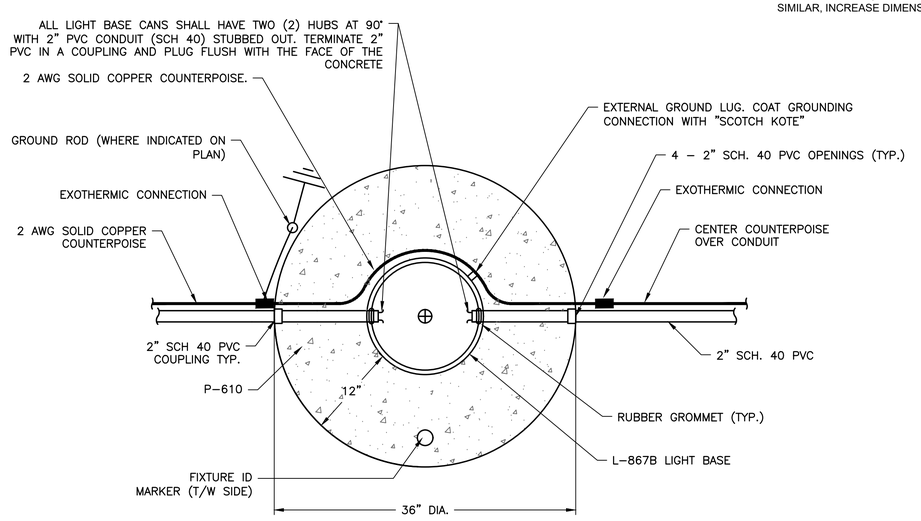

PRECAST L-867B BASE CAN - PLAN VIEW

L-867B SHOWN, TYPICAL OF LIGHT FIXTURE WITHOUT BRANCH TO SIGN OR OTHER FIXTURES

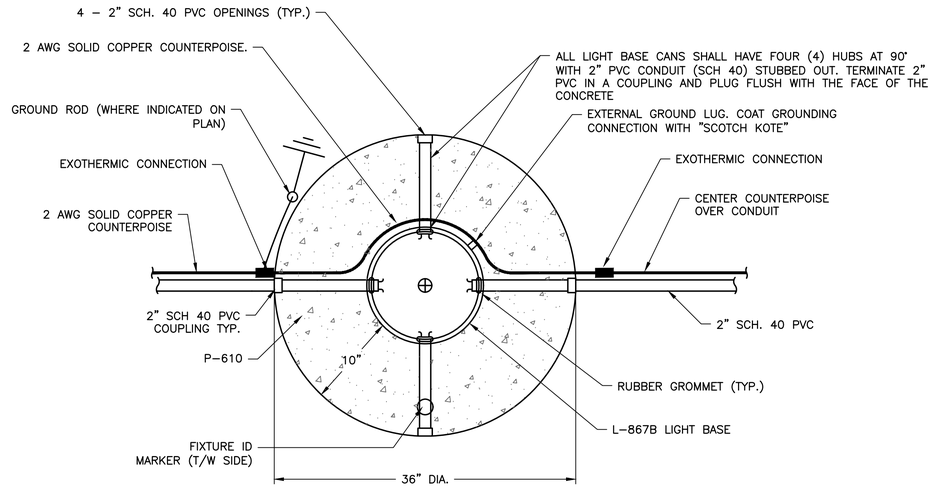

PRECAST L-867D BASE CAN - PLAN VIEW

L-867D SHOWN, TYPICAL OF LIGHT FIXTURE WITH BRANCH TO SIGN OR OTHER FIXTURES

V:\2019\2019.028.01 - DEFUNIAK SPRINGS TWA TERMINAL NV FILES\000 CAD\1902801 E501-502_ELEVATED FIXTURES.DWG 1/18/2022 5:16 PM

AVCON

TRANSFORMING TODAYS IDEAS INTO TOMORROW'S REALITY

NO.	DATE	REVISION	BY

PRECAST ELEVATED FIXTURES

RELEASE FOR BID

AIRPORT TERMINAL AND HANGAR DEVELOPMENT

PREPARED FOR

DEFUNIAK SPRINGS MUNICIPAL AIRPORT

DESIGNED BY:	S.H.
DRAWN BY:	S.H.
CHECKED BY:	M.G.
APPROVED BY:	V.L.
PROJECT NO:	2019.028.01
DATE:	NOVEMBER 1, 2021

SHEET NUMBER

E-502

THIS DOCUMENT CONTAINS PRIVILEGED AND PROPRIETARY INFORMATION, ALL OF WHICH IS EXPRESSLY PROVIDED BY AVCON, INC., FOR USE BY THE INTENDED RECIPIENT, AND FOR A SPECIFIC PURPOSE. WITHOUT THE EXPRESS WRITTEN CONSENT OF AVCON, INC., ANY DISTRIBUTION, REPRODUCTION, OR OTHER USE OF THIS DOCUMENT, IN WHOLE OR IN PART, IS STRICTLY PROHIBITED

NOTES:

1. ALL NEW SIGN MODULES, SIGNS AND ANY MODIFICATIONS TO EXISTING SIGNS SHALL CONFORM TO AC 150/5340-18 AND 150/5345-44, LATEST EDITIONS AND SIGNAGE AND MARKING SUPPLEMENTS. ALL MATERIALS, SIGN BASE DETAILS, ETC., SHALL BE SUBMITTED TO THE ENGINEER FOR APPROVAL. NEW SIGN PANELS SHALL BE FURNISHED BY THE MANUFACTURER OF THE SIGN IN WHICH THE NEW PANELS ARE TO BE INSTALLED.

2. THE DETAILS SHOWN IN THE PLANS PROVIDE THE MINIMUM REQUIREMENTS FOR SIGN INSTALLATIONS. THE CONTRACTOR SHALL USE STANDARDS APPLICABLE FOR THE PARTICULAR SIGN MANUFACTURER. THE BOLTING PATTERN, METHOD OF ANCHORING, ETC., SHALL BE PER SIGN MANUFACTURER'S RECOMMENDATIONS AND APPROVED BY THE ENGINEER.

3. THE SIGNS SHALL WITHSTAND MODE 1, 2 OR 3 WIND LOAD (AS NOTED IN CONTRACT DOCUMENTS) PER AC 150/5345-44, LATEST EDITION, WITHOUT DAMAGE. THE SIGN SHALL NOT BREAK AT THE FRANGIBLE POINTS NOR SUFFER PERMANENT DISTORTION. ALL SIGNS SHALL BE MODE 2 (200 MPH) UNLESS SPECIFICALLY NOTED OTHERWISE. SEE SIGN SCHEDULE.

4. ALL SIGNS SHALL BE FURNISHED WITH ONE TETHER PER MODULE. TETHERS SHALL BE 3/16" STAINLESS STEEL AIRCRAFT CABLE WITH A FORMED EYE ON BOTH ENDS. THE TETHER EYE SHALL BE ATTACHED TO THE SIGN HARD POINT IN ACCORDANCE WITH THE MANUFACTURERS RECOMMENDATIONS AND TO THE CONCRETE BASE BY BEING SANDWICHED BETWEEN TWO STAINLESS STEEL FENDER WASHERS, WITH A HILTI 1/2" DIAMETER X 6" SS (HAS RODS) HIT RE500 ADHESIVE ANCHOR, OR ACCEPTED EQUIVALENT. THE TETHER SHALL BE OF SUFFICIENT LENGTH TO HAVE A MINIMUM OF 6" OF SLACK WHEN ATTACHED BETWEEN THE SIGN AND THE SIGN BASE. THE TETHERS AND BONDING CONDUCTORS SHALL BE OF SUFFICIENT LENGTH TO ALLOW THE FRANGIBLE COUPLINGS TO OPERATE WITHOUT RESTRICTIONS AND TO ALLOW THE POWER CABLE TO DISCONNECT IF THE SIGN FALLS OVER. THE SIGN ANCHOR BOLTS SHALL NOT BE USED FOR THE TETHER ANCHOR. THE TOP OF THE SIGN AND TETHER ANCHOR BOLTS SHALL NOT EXTEND ABOVE THE FRANGIBLE POINT ON THE FRANGIBLE COUPLING. IN ADDITION TO INSTALLING ONE TETHER PER MODULE A SIGN ARRAY SHALL BE EQUIPPED WITH A TETHER ON EACH END. ONE MODULE SIGNS SHALL BE EQUIPPED WITH TWO TETHERS.

5. SIGNS SHALL BE WELL SEALED AGAINST INFILTRATION BY WATER AND DIRT.

6. EACH NEW SIGN SHALL BE FURNISHED WITH AN ON-OFF TOGGLE SWITCH WITH WEATHERPROOF COVER. THE SWITCH SHALL BE USED BY MAINTENANCE PERSONNEL TO DE-ENERGIZE THE SIGN SO MAINTENANCE WORK CAN BE PERFORMED. THE SWITCH SHALL BE PHYSICALLY AND ELECTRICALLY LOCATED IMMEDIATELY ADJACENT TO THE LOAD SIDE OF THE L-823 DISCONNECT PLUG. WHEN THE SWITCH IS IN THE OFF POSITION THE SIGN SHALL BE ISOLATED FROM THE SERIES CIRCUIT AND THE SECONDARY OF THE L-830 ISOLATION TRANSFORMER SHALL BE SHORTED. THE WEATHERPROOF COVER SHALL PROVIDE PROTECTION FROM DRIVING RAIN, SNOW AND ICE, AND SHALL HAVE A SPRING OPERATED CLOSING DEVICE. THE WEATHERPROOF COVER SHALL ALSO PROVIDE PHYSICAL PROTECTION FOR THE SWITCH HANDLE.

7. RIGHT SIDE VIEW, SECTION A-A AND DETAILS A, & A1 ARE TYPICAL FOR ALL SIGNS ON ALL SIGN DETAIL SHEETS.

8. FOR LOCATION AND ORIENTATION OF SIGNS AND FOUNDATIONS, SEE PLANS. THE LOCATION SHOWN ON THE PLANS IS THE PERPENDICULAR DISTANCE FROM THE DEFINED TAXIWAY/RUNWAY EDGE OF FULL STRENGTH PAVEMENT, TO THE NEAR SIDE OF THE SIGN ON THE SIGN'S LONGITUDINAL CENTERLINE SIGN REFERENCE POINT ⊕ (SEE PLAN VIEW). EXISTING SIGNS TO BE MODIFIED SHALL EXPAND IN THE DIRECTION AWAY FROM THE RUNWAY OR TAXIWAY. ALL SIGNS SHALL BE INSTALLED WITH FIXTURE I.D. MARKERS.

9. ALL SIGNS SHALL BE ORIENTED SUCH THAT THE LONGITUDINAL CENTERLINE OF THE SIGN IS PERPENDICULAR TO THE RESPECTIVE TAXIWAY/RUNWAY CENTERLINE, UNLESS NOTED OTHERWISE.

10. ALL SIZE 2 TAXIWAY GUIDANCE SIGNS SHALL BE LOCATED 33' OFF THE EDGE OF FULL STRENGTH PAVEMENT, ALIGNED WITH THE POINT OF TANGENCY (PT), POINT OF CURVATURE (PC) AS SHOWN ON THE PLANS, UNLESS NOTED OTHERWISE.

11. THE ACTUAL SIGN DIMENSIONS WILL VARY PER MANUFACTURER. THE BASE SIZE AS SHOWN SHALL BE ADJUSTED TO MATCH THE SIGN SUBMITTED. THE SUBMITTAL SHALL INCLUDE NEW BASE DIMENSIONS, LAYOUT, ETC. THE SIGN LEGEND (MESSAGE) SHALL BE CENTERED IN THEIR RESPECTIVE PANELS.

12. THE CONCRETE BASE SHALL EXTEND 3'-0" BEYOND EACH SIDE OF THE SIGN. THE EDGE OF THE CONCRETE BASE SHALL EXTEND 20" BEYOND THE CENTERLINE OF THE L-867D BASE CAN.

13. ALL CONCRETE SHALL COMPLY WITH P-610 SPECIFICATION.

14. P-610 CONCRETE STEEL REINFORCEMENT SHALL BE TYPE ASTM A615 GRADE 60. ALL REINFORCEMENT SHALL HAVE A 2" MINIMUM CONCRETE COVER. REINFORCEMENTS MAY BE ADJUSTED TO MISS INTERFERENCES.

15. ALL AREAS FOR THE LEG FLANGE PLATES SHALL BE IN THE SAME PLANE. THE ANCHOR BOLTS SHALL BE A-36 STEEL, HOT DIP GALVANIZED WHEN CAST INTEGRALLY WITH THE CONCRETE PAD OR 1/2" X 6" STAINLESS STEEL HILTI (HAS RODS) HIT RE500 ADHESIVE ANCHORS OR ACCEPTED EQUIVALENT WHEN USED ON EXISTING OR DRILLED INTO NEW CONCRETE PADS.

16. SODDING OF DISTURBED AREAS SHALL BE INCLUDED IN THE INDIVIDUAL SIGN PAY ITEM. EXCAVATION, GRADING FILL ETC. FOR THE SIGNS IS INCIDENTAL TO THE SIGN PAY ITEM.

17. THE ORIENTATION, INSTALLATION, AND DEPTH OF THE 2" CONDUIT SHALL BE COORDINATED WITH THE PLANS. EXISTING SLEEVES MAY BE USED FOR ENTRY TO MANHOLES. IF NO SLEEVES ARE AVAILABLE CONTRACTOR SHALL CORE MANHOLE WALL.

18. ALL CONDUIT SHALL BE 2" SCHEDULE 40 PVC EXCEPT THE RGS COUPLINGS AND 6" RGS NIPPLE AT SIGN POWER LEG. (SEE DETAIL "A" OR "A1")

19. EACH ABANDONED CONDUIT AND DUCT SHALL BE WATERPROOF SEALED WITH POLYURETHANE FOAM AT BOTH ENDS. THE SEAL SHALL BE 1" THICK MIN. AND REMOVABLE FOR FUTURE USE. THE END OF THE ABANDONED CONDUIT OR DUCT SHALL BE MARKED WITH AN END OF DUCT MARKER. THE EXACT LOCATION OF EACH ABANDONED CONDUIT AND DUCT SHALL BE SURVEYED AND RECORDED ON THE RECORD DRAWINGS.

20. GROUND RODS SHALL BE 3/4 INCH DIAMETER, 10 FEET LONG, COPPER CLAD STEEL SECTIONAL RODS. EACH GROUND ROD SHALL BE INDIVIDUALLY TESTED PRIOR TO CONNECTION TO THE GROUND GRID OR COUNTERPOISE. EACH INDIVIDUAL ROD SHALL HAVE AN EARTH RESISTANCE OF 10 OHMS OR LESS PRIOR TO CONNECTION TO COUNTERPOISE OR GROUND GRID. ADDITIONAL SECTIONS SHALL BE ADDED TO THE ROD TO ACHIEVE THE 10 OHM REQUIREMENT.

21. THE #2 AWG SOLID COPPER BONDING CONDUCTOR AND SIGN TETHER SHALL NOT BE ATTACHED AT THE SAME BOLT. AN APPROVED MECHANICAL OR COMPRESSION LUG SHALL BE USED TO CONNECT THE BONDING CONDUCTOR TO THE SIGN.

22. INSTALL TWO SS FENDER WASHERS, 0.062" THICK, BETWEEN EACH ANCHOR BOLT NUT AND BASE FLANGE. SS FENDER WASHER OD SHALL BE 3/4" LARGER THAN NARROW DIMENSION OF SLOT IN BASE FLANGE. SUBMIT BASE FLANGE AND FENDER WASHERS WITH EQUIPMENT SUBMITTAL.

23. ALL UNUSED ANCHOR BOLTS IN REUSED PADS SHALL BE PULLED OUT TO THE GREATEST EXTENT POSSIBLE, CUT OFF FLUSH WITH THE PAD AND THEN DRIVEN TO THE BOTTOM OF THE HOLE. FILL HOLE WITH FIVE STAR EZ-CURE GROUT OR ACCEPTED EQUIVALENT.

24. FRANGIBLE CONNECTIONS SHALL BE IN ACCORDANCE WITH FEDERAL AVIATION ADMINISTRATION ADVISORY CIRCULAR AC 150/5220-23, CURRENT EDITION. FRANGIBLE COUPLINGS SHALL BE METALLIC AND PROVIDE AN ELECTRICAL BOND BETWEEN THE ITEM AND THE BASE. ALL FRANGIBLE POINTS SHALL BE NO HIGHER THAN 3" ABOVE GRADE IN ACCORDANCE WITH FAA ENGINEERING BRIEF 79, DETERMINING RSA NAVAID FRANGIBILITY AND FIXED-BY-FUNCTION REQUIREMENTS AND FAA ADVISORY CIRCULAR AC 150/5300-13, CURRENT EDITION.

25. AT EACH SIGN, IN THE SIGN LIGHT BASE, TAPE THE L-823 CONNECTOR BETWEEN THE L-830 SECONDARY CONNECTOR AND THE SECONDARY EXTENSION CABLE. DO NOT TAPE THE CONNECTION WITHIN THE FRANGIBLE COUPLING. FIRST – APPLY THREE LAYERS OF 2" WIDE 3M SCOTCH 130C LINERLESS RUBBER SPLICING TAPE OR ACCEPTED EQUIVALENT. WHEN APPLYING 130C TAPE STRETCH TO A MINIMUM OF 3/4 OF ITS ORIGINAL WIDTH TO PRODUCE A UNIFORM WIND. CENTER TAPE ON MATING SURFACES OF CONNECTOR BODY. EXTEND TAPE 1.5" ON BOTH SIDES OF CONNECTOR BODY MATING SURFACES. SECOND – APPLY THREE HALF-LAPPED LAYERS OF 3M SCOTCH 88 TAPE OR ACCEPTED EQUIVALENT. WHEN APPLYING 88 TAPE STRETCH TO A MINIMUM OF 5/8 OF ITS ORIGINAL WIDTH TO PRODUCE A UNIFORM WIND. APPLY TAPE WITH NO TENSION ON LAST WRAP TO PREVENT FLAGGING. EXTEND SCOTCH 88 TAPE 3" ON BOTH SIDES OF CONNECTOR BODY MATING SURFACES.

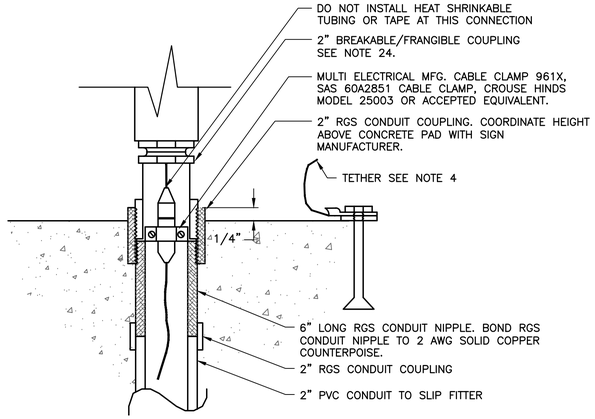

DETAIL "A"
N.T.S.

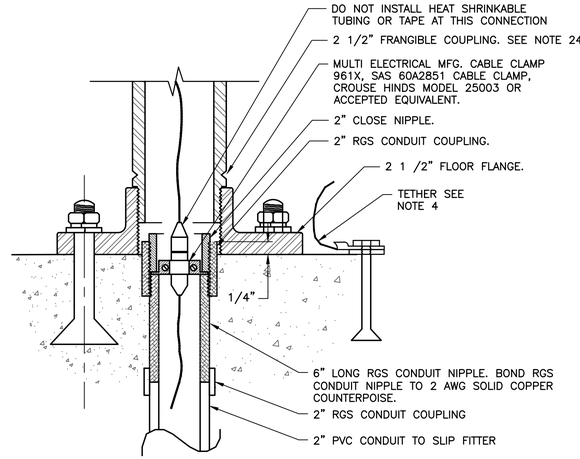

DETAIL "A1"
N.T.S.

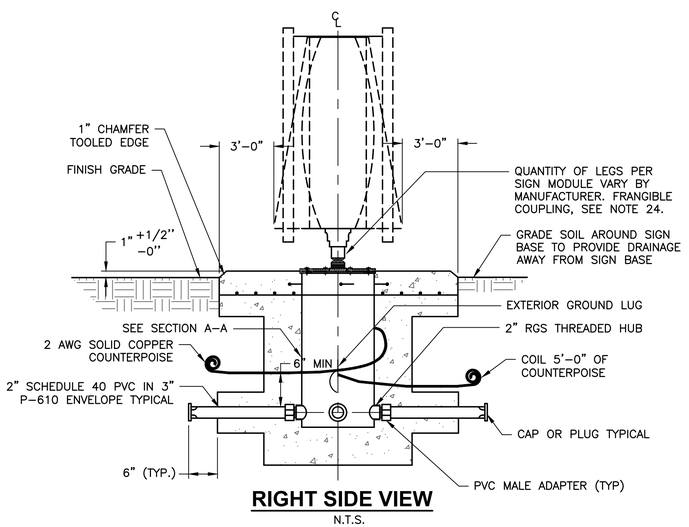

RIGHT SIDE VIEW
N.T.S.

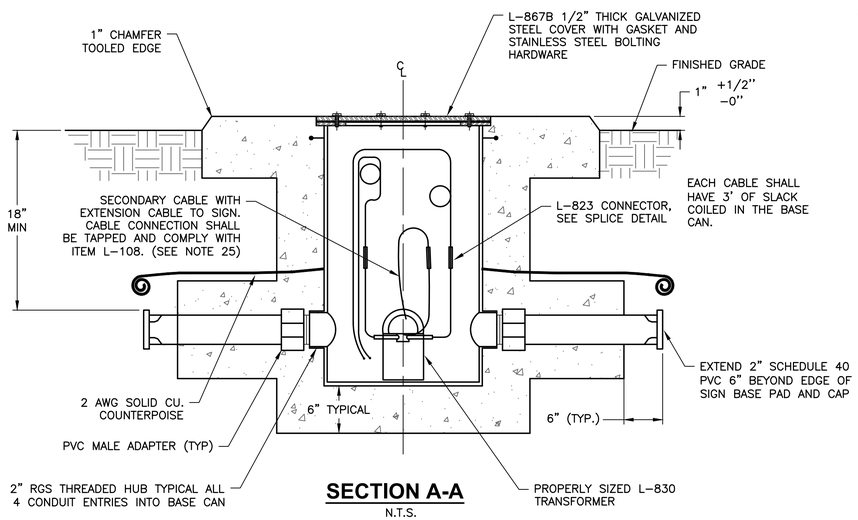

SECTION A-A
N.T.S.

AVCON
TRANSFORMING TODAY'S IDEAS INTO TOMORROW'S REALITY

NO.	DATE	REVISION	BY

SIGN NOTES

RELEASE FOR BID

AIRPORT TERMINAL AND HANGAR DEVELOPMENT

PREPARED FOR

DEFUNIAK SPRINGS MUNICIPAL AIRPORT

DESIGNED BY:	S.H.
DRAWN BY:	S.H.
CHECKED BY:	M.G.
APPROVED BY:	V.L.
PROJECT NO:	2019.028.01
DATE:	NOVEMBER 1, 2021

SHEET NUMBER
E-503

THIS DOCUMENT CONTAINS PRIVILEGED AND PROPRIETARY INFORMATION, ALL OF WHICH IS EXPRESSLY PROVIDED BY AVCON, INC., FOR USE BY THE INTENDED RECIPIENT, AND FOR A SPECIFIC PURPOSE. WITHOUT THE EXPRESS WRITTEN CONSENT OF AVCON, INC. ANY DISTRIBUTION, REPRODUCTION, OR OTHER USE OF THIS DOCUMENT, IN WHOLE OR IN PART, IS STRICTLY PROHIBITED

V:\2019\2019.028.01 – DEFUNIAK SPRINGS TWA TERMINAL NV FILES\000 CAD\1902801 E503_SIGN NOTES.DWG 1/18/2022 5:16 PM

ARROW ROTATION ANGLE DATA AS VIEWED LOOKING AT SIGN FACE

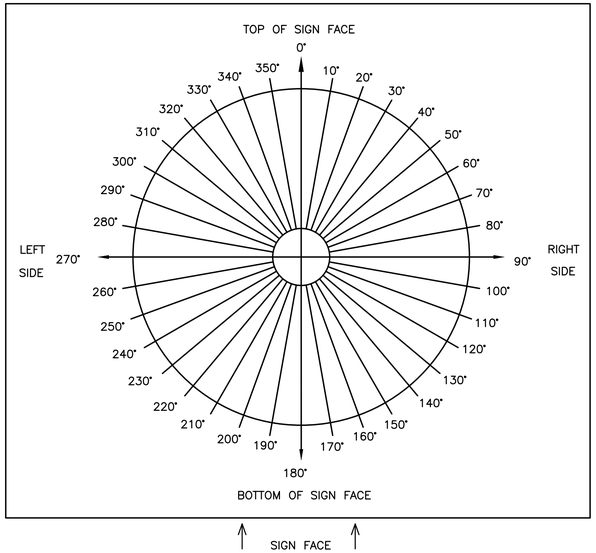

THE NUMBER BELOW THE ARROWS IN THE TEXT COLUMN REPRESENTS THE ARROWS ROTATION PER THE ABOVE DETAIL. ARROWS SHALL BE ALIGNED WITHIN ±2° OF ANGLE LISTED IN THE SIGN SCHEDULE. ARROWS WITH NO DEGREE GIVEN ARE AT EVEN 90° INCREMENTS.

SIDE 2

END TOWARD T/W OR R/W

SIDE 1

INDICATES MESSAGE DIVIDER

TYPE DESIGNATIONS:

L = L–858L LOCATION SIGN

Y = L–858Y DIRECTION, DESTINATION OR BOUNDARY SIGN

R = L–858R MANDATORY INSTRUCTION SIGN

= BLANK SIGN PANEL WITHOUT MESSAGE

P = POWER PLUG LEG LOCATION

NOTE:

**** SEE SIGN DETAILS SHEET E-503 FOR APPLICABLE NOTES.**

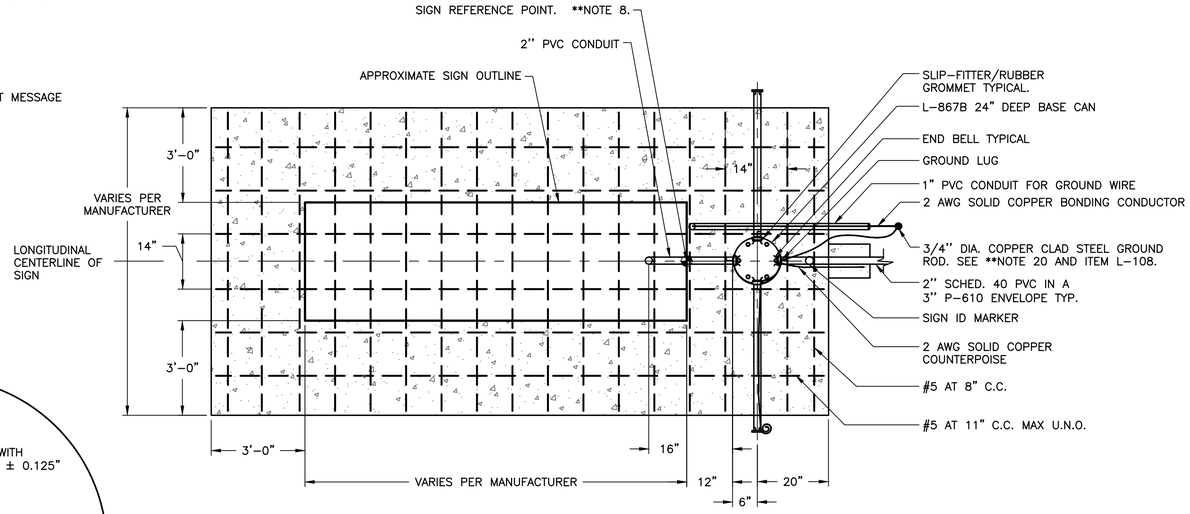

TWO MODULE SIGN PLAN VIEW

N.T.S.

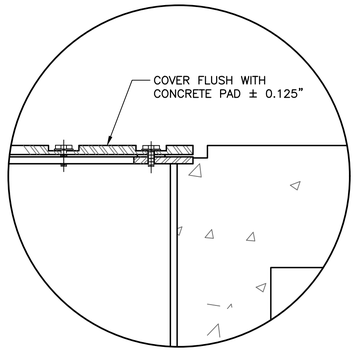

DETAIL "B"

N.T.S.

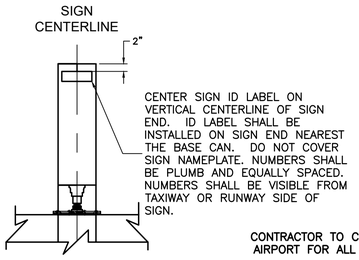

RIGHT SIDE VIEW

N.T.S.

CONTRACTOR TO COORDINATE WITH AIRPORT FOR ALL SIGN NUMBERS

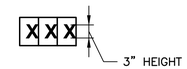

WHITE NON–REFLECTIVE NUMBERS ON BLACK BACKGROUND, SIMILAR TO BRADY 9750 OR ACCEPTED EQUIVALENT

ADHESIVE I.D. LABEL (TYP.)

N.T.S.

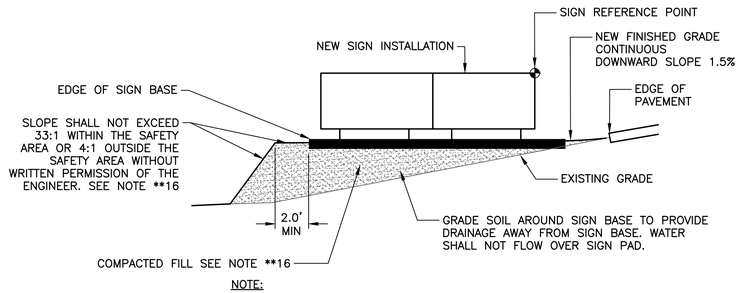

NOTE:

EXCAVATION, GRADING, SITE PREPARATION, FILL, SOD, ETC. FOR SIGNS IS INCIDENTAL TO THE SIGN PAY ITEM.

GRADING AND FILL DETAIL

N.T.S.

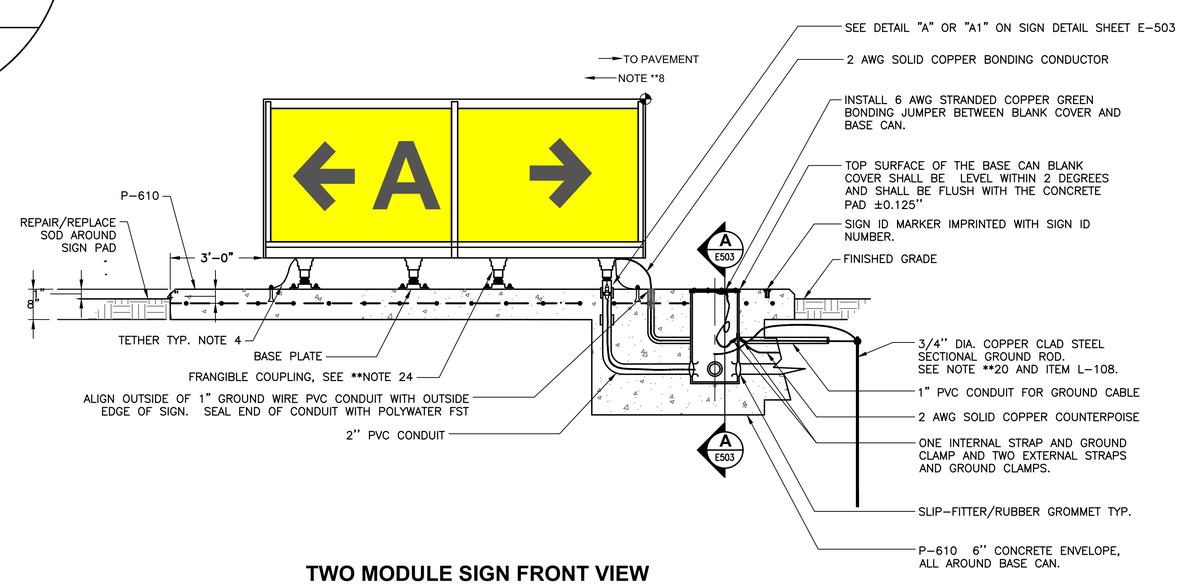

TWO MODULE SIGN FRONT VIEW

N.T.S.

AVCON

TRANSFORMING TODAY'S IDEAS INTO TOMORROW'S REALITY

THIS DOCUMENT CONTAINS PRIVILEGED AND PROPRIETARY INFORMATION, ALL OF WHICH IS EXPRESSLY PROVIDED BY AVCON, INC., FOR USE BY THE INTENDED RECIPIENT, AND FOR A SPECIFIC PURPOSE. WITHOUT THE EXPRESS WRITTEN CONSENT OF AVCON, INC, ANY DISTRIBUTION, REPRODUCTION, OR OTHER USE OF THIS DOCUMENT, IN WHOLE OR IN PART, IS STRICTLY PROHIBITED

NO.	DATE	REVISION	BY

SIGN DETAILS (SHEET 1 OF 2)

RELEASE FOR BID

AIRPORT TERMINAL AND HANGAR DEVELOPMENT

PREPARED FOR

DEFUNIAK SPRINGS MUNICIPAL AIRPORT

DESIGNED BY:	S.H.
DRAWN BY:	S.H.
CHECKED BY:	M.G.
APPROVED BY:	V.L.
PROJECT NO:	2019.028.01
DATE:	NOVEMBER 1, 2021

SHEET NUMBER

E-504

V:\2019\2019.028.01 – DEFUNIAK SPRINGS TWA TERMINAL NV FILES\000 CAD\1902801 E504_SIGN DETAILS 1.DWG 1/18/2022 5:16 PM

NOTE:

**** SEE SIGN DETAILS SHEET E503 FOR APPLICABLE NOTES.**

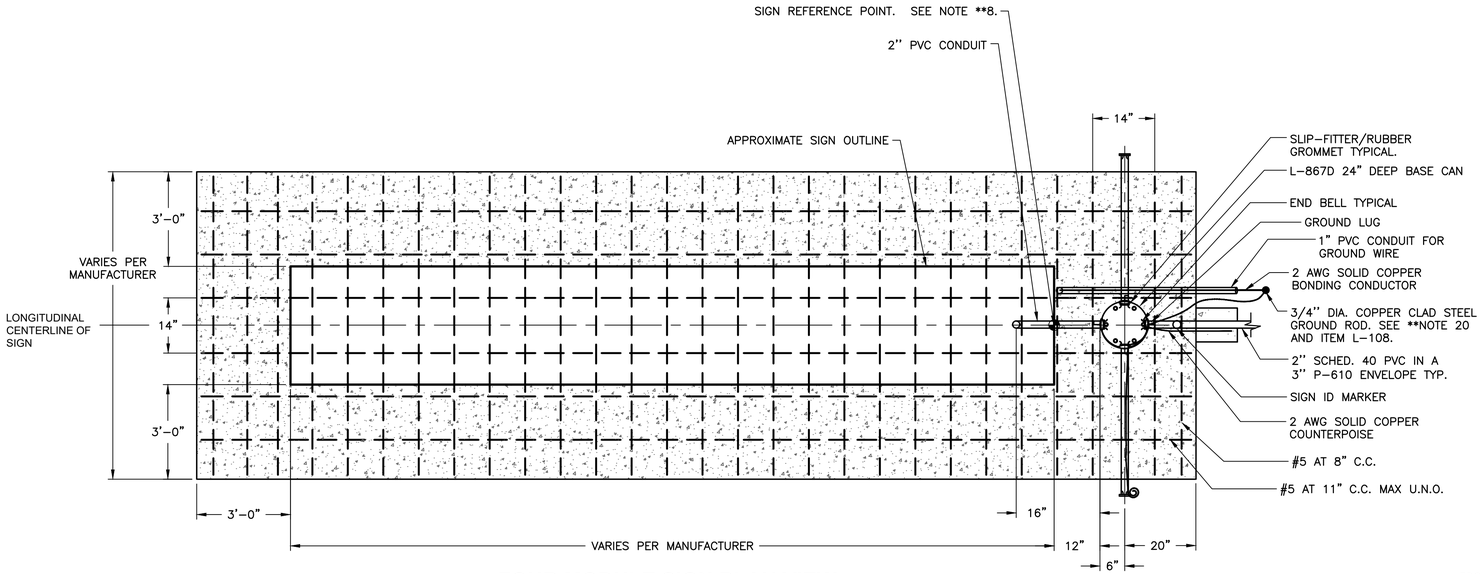

FOUR MODULE SIGN PLAN VIEW

N.T.S.

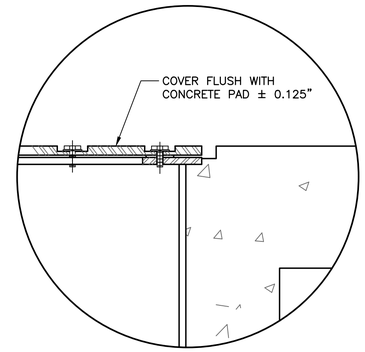

DETAIL "B"

N.T.S.

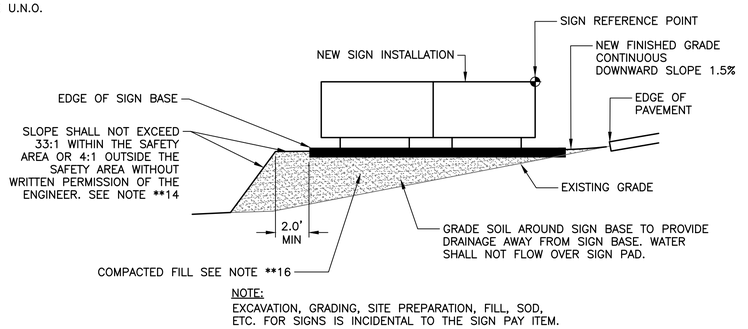

NOTE:
EXCAVATION, GRADING, SITE PREPARATION, FILL, SOD, ETC. FOR SIGNS IS INCIDENTAL TO THE SIGN PAY ITEM.

GRADING AND FILL DETAIL

N.T.S.

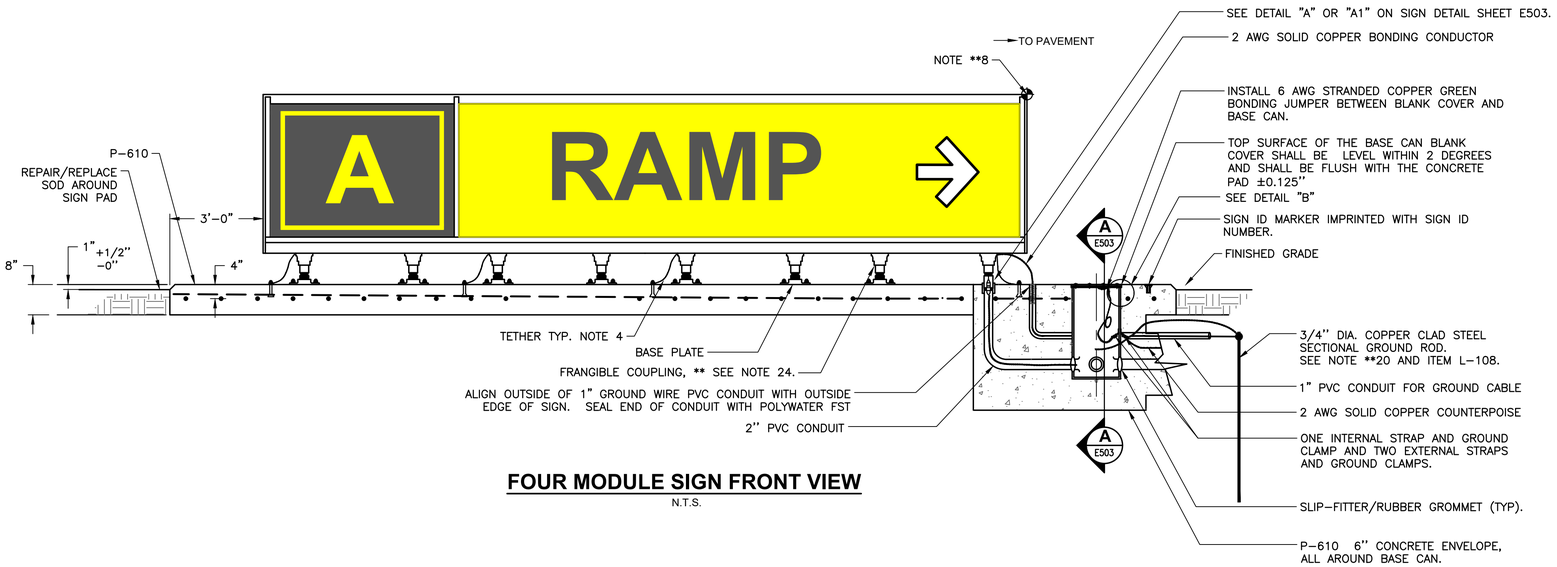

FOUR MODULE SIGN FRONT VIEW

N.T.S.

AVCON

TRANSFORMING TODAY'S IDEAS INTO TOMORROW'S REALITY

NO.	DATE	REVISION	BY

SIGN DETAILS (SHEET 2 OF 2)

RELEASE FOR BID

AIRPORT TERMINAL AND HANGAR DEVELOPMENT

PREPARED FOR

DEFUNIAK SPRINGS MUNICIPAL AIRPORT

DESIGNED BY:	S.H.
DRAWN BY:	S.H.
CHECKED BY:	M.G.
APPROVED BY:	V.L.
PROJECT NO:	2019.028.01
DATE:	NOVEMBER 1, 2021

SHEET NUMBER

E-505

THIS DOCUMENT CONTAINS PRIVILEGED AND PROPRIETARY INFORMATION, ALL OF WHICH IS EXPRESSLY PROVIDED BY AVCON, INC., FOR USE BY THE INTENDED RECIPIENT, AND FOR A SPECIFIC PURPOSE. WITHOUT THE EXPRESS WRITTEN CONSENT OF AVCON, INC, ANY DISTRIBUTION, REPRODUCTION, OR OTHER USE OF THIS DOCUMENT, IN WHOLE OR IN PART, IS STRICTLY PROHIBITED

V:\2019\2019.028.01 - DEFUNIAK SPRINGS TWA TERMINAL NV FILES\000 CAD\190201 E505_SIGN DETAILS 2.DWG 1/18/2022 5:17 PM

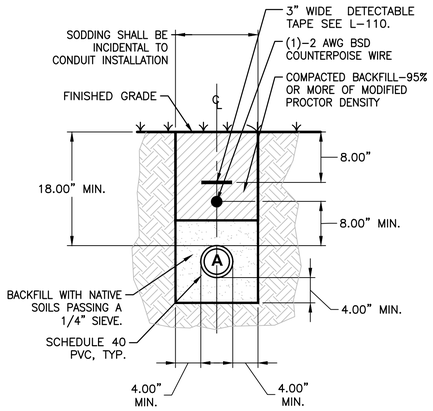

1 WAY DUCT BANK DIRECT BURIED IN TURFED AREAS

NTS

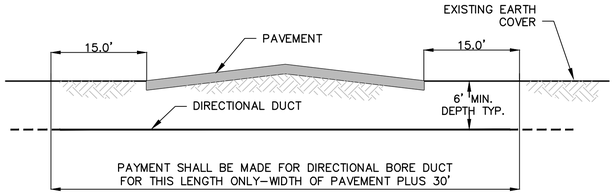

NOTE:

DIRECTIONAL BORE DUCT NOT ACHIEVING PROPER MINIMUM DEPTH SHALL NOT BE PAID FOR. DIRECTIONAL BORE DUCT MORE THAN 15' OUTSIDE THE PAVEMENT EDGE AT PROPER DEPTH MAY BE INCORPORATED INTO THE WORK BUT SHALL BE PAID FOR AS FINISHED DIRECT BURIED DUCT. INSTALL 2 AWG BARE SOLID COPPER COUNTERPOISE WITH DIRECTIONAL BORE DUCT-EXTERNAL TO DUCT.

DIRECTIONAL BORE DUCT PAYMENT DETAIL

N.T.S.

NOTES:

1. IF DUCT IS LOCATED IN EXISTING PAVEMENT TO BE OVERLAYED. BACKFILL TRENCH WITH CONCRETE TO TOP OF EXISTING PAVEMENT SURFACE ONCE CONCRETE IS CURED MILL PAVEMENT. INSTALL PAVEMENT REINFORCEMENT MESH, GLAS PAVE 25 BY SAINT GOBAIN TECHNICAL FABRICS OR ACCEPTED EQUIVALENT, OVER TRENCH. PAVEMENT REINFORCEMENT MESH SHALL EXTEND 12" BEYOND TRENCH WALL ON EACH SIDE OF TRENCH. IF DUCT IS LOCATED UNDER NEW PAVEMENT OR TURFED AREAS, BACKFILL SHALL COMPLY WITH CONTRACT DOCUMENTS. FABRIC IS INCIDENTAL TO THE WORK.
2. GRADING, SODDING, AREA RESTORATION, AND DEWATERING FOR THE INSTALLATION OF BASE CANS, MANHOLES, DUCT BANKS OR CONDUITS IS INCIDENTAL TO THE RESPECTIVE PAY ITEM. THE CONTRACTOR SHALL BE RESPONSIBLE TO PAY FOR AND OBTAIN ANY AND ALL PERMITS REQUIRED FOR DEWATERING.
3. THE CONCRETE AROUND CONDUITS, DUCTS AND BASE CANS SHALL BE COMPLETELY CONSOLIDATED BY MECHANICAL MEANS AND SHALL BE FREE OF ANY VOIDS.
4. ALL DUCTS SHALL BE SECURELY FASTENED IN PLACE DURING CONSTRUCTION AND PROGRESS OF THE WORK AND SHALL BE PLUGGED TO PREVENT SEEPAGE OF GROUT, WATER OR DIRT. ANY DUCT SECTION HAVING A DEFECTIVE JOINT SHALL NOT BE INSTALLED. DUCTS SHALL BE SUPPORTED AND SPACED APART USING APPROVED SPACERS AT INTERVALS NOT TO EXCEED 5 FEET.
5. ALL CONSTRUCTION JOINTS IN CONCRETE ENCASED DUCTS SHALL HAVE STEEL DOWELS, SPACED AS SHOWN AND INSTALLED AT THE JOINT. THE DOWELS SHALL BE SIZED AS NOTED IN DETAILS. THE DEFORMED STEEL REINFORCING BARS, SHALL BE 24" LONG, WITH 1/2 OF THE LENGTH EMBEDDED IN THE PLASTIC CONCRETE THAT IS CONSTRUCTED INITIALLY.
6. DIRECTIONAL BORED DUCTS SHALL BE INSTALLED BELOW THE PAVING SUBGRADE AND EXISTING UTILITIES. DIRECTIONAL BORING IS REQUIRED FOR ALL DUCTS UNDER EXISTING PAVEMENT THAT IS NOT SCHEDULED FOR MILLING OPERATIONS. THE ADDITIONAL COST FOR DIRECTIONAL BORING SHALL BE INCIDENTAL TO THE WORK.

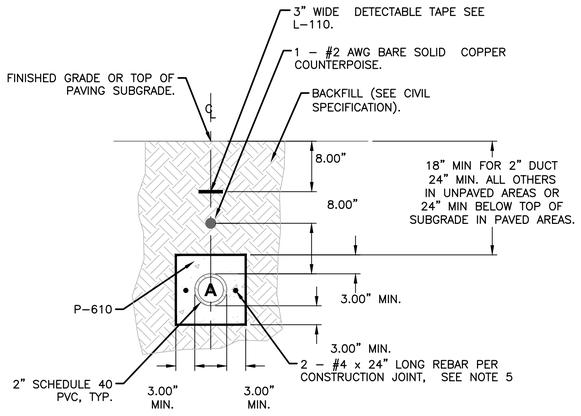

1 WAY 2" DUCT CONCRETE ENCASED

NTS

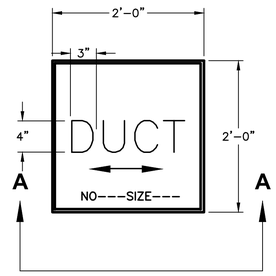

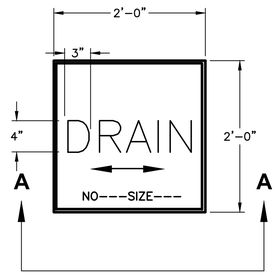

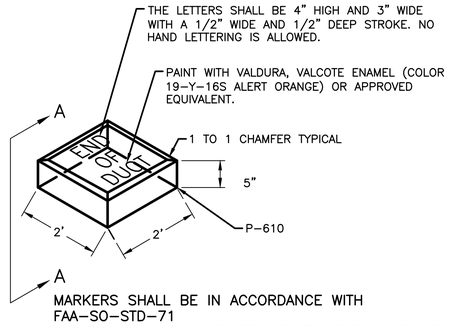

MARKERS SHALL BE IN ACCORDANCE WITH FAA-SO-STD-71

END OF DUCT/CABLE MARKER DETAIL

N.T.S.

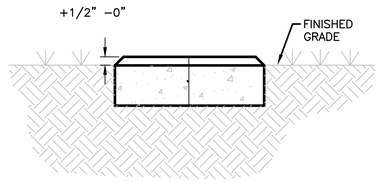

SECTION A-A

N.T.S.

AVCON

TRANSFORMING TODAY'S IDEAS INTO TOMORROW'S REALITY

NO.	DATE	REVISION	BY

DUCT BANK DETAILS (SHEET 1 OF 2)

RELEASE FOR BID

AIRPORT TERMINAL AND HANGAR DEVELOPMENT

PREPARED FOR

DEFUNIAK SPRINGS MUNICIPAL AIRPORT

DESIGNED BY:	S.H.
DRAWN BY:	S.H.
CHECKED BY:	M.G.
APPROVED BY:	V.L.
PROJECT NO:	2019.028.01
DATE:	NOVEMBER 1, 2021

SHEET NUMBER

E-506

THIS DOCUMENT CONTAINS PRIVILEGED AND PROPRIETARY INFORMATION, ALL OF WHICH IS EXPRESSLY PROVIDED BY AVCON, INC., FOR USE BY THE INTENDED RECIPIENT, AND FOR A SPECIFIC PURPOSE. WITHOUT THE EXPRESS WRITTEN CONSENT OF AVCON, INC. ANY DISTRIBUTION, REPRODUCTION, OR OTHER USE OF THIS DOCUMENT, IN WHOLE OR IN PART, IS STRICTLY PROHIBITED

V:\2019\2019.028.01 - DEFUNIAK SPRINGS TWA TERMINAL NV FILES\000 CAD\1902801.E506_DUCT BANK 1.DWG 1/18/2022 5:17 PM

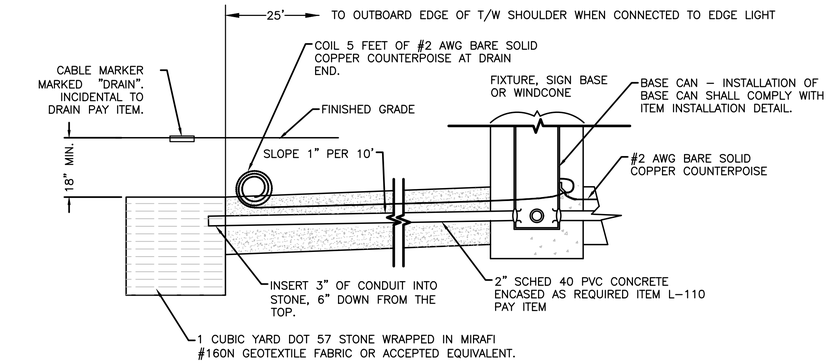

BASE CAN DRAIN WELL DETAIL

N.T.S.

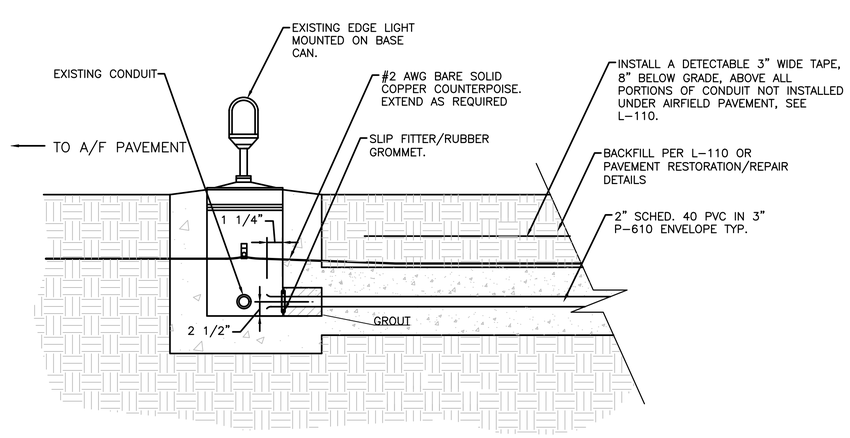

1. USE 5" DIAMETER CORE DRILL TO PENETRATE BASE CAN ANCHOR.
2. USE 2.75" DIAMETER HOLE SAW TO CUT HOLE IN BASECAN. REPAIR DAMAGED GALVANIZED SURFACES PER SPECIFICATION L–100. PROTECT EXISTING CABLES, TRANSFORMERS, ETC., FROM DAMAGE.
3. TERMINATE CONDUIT IN BASE CAN UTILIZING AN ENDBELL AND SLIP FITTER/RUBBER GROMMET.
4. GROUT SHALL CONSIST OF ONE PART PORTLAND CEMENT AND TWO PARTS SAND. THE PORTLAND CEMENT SHALL CONFORM TO THE REQUIREMENTS OF ASTM C 150, TYPE 1. THE SAND SHALL CONFORM TO THE REQUIREMENTS OF ASTM C 144. GROUT SHALL BE COMPLETELY CONSOLIDATED AROUND CONDUIT OPENING.
5. FOR EDGE LIGHTS LOCATED IN SHOULDER PAVEMENT, SEE PAVEMENT RESTORATION/REPAIR DETAILS.

EXTENDING DUCT/CONDUIT FROM EXISTING EDGE LIGHT

V:\2019\2019.028.01 – DEFUNIAK SPRINGS TWA TERMINAL NV FILES\000 CAD\1902801.E507_DUCT BANK 2.DWG 1/18/2022 5:17 PM

AVCON

TRANSFORMING TODAY'S IDEAS INTO TOMORROW'S REALITY

NO.	DATE	REVISION	BY

DUCT BANK DETAILS (SHEET 2 OF 2)

RELEASE FOR BID

AIRPORT TERMINAL AND HANGAR DEVELOPMENT

PREPARED FOR

DEFUNIAK SPRINGS MUNICIPAL AIRPORT

DESIGNED BY:	S.H.
DRAWN BY:	S.H.
CHECKED BY:	M.G.
APPROVED BY:	V.L.
PROJECT NO:	2019.028.01
DATE:	NOVEMBER 1, 2021

SHEET NUMBER

E-507

THIS DOCUMENT CONTAINS PRIVILEGED AND PROPRIETARY INFORMATION, ALL OF WHICH IS EXPRESSLY PROVIDED BY AVCON, INC., FOR USE BY THE INTENDED RECIPIENT, AND FOR A SPECIFIC PURPOSE. WITHOUT THE EXPRESS WRITTEN CONSENT OF AVCON, INC. ANY DISTRIBUTION, REPRODUCTION, OR OTHER USE OF THIS DOCUMENT, IN WHOLE OR IN PART, IS STRICTLY PROHIBITED

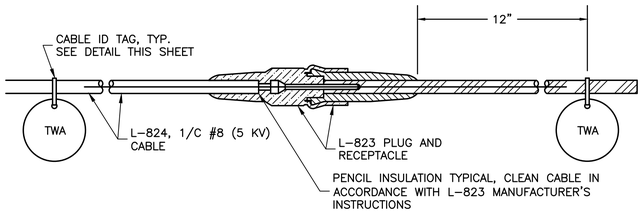

TYPICAL L-824 (5 kV) CABLE L-823 CONNECTOR DETAIL

N.T.S.

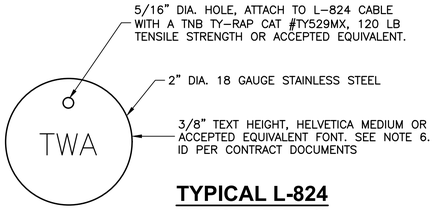

TYPICAL L-824 CABLE ID TAG

N.T.S.

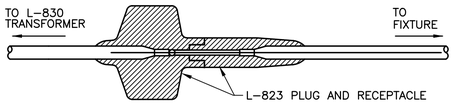

TYPICAL L-824 SECONDARY CABLE CONNECTOR DETAIL

N.T.S.

CONNECTOR NOTES:

COORDINATE CABLE O.D. WITH CONNECTOR KIT TO ASSURE PROPER AND WATERTIGHT FIT. DO NOT USE HEAT SHRINK TUBING OR TAPE ON THE SECONDARY OF THE L-830 TRANSFORMER ON ELEVATED FIXTURES. INSTALL TWO HALF-LAPPED LAYERS OF SCOTCH 88 OVER THE CONNECTOR ON SEMIFLUSH FIXTURES.

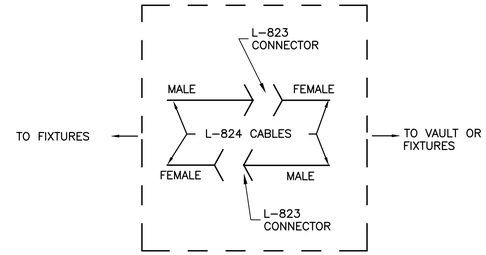

TYPICAL L-823 CONNECTOR SCHEMATIC

N.T.S.

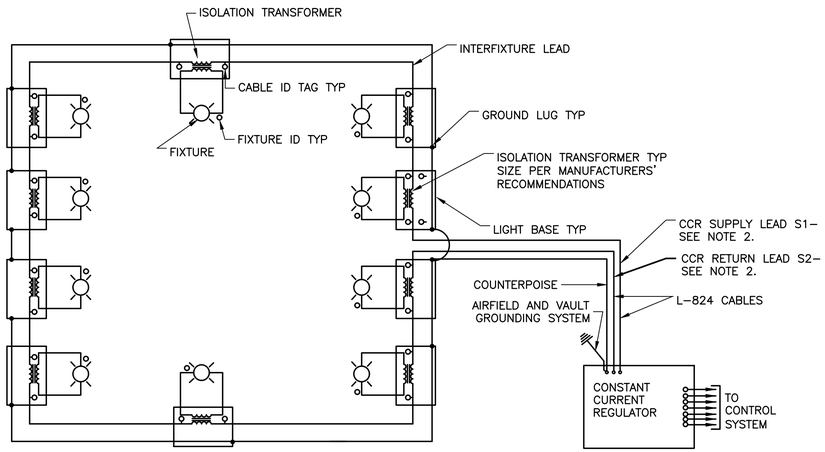

NOTE:

1. L-823 CONNECTORS NOT SHOWN FOR CLARITY.

TYPICAL SERIES LIGHTING CIRCUIT

N.T.S.

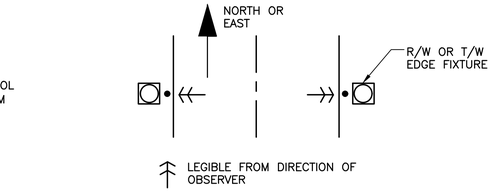

FIXTURE ID ORIENTATION

N.T.S.

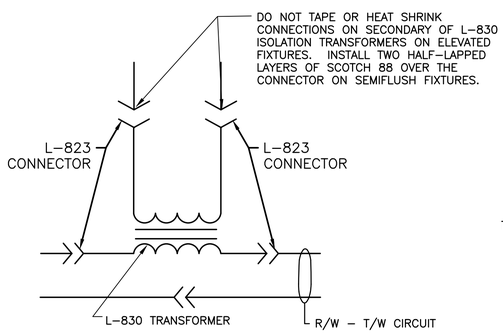

LIGHTING CONNECTION SCHEMATIC

N.T.S.

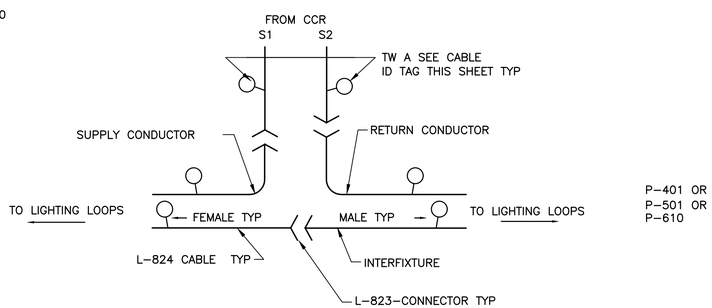

TYPICAL L-824 CABLE TAGGING AND L-823 CONNECTOR INSTALLATION SEE NOTES

N.T.S.

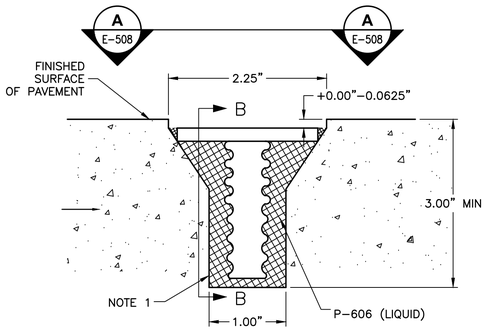

ID MARKER DETAIL FOR ALL ITEMS INSTALLED IN FULL STRENGTH PAVEMENT

N.T.S.

NOTES:

1. L-823 CONNECTORS SHALL BE USED FOR ALL AIRFIELD LIGHTING CABLE TERMINATIONS. L-823 CONNECTORS SHALL BE INSTALLED IN EACH CABLE CONNECTING TO A L-830 ISOLATION TRANSFORMER, LIGHTING FIXTURE, SIGN, WIND CONE, ETC. A L-823 CONNECTOR SHALL ONLY BE INSTALLED WHERE CONNECTIONS TO DEVICES ARE MADE. L-823 CONNECTORS SHALL NOT BE INSTALLED IN THE CONDUCTORS PULLED THROUGH A LIGHT BASE OR HOME RUN CONDUCTORS (SUPPLY OR RETURN) EXCEPT AT TEST POINTS AS NOTED IN THE CONTRACT DOCUMENTS.
2. L-823 CONNECTORS SHALL BE INSTALLED SO A PORTION OF THE LOOP CAN BE BYPASSED. THE FEMALE RECEPTACLE SHALL ALWAYS BE CONNECTED TO THE END OF THE CONDUCTOR CONNECTED TO THE S1 (SUPPLY) TERMINAL OF THE CCR. THE MALE PLUG SHALL ALWAYS BE CONNECTED TO THE END OF THE CONDUCTOR CONNECTED TO THE S2 (RETURN) TERMINAL OF THE CCR.
3. THE LOCATION OF ANY ADDITIONAL CONNECTORS INSTALLED BY THE CONTRACTOR DUE TO CABLE PULL LENGTHS OR UNIQUE FIELD CONDITIONS SHALL BE RECORDED ON THE RECORD DRAWINGS.
4. THE CONTRACTOR SHALL FURNISH AND INSTALL AN ADDITIONAL 25 L-823 CONNECTOR KITS AT SPECIFIC LOCATIONS AS REQUESTED BY THE OWNER. ANY OF THE 25 L-823 CONNECTOR KITS REMAINING AT THE END OF THE CONTRACT AND NOT INSTALLED SHALL BE TURNED OVER TO THE OWNER THROUGH THE OAR. THE 25 L-823 CONNECTORS ARE IN ADDITION TO ANY AND ALL CONNECTORS REQUIRED FOR CONSTRUCTION OR MAINTENANCE OF THE AIRFIELD LIGHTING SYSTEMS. THE COST OF THE CONNECTORS IS INCIDENTAL TO THE L-108 CABLE PAY ITEM.
5. EACH END OF A CONDUCTOR WITH A L-823 CONNECTOR SHALL HAVE THREE FEET OF SLACK IN EACH LIGHT BASE (6 FEET TOTAL WHEN CONNECTED). A CONDUCTOR WITHOUT A L-823 CONNECTOR SHALL HAVE SIX FEET OF SLACK COILED IN THE LIGHT BASE.
6. ALL L-824 CABLES SHALL BE IDENTIFIED WITH AN 18-GAUGE, 2" DIAMETER STAINLESS STEEL ID TAG ENGRAVED OR LASER ETCHED WITH ITS RESPECTIVE CIRCUIT/LOOP NUMBER AT ALL ACCESSIBLE LOCATIONS. ACCESSIBLE LOCATIONS ARE DEFINED IN THE NEC. ATTACH ID TAG 12 INCHES FROM THE L-823 CONNECTORS. CABLES SHALL BE IDENTIFIED ON EACH SIDE OF A CONNECTOR IN ACCORDANCE WITH THE CONTRACT DOCUMENTS. WHERE NO CONNECTORS ARE INSTALLED, INSTALL TWO CABLE ID TAGS. ONE ON EACH SIDE OF WHERE A FUTURE CONNECTOR WOULD BE INSTALLED. CIRCUIT/LOOP NUMBERS SHALL BE ENGRAVED OR LASER ETCHED AND BLACK FILLED INTO THE STAINLESS STEEL TAGS WITH, 3/8" LETTER HEIGHT, HELVETICA MEDIUM OR ACCEPTED EQUIVALENT FONT. THE CONTRACTOR'S SUBMITTAL SHALL INCLUDE TWENTY-FOUR ID TAGS STAMPED WITH THE CHARACTERS "TW A". PARTIAL ACCEPTANCE OF THE TWENTY-FOUR ID TAGS WILL REQUIRE RESUBMITTAL OF THE UNACCEPTABLE ID TAGS PRIOR TO CONSTRUCTION BEGINNING. ONCE THE TAGS ARE ACCEPTED, THE ENGINEER WILL USE THEM AS A BASIS OF ACCEPTANCE FOR THE FIELD INSTALLED ID TAGS.
7. FURNISHING AND INSTALLING ALL L-823 CONNECTORS, TAPE, STAINLESS STEEL ID TAGS, NUMBERED L-824 CABLE, TY-RAPS, AND ALL APPURTENANCES ARE INCIDENTAL TO THE RESPECTIVE CABLE PAY ITEM OF WHICH IT IS A COMPONENT PART.
8. ALL LIGHT BASE AND DUCT BANK COUNTERPOISE CONDUCTORS SHALL BE BONDED AT EACH CROSSING OF THE GROUND GRID AND SHALL BE BONDED TO A DRIVEN GROUND ROD AT 500' MAXIMUM INTERVALS.
9. EACH GROUND ROD SHALL MEASURE 10 OHMS OR LESS, PRIOR TO CONNECTION TO THE GROUND SYSTEM. ADDITIONAL GROUND ROD SECTIONS SHALL BE ADDED TO OBTAIN THE 10 OHM VALUE.
10. L-823 "SUPER KITS" AND L-823 "COMPLETE KITS" HAVE BEEN SELECTED FOR USE ON THIS PROJECT. THESE KITS ARE EQUIPPED WITH A WATER SEAL FLAP/ROLL-OVER WATER SEAL FLAP. WHENEVER A NEW TERMINATION INVOLVING A SUPER KIT OR COMPLETE KIT CONNECTS TO AN EXISTING SYSTEM USING A CONVENTIONAL L-823 CONNECTOR, THE CONVENTIONAL L-823 CONNECTOR SHALL BE REMOVED AND REPLACED WITH A SUPER KIT/COMPLETE KIT TYPE L-823 CONNECTOR. WHENEVER A NEW TERMINATION INVOLVING A SUPER KIT OR COMPLETE KIT CONNECTS TO AN EXISTING L-830 ISOLATION TRANSFORMER USING A CONVENTIONAL L-823 CONNECTOR, THE L-830 ISOLATION TRANSFORMER USING A CONVENTIONAL L-823 CONNECTOR SHALL BE REMOVED AND REPLACED WITH A L-830 ISOLATION TRANSFORMER MOLDED FOR USE WITH A SUPER KIT/COMPLETE KIT TYPE L-823 CONNECTOR. THE COST OF REPLACING THE CONVENTIONAL CONNECTOR KIT OR CONVENTIONAL ISOLATION TRANSFORMER SHALL BE CONSIDERED INCIDENTAL TO THE L-108 CABLE PAY ITEM.

ID MARKER NOTES:

1. CLEAN HOLE WITH WIRE BRUSH AND DRY COMPRESSED AIR IMMEDIATELY PRIOR TO PLACING THE P-606. THE P-606 FILL TUBE SHALL BE KEPT WITHIN 1/8" OF THE BOTTOM OF THE DRILLED HOLE DURING FILLING TO PREVENT AIR ENTRAPMENT. INSTALL MARKER AND ROTATE 1/4 TURN. VOLUME OF P-606 USED SHALL BE SUFFICIENT TO ALLOW A SMALL AMOUNT TO SQUEEZE OUT EVENLY AROUND THE PERIMETER OF THE MARKER TOP. ANY OVER OR UNDER POURS SHALL BE CORRECTED IMMEDIATELY.
2. INSTALLATION OF ID MARKERS AND ENGRAVING OF ID'S ARE INCIDENTAL TO FIXTURE, DUCT, HANDHOLE/MANHOLE, CABLE, ETC., PAY ITEMS. TEXT FONT SHALL BE HELVETICA MEDIUM OR ACCEPTED EQUIVALENT.
3. THE P-606 SHALL BE COMPATIBLE WITH THE TYPE OF PAVEMENT AND ENVIRONMENT IN WHICH IT IS BEING USED. THE MARKER MAY BE PLACED IN WET CONCRETE AS IT IS BEING INSTALLED.
4. THE ID MARKER IS PERMITTED TO BE SEMI FLUSH MOUNTED IN AREAS OUTSIDE THE FULL STRENGTH PAVEMENT. DRILL A .75" DIA. HOLE 1/4" DEEPER THAN THE STEM ON THE ID MARKER. INSTALL EPOXY PER NOTE 1 ABOVE AND INSTALL MARKER.
5. CONTRACTOR SHALL COORDINATE ITEM/FIXTURE IDENTIFICATION/NUMBERING WITH AIRPORT.
6. BRASS MARKER SHALL BE M/M-B2 BY SURV-KAP OF TUCSON ARIZONA, MANUFACTURED OF B115 BRASS AND SHALL WEIGHT 0.50 POUNDS EACH OR ACCEPTED EQUIVALENT.

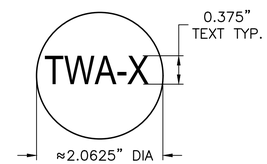

SECTION A-A

N.T.S.

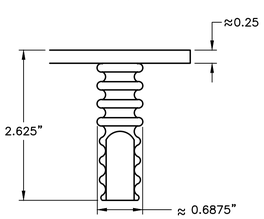

SECTION B-B

N.T.S.

AVCON

TRANSFORMING TODAY'S IDEAS INTO TOMORROW'S REALITY

NO.	DATE	REVISION	BY

WIRING DETAIL

RELEASE FOR BID

AIRPORT TERMINAL AND HANGAR DEVELOPMENT

PREPARED FOR

DEFUNIAK SPRINGS MUNICIPAL AIRPORT

DESIGNED BY:	S.H.
DRAWN BY:	S.H.
CHECKED BY:	M.G.
APPROVED BY:	V.L.
PROJECT NO:	2019.028.01
DATE:	NOVEMBER 1, 2021

SHEET NUMBER

E-508

THIS DOCUMENT CONTAINS PRIVILEGED AND PROPRIETARY INFORMATION, ALL OF WHICH IS EXPRESSLY PROVIDED BY AVCON, INC. FOR USE BY THE INTENDED RECIPIENT, AND FOR A SPECIFIC PURPOSE. WITHOUT THE EXPRESS WRITTEN CONSENT OF AVCON, INC. ANY DISTRIBUTION, REPRODUCTION, OR OTHER USE OF THIS DOCUMENT, IN WHOLE OR IN PART, IS STRICTLY PROHIBITED

X:\2019\2019.028.01 - DEFUNIAK SPRINGS TWA TERMINAL NV FILES\000 CAD\1902801.E508_WIRING DETAIL.DWG 1/18/2022 5:17 PM

CABLE PROTECTION CRITERIA:

1. ALL EXISTING SYSTEMS TO REMAIN SHALL BE PROTECTED FROM DAMAGE.
2. REFER TO EXISTING CONDITION AND DEMOLITION DRAWINGS FOR APPROXIMATE UTILITY LOCATIONS.
3. THE CONTRACTOR SHALL BE RESPONSIBLE TO CONTACT THE APPROPRIATE UTILITY, AGENCY ETC., PRIOR TO EVACUATION/CONSTRUCTION TO LOCATE THE UTILITIES, AGENCIES, UNDERGROUND CABLES, PIPE, CONDUITS, DUCTBANKS, ETC.. REPLACEMENT OF EXISTING CABLES OR UTILITIES SHALL SHALL BE AT THE CONTRACTORS EXPENSE.
4. ALL EXCAVATION WITHIN FIVE (5) FEET OF AN UNDERGROUND UTILITY SHALL BE PERFORMED BY HAND EXCAVATION METHODS. EXISTING DIRECT BURIED CABLE THAT IS TO REMAIN INTACT, FUNCTIONAL AND OPERATIONAL, SHALL BE ENCLOSED IN A CARLON SPLIT DUCT OR APPROVED EQUAL, AND ENCASED IN A 3" MIN ENVELOPE OF P–610 CONCRETE UNDER THE FOLLOWING CONDITIONS:
   A. WHEN WITHIN 20' OF EXCAVATION, TRENCHING ETC.
   B. WHEN PAVEMENT WIDENING OR EXTENSIONS WILL BE ROUTED OVER THE EXISTING CABLE. THE DUCT BANK SHALL BE EXTENDED 5' BEYOND THE NEW EDGE OF PAVEMENT.
   C. WHEN ENCOUNTERED DURING CONSTRUCTION.
   D. WHEN SUBJECT TO DAMAGE FROM CONSTRUCTION ACTIVITIES.
5. ALL EXCAVATION WITHIN 5' OF DIRECT BURIED CABLES SHALL BE BY HAND.
6. THE CABLE ELEVATION SHALL BE ADJUSTED SO THAT THE TOP OF THE DUCT CONCRETE ENCASEMENT 1S 1'–6" MINIMUM BELOW THE FINISHED GRADE OR TOP OF SUBGRADE WHICHEVER IS DEEPER. COORDINATE WITH GRADING AND DRAINAGE PLANS.
7. MULTIPLE CABLES SHALL BE PROTECTED WITH MULTIPLE SPLIT DUCTS WITH A MINIMUM SEPARATION OF 2" BETWEEN DUCTS. REFER TO DUCT BANK DETAILS FOR MULTIPLE DUCT CONFIGURATIONS. POWER AND LOW–VOLTAGE (ANALOG OR DIGITAL) CONTROL SHALL NOT BE GROUPED TOGETHER. EXISTING SEPARATIONS SHALL BE MAINTAINED.
8. INSTALL A PLASTIC, DETECTABLE, TAPE EIGHT INCHES (8") BELOW GRADE ABOVE ALL PORTIONS OF EXISTING UNDERGROUND UTILITIES EXPOSED FOR ANY REASON. THIS INCLUDES ALL CABLING INSTALLED IN SPLIT DUCT. THE DETECTABLE TAPE SHALL BE OMITTED WHERE THE UNDERGROUND UTILITY IS UNDER AIRFIELD PAVEMENT.
9. SEE DUCT DETAILS FOR COMPLETE SPLIT DUCT CONFIGURATION INCLUDING COUNTERPOISE, BACKFILL, ETC.
10. HAND DIGGING AND PROTECTION OF EXISTING SYSTEMS SHALL NOT BE PAID FOR SEPARATELY BUT SHALL BE CONSIDERED INCIDENTAL TO THE ITEM BEING INSTALLED.
11. AN END OF DUCT MARKER SHALL BE INSTALLED ABOVE EACH END OF THE SPLIT DUCT.

RECOMMENDED SPLIT DUCT INSTALLATION PROCEDURE:

1. PLACE ONE 10' SPLIT DUCT SECTION UNDER CABLE.
2. IN ORDER TO STAGGER JOINTS, SAW ANOTHER SECTION IN HALF (ABOUT 5' FEET LONG).
3. PLACE 5' SECTION OVER CABLE AND SNAP THE TWO SECTIONS TOGETHER.
4. PLACE STRAP ABOUT 1' FROM THE END AND STRAP ANOTHER ABOUT 1' FROM THE JOINT WHERE THE ENDS OF THE TOP SECTIONS WILL BUTT.
5. PLACE ANOTHER 10' SPLIT DUCT SECTION OVER THE OPEN HALF OF THE BOTTOM SECTION, BUTT THE ENDS TIGHTLY TOGETHER AND SNAP THE SECTION TOGETHER.
6. PLACE A LENGTH OF DUCT TAPE AROUND BOTH SECTIONS OF THE SPLIT DUCT TO COVER THE BUTTED JOINT AND THE LONGITUDINAL JOINTS.
7. PLACE A STRAP ABOUT 1' BEYOND THE TAPED JOINT.
8. LAY ANOTHER LENGTH OF SPLIT DUCT UNDERNEATH THE CABLE, BUTT TOGETHER, TAPE THE BUTTED JOINT AND LONGITUDINAL JOINT. INSTALL STRAP ON FOOT ON EACH SIDE OF THE JOINT.
9. REPEAT PROCEDURE AS REQUIRED.
10. USE APPROPRIATE FITTINGS, COUPLINGS ETC, WHEN JOINING SPLIT DUCT TO EXISTING DUCTS ETC.
11. SPLIT DUCT SHALL BE MEASURED AND PAID FOR BY THE LINEAR FOOT, IE 25 FEET OF 1W4" SPLIT DUCT WOULD BE PAID FOR AS 25', 25' OF 4W4" SPLIT DUCT WOULD BE PAID FOR AS 100'.
12. MULTIPLE RUNS OF SPLIT DUCT SHALL BE INSTALLED PER THE DUCT BANK DETAILS.

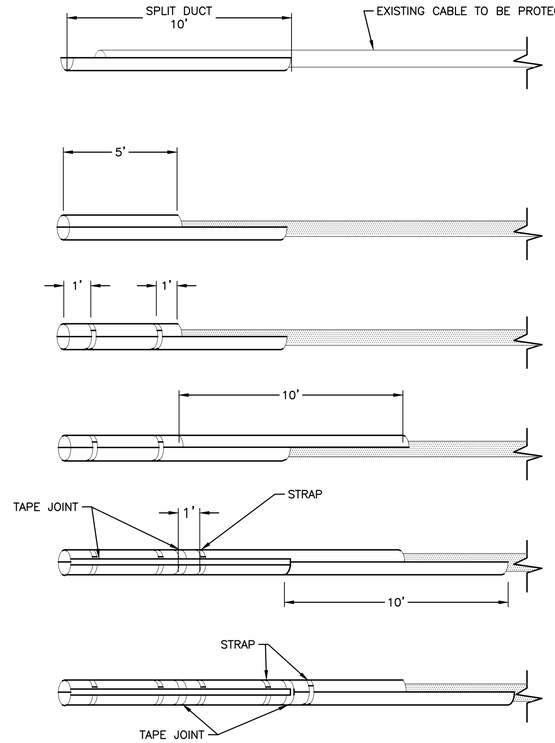

1 WAY 4" SPLIT DUCT INSTALLATION

N.T.S.

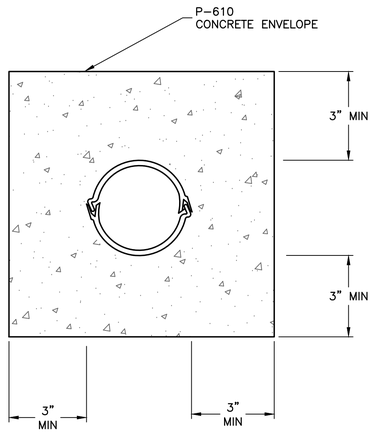

TYPICAL 1 WAY 4" SPLIT DUCT CONCRETE ENCASED

N.T.S.

AVCON
TRANSFORMING TODAYS IDEAS INTO TOMORROW'S REALITY
THIS DOCUMENT CONTAINS PRIVILEGED AND PROPRIETARY INFORMATION, ALL OF WHICH IS EXPRESSLY PROVIDED BY AVCON, INC., FOR USE BY THE INTENDED RECIPIENT, AND FOR A SPECIFIC PURPOSE. WITHOUT THE EXPRESS WRITTEN CONSENT OF AVCON, INC, ANY DISTRIBUTION, REPRODUCTION, OR OTHER USE OF THIS DOCUMENT, IN WHOLE OR IN PART, IS STRICTLY PROHIBITED

NO.	DATE	REVISION	BY

UTILITY PROTECTION

RELEASE FOR BID

AIRPORT TERMINAL AND HANGAR DEVELOPMENT

PREPARED FOR

DEFUNIAK SPRINGS MUNICIPAL AIRPORT

DESIGNED BY:	S.H.
DRAWN BY:	S.H.
CHECKED BY:	M.G.
APPROVED BY:	V.L.
PROJECT NO:	2019.028.01
DATE:	NOVEMBER 1, 2021

SHEET NUMBER

E-509

V:\2019\2019.028.01 – DEFUNIAK SPRINGS TWA TERMINAL NV FILES\000 CAD\1902801.E509_UTILITY PROTECTION.DWG 1/18/2022 5:17 PM

GENERAL NOTES (TYP. ALL SHEETS)

THE CONTRACT DOCUMENTS SHALL INCLUDE ALL DRAWINGS, SPECIFICATIONS, AND CONTRACT REQUIREMENTS FOR THE CONSTRUCTION OF THE PROPOSED GA TERMINAL AND RELATED WORK.

THE CONTRACT DOCUMENTS (DRAWINGS AND SPECIFICATIONS) SHALL ESTABLISH THE BASE LINE STANDARD FOR THE PROJECT. THE CONTRACTOR MAY SUBMIT SUBSTITUTIONS FOR CONSIDERATION BY THE OWNER AND THE ARCHITECT AS OUTLINED IN THE SPECIFICATIONS AND THE PROCUREMENT DOCUMENTS.

THE DRAWINGS INDICATE THE GENERAL SCOPE OF THE PROJECT IN TERMS OF AN ARCHITECTURAL DESIGN CONCEPT. THE DIMENSIONS OF THE BUILDING, THE MAJOR ARCHITECTURAL ELEMENTS, THE TYPE OF STRUCTURAL SYSTEM & THE MEP & FP SYSTEMS ARE BEING ISSUED; AS SCOPE DOCUMENTS. THE DRAWINGS DO NOT NECESSARILY INDICATE OR DESCRIBE ALL OF THE WORK REQUIRED FOR FULL PERFORMANCE AND COMPLETION OF THE REQUIREMENTS OF THE CONTRACT DOCUMENTS. FOR THE GENERAL SCOPE INDICATED OR DESCRIBED, THE CONTRACTOR & APPLICABLE SUB-CONTRACTORS SHALL FURNISH ALL WORK ITEMS REQUIRED FOR THE PROPER EXECUTION AND COMPLETION OF THE WORK.

1.1. THE CONTRACTOR SHALL VISIT THE JOB SITE AND BE KNOWLEDGEABLE OF ALL CONDITIONS THEREOF. THE CONTRACTOR SHALL INVESTIGATE, VERIFY AND BE RESPONSIBLE FOR ALL CONDITIONS OF THE PROJECT AND NOTIFY THE ARCHITECT AND OWNER OF ANY CONDITIONS REQUIRING MODIFICATION BEFORE PROCEEDING WITH THE WORK.

1.2. ALL WORK SHALL COMPLY WITH FEDERAL, STATE AND LOCAL CODES OR ORDINANCES.

1.3. DO NOT SCALE DRAWINGS. WRITTEN DIMENSIONS HAVE PRECEDENCE.

1.4. THE CONTRACT DOCUMENTS ARE COMPLEMENTARY, WHAT IS REQUIRED OF ONE IS REQUIRED BY ALL. THERE IS NO PRECEDENCE BASED ON SCALE OR SPECIFICATIONS VERSUS DRAWINGS. THE CONTRACT DOCUMENTS ESTABLISH THE MINIMUM REQUIREMENTS; SUBSTITUTION REQUESTS SHALL BE SUBMITTED FOR ALL VARIANCES OF LESSER QUALITY.

1.5. WHERE ONE DETAIL IS SHOWN FOR ONE CONDITION IT SHALL APPLY TO ALL LIKE OR SIMILAR CONDITIONS THOUGH NOT SPECIFICALLY MARKED.

1.6. IF AT ANY TIME A CONFLICT OR ERROR IS FOUND WITHIN THESE DOCUMENTS PRIOR TO OR DURING CONSTRUCTION THAT MAY BE CRITICAL TO THE INTEGRITY OF THIS PROJECT, THE CONTRACTOR SHALL CONTACT THE ARCHITECT AND THE OWNER IMMEDIATELY TO RESOLVE THE ERROR PRIOR TO PROCEEDING WITH THE AFFECTED WORK.

1.7. THE COORDINATION OF ALL MATERIALS, LABOR AND THE SUB CONTRACTORS WORKMANSHIP IS THE SOLE RESPONSIBILITY OF THE CONTRACTOR.

1.8. THE CONTRACTOR IS RESPONSIBLE FOR CONTACTING LOCAL BUILDING OFFICIALS AND INSPECTORS FOR PERMITS AND INSPECTIONS.

1.9. THE CONTRACTOR SHALL BE RESPONSIBLE FOR BRACING ALL WORK DURING CONSTRUCTION AND IMPLEMENTATION OF ALL SAFETY PROCEDURES IN ACCORDANCE WITH APPLICABLE CODES.

1.10. ALL FIXTURES, EQUIPMENT AND MATERIALS SHALL BE INSTALLED PER THE MANUFACTURER'S SPECIFICATIONS, RECOMMENDATIONS AND SUGGESTED INSTRUCTIONS.

1.11. ALL WORK SHALL BE IN ACCORDANCE WITH THE QUALITY STANDARDS OF THE TRADE AND SHALL BE INSTALLED IN ACCORDANCE WITH ALL APPLICABLE LOCAL, STATE AND FEDERAL CODES AND MANUFACTURERS RECOMMENDATIONS.

1.12. ITEMS NOTED AS "N.I.C" (NOT IN CONTRACT), "BY OWNER" OR "EXISTING" SHALL NOT BE INCLUDED IN THE CONTRACT. HOWEVER, PROVISIONS SHALL BE MADE BY RESPECTIVE SUB-CONTRACTOR TRADES TO ALLOW FOR THE INSTALLATION OF ITEMS NOTED. ALL FINISHES OF FLOORS, BASES, WAINSCOTS, WALLS AND CEILINGS BEHIND, UNDER AND/ OR OVER THESE ITEMS SHALL BE INCLUDED IN THE GENERAL CONTRACT UNLESS NOTED OTHERWISE (U.N.O.)

1.13. THE JOB SITE SHALL BE KEPT "BROOM CLEAN" AND FREE OF EXCESSIVE DEBRIS. ALL REFUSE CREATED IN THE EXECUTION OF THE CONTRACT FOR CONSTRUCTION IS THE RESPONSIBILITY OF THE CONTRACTOR . TRANSPORT TRASH, RUBBISH AND DEBRIS FROM THE SITE AND DISPOSE OF LEGALLY. THE MANNER OF THE REMOVAL SHALL BE CONFIRMED WITH AN OWNER'S REPRESENTATIVE AND SHALL MEET CITY, COUNTY AND STATE REGULATIONS.

1.14. DIMENSIONS ARE NOMINAL AND ARE TAKEN FROM FACE OF BLOCK WALL, CENTERLINE OF COLUMN AND FACE OF STUD U.N.O.

1.15. ALL UNIT MASONRY SHALL CONFORM TO ASTM C-90. MASONRY CONSTRUCTION SHALL COMPLY WITH THE SPECIFICATION FOR CONCRETE MASONRY STRUCTURES (ACI-530. 1-95/ ASCE 6-95/TMS 602-95) AND THE FLORIDA BUILDING CODE.

1.16. ALL MASONRY WALLS SHALL BE REINFORCED WITH HORIZONTAL JOINT REINFORCING AT 16 INCHES ON CENTER VERTICALLY. JOINT REINFORCING SHALL HAVE PREFORMED CORNERS AND "T" SECTIONS

1.17. MORTAR SHALL CONFORM TO ASTM C-270. TYPE S MORTAR AND TYPE M BELOW GRADE.

1.18. THE CONTRACTOR SHALL COORDINATE ALL LIGHTING LOCATIONS WITH THE DUCTWORK AND SPRINKLER LAYOUT. ANY VARIATIONS WITH LAYOUT OR CEILING HEIGHT SHALL BE REVIEWED WITH THE ARCHITECT PRIOR TO INSTALLATION.

1.19. THE CONTRACTOR SHALL PROVIDE A GENTLE SLOPE AT ALL GRADE ENTRANCES AND EXITS; AVOID ABRUPT CHANGES IN ELEVATION AND COMPLY WITH SLOPED WALKWAY, LANDINGS AND TURNING MOVEMENT REQUIREMENTS, PER FBC & ADA.

1.20. ALL INTERIOR EXPOSED CONCRETE & EXTERIOR CONCRETE SIDEWALKS & WALKWAYS, COURTYARD/PLAZA AREAS & CONCRETE PEDESTALS SHALL BE SEALED & PROTECTED FROM STAINING PRIOR TO APPLICATION OF THE SEALER & SUBSTANTIAL COMPLETION.

1.21. ALL EXPOSED EXTERIOR CONCRETE SHALL BE ARCHITECTURAL FINISHED CONCRETE, UNLESS NOTED OTHERWISE.

1.22. THE NEW BUILDING SHALL BE FULLY SPRINKLED IN ACCORDANCE WITH NFPA 13. SUBMIT SIGNED AND SEALED - ENGINEERED SPRINKLER DRAWINGS TO THE AUTHORITY HAVING JURISDICTION PRIOR TO FABRICATION AND INSTALLATION.

1.23. IT IS THE OWNER'S AND / OR TENANT'S RESPONSIBILITY TO CHECK THE CONSTRUCTION DOCUMENTS AND VERIFY ANY AND ALL LOCATIONS, SIZE, QUANTITY, QUALITY AND SPECIFIC MATERIALS USED IN CONJUNCTION WITH THE OWNERS SPECIAL EQUIPMENT LAYOUT USE OR FUNCTION.

1.24. THE CONTRACTOR SHALL SUBMIT TO THE ARCHITECT AND THE OWNER FOR ACCEPTANCE & REVIEW ALL FLORIDA PRODUCT APPROVALS AND/OR ENGINEERING, SIGNED AND SEALED DRAWINGS PREPARED BY A PROFESSIONAL ENGINEER LICENSED IN THE STATE, FOR ALL EXTERIOR ENVELOPE ELEMENTS AND AS REQUIRED BY THE CONTRACT DOCUMENTS, PRIOR TO ORDERING MATERIALS AND INSTALLATION . THE CONTRACTOR SHALL THEN SUBMIT THE "A/E ACCEPTED" SUBMITTALS TO THE BUILDING DEPARTMENT / PLANS EXAMINER (AUTHORITY HAVING JURISDICTION - AHJ), AS REQUIRED BY THE FLORIDA BUILDING CODE FOR APPROVAL AND ACCEPTANCE BY THE AHJ. THIS SHALL INCLUDE, BUT NOT BE LIMITED TO: WINDOWS, DOORS, LOUVERS, ROOFING, & OTHER EXTERIOR CLADDING ELEMENTS.

1.25. ALL SHOWER ENCLOSURES & FLOORS SHALL BE WATER PROOFED & FLOOD TESTED PRIOR TO INSTALLATION OF TILE.

1.26. PROVIDE ASPHALTIC BARRIER BETWEEN TOP OF CMU AND METAL TRUSS, TYPICAL.

PARTITION NOTES (TYP. ALL SHEETS)

2.1. INSTALL GYPSUM WALLBOARD IN ACCORDANCE WITH THE CURRENT VERSION OF UNITED STATES GYPSUM-GYPSUM CONSTRUCTION HANDBOOK, ASTM C754 AND ASTM 840; THE MOST STRINGENT REQUIREMENTS PREVAIL.

2.2. ALL PARTITIONS SHALL BE INSTALLED PLUMB AND TAPED AND SANDED SMOOTH SO THERE ARE NO VISIBLE JOINTS. GYPSUM FINISH LEVEL 4 AT WALLS, LEVEL 5 AT CEILINGS ADD SOFFITS AND LEVEL 2 IN CONCEALED SPACES. USE LEVEL 5 FINISH WHEN WALL COVERINGS ARE SPECIFIED.

2.3. VERIFY PARTITION THICKNESS FOR INTERNAL INCLUSIONS. NOTIFY ARCHITECT OF ANY DISCREPANCIES BETWEEN SCHEDULED PARTITION THICKNESS AND INTERNAL INCLUSION.

2.4. PARTITIONS ARE DIMENSIONED NOMINALLY, UNLESS NOTIFIED OTHERWISE.

2.5. HEIGHTS ARE DIMENSIONED FROM THE TOP OF SLAB, UNLESS NOTED OTHERWISE. VERIFY CONDITION OF SLAB AND SLAB ELEVATION. COORDINATE ACCESSIBLE HEIGHTS REQUIRED WITH FLOORING MATERIAL THICKNESS.

2.6. INSTALL WATER-RESISTANT GYPSUM BOARD IN AREAS SUBJECT TO MOISTURE. INSTALL CEMENT BOARD AT ALL TILED WALLS.

2.7. PROVIDE ALL METAL CORNER AND FINISH BEADS AND / OR TRIM FOR ALL EXPOSED EDGES AND CORNERS. SPACKLE, BLEND AND SAND SMOOTH INTO ADJACENT SURFACES.

2.8. PROVIDE EXPANSION JOINTS IN GYPSUM WALLBOARD (FIRE RATED, WHERE REQUIRED) AS RECOMMENDED BY GYPSUM WALLBOARD MANUFACTURER AND CENTERED ABOVE ALL DOORS.

2.9. IN-WALL BLOCKING SHALL BE INSTALLED IN STUD WALLS, BEHIND ALL ACCESSORIES INCLUDING BUT NOT LIMITED TO: FIRE EXTINGUISHER MOUNTING BRACKETS, SIGNAGE ETC. WOOD BLOCKING SHALL BE TREATED.

2.10. CONTROL JOINTS IN MASONRY WALLS SHALL BE A MAXIMUM OF 4 FEET FROM CORNERS AND 20 FEET ON CENTER.

2.10. PROVIDE A CONTINUOUS BEAD OF SEALANT WITH BACKER ROD AT THE PERIMETER OF ALL EXTERIOR DOOR AND WINDOW FRAMES WHERE THEY MEET WALLS.

2.11. THE CONTRACTOR SHALL COORDINATE AND VERIFY THE EXACT SIZE AND LOCATION OF ALL FLOOR, WALL AND CEILING PENETRATIONS / OPENINGS WITH EACH OF THE RESPECTIVE MECHANICAL, PLUMBING, ELECTRICAL AND FIRE PROTECTION DRAWINGS.

2.12. ALL PARTITION PENETRATIONS SUCH AS DUCTWORK, SHALL BE FIELD VERIFIED. PARTITIONS SHALL BE BRACED AND OPENINGS REINFORCED.

2.13. DOOR OPENINGS NOT DIMENSIONALLY LOCATED SHALL BE CENTERED BETWEEN WALLS OR LOCATED WITHIN 4" OF THE FINISH FACE OF AN ADJACENT WALL OR COLUMN AS SHOWN ON PLANS.

2.14. CAULK GAPS WHERE INTERSECTIONS OF ELEMENTS ARE NOT CRISP AND CONSISTENT.

2.15. ALL RATED PARTITIONS OR SMOKE BARRIERS SHALL EXTEND FROM FLOOR TO STRUCTURE ABOVE, UNLESS NOTED OTHERWISE., AND SEALED AIRTIGHT. USE U.L. LISTED HEAD OF WALL INSULATION OR UL APPROVED SEALANT. COMPLY WITH UL RATED ASSEMBLY REQUIREMENTS FOR ALL RATED WALLS.

2.16. ALL FIRE AND / OR SMOKE BARRIERS OR WALLS SHALL BE EFFECTIVELY AND PERMANENTLY IDENTIFIED WITH SIGNS OR STENCILING ABOVE ANY DECORATIVE CEILING AND IN CONCEALED SPACES WITH LETTERS A MINIMUM OF 2 INCHES HIGH ON A CONTRASTING BACKGROUND SPACED A MAXIMUM OF 12 FEET ON CENTER WITH A MINIMUM OF ONE PER WALL OR BARRIER. THE HOURLY RATING SHALL BE INCLUDED ON ALL RATED BARRIERS OR WALLS. SUGGESTED WORDING "(_) - HOUR RATED FIRE AND SMOKE BARRIER, PROTECT ALL OPENINGS". THIS SHOULD APPLY TO ALL RATED WALLS.

FINISH NOTES

3.1. VERIFY FINISH WITH OWNER'S REPRESENTATIVE & ARCHITECT PRIOR TO FINISH APPLICATION

3.2. SURFACES ARE TO BE FREE OF IMPERFECTIONS AND MARKINGS SUBJECT TO BLEED-THROUGH.

3.3. PAINT DIFFUSERS AND RETURN GRILLES AT CEILING TO MATCH ADJACENT CEILING FINISHES, UNLESS NOTED OTHERWISE. INTERIOR OF DUCT WORK VISIBLE FROM FINISHED SPACES SHALL BE PAINTED BLACK 12" FROM THE DIFFUSER.

3.4. INSTALL FLOORING PURSUANT TO MANUFACTURERS INSTRUCTIONS AND MOISTURE REQUIREMENTS, UNLESS NOTED OTHERWISE.

3.5. RESILIENT BASE IS COVED AT VINYL & CONCRETE FLOORING AND STRAIGHT AT CARPET.

3.6. CARPET OF THE SAME SPECIFICATION SHALL COME FROM THE SAME DYE LOT AND MEET THE CARPET AND RUG INSTITUTE MODEL SPECIFICATION AND INDUSTRY STANDARDS FOR SIDE-TO-SIDE MATCH. THE CONTRACTOR SHALL USE LOW OR NO VOC ADHESIVE AS RECOMMENDED BY THE MANUFACTURER.

3.7. REPAIR, REFINISH AND PREPARE, AS APPLICABLE, EXISTING SURFACES TO RECEIVE NEW MATERIALS. VERIFY COMPATIBILITY OF ADHESIVES & COATINGS WITH SUBSTRATES PRIOR TO APPLICATION.

3.8. FINISH REQUIREMENTS SHALL BE DIRECTED BY OWNER AND AS FOLLOWS:

3.9. ALL FINISHES SHALL COMPLY WITH THE FOLLOWING MINIMUM REQUIREMENTS:

EXIT FINISHES, WALLS AND CEILINGS	CLASS B
EXIT FINISHES, FLOORS	CLASS II
ALL OTHER SPACES, WALLS AND CEILINGS	CLASS B
ALL OTHER SPACES, FLOORS	NO REQUIREMENTS

CLASS A INTERIOR WALL AND CEILING FINISH FLAME SPREAD 0-25,
SMOKE DEVELOPED 0-450
CLASS B INTERIOR WALL AND CEILING FINISH FLAME SPREAD 26-75, SMOKE DEVELOPED 0-450

CLASS I INTERIOR FLOOR FINISH	MINIMUM 0.45 WATTS PER	SQ CM
CLASS II INTERIOR FLOOR FINISH	MINIMUM 0.22. WATTS PER	SQ CM

3.10. ALL FINISHES SHALL EXTEND TO TOP OF LIGHT COVES, TYPICAL.

3.11. INSTALL AND SPACE CONTROL JOINTS AT TILED SURFACES PER TCNA STANDARDS.

3.12. ALL STUCCO CONTROL JOINTS SHALL COMPLY WITH FBC AREA AND SPACING REQUIREMENTS AND SHALL NOT EXCEED 144 SF IN AREA ENCOMPASSED BY THE CONTROL JOINTS.

REFLECTED CEILING NOTES

4.1. REF REFLECTED CEILING PLANS AND NOTES, FOR MORE INFORMATION. THE FINISHED CWB CLG WILL BE A GSA LEVEL 5 FINISH.

4.2. VERIFY FIELD CONDITIONS AND LOCATIONS OF ALL PLUMBING, MECHANICAL, STRUCTURAL, FIRE PROTECTION, ELECTRICAL, COMMUNICATION AND LIFE SAFETY AND ANY AND ALL OTHER APPLICABLE ITEMS. INSTALL PLUMBING, FIRE PROTECTION, MECHANICAL FANS, DUCTS, CONDUITS AND OTHER RELATED AND APPURTENANT ITEMS SO AS NOT TO CONFLICT WITH LUMINARIES AND ANY AND ALL FIELD CONDITIONS. THE CONTRACTOR IS RESPONSIBLE FOR COORDINATION OF PLENUM ELEMENTS. ARRANGE OR MODIFY NON-VISIBLE ITEMS TO FIT CONDITIONS OF THE REFLECTED CEILING PLAN LAYOUT.

4.3. CONTRACTOR SHALL PROVIDE FULLY COORDINATED DRAWINGS INDICATING ALL CEILING COMPONENTS, ACCESS PANELS & DEVICES (I.E. ARCHITECTURAL, MECHANICAL, ELECTRICAL, PLUMBING & FIRE PROTECTION). EACH DISCIPLINE SHALL BE INDICATED SUCH THAT THEY ARE OVERLAID AND IDENTIFIABLE INDIVIDUALLY ON ONE DRAWING. ANY DISCREPANCIES NOTED SHALL BE BROUGHT TO THE ARCHITECT AND THE OWNER'S ATTENTION PRIOR TO INSTALLATION. ANY WORK INSTALLED REQUIRING CORRECTION NOT BROUGHT TO THE ARCHITECT'S ATTENTION AND WITHOUT SUCH NOTIFICATION SHALL BE CORRECTED BY THE CONTRACTOR WITH NO ADDITIONAL COST TO THE OWNER.

4.4. CONTRACTOR TO PROVIDE AND LOCATE ALL CEILING ACCESS PANELS IN GYPSUM, PLASTER AND CEMENT BOARD CEILINGS. CONTRACTOR SHALL PROVIDE THE ARCHITECT WITH LOCATIONS / COORDINATION DRAWINGS OF ALL REQUIRED ACCESS PANELS PRIOR TO THE INSTALLATION OF CEILING ELEMENTS, INCLUDING REQUIRED ACCESS PANELS; VALVES OR EQUIPMENT REQUIRING ACCESS PANELS ABOVE METAL SLAT OR DECORATIVE WOOD CEILINGS WILL NOT BE ACCEPTABLE. RATED ACCESS PANELS SHALL BE PROVIDED IN RATED ASSEMBLIES.

4.5. CEILING ACCESS PANELS SHALL BE PROVIDED IN NON-ACCESSIBLE CEILINGS BELOW THE FOLLOWING THE MECHANICAL AND PLUMBING DEVICES
- VALVES
- FLOW MEASURING DEVICES
- MIXING BOXES
- POWER OPERATED DAMPERS
- ACCESS PANEL IN DUCTWORK
- VOLUME AND BALANCING DEVICES
- WATER FLOW SWITCHES
- SPRINKLER SYSTEM DRAINS AND TEST CONNECTIONS
- PRESSURE SWITCHES
- OTHER DEVICES LOCATED ON DRAWINGS

4.6. MECHANICAL, ELECTRICAL, COMMUNICATION AND LIGHTING PLAN ELEMENTS ARE SHOWN FOR LOCATION PURPOSES ONLY. REFER TO MECHANICAL AND ELECTRICAL DRAWINGS FOR MORE INFORMATION.

4.7. INSTALL FULLY RECESSED FIXTURES ONLY, INCLUDING BUT NOT LIMITED TO DIFFUSERS, GRILLES, ETC. UNLESS NOTED OTHERWISE.

4.8. INSTALL UNDERWRITERS LABORATORIES (U.L.) LABELED DEVICES

4.9. INSTALL SPRINKLER HEADS WITH TRIM RINGS INSTALLED TIGHT TO FINISH CEILING.

SITE NOTES

5.1. PROVIDE SUBTERRANEAN TERMITE PREVENTION IN SOIL AREAS SCHEDULED TO RECEIVE NEW CONSTRUCTION. THE CONTRACTOR / INSTALLER SHALL SUBMIT A CERTIFICATE STATING THAT THE TREATMENT HAS BEEN APPLIED IN ACCORDANCE WITH THE APPLICABLE GOVERNING REGULATIONS FOR THE LOCATION OF THE PROJECT. RETREAT AREAS DISTURBED BY EXCAVATION AFTER INITIAL TREATMENT HAS BEEN IMPLEMENTED.

5.2. ADVISE UTILITY LOCATION COMPANY OF EXCAVATION ACTIVITIES (4)-FOUR WEEKS PRIOR TO EXCAVATION ACTIVITIES. LOCATE, IDENTIFY AND MARK UNDERGROUND UTILITIES PASSING THROUGH THE AREA OF CONSTRUCTION BEFORE COMMENCING WITH WORK.

5.3. REMOVE ANY MATERIAL NOT REQUIRED FOR USE ON THE PROJECT (INCLUDING UNSATISFACTORY SOILS, EXCESS SATISFACTORY SOILS, TRASH AND DEBRIS) AND LEGALLY DISPOSE OF IT OFF OF THE OWNERS PROPERTY.

5.4. BURNING ON SITE SHALL NOT BE PERMITTED.

5.5. PROVIDE AN APPROVED CONSTRUCTION ENTRANCE AS REQUIRED BY THE AUTHORITY HAVING JURISDICTION.

5.6. IMPACT RESISTANT VAPOR BARRIER TO BE PROVIDE BELOW ALL SLAB-ON-GRADE FLOORS. COMPLY WITH MFR'S PATCHES, LAPS AND JOINT SEAL REQUIREMENTS.

ROOF NOTES

6.1. ALL ROOF PARAPET WALL ASSEMBLIES SHALL BE FIRE RESISTANT & PRESSURE TREATED WOOD BLOCKING.

6.2. ALL FASTENERS AT STANDING SEAM METAL ROOF AREAS ARE TO BE FULLY CONCEALED.

POWER SECURITY AND COMMUNICATION NOTES

7.1. INSTALL UNDERWRITERS LABORATORIES (U.L.) LABELED DEVICES

7.2. INSTALL SWITCHES 48 INCHES ABOVE THE FINISH FLOOR SLAB UNLESS NOTED OTHERWISE. HEIGHTS ARE DETERMINED FROM TOP OF FLOOR SLAB TO CENTERLINE OF COVER PLATE, MOUNTED VERTICALLY LENGTHWISE, U.N.O. GANG-SWITCH COVER PLATES SHALL BE ONE PIECE TYPE, QUANTITY OF SWITCHES AS APPLICABLE AND AS REQUIRED. DEVICES AND COVER PLATES TO BE LEVITON, WHITE.

7.3. RECEPTACLES MOUNTED AT COUNTER HEIGHT SHALL BE INSTALLED HORIZONTALLY ABOVE THE COUNTER OR WHERE A BACKSPLASH OCCURS, ABOVE THE BACKSPLASH OF THE COUNTER.

7.4. INSTALL WALL MOUNTED OUTLETS , POWER, COMMUNICATIONS, DATA, ETC. 18 INCHES ABOVE FLOOR SLAB TO CENTERLINE OF COVER PLATE MOUNTED VERTICALLY LENGTHWISE, UNLESS NOTED OTHERWISE (U.N.O.)

7.5. DO NOT MOUNT OUTLETS BACK TO BACK

7.6. VERIFY ALL EQUIPMENT MOUNTING REQUIREMENTS OF ALL ELECTRICAL, COMMUNICATIONS AND OTHER EQUIPMENT REQUIRING SPECIAL PLUG CONFIGURATIONS.

7.7. PROVIDE POWER AND OTHER FITTINGS FOR APPLIANCES AND OTHER DEVICES AS REQUIRED FOR PROPER OPERATION

7.8. VERIFY OR ACQUIRE EQUIPMENT SPECIFICATIONS FROM OWNER FOR PROPER FIT AND POWER REQUIREMENTS.

7.9. FURNISH, INSTALL, AND COORDINATE OWNER'S & FBO'S TELEPHONE, DATA, COMMUNICATION, TECHNOLOGY, CABLING AND SECURITY INSTALLATIONS AS REQUIRED.

7.10. THE ELECTRICAL CONTRACTOR SHALL PROVIDE A COMPLETE ELECTRICAL, DATA AND COMMUNICATION SYSTEM INSTALLATION INCLUDING ALL WORK CUSTOMARILY INCLUDED IF NOT SPECIFICALLY CALLED OUT FOR.

7.11. ALL DOORS DESIGNATED AS SECURED, OR SHOWN TO HAVE "CR" (CARD READERS) SHALL BE FURNISHED AND INSTALLED WITH ELECTRICAL LOCKS/LATCHES. ALL WIRING SHALL BE CONCEALED WITHIN THE FRAME. POWER FOR TRANSFORMERS & LOCK CONTROLS SHALL BE PROVIDED AS REQUIRED FOR FULLY FUNCTION SYSTEM.

7.12. FURNISH AND INSTALL ELECTRIC LOCK PANIC RELEASE BUTTONS AT INTERIOR SIDE OF DOORS WITH ELECTRIC LOCKS @ EGRESS DOORS AND OCCUPANCY/MOTION SENSORS @ NON EGRESS DOORS. EGRESS DOORS AT SECURED OR SIDA LOCATIONS SHALL INCLUDE A 15 SECOND DELAY BEFORE RELEASING.

7.13. FURNISH AND INSTALL DELAYED EGRESS HARDWARE AT ALL SIDA (APRON AND HANGAR ACCESS) EGRESS DOORS.

7.14. THE CONTRACTOR SHALL COORDINATE WITH THE OWNER'S SECURITY CONTRACTOR FOR INSTALLATION AND WIRING CHASE WAYS, AND CONTROL INTERFACE FOR POWER OPERATED DOORS.

7.15. AUTOMATIC SLIDING DOORS SHALL BE COORDINATED & PROGRAMMED WITH THE SECURITY SYSTEM.

7.15. ALL ACCESS CONTROL DEVICES SHALL BE NARROW PROFILE & MOUNTED AT THE DOOR JAMB.

TO THE BEST OF THE ARCHITECT & ENGINEER'S KNOWLEDGE, THESE PLANS COMPLY WITH APPLICABLE MINIMUM BUILDING CODES AND THE APPLICABLE FIRE-SAFETY STANDARDS AS DETERMINED BY THE LOCAL AUTHORITY IN ACCORDANCE WITH CHAPTER 633, FLORIDA STATUTES.

FOR PERMIT & BIDDING ONLY

AVCON
TRANSFORMING TODAY'S IDEAS INTO TOMORROW'S REALITY

WILLIAM A. HAYWARD JR.
FL LICENSE NO.:AR0011007

NO.	DATE	REVISION	BY

GENERAL NOTES

100% DESIGN DRAWINGS

AIRPORT TERMINAL AND HANGAR DEVELOPMENT

PREPARED FOR
DEFUNIAK SPRINGS MUNICIPAL AIRPORT

DESIGNED BY:	CH
DRAWN BY:	MW
CHECKED BY:	DT
APPROVED BY:	WAH
PROJECT NO:	176232
DATE:	11/1/2021

SHEET NUMBER

G0.02

THIS DOCUMENT CONTAINS PRIVILEGED AND PROPRIETARY INFORMATION, ALL OF WHICH IS EXPRESSLY PROVIDED BY AVCON, INC., FOR USE BY THE INTENDED RECIPIENT, AND FOR A SPECIFIC PURPOSE, WITHOUT THE EXPRESS WRITTEN CONSENT OF AVCON, INC. ANY DISTRIBUTION, REPRODUCTION, OR OTHER USE OF THIS DOCUMENT, IN WHOLE OR IN PART, IS STRICTLY PROHIBITED.

SYMBOLS



VIEW CALLOUT

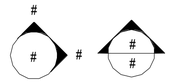

ELEVATIONS


BUILDING SECTION


WALL SECTION

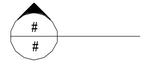
INTERIOR SECTION


DETAIL SECTION

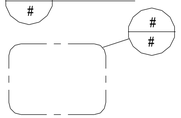
CALLOUT PLAN, SECTION OR DETAIL


COLUMN GRID LABEL - NEW


COLUMN GRID LABEL - EXISTING


REVISION



ROOM TAG



PARTITION TYPE


DOOR TAG - SEE SCHEDULE



KEYNOTE



WINDOW TYPE



TOILET ROOM ACCESSORIES


ELEVATION MARK

DENOTES ABOVE, BELOW, OR BEHIND


ACCESSIBLE TOILET STALL


RECYCLING COLLECTION AREA



NORTH ARROW

CENTER LINE

FLOOR TRANSITION



ROOF SLOPE ARROW


LEVEL LINE


SPOT ELEVATION

PLANS / PLAN DETAIL GRAPHICS


BRICK WALLS


CONCRETE BLOCK WALLS


CAST-IN-PLACE-CONCRETE WALLS


STUD WALLS


CONCRETE SLABS AND/OR CONCRETE SIDEWALKS


NEW WALLS


BATT INSULATED WALLS


FOAM INSULATED WALLS

SECTIONS/ SECTIONAL DETAILS


CONCRETE BLOCK


CAST-IN-PLACE-CONCRETE


STRUCTURAL/MISCELLANEOUS STEEL


EARTH


GRAVEL/ENGINEERED FILL


STONE, OR NATURAL BUILDING STONE

PLASTER OR GYPSUM BOARD, OR EXTERIOR SHEATHING

BATT INSULATION

SPRAYFOAM INSULATION

ROOF, TAPERED, CAVITY OR RIGID BOARD INSULATION

FINISHED WOOD TRIM

PLYWOOD

CAVITY DRAINAGE MATERIAL

METAL ROOF DECKING

PLANS/ PLAN FIRE RATED GRAPHICS

ABB	DESCRIPTION
_____ A _____	
#	POUND OR NUMBER
&	AND
<	ANGLE
@	AT
AA	ANODIZED ALUMINUM
ABV	ABOVE
ACT	ACOUSTIC CEILING TILE
ACT	ACOUSTIC CEILING TILE
ADDL	ADDITIONAL
ADJ	ADJACENT, ADJUSTABLE
AED	AUTOMATED EXTERNAL DEFIBRILLATOR
AFF	ABOVE FINISHED FLOOR
ALUM	ALUMINUM
ANOD	ANODIZED
AP	ACCESS PANEL
APPROX	APPROXIMATE(LY)
ARCH	ARCHITECT OR ARCHITECTURAL
ASTM	AMERICAN SOCIETY FOR TESTING MATERIAL
ATTEN	ATTENUATE, ATTENUATION
AVG	AVERAGE
_____ B _____	
B/	BOTTOM OF
B/C	BOTTOM OF CURB
BC	BASE CABINET
BD	BOARD
BIT	BITUMINOUS
BLDG	BUILDING
BSMT	BASEMENT
_____ C _____	
[	CHANNEL
C/	CENTER OF
CAB	CABINET
CC	CENTER TO CENTER
CG	CORNER GUARD
CJ	CORNER JOINT
CL	CENTER LINE
CLG	CEILING
CLG HT	CEILING HEIGHT
CLO	CLOSET
CLR	CLEAR
CMU	CONCRETE MASONRY UNIT
CO	CLEAN OUT
COL	COLUMN
CONC	CONCRETE
CONT	CONTINUOUS
CORR	CORRIDOR
CP	COPIER
CT	CERAMIC TILE
CY	CUBIC YARD
_____ D _____	
DF	DRINKING FOUNTAIN
DIA	DIAMETER
DIM	DIMENSION
DN	DOWN
DW	DISHWASHER
DWG	DRAWING
_____ E _____	
E	EAST
EA	EACH
EB	EDGE BANDING
EIFS	EXTERIOR INSULATION FINISH SYSTEM
EJ	EXPANSION JOINT
ELEC	ELECTRICAL
ELEV	ELEVATOR
EMER	EMERGENCY
ENCL	ENCLOSE(URE)
EP	ELECTRICAL PANEL
EQ	EQUAL
EQUIP	EQUIPMENT
EWC	ELECTRIC WATER COOLER
EXIST	EXISTING
EXP BLT	EXPANSION BOLT
EXT	EXTERIOR
_____ F _____	
<	FABRIC
F/F	FACE TO FACE
FAX	FACSIMILE

ABB	DESCRIPTION
FE	FIRE EXTINGUISHER
FEC	FIRE EXTINGUISHER CABINET
FHC	FIRE HOSE CABINET
FL	FLOOR
FL CO	FLOOR CLEANOUT
FP	FIRE PROTECTION
FPRF	FIREPROOF(ING)
FR	FIRE RATED OR FRAME
FT	FOOT/FEET
_____ G _____	
GA	GAUGE
GL	GLASS OR GLAZING
GPM	GALLONS PER MINUTE
GRD	GROUND
GWB	GYPSUM WALL BOARD
_____ H _____	
HB	HOSE BIBB
HC	HANDICAP(PED)
HDW	HARDWARE
HM	HOLLOW METAL
HOR	HORIZONTAL
HP	HIGH POINT
HTR	HEATER
_____ I _____	
ID	INSIDE DIAMETER
IN	INCH(ES)
INT	INTERIOR
_____ J _____	
JB	JAMB
JST	JOIST
JT	JOINT
_____ L _____	
LAM	LAMINATE
LAN	LOCAL AREA NETWORK CONNECTION
LAV	LAVATORY
LB	POUND
LF	LINEAL FOOT
LP	LOW POINT
LTL	LINTEL
_____ M _____	
m	METERS
MAS	MASONRY
MAX	MAXIMUM
MDF	MEDIUM DENSITY FIBERBOARD
MECH	MECHANICAL
MEZZ	MEZZANINE
MFR	MANUFACTURE
MH	MANHOLE
MICRO	MICROWAVE
MIN	MINIMUM
MISC	MISCELLANEOUS
mm	MILLIMETERS
MO	MASONRY OPENING
MTD	MOUNTED EL
MTL	METAL
_____ N _____	
N	NORTH
NFPA	NATIONAL FIRE PROTECTION ASSOCIATION
NIC	NOT IN CONTRACT
NOM	NOMINAL
NTS	NOT TO SCALE
_____ O _____	
OC	ON CENTER
OD	OUTSIDE DIAMETER
OFF	OFFICE
OPNG	OPENING
OPP	OPPOSITE
_____ P _____	
PART	PARTITION
PL	PLATE
PLAM	PLASTIC LAMINATE
PLAS	PLASTER
PLYWD	PLYWOOD
PNL	PANEL
POS	POINT OF SALE
PR	PAIR
PRCST	PRECAST
PREFAB	PREFABRICATED

ABB	DESCRIPTION
PROP	PROPERTY
PSI	POUNDS PER SQUARE INCH
PSIG	POUNDS PER SQUARE INCH GAUGE
PT	POINT
PTD	PAINTED
_____ Q _____	
QTY	QUANTITY
_____ R _____	
R	RISER OR RADIUS
RCP	REFLECTED CEILING PLAN
RD	ROOF DRAIN
REF	REFER / REFERENCE
REG	REGISTER
REINF	REINFORCING
REQ'D	REQUIRED
RFG	REFRIGERATOR
RG	RANGE
RM	ROOM
RO	ROUGH OPENING
RTS	RUBBER TRANSITION STRIP
RWC	RAIN WATER CONDUCTOR
_____ S _____	
S	SOUTH
SAN	SANITARY
SCHD	SCHEDULE
SEC	SECTION
SF	SQUARE FOOT
SIM	SIMILAR
SPKLR	SPRINKLER
SQ	SQUARE
SQ FT	SQUARE FOOT
SSMR	STANDING SEAM METAL ROOF
SSTL	STAINLESS STEEL
STD	STANDARD
STL	STEEL
STN	STAINED
STOR	STORAGE
SUSP	SUSPEND, SUSPENDED, OR SUSPENSION
SYS	SYSTEM
_____ T _____	
"T"	TEE (BAR OR W)
T	TREAD
T/	TOP OF
T/C	TOP OF CURB
TB	TACKBOARD
TC	TERRA COTTA
TEL	TELEPHONE
TEMP	TEMPERED OR TEMPERATURE
TERM	TERMINATE / TERMINAL
THRESH	THRESHOLD
TLT	TOILET
TV	TELEVISION
TYP	TYPICAL
_____ U _____	
UH	UNIT HEATER
UL	UNDERWRITER'S LABORATORY
UMCT	UNGLAZED MOSAIC CERAMIC TILE
UNO	UNLESS NOTED OTHERWISE
_____ V _____	
VEST	VESTIBULE
VIF	VERIFY IN FIELD
_____ W _____	
W	WEST
W/	WITH
W/O	WITHOUT
WC	WATER CLOSET
WIN	WINDOW
WP	WATERPROOF(ING)
WSCT	WAINSCOT
WT	WEIGHT
WWF	WELDED WIRE REINFORCEMENT

FOR PERMIT & BIDDING ONLY

AVCON
TRANSFORMING TODAY'S IDEAS INTO TOMORROW'S REALITY

WILLIAM A. HAYWARD JR.
FL LICENSE NO.:AR0011007

NO.	DATE	REVISION	BY

GENERAL SYMBOLS, LEGENDS AND GRAPHIC STANDARDS
100% DESIGN DRAWINGS

AIRPORT TERMINAL AND HANGAR DEVELOPMENT

PREPARED FOR
DEFUNIAK SPRINGS MUNICIPAL AIRPORT

DESIGNED BY:	CH
DRAWN BY:	MW
CHECKED BY:	DT
APPROVED BY:	WAH
PROJECT NO:	176232
DATE:	11/1/2021

SHEET NUMBER

G0.03

THIS DOCUMENT CONTAINS PRIVILEGED AND PROPRIETARY INFORMATION, ALL OF WHICH IS EXPRESSLY PROVIDED BY AVCON, INC., FOR USE BY THE INTENDED RECIPIENT, AND FOR A SPECIFIC PURPOSE. WITHOUT THE EXPRESS WRITTEN CONSENT OF AVCON, INC. ANY DISTRIBUTION, REPRODUCTION, OR OTHER USE OF THIS DOCUMENT, IN WHOLE OR IN PART, IS STRICTLY PROHIBITED.

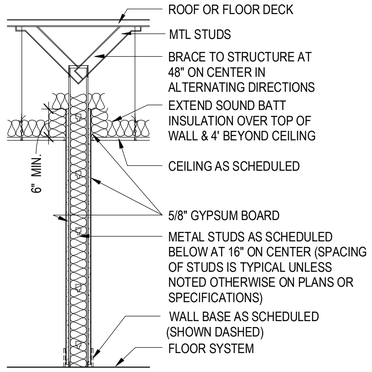

PARTITION TYPE 1B0

TYPE	FIRE RATING	CORE WIDTH	OVERALL WIDTH	STC RATED	UL LISTING	STC TEST
1B0.3	NON-RATED	3 5/8"	4 7/8"	NON-RATED	N/A	N/A
1B0.3.c	NON-RATED	3 5/8"	4 7/8"	45	N/A	N/A
1B0.6	NON-RATED	6"	7 1/4"		N/A	

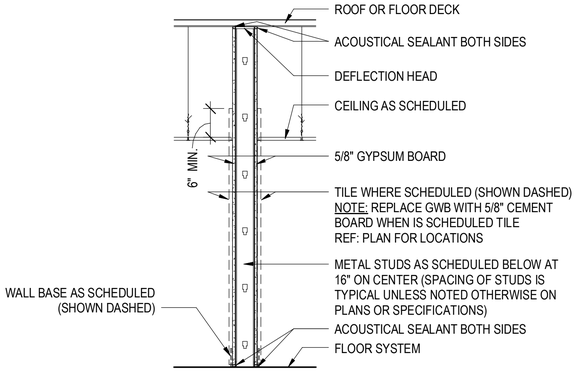

PARTITION TYPE 1A0

TYPE	FIRE RATED	CORE WIDTH	OVERALL WIDTH	STC RATED	UL LISTING	STC TEST
1A0.3.t	NON-RATED	3 5/8"	5 5/8"	NON-RATED	N/A	N/A
1A0.6	NON-RATED	6"	7 1/4"	NON-RATED	N/A	N/A
1A0.6.t	NON-RATED	6"		NON-RATED	N/A	N/A
1A0.6.tt	NON-RATED	6"	8 3/4"	NON-RATED	N/A	N/A
1A0.8	NON-RATED	8"	9 1/4"			
1A0.8.t	NON-RATED	8"	9 1/4"			

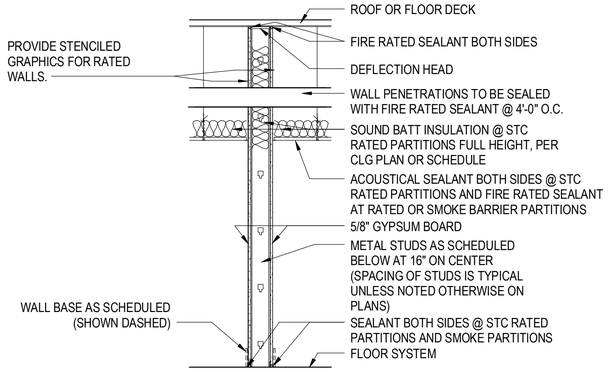

PARTITION TYPE 1A1

TYPE	FIRE RATED	CORE WIDTH	OVERALL WIDTH	STC RATED	UL LISTING	STC TEST
1A1.3	1 HOUR	3 5/8"	4 7/8"	NON-RATED	N/A	N/A
1A1.3.c	1 HOUR	3 5/8"	4 7/8"	45	U465	

NOTES - PARTITION

1 ALL PARTITIONS IN RESTROOMS TO RECEIVE MOISTURE RESISTANT GYPSUM BOARD IN PLACE OF GYPSUM WALL BOARD @ NON-TILED WALLS.

2 ALL PARTITIONS AT SHOWER ENCLOSURES TO RECEIVE 5/8" CEMENT BOARD IN PLACE OF GYPSUM WALL BOARD.

3 WHERE WALLS ARE TO RECEIVE TILE OR STONE CLADDING, 5/8" CEMENT BOARD IS TO BE USED IN PLACE OF GYPSUM WALL BOARD.

4 ALL PERIMETER FRAMED WALLS AROUND RESTROOMS THAT ARE NOT ALREADY REQUIRED TO RECEIVE AN STC RATING WILL RECEIVE SOUND ATTENUATING BATT INSULATION AND ACOUSTICAL SEALANT AT THE TOP AND BOTTOM OF THE WALL. THE SOUND ATTENUATING BATT INSULATION WILL BE CONTINUOUS THE ENTIRE HEIGHT OF THE WALL.

5 FILL VOIDS AROUND WALL PENETRATIONS WITH UL RATED FIRE SEALANT TO MAINTAIN WALL FIRE RATED ASSEMBLY.

6 ALL FIRE RATED PARTITIONS TO RECEIVE TYPE "X" GYPSUM BOARD.

7 PROVIDE STENCILED GRAPHICS @ ALL RATED AND SMOKE BARRIER WALLS. PER BUILDING CODE REQUIREMENTS, LETTERING SHALL IDENTIFY WALL RATING, SHALL NOT BE LESS THAN 2 INCHES IN HEIGHT AND LOCATED AT EACH END OF THE WALLS AND SPACED NOT LESS THAN 30 FT ON CENTER.

8 REFER TO UL DESIGN DETAILS FOR BALANCE OF NOTES, DIMENSIONS OR OTHER REQUIREMENTS.

9 REFER TO CLG PLANS FOR ACOUSTICAL BATT INSULATION

10 "OVERALL WIDTH" IS FINISHED WIDTH, INCLUDING TILES, ETC.

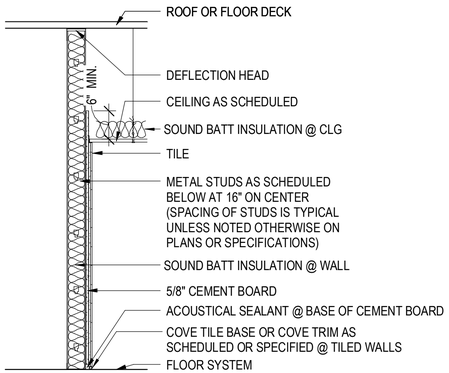

PARTITION TYPE 3A0

TYPE	FIRE RATING	CORE WIDTH	OVERALL WIDTH	STC RATING	UL LISTING	STC TEST
3A0.3.c.t	NON-RATED	3 5/8"	5"	45	N/A	N/A

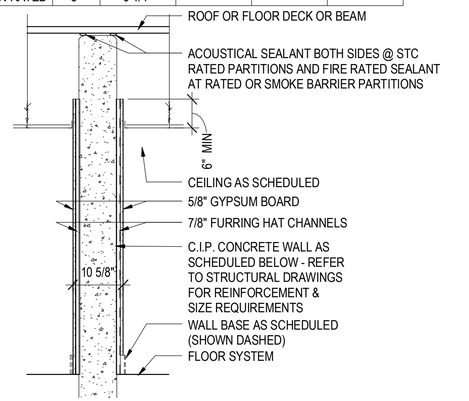

PARTITION TYPE 7A0

TYPE	FIRE RATING	CORE WIDTH	OVERALL WIDTH	STC RATING	UL LISTING
7A0.8	NON-RATED	7-5/8"	7 5/8"	NON-RATED	TMS 0302-12

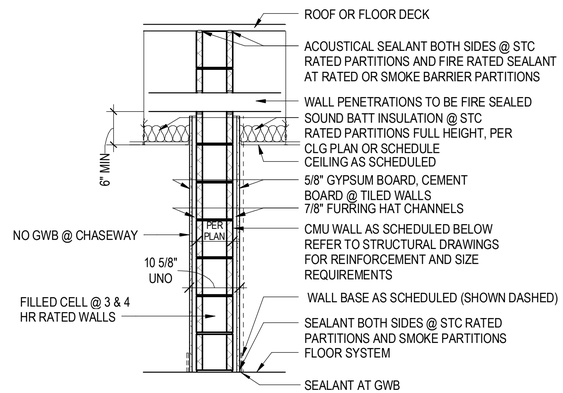

PARTITION TYPE 6A0

TYPE	FIRE RATED	CORE WIDTH	OVERALL WIDTH	STC RATED	UL LISTING	STC TEST
	NON-RATED	8"				
6A0 SIM	NON-RATED	8"				
6A0.8	NON-RATED	8"	10 5/8"			
6A0.8.c	NON-RATED	8"	10 5/8"	45	U905	TMS 0302-12
EXT	2 HOUR	PER PLAN	11 5/8"	45	U905	TMS 0302-12

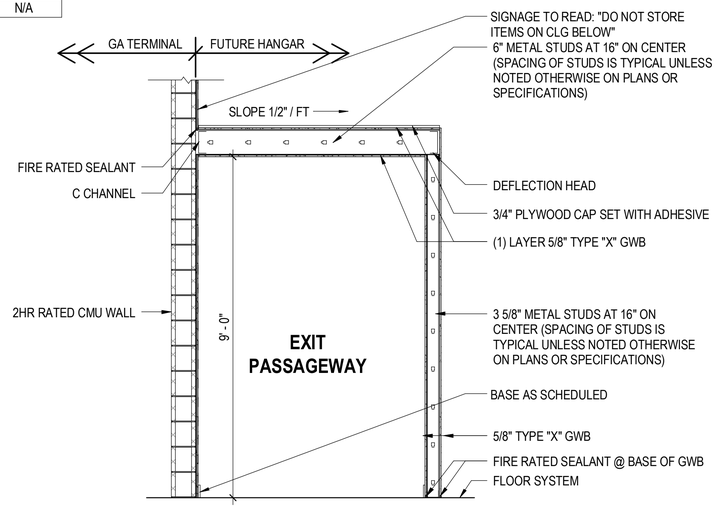

EXIT PASSAGEWAY @ HANGAR

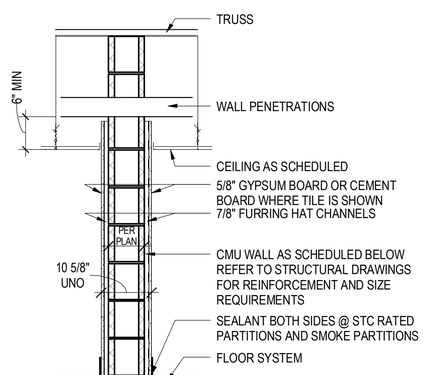

PARTITION TYPE 6A0 SIM

LEGEND - PARTITION TYPES

CORE TYPE
1 METAL STUD WALL
2 METAL STUD SHAFT WALL
3 METAL STUD (1 SIDED GYP BD)
4 WOOD STUD WALL
5 WOOD STUD (1 SIDED GYP BD)
6 CMU
7 CONCRETE
8 FURRING

CORE HEIGHT
A FULL HEIGHT (TO UNDERSIDE OF STRUCTURE)
B 6" ABOVE HIGHEST ADJACENT CEILING
C TO CEILING
D (D-Z) USER DEFINED (SPECIAL CONDITIONS)

RATING
0 NON-RATED
1 1 HOUR
2 2 HOUR
3 3 HOUR
4 4 HOUR
H 1/2 HOUR
S SMOKE RATED

CORE WIDTH
.1 METAL STUD (1 5/8")
.2 METAL STUD (2 1/2")
.3 METAL STUD (3 5/8")
.4 METAL STUD (4") WOOD STUD (3 1/2") CMU/CONCRETE (3 5/8")
.6 METAL STUD (6") WOOD STUD (5 1/2") CMU/CONCRETE (5 5/8")
.8 METAL STUD (8") WOOD STUD (7 1/4") CMU/CONCRETE (7 5/8")
.10 METAL STUD (10") WOOD STUD (9 1/4") CMU/CONCRETE (9 5/8")
.12 WOOD STUD (11 1/4") CMU/CONCRETE (11 5/8")

STC CLASSIFICATION
.a STC 35
.b STC 40
.c STC 45
.d STC 50
.e STC 55

TILE
.t TILE ONE SIDE OF WALL
.tt TILE BOTH SIDES OF WALL

FOR PERMIT & BIDDING ONLY

AVCON
TRANSFORMING TODAY'S IDEAS INTO TOMORROW'S REALITY

WILLIAM A. HAYWARD JR.
FL LICENSE NO.:AR0011007

NO.	DATE	REVISION	BY
2	11/8/21	ISSUED FOR REBID	WAH
1		um No. 1	

WALL TYPES

100% DESIGN DRAWINGS

AIRPORT TERMINAL AND HANGAR DEVELOPMENT

PREPARED FOR
DEFUNIAK SPRINGS MUNICIPAL AIRPORT

DESIGNED BY:	CH
DRAWN BY:	MW
CHECKED BY:	DT
APPROVED BY:	WAH
PROJECT NO:	176232
DATE:	11/1/2021

SHEET NUMBER
G0.04

THIS DOCUMENT CONTAINS PRIVILEGED AND PROPRIETARY INFORMATION, ALL OF WHICH IS EXPRESSLY PROVIDED BY AVCON, INC., FOR USE BY THE INTENDED RECIPIENT, AND FOR A SPECIFIC PURPOSE, WITHOUT THE EXPRESS WRITTEN CONSENT OF AVCON, INC. ANY DISTRIBUTION, REPRODUCTION, OR OTHER USE OF THIS DOCUMENT, IN WHOLE OR IN PART, IS STRICTLY PROHIBITED.

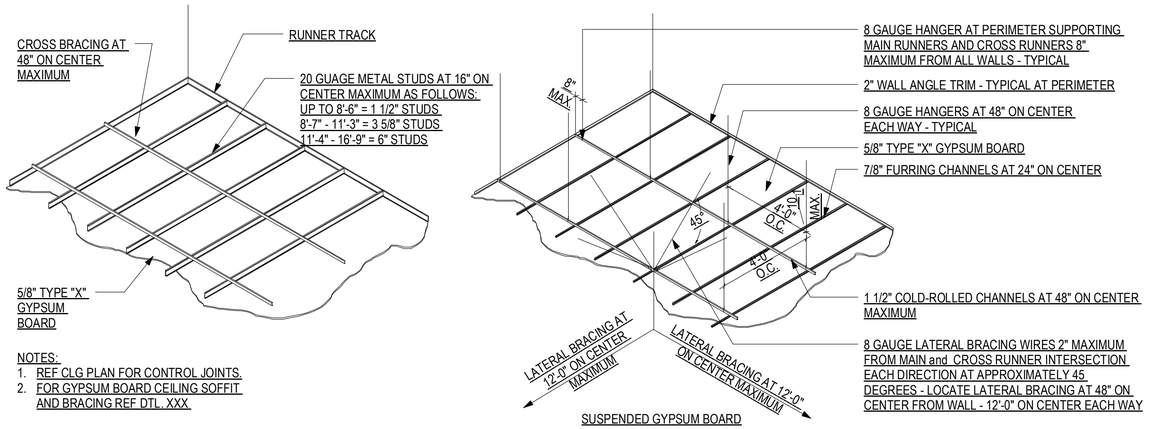

NOTES:
1. REF CLG PLAN FOR CONTROL JOINTS.
2. FOR GYPSUM BOARD CEILING SOFFIT AND BRACING REF DTL. XXX

1 GYPSUM BOARD CEILING DETAIL
SCALE: 1 1/2" = 1'-0"

L=	2"	6"	8"	10"	15"	20"	24"
STRUT SIZE	1/2" DIA STD						
	3/4" DIA STD						
	1" DIA STD						
	1-1/2" DIA STD						
	2" DIA STD						
	3" DIA STD						

NOTES:
1. CONTINUOUS WALL TRIM ANGLE
2. 8 GA. LATERAL BRACING WIRES 2 " MAX FROM MAIN RUNNER AND CROSS RUNNER INTERSECTION EACH DIRECTION AT APPROXIMATELY 45° LOCATE LATERAL BRACING AT 4'-0" FROM WALLS AND 12'-0" O.C. MAX EACH WAY (TYP.)
3. COMPRESSION STRUT AT ALL BRACING(S) - REFER TO #2 - REFER TO SCHEDULE FOR SIZE
4. 8 GA. HANGERS AT 4'-0" PERIMETER, SUPPORTING MAIN RUNNERS AND CROSS RUNNERS' 8" FROM WALL MAX. TYP.
5. 1-1/2" COLD-ROLLED CHANNELS AT 48" O.C.
6. 5/8" GYPSUM BOARD
7. 7/8" FURRING CHANNELS AT 16" O.C. MAX.

3 GYP. BD. CEILING BRACING CHART
SCALE: 1 1/2" = 1'-0"

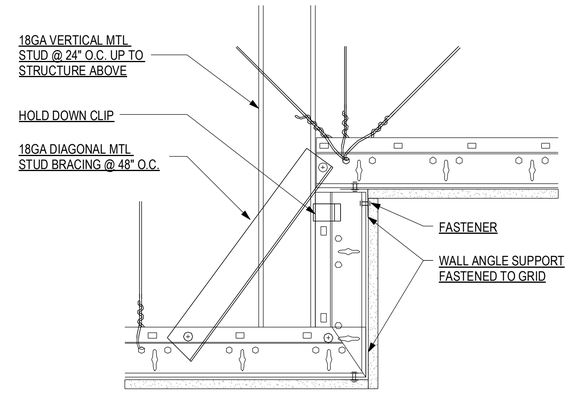

4 CEILING ELEVATION CHANGE
SCALE: 12" = 1'-0"

L=	2"	6"	8"	10"	15"	20"	24"
STRUT SIZE	1/2" DIA STD						
	3/4" DIA STD						
	1" DIA STD						
	1-1/2" STD						
	2" DIA STD						
	3" DIA STD						

NOTES:
1. 12 GA HANGER AT EACH CORNER OF ALL LIGHT FIXTURES AND EQUIPMENT WHICH ADD ANY WEIGHT TO CEILING.
2. ACOUSTICAL PANEL 24" X 48" OR 24" X 24" (REFER TO REFLECTED CEILING PLAN).
3. POP RIVET ALL TEES TO WALL ANGLE.
4. CONTINUOUS WALL TRIM ANGLE.
5. RECESSED LIGHT FIXTURE.
6. MAIN RUNNER TEES.
7. 12 GA LATERAL BRACING WIRES 2" MAX. FROM MAIN RUNNER AND CROSS RUNNER INTERSECTION EACH DIRECTION AT APPROXIMATELY 45°. LOCATE LATERAL BRACING AT 4'-0" FROM WALLS AND 12'-0" O.C. MAX. EACH WAY (TYP.)
8. CROSS RUNNER TEE
9. 12 GA HANGERS AT 4'-0" O.C. EACH WAY (TYP.)
10. 12 GA HANGERS AT 4'-0" PERIMETER. SUPPORTING MAIN RUNNERS AND CROSS RUNNERS 8" FROM WALL MAX. (TYP.)
11. COMPRESSION STRUT AT ALL BRACING(S) REFER TO #7 REFER TO SCHEDULE FOR SIZE.

2 ACOUSTICAL PANEL CLNG. BRACING CHART
SCALE: 1 1/2" = 1'-0"

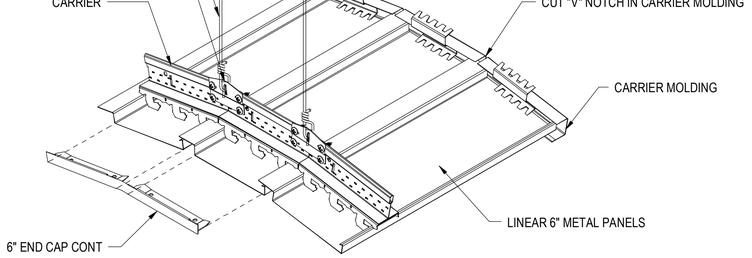

5 CURVED LINEAR MTL CEILING AXONOMETRIC

NOTE:
ADD #8 SCREW AS NECESSARY TO ENSURE THERE IS AT LEAST ONE SCREW CONNECTION AT ALL CLIPS

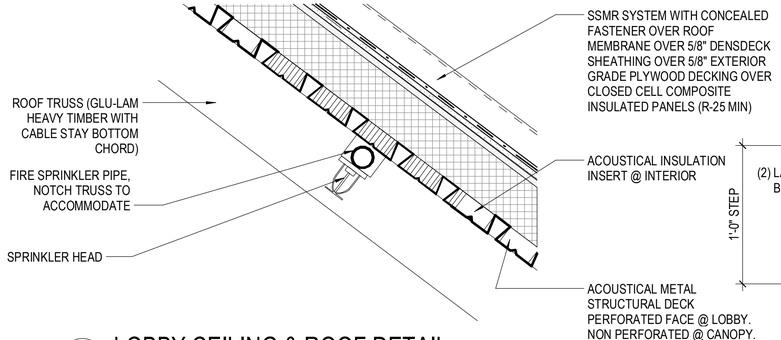

6 LOBBY CEILING & ROOF DETAIL
SCALE: 1 1/2" = 1'-0"

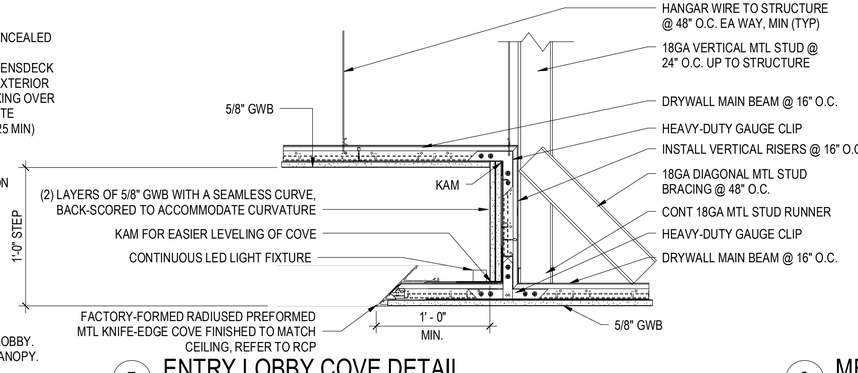

7 ENTRY LOBBY COVE DETAIL
SCALE: 1 1/2" = 1'-0"

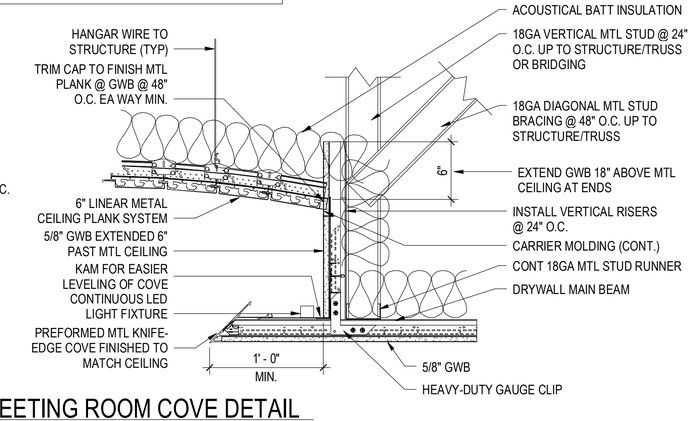

8 MEETING ROOM COVE DETAIL
SCALE: 1 1/2" = 1'-0"

FOR PERMIT & BIDDING ONLY

AVCON
TRANSFORMING TODAY'S IDEAS INTO TOMORROW'S REALITY
WILLIAM A. HAYWARD JR.
FL LICENSE NO.:AR0011007

NO.	DATE	REVISION	BY

CEILING DETAILS

100% DESIGN DRAWINGS

AIRPORT TERMINAL AND HANGAR DEVELOPMENT

PREPARED FOR

DEFUNIAK SPRINGS MUNICIPAL AIRPORT

DESIGNED BY:	CH
DRAWN BY:	AB
CHECKED BY:	DT
APPROVED BY:	WAH
PROJECT NO:	176232
DATE:	11/1/2021

SHEET NUMBER

G0.05

THIS DOCUMENT CONTAINS PRIVILEGED AND PROPRIETARY INFORMATION, ALL OF WHICH IS EXPRESSLY PROVIDED BY AVCON, INC., FOR USE BY THE INTENDED RECIPIENT, AND FOR A SPECIFIC PURPOSE, WITHOUT THE EXPRESS WRITTEN CONSENT OF AVCON, INC. ANY DISTRIBUTION, REPRODUCTION, OR OTHER USE OF THIS DOCUMENT, IN WHOLE OR IN PART, IS STRICTLY PROHIBITED.

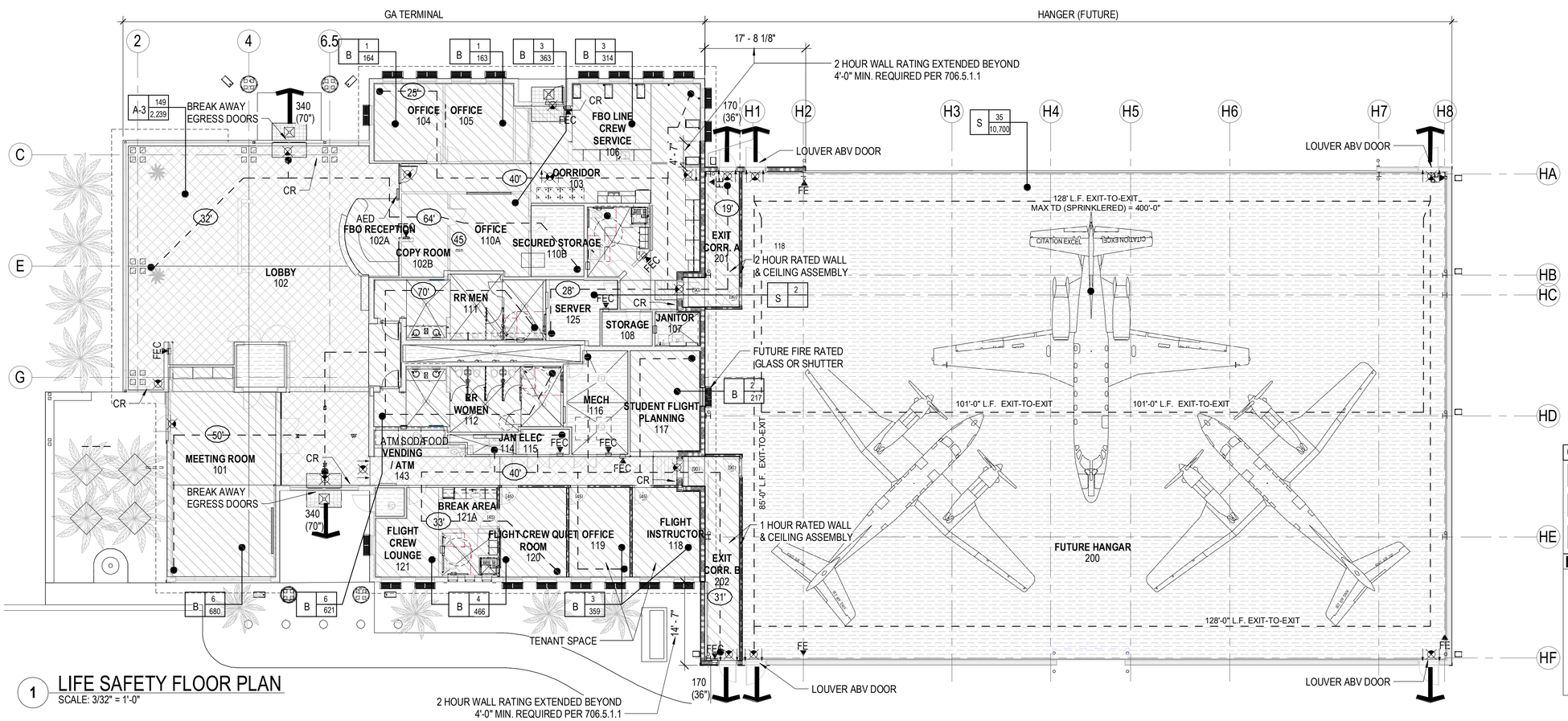

1 LIFE SAFETY FLOOR PLAN
SCALE: 3/32" = 1'-0"

OCCUPANCY LEGEND
- A-3 ASSEMBLY
- B - BUSINESS
- S - STORAGE M/E

PLAN GRAPHICS
- TRAVEL PATH
- 1 HOUR RATED WALL (TENANT SEPARATION)
- 2 HOUR RATED WALL

CODE COMPLIANCE INFORMATION

-2020 Florida Building Code (FBC) for: Building, Plumbing, Mechanical, and Fuel Gas, Energy Efficiency, and 2020 Florida Accessibility Code.
-National Electrical Code - NFPA 70, NFPA 70A, & Ch27 & 33 FBC
- Florida Fire Prevention Code 5th Edition
-2020 FBC Wind Maps & Local Wind Map
-NFPA 101 Life Safety Code
-ANSI 117.1-1980
-Americans with Disabilities Act & ACCESSIBILITY GUIDELINES (ADA) (ADAAG)
-WALTON COUNTY, FL - Building and Inspection Department

Project Information

Project Location:
DEFUNIAK SPRINGS AIRPORT
WALTON COUNTY, FL

Owner:
CITY OF DEFUNIAK SPRINGS
CONTACT: SARA BOWERS
PHONE: (850) 892-8500

Architect:
MICHAEL BAKER INTERNATIONAL
4211 WEST BOY SCOUT BLVD, SUITE 500
TAMPA, FLORIDA 33607
PHONE:813-889-3892 FAX: 813-889-3893

Building Department Contacts:
JOY HOLLAND
PHONE: (850) 892-8160

Zoning/Flood Information:
Parcel ID. - 28-3N-19-19000-005-0000
Flood Zone.- X

CODE COMPLIANCE INFORMATION

USE GROUP / OCCUPANCY CLASSIFICATION:
ASSEMBLY (Group A-3) ACCESSORY MECH/ELECT. W/ BUSINESS SPACE & STORAGE
(FBC Chapter 3, Section 303 / 303.4 A-3)

CONSTRUCTION TYPE:
GA Terminal
Type II, B, Sprinkled (FBC Chapter 6, Section 602.2)

BUILDING DATA:
FBC Table 504.3 - A,B,S - Sprinkled:

	Allowed	Designed
Number of Floors	3	1
Maximum Height	75 FT	40 FT
ALLOWABLE AREA		
A-3 Assembly Area	38,000 SF	1,715 SF
B Business Area	92,000 SF	4,302 SF
S Storage Area	70,000 SF	1,801 SF
Total Floor Area (Most Stringent)	38,000 SF	13,875 SF

Note: Provisions for area and height calculations are taken from FBC 508.3 and designed as Nonseparated occupancies.

Parapet Height-None Req. per FBC 705.11. Roof Class "A"&"B"Min	
Wind Speed = 135 mph / Risk Category II	
Thermal Resistance "R" / "U" Values: Per Design:	
Roof: R-25ci Min.	
Walls: R-12 ci Min. (MASS WALL R-VALUE)	
Glass: U < 0.45 & SHGC < or = 0.25 (Windows & Skylights) Insulated GL; Impact Rated	

RATED SEPARATIONS (FBC Table 508.4 & Chapter 7) Sprinkled:

Occupancy Separation (FBC 508.4)	2 Hour
Storage Room (FBC 707.3.9)	2 Hour
Mechanical and Electrical Assembly Room <750 SF (FBC 303.1.3)	0 Hour / 1 Hour
Exit Access Corridor <30 (FBC Table 1020.1)	0 Hour
Exit Access Corridor = or >30	0 Hour

Shaft Enclosures <4 Stories (FBC 713.4)	1 Hour
Structure (FBC Table 601)	1 Hour
Party & Fire Walls (FBC 706.4)	3 Hour
Egress Stairs (N/A)	--

OPENING PROTECTION:

Exit Access Corridors (FBC Table 716.5)	30 Min.
Toilet Rooms	None
INTERIOR FINISHES (FBC Chapter 8. Table 803.11):	
Lobbies and Corridors	Class B
Exit Access Corridors	Class B
Other Spaces	Class C
FIRE SUPPRESSION SYSTEMS (FBC Chapter 9):	
Sprinklered (NFPA 13)	Yes
Standpipe (905)	N/A
Manual Fire Alarm	Yes
Automatic Fire Alarm	Yes
Fire Extinguishers (FBC Table 906.3)	
Maximum Travel Distance	< 75FT
Quantity Required = 2	Yes (6 Provided)

OCCUPANT LOAD (FBC Table 1004.1.1):

Assembly Space, (Unconcentrated) (A-3)	2,259 SF
Airport Terminal Waiting Assembly @ 15 SF Gross / Occupant	150 Occupants
Business Occupancy	4,285 SF
Business @ 100 SF Gross / Occupant	43 Occupants
Storage Space (S)	11,307 SF
Storage @ 300 SF Gross/Occupant	38 Occupants
TOTAL OCCUPANT LOAD	231 OCCUPANTS
EGRESS REQ'D W/ DRS 0.2 IN./ OCCP. (FBC 1005.3.2)	46 IN. TOTAL

EGRESS REQUIREMENTS (FBC Ch 10):

Minimum Number of Exits (Table 1021.1)	4 Exits
Dead End Corridor (Table 1020.4)	50 Feet (Max.)
Travel Distance for Exit (A-3) Table 1017.1	250 Feet (Max.)
Travel Distance for Exit (B) Table 1017.2	300 Feet (Max.)
Travel Distance for Exit (S) Table 1017.1	400 Feet (Max.)
Corridor / Aisle Width (FBC 1020.2)	44 Inches (Min.)
Exit Door Clear Opening Width	32 Inches (Min.)
Panic Door Hardware Required Only @ Rooms w/ >50 Occupants	

ACCESSIBILITY (FBC Accessibility Code): PROVIDED

Accessible Parking / Route	6 Provided
Accessible Entrance	5 Provided
Accessible Restroom	4 Provided

TOILET FIXTURE COUNT

SPACE	OCCUPANCY	WC REQUIREMENT
Assembly - A3	150 150 / 500 = .3	1 per 500
Business - B	43 50 / 25 = 2 4 / 50 = .08 2 + .08 = 2.08	1 per 25 for the first 50 1 per 50 for the remainder
Storage - S1	38 38 / 100 = .38	1 per 100

TOTAL PROVIDED/REQUIRED WC: 5 MEN, 6 WOMEN

GUTTER ANALYSIS OF CANOPIES (IPC Ch 11):

Cubic inch volume of water to be accommodated is the roof area times the 100 year event rain fall.

Landside Canopy:

45' x 21' x 144 sq in/sq ft x 4.5" = 612,360 in³ = volume of water

The GPM, used to calculate the gutter capacity is:

612,360 cu in x 1 gal/231 in³ = 2,651 / 60 min/hr = 44.18 GPM

The GPM, used to calculate the downspouts is:

44.18 GPM / 4 downspouts = 11 GPM/downspout

IPC Table 1106.6 "Horizontal Gutter Sizing" 44 GPM @ ¼" roof slope stipulates 2 1/4" x 3" gutter is required. 6" x 6" gutters provided

Airside Canopy:

13' x 20' x 144 sq in/sq ft x 4.5" = 168,480 in³ = volume of water

The GPM, used to calculate the gutter capacity is:

168,480 in³ x 1 gal/231 in³ = 730 / 60 min/hr = 12.17 GPM

The gallons per minute, used to calculate the downspouts is:

12.17 GPM / 2 downspouts = 6 GPM/downspout

IPC Table 1106.6 "Horizontal Gutter Sizing" 12 GPM @ ¼" roof slope stipulates 1 1/2" x 2 1/2" gutter is required. 6" x 6" gutters provided.

HANGAR BUILDING

CODE COMPLIANCE INFORMATION

USE GROUP / OCCUPANCY CLASSIFICATION:
AIRCRAFT HANGAR (Group S-1)
(FBC Section 311.2 & NFPA 409 GROUP III)

CONSTRUCTION TYPE:
Hangar Building
Type II, B. Sprinkled
(FBC Chapter 6, Section 602.2)

BUILDING DATA:
FBC Table 504.3 - A,B,S - Sprinkled:

	Allowed	Designed
Number of Floors	3	1
Maximum Height	75 FT	30 FT
ALLOWABLE AREA		
S Storage Area	70,000 SF	11,480 SF
Total Floor Area (Most Stringent)	70,000 SF	11,480 SF

Note: Provisions for area and height calculations are taken from FBC 508.3 and designed as Nonseparated occupancies.

Parapet Height-None Req. per FBC 705.11. Roof Class "A"&"B"Min	
Thermal Resistance	
Wind Speed = 135 mph / Risk Category II	
"R" / "U" Values: Per Design:	
Roof: R-25	
Walls: R-12	
Glass: U < 0.45 & SHGC < or = 0.25 (Windows & Skylights) Insulated GL; Impact Rated	

RATED SEPARATIONS (FBC Table 508.4 & Chapter 7) Sprinkled:

Occupancy Separation (FBC 508.4)	1 Hour
FBC table 601 & 602 - Type IIb: NFPA table 5.3.1 - Group III, Type II (000): NFPA 8.2.3 - 1 hour separation Hangar to adjoining space/45 min doors	30' Min. 50' min.

Exit Access Corridor <30 (FBC Table 1018.1/4)	0 Hour
Exit Access Corridor = or >30 (FBC Table 1018.1)	0 Hour
Shaft Enclosures <4 Stories (FBC 708.4)	1 Hour
Structure (FBC Table 601, Note H)	1 Hour
Party & Fire Walls (FBC 503.2)	4 Hour
Egress Stairs (N/A)	--

OPENING PROTECTION:

Exit Access Corridors (FBC Table 715.3)	45 Min.
Toilet Rooms (FBC 715.4)	None
INTERIOR FINISHES (FBC Chapter 8. Table 803.9, Note B :	
Lobbies and Corridors	Class B
Exit Access Corridors	Class B
Other Spaces	Class C
FIRE SUPPRESSION SYSTEMS (FBC Chapter 9):	
Sprinklered (NFPA 13)	Yes
Standpipe (905)	N/A
Manual Fire Alarm	Yes
Automatic Fire Alarm	Yes
Fire Extinguishers (FBC Table 906.3)	
Maximum Travel Distance	< 75FT
Quantity Required = 2	Yes (6 Provided)

OCCUPANT LOAD (FBC Table 1004.1.1):

Aircraft Hangars, (S-1)	11,480 SF
Aircraft Hangar @ 500 SF Gross / Occupant	23 Occupants
TOTAL OCCUPANT LOAD	23 OCCUPANTS
EGRESS REQ'D W/ DRS 0.2 IN./ OCCP. (FBC 1005.3.2)	4.6 IN. TOTAL

EGRESS REQUIREMENTS (FBC Ch 10):

Minimum Number of Exits (Table 1021.1)	4 Exits
Dead End Corridor (Table 1020.4)	50 Feet (Max.)
Travel Distance for Exit (S) Table 1017.1	400 Feet (Max.)
Corridor / Aisle Width (FBC 1020.2)	44 Inches (Min.)
Exit Door Clear Opening Width	32 Inches (Min.)
Panic Door Hardware Required Only @ Rooms w/ >50 Occupants	

GUTTER ANALYSIS OF HANGAR ROOF (IPC Ch 11):

Cubic inch volume of water to be accommodated is the roof area times the 100 year event rain fall.

Hangar Roof:

131.5' x 87.25' x 144 sq in/sq ft x 4.5" = 7,434,747 in³ = volume of water

The GPM, used to calculate the gutter capacity is:

7,434,747 in³ x 1 gal/231 in³ = 32,185 / 60 min/hr = 536.42 GPM

The GPM, used to calculate the downspouts is:

536.42 GPM / 10 downspouts = 53.64 GPM/downspout

IPC Table 1106.6 "Horizontal Gutter Sizing" 12 GPM @ ¼" roof slope stipulates 5" x 8" gutter is required. 12" x 6" gutters provided.

IPC Table 1106.3 "Vertical Leader Sizing" 53.64 GPM requires a 2 1/2" square downspout. 6" x 6" downspouts provided.

LIFE SAFETY PLAN LEGEND

- A1 / 50 / 5000 — Space Tag: Number of Occupants; Area of Room / Space; Room / Space Occupancy Type
- XX / (XX") — Space Egress Tag: Max Number of Occupants Thru Opening; Direction of Travel; Clear Width of Door in Inches
- XX / (XX") — Building Egress Tag: Max Number of Occupants Thru Opening; Direction of Travel; Clear Width of Door in Inches
- FE — Fire Extinguisher (BRACKET MOUNTED)
- FEC — Fire Extinguisher & Cabinet
- AED — Defibrillator & Cabinet with Alarm
- Door on Hold Open / Release Device-Connect to Fire Alarm
- CR — Car Reader Access Control. Doors to Have Electric Locks & Emergency Push Button Within 5'-0" of Door. All egress doors to SIDA area (apron) to be delayed egress.
- W — Egress Window
- Exit Light, Direction of Travel, Egress Travel Distance
- New Wall
- 20 min — Door Rating (minutes)

FOR PERMIT & BIDDING ONLY

AVCON — TRANSFORMING TODAY'S IDEAS INTO TOMORROW'S REALITY

WILLIAM A. HAYWARD JR.
FL LICENSE NO.:AR0011007

NO.	DATE	REVISION	BY

LIFE SAFETY PLAN

100% DESIGN DRAWINGS

AIRPORT TERMINAL AND HANGAR DEVELOPMENT

PREPARED FOR DEFUNIAK SPRINGS MUNICIPAL AIRPORT

DESIGNED BY:	CH
DRAWN BY:	JP
CHECKED BY:	DT
APPROVED BY:	WAH
PROJECT NO:	176232
DATE:	11/1/2021

SHEET NUMBER
G1.01

THIS DOCUMENT CONTAINS PRIVILEGED AND PROPRIETARY INFORMATION, ALL OF WHICH IS EXPRESSLY PROVIDED BY AVCON, INC., FOR USE BY THE INTENDED RECIPIENT, AND FOR A SPECIFIC PURPOSE. WITHOUT THE EXPRESS WRITTEN CONSENT OF AVCON, INC., ANY DISTRIBUTION, REPRODUCTION, OR OTHER USE OF THIS DOCUMENT, IN WHOLE OR IN PART, IS STRICTLY PROHIBITED.

Design No. U905
March 17, 2004

Bearing Wall Rating — 2 HR.

Nonbearing Wall Rating — 2 HR

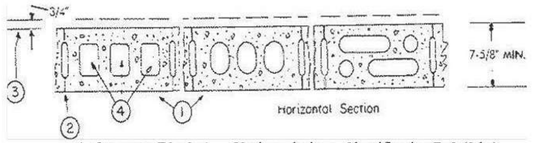

1. **Concrete Blocks*** — Various designs. Classification D-2 (2 hr).

See **Concrete Blocks** category for list of eligible manufacturers.

2. **Mortar** — Blocks laid in full bed of mortar, nom. 3/8 in. thick, of not less than 2-1/4 and not more than 3-1/2 parts of clean sharp sand to 1 part Portland cement (proportioned by volume) and not more than 50 percent hydrated lime (by cement volume). Vertical joints staggered.
3. **Portland Cement Stucco or Gypsum Plaster** — Add 1/2 hr to classification if used. Where combustible members are framed in wall, plaster or stucco must be applied on the face opposite framing to achieve a max. Classification of 1-1/2 hr. Attached to concrete blocks (Item 1).
4. **Loose Masonry Fill** — If all core spaces are filled with loose dry expanded slag, expanded clay or shale (Rotary Kiln Process), water repellant vermiculite masonry fill insulation, or silicone treated perlite loose fill insulation add 2 hr to classification.
5. **Foamed Plastic*** — (Optional-Not Shown) — 1-1/2 in. thick max, 4 ft wide sheathing attached to concrete blocks (Item 1).

THE DOW CHEMICAL CO — Type Thermax

*Bearing the UL Classification Mark

Reprinted from the Online Certifications Directory with permission from Underwriters Laboratories Inc.
Copyright © 2004 Underwriters Laboratories Inc.®

UL Online Certifications Directory

Home Quick Guide Contact Us UL.com

BXUV.U465
Fire Resistance Ratings - ANSI/UL 263

Page Bottom

Here is the .pdf / link for the one hour rated partition we need to add to sheet G2.0

Fire Resistance Ratings - ANSI/UL 263

See General Information for Fire Resistance Ratings - ANSI/UL 263

Design No. U465
May 29, 2012

Nonbearing Wall Rating — 1 HR.

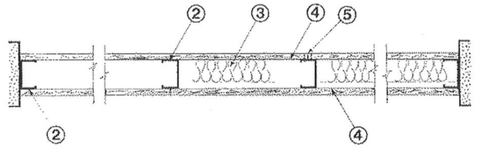

1. **Floor and Ceiling Runners —** (Not shown) — Channel shaped runners, 3-5/8 in. deep (min), 1-1/4 in. legs, formed from min No. 25 MSG galv steel, attached to floor and ceiling with fasteners spaced 24 in. OC max.

1A. **Framing Members*— Floor and Ceiling Runners —** (Not shown) — As an alternate to Item 1 - Channel shaped, min 3-5/8 in. deep, attached to floor and ceiling with fasteners 24 in. OC. max.

ALLSTEEL & GYPSUM PRODUCTS INC — Type SUPREME Framing System

CONSOLIDATED FABRICATORS CORP, BUILDING PRODUCTS DIV — Type SUPREME Framing System

QUAIL RUN BUILDING MATERIALS INC — Type SUPREME Framing System

SCAFCO STEEL STUD MANUFACTURING CO — Type SUPREME Framing System

STEEL CONSTRUCTION SYSTEMS INC — Type SUPREME Framing System

UNITED METAL PRODUCTS INC — Type SUPREME Framing System

1B. **Framing Members* - Floor and Ceiling Runners —** Not shown - In lieu of Item 1 — For use with Item 2B, proprietary channel shaped runners, 1-1/4 in. wide by min 3-5/8 in. deep fabricated from min 0.020 in. thick galv steel, attached to floor and ceiling with fasteners spaced 24 in. OC max.

CALIFORNIA EXPANDED METAL PRODUCTS CO — Viper20™ Track

CRACO MFG INC — SmarterTrack20™, SmartTrack20™

MARINO/WARE, DIV OF WARE INDUSTRIES INC — Viper20™ Track

PHILLIPS MFG CO L L C — Viper20™ Track

TELLING INDUSTRIES L L C — Viper20™ Track

1C. **Floor and Ceiling Runners —** (Not shown)—For use with Item 2C- Channel shaped, fabricated from min 20 MSG corrosion-protected or galv steel, min depth to accommodate stud size, with min 1 in. long legs, attached to floor and ceiling with fasteners spaced max 24 in. OC.

1D. **Framing Members*— Floor and Ceiling Runners —** Not shown - In lieu of Items 1 through 1C — For use with Item 2D and 4G only, proprietary channel shaped runners, 1-1/4 in. deep by min 3-5/8 in. wide fabricated from min 0.018 in. thick galv steel, attached to floor and ceiling with fasteners spaced 24 in. OC max.

CLARKDIETRICH BUILDING SYSTEMS — CD ProTRAK

DMFCWBS L L C — ProTRAK

MBA BUILDING SUPPLIES — ProTRAK

SOUTHEASTERN STUD & COMPONENTS INC — ProTRAK

STEEL STRUCTURAL SYSTEMS L L C — Tri-S ProTRAK

1E. **Framing Members*— Floor and Ceiling Runners —** Not shown - In lieu of Items 1 through 1D — For use with Item 2E and 4I only, proprietary channel shaped runners, 1-1/4 in. deep by min 3-5/8 in. wide fabricated from min 0.018 in. thick galv steel, attached to floor and ceiling with fasteners spaced 24 in. OC max.

TELLING INDUSTRIES L L C — TRUE-TRACK™

1F. **Framing Members*— Floor and Ceiling Runners —** Not shown - In lieu of Items 1 through 1E — For use with Item 2, channel shaped runners, 1-1/4 in. deep by min 3-5/8 in. wide fabricated from min 25 MSG steel, attached to floor and ceiling with fasteners spaced 24 in. OC max.

KIRII (HONG KONG) LTD — Type KIRII

1G. **Framing Members*— Floor and Ceiling Runners** — Not shown - In lieu of Items 1 through 1F — For use with Item 2, channel shaped runners, 1-1/4 in. deep by min 3-5/8 in. wide, attached to floor and ceiling with fasteners spaced 24 in. OC max.

STUDCO BUILDING SYSTEMS — CROCSTUD Track

1H. **Floor and Ceiling Runners —** (Not shown) — Channel shaped, fabricated from min 0.02 in. galv steel, min width to accommodate stud size, with min 1 in. long legs, for use with studs specified below and fabricated from min 0.02 in. galv steel or thicker, attached to floor and ceiling with fasteners spaced max 24 in. OC.

MARINO/WARE, DIV OF WARE INDUSTRIES INC — Viper20™ Track VT100.

2. **Steel Studs —** Channel shaped, 3-5/8 in. deep (min), formed from min No. 25 MSG galv steel spaced 24 in. OC max. Studs to be cut 3/4 in. less than assembly height.

2A. **Framing Members*— Steel Studs —** As an alternate to Item 2 - Channel shaped studs, min 3-5/8 in. deep, spaced a max of 24 in. OC. Studs to be cut 3/4 in. less than assembly height.

ALLSTEEL & GYPSUM PRODUCTS INC — Type SUPREME Framing System

CONSOLIDATED FABRICATORS CORP, BUILDING PRODUCTS DIV — Type SUPREME Framing System

QUAIL RUN BUILDING MATERIALS INC — Type SUPREME Framing System

SCAFCO STEEL STUD MANUFACTURING CO — Type SUPREME Framing System

STEEL CONSTRUCTION SYSTEMS INC — Type SUPREME Framing System

UNITED METAL PRODUCTS INC — Type SUPREME Framing System

2B. **Framing Members* - Steel Studs —** Not shown - In lieu of Item 2 — For use with Item 1B, proprietary channel shaped steel studs, 1-1/4 in. wide by min 3-5/8 in. deep fabricated from min 0.020 in. thick galv steel. Studs cut 3/4 in. less in length than assembly height.

CALIFORNIA EXPANDED METAL PRODUCTS CO — Viper20™

CRACO MFG INC — SmarterStud20™, SmartStud20™

MARINO/WARE, DIV OF WARE INDUSTRIES INC — Viper20™

PHILLIPS MFG CO L L C — Viper20™

TELLING INDUSTRIES L L C — Viper20™

2C. **Steel Studs —** (As an alternate to Item 2, For use with Item 4E) Channel shaped, fabricated from min 20 MSG corrosion-protected or galv steel, 3-1/2 in. min depth, spaced a max of 16 in. OC. Studs friction-fit into floor and ceiling runners. Studs to be cut 5/8 to 3/4 in. less than assembly height.

2D. **Framing Members*— Steel Studs —** As an alternate to Items 2 through 2C- For use with Item 1D and 4G only, channel shaped studs, min 3-5/8 in. wide fabricated from min 0.018 in. thick galv steel, spaced a max of 24 in. OC. Studs to be cut 1/2 in. less than assembly height.

CLARKDIETRICH BUILDING SYSTEMS — CD ProSTUD

DMFCWBS L L C — ProSTUD

MBA BUILDING SUPPLIES — ProSTUD

FOR PERMIT & BIDDING ONLY

AVCON
TRANSFORMING TODAY'S IDEAS INTO TOMORROW'S REALITY

WILLIAM A. HAYWARD JR.
FL LICENSE NO.:AR0011007

NO.	DATE	REVISION	BY

UL DESIGNS

100% DESIGN DRAWINGS

AIRPORT TERMINAL AND HANGAR DEVELOPMENT

PREPARED FOR

DEFUNIAK SPRINGS MUNICIPAL AIRPORT

DESIGNED BY:	CH
DRAWN BY:	JP
CHECKED BY:	DT
APPROVED BY:	WAH
PROJECT NO:	176232
DATE:	11/1/2021

SHEET NUMBER

G1.02

THIS DOCUMENT CONTAINS PRIVILEGED AND PROPRIETARY INFORMATION. ALL OF WHICH IS EXPRESSLY PROVIDED BY AVCON, INC.. FOR USE BY THE INTENDED RECIPIENT, AND FOR A SPECIFIC PURPOSE. WITHOUT THE EXPRESS WRITTEN CONSENT OF AVCON, INC. ANY DISTRIBUTION, REPRODUCTION, OR OTHER USE OF THIS DOCUMENT, IN WHOLE OR IN PART, IS STRICTLY PROHIBITED.

SOUTHEASTERN STUD & COMPONENTS INC — ProSTUD

STEEL STRUCTURAL SYSTEMS L L C — Tri-S ProSTUD

2E. **Framing Members*— Steel Studs —** As an alternate to Items 2 through 2D- For use with Item 1E and 4I only, channel shaped studs, min 3-5/8 in. wide fabricated from min 0.018 in. thick galv steel, spaced a max of 24 in. OC. Studs to be cut 1/2 in. less than assembly height.

TELLING INDUSTRIES L L C — TRUE-STUD™

2F. **Framing Members*— Steel Studs —** As an alternate to Items 2 through 2E- For use with Item 1F, channel shaped studs, min 3-5/8 in. wide fabricated from min 25 MSG steel, spaced a max of 24 in. OC. Studs to be cut 1/2 in. less than assembly height.

KIRII (HONG KONG) LTD — Type KIRII

2G. **Framing Members* - Steel Studs —** Not shown - In lieu of Item 2 through 2F - For use with Item 1G. Proprietary channel shaped studs, minimum 3-5/8 in. wide, Studs to be cut 1/2 in. less than the assembly height.

STUDCO BUILDING SYSTEMS — CROCSTUD

3. **Batts and Blankets*** — (Optional) — Mineral wool or glass fiber batts partially or completely filling stud cavity.

See **Batts and Blankets** (BZJZ) category for names of Classified companies.

3A. **Fiber, Sprayed* —** As an alternate to Batts and Blankets (Item 3) — Spray applied cellulose material. The fiber is applied with water to completely fill the enclosed cavity in accordance with the application instructions supplied with the product. Nominal dry density of 3.0 lb/ft^3. Alternate application method: The fiber is applied with U.S. Greenfiber LLC Type AD100 hot melt adhesive at a nominal ratio of one part adhesive to 6.6 parts fiber to completely fill the enclosed cavity in accordance with the application instructions supplied with the product. Nominal dry density of 2.5 lb/ft^3.

U S GREENFIBER L L C — Cocoon2 Stabilized or Cocoon-FRM (Fire Rated Material)

3B. **Fiber, Sprayed* —** As an alternate to Batts and Blankets (Item 3) and Item 3A - Spray applied cellulose insulation material. The fiber is applied with water to interior surfaces in accordance with the application instructions supplied with the product. Applied to completely fill the enclosed cavity. Minimum dry density of 4.3 pounds per cubic ft.

NU-WOOL CO INC — Cellulose Insulation

3C. **Fiber, Sprayed* —** As an alternate to Batts and Blankets (Item 3) - Spray applied cellulose fiber. The fiber is applied with water to completely fill the enclosed cavity in accordance with the application instructions supplied with the product. The minimum dry density shall be 4.30 lbs/ft^3.

INTERNATIONAL CELLULOSE CORP — Celbar-RL

4. **Gypsum Board* —** 5/8 in. thick, 4 ft wide, attached to steel studs and floor and ceiling track with 1 in. long, Type S steel screws spaced 8 in. OC. along edges of board and 12 in. OC in the field of the board. Joints oriented vertically and staggered on opposite sides of the assembly. When attached to item 6 (resilient channels) or 6A (furring channels), gypsum board is screw attached to furring channels with 1 in. long, Type S steel screws spaced 12 in. OC.

ACADIA DRYWALL SUPPLIES LTD — Type X

AMERICAN GYPSUM CO — Types AG-C, AGX-1, M-Glass

BEIJING NEW BUILDING MATERIALS PUBLIC LTD CO — Type DBX-1.

CGC INC — Types AR, C, IP-AR, IP-X1, IP-X2, IPC-AR, SCX, SHX, WRC or WRX.

CERTAINTEED GYPSUM INC — Types 1, EGRG, GlasRoc, Type X, Type C, SilentFX, 5/8" Easi-Lite Type X.

CERTAINTEED GYPSUM CANADA INC — Type C, Type X, Type Abuse-Resistant, 5/8" Easi-Lite Type X.

GEORGIA-PACIFIC GYPSUM L L C — Types 5, 6, 9, C, DAP, DD, DA, DAPC, DGG, DS, GPFS6, LS.

LAFARGE NORTH AMERICA INC — Types LGFC2, LGFC2A, LGFC6, LGFC6A, LGFC-C, LGFC-C/A, LGFC-WD, LGLLX.

NATIONAL GYPSUM CO — Types FSK, FSK-C, FSK-G, FSW-C, FSW-G, FSW, FSW-3, FSW-5, FSW-6, FSL.

PABCO BUILDING PRODUCTS L L C, DBA PABCO GYPSUM — Type PG-C, PG-11 or PG-9.

PANEL REY S A — Types GREX, PRX, RHX, MDX, ETX.

SIAM GYPSUM INDUSTRY (SARABURI) CO LTD — Type EX-1

TEMPLE-INLAND — Type X, Veneer Plaster Base - Type X, Water Rated - Type X, Sheathing - Type X, Soffit - Type X, TG-C, GreenGlass Type X, Type X ComfortGuard Sound Deadening Gypsum Board.

UNITED STATES GYPSUM CO — Type AR, C, FRX-G, IP-AR, IP-X1, IP-X2, IPC-AR, SCX, SHX, WRC, WRX, USGX (Joint tape and compound, Item 5, optional for use with Type USGX).

USG MEXICO S A DE C V — Type AR, C, IP-AR, IP-X1, IP-X2, IPC-AR, SCX, SHX, WRC or WRX.

4A. **Gypsum Board* —** (As alternate to Item 4) - Nom 5/8 in. thick gypsum panels with beveled, square or tapered edges, applied vertically or horizontally. Vertical joints centered over studs and staggered one stud cavity on opposite sides of studs. Horizontal edge joints and horizontal butt joints on opposite sides of studs need not be staggered or backed by steel framing. Panels attached to steel studs and floor runner with 1 in. long Type S steel screws spaced 8 in. OC when applied horizontally, or 8 in. OC along vertical

and bottom edges and 12 in. OC in the field when panels are applied vertically. When used in widths other than 48 in., gypsum panels to be installed horizontally.

CGC INC — Types AR, C, IP-AR, IP-X1, IP-X2, IPC-AR, SCX, SHX, WRC or WRX.

CERTAINTEED GYPSUM INC — Type X, Type C.

CERTAINTEED GYPSUM CANADA INC — Type X, Type C.

GEORGIA-PACIFIC GYPSUM L L C — Types DAP, DAPC, DGG, DS.

LAFARGE NORTH AMERICA INC — Type LGFC6A, LGFC-C/A

UNITED STATES GYPSUM CO — T ype AR, C, FRX-G, IP-AR, IP-X1, IP-X2, IPC-AR, SCX, SHX, WRC, WRX, , USGX (Joint tape and compound, Item 5, optional for use with Type USGX).

USG MEXICO S A DE C V — Type AR, C, IP-AR, IP-X1, IP-X2, IPC-AR, SCX, SHX, WRC or WRX.

4B. **Gypsum Board* —** (As an alternate to Items 4 or 4A) — Nom 3/4 in. thick, 4 ft wide, installed as described in Item 4A with screw length increased to 1-1/4 in.

CGC INC — Types AR, IP-AR.

UNITED STATES GYPSUM CO — Types AR, IP-AR.

USG MEXICO S A DE C V — Types AR, IP-AR.

4C. **Gypsum Board* —** As an alternate to Items 4, 4A, and 4B - Nom. 5/8 in. thick gypsum panels, with square edges, applied horizontally. Gypsum panels fastened to framing with 1 in. long bugle head steel screws spaced a max 8 in. OC, with last 2 screws

3/4 in. and 4 in. from each edge of board. Horizontal joints need not be backed by steel framing. Horizontal edge joints and horizontal butt joints on opposite sides of studs on interior walls need not be staggered or backed by steel framing.

TEMPLE-INLAND — GreenGlass Type X.

4D. **Gypsum Board* —** As an alternate to Items 4, 4A, 4B, and 4C - Nom. 5/8 in. thick gypsum panels applied horizontally. Horizontal joints need not be backed by steel framing. Horizontal edge joints and horizontal butt joints on opposite sides of studs need not be staggered. Gypsum panels fastened to framing with 1 in. long Type S steel screws 1-1/2 in. from board edges, 3 in. from board edge and every 8 in. OC in the field. Screws spaced a max 12 in. along the top and bottom edges of the wall.

NATIONAL GYPSUM CO — Types FSK, FSK-C, FSK-G, FSW-C, FSW-G, FSW.

4E. **Gypsum Board* —** (As an alternate to Items 4 through 4D) - Installed as described in Item 4. 5/8 in. thick, 4 ft. wide, paper surfaced, applied vertically only and fastened to the studs and plates with 1 in. long, Type S steel screws spaced, 8 in. OC. Not to be used with item 6.

NATIONAL GYPSUM CO — SoundBreak XP Type X Gypsum Board

4F. **Gypsum Board* —** (Not Shown) - (As an alternate to Item 4 when used as the base layer on one or both sides of wall. For direct attachment only to steel studs Item 2C) - Nom 5/8 in. thick lead backed gypsum panels with beveled, square or tapered edges, applied vertically. Vertical joints centered over studs and staggered min 1 stud cavity on opposite sides of studs. Gypsum board secured to studs with 1-1/4 in. long Type S-12 steel screws spaced 8 in. OC at perimeter and 12 in. OC in the field.

RAY-BAR ENGINEERING CORP — Type RB-LBG

4G. **Gypsum Board* —** (As an alternate to Items 4 through 4F) — For use with Items 1D and 2D only, 5/8 in. thick, 4 ft wide, attached to steel studs and floor and ceiling track with 1 in. long, Type S steel screws spaced 8 in. OC. along edges of board and 12 in. OC in the field of the board. Joints oriented vertically and staggered on opposite sides of the assembly.

LAFARGE NORTH AMERICA INC — Type LGFC6A, LGFC-C/A

NATIONAL GYPSUM CO — Types FSW

UNITED STATES GYPSUM CO — Type SCX

4H. **Wall and Partition Facings and Accessories* —** (As an alternate to Items 4 through 4G) — Nominal 5/8 in. thick, 4 ft wide panels, applied vertically and secured as described in Item 4.

SERIOUS ENERGY INC — Types QuietRock ES, QuietRock 527.

4I. **Gypsum Board* —** (As an alternate to Items 4 through 4F) — For use with Items 1E and 2E only, 5/8 in. thick, 4 ft wide, attached to steel studs and floor and ceiling track with 1 in. long, Type S steel screws spaced 8 in. OC. along edges of board and 12 in. OC in the field of the board. Joints oriented vertically and staggered on opposite sides of the assembly.

UNITED STATES GYPSUM CO — Type SCX

4J. **Gypsum Board* —** (Not Shown) - (As an alternate to Item 4 when used as the base layer on one or both sides of wall. For direct attachment only to steel studs Item 2C) - Nom 5/8 in. thick lead backed gypsum panels with beveled, square or tapered edges, applied vertically. Vertical joints centered over studs and staggered min 1 stud cavity on opposite sides of studs. Gypsum board secured to studs with 1-1/4 in. long Type S-12 steel screws spaced 8 in. OC at perimeter and 12 in. OC in the field. To be used with Lead Batten Strips (see Item 9A) or Lead Discs (see Item 10A).

MAYCO INDUSTRIES INC — Type X-Ray Shielded Gypsum

4K. **Gypsum Board* —** (As an alternate to Item 4 and 4A, not for use with Items 1D, 1E, 2D and 2E) - Nom. 5/8 in. thick gypsum panels with beveled, square or tapered edges installed as described in Item 4 and 4A.

CGC INC — Type ULX

UNITED STATES GYPSUM CO — Type ULX

USG MEXICO S A DE C V — Type ULX

4L. **Gypsum Board*** — (Not Shown) - (As an alternate to Item 4 when used as the base layer on one or both sides of wall. For direct attachment only to steel studs Item 2C). Nom 5/8 in. thick lead backed gypsum panels with beveled, square or tapered edges, applied vertically. Vertical joints centered over studs and staggered min 1 stud cavity on

FOR PERMIT & BIDDING ONLY

AVCON

TRANSFORMING TODAY'S IDEAS INTO TOMORROW'S REALITY

WILLIAM A. HAYWARD JR.
FL LICENSE NO.:AR0011007

NO.	DATE	REVISION	BY

UL DESIGNS

100% DESIGN DRAWINGS

AIRPORT TERMINAL AND HANGAR DEVELOPMENT

PREPARED FOR

DEFUNIAK SPRINGS MUNICIPAL AIRPORT

DESIGNED BY:	CH
DRAWN BY:	JP
CHECKED BY:	DT
APPROVED BY:	WAH
PROJECT NO:	176232
DATE:	11/1/2021

SHEET NUMBER

G1.03

THIS DOCUMENT CONTAINS PRIVILEGED AND PROPRIETARY INFORMATION. ALL OF WHICH IS EXPRESSLY PROVIDED BY AVCON, INC.. FOR USE BY THE INTENDED RECIPIENT, AND FOR A SPECIFIC PURPOSE. WITHOUT THE EXPRESS WRITTEN CONSENT OF AVCON, INC. ANY DISTRIBUTION, REPRODUCTION, OR OTHER USE OF THIS DOCUMENT, IN WHOLE OR IN PART, IS STRICTLY PROHIBITED.

opposite sides of studs. Wallboard secured to studs with 1-1/4 in. long Type S-12 steel screws gypsum panel steel screws spaced 8 in. OC at perimeter and 12 in. OC in the field. Lead batten strips required behind vertical joints of lead backed gypsum wallboard and optional at remaining stud locations. Lead batten strips, min 2 in. wide, max 8 ft long with a max thickness of 0.14 in. placed on the face of studs and attached to the stud with construction adhesive and two 1 in. long Type S-12 pan head steel screws, one at the top of the strip and one at the bottom of the strip. Lead discs, nominal 3/8 in. diam by max 0.085 in. thick. Compression fitted or adhered over the screw heads. Lead batten strips and discs to have a purity of 99.9% meeting the Federal specification QQ-L-201f, Grade "C".

RADIATION PROTECTION PRODUCTS INC — Type RPP-LBG

5. **Joint Tape and Compound —** Vinyl, dry or premixed joint compound, applied in two coats to joints and screw heads; paper tape, 2 in. wide, embedded in first layer of compound over all joints. As an alternate, nominal 3/32 in. thick gypsum veneer plaster may be applied to the entire surface of Classified veneer baseboard. Joints reinforced. Paper tape and joint compound may be omitted when gypsum boards are supplied with square edges.

6. **Resilient Channel —** (Optional-Not Shown) — 25 MSG galv steel resilient channels spaced vertically max 24 in. OC, flange portion attached to each intersecting stud with 1/2 in. long type S-12 pan head steel screws. May not be used with Item 4F or 4J.

6A. **Steel Framing Members (Not Shown)* —** As an alternate to Item 3, furring channels and resilient sound isolation clip as described below:

a. **Furring Channels —** Formed of No. 25 MSG galv steel. 2-3/8 in. wide by 7/8 in. deep, spaced 24 in. OC perpendicular to studs. Channels secured to studs as described in Item b. Ends of adjoining channels are overlapped 6 in. and tied together with double strand of No. 18 SWG galv steel wire near each end of overlap. As an alternate, ends of adjoining channels may be overlapped 6 in. and secured together with two self-tapping No. 6 framing screws, min 7/16 in. long at the midpoint of the overlap, with one screw on each flange of the channel.

b. **Framing Members* —** Used to attach furring channels (Item a) to studs (Item 1). Clips spaced 48 in. OC., and secured to studs with 1-5/8 in. wafer or hex head Type S steel screw through the center grommet. Furring channels are friction fitted into clips.

PAC INTERNATIONAL INC — Type RSIC-1.

6B. **Framing Members* —** Optional - Not Shown - Used as an alternate method to attach resilient channels (Item 6). Clips attached at each intersection of the resilient channel and the steel studs (Item 2). Resilient channels are friction fitted into clips, and then clips are secured to the stud with min. 1 in. long Type S-12 pan head steel screws through the center hole of the clip and the resilient channel flange.

KEENE BUILDING PRODUCTS CO INC — Type RC Assurance.

7. **Wall and Partition Facings and Accessories* —** (Optional, Not shown) — Nominal 1/2 in. thick, 4 ft wide panels, for optional use as an additional layer on one or both sides of the assembly. Panels attached in accordance with manufacturer's recommendations. When the QR-510 panel is installed between the steel framing and the UL Classified gypsum board, the required UL Classified gypsum board layer(s) is/are to be installed as indicated as to fastener type and spacing, except that the required fastener length shall be increased by a minimum of 1/2 in. Not evaluated or intended as a substitute for the required layer(s) of UL Classified Gypsum Board.

SERIOUS ENERGY INC — Type QuietRock QR-510.

8. **Mineral and Fiber Board* —** (Optional, Not shown) — For optional use as an additional layer on one side of wall. Nom 1/2 in. thick, 4 ft wide with long dimension parallel and centered over studs. Attached to studs and floor and ceiling runners with 1-5/8 in. long Type S steel screws, spaced 12 in. OC. The required UL Classified gypsum board layer(s) is/are to be installed as indicated as to fastener type and spacing, except that the required fastener length shall be increased by a minimum of 1/2 in. Not evaluated or intended as a substitute for the required layer(s) of UL Classified Gypsum Board.

HOMASOTE CO — Homasote Type 440-32

9. **Lead Batten Strips** — (Not Shown, For Use With Item 4E) - Lead batten strips, min 1-1/2 in. wide, max 10 ft long with a max thickness of 0.125 in. Strips placed on the interior face of studs and attached from the exterior face of the stud with two 1 in. long Type S-12 pan head steel screws, one at the top of the strip and one at the bottom of the strip. Lead batten strips to have a purity of 99.9% meeting the Federal specification QQ-L-201f, Grade "C". Lead batten strips required behind vertical joints of lead backed gypsum board (Item 4E) and optional at remaining stud locations. Required behind vertical joints.

9A. **Lead Batten Strips —** (Not Shown, for use with Item 4J) Lead batten strips, 2 in. wide, max 10 ft long with a max thickness of 0.140 in. Strips placed on the face of studs and attached to the stud with two min. 1 in. long min. Type S-8 pan head steel screws, one at the top of the strip and one at the bottom of the strip or with one min. 1 in. long min. Type S-8 pan head steel screw at the top of the strip. Lead batten strips to have a purity of 99.9% meeting the Federal specification QQ-L-201f, Grades "A, B, C or D". Lead batten strips required behind vertical joints of lead backed gypsum wallboard (Item 4J) and optional at remaining stud locations.

10. **Lead Discs or Tabs —** (Not Shown, For Use With Item 4E) - Used in lieu of or in addition to the lead batten strips (Item 8) or optional at other locations - Max 3/4 in. diam by max 0.125 in. thick lead discs compression fitted or adhered over steel screw heads or max 1/2 in. by 1-1/4 in. by max 0.125 in. thick lead tabs placed on gypsum boards (Item 4E) underneath screw locations prior to the installation of the screws. Lead discs or tabs to have a purity of 99.9% meeting the Federal specification QQ-L-201f, Grade "C".

10A. **Lead Discs —** (Not Shown, for use with Item 4J) Max 5/16 in. diam by max 0.140 in. thick lead discs compression fitted or adhered over steel screw heads. Lead discs to

have a purity of 99.9% meeting the Federal Specification QQ-L-201f, Grades "A, B, C or D".

*Bearing the UL Classification Mark

Last Updated on 2012-05-29

Questions? Print this page Terms of Use Page Top

© 2012 UL LLC

When the UL Leaf Mark is on the product, or when the word "Environment" is included in the UL Mark, please search the UL Environment database for additional information regarding this product's certification.

The appearance of a company's name or product in this database does not in itself assure that products so identified have been manufactured under UL's Follow-Up Service. Only those products bearing the UL Mark should be considered to be Listed and covered under UL's Follow-Up Service. Always look for the Mark on the product.

UL permits the reproduction of the material contained in the Online Certification Directory subject to the following conditions: 1. The Guide Information, Designs and/or Listings (files) must be presented in their entirety and in a non-misleading manner, without any manipulation of the data (or drawings). 2. The statement "Reprinted from the Online Certifications Directory with permission from UL" must appear adjacent to the extracted material. In addition, the reprinted material must include a copyright notice in the following format: "© 2012 UL LLC".

FOR PERMIT & BIDDING ONLY

AVCON

TRANSFORMING TODAY'S IDEAS INTO TOMORROW'S REALITY

THIS DOCUMENT CONTAINS PRIVILEGED AND PROPRIETARY INFORMATION, ALL OF WHICH IS EXPRESSLY PROVIDED BY AVCON, INC., FOR USE BY THE INTENDED RECIPIENT, AND FOR A SPECIFIC PURPOSE. WITHOUT THE EXPRESS WRITTEN CONSENT OF AVCON, INC., ANY DISTRIBUTION, REPRODUCTION, OR OTHER USE OF THIS DOCUMENT, IN WHOLE OR IN PART, IS STRICTLY PROHIBITED.

WILLIAM A. HAYWARD JR.
FL LICENSE NO.:AR0011007

NO.	DATE	REVISION	BY

UL DESIGNS

100% DESIGN DRAWINGS

AIRPORT TERMINAL AND HANGAR DEVELOPMENT

PREPARED FOR

DEFUNIAK SPRINGS MUNICIPAL AIRPORT

DESIGNED BY:	CH
DRAWN BY:	JP
CHECKED BY:	DT
APPROVED BY:	WAH
PROJECT NO:	176232
DATE:	11/1/2021

SHEET NUMBER

G1.04

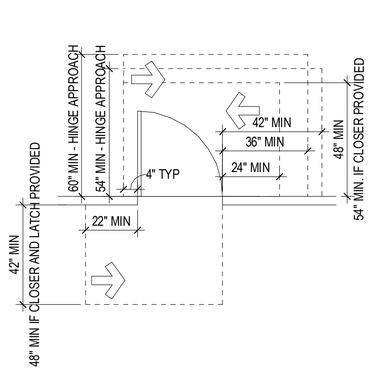

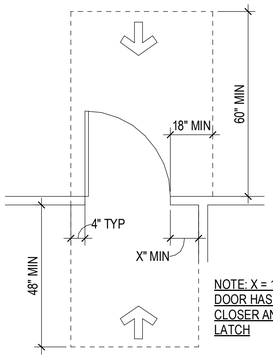

NOTE: X = 12 IF DOOR HAS BOTH A CLOSER AND A LATCH

DOOR CLEARANCES

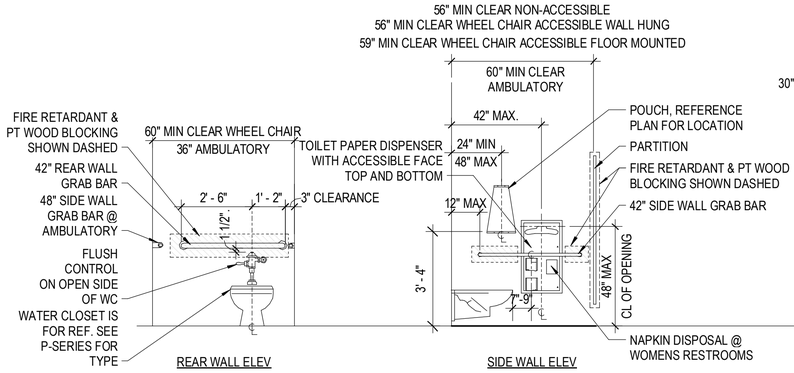

TOILET STALLS

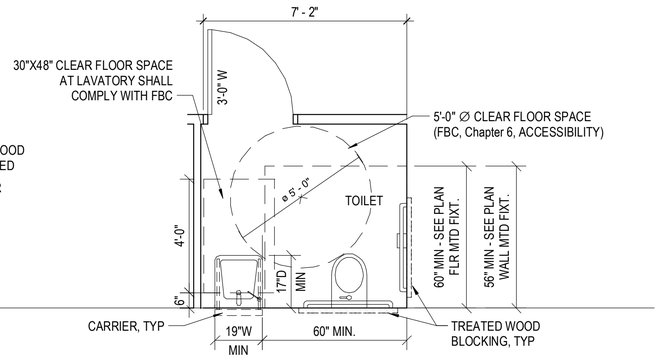

1. TOE CLEARANCE AT THE FRONT OF THE PARTITION IS NOT REQUIRED IN A COMPARTMENT GREATER THAN 62" DEEP WITH A WALL-HUNG WATER CLOSET OR 65" DEEP WITH A FLOOR-MOUNTED WATER CLOSET. TOE CLEARANCE AT THE SIDE IS NOT REQUIRED IN A COMPARTMENT GREATER THAN 66" WIDE.
2. WHERE 6 OR MORE STALLS ARE PROVIDED, IN ADDITION TO STANDARD STALL, PROVIDE AT LEAST 1 AMBULATORY STALL 36" WIDE WITH A DOOR THAT SWINGS OUT AND THE DEPTH OF THE STALL AS REQUIRED TO ACCOMMODATE LENGTH OF GRAB BAR. STALL SHALL BE IN ACCORDANCE TO APPLICABLE PLUMBING CODE.

TOILET ROOMS WITH STALLS

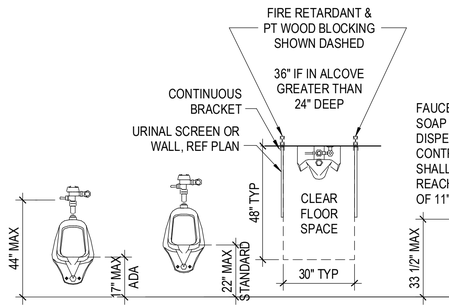

URINAL

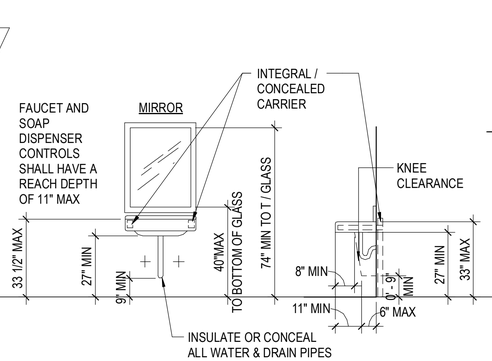

SINKS

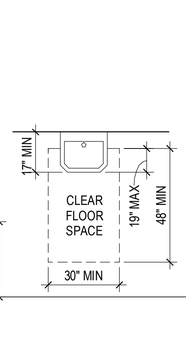

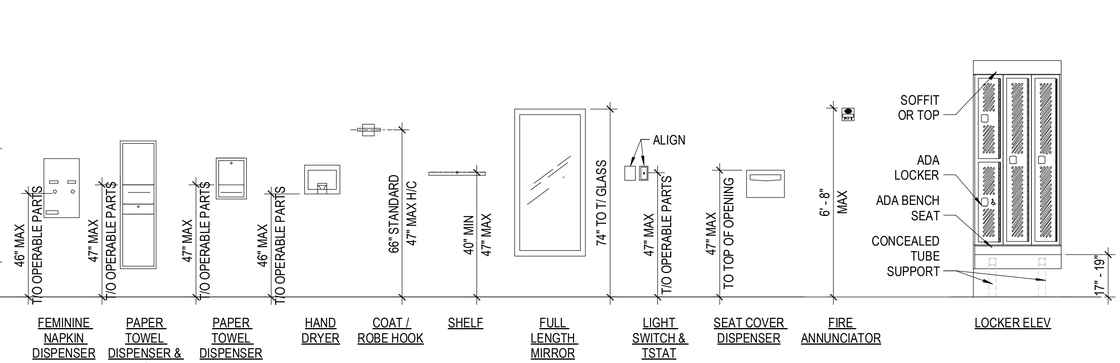

TOILET FIXTURES & ACCESSORIES

OBSTRUCTED REACH TO OPERABLE PARTS ON DISPENSERS AND HAND DRYERS SHALL COMPLY WITH ANSI

ADA ACCESSIBLE LOCKERS

NOTE: LOCK SHALL NOT REQ. PINCHING, GRASPING OR TWISTING OF THE WRIST

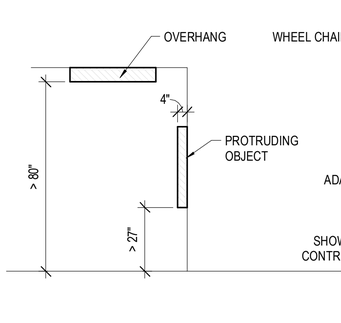

LIMITS OF PROTRUDING OBJECTS

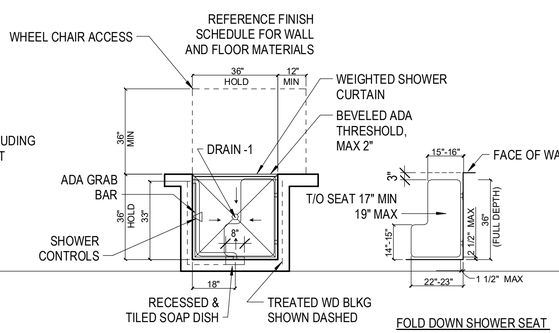

TRANSFER SHOWER STALLS

FOLD DOWN SHOWER SEAT

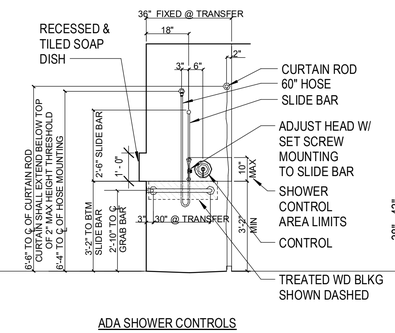

ACCESSIBLE SHOWER CLEARANCES

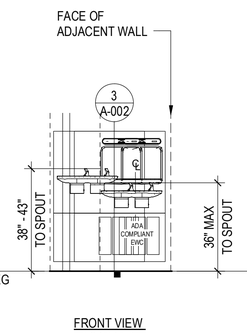

FRONT VIEW (DOUBLE)

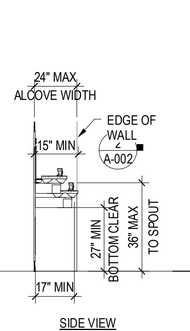

SIDE VIEW

DRINKING FOUNTAINS

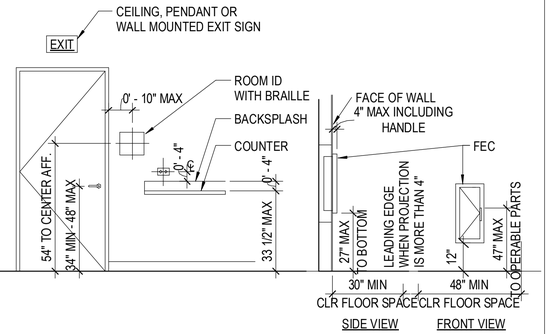

SIGNS & COUNTERS

FIRE EXTINGUISHER

FOR PERMIT & BIDDING ONLY

AVCON

TRANSFORMING TODAY'S IDEAS INTO TOMORROW'S REALITY

WILLIAM A. HAYWARD JR.
FL LICENSE NO.:AR0011007

NO.	DATE	REVISION	BY

TYPICAL ADA DETAILS

100% DESIGN DRAWINGS

AIRPORT TERMINAL AND HANGAR DEVELOPMENT

PREPARED FOR

DEFUNIAK SPRINGS MUNICIPAL AIRPORT

DESIGNED BY:	CH
DRAWN BY:	AB
CHECKED BY:	DT
APPROVED BY:	WAH
PROJECT NO:	176232
DATE:	11/1/2021

SHEET NUMBER

A-002

THIS DOCUMENT CONTAINS PRIVILEGED AND PROPRIETARY INFORMATION. ALL OF WHICH IS EXPRESSLY PROVIDED BY AVCON, INC.. FOR USE BY THE INTENDED RECIPIENT, AND FOR A SPECIFIC PURPOSE. WITHOUT THE EXPRESS WRITTEN CONSENT OF AVCON, INC. ANY DISTRIBUTION, REPRODUCTION, OR OTHER USE OF THIS DOCUMENT, IN WHOLE OR IN PART, IS STRICTLY PROHIBITED.

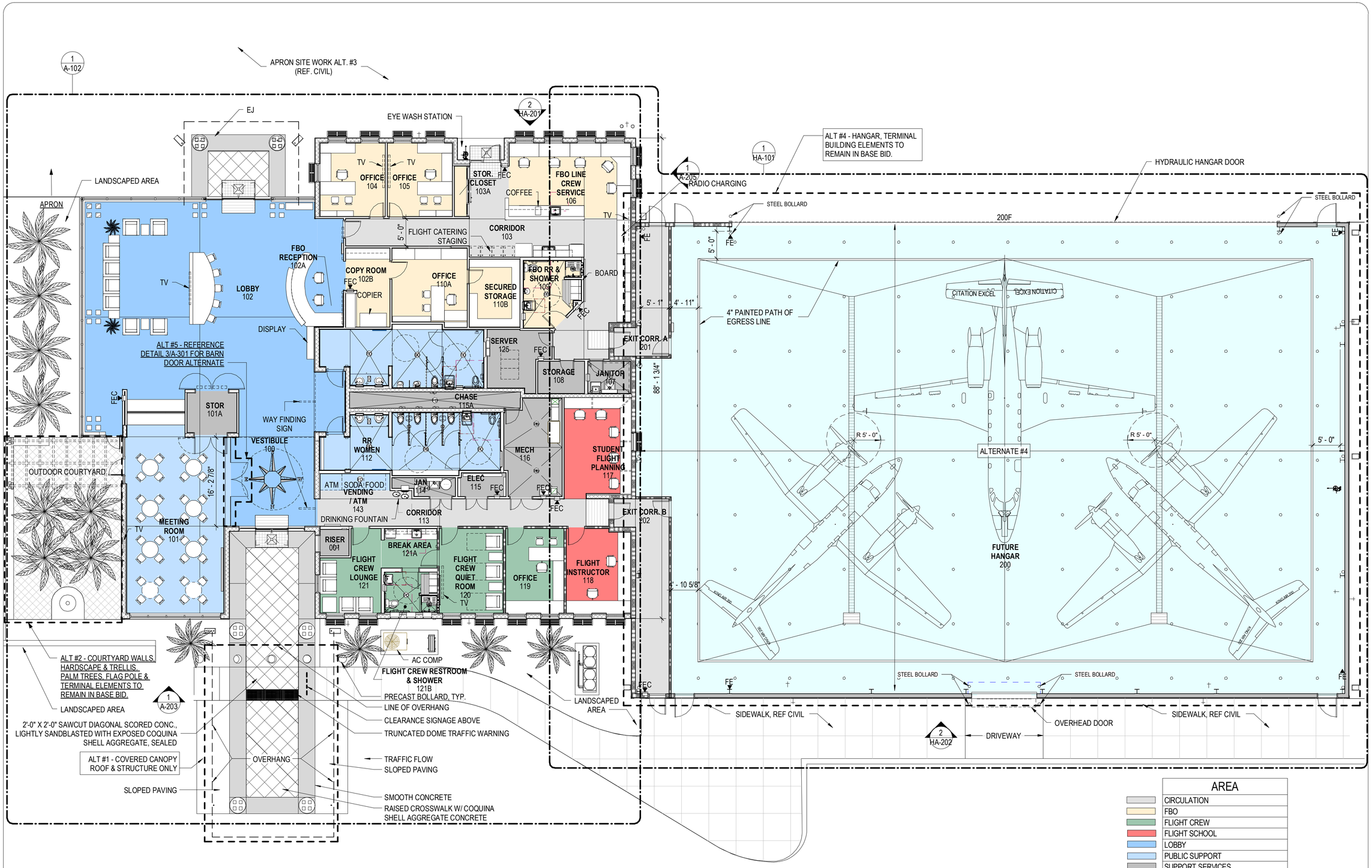

AREA
CIRCULATION
FBO
FLIGHT CREW
FLIGHT SCHOOL
LOBBY
PUBLIC SUPPORT
SUPPORT SERVICES
HANGAR

LIMITS OF ALTERNATE

FOR ADDITIONAL ALTERNATES, REFER TO CIVIL DWGS. REFER TO SPECIFICATIONS FOR DETAILED DESCRIPTIONS.

0 4' - 0" 8' - 0" 16' - 0"

SCALE: 1/8" = 1' - 0"

1 OVERALL FLOOR PLAN & ALTERNATES

N.T.S.

PLAN NORTH

N

FOR PERMIT & BIDDING ONLY

AVCON

TRANSFORMING TODAY'S IDEAS INTO TOMORROW'S REALITY

WILLIAM A. HAYWARD JR.
FL LICENSE NO.:AR0011007

NO.	DATE	REVISION	BY
1		addendum No. 1	H
2			

OVERALL FLOOR PLAN

100% DESIGN DRAWINGS

AIRPORT TERMINAL AND HANGAR DEVELOPMENT

PREPARED FOR

DEFUNIAK SPRINGS MUNICIPAL AIRPORT

DESIGNED BY:	CH
DRAWN BY:	MW
CHECKED BY:	DT
APPROVED BY:	WAH
PROJECT NO:	176232
DATE:	11/1/2021

SHEET NUMBER

A-101

THIS DOCUMENT CONTAINS PRIVILEGED AND PROPRIETARY INFORMATION, ALL OF WHICH IS EXPRESSLY PROVIDED BY AVCON, INC., FOR USE BY THE INTENDED RECIPIENT, AND FOR A SPECIFIC PURPOSE. WITHOUT THE EXPRESS WRITTEN CONSENT OF AVCON, INC. ANY DISTRIBUTION, REPRODUCTION, OR OTHER USE OF THIS DOCUMENT, IN WHOLE OR IN PART, IS STRICTLY PROHIBITED.

1 1ST FLOOR PLAN - AREA A

SCALE: 3/16" = 1'-0"

PLAN NORTH

SHEET NOTES:

1. DIMENSIONS ARE TAKEN FROM OUTSIDE EDGES OF CMU.
2. PROVIDE RECESSED WALL HYDRANT AT EACH RESTROOM UNDERNEATH SINKS, EXCEPT IN ADA STALLS.
3. REFER TO DIMENSION, LIFE SAFETY & LARGE SCALE PLANS FOR ADDITIONAL INFORMATION.
4. FLIGHT CATERING CARTS, COPIER & COMPUTER EQUIPMENT, FURNITURE & TV'S SHOWN DASHED TO BE PROVIDED AS PART OF FURNITURE ALLOWANCE. VENDING MACHINE BY OWNER. FILE CABINETS BELOW COUNTER TO BE PART OF MILLWORK.

0 4' - 0" 8' - 0" 16' - 0"

SCALE:3/16" = 1' - 0"

FOR PERMIT & BIDDING ONLY

AVCON

TRANSFORMING TODAY'S IDEAS INTO TOMORROW'S REALITY

WILLIAM A. HAYWARD JR.
FL LICENSE NO.:AR0011007

NO.	DATE	REVISION	BY
		andum No. 1	AH

1ST FLOOR PLAN

100% DESIGN DRAWINGS

AIRPORT TERMINAL AND HANGAR DEVELOPMENT

PREPARED FOR

DEFUNIAK SPRINGS MUNICIPAL AIRPORT

DESIGNED BY:	CH
DRAWN BY:	MW
CHECKED BY:	DT
APPROVED BY:	WAH
PROJECT NO:	176232
DATE:	11/1/2021

SHEET NUMBER

A-102

THIS DOCUMENT CONTAINS PRIVILEGED AND PROPRIETARY INFORMATION, ALL OF WHICH IS EXPRESSLY PROVIDED BY AVCON, INC., FOR USE BY THE INTENDED RECIPIENT, AND FOR A SPECIFIC PURPOSE. WITHOUT THE EXPRESS WRITTEN CONSENT OF AVCON, INC., ANY DISTRIBUTION, REPRODUCTION, OR OTHER USE OF THIS DOCUMENT, IN WHOLE OR IN PART, IS STRICTLY PROHIBITED.

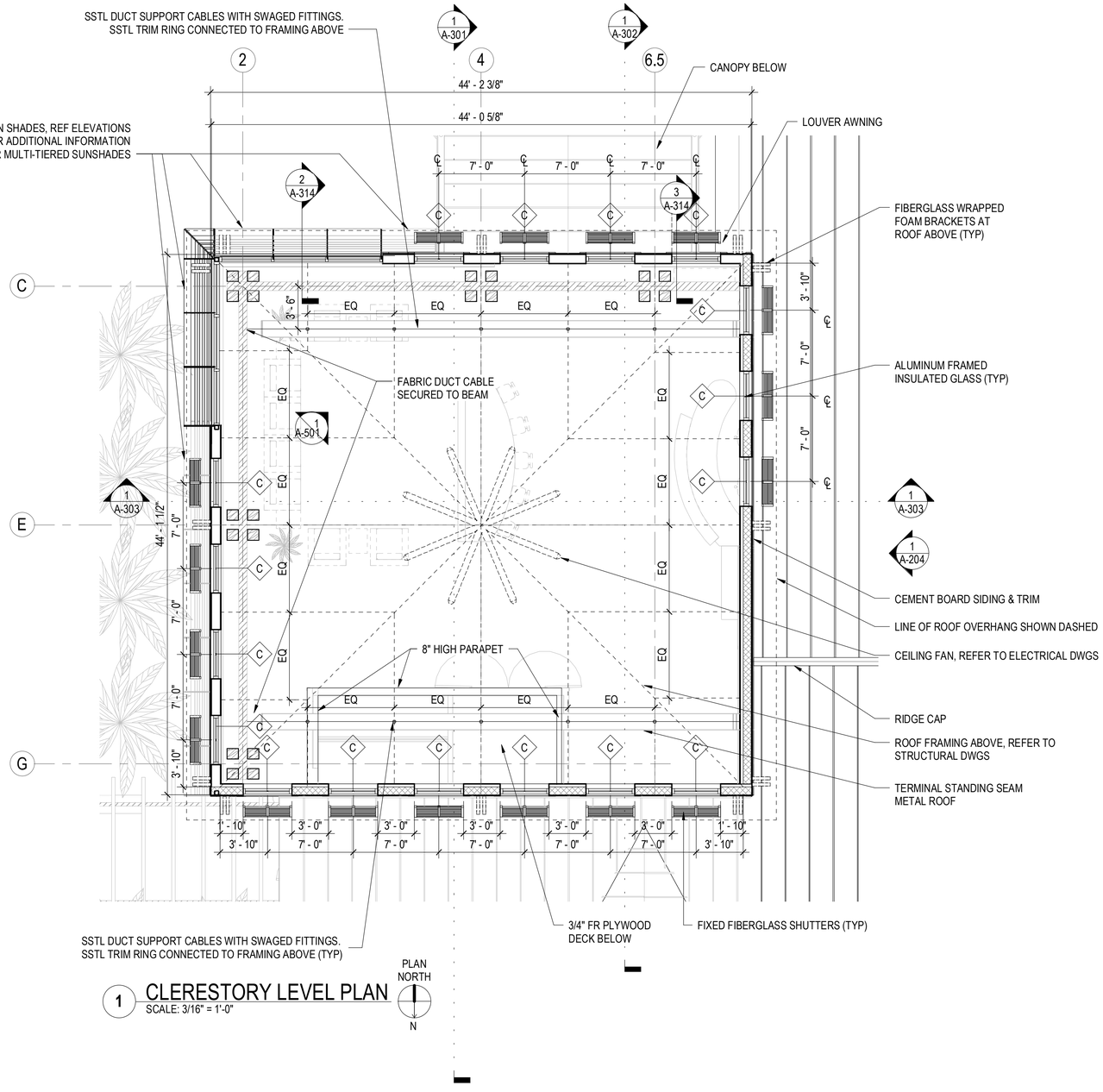

1 CLERESTORY LEVEL PLAN
SCALE: 3/16" = 1'-0"

FOR PERMIT & BIDDING ONLY

AVCON
TRANSFORMING TODAY'S IDEAS INTO TOMORROW'S REALITY

WILLIAM A. HAYWARD JR.
FL LICENSE NO.:AR0011007

NO.	DATE	REVISION	BY

CLERESTORY PLAN

100% DESIGN DRAWINGS

AIRPORT TERMINAL AND HANGAR DEVELOPMENT

PREPARED FOR

DEFUNIAK SPRINGS MUNICIPAL AIRPORT

DESIGNED BY:	Designer
DRAWN BY:	Author
CHECKED BY:	Checker
APPROVED BY:	WAH
PROJECT NO:	176232
DATE:	11/1/2021

SHEET NUMBER

A-103

THIS DOCUMENT CONTAINS PRIVILEGED AND PROPRIETARY INFORMATION, ALL OF WHICH IS EXPRESSLY PROVIDED BY AVCON, INC. FOR USE BY THE INTENDED RECIPIENT, AND FOR A SPECIFIC PURPOSE. WITHOUT THE EXPRESS WRITTEN CONSENT OF AVCON, INC. ANY DISTRIBUTION, REPRODUCTION, OR OTHER USE OF THIS DOCUMENT, IN WHOLE OR IN PART, IS STRICTLY PROHIBITED.

DIMENSION LOCATED @ CENTER OF STOREFRONT

RECESSED WALK OFF GRILLE @ EXTERIOR W/ DRY WELL BELOW

RECESSED WALK OFF MAT @ INTERIOR

AT BASE WALL

LINE OF SILL @ BASE OF WALL (TYP)

FLOOR SLOPE (TYP)

ALIGN CJ W/ FACE OF WALL (TYP)

RECESSED WALKOFF GRILLE W/ DRY WELL BELOW

RECESSED WALKOFF MAT

KNEE WALL

REFER TO EXTERIOR WALL SECTIONS FOR WALL ASSEMBLY, INSULATION & ROOF OVERHANG (TYP)

SLOPE FLOOR (TYP)

RECESSED WALKOFF MAT 4' MIN. @ OPPOSING DOOR SWINGS (TYP)

TERRAZZO INSERT

TREE WELL (TYP)

FLAG POLE

MATCHLINE AA

5'-0" MIN. CLEAR

FLOOR SLOPE

RECESSED FLOOR DEPRESSION

CJ

1 1ST FLOOR PLAN - DIMENSIONS & TAGS

SCALE: 3/16" = 1'-0"

FOR PERMIT & BIDDING ONLY

AVCON

TRANSFORMING TODAY'S IDEAS INTO TOMORROW'S REALITY

THIS DOCUMENT CONTAINS PRIVILEGED AND PROPRIETARY INFORMATION, ALL OF WHICH IS EXPRESSLY PROVIDED BY AVCON, INC., FOR USE BY THE INTENDED RECIPIENT, AND FOR A SPECIFIC PURPOSE. WITHOUT THE EXPRESS WRITTEN CONSENT OF AVCON, INC., ANY DISTRIBUTION, REPRODUCTION, OR OTHER USE OF THIS DOCUMENT, IN WHOLE OR IN PART, IS STRICTLY PROHIBITED.

WILLIAM A. HAYWARD JR.
FL LICENSE NO.:AR0011007

NO.	DATE	REVISION	BY
2	11/8/21	ISSUED FOR REBID um No. 1	WAH

DIMENSION PLAN

100% DESIGN DRAWINGS

AIRPORT TERMINAL AND HANGAR DEVELOPMENT

PREPARED FOR

DEFUNIAK SPRINGS MUNICIPAL AIRPORT

DESIGNED BY:	Designer
DRAWN BY:	Author
CHECKED BY:	Checker
APPROVED BY:	WAH
PROJECT NO:	176232
DATE:	11/1/2021

SHEET NUMBER

A-111

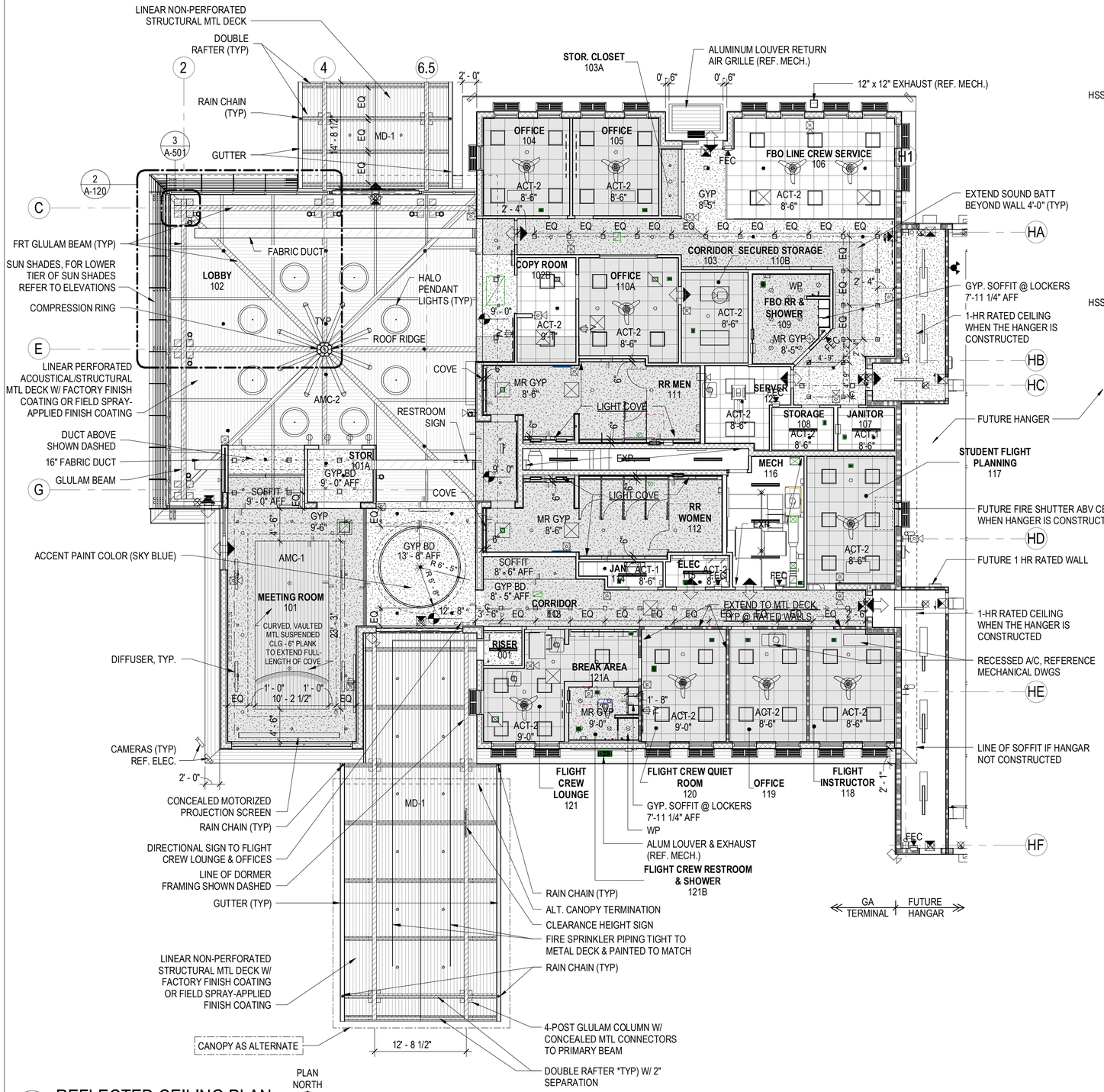

1 REFLECTED CEILING PLAN
SCALE: 1/8" = 1'-0"

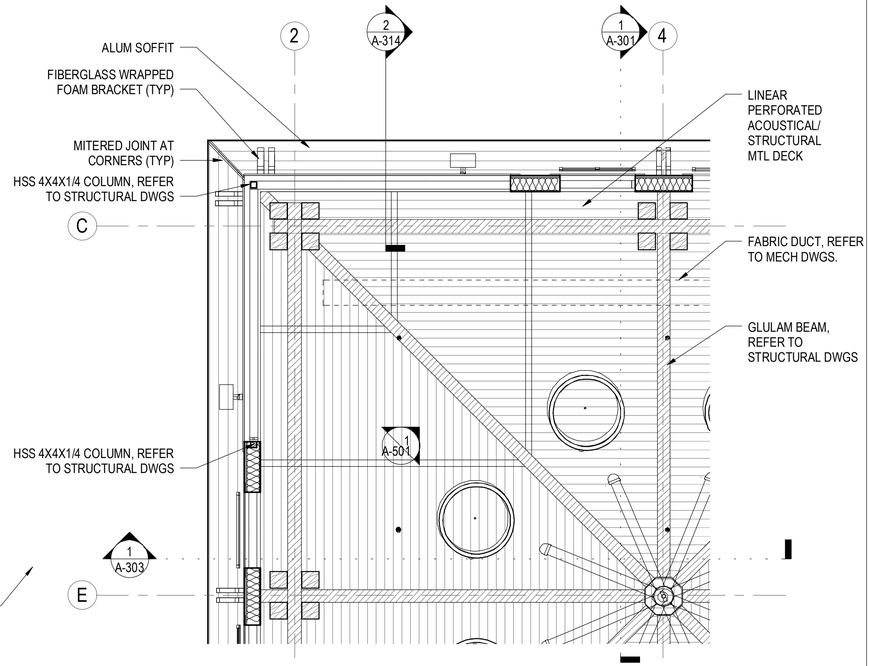

2 UPPER RCP PARTIAL PLAN (1 QUADRANT)
SCALE: 1/4" = 1'-0"

SHEET NOTES:

1. FIRE SPRINKLERS & PIPING TO BE TIGHT TO METAL DECK & EXPOSED PIPING TO BE PAINTED TO MATCH CEILING DECKING.
2. ALL GLULAM BEAMS TO BE FIRE RETARDANT TREATED.
3. PROVIDE ACCESS PANELS ABOVE GWB CEILINGS AS REQUIRED FOR ACCESS TO EQUIP. ACCESS PANEL LAYOUT TO BE CONFIRMED WITH ARCHITECT PRIOR TO EQUIP INSTALLATION & ROUGH-IN.

RCP LEGEND

- 2'x2' ACOUSTICAL CEILING PANEL
- 2'x2' ACOUSTICAL CEILING PANEL BY TENANTS (FUTURE)
- PAINTED GYPSUM WALLBOARD CEILING (MR = MOISTURE RESISTANT)
- EXPOSED STRUCTURE
- 6" METAL PLANK CEILING (PERFORATED ACOUSTICAL METAL CEILING @ INTERIOR) (NON-ACOUSTICAL @ EXTERIOR)
- 6" METAL PLANK CEILING (PERFORATED ACOUSTICAL METAL CEILING @ INTERIOR) & BATT INSULATION
- ACOUSTICAL SOUND BATT INSULATION ABOVE CEILING EXTENDED 4' BEYOND WALL
- WAY FINDING SIGN
- CEILING FAN
- PENDANT LIGHTING FIXTURES, REF ELECTRICAL DRAWINGS
- FABRIC DUCT WORK
- ALUMINUM SOFFIT
- WP WATERPROOF LIGHT, REF ELECTRICAL DRAWINGS
- LIGHTING FIXTURES, REF ELECTRICAL DRAWINGS
- ILLUMINATED EXIT SIGN, REF ELECTRICAL DRAWINGS
- SECURITY CAMERA, REF ELECTRICAL DRAWINGS
- SUSPENDED TELEVISION, REF ELECTRICAL DRAWINGS
- WALL MOUNTED TELEVISION, BY OWNER
- MECHANICAL DIFFUSER,REF MECHANICAL DRAWINGS
- MECHANICAL GRILLE, REF MECHANICAL DRAWINGS
- MECHANICAL FIXTURE, REF MECHANICAL DRAWINGS
- MECHANICAL FIXTURE, REF MECHANICAL DRAWINGS - SLOT DIFFUSER
- CONCEALED FIRE SPRINKLER
- SEMI RECESSED FIRE SPRINKLER
- PENDANT FIRE SPRINKLER

0 4' - 0" 8' - 0" 16' - 0"
SCALE: 1/8" = 1' - 0"

FOR PERMIT & BIDDING ONLY

AVCON
TRANSFORMING TODAY'S IDEAS INTO TOMORROW'S REALITY

WILLIAM A. HAYWARD JR.
FL LICENSE NO.:AR0011007

NO.	DATE	REVISION	BY
2	11/8/21	ISSUED FOR REBID addendum No. 1	WAH JH

REFLECTED CEILING PLAN

100% DESIGN DRAWINGS

AIRPORT TERMINAL AND HANGAR DEVELOPMENT

PREPARED FOR
DEFUNIAK SPRINGS MUNICIPAL AIRPORT

DESIGNED BY:	CH
DRAWN BY:	JP - MW
CHECKED BY:	DT
APPROVED BY:	WAH
PROJECT NO:	176232
DATE:	11/1/2021

SHEET NUMBER
A-120

THIS DOCUMENT CONTAINS PRIVILEGED AND PROPRIETARY INFORMATION, ALL OF WHICH IS EXPRESSLY PROVIDED BY AVCON, INC., FOR USE BY THE INTENDED RECIPIENT, AND FOR A SPECIFIC PURPOSE. WITHOUT THE EXPRESS WRITTEN CONSENT OF AVCON, INC., ANY DISTRIBUTION, REPRODUCTION, OR OTHER USE OF THIS DOCUMENT, IN WHOLE OR IN PART, IS STRICTLY PROHIBITED.

NOTES - ROOF PLANS

1. REFER TO MECHANICAL, PLUMBING AND ELECTRICAL DRAWINGS FOR ADDITIONAL ROOF ELEMENT INFORMATION
2. CONTRACTOR SHALL COORDINATE EXACT LOCATION OF ROOF DRAINING TO MAKE SURE NOT TO INTERFERE WITH ANY STRUCTURAL MEMBERS - LEADERS SHALL BE LOCATED TO CLEAR AND SLOPE AS REQUIRED BY APPLICABLE CODES
3. CONTRACTOR TO VERIFY AND COORDINATE EXACT LOCATIONS OF PENETRATIONS SO AS NOT TO INTERFERE WITH MAJOR STRUCTURAL MEMBERS
4. ALL FASTENERS SHALL BE CONCEALED
5. ALL LIGHTNING ARRESTOR WIRING SHALL BE CONCEALED

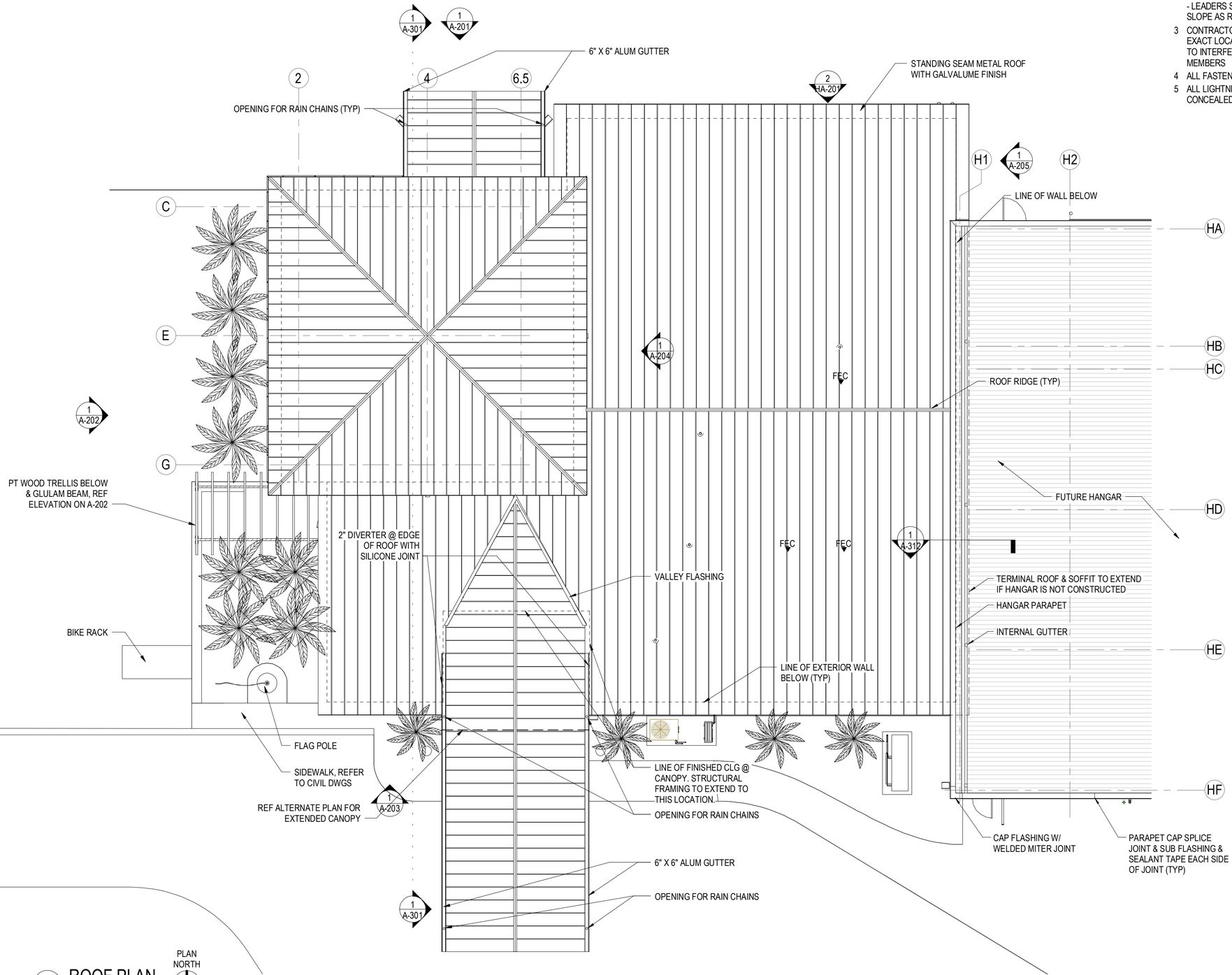

1 ROOF PLAN
SCALE: 1/8" = 1'-0"

PLAN NORTH
N

0 4' - 0" 8' - 0" 16' - 0"
SCALE: 1/8" = 1' - 0"

FOR PERMIT & BIDDING ONLY

AVCON
TRANSFORMING TODAY'S IDEAS INTO TOMORROW'S REALITY

WILLIAM A. HAYWARD JR.
FL LICENSE NO.:AR0011007

NO.	DATE	REVISION	BY

ROOF PLAN

100% DESIGN DRAWINGS

AIRPORT TERMINAL AND HANGAR DEVELOPMENT

PREPARED FOR
DEFUNIAK SPRINGS MUNICIPAL AIRPORT

DESIGNED BY:	CH
DRAWN BY:	MW
CHECKED BY:	DT
APPROVED BY:	WAH
PROJECT NO:	176232
DATE:	11/1/2021

SHEET NUMBER
A-130

THIS DOCUMENT CONTAINS PRIVILEGED AND PROPRIETARY INFORMATION, ALL OF WHICH IS EXPRESSLY PROVIDED BY AVCON, INC., FOR USE BY THE INTENDED RECIPIENT, AND FOR A SPECIFIC PURPOSE, WITHOUT THE EXPRESS WRITTEN CONSENT OF AVCON, INC. ANY DISTRIBUTION, REPRODUCTION, OR OTHER USE OF THIS DOCUMENT, IN WHOLE OR IN PART, IS STRICTLY PROHIBITED.

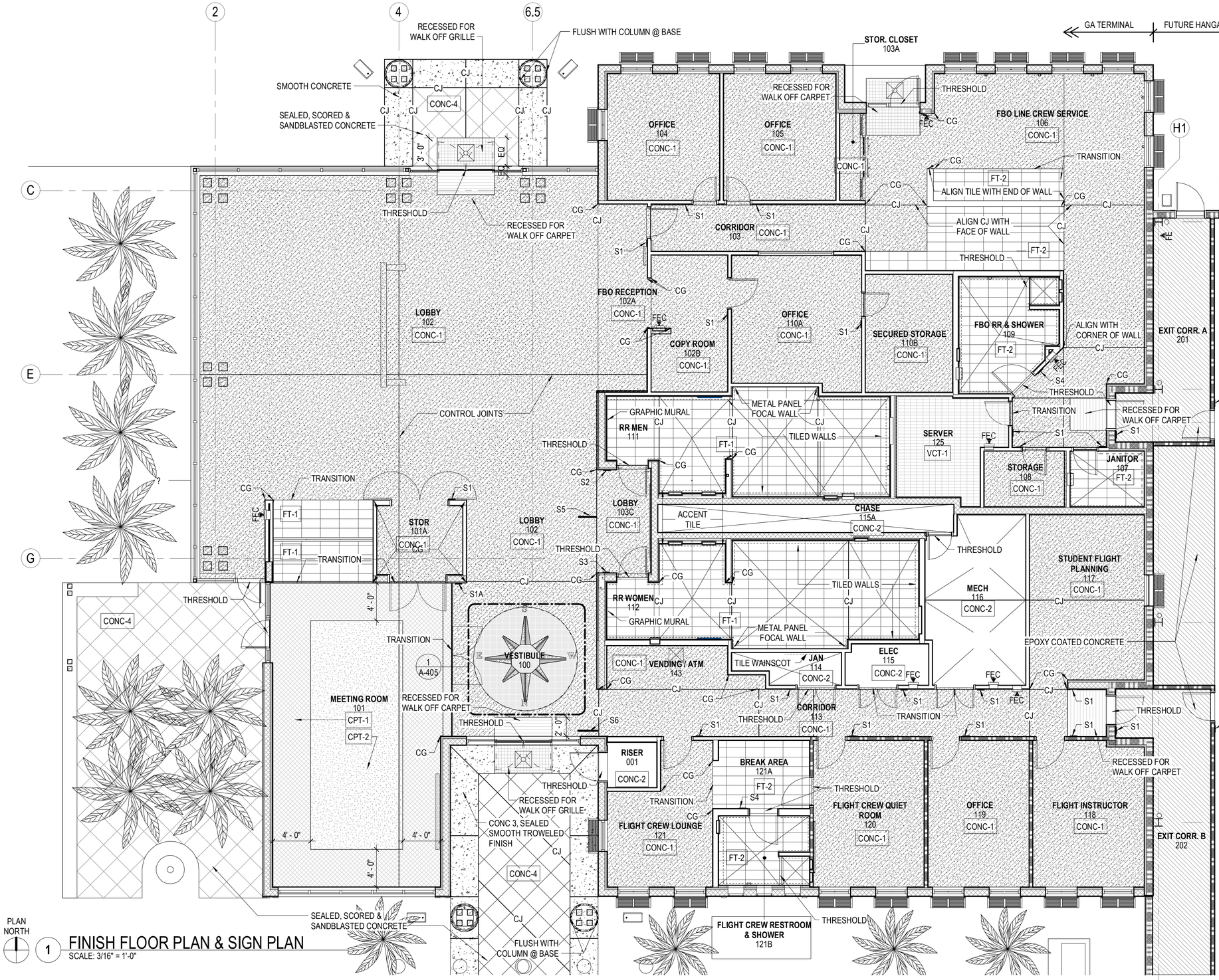

1 FINISH FLOOR PLAN & SIGN PLAN
SCALE: 3/16" = 1'-0"

FINISH LEGEND

- POLISHED CONCRETE (CONC-1)
- SEALED CONCRETE (CONC-2)
- SEALED SMOOTH TROWELED FINISH (CONC-3)
- SEALED, SCORED & SAND BLASTED CONCRETE (CONC-4)
- EPOXY COATED CONCRETE (FUTURE)
- CARPET TILE (CPT-1)
- CARPET TILE (CPT-2)
- TILE (REFER TO FINISH LEGEND)
- ANTI-STATIC VCT
- TERRAZZO
- WALK OFF MAT (FLUSH W/ FLOOR) GC TO COORDINATE PRIOR TO CONC. PLACEMENT
- WALK OFF GRILLE (FLUSH W/ FLOOR) GC TO COORDINATE PRIOR TO CONC. PLACEMENT
- FUTURE FINISH
- FUTURE WALLS SHOWN IN DASHED
- TILED WALLS
- S# SIGNAGE (REFER TO SIGN TYPES ON SHEET A-142)
- CJ CONTROL JOINT

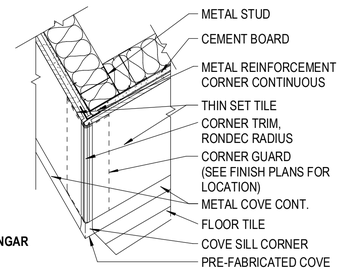

2 TILE CORNER AND BASE TRIM
SCALE: 1 1/2" = 1'-0"

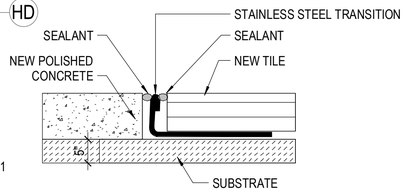

3 TILE TRANSITION DETAIL
SCALE: 3/4" = 1'-0"

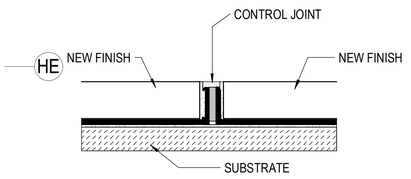

4 TILE FLOOR CONTROL JOINT
SCALE: 3/4" = 1'-0"

FOR PERMIT & BIDDING ONLY

AVCON
TRANSFORMING TODAY'S IDEAS INTO TOMORROW'S REALITY

WILLIAM A. HAYWARD JR.
FL LICENSE NO.:AR0011007

NO.	DATE	REVISION	BY
		um No. 1	

FINISH FLOOR PLAN & SIGN PLAN

100% DESIGN DRAWINGS

AIRPORT TERMINAL AND HANGAR DEVELOPMENT

PREPARED FOR

DEFUNIAK SPRINGS MUNICIPAL AIRPORT

DESIGNED BY:	CH
DRAWN BY:	JP
CHECKED BY:	DT
APPROVED BY:	WAH
PROJECT NO:	176232
DATE:	11/1/2021

SHEET NUMBER

A-140

THIS DOCUMENT CONTAINS PRIVILEGED AND PROPRIETARY INFORMATION, ALL OF WHICH IS EXPRESSLY PROVIDED BY AVCON, INC., FOR USE BY THE INTENDED RECIPIENT, AND FOR A SPECIFIC PURPOSE. WITHOUT THE EXPRESS WRITTEN CONSENT OF AVCON, INC. ANY DISTRIBUTION, REPRODUCTION, OR OTHER USE OF THIS DOCUMENT, IN WHOLE OR IN PART, IS STRICTLY PROHIBITED.

FINISH SCHEDULE

ROOM NUMBER	ROOM NAME	BASE FINISH	FLOORS FINISH	WALLS FINISH	CEILINGS FINISH	COMMENTS	ROOM ID TYPE
001	RISER	NONE	CONC-2	P-1	GWB MR	-	-
100	VESTIBULE	RB-1	CONC-1	P-1	GWB/ P-4/ P-5	SKY BLUE AT COVE W/ TERRAZZO INSERT & WALK-OFF MATS	-
101	MEETING ROOM	RB-1	CPT-1/CPT-2	P-1/TEMP GLASS	GWB/ P-4/ ACT-2	SR	S1
101A	STOR	RB-2	CONC-1	P-1	GWB/ P-4	SR	-
102	LOBBY	RB-1	CONC-1/CPT-3	P-1	ACT-3	SR	-
102A	FBO RECEPTION	RB-1	CONC-1	P-1	GWB/ P-4	SR	-
102B	COPY ROOM	RB-1	CONC-1	P-1	ACT-1	SR	-
103	CORRIDOR	RB-1	CONC-1/CPT-3/FT-2	P-1	GWB/ P-4	SR	-
103A	STOR. CLOSET	NONE	CONC-1	P-2	GWB MR/ P-4	SR	-
103C	LOBBY	RB-1	CONC-1	P-1	GWB/ P-4	SR, STONE ACCENT WALL ST-1, REF PLAN	-
104	OFFICE	RB-2	CONC-1	P-1	ACT-1	SR	S1
105	OFFICE	RB-2	CONC-1	P-1	ACT-1	SR	S1
106	FBO LINE CREW SERVICE	RB-2	CONC-1	P-1	ACT-1	-	-
107	JANITOR	WT-2	FT-2 / THICKSET	P-1	ACT-1	WAINSCOT AT SERVICE SINK	S1
108	STORAGE	RB-2	CONC-1	P-1	ACT-1	-	-
109	FBO RR & SHOWER	WT-2	FT-2 / THICKSET	WT-2	GWB MR/ P-4	SR	S4
110A	OFFICE	RB-2	CONC-1	P-1	ACT-1	SR	S1
110B	SECURED STORAGE	RB-2	CONC-1	P-1	ACT-1	SR	S1
111	RR MEN	WT-1	FT-1 / THICKSET	WT-1	GWB MR/ P-4	SR, CEILINGS AND COVE TO BE LEVEL 5 FINISH, ACCENT TILE AT SINK	S2
112	RR WOMEN	WT-1	FT-1 / THICKSET	WT-1	GWB MR/ P-4	SR, CEILINGS AND COVE TO BE LEVEL 5 FINISH, ACCENT TILE AT SINK	S3
113	CORRIDOR	RB-1	CONC-1/CPT-3	P-1	GWB	SR	-
114	JAN	RB-2	CONC-2	P-1	ACT-1	WAINSCOT AT SERVICE SINK	S1
115	ELEC	RB-2	CONC-2	P-1	ACT-1	-	S1
115A	CHASE	NONE	CONC-2	P-1	EXP TO STRUCTURE	-	S1
116	MECH	RB-2	CONC-2	P-1	EXP TO STRUCTURE	-	S1
117	STUDENT FLIGHT PLANNING	RB-1	CONC-1	P-1	ACT-1	SR	S1
118	FLIGHT INSTRUCTOR	RB-1	CONC-1	P-1	ACT-1	SR	S1
119	OFFICE	RB-1	CONC-1	P-1	ACT-1	SR	S1
120	FLIGHT CREW QUIET ROOM	RB-1	CONC-1	P-1	ACT-1	SR, AREA CARPET	S1
121	FLIGHT CREW LOUNGE	RB-1	CONC-1	P-1/P-3	ACT-1	SR	S1
121A	BREAK AREA	RB-1	FT-2 / THICKSET	P-1	ACT-1	SR	-
121B	FLIGHT CREW RESTROOM & SHOWER	WT-2	FT-2 / THICKSET	WT-2	GWB MR/ P-4	SR	S4
125	SERVER	RB-2	VCT-1	P-1	ACT-1	-	S1
143	VENDING / ATM	RB-1	CONC-1	P-1	GWB/ P-4	-	-
200	FUTURE HANGAR	FUTURE FIN	FUTURE FIN	FUTURE FIN	FUTURE FIN	FUTURE; ALT	-
201	EXIT CORR. A	RB-2	EPOXY PAINT	FUTURE FIN	FUTURE FIN	FUTURE; ALT	-
202	EXIT CORR. B	RB-2	EPOXY PAINT	FUTURE FIN	FUTURE FIN	FUTURE; ALT	-

FINISH SCHEDULE LEGEND- INTERIOR MATERIAL & COLOR BASIS OF DESIGN

FINISH	DESCRIPTION	MANUFACTURER	STYLE	COLOR	COMMENTS
ACT-1	ACOUSTICAL CEILING TILE	ARMSTRONG	CERAMAGUARD 605	WHITE	JANITORS CLOSETS; MOISTURE RESISTANT
ACT-2	ACOUSTICAL CEILING TILE	ARMSTRONG	CIRRUS	WHITE	OFFICES, STORAGE & ELECTRICAL
AMC-1	ACOUSTICAL METAL CEILING	ARMSTRONG	METALWORKS - LINEAR CLASSICS	WOOD GRAIN	WOOD GRAIN LINEAR CEILING - MEETING ROOM
AMC-2	LINEAR METAL ACOUSTICAL CEILING	VERSA-DEK	2.0 LS ES ACOUSTICAL	MANUFACTURER'S STANDARD WHITE	FIELD-PAINT W/ KYNAR COATING IF FACTORY FINISH IS UNAVAILABLE. SOUND INSULATION INSERTS & FASTENERS ARE TO BE PAINTED TO MATCH CEILING. FASTENERS ARE TO BE CONCEALED IN THE DECK REVEALS. EXTERIOR CANOPIES SHALL RECEIVE SIMILAR TREATMENT BUT ARE TO BE NON-PERFORATED.
AWT	ACCENT WALL TILE	TILE BAR	RENZO PORCELAIN TILE	AVORIA	12 X 24 - MATTE FINISH, BEHIND RESTROOM MIRRORS
CG	CORNER GUARD	C/S ACROVYN	SHADOWGRAIN TEXTURE	STAINLESS STEEL	2 X 2, SSTL
CONC-1	POLISHED CONCRETE	REFER TO SPEC			LOBBY, HALLWAYS & OFFICES (BLACK WHITE AND BLUE GLASS & BLACK BEAUTY AGGRAGATES)
CONC-2	SEALED CONCRETE	REFER TO SPEC		CLEAR SEALER	LIGHT BROOM FINISH
CONC-3	EXTERIOR CONCRETE	REFER TO SPEC			SEALED, SMOOTH, TROWELED FINISH
CONC-4	COQUINA CONCRETE	REFER TO SPEC			EXTERIOR CONCRETE. SEALED, SAW CUT & SAND BLASTED.
CPT-1	CARPET	MILLIKEN	MORAINE - EXPLORER	EXR 123-19 STRATUM	PERIMETER CARPET OF CONFERENCE ROOM
CPT-2	CARPET	MILLIKEN	MORAINE - NAVIGATOR	NAV123-19 STRATUM	CENTER ACCENT OF CONFERENCE ROOM
CPT-3	WALK OFF CARPET	AMERICAN FLOOR MATS	3/4" RECESSED GRILLE	BLUE	RECESSED -3/4"
CT-1	QUARTZ SURFACES	CAESARSTONE	ENGINEERED STONE SLAB	NOUGAT	PUBLIC BATHROOM COUNTERTOP - MITERED EDGE
CT-2	QUARTZ SURFACES	CAESARSTONE	ENGINEERED STONE SLAB	LONDON GREY	FBO KITCHEN, FLIGHT CREW BREAK AREA & OFFICES, & SOLID SURFACE WINDOW SILLS & LOCKER BENCH - BULLNOSE EDGE
CT-3	GRANITE TOP	MYSTIC GRANITE & MARBLE	GRANITE - POLISHED	BLUE IN THE NIGHT	RECEPTION COUNTER AND FLIGHT PLANNING DESK AT LOBBY. BULLNOSE EDGE PROFILE.
FT-1	CERAMIC FLOOR TILE	EMSER TILE	SANDSTORM	MOJAVE	PUBLIC BATHROOM FLOOR TILE
FT-2	CERAMIC FLOOR TILE	GARDEN STATE TILE	VENEZIANO	WHITE BASE MATTE	PRIVATE RESTROOMS - FBO RESTROOM & FLIGHT CREW RESTROOM
FW	FOCAL WALL	MOZ METALS	GRADIENT	AURORA	PUBLIC BATHROOM FOCAL WALLS
MD-1	LINEAR METAL DECK CEILING	VERSA-DEK	2.0 LS ES	WHITE	CANOPIES - NON-PERFORATED & NON-ACOUSTICAL
MRP-1	METAL ROOF PANELS	ATAS INTERNATIONAL	1 1/2" FIELD LOCK	DOVE GRAY	STANDING SEAM
P-1	WALL PAINT	SHERWIN WILLIAMS	INTERIOR EGGSHELL	SW 7004 - SNOWBOUND	WALL PAINT
P-2	DOOR FRAME PAINT	SHERWIN WILLIAMS	INTERIOR SEMI-GLOSS	SW 7019 - GAUNTLET GRAY	DOOR FRAMES BOTH INTERIOR & EXTERIOR. EXTERIOR TRIM PAINT
P-3	HOLLOW METAL DOOR	SHERWIN WILLIAMS	INTERIOR SEMI-GLOSS	SW 7004 - SNOWBOUND	DOOR PAINT
P-4	CEILING PAINT	SHERWIN WILLIAMS	INTERIOR EGGSHELL	SW 7007 - CLG BRIGHT WHITE	CEILING PAINT
P-5	CEILING PAINT	SHERWIN WILLIAMS	INTERIOR EGGSHELL	SW 6506 - VAST SKY	CEILING PAINT @ STEPP UP CEILING IN ROOM VESTIBULE 100
P-6	STUCCO PAINT	SHERWIN WILLIAMS	ACRYLIC EXTERIOR	SW 8917 - SHELL WHITE	STUCCO PAINT COLOR
P-7	SIDING PAINT	SHERWIN WILLIAMS	ACRYLIC EXTERIOR	SW 7655 - STAMPED CONCRETE	SIDING PAINT COLOR
RB-1	RUBBER BASE	ROPPE	SIMPLICITY - PV 4000	DARK GRAY	FLAT RUBBER BASE
RB-2	RUBBER BASE	ROPPE	PINNACLE	DARK GRAY	COVE RUBBER BASE - BACK OF HOUSE
RS	WINDOW TREATMENT - ROLLER SHADES	HUNTER DOUGLAS	TRANSLUCENT		ALL FIXED GLASS WINDOWS EXCEPT CLERESTORY AND STOREFRONT
ST-1	WOOD DOOR STAIN	TRUSTILE	WHITE OAK	GREY MIST	WOOD DOOR STAIN TO MATCH BEAMS & MILLWORK
ST-2	WOOD STAIN	MINWAX	PENETRATING	TO MATCH WOOD DOOR STAIN	GLULAM BEAMS (FRT WOOD)
TRZ-1	TERRAZZO FLOORING	TERRAZZO & MARBLE SUPPLY CO.	POLISHED	GREY CHIP, GREY RESIN	FLOOR COMPASS REFER TO DRAWING A-405/01
TRZ-2	TERRAZZO FLOORING	TERRAZZO & MARBLE SUPPLY CO.	POLISHED	WHITE CHIP, WHITE RESIN	FLOOR COMPASS REFER TO DRAWING A-405/01
TRZ-3	TERRAZZO FLOORING	TERRAZZO & MARBLE SUPPLY CO.	POLISHED	BLUE CHIP, BLUE RESIN	FLOOR COMPASS REFER TO DRAWING A-405/01
VCT-1	ANTI STATIC VINYL FLOOR TILE	ARMSTRONG	ANTI STATIC	FOSSIL GRAY	SERVER ROOM
WT-1	CERAMIC TILE	GARDEN STATE TILE	RE-COLOR	ALMOND GLOSS	12 X 24, GLOSS RECTIFIED - PUBLIC RESTROOM WALL TILE
WT-2	CERAMIC TILE	GARDEN STATE TILE	RE-COLOR	ECRU GLOSS	12 X 24, GLOSS RECTIFIED - PRIVATE RESTROOM & SHOWER WALL TILE

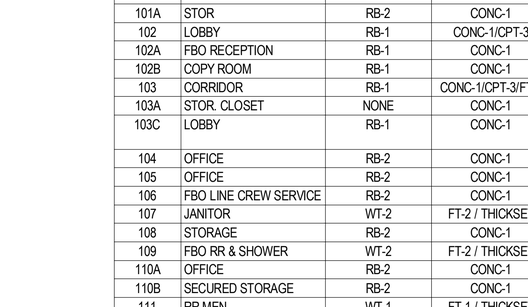

S1A S1 ROOM ID
SCALE: 3" = 1'-0"

NOTE:
1. LAYERED ROOM SIGNS S1A.
2. S1A ROOM ID W/ INTERCHANGEABLE MESSAGE.
3. REF TO EXT. ELEV. FOR ADDT'L SIGNAGE

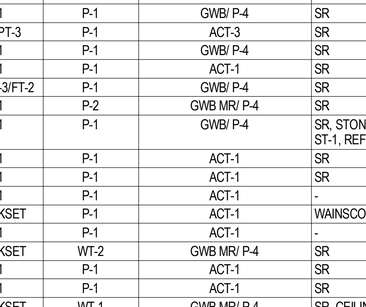

S2 RESTROOM - MEN - ADA
SCALE: 3" = 1'-0"

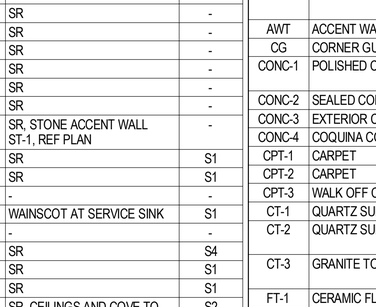

S3 RESTROOM - WOMEN - ADA
SCALE: 3" = 1'-0"



S4 RESTROOM - UNISEX - SIGN
SCALE: 3" = 1'-0"

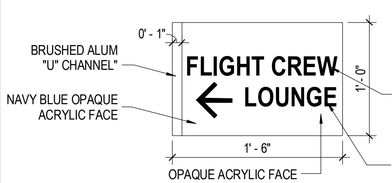

S5 WAYFINDING SIGN
SCALE: 1 1/2" = 1'-0"

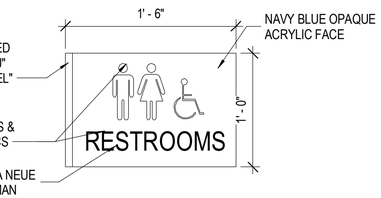

S6 WALL MOUNTED RESTROOM SIGN
SCALE: 1 1/2" = 1'-0"

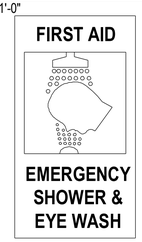

NOTE: SIGNAGE PROVIDED BY SHOWER/EYE WASH MANUFACTURER

S7 EYE WASH
SCALE: 3" = 1'-0"

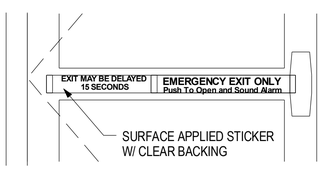

S8 15 SECOND DELAY
SCALE: 1/2" = 1'-0"

NOTES - FINISH PLANS

1. INTERIOR FINISH / MATERIALS SHALL BE INSTALLED ACCORDING TO MANUFACTURER'S RECOMMENDATIONS.
2. ALL FUTURE UNFINISHED SPACES SHALL BE COMPLETED UNDER A SEPARATE PROJECT.
3. REFERENCE SPECIFICATIONS FOR ADDITIONAL INFORMATION, REQUIREMENTS & MOCK UPS.
4. REFERENCE REFLECTED CEILING PLAN FOR LIGHT COVES ADDITIONAL NOTES, FINISHES & CEILING HEIGHTS.
5. SR = SOUND RATED WALLS AND CEILING
6. MOISTURE CONTENT BE FIELD VERIFIED PRIOR TO FINISH FLOOR INSTALLATION; PREP FLOOR AS PER MFG RECOMMENDATIONS.
7. ALL FLOOR TRANSITIONS TO BE FLUSH & THRESHOLDS TO BE ADA COMPLIANT.
8. ALL GWB CLG'S, SOFFITS & COVES TO BE LEVEL 5 FINISH.
9. REFERENCE FINISH PLAN FOR SIGNAGE LOCATIONS
10. FINISHES IN THE SPECIFICATIONS OR IN THE FINISH SCHEDULE LEGEND ABOVE SHALL SERVE AS BASIS OF DESIGN.

SIGN NOTES:
1. REF SHEET A-002 FOR MOUNTING HEIGHTS.
2. ALL BRAILLE LETTERING TO BE CERTIFIED VALIDATING CORRECT MESSAGE.
3. REF ELEVATIONS FOR EXTERIOR SIGNAGE.
4. REF CANOPY SECTION FOR CLEARANCE SIGNAGE.

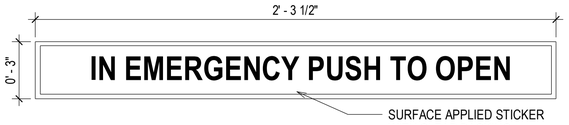

S9 IN EMERGENCY PUSH TO OPEN
SCALE: 3" = 1'-0"

FOR PERMIT & BIDDING ONLY

AVCON
TRANSFORMING TODAY'S IDEAS INTO TOMORROW'S REALITY

WILLIAM A. HAYWARD JR.
FL LICENSE NO.:AR0011007

NO.	DATE	REVISION	BY
		um No. 1	

FINISH SCHEDULE & SIGNAGE SCHEDULE

100% DESIGN DRAWINGS

AIRPORT TERMINAL AND HANGAR DEVELOPMENT

PREPARED FOR
DEFUNIAK SPRINGS MUNICIPAL AIRPORT

DESIGNED BY:	CH
DRAWN BY:	JP
CHECKED BY:	DT
APPROVED BY:	WAH
PROJECT NO:	176232
DATE:	11/1/2021

SHEET NUMBER
A-142

THIS DOCUMENT CONTAINS PRIVILEGED AND PROPRIETARY INFORMATION, ALL OF WHICH IS EXPRESSLY PROVIDED BY AVCON, INC., FOR USE BY THE INTENDED RECIPIENT, AND FOR A SPECIFIC PURPOSE. WITHOUT THE EXPRESS WRITTEN CONSENT OF AVCON, INC. ANY DISTRIBUTION, REPRODUCTION, OR OTHER USE OF THIS DOCUMENT, IN WHOLE OR IN PART, IS STRICTLY PROHIBITED.

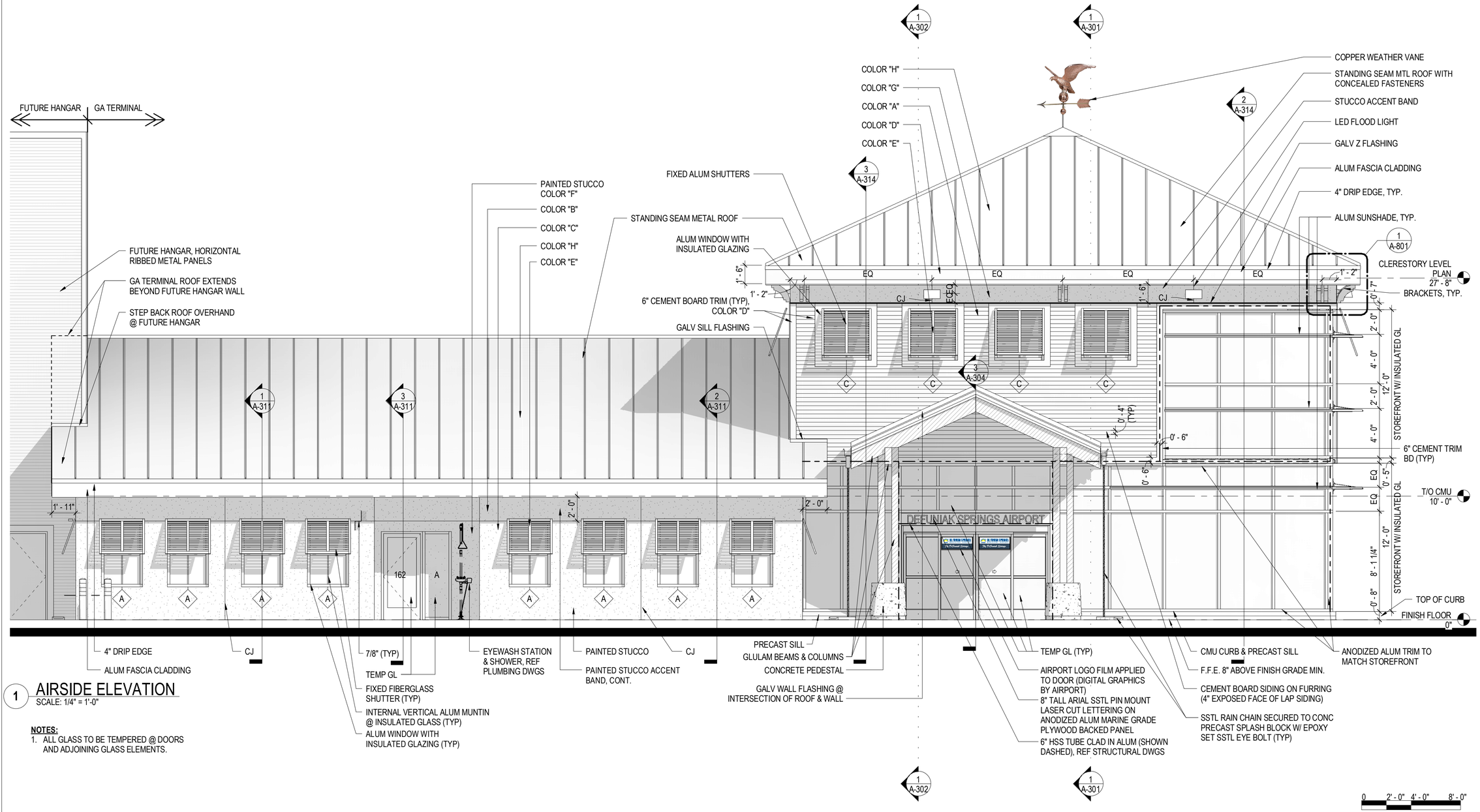

1 AIRSIDE ELEVATION
SCALE: 1/4" = 1'-0"

NOTES:
1. ALL GLASS TO BE TEMPERED @ DOORS AND ADJOINING GLASS ELEMENTS.

FOR PERMIT & BIDDING ONLY

AVCON
TRANSFORMING TODAY'S IDEAS INTO TOMORROW'S REALITY

WILLIAM A. HAYWARD JR.
FL LICENSE NO.:AR0011007

NO.	DATE	REVISION	BY
um No. 1			

ELEVATION

100% DESIGN DRAWINGS

AIRPORT TERMINAL AND HANGAR DEVELOPMENT

PREPARED FOR
DEFUNIAK SPRINGS MUNICIPAL AIRPORT

DESIGNED BY:	CH
DRAWN BY:	MW
CHECKED BY:	DT
APPROVED BY:	WAH
PROJECT NO:	176232
DATE:	11/1/2021

SHEET NUMBER
A-201

THIS DOCUMENT CONTAINS PRIVILEGED AND PROPRIETARY INFORMATION, ALL OF WHICH IS EXPRESSLY PROVIDED BY AVCON, INC., FOR USE BY THE INTENDED RECIPIENT, AND FOR A SPECIFIC PURPOSE, WITHOUT THE EXPRESS WRITTEN CONSENT OF AVCON, INC. ANY DISTRIBUTION, REPRODUCTION, OR OTHER USE OF THIS DOCUMENT, IN WHOLE OR IN PART, IS STRICTLY PROHIBITED.

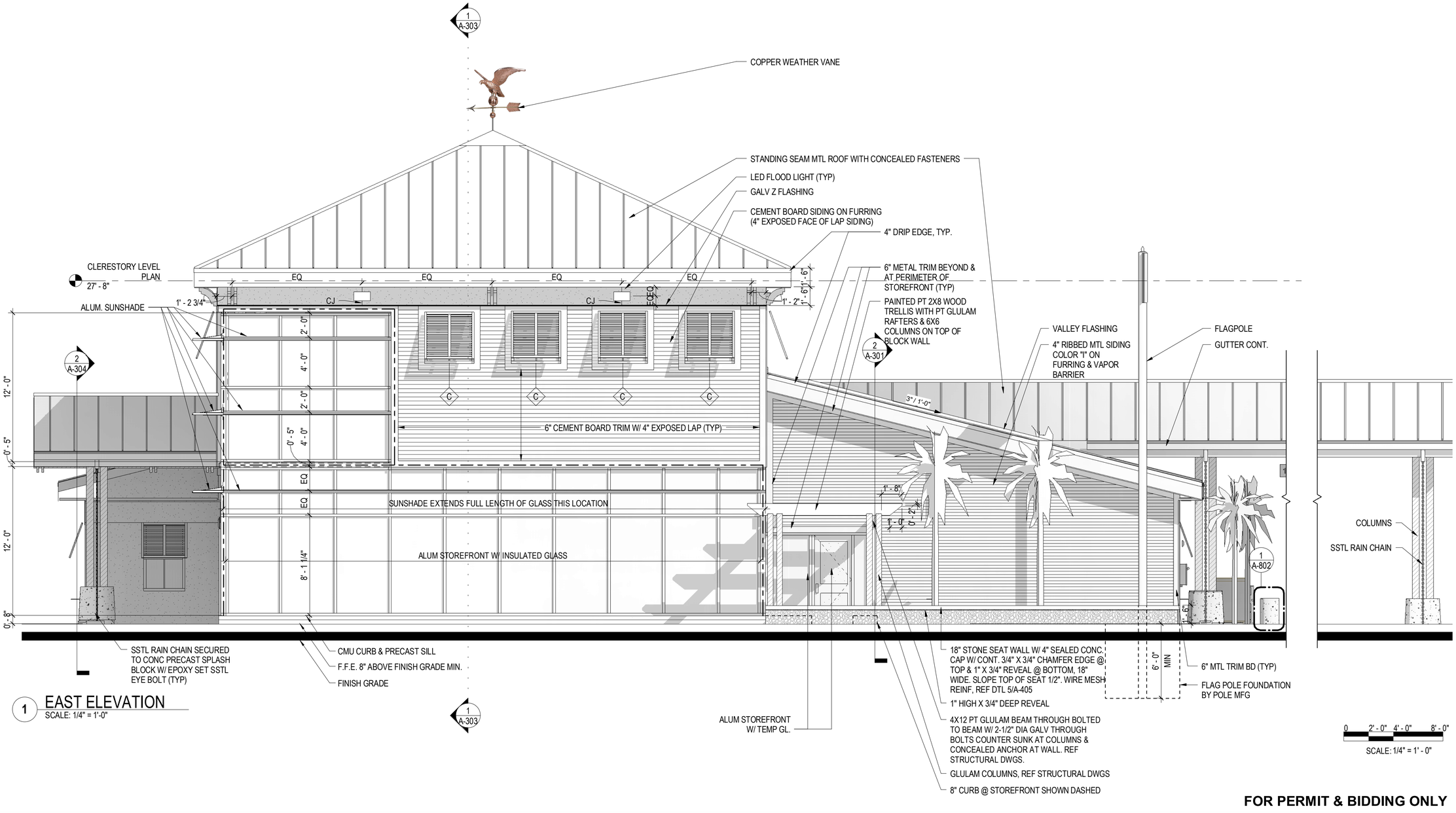

1 EAST ELEVATION
SCALE: 1/4" = 1'-0"

FOR PERMIT & BIDDING ONLY

AVCON
TRANSFORMING TODAY'S IDEAS INTO TOMORROW'S REALITY

WILLIAM A. HAYWARD JR.
FL LICENSE NO.:AR0011007

NO.	DATE	REVISION	BY

ELEVATION

100% DESIGN DRAWINGS

AIRPORT TERMINAL AND HANGAR DEVELOPMENT

PREPARED FOR
DEFUNIAK SPRINGS MUNICIPAL AIRPORT

DESIGNED BY:	CH
DRAWN BY:	MW
CHECKED BY:	DT
APPROVED BY:	WAH
PROJECT NO:	176232
DATE:	11/1/2021

SHEET NUMBER
A-202

THIS DOCUMENT CONTAINS PRIVILEGED AND PROPRIETARY INFORMATION, ALL OF WHICH IS EXPRESSLY PROVIDED BY AVCON, INC., FOR USE BY THE INTENDED RECIPIENT, AND FOR A SPECIFIC PURPOSE, WITHOUT THE EXPRESS WRITTEN CONSENT OF AVCON, INC. ANY DISTRIBUTION, REPRODUCTION, OR OTHER USE OF THIS DOCUMENT, IN WHOLE OR IN PART, IS STRICTLY PROHIBITED.

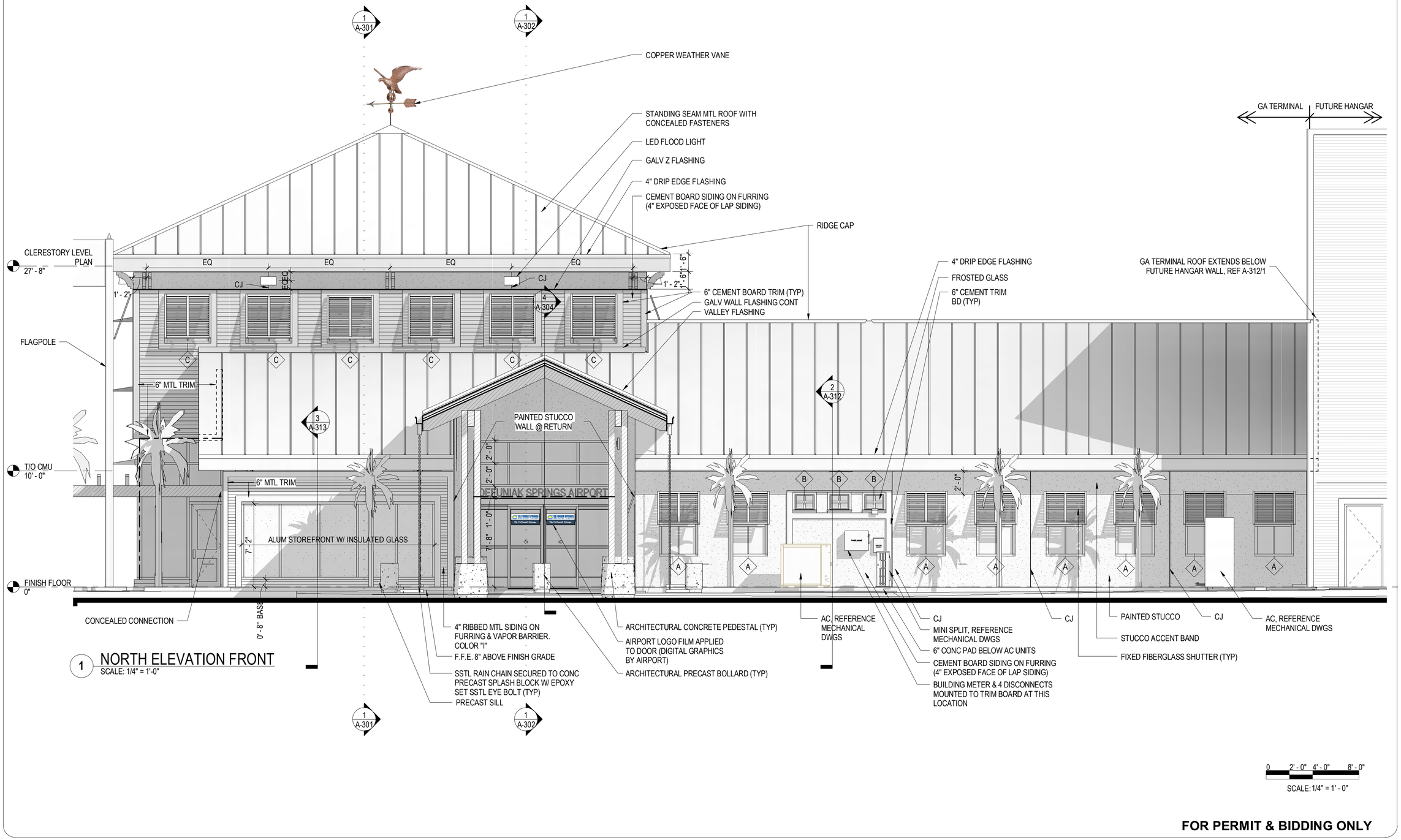

1 NORTH ELEVATION FRONT
SCALE: 1/4" = 1'-0"

0 2' - 0" 4' - 0" 8' - 0"
SCALE: 1/4" = 1' - 0"

FOR PERMIT & BIDDING ONLY

AVCON
TRANSFORMING TODAY'S IDEAS INTO TOMORROW'S REALITY

WILLIAM A. HAYWARD JR.
FL LICENSE NO.:AR0011007

NO.	DATE	REVISION	BY

ELEVATION

100% DESIGN DRAWINGS

AIRPORT TERMINAL AND HANGAR DEVELOPMENT

PREPARED FOR
DEFUNIAK SPRINGS MUNICIPAL AIRPORT

DESIGNED BY:	CH
DRAWN BY:	MW
CHECKED BY:	DT
APPROVED BY:	WAH
PROJECT NO:	176232
DATE:	11/1/2021

SHEET NUMBER
A-203

THIS DOCUMENT CONTAINS PRIVILEGED AND PROPRIETARY INFORMATION. ALL OF WHICH IS EXPRESSLY PROVIDED BY AVCON, INC., FOR USE BY THE INTENDED RECIPIENT, AND FOR A SPECIFIC PURPOSE. WITHOUT THE EXPRESS WRITTEN CONSENT OF AVCON, INC., ANY DISTRIBUTION, REPRODUCTION, OR OTHER USE OF THIS DOCUMENT, IN WHOLE OR IN PART, IS STRICTLY PROHIBITED.

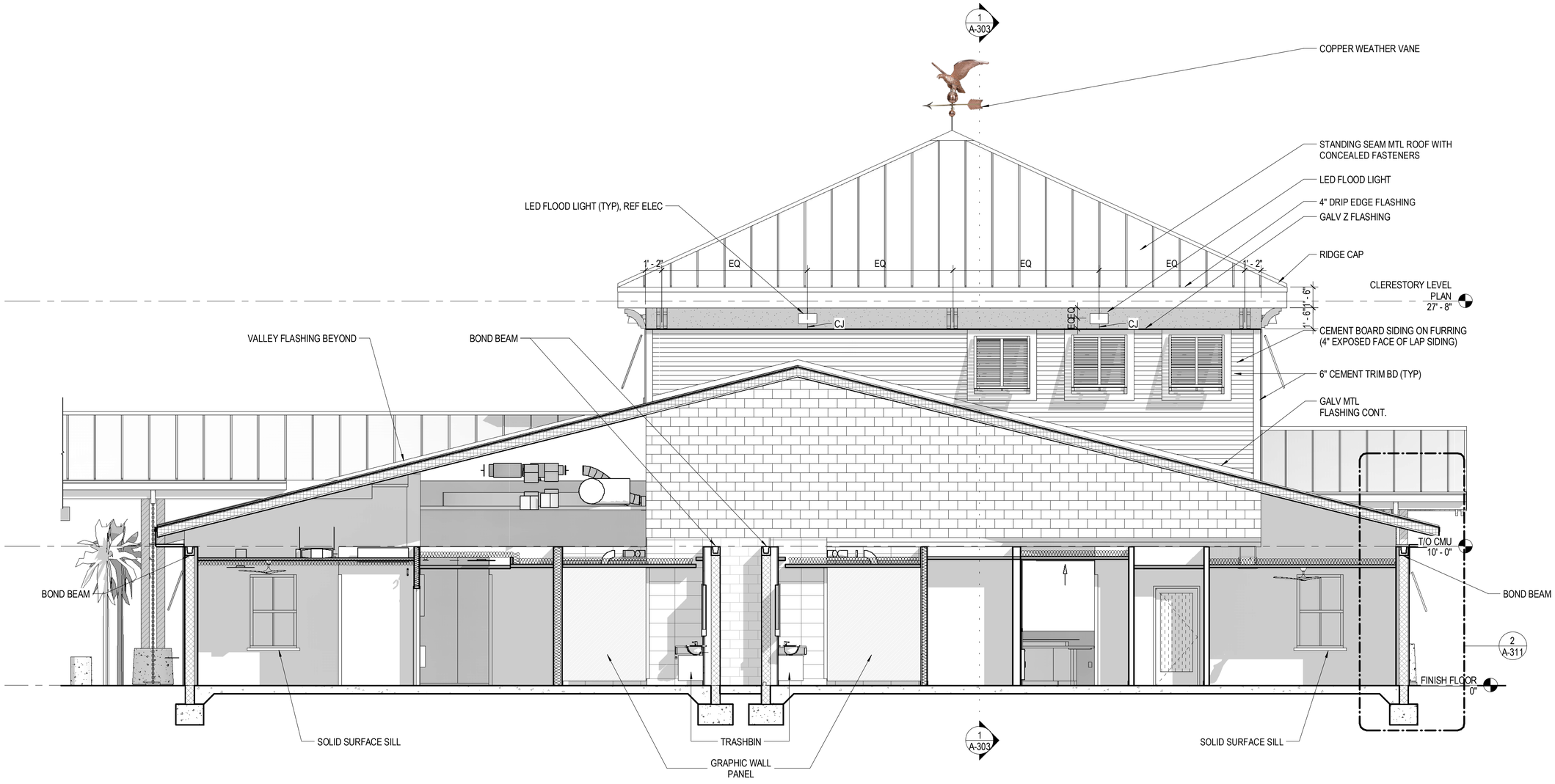

1 EAST ELEVATION @ CLERESTORY & BUILDING CROSS SECTION

SCALE: 1/4" = 1'-0"

FOR PERMIT & BIDDING ONLY

AVCON

TRANSFORMING TODAY'S IDEAS INTO TOMORROW'S REALITY

WILLIAM A. HAYWARD JR.
FL LICENSE NO.:AR0011007

NO.	DATE	REVISION	BY

ELEVATION

100% DESIGN DRAWINGS

AIRPORT TERMINAL AND HANGAR DEVELOPMENT

PREPARED FOR

DEFUNIAK SPRINGS MUNICIPAL AIRPORT

DESIGNED BY:	**Designer**
DRAWN BY:	**Author**
CHECKED BY:	**Checker**
APPROVED BY:	**WAH**
PROJECT NO:	**176232**
DATE:	**11/1/2021**

SHEET NUMBER

A-204

THIS DOCUMENT CONTAINS PRIVILEGED AND PROPRIETARY INFORMATION, ALL OF WHICH IS EXPRESSLY PROVIDED BY AVCON, INC., FOR USE BY THE INTENDED RECIPIENT, AND FOR A SPECIFIC PURPOSE. WITHOUT THE EXPRESS WRITTEN CONSENT OF AVCON, INC. ANY DISTRIBUTION, REPRODUCTION, OR OTHER USE OF THIS DOCUMENT, IN WHOLE OR IN PART, IS STRICTLY PROHIBITED.

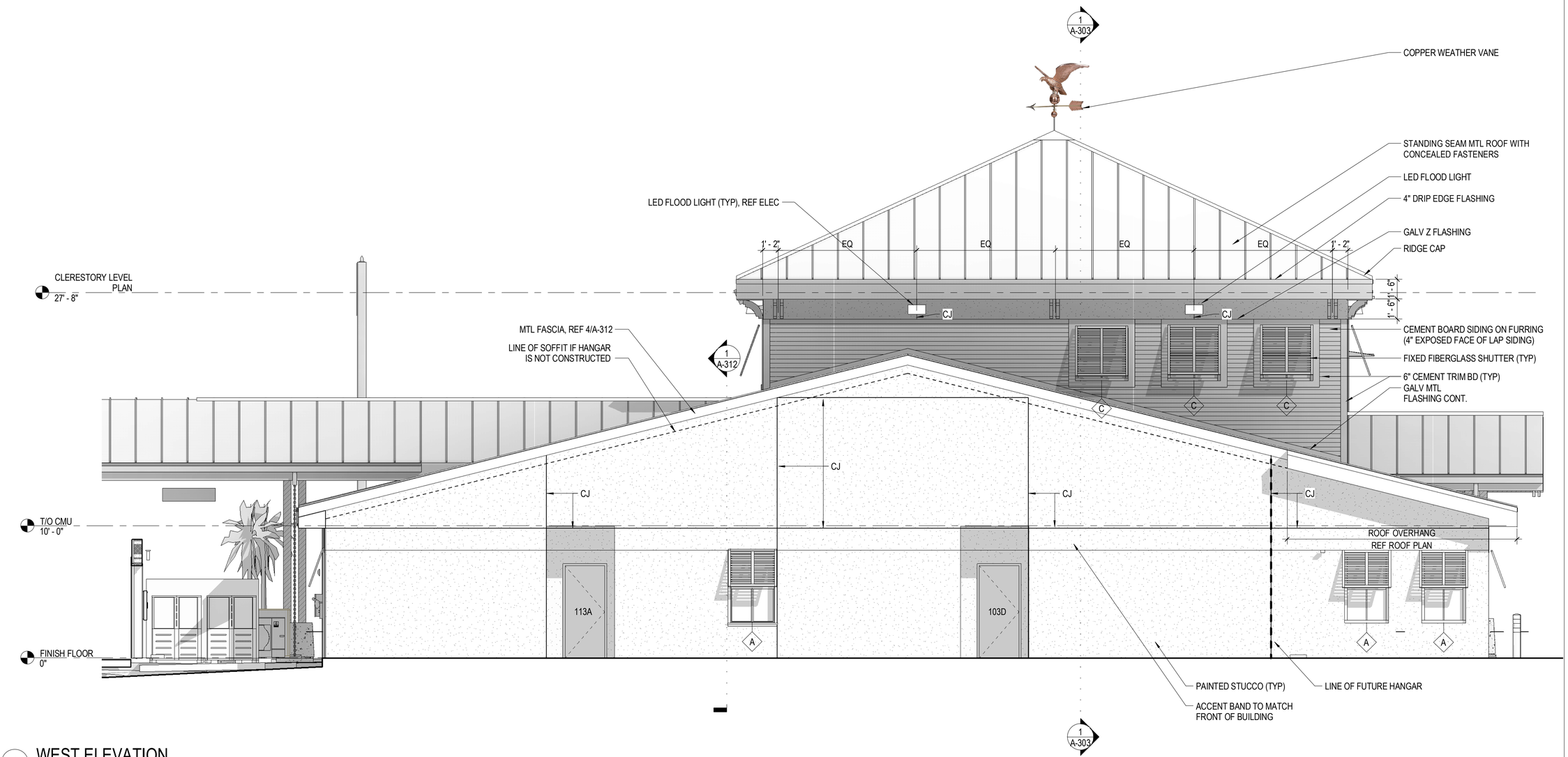

1 WEST ELEVATION
SCALE: 1/4" = 1'-0"

NOTE:
HANGAR ELEMENTS AND EXIT PASSAGEWAYS NOT SHOWN FOR CLARITY

FOR PERMIT & BIDDING ONLY

AVCON
TRANSFORMING TODAY'S IDEAS INTO TOMORROW'S REALITY

WILLIAM A. HAYWARD JR.
FL LICENSE NO.:AR0011007

NO.	DATE	REVISION	BY
		um No. 1	

ELEVATION

100% DESIGN DRAWINGS

AIRPORT TERMINAL AND HANGAR DEVELOPMENT

PREPARED FOR
DEFUNIAK SPRINGS MUNICIPAL AIRPORT

DESIGNED BY:	**Designer**
DRAWN BY:	**Author**
CHECKED BY:	**Checker**
APPROVED BY:	**WAH**
PROJECT NO:	**176232**
DATE:	**11/1/2021**

SHEET NUMBER

A-205

THIS DOCUMENT CONTAINS PRIVILEGED AND PROPRIETARY INFORMATION; ALL OF WHICH IS EXPRESSLY PROVIDED BY AVCON, INC., FOR USE BY THE INTENDED RECIPIENT, AND FOR A SPECIFIC PURPOSE, WITHOUT THE EXPRESS WRITTEN CONSENT OF AVCON, INC. ANY DISTRIBUTION, REPRODUCTION, OR OTHER USE OF THIS DOCUMENT, IN WHOLE OR IN PART, IS STRICTLY PROHIBITED.

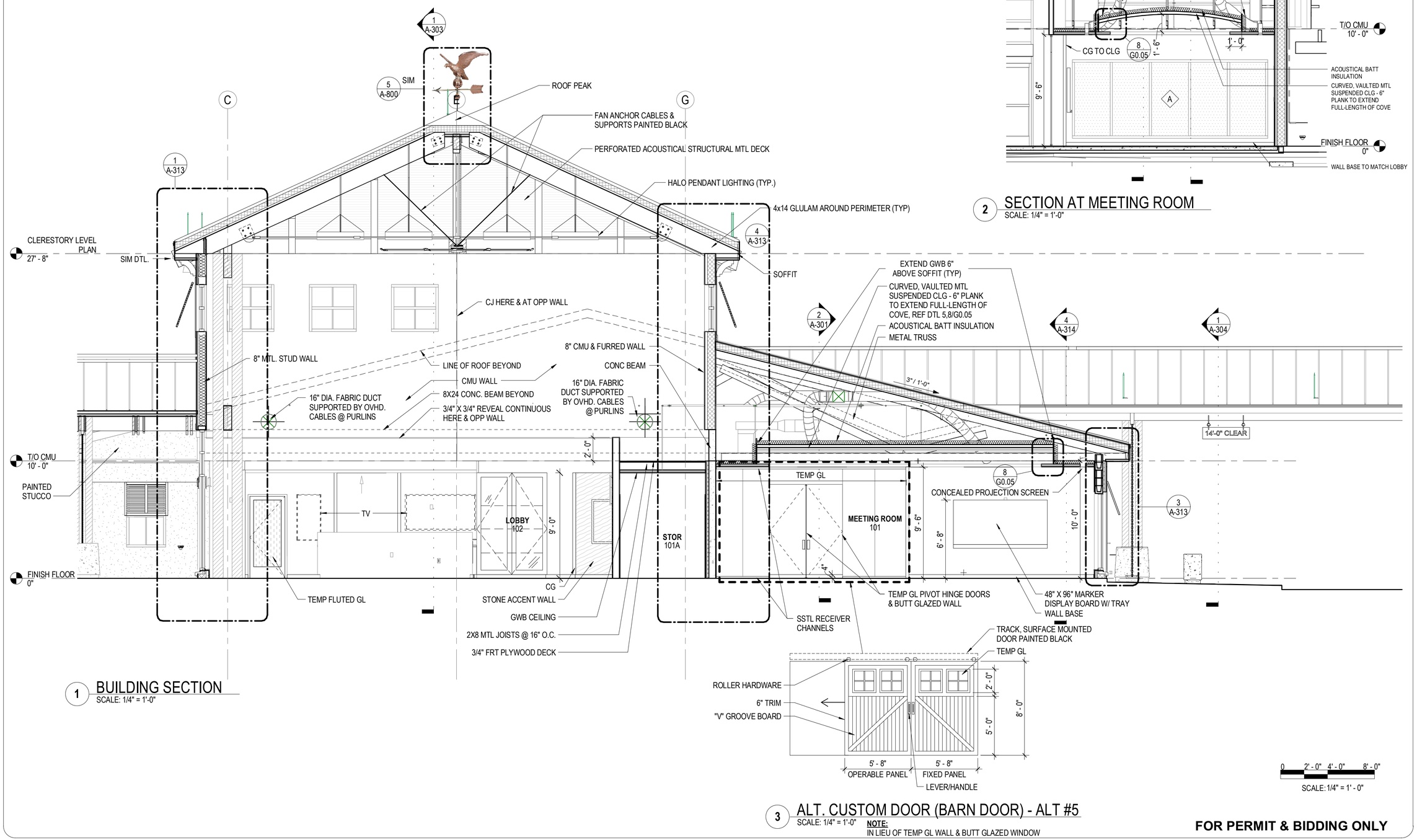

1 BUILDING SECTION
SCALE: 1/4" = 1'-0"

2 SECTION AT MEETING ROOM
SCALE: 1/4" = 1'-0"

3 ALT. CUSTOM DOOR (BARN DOOR) - ALT #5
SCALE: 1/4" = 1'-0"

NOTE:
IN LIEU OF TEMP GL WALL & BUTT GLAZED WINDOW

0 2' - 0" 4' - 0" 8' - 0"
SCALE: 1/4" = 1' - 0"

FOR PERMIT & BIDDING ONLY

AVCON
TRANSFORMING TODAYS IDEAS INTO TOMORROW'S REALITY

WILLIAM A. HAYWARD JR.
FL LICENSE NO.:AR0011007

NO.	DATE	REVISION	BY
		Jum No. 1	

BUILDING SECTIONS

100% DESIGN DRAWINGS

AIRPORT TERMINAL AND HANGAR DEVELOPMENT

PREPARED FOR
DEFUNIAK SPRINGS MUNICIPAL AIRPORT

DESIGNED BY:	CH
DRAWN BY:	MW
CHECKED BY:	DT
APPROVED BY:	WAH
PROJECT NO:	176232
DATE:	11/1/2021

SHEET NUMBER
A-301

THIS DOCUMENT CONTAINS PRIVILEGED AND PROPRIETARY INFORMATION, ALL OF WHICH IS EXPRESSLY PROVIDED BY AVCON, INC., FOR USE BY THE INTENDED RECIPIENT, AND FOR A SPECIFIC PURPOSE WITHOUT THE EXPRESS WRITTEN CONSENT OF AVCON, INC. ANY DISTRIBUTION, REPRODUCTION, OR OTHER USE OF THIS DOCUMENT, IN WHOLE OR IN PART, IS STRICTLY PROHIBITED.

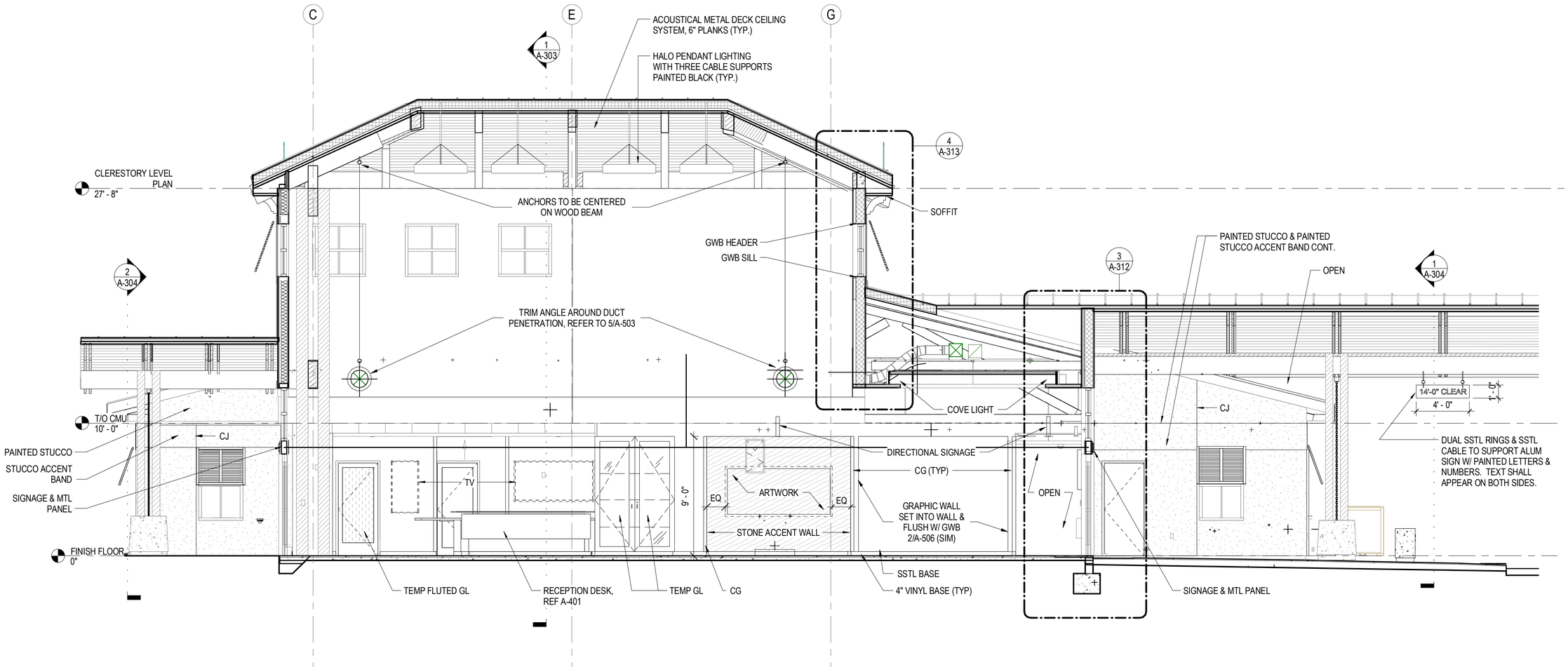

1 BUILDING SECTION THROUGH LOBBY
SCALE: 1/4" = 1'-0"

0 4' - 0" 8' - 0" 16' - 0"

SCALE: 1/8" = 1' - 0"

FOR PERMIT & BIDDING ONLY

AVCON

TRANSFORMING TODAY'S IDEAS INTO TOMORROW'S REALITY

WILLIAM A. HAYWARD JR.
FL LICENSE NO.:AR0011007

NO.	DATE	REVISION	BY

BUILDING SECTIONS

100% DESIGN DRAWINGS

AIRPORT TERMINAL AND HANGAR DEVELOPMENT

PREPARED FOR

DEFUNIAK SPRINGS MUNICIPAL AIRPORT

DESIGNED BY:	CH
DRAWN BY:	-
CHECKED BY:	DT
APPROVED BY:	WAH
PROJECT NO:	176232
DATE:	11/1/2021

SHEET NUMBER

A-302

THIS DOCUMENT CONTAINS PRIVILEGED AND PROPRIETARY INFORMATION, ALL OF WHICH IS EXPRESSLY PROVIDED BY AVCON, INC. FOR USE BY THE INTENDED RECIPIENT, AND FOR A SPECIFIC PURPOSE. WITHOUT THE EXPRESS WRITTEN CONSENT OF AVCON, INC., ANY DISTRIBUTION, REPRODUCTION, OR OTHER USE OF THIS DOCUMENT, IN WHOLE OR IN PART, IS STRICTLY PROHIBITED.

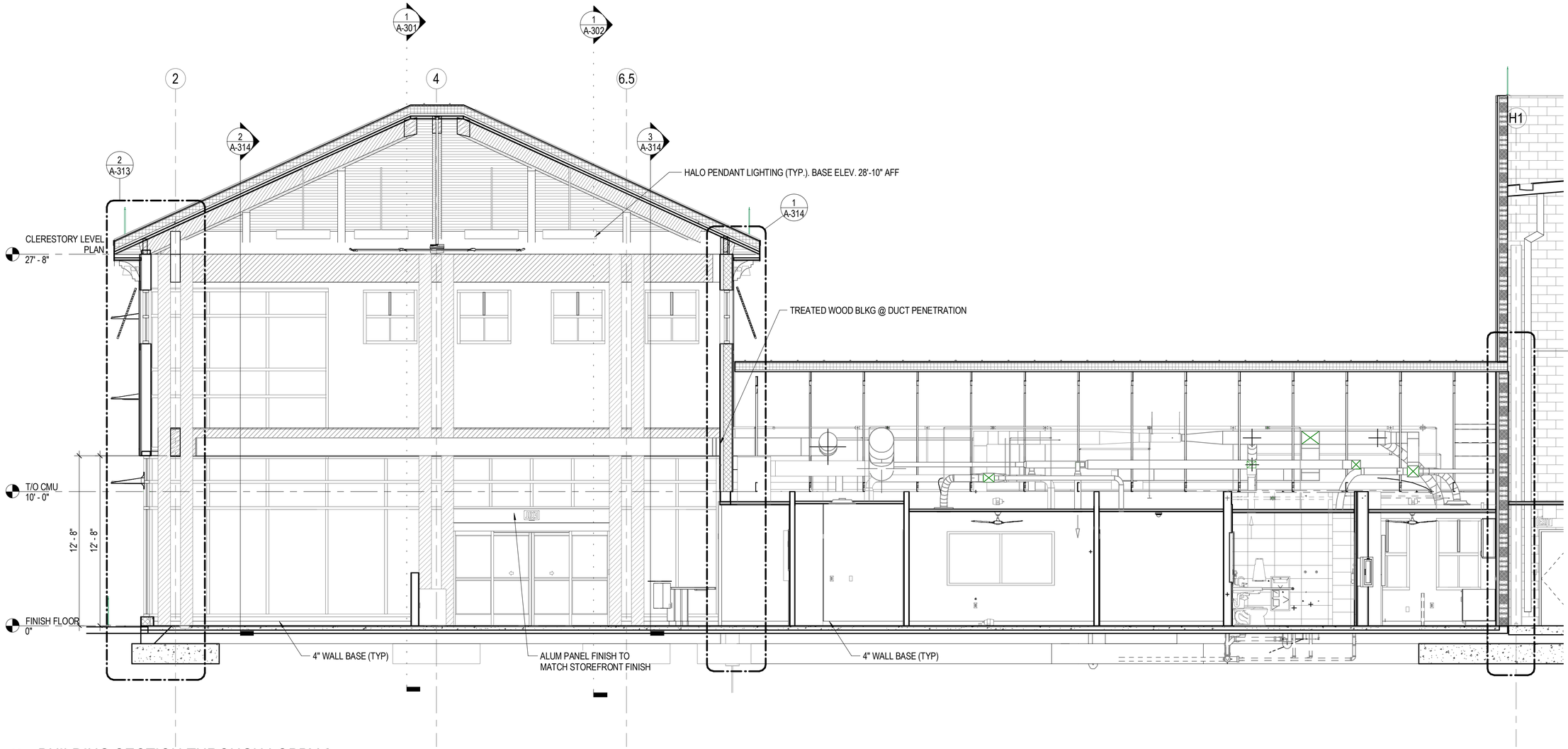

1 BUILDING SECTION THROUGH LOBBY 2
SCALE: 1/4" = 1'-0"

FOR PERMIT & BIDDING ONLY

AVCON
TRANSFORMING TODAY'S IDEAS INTO TOMORROW'S REALITY

WILLIAM A. HAYWARD JR.
FL LICENSE NO.:AR0011007

NO.	DATE	REVISION	BY

BUILDING SECTIONS

100% DESIGN DRAWINGS

AIRPORT TERMINAL AND HANGAR DEVELOPMENT

PREPARED FOR

DEFUNIAK SPRINGS MUNICIPAL AIRPORT

DESIGNED BY:	Designer
DRAWN BY:	Author
CHECKED BY:	Checker
APPROVED BY:	WAH
PROJECT NO:	176232
DATE:	11/1/2021

SHEET NUMBER

A-303

THIS DOCUMENT CONTAINS PRIVILEGED AND PROPRIETARY INFORMATION, ALL OF WHICH IS EXPRESSLY PROVIDED BY AVCON, INC., FOR USE BY THE INTENDED RECIPIENT, AND FOR A SPECIFIC PURPOSE. WITHOUT THE EXPRESS WRITTEN CONSENT OF AVCON, INC., ANY DISTRIBUTION, REPRODUCTION, OR OTHER USE OF THIS DOCUMENT, IN WHOLE OR IN PART, IS STRICTLY PROHIBITED.

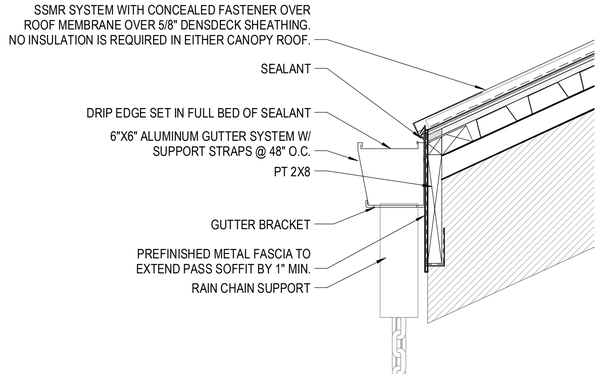

6 CANOPY GUTTER DETAIL, TYPICAL

SCALE: 1 1/2" = 1'-0"

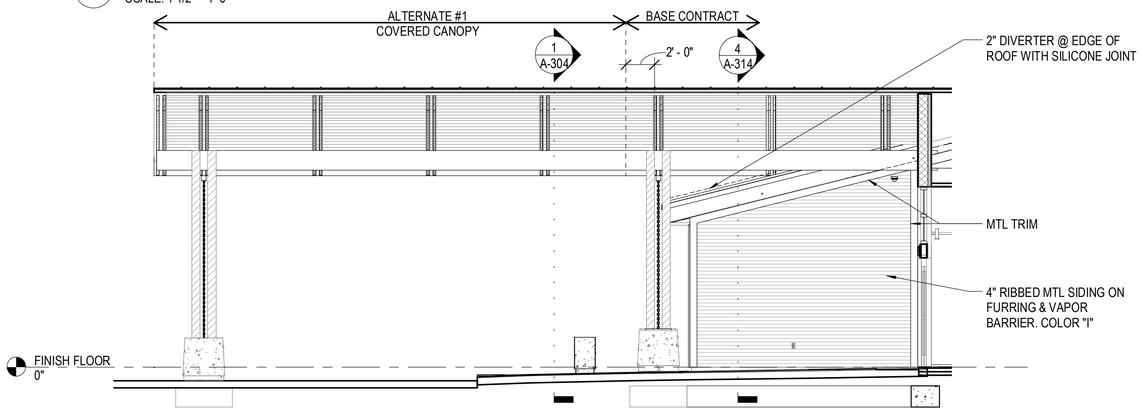

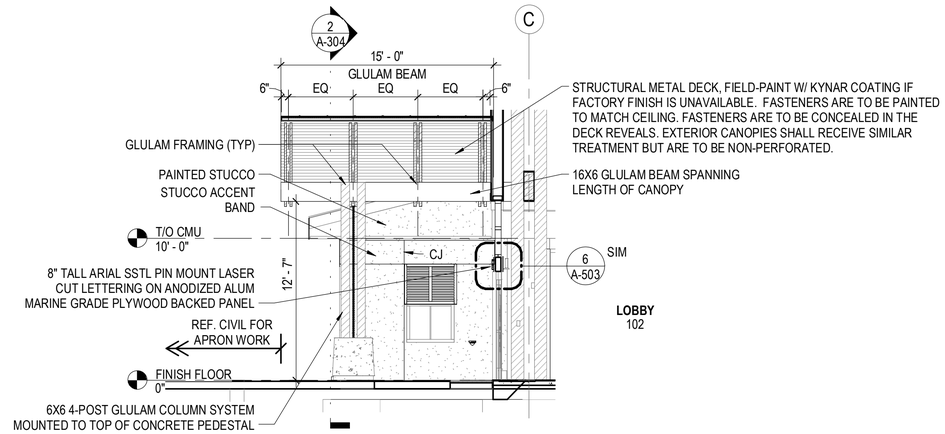

3 AIRSIDE ENTRY CANOPY SECTION

SCALE: 3/16" = 1'-0"

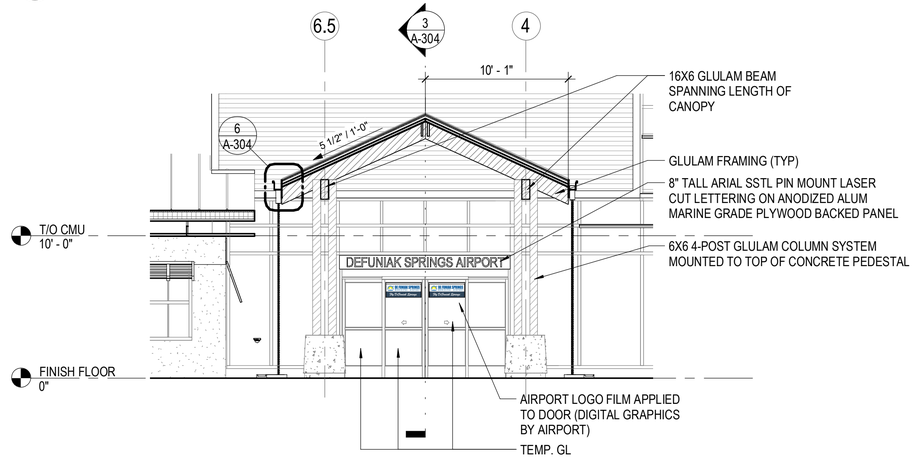

5 LANDSIDE ENTRY CANOPY SECTION - REVERSE

SCALE: 3/16" = 1'-0"

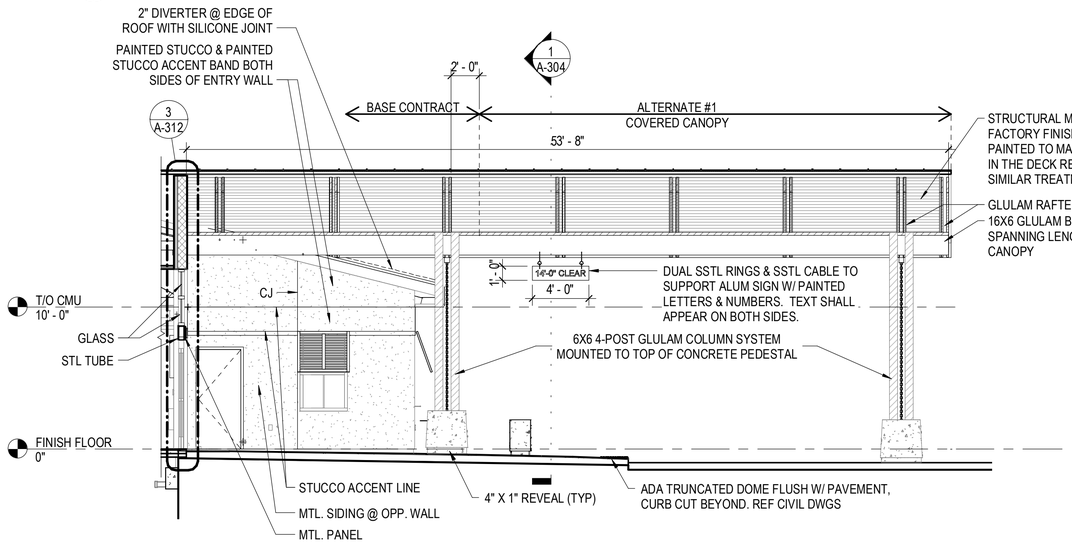

4 LANDSIDE ENTRY CANOPY SECTION

SCALE: 3/16" = 1'-0"

2 AIRSIDE ENTRY CANOPY CROSS SECTION

SCALE: 3/16" = 1'-0"

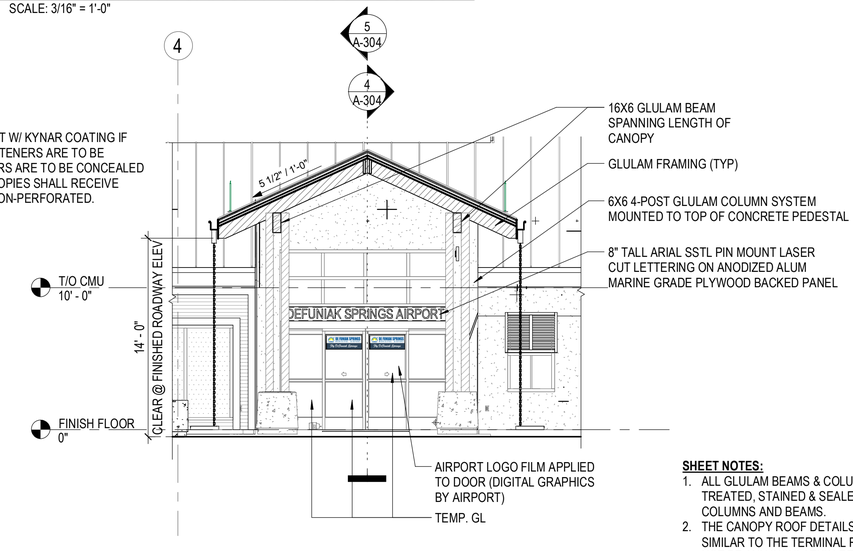

1 LANDSIDE ENTRY CANOPY CROSS SECTION

SCALE: 3/16" = 1'-0"

SHEET NOTES:

1. ALL GLULAM BEAMS & COLUMNS TO BE FIRE RETARDANT TREATED, STAINED & SEALED, INCLUDING THE ENDS OF THE COLUMNS AND BEAMS.
2. THE CANOPY ROOF DETAILS SHOWN ON THIS SHEET ARE SIMILAR TO THE TERMINAL ROOF, HOWEVER THERE WILL NOT BE ANY INSULATION REQUIRED. THE SUB-ROOF SHEATHING BOARD AND SUB-ROOF MEMBRANE SHOWN ON THESE DETAILS SHALL BE INSTALLED AT THE CANOPY ROOF.

FOR PERMIT & BIDDING ONLY

AVCON

TRANSFORMING TODAY'S IDEAS INTO TOMORROW'S REALITY

WILLIAM A. HAYWARD JR.
FL LICENSE NO.:AR0011007

NO.	DATE	REVISION	BY
2	11/8/21	ISSUED FOR REBID	WAH
1	5/14/21	Revisions per Addendum No. 1	WAH

CANOPY SECTIONS

100% DESIGN DRAWINGS

AIRPORT TERMINAL AND HANGAR DEVELOPMENT

PREPARED FOR

DEFUNIAK SPRINGS MUNICIPAL AIRPORT

DESIGNED BY:	Designer
DRAWN BY:	Author
CHECKED BY:	Checker
APPROVED BY:	WAH
PROJECT NO:	176232
DATE:	11/1/2021

SHEET NUMBER

A-304

THIS DOCUMENT CONTAINS PRIVILEGED AND PROPRIETARY INFORMATION, ALL OF WHICH IS EXPRESSLY PROVIDED BY AVCON, INC., FOR USE BY THE INTENDED RECIPIENT, AND FOR A SPECIFIC PURPOSE. WITHOUT THE EXPRESS WRITTEN CONSENT OF AVCON, INC. ANY DISTRIBUTION, REPRODUCTION, OR OTHER USE OF THIS DOCUMENT, IN WHOLE OR IN PART, IS STRICTLY PROHIBITED.

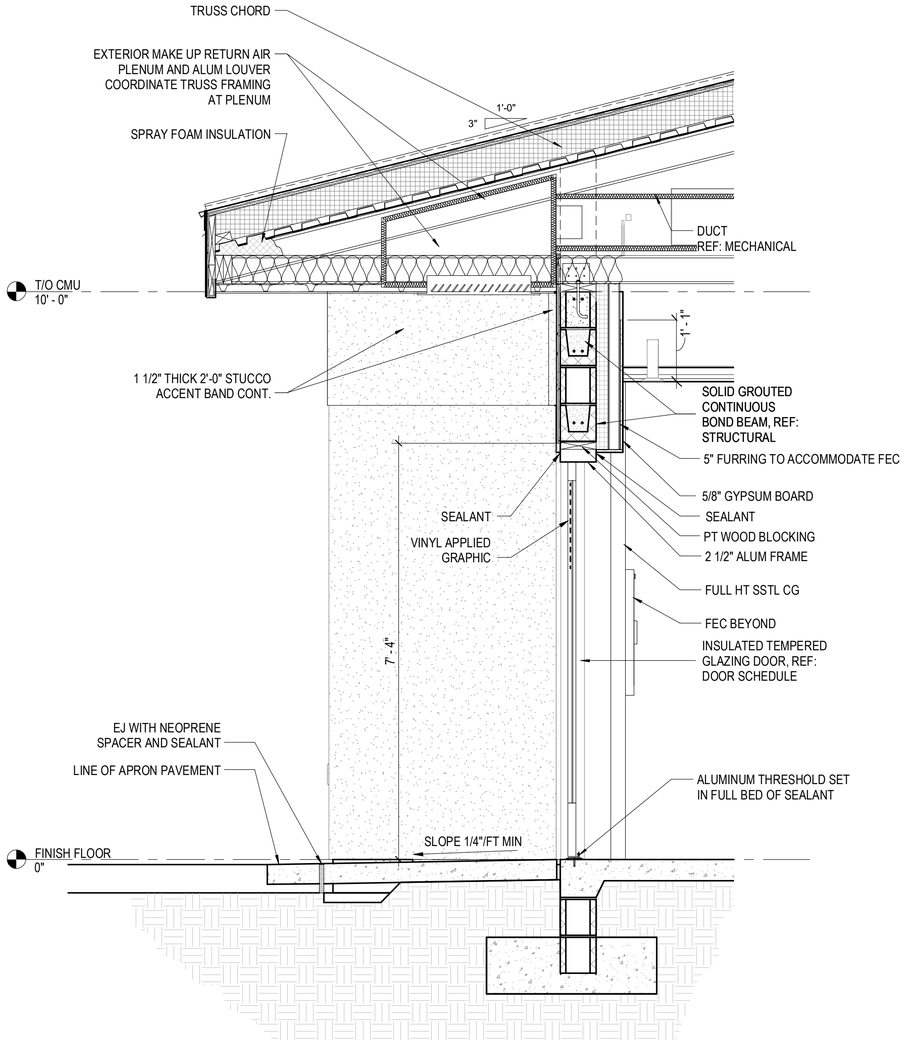

3 WALL SECTION 3
SCALE: 3/4" = 1'-0"

REFER TO DETAIL 1 THIS SHEET FOR ADDITIONAL NOTES AND DIMENSIONS

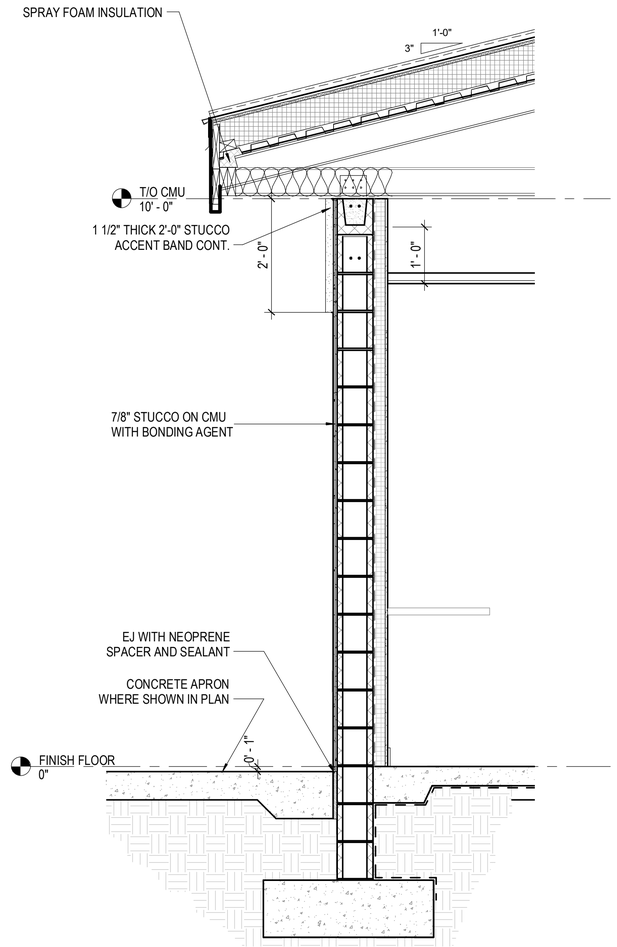

2 WALL SECTION 2
SCALE: 3/4" = 1'-0"

REFER TO DETAIL 1 THIS SHEET FOR ADDITIONAL NOTES AND DIMENSIONS

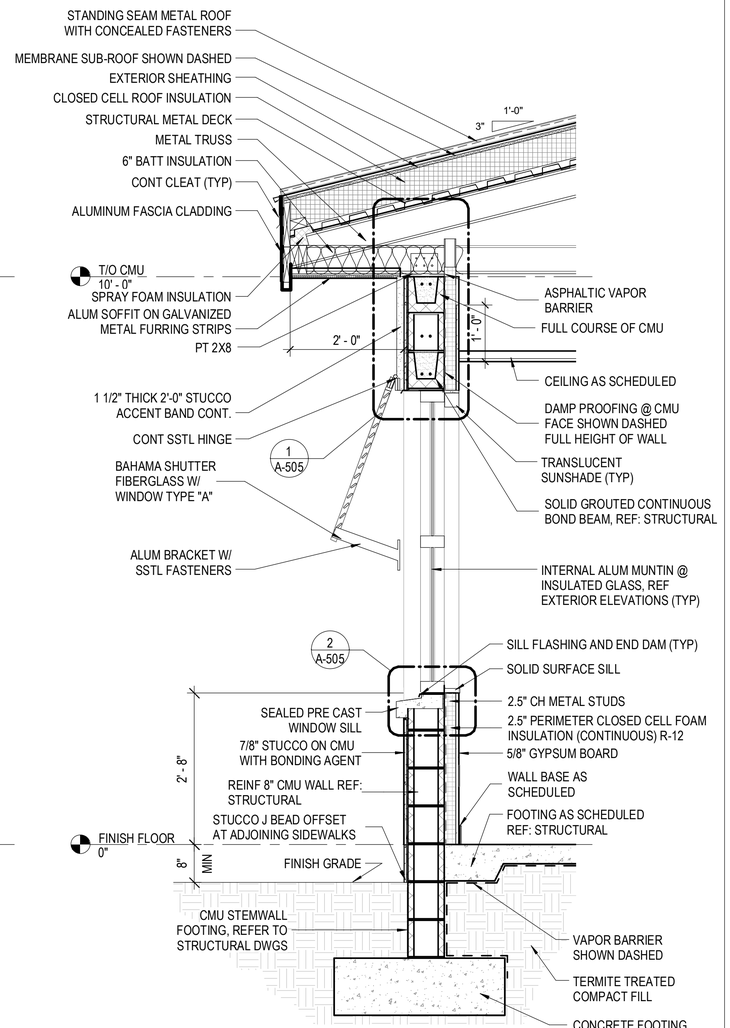

1 WALL SECTION 1
SCALE: 3/4" = 1'-0"

0 1' - 0" 2' - 0" 4' - 0"
SCALE: 3/4" = 1' - 0"

FOR PERMIT & BIDDING ONLY

AVCON
TRANSFORMING TODAY'S IDEAS INTO TOMORROW'S REALITY

WILLIAM A. HAYWARD JR.
FL LICENSE NO.:AR0011007

NO.	DATE	REVISION	BY

WALL SECTIONS

100% DESIGN DRAWINGS

AIRPORT TERMINAL AND HANGAR DEVELOPMENT

PREPARED FOR

DEFUNIAK SPRINGS MUNICIPAL AIRPORT

DESIGNED BY:	CH
DRAWN BY:	DN
CHECKED BY:	DT
APPROVED BY:	WAH
PROJECT NO:	176232
DATE:	11/1/2021

SHEET NUMBER

A-311

THIS DOCUMENT CONTAINS PRIVILEGED AND PROPRIETARY INFORMATION, ALL OF WHICH IS EXPRESSLY PROVIDED BY AVCON, INC. FOR USE BY THE INTENDED RECIPIENT, AND FOR A SPECIFIC PURPOSE. WITHOUT THE EXPRESS WRITTEN CONSENT OF AVCON, INC., ANY DISTRIBUTION, REPRODUCTION, OR OTHER USE OF THIS DOCUMENT, IN WHOLE OR IN PART, IS STRICTLY PROHIBITED.

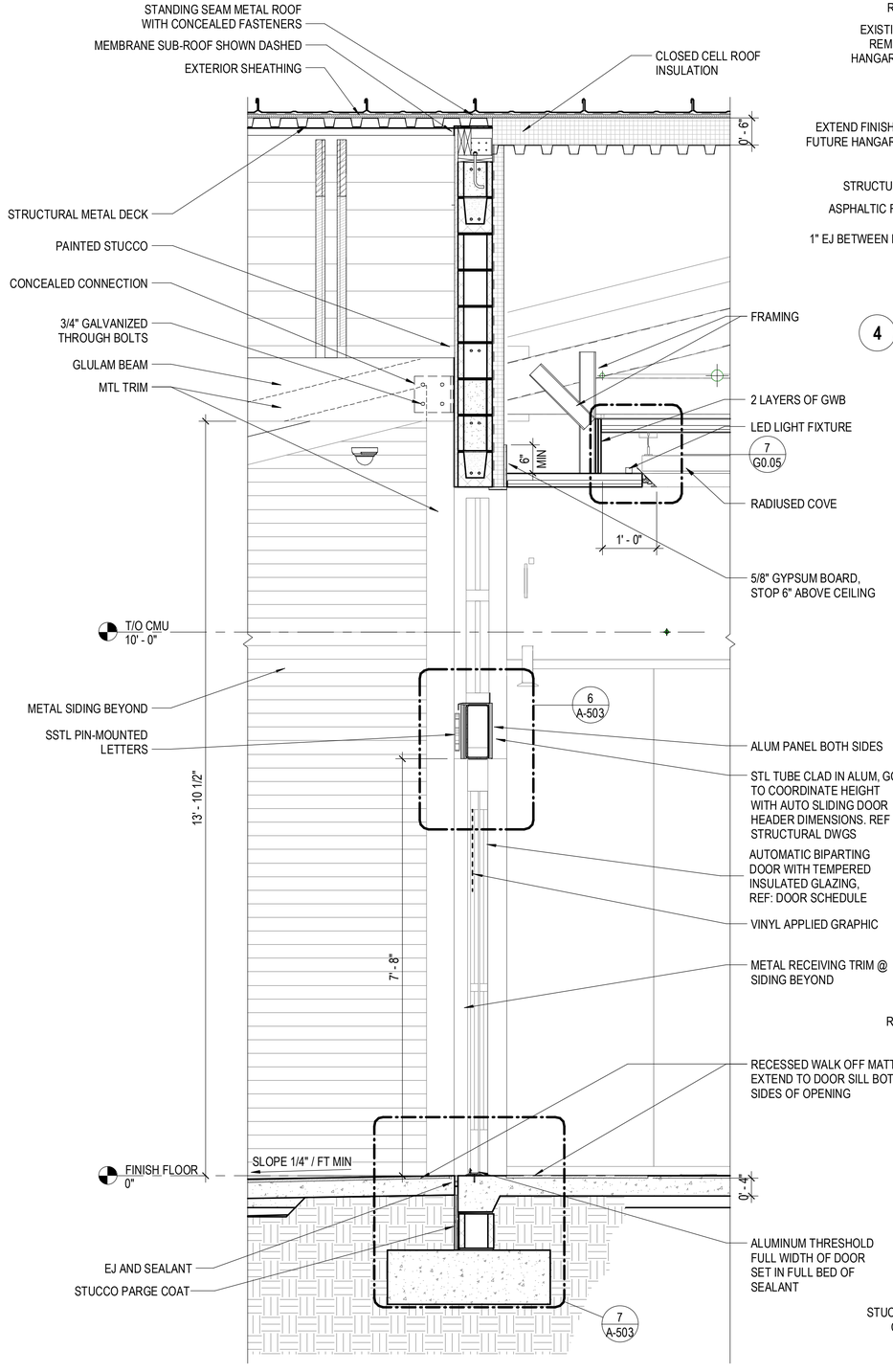

3 WALL SECTION 6
SCALE: 3/4" = 1'-0"

REFER TO DETAIL 1 THIS SHEET FOR ADDITIONAL NOTES AND DIMENSIONS

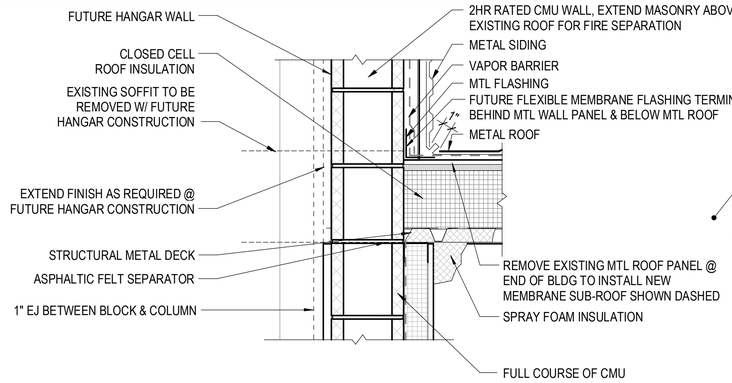

4 DETAIL AT ROOF TO FUTURE HANGAR TRANSITION
SCALE: 1 1/2" = 1'-0"

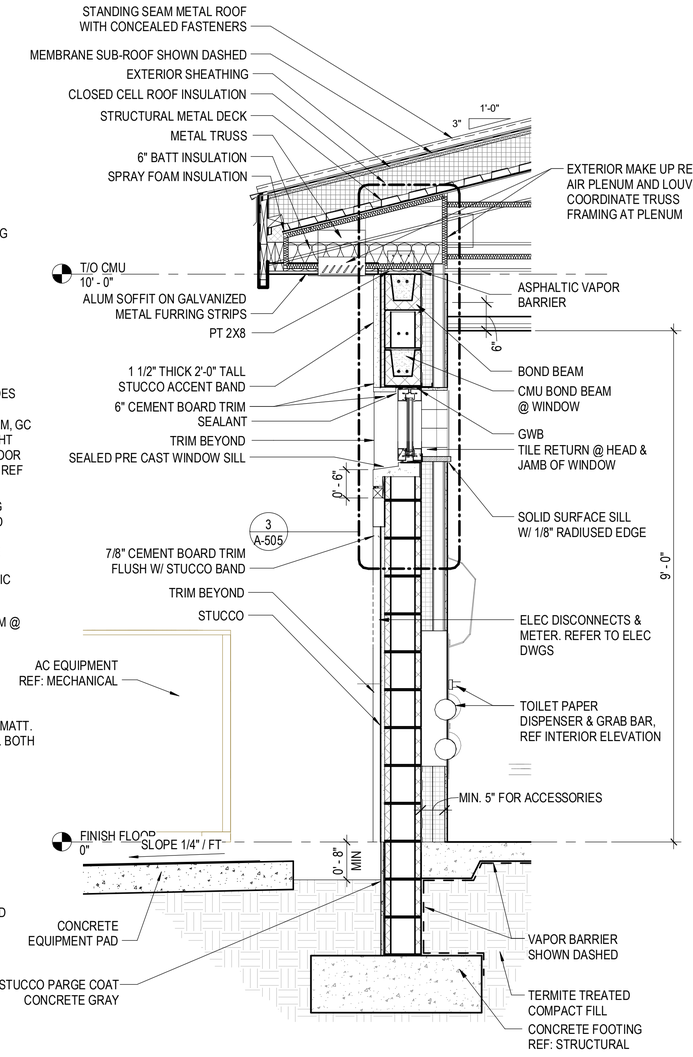

2 WALL SECTION 5
SCALE: 3/4" = 1'-0"

REFER TO DETAIL 1 THIS SHEET FOR ADDITIONAL NOTES AND DIMENSIONS

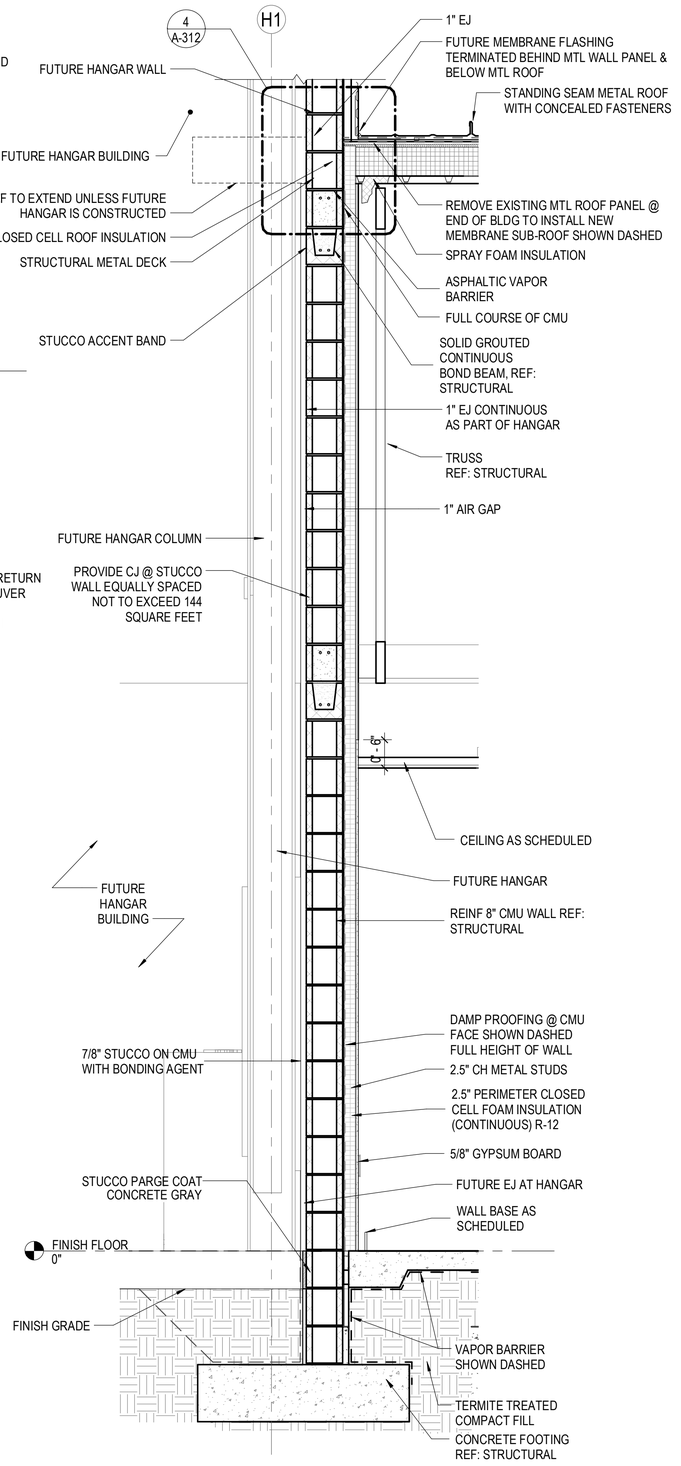

1 WALL SECTION 4
SCALE: 3/4" = 1'-0"

0 1' - 0" 2' - 0" 4' - 0"

SCALE: 3/4" = 1' - 0"

FOR PERMIT & BIDDING ONLY

AVCON
TRANSFORMING TODAY'S IDEAS INTO TOMORROW'S REALITY

WILLIAM A. HAYWARD JR.
FL LICENSE NO.:AR0011007

NO.	DATE	REVISION	BY
		um No. 1	

WALL SECTIONS

100% DESIGN DRAWINGS

AIRPORT TERMINAL AND HANGAR DEVELOPMENT

PREPARED FOR

DEFUNIAK SPRINGS MUNICIPAL AIRPORT

DESIGNED BY:	CH
DRAWN BY:	MW
CHECKED BY:	DT
APPROVED BY:	WAH
PROJECT NO:	176232
DATE:	11/1/2021

SHEET NUMBER

A-312

THIS DOCUMENT CONTAINS PRIVILEGED AND PROPRIETARY INFORMATION, ALL OF WHICH IS EXPRESSLY PROVIDED BY AVCON, INC., FOR USE BY THE INTENDED RECIPIENT, AND FOR A SPECIFIC PURPOSE, WITHOUT THE EXPRESS WRITTEN CONSENT OF AVCON, INC. ANY DISTRIBUTION, REPRODUCTION, OR OTHER USE OF THIS DOCUMENT, IN WHOLE OR IN PART, IS STRICTLY PROHIBITED.

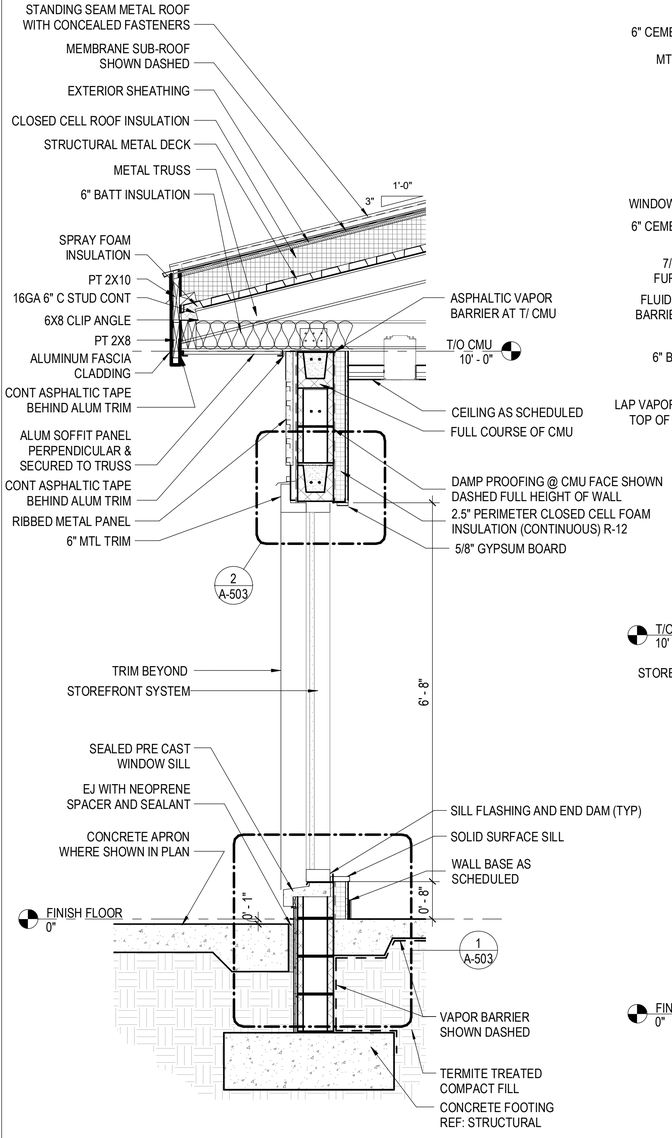

3 WALL SECTION 9
SCALE: 3/4" = 1'-0"

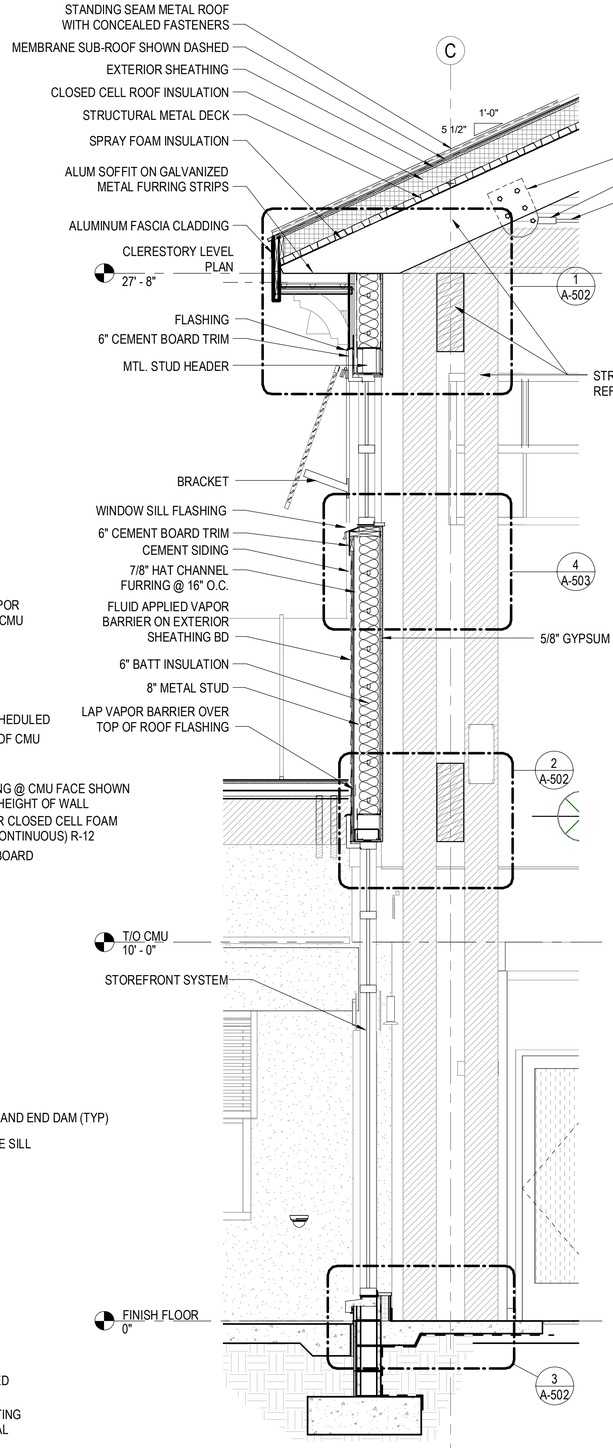

1 WALL SECTION 7
SCALE: 1/2" = 1'-0"

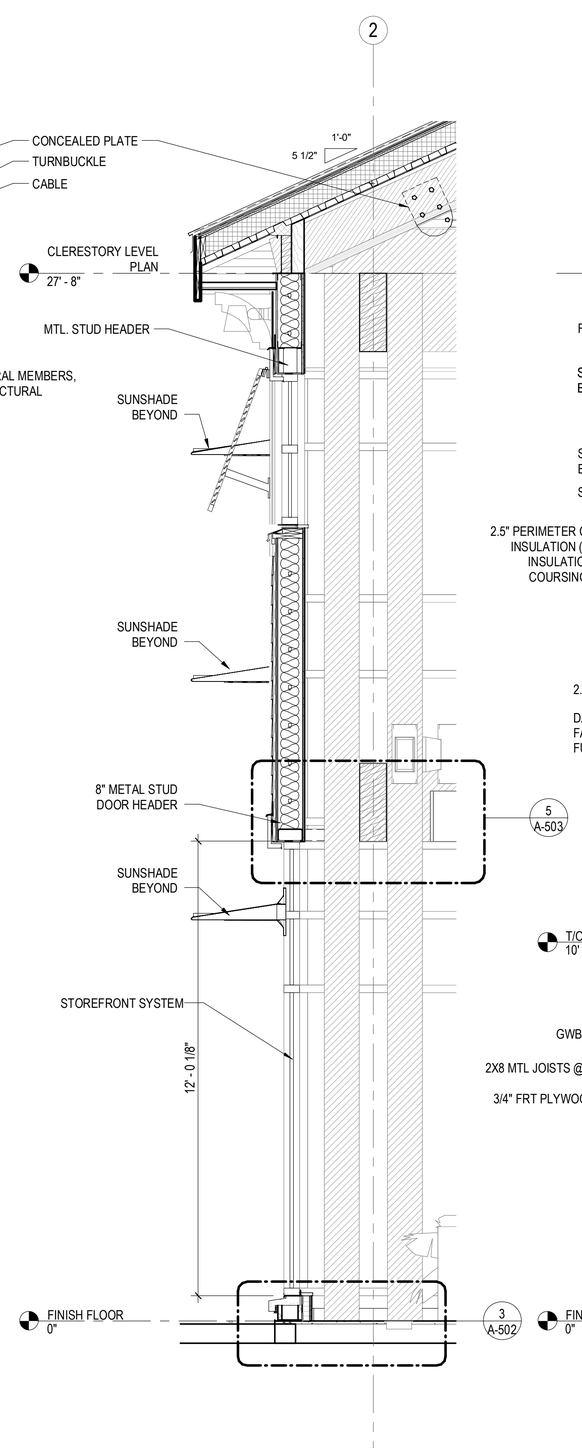

2 WALL SECTION 8
SCALE: 1/2" = 1'-0"

REFER TO DETAIL 1 & 3 THIS SHEET FOR ADDITIONAL NOTES AND DIMENSIONS

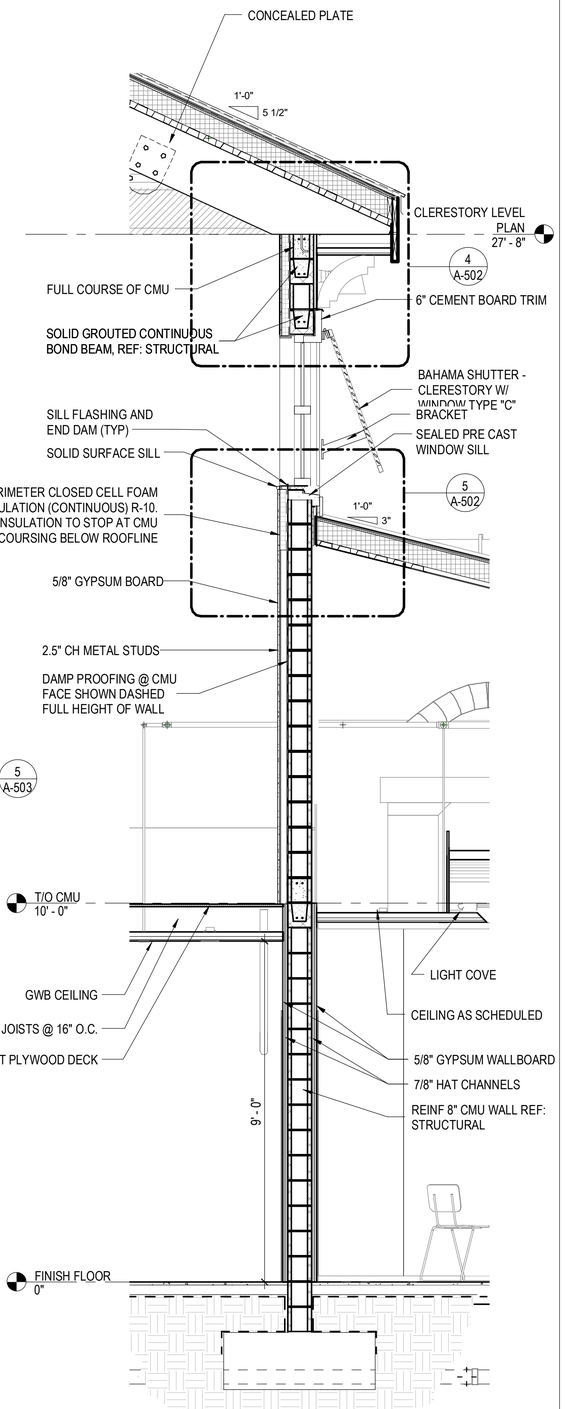

4 WALL SECTION 10
SCALE: 1/2" = 1'-0"

REFER TO DETAIL 1 & 3 THIS SHEET FOR ADDITIONAL NOTES AND DIMENSIONS

FOR PERMIT & BIDDING ONLY

AVCON
TRANSFORMING TODAY'S IDEAS INTO TOMORROW'S REALITY

THIS DOCUMENT CONTAINS PRIVILEGED AND PROPRIETARY INFORMATION, ALL OF WHICH IS EXPRESSLY PROVIDED BY AVCON, INC. FOR USE BY THE INTENDED RECIPIENT, AND FOR A SPECIFIC PURPOSE. WITHOUT THE EXPRESS WRITTEN CONSENT OF AVCON, INC. ANY DISTRIBUTION, REPRODUCTION, OR OTHER USE OF THIS DOCUMENT, IN WHOLE OR IN PART, IS STRICTLY PROHIBITED.

WILLIAM A. HAYWARD JR.
FL LICENSE NO.:AR0011007

NO.	DATE	REVISION	BY

WALL SECTIONS

100% DESIGN DRAWINGS

AIRPORT TERMINAL AND HANGAR DEVELOPMENT

PREPARED FOR

DEFUNIAK SPRINGS MUNICIPAL AIRPORT

DESIGNED BY:	CH
DRAWN BY:	DN
CHECKED BY:	DT
APPROVED BY:	WAH
PROJECT NO:	176232
DATE:	11/1/2021

SHEET NUMBER

A-313

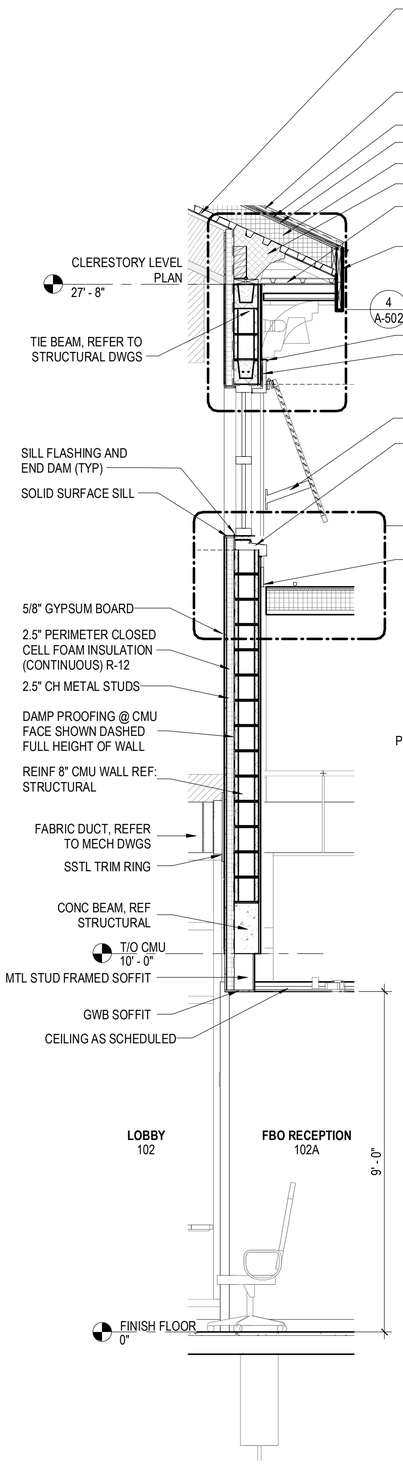

1 WALL SECTION 11
SCALE: 1/2" = 1'-0"

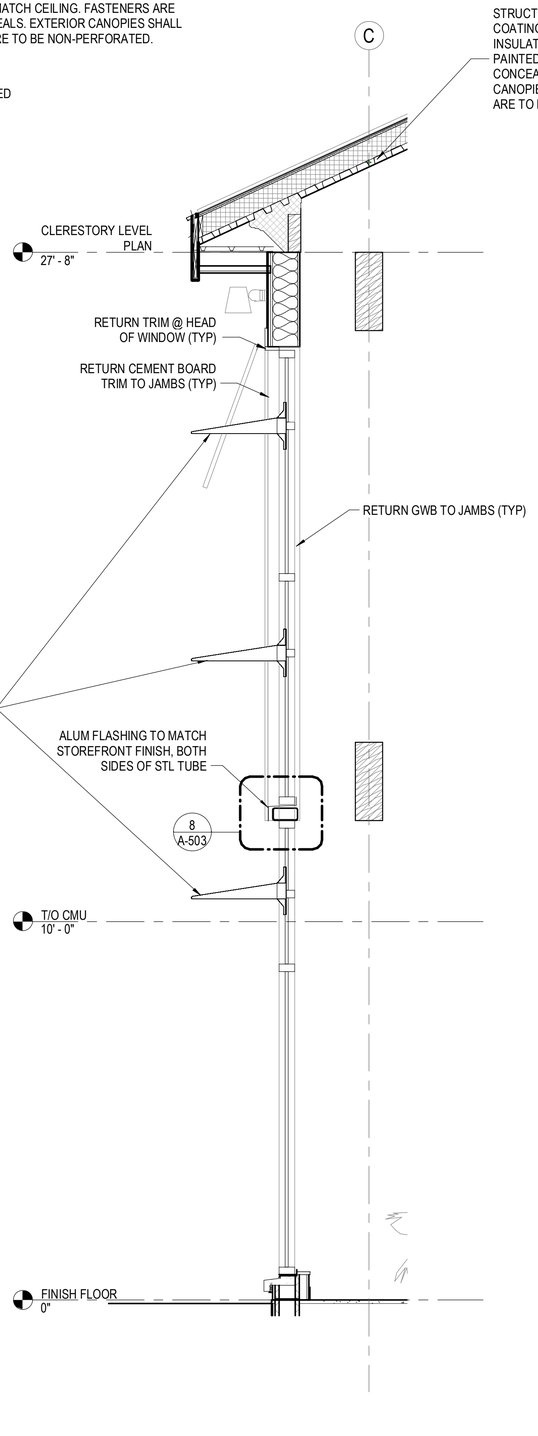

2 WALL SECTION 12
SCALE: 1/2" = 1'-0"

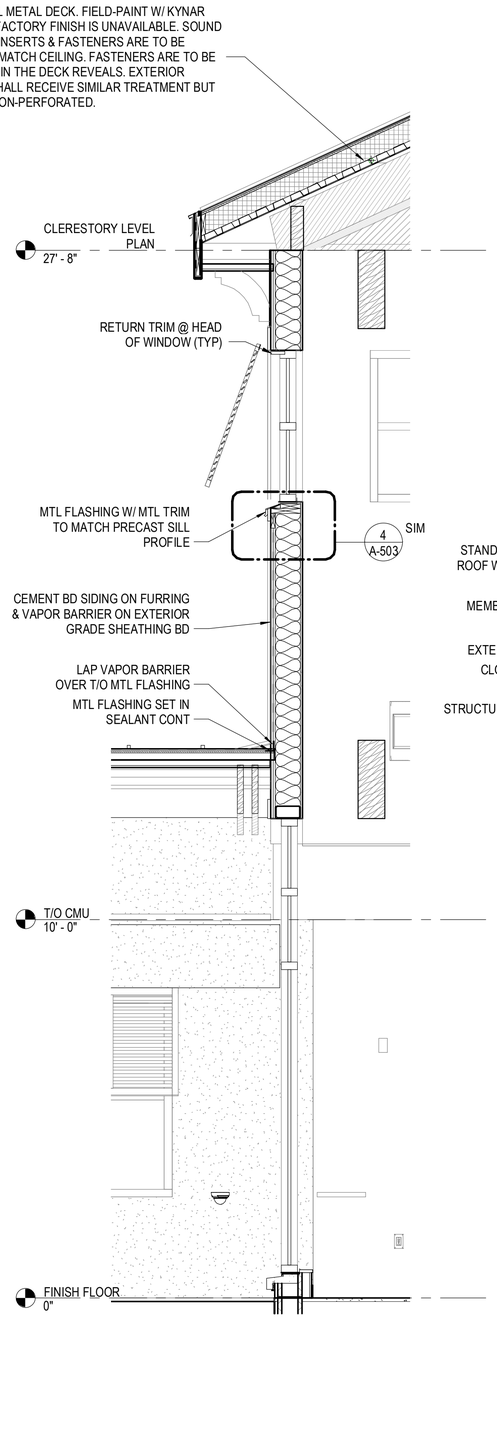

3 WALL SECTION 13
SCALE: 1/2" = 1'-0"

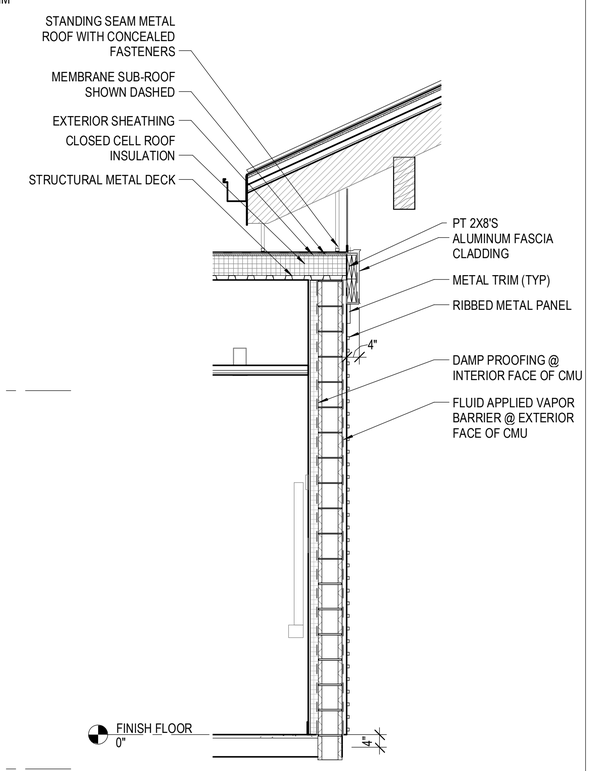

4 SECTION @ MEETING ROOM
SCALE: 1/2" = 1'-0"

FOR PERMIT & BIDDING ONLY

AVCON
TRANSFORMING TODAY'S IDEAS INTO TOMORROW'S REALITY

WILLIAM A. HAYWARD JR.
FL LICENSE NO.:AR0011007

NO.	DATE	REVISION	BY

WALL SECTIONS

100% DESIGN DRAWINGS

AIRPORT TERMINAL AND HANGAR DEVELOPMENT

PREPARED FOR
DEFUNIAK SPRINGS MUNICIPAL AIRPORT

DESIGNED BY:	Designer
DRAWN BY:	Author
CHECKED BY:	Checker
APPROVED BY:	WAH
PROJECT NO:	176232
DATE:	11/1/2021

SHEET NUMBER

A-314

THIS DOCUMENT CONTAINS PRIVILEGED AND PROPRIETARY INFORMATION, ALL OF WHICH IS EXPRESSLY PROVIDED BY AVCON, INC., FOR USE BY THE INTENDED RECIPIENT, AND FOR A SPECIFIC PURPOSE. WITHOUT THE EXPRESS WRITTEN CONSENT OF AVCON, INC., ANY DISTRIBUTION, REPRODUCTION, OR OTHER USE OF THIS DOCUMENT, IN WHOLE OR IN PART, IS STRICTLY PROHIBITED.

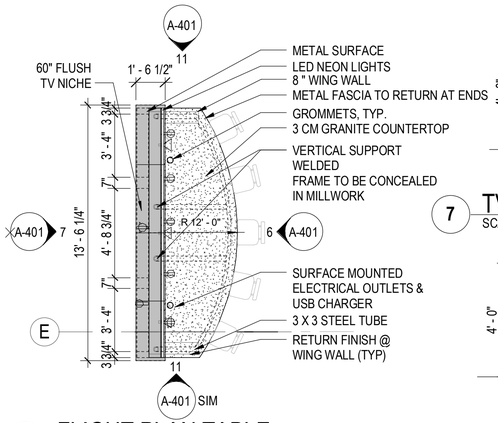

5 FLIGHT PLAN TABLE
SCALE: 1/4" = 1'-0"

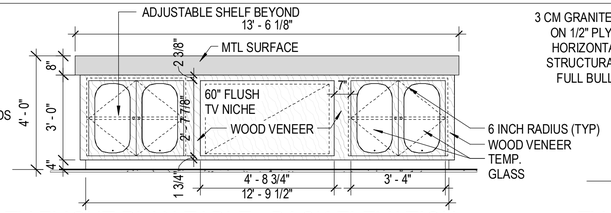

7 TV FLIGHT PLAN TABLE - BACK ELEVATION
SCALE: 3/8" = 1'-0"

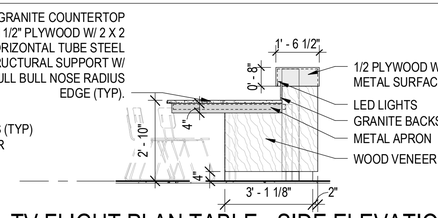

11 TV FLIGHT PLAN TABLE - SIDE ELEVATION
SCALE: 3/8" = 1'-0"

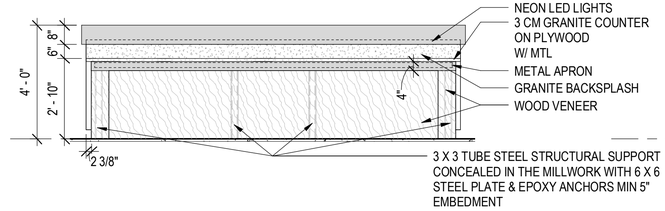

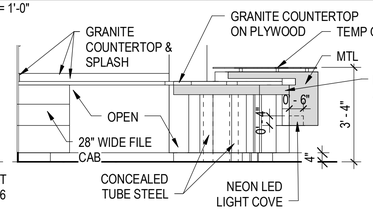

10 RECEPTION COUNTER - SIDE ELEVATION
SCALE: 3/8" = 1'-0"

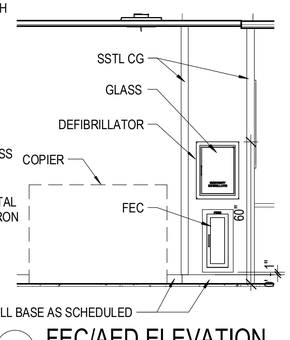

12 FEC/AED ELEVATION
SCALE: 3/8" = 1'-0"

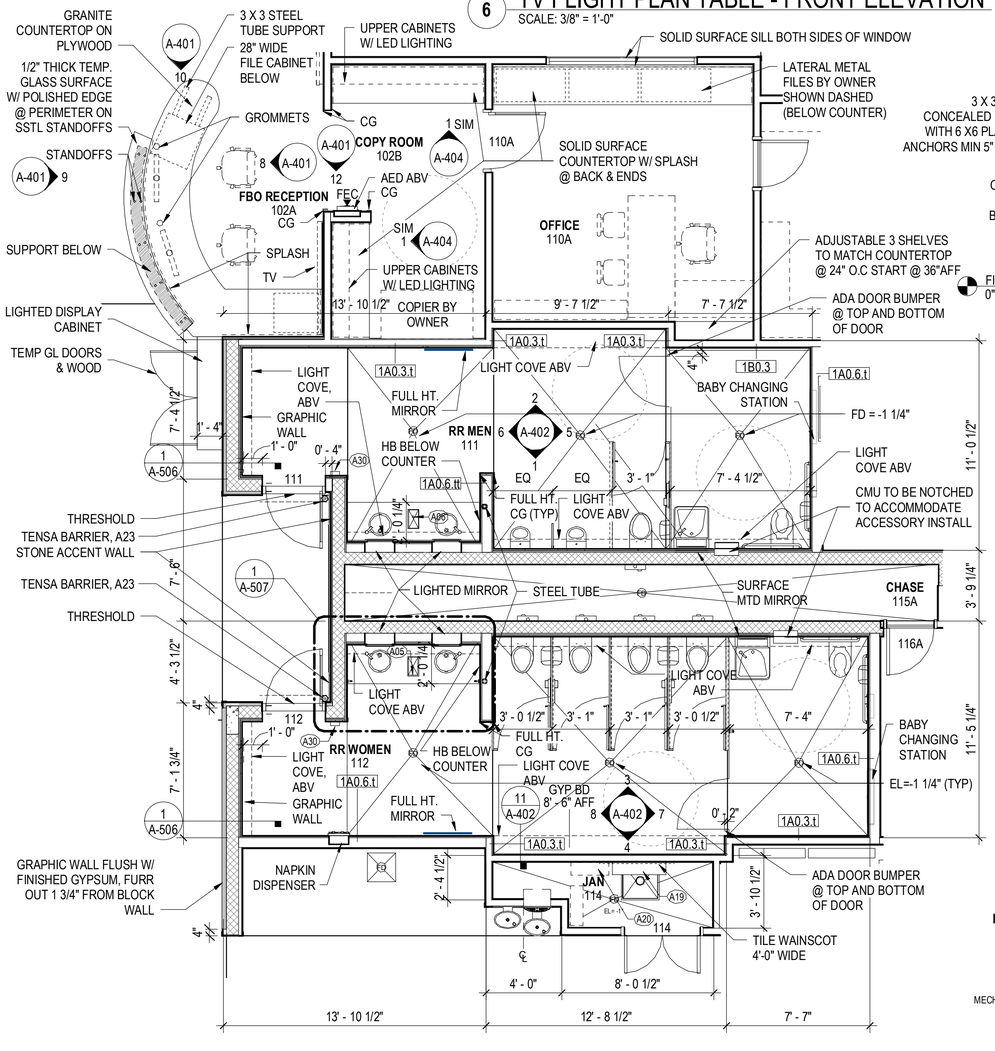

6 TV FLIGHT PLAN TABLE - FRONT ELEVATION
SCALE: 3/8" = 1'-0"

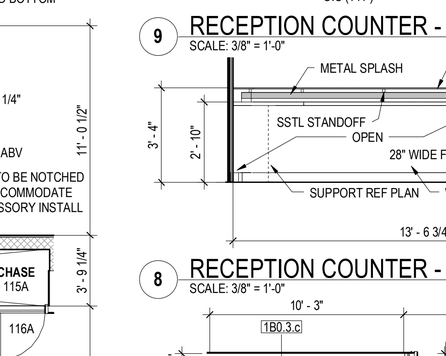

10 RECEPTION COUNTER - SIDE ELEVATION
SCALE: 3/8" = 1'-0"

9 RECEPTION COUNTER - FRONT ELEVATION
SCALE: 3/8" = 1'-0"

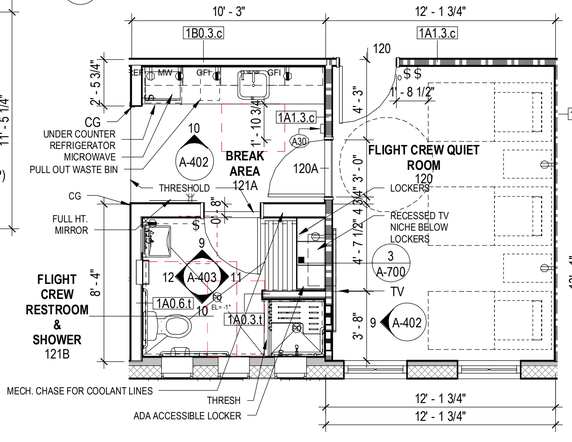

8 RECEPTION COUNTER - BACK ELEVATION
SCALE: 3/8" = 1'-0"

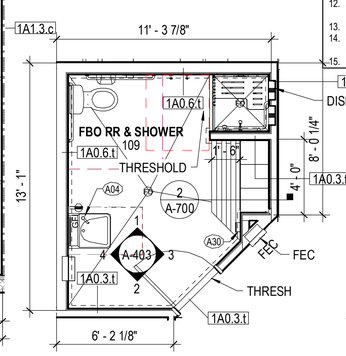

3 FBO RESTROOM MEN
SCALE: 1/4" = 1'-0"

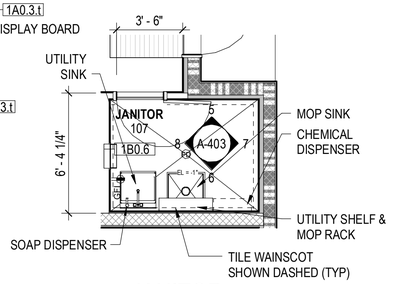

4 JANITOR
SCALE: 1/4" = 1'-0"

1 PUBLIC RESTROOMS
SCALE: 1/4" = 1'-0"

2 FLIGHT CREW QUIET ROOM
SCALE: 1/4" = 1'-0"

FOR PERMIT & BIDDING ONLY

ACCESSORIES SCHEDULE

#	DESCRIPTION	MODEL	COMMENTS
A01	MIRROR	BOBRICK/GAMCO	BACKLIT MIRROR W/ CUSTOM PAPER TOWEL DISPENSER WITH PLASTIC PAPER GUIDE FOR PAPER DISPENSING CONTROL
A02	MIRROR (ADA)	BOBRICK (SERIES)	MOUNT PER ADA REQUIREMENTS W SSTL TRIM. (1' 6" X 3' 10")
A03	FULL HEIGHT MIRROR	BOBRICK B-290 (SERIES)	CUSTOM SIZE (2'-6" X 6'-10" W/ 1" SSTL FRAME) TOP OF MIRROR TO ALIGN WITH TOP OF DOOR
A04	SOAP DISPENSER	SLOAN ESD-2000	MOUNT AT ADA SINK AND COUNTER (TYP)
A05	COUNTERTOP	CEASARSTONE QUARTZ - NOUGAT	QUARTZ
A06	THROUGH COUNTER TRIM/ WASTE CHUTE	CEASARSTONE - QUARTZ	MATCH COUNTERTOP
A07	UNDER COUNTER HOOK	JACKNOB 4290	MOUNT UNDER WOMEN'S RR SINK COUNTER
A08	TOILET PARTITION	PLAM/ FLOOR MOUNTED	W CONTINIOUS SSTL "U" BRACKET @ SUPPORT ENDS & SSTL ANCHORS @FLOOR.
A09	ADA DOOR BUMPER	JACKNOB 4151	MOUNTED ON TOP AND BOTTOM OF PARTITIONS WHERE INDICATED; 2 PER DOOR (TYP)
A10	COAT HOOK & DOOR BUMBER	BOBRICK B-6717	MOUNT AT PARTITION NOT DOOR
A11	URINAL SCREEN BRACKET	JACKNOB 2369	CONT. SSTL BRACKET
A12	GRAB BAR - 36" REAR WALL	BOBRICK B-5806-36	MOUNT PER ADA REQUIREMENTS.
A13	GRAB BAR - 42" SIDE WALL	BOBRICK B-5806-42	MOUNT PER ADA REQUIREMENTS.
A14	COMBINATION TOILET TISSUE UNIT & SEAT DISPENSER (RECESSED @WALL)	BOBRICK B-3574/3575	MALE / FEMALE WITH NAPKIN DISPOSAL; FLUSH WITH WALL AT GRAB BAR - TISSUE HOLDER WITHIN 7"-9" OF TOILET SEAT (LH/RH MODELS)
A15	COMBINATION TOILET TISSUE UNIT & SEAT DISPENSER (THROUGH PARTITION)	BOBRICK B-357/3571	MALE / FEMALE WITH NAPKIN DISPOSAL; FLUSH WITH WALL AT GRAB BAR - TISSUE HOLDER WITHIN 7"-9" OF TOILET SEAT (LH/RH MODELS)
A16	BABY CHANGING STATION (RECESSED)	BOBRICK KB110-SSRE	
A17	SANITARY NAPKIN VENDOR (RECESSED)	BOBRICK B-4706C	COST TBD
A18	COMBINATION PAPER TOWEL DISPENSER/WASTE RECEPTACLE	BOBRICK B-3940	W/ LINER MATE; 12 GAL
A19	UTILITY SHELF W/ MOP & BROOM HOLDER	BOBRICK B-239 X 34	3 HOOKS
A20	CHEMICAL DISPENSER	BY OWNER	CONNECT TO HOT WATER
A21	CORNER GUARD		1 1/2" X 1 1/2" SSTL. FULL HT. U.N.O.
A22	UNDER COUNTER SINK WASTE RECEPTACLE	BOBRICK B-2260	22" TALL; 13 GALLON CAPACITY
A23	TENSABARRIER	TENSABARRIER 896CM	AT EACH RESTROOM ENTRIES
A24	ADA FOLD DOWN SHOWER SEAT (REVERSEABLE)	BOBRICK B-5181	MOUNT PER ADA REQUIREMENTS. ALL FASTENERS @ WALL BE SEALED
A25	SHOWER GRAB BAR (90 DEGREES)	BOBRICK B-6861	MOUNT PER ADA REQUIREMENTS. ALL FASTENERS @ WALL BE SEALED
A26	SHOWER ROD & CURTAIN	BOBRICK B-207 X 36 W/ B 204-1 (HOOK) W/ B-204-2 (CURTAIN)	PROVIDE HOOKS W/ SHOWER CURTAIN; CONCEALED FASTENERS
A27	RECESSED SOAP SHELF	SEE SCHEDULE	REF. TILE SPEC; (2) PER SHOWER
A28	ROBE HOOK	BOBRICK B-549	
A29	PURSE POUCH	JACKNOB 110300	MOUNT NEAR EACH TOILET
A30	HAND SANITIZER	BY OWNER	

SHEET NOTES

1. REFER TO ACCESSORY SCHEDULE AND ADA STANDARDS FOR MOUNTING HEIGHTS.
2. ALL WALL TILE TO EXTEND TO TOP OF WALL @ LIGHT COVE.
3. REFER TO CLG PLANS FOR VARIED ELEVATIONS.
4. TOILET PARTITIONS TO BE FLOOR SUPPORTED WITH SSTL FASTENERS.
5. REFER TO INTERIOR ELEVATIONS FOR ADDITIONAL ACCESSORY INFORMATION.
6. ALL SHOWER WALLS AND BASE TO RECEIVE MEMBRANE WP. TOILET PARTITIONS AND URINAL SCREENS; CONFIRM LAYOUT PRIOR TO CONCEALING IN THE WALL
7. METAL COVE TRIM TO BE PROVIDED AT ALL WALL TILE FLOOR INTERSECTIONS
8. RADIUSED METAL TRIM TO BE PROVIDED AT ALL TILES CORNERS.
9. ALL RESTROOM HOSE BIBS SHALL BE UNDER COUNTER, RECESSED & KEYED OPERATION
10. REFER TO PLUMBING DRAWINGS FOR ALL PLUMBING FIXTURES.
11. FIXTURES WITHOUT CHASE WAYS SHALL BE FLOOR MOUNTED, U.N.O.
12. ALL ADA PLUMBING FIXTURES TO BE MOUNTED PER ADA REQUIREMENTS, INCLUDING RELATIONSHIP TO ACCESSORIES.
13. VERIFY ALL WALL DEPTHS FOR RECESSED UNITS AS PART OF FRAMING LAYOUT.
14. VERIFY ROUGH IN, LOCATION & MOUNTING HT OF ALL ACCESSORIES PRIOR TO CONCEALING FRAMING.
15. ALL MOUNTED SINKS SHALL BE INSTALLED WITH CONCEALED CARRIERS.

AVCON
TRANSFORMING TODAY'S IDEAS INTO TOMORROW'S REALITY

WILLIAM A. HAYWARD JR.
FL LICENSE NO.:AR0011007

NO.	DATE	REVISION	BY
		um No. 1	

ENLARGED PLANS

100% DESIGN DRAWINGS

AIRPORT TERMINAL AND HANGAR DEVELOPMENT

PREPARED FOR
DEFUNIAK SPRINGS MUNICIPAL AIRPORT

DESIGNED BY:	CH
DRAWN BY:	JP
CHECKED BY:	DT
APPROVED BY:	WAH
PROJECT NO:	176232
DATE:	11/1/2021

SHEET NUMBER
A-401

THIS DOCUMENT CONTAINS PRIVILEGED AND PROPRIETARY INFORMATION, ALL OF WHICH IS EXPRESSLY PROVIDED BY AVCON, INC., FOR USE BY THE INTENDED RECIPIENT, AND FOR A SPECIFIC PURPOSE, WITHOUT THE EXPRESS WRITTEN CONSENT OF AVCON, INC. ANY DISTRIBUTION, REPRODUCTION, OR OTHER USE OF THIS DOCUMENT, IN WHOLE OR IN PART, IS STRICTLY PROHIBITED.

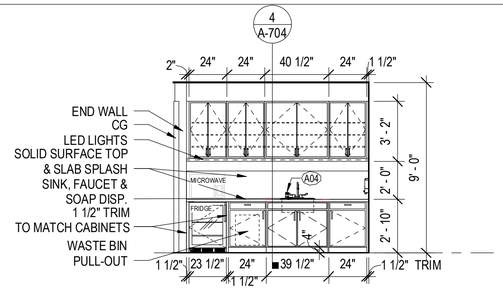

10 FLIGHT CREW BR - INTERIOR ELEV

SCALE: 1/4" = 1'-0"

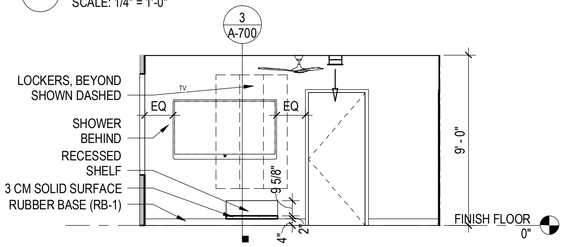

9 FLIGHT CREW QR - INTERIOR ELEV

SCALE: 1/4" = 1'-0"

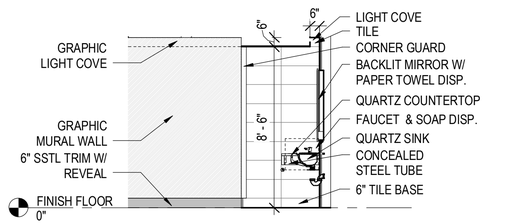

8 RR WOMEN - INTERIOR ELEV

SCALE: 1/4" = 1'-0"

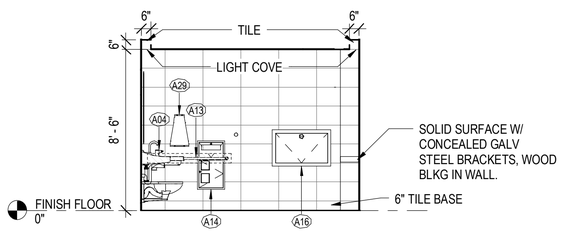

7 RR WOMEN - INTERIOR ELEV

SCALE: 1/4" = 1'-0"

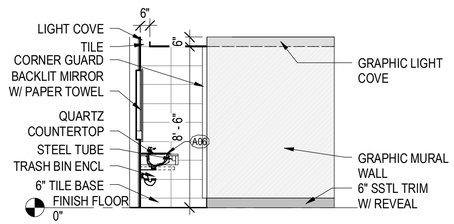

6 RR MEN - INTERIOR ELEV

SCALE: 1/4" = 1'-0"

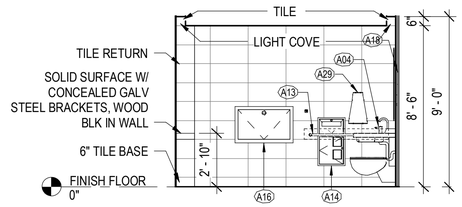

5 RR MEN - INTERIOR ELEV

SCALE: 1/4" = 1'-0"

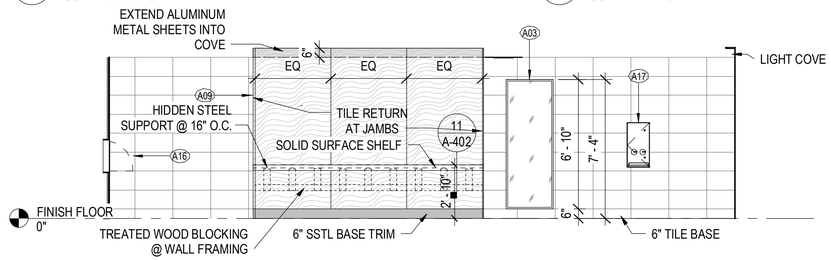

4 RR WOMEN - INTERIOR ELEV

SCALE: 1/4" = 1'-0"

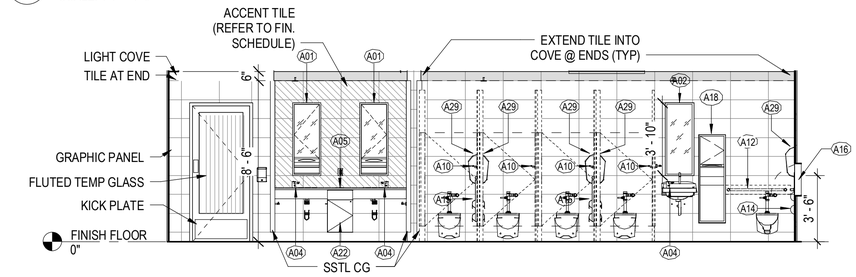

3 RR WOMEN - INTERIOR ELEV

SCALE: 1/4" = 1'-0"

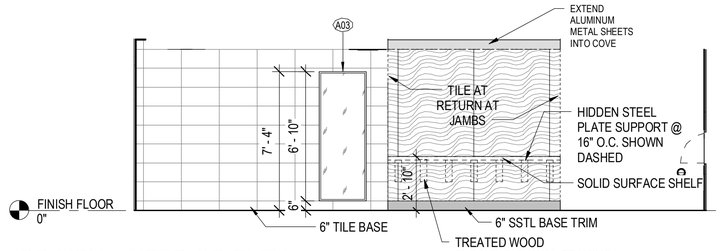

2 RR MEN - INTERIOR ELEV

SCALE: 1/4" = 1'-0"

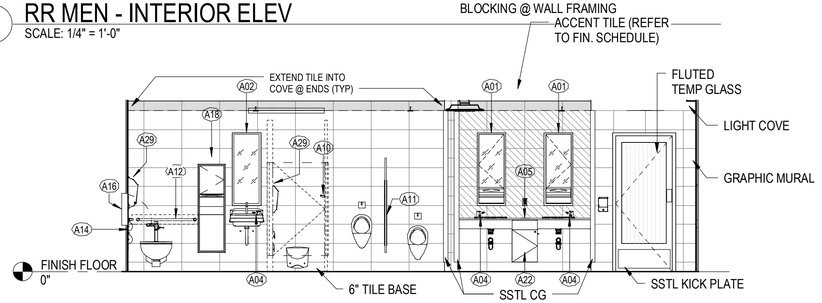

1 RR MEN - INTERIOR ELEV

SCALE: 1/4" = 1'-0"

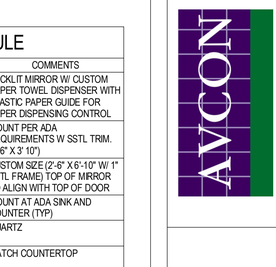

11 SHELF DETAIL

SCALE: 1" = 1'-0"

ACCESSORIES SCHEDULE

#	DESCRIPTION	MODEL	COMMENTS
A01	MIRROR	BOBRICK/GAMCO	BACKLIT MIRROR W/ CUSTOM PAPER TOWEL DISPENSER WITH PLASTIC PAPER GUIDE FOR PAPER DISPENSING CONTROL
A02	MIRROR (ADA)	BOBRICK (SERIES)	MOUNT PER ADA REQUIREMENTS W SSTL TRIM. (1' 6" X 3' 10")
A03	FULL HEIGHT MIRROR	BOBRICK B-290 (SERIES)	CUSTOM SIZE (2'-6" X 6'-10" W/ 1" SSTL FRAME) TOP OF MIRROR TO ALIGN WITH TOP OF DOOR
A04	SOAP DISPENSER	SLOAN ESD-2000	MOUNT AT ADA SINK AND COUNTER (TYP)
A05	COUNTERTOP	CEASARSTONE QUARTZ - NOUGAT	QUARTZ
A06	THROUGH COUNTER TRIM/ WASTE CHUTE	CEASARSTONE - QUARTZ	MATCH COUNTERTOP
A07	UNDER COUNTER HOOK	JACKNOB 4290	MOUNT UNDER WOMEN'S RR SINK COUNTER
A08	TOILET PARTITION	PLAM/ FLOOR MOUNTED	W CONTINIOUS SSTL "U" BRACKET @ SUPPORT ENDS & SSTL ANCHORS @FLOOR.
A09	ADA DOOR BUMPER	JACKNOB 4151	MOUNTED ON TOP AND BOTTOM OF PARTITIONS WHERE INDICATED; 2 PER DOOR (TYP)
A10	COAT HOOK & DOOR BUMBER	BOBRICK B-6717	MOUNT AT PARTITION NOT DOOR
A11	URINAL SCREEN BRACKET	JACKNOB 2369	CONT. SSTL BRACKET
A12	GRAB BAR - 36" REAR WALL	BOBRICK B-5806-36	MOUNT PER ADA REQUIREMENTS.
A13	GRAB BAR - 42" SIDE WALL	BOBRICK B-5806-42	MOUNT PER ADA REQUIREMENTS.
A14	COMBINATION TOILET TISSUE UNIT & SEAT DISPENSER (RECESSED @WALL)	BOBRICK B-3574/3575	MALE / FEMALE WITH NAPKIN DISPOSAL; FLUSH WITH WALL AT GRAB BAR - TISSUE HOLDER WITHIN 7"-9" OF TOILET SEAT (LH/RH MODELS)
A15	COMBINATION TOILET TISSUE UNIT & SEAT DISPENSER (THROUGH PARTITION)	BOBRICK B-357/3571	MALE / FEMALE WITH NAPKIN DISPOSAL; FLUSH WITH WALL AT GRAB BAR - TISSUE HOLDER WITHIN 7"-9" OF TOILET SEAT (LH/RH MODELS)
A16	BABY CHANGING STATION (RECESSED)	BOBRICK KB110-SSRE	
A17	SANITARY NAPKIN VENDOR (RECESSED)	BOBRICK B-4706C	COST TBD
A18	COMBINATION PAPER TOWEL DISPENSER/WASTE RECEPTACLE	BOBRICK B-3940	W/ LINER MATE; 12 GAL
A19	UTILITY SHELF W/ MOP & BROOM HOLDER	BOBRICK B-239 X 34	3 HOOKS
A20	CHEMICAL DISPENSER	BY OWNER	CONNECT TO HOT WATER
A21	CORNER GUARD		1 1/2" X 1 1/2" SSTL. FULL HT. U.N.O.
A22	UNDER COUNTER SINK WASTE RECEPTACLE	BOBRICK B-2260	22" TALL; 13 GALLON CAPACITY
A23	TENSABARRIER	TENSABARRIER 896CM	AT EACH RESTROOM ENTRIES
A24	ADA FOLD DOWN SHOWER SEAT (REVERSEABLE)	BOBRICK B-5181	MOUNT PER ADA REQUIREMENTS. ALL FASTENERS @ WALL BE SEALED
A25	SHOWER GRAB BAR (90 DEGREES)	BOBRICK B-6861	MOUNT PER ADA REQUIREMENTS. ALL FASTENERS @ WALL BE SEALED
A26	SHOWER ROD & CURTAIN	BOBRICK B-207 X 36 W/ B 204-1 (HOOK) W/ B-204-2 (CURTAIN)	PROVIDE HOOKS W/ SHOWER CURTAIN; CONCEALED FASTENERS
A27	RECESSED SOAP SHELF	SEE SCHEDULE	REF. TILE SPEC; (2) PER SHOWER
A28	ROBE HOOK	BOBRICK B-549	
A29	PURSE POUCH	JACKNOB 110300	MOUNT NEAR EACH TOILET
A30	HAND SANITIZER	BY OWNER	

SHEET NOTES

1. REFER TO ACCESSORY SCHEDULE AND ADA STANDARDS FOR MOUNTING HEIGHTS.
2. ALL WALL TILE TO EXTEND TO TOP OF WALL @ LIGHT COVE.
3. REFER TO CLG PLANS FOR VARIED ELEVATIONS.
4. TOILET PARTITIONS TO BE FLOOR SUPPORTED WITH SSTL FASTENERS.
5. REFER TO ACCESSORY PLAN FOR ADDITIONAL ACCESSORY INFORMATION.
6. ALL SHOWER WALLS AND BASE TO RECEIVE MEMBRANE WP. TOILET PARTITIONS AND URINAL SCREENS: CONFIRM LAYOUT PRIOR TO CONCEALING IN THE WALL
7. METAL COVE TRIM TO BE PROVIDED AT ALL WALL TILE FLOOR INTERSECTIONS
8. RADIUSED METAL TRIM TO BE PROVIDED AT ALL TILES CORNERS.
9. ALL RESTROOM HOSE BIBS SHALL BE UNDER COUNTER, RECESSED & KEYED OPERATION
10. REFER TO PLUMBING DRAWINGS FOR ALL PLUMBING FIXTURES
11. FIXTURES WITHOUT CHASE WAYS SHALL BE FLOOR MOUNTED, U.N.O.
12. ALL ADA PLUMBING FIXTURES TO BE MOUNTED PER ADA REQUIREMENTS, INCLUDING RELATIONSHIP TO ACCESSORIES.
13. VERIFY ALL WALL DEPTHS FOR RECESSED UNITS AS PART OF FRAMING LAYOUT.
14. VERIFY ROUGH IN, LOCATION & MOUNTING HT OF ALL ACCESSORIES PRIOR TO CONCEALING FRAMING.
15. ALL MOUNTED SINKS SHALL BE INSTALLED WITH CONCEALED CARRIERS.

FOR PERMIT & BIDDING ONLY

AVCON

TRANSFORMING TODAY'S IDEAS INTO TOMORROW'S REALITY

WILLIAM A. HAYWARD JR.
FL LICENSE NO.:AR0011007

NO.	DATE	REVISION	BY
		um No. 1	

INTERIOR ELEVATIONS

100% DESIGN DRAWINGS

AIRPORT TERMINAL AND HANGAR DEVELOPMENT

PREPARED FOR

DEFUNIAK SPRINGS MUNICIPAL AIRPORT

DESIGNED BY:	CH
DRAWN BY:	JP
CHECKED BY:	DT
APPROVED BY:	WAH
PROJECT NO:	176232
DATE:	11/1/2021

SHEET NUMBER

A-402

THIS DOCUMENT CONTAINS PRIVILEGED AND PROPRIETARY INFORMATION, ALL OF WHICH IS EXPRESSLY PROVIDED BY AVCON, INC., FOR USE BY THE INTENDED RECIPIENT, AND FOR A SPECIFIC PURPOSE, WITHOUT THE EXPRESS WRITTEN CONSENT OF AVCON, INC. ANY DISTRIBUTION, REPRODUCTION, OR OTHER USE OF THIS DOCUMENT, IN WHOLE OR IN PART, IS STRICTLY PROHIBITED.

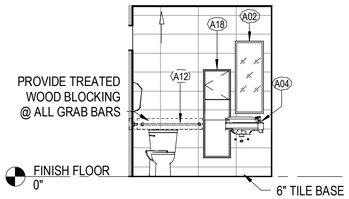

12 FLIGHT CREW RR - INTERIOR ELEV
SCALE: 1/4" = 1'-0"

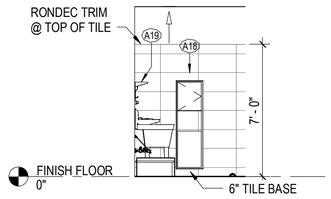

8 JANITOR RM 107 - INTERIOR ELEV
SCALE: 1/4" = 1'-0"

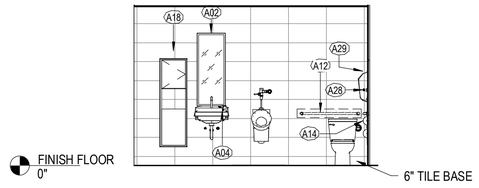

4 FBO RESTROOM - INTERIOR ELEV
SCALE: 1/4" = 1'-0"

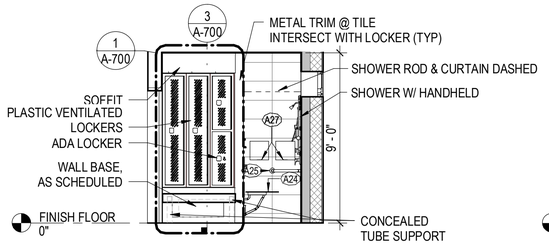

11 FLIGHT CREW RR - INTERIOR ELEV
SCALE: 1/4" = 1'-0"

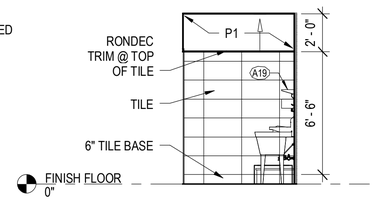

7 JANITOR RM 107 - INTERIOR ELEV
SCALE: 1/4" = 1'-0"

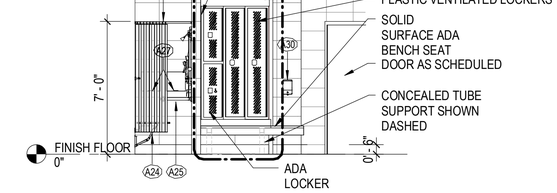

3 FBO RESTROOM - INTERIOR ELEV
SCALE: 1/4" = 1'-0"

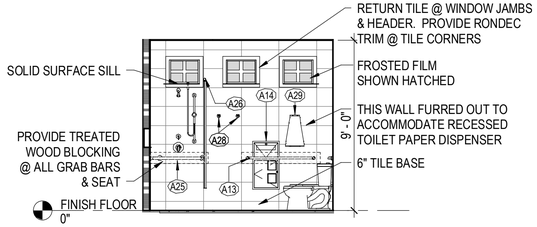

10 FLIGHT CREW RR - INTERIOR ELEV
SCALE: 1/4" = 1'-0"

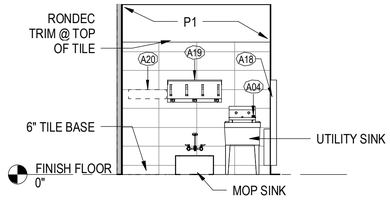

6 JANITOR RM 107 - INTERIOR ELEV
SCALE: 1/4" = 1'-0"

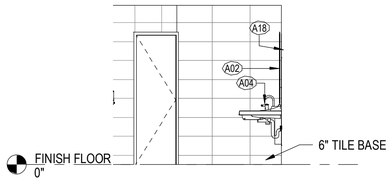

2 FBO RESTROOM - INTERIOR ELEV
SCALE: 1/4" = 1'-0"

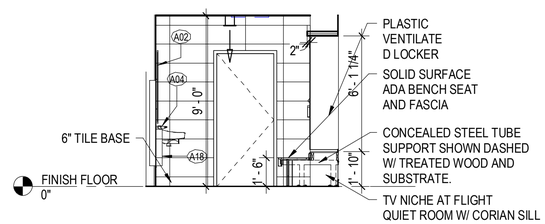

9 FLIGHT CREW RR - INTERIOR ELEV
SCALE: 1/4" = 1'-0"

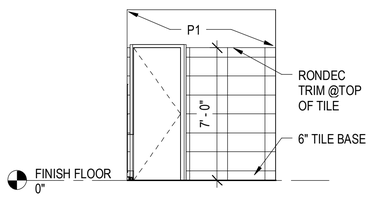

5 JANITOR RM 107 - INTERIOR ELEV
SCALE: 1/4" = 1'-0"

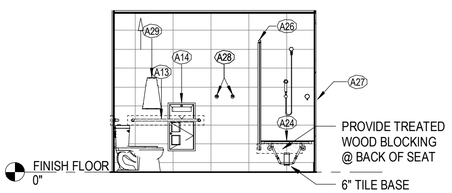

1 FBO RESTROOM - INTERIOR ELEV
SCALE: 1/4" = 1'-0"

ACCESSORIES SCHEDULE

#	DESCRIPTION	MODEL	COMMENTS
A01	MIRROR	BOBRICK/GAMCO	BACKLIT MIRROR W/ CUSTOM PAPER TOWEL DISPENSER WITH PLASTIC PAPER GUIDE FOR PAPER DISPENSING CONTROL
A02	MIRROR (ADA)	BOBRICK (SERIES)	MOUNT PER ADA REQUIREMENTS W SSTL TRIM. (1'6" X 3'10")
A03	FULL HEIGHT MIRROR	BOBRICK B-290 (SERIES)	CUSTOM SIZE (2'-6" X 6'-10" W/ 1" SSTL FRAME) TOP OF MIRROR TO ALIGN WITH TOP OF DOOR
A04	SOAP DISPENSER	SLOAN ESD-2000	MOUNT AT ADA SINK AND COUNTER (TYP)
A05	COUNTERTOP	CEASARSTONE QUARTZ - NOUGAT	QUARTZ
A06	THROUGH COUNTER TRIM/ WASTE CHUTE	CEASARSTONE - QUARTZ	MATCH COUNTERTOP
A07	UNDER COUNTER HOOK	JACKNOB 4290	MOUNT UNDER WOMEN'S RR SINK COUNTER
A08	TOILET PARTITION	PLAM/ FLOOR MOUNTED	W CONTINIOUS SSTL "U" BRACKET @ SUPPORT ENDS & SSTL ANCHORS @FLOOR.
A09	ADA DOOR BUMPER	JACKNOB 4151	MOUNTED ON TOP AND BOTTOM OF PARTITIONS WHERE INDICATED; 2 PER DOOR (TYP)
A10	COAT HOOK & DOOR BUMBER	BOBRICK B-6717	MOUNT AT PARTITION NOT DOOR
A11	URINAL SCREEN BRACKET	JACKNOB 2369	CONT. SSTL BRACKET
A12	GRAB BAR - 36" REAR WALL	BOBRICK B-5806-36	MOUNT PER ADA REQUIREMENTS.
A13	GRAB BAR - 42" SIDE WALL	BOBRICK B-5806-42	MOUNT PER ADA REQUIREMENTS.
A14	COMBINATION TOILET TISSUE UNIT & SEAT DISPENSER (RECESSED @WALL)	BOBRICK B-3574/3575	MALE / FEMALE WITH NAPKIN DISPOSAL; FLUSH WITH WALL AT GRAB BAR - TISSUE HOLDER WITHIN 7'-9" OF TOILET SEAT (LH/RH MODELS)
A15	COMBINATION TOILET TISSUE UNIT & SEAT DISPENSER (THROUGH PARTITION)	BOBRICK B-357/3571	MALE / FEMALE WITH NAPKIN DISPOSAL; FLUSH WITH WALL AT GRAB BAR - TISSUE HOLDER WITHIN 7'-9" OF TOILET SEAT (LH/RH MODELS)
A16	BABY CHANGING STATION (RECESSED)	BOBRICK KB110-SSRE	
A17	SANITARY NAPKIN VENDOR (RECESSED)	BOBRICK B-4706C	COST TBD
A18	COMBINATION PAPER TOWEL DISPENSER/WASTE RECEPTACLE	BOBRICK B-3940	W/ LINER MATE; 12 GAL
A19	UTILITY SHELF W/ MOP & BROOM HOLDER	BOBRICK B-239 X 34	3 HOOKS
A20	CHEMICAL DISPENSER	BY OWNER	CONNECT TO HOT WATER
A21	CORNER GUARD		1 1/2" X 1 1/2" SSTL. FULL HT. U.N.O.
A22	UNDER COUNTER SINK WASTE RECEPTACLE	BOBRICK B-2260	22" TALL; 13 GALLON CAPACITY
A23	TENSABARRIER	TENSABARRIER 896CM	AT EACH RESTROOM ENTRIES
A24	ADA FOLD DOWN SHOWER SEAT (REVERSEABLE)	BOBRICK B-5181	MOUNT PER ADA REQUIREMENTS. ALL FASTENERS @ WALL BE SEALED
A25	SHOWER GRAB BAR (90 DEGREES)	BOBRICK B-6861	MOUNT PER ADA REQUIREMENTS. ALL FASTENERS @ WALL BE SEALED
A26	SHOWER ROD & CURTAIN	BOBRICK B-207 X 36 W/ B 204-1 (HOOK) W/ B-204-2 (CURTAIN)	PROVIDE HOOKS W/ SHOWER CURTAIN; CONCEALED FASTENERS
A27	RECESSED SOAP SHELF	SEE SCHEDULE	REF. TILE SPEC; (2) PER SHOWER
A28	ROBE HOOK	BOBRICK B-549	
A29	PURSE POUCH	JACKNOB 110300	MOUNT NEAR EACH TOILET
A30	HAND SANITIZER	BY OWNER	

SHEET NOTES

1. REFER TO ACCESSORY SCHEDULE AND ADA STANDARDS FOR MOUNTING HEIGHTS.
2. ALL WALL TILE TO EXTEND TO TOP OF WALL @ LIGHT COVE.
3. REFER TO CLG PLANS FOR VARIED ELEVATIONS.
4. TOILET PARTITIONS TO BE FLOOR SUPPORTED WITH SSTL FASTENERS.
5. REFER TO ACCESSORY PLAN FOR ADDITIONAL ACCESSORY INFORMATION.
6. ALL SHOWER WALLS AND BASE TO RECEIVE MEMBRANE WP. TOILET PARTITIONS AND URINAL SCREENS; CONFIRM LAYOUT PRIOR TO CONCEALING IN THE WALL
7. METAL COVE TRIM TO BE PROVIDED AT ALL WALL TILE FLOOR INTERSECTIONS
8. RADIUSED METAL TRIM TO BE PROVIDED AT ALL TILES CORNERS.
9. ALL RESTROOM HOSE BIBS SHALL BE UNDER COUNTER, RECESSED & KEYED OPERATION.
10. REFER TO PLUMBING DRAWINGS FOR ALL PLUMBING FIXTURES
11. FIXTURES WITHOUT CHASE WAYS SHALL BE FLOOR MOUNTED, U.N.O.
12. ALL ADA PLUMBING FIXTURES TO BE MOUNTED PER ADA REQUIREMENTS, INCLUDING RELATIONSHIP TO ACCESSORIES.
13. VERIFY ALL WALL DEPTHS FOR RECESSED UNITS AS PART OF FRAMING LAYOUT.
14. VERIFY ROUGH IN, LOCATION & MOUNTING HT OF ALL ACCESSORIES PRIOR TO CONCEALING FRAMING.
15. ALL MOUNTED SINKS SHALL BE INSTALLED WITH CONCEALED CARRIERS.

0 2' - 0" 4' - 0" 8' - 0"

SCALE: 1/4" = 1' - 0"

FOR PERMIT & BIDDING ONLY

AVCON
TRANSFORMING TODAY'S IDEAS INTO TOMORROW'S REALITY

WILLIAM A. HAYWARD JR.
FL LICENSE NO.:AR0011007

NO.	DATE	REVISION	BY
2	11/8/21	ISSUED FOR REBID um No. 1	WAH

INTERIOR ELEVATIONS

100% DESIGN DRAWINGS

AIRPORT TERMINAL AND HANGAR DEVELOPMENT

PREPARED FOR

DEFUNIAK SPRINGS MUNICIPAL AIRPORT

DESIGNED BY:	CH
DRAWN BY:	AB
CHECKED BY:	DT
APPROVED BY:	WAH
PROJECT NO:	176232
DATE:	11/1/2021

SHEET NUMBER

A-403

THIS DOCUMENT CONTAINS PRIVILEGED AND PROPRIETARY INFORMATION, ALL OF WHICH IS EXPRESSLY PROVIDED BY AVCON, INC., FOR USE BY THE INTENDED RECIPIENT, AND FOR A SPECIFIC PURPOSE, WITHOUT THE EXPRESS WRITTEN CONSENT OF AVCON, INC. ANY DISTRIBUTION, REPRODUCTION, OR OTHER USE OF THIS DOCUMENT, IN WHOLE OR IN PART, IS STRICTLY PROHIBITED.

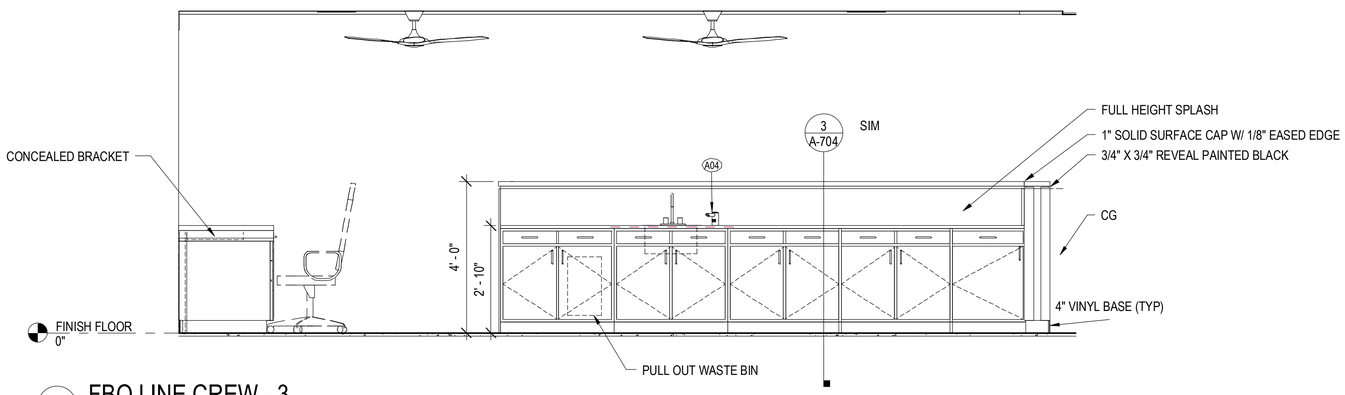

4 FBO LINE CREW - 3
SCALE: 1/2" = 1'-0"

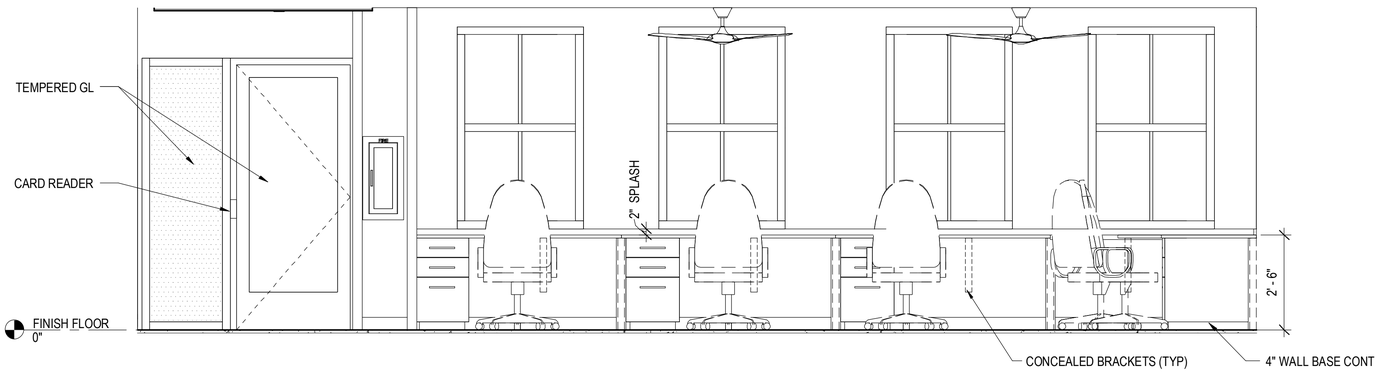

3 FBO LINE CREW - 1
SCALE: 1/2" = 1'-0"

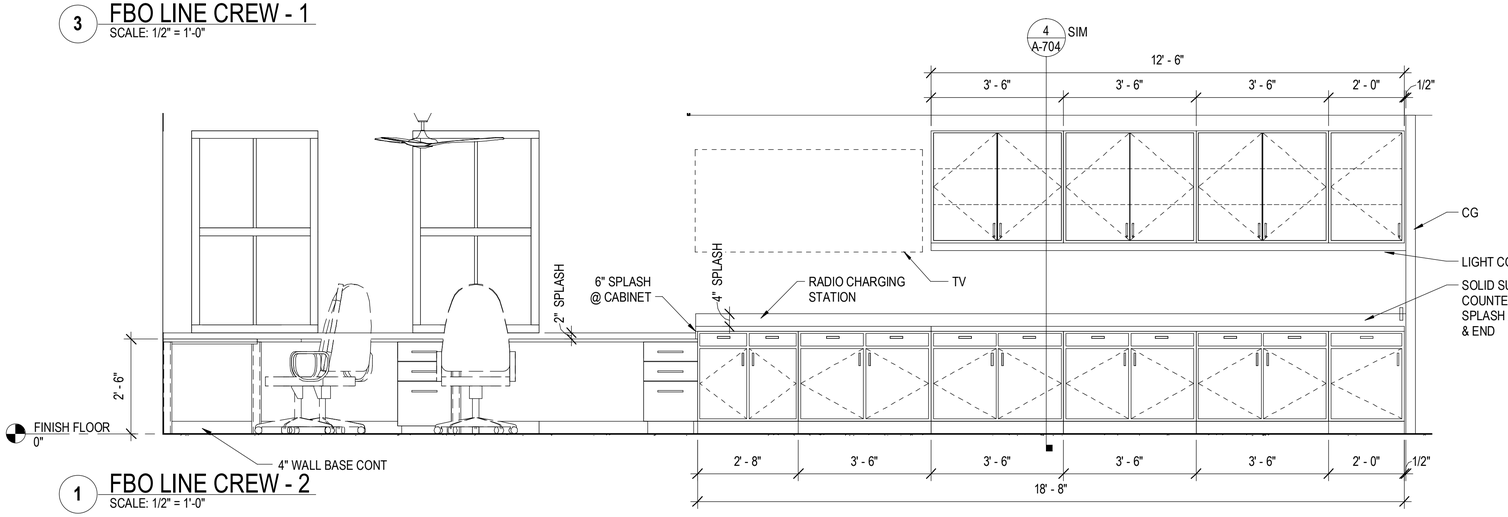

1 FBO LINE CREW - 2
SCALE: 1/2" = 1'-0"

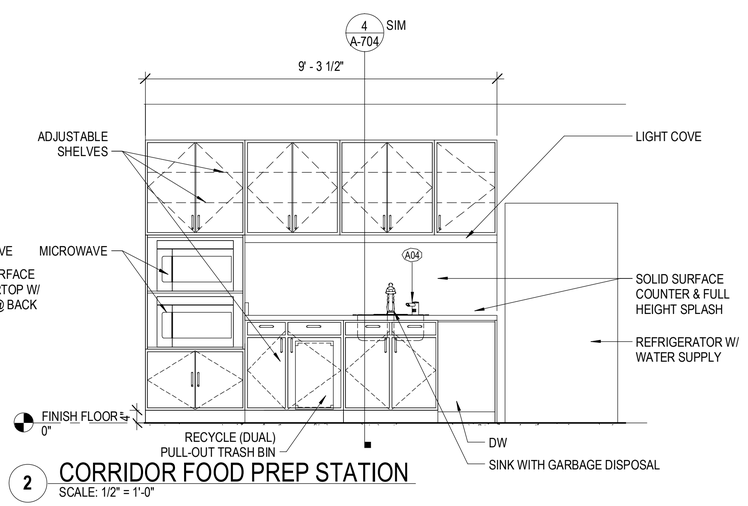

2 CORRIDOR FOOD PREP STATION
SCALE: 1/2" = 1'-0"

FOR PERMIT & BIDDING ONLY

AVCON
TRANSFORMING TODAY'S IDEAS INTO TOMORROW'S REALITY

WILLIAM A. HAYWARD JR.
FL LICENSE NO.:AR0011007

NO.	DATE	REVISION	BY
		um No. 1	

INTERIOR ELEVATIONS

100% DESIGN DRAWINGS

AIRPORT TERMINAL AND HANGAR DEVELOPMENT

PREPARED FOR

DEFUNIAK SPRINGS MUNICIPAL AIRPORT

DESIGNED BY:	Designer
DRAWN BY:	Author
CHECKED BY:	Checker
APPROVED BY:	Approver
PROJECT NO:	176232
DATE:	11/1/2021

SHEET NUMBER

A-404

THIS DOCUMENT CONTAINS PRIVILEGED AND PROPRIETARY INFORMATION, ALL OF WHICH IS EXPRESSLY PROVIDED BY AVCON, INC., FOR USE BY THE INTENDED RECIPIENT, AND FOR A SPECIFIC PURPOSE. WITHOUT THE EXPRESS WRITTEN CONSENT OF AVCON, INC. ANY DISTRIBUTION, REPRODUCTION, OR OTHER USE OF THIS DOCUMENT, IN WHOLE OR IN PART, IS STRICTLY PROHIBITED.

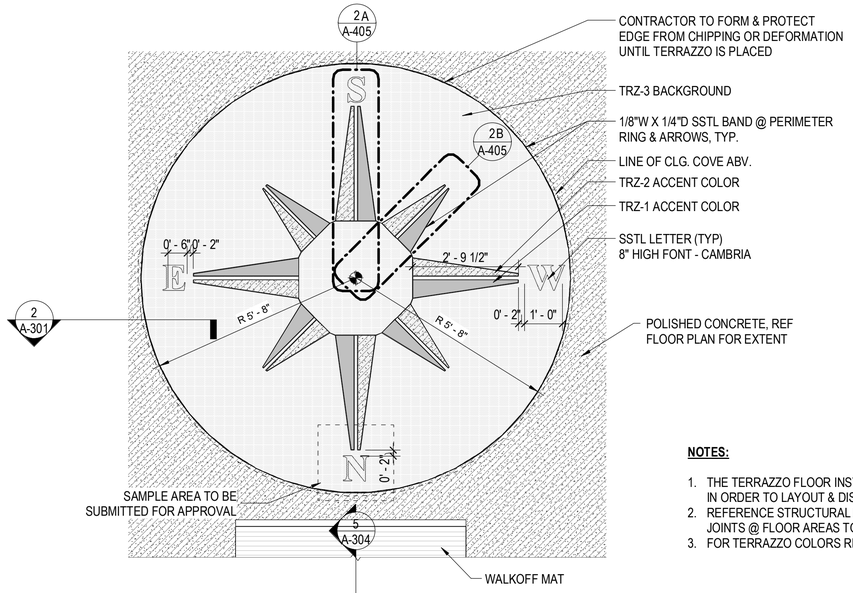

1 LOBBY TERRAZZO DETAIL INSERT PLAN
SCALE: 1/2" = 1'-0"

NOTES:

1. THE TERRAZZO FLOOR INSTALLER SHALL WORK WITH THE ARCHITECT, IN THE FIELD, IN ORDER TO LAYOUT & DISTRIBUTE THE COLOR CHIPS.
2. REFERENCE STRUCTURAL DWG'S & SPECIFICATIONS FOR SAW CUT CONTROL JOINTS @ FLOOR AREAS TO RECEIVE POLISHED CONC. FINISH.
3. FOR TERRAZZO COLORS REFER TO A-142 FINISH LEGEND SCHEDULE.

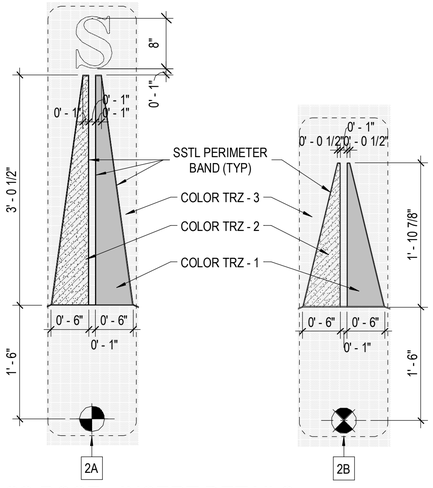

2 COMPASS ROSE - INSERT DETAILS
SCALE: 1" = 1'-0"

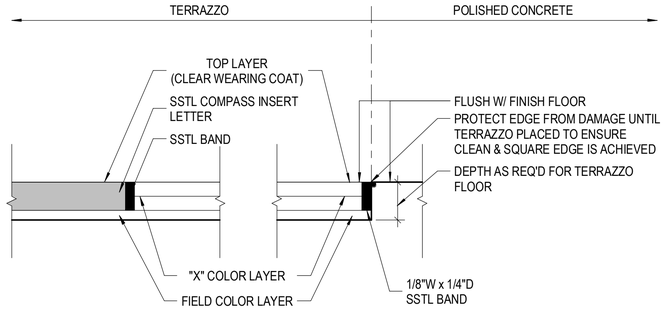

3 LOBBY TERRAZZO INSERT SECTION
SCALE: 12" = 1'-0"

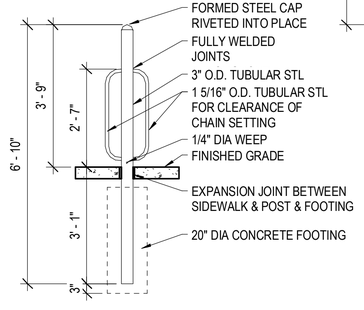

7 BIKE RACK
SCALE: 1/2" = 1'-0"

NOTES:
1. TUBING - 3" DIA X .154" WALL STEEL TUBING

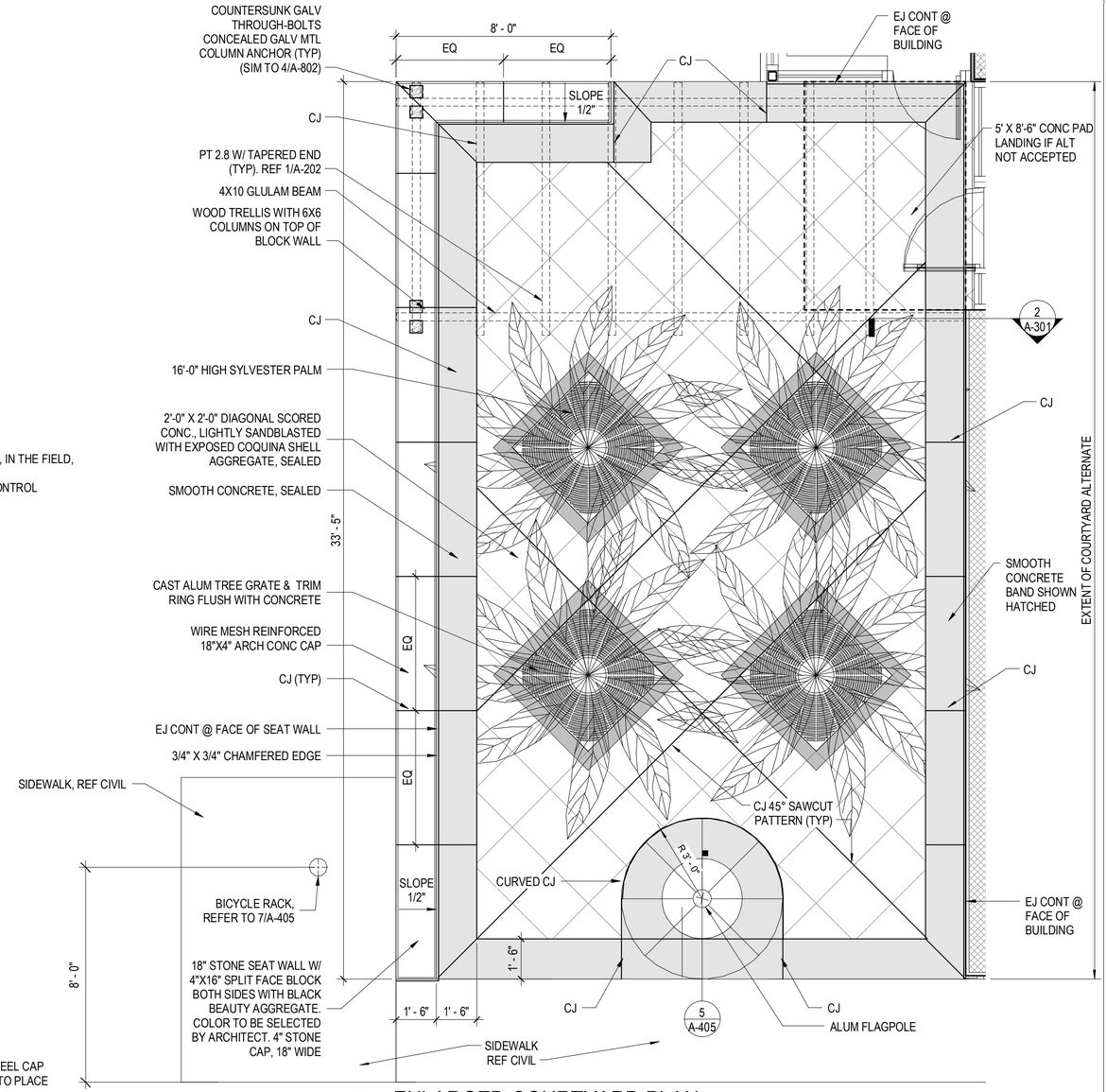

4 ENLARGED COURTYARD PLAN
SCALE: 3/8" = 1'-0"

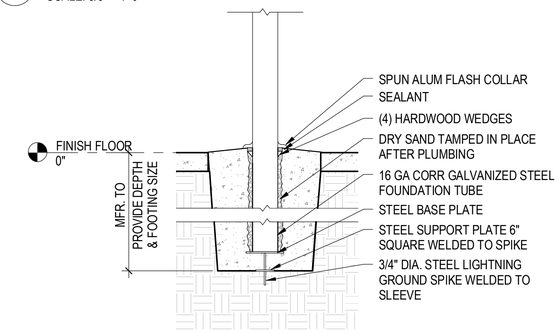

5 FLAGPOLE BASE DETAIL
SCALE: 1/2" = 1'-0"

FOR PERMIT & BIDDING ONLY

AVCON
TRANSFORMING TODAY'S IDEAS INTO TOMORROW'S REALITY

WILLIAM A. HAYWARD JR.
FL LICENSE NO.:AR0011007

NO.	DATE	REVISION	BY

ENLARGED PLANS

100% DESIGN DRAWINGS

AIRPORT TERMINAL AND HANGAR DEVELOPMENT

PREPARED FOR
DEFUNIAK SPRINGS MUNICIPAL AIRPORT

DESIGNED BY:	CH
DRAWN BY:	JP
CHECKED BY:	DT
APPROVED BY:	WAH
PROJECT NO:	176232
DATE:	11/1/2021

SHEET NUMBER
A-405

THIS DOCUMENT CONTAINS PRIVILEGED AND PROPRIETARY INFORMATION, ALL OF WHICH IS EXPRESSLY PROVIDED BY AVCON, INC., FOR USE BY THE INTENDED RECIPIENT, AND FOR A SPECIFIC PURPOSE, WITHOUT THE EXPRESS WRITTEN CONSENT OF AVCON, INC., ANY DISTRIBUTION, REPRODUCTION, OR OTHER USE OF THIS DOCUMENT, IN WHOLE OR IN PART, IS STRICTLY PROHIBITED.

GENERAL NOTES:

1. ALL HARDWARE & METAL COMPONENTS SHALL BE PAINTED BLACK.
2. ALL THROUGH BOLTS SHALL BE RECESSED AND FLUSH WITH THE FACE OF THE COLUMN OR BEAM.
3. ALL PLATES SHALL BE RECESSED INTO COLUMN OR BEAM WHERE NOTED OR SHOWN.

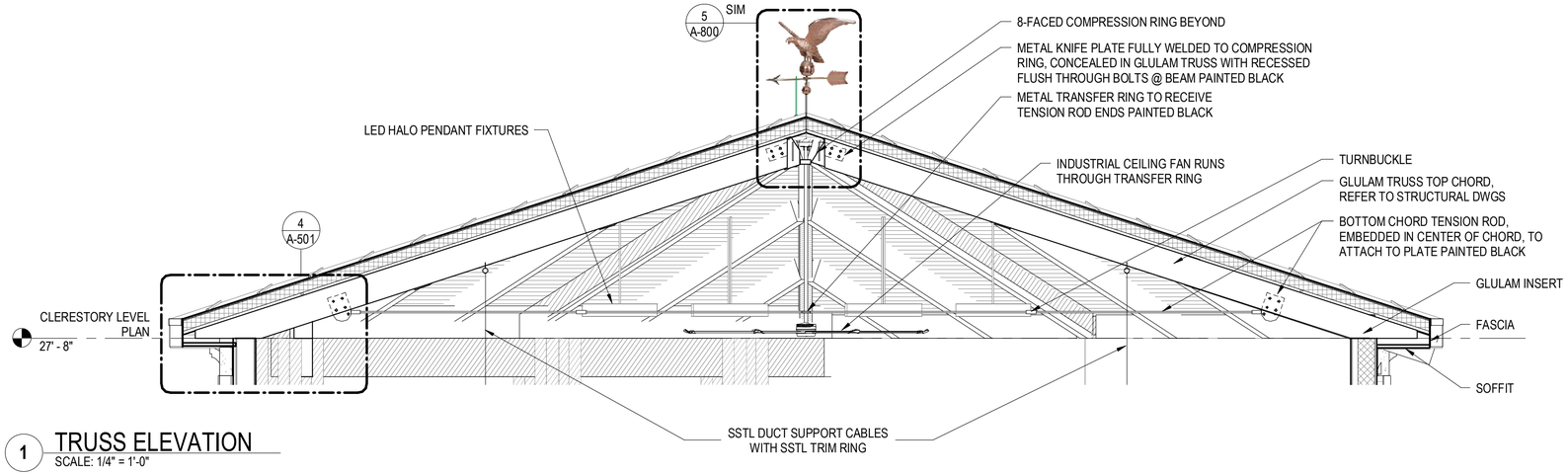

1 TRUSS ELEVATION
SCALE: 1/4" = 1'-0"

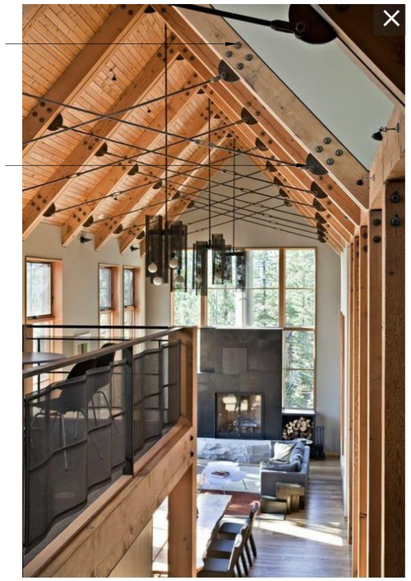

CONCEALED CABLE ANCHOR EXAMPLE
N.T.S.

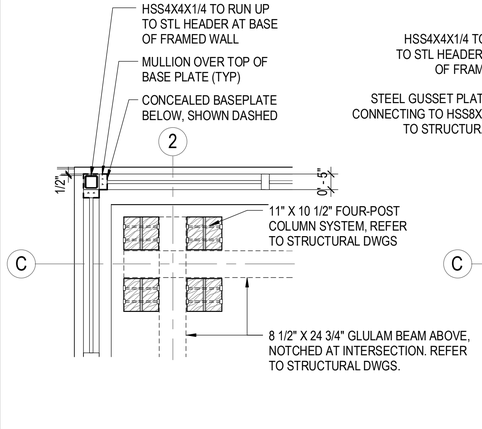

2 4-POST COLUMN PLAN DETAIL
SCALE: 1/2" = 1'-0"

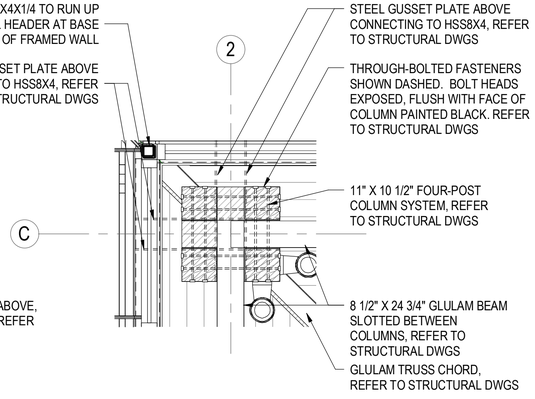

3 4-POST COLUMN BEAM DETAIL
SCALE: 1/2" = 1'-0"

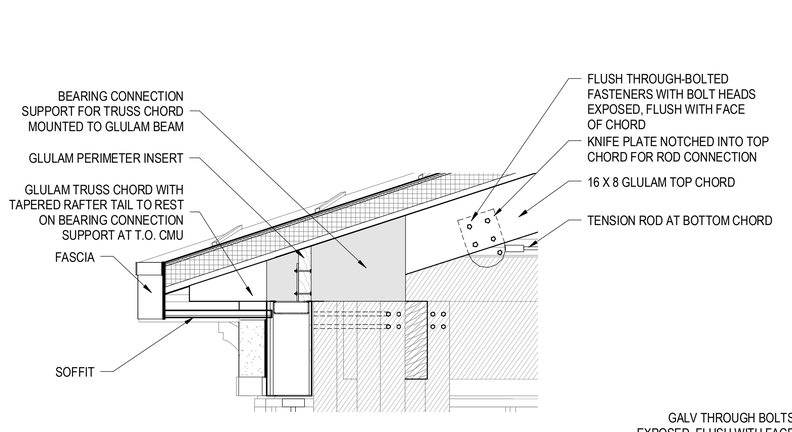

4 TRUSS DETAIL AT CORNER CONDITION
SCALE: 1/2" = 1'-0"



CONCEALED COLUMN ANCHOR PLATE EXAMPLE
N.T.S.

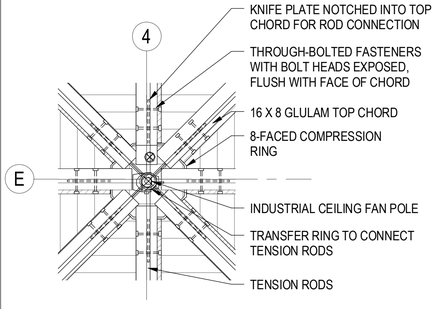

5 GLULAM TRUSS INTERSECTION
SCALE: 1/2" = 1'-0"

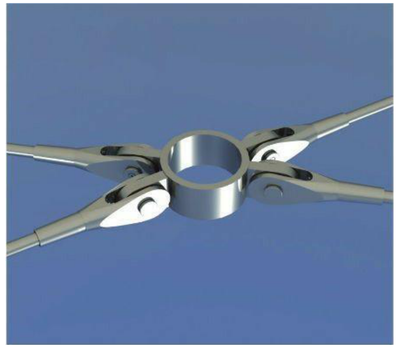

6 TRANSFER RING @ FAN INTERSECTION
SCALE: 12" = 1'-0"



7 FABRIC DUCT EXAMPLE
SCALE: 12" = 1'-0"

0 2' - 0" 4' - 0" 8' - 0"
SCALE: 1/4" = 1' - 0"

0 1' - 0" 2' - 0" 4' - 0"
SCALE: 1/2" = 1' - 0"

FOR PERMIT & BIDDING ONLY

AVCON
TRANSFORMING TODAY'S IDEAS INTO TOMORROW'S REALITY

WILLIAM A. HAYWARD JR.
FL LICENSE NO.:AR0011007

NO.	DATE	REVISION	BY

GLULAM ASSEMBLIES

100% DESIGN DRAWINGS

AIRPORT TERMINAL AND HANGAR DEVELOPMENT

PREPARED FOR
DEFUNIAK SPRINGS MUNICIPAL AIRPORT

DESIGNED BY:	CH
DRAWN BY:	MW
CHECKED BY:	DT
APPROVED BY:	WAH
PROJECT NO:	176232
DATE:	11/1/2021

SHEET NUMBER
A-501

THIS DOCUMENT CONTAINS PRIVILEGED AND PROPRIETARY INFORMATION, ALL OF WHICH IS EXPRESSLY PROVIDED BY AVCON, INC., FOR USE BY THE INTENDED RECIPIENT, AND FOR A SPECIFIC PURPOSE WITHOUT THE EXPRESS WRITTEN CONSENT OF AVCON, INC. ANY DISTRIBUTION, REPRODUCTION, OR OTHER USE OF THIS DOCUMENT, IN WHOLE OR IN PART, IS STRICTLY PROHIBITED.

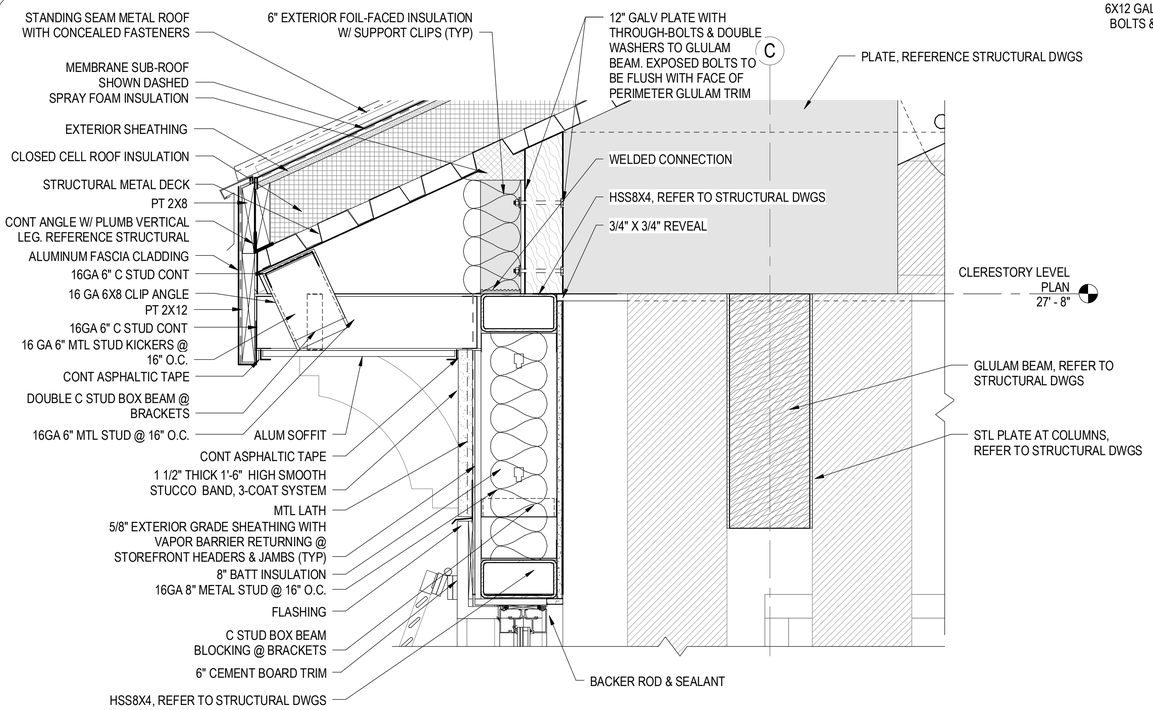

1 CLERESTORY EAVE DETAIL @ MTL STUD
SCALE: 1 1/2" = 1'-0"

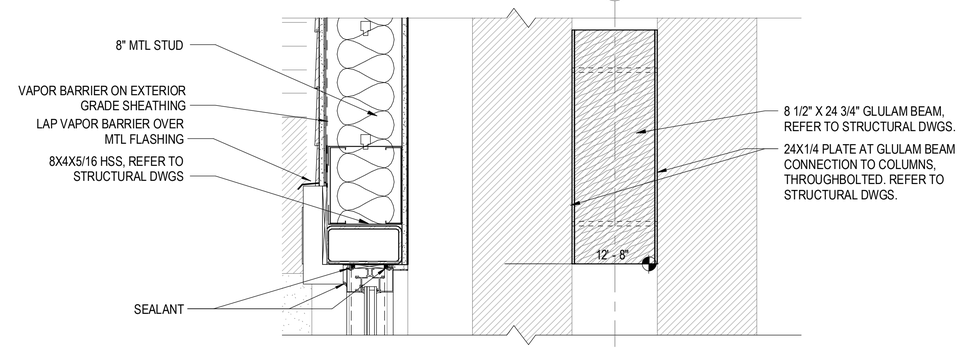

2 STOREFRONT HEADER CONNECTION TO INTERMEDIATE GLULAM BEAM
SCALE: 1 1/2" = 1'-0"

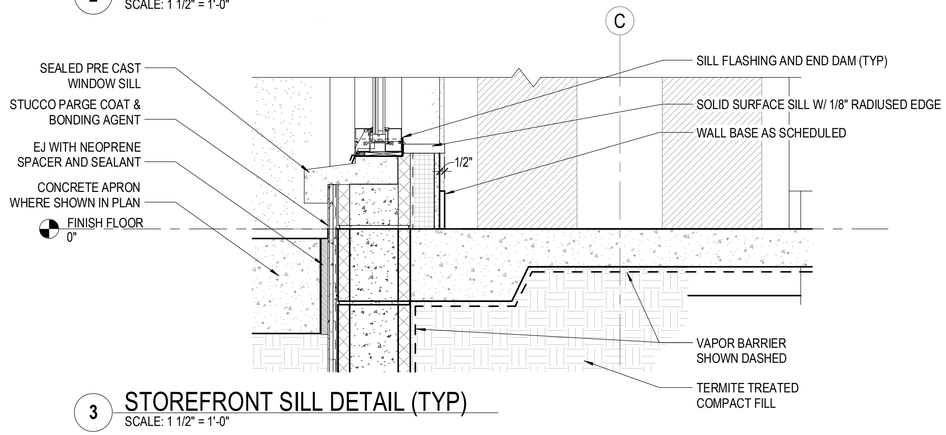

3 STOREFRONT SILL DETAIL (TYP)
SCALE: 1 1/2" = 1'-0"

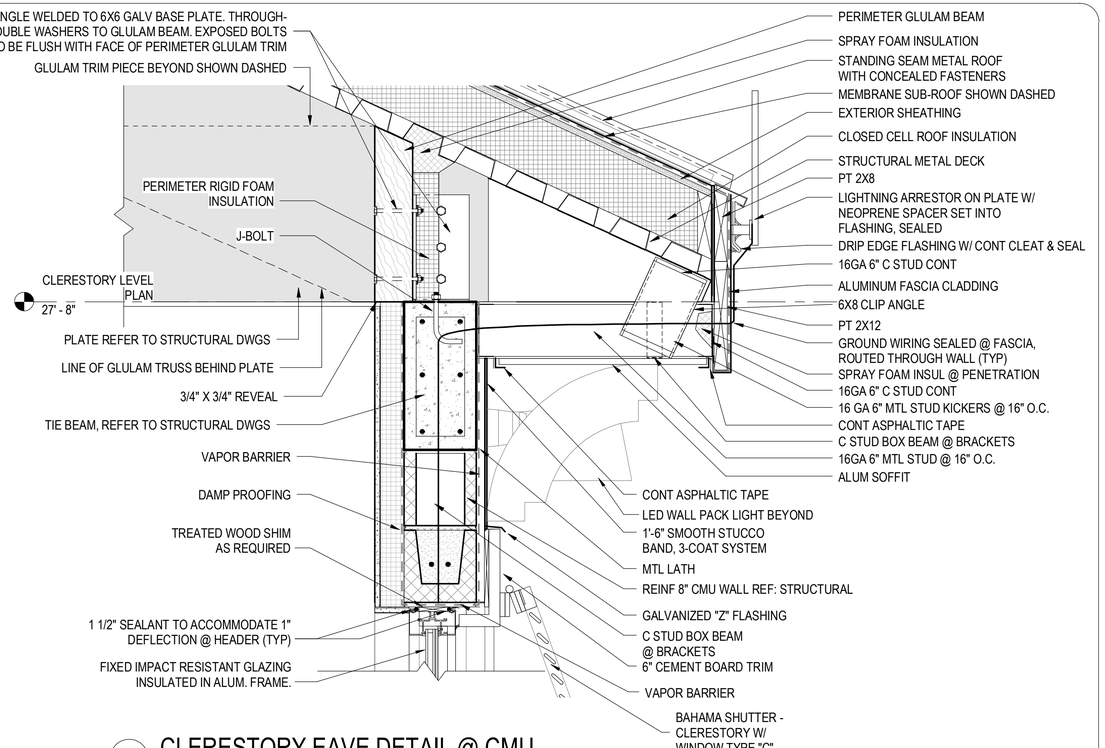

4 CLERESTORY EAVE DETAIL @ CMU
SCALE: 1 1/2" = 1'-0"

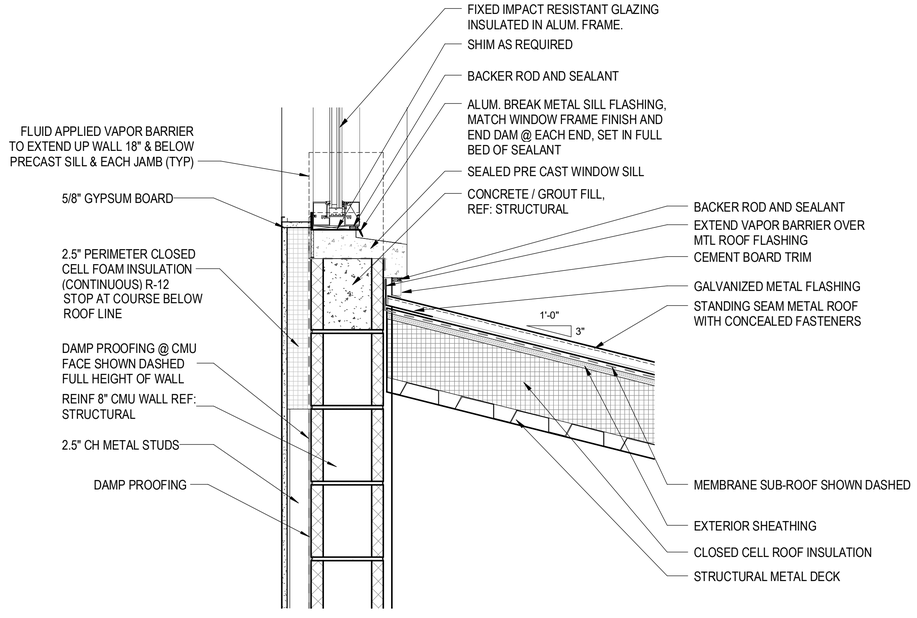

5 CLERESTORY SILL DETAIL @ SOUTH
SCALE: 1 1/2" = 1'-0"

FOR PERMIT & BIDDING ONLY

AVCON
TRANSFORMING TODAY'S IDEAS INTO TOMORROW'S REALITY

WILLIAM A. HAYWARD JR.
FL LICENSE NO.:AR0011007

NO.	DATE	REVISION	BY

DETAIL SECTION VIEWS

100% DESIGN DRAWINGS

AIRPORT TERMINAL AND HANGAR DEVELOPMENT

PREPARED FOR

DEFUNIAK SPRINGS MUNICIPAL AIRPORT

DESIGNED BY:	CH
DRAWN BY:	DN
CHECKED BY:	DT
APPROVED BY:	WAH
PROJECT NO:	176232
DATE:	11/1/2021

SHEET NUMBER

A-502

THIS DOCUMENT CONTAINS PRIVILEGED AND PROPRIETARY INFORMATION, ALL OF WHICH IS EXPRESSLY PROVIDED BY AVCON, INC., FOR USE BY THE INTENDED RECIPIENT, AND FOR A SPECIFIC PURPOSE, WITHOUT THE EXPRESS WRITTEN CONSENT OF AVCON, INC. ANY DISTRIBUTION, REPRODUCTION, OR OTHER USE OF THIS DOCUMENT, IN WHOLE OR IN PART, IS STRICTLY PROHIBITED.

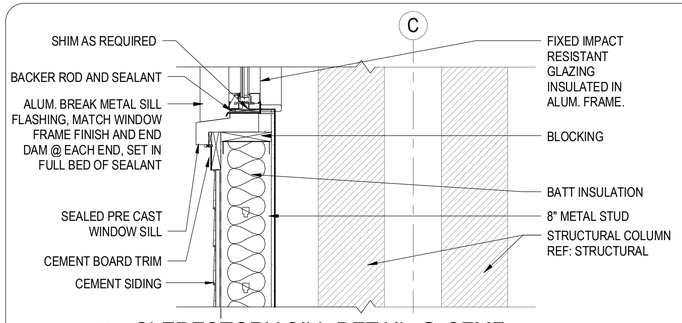

4 CLERESTORY SILL DETAIL @ CFMF
SCALE: 1" = 1'-0"

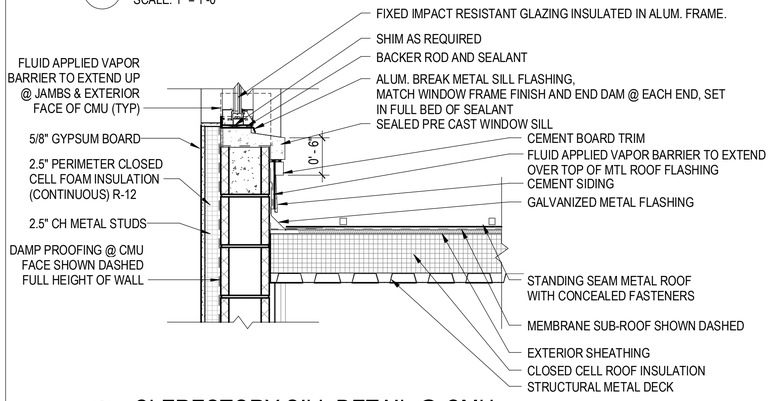

3 CLERESTORY SILL DETAIL @ CMU
SCALE: 1" = 1'-0"

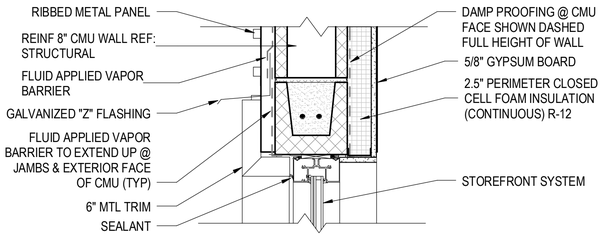

2 STOREFRONT HEAD DETAIL @ METAL PANEL
SCALE: 1 1/2" = 1'-0"

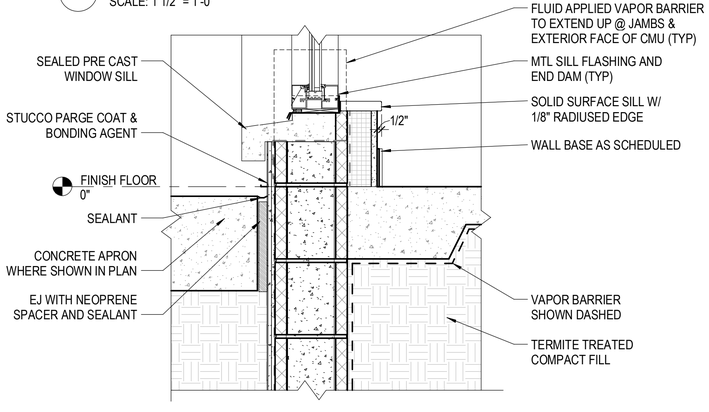

1 STOREFRONT SILL DETAIL @ METAL PANEL
SCALE: 1 1/2" = 1'-0"

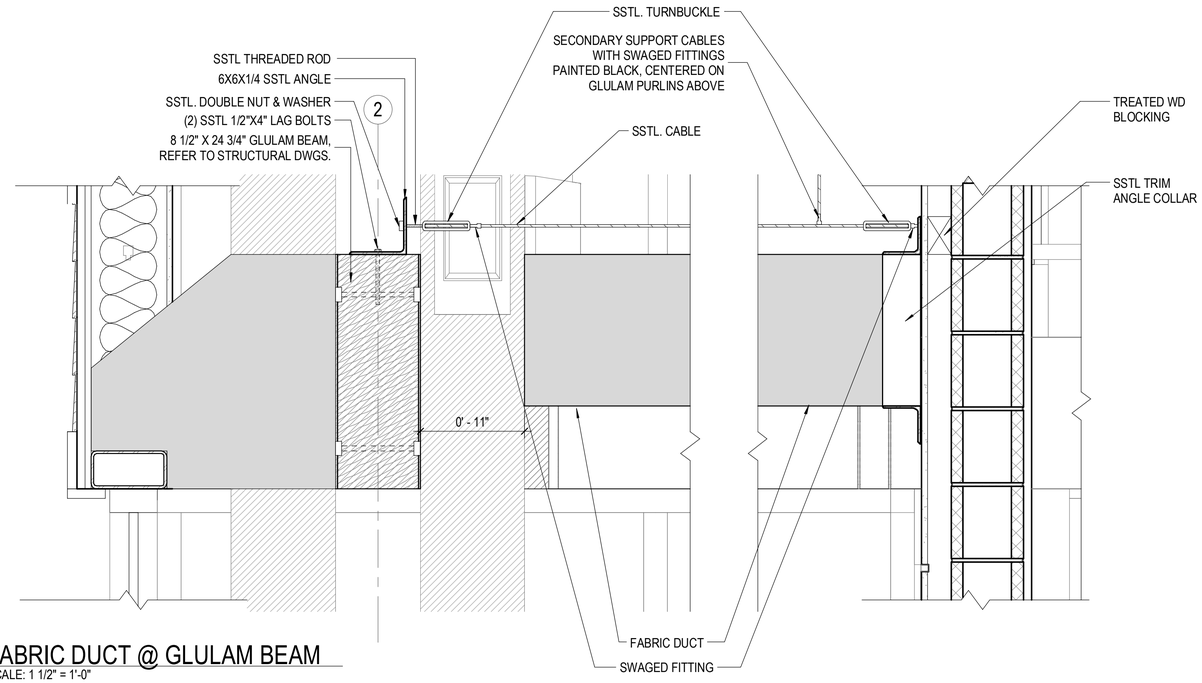

5 FABRIC DUCT @ GLULAM BEAM
SCALE: 1 1/2" = 1'-0"

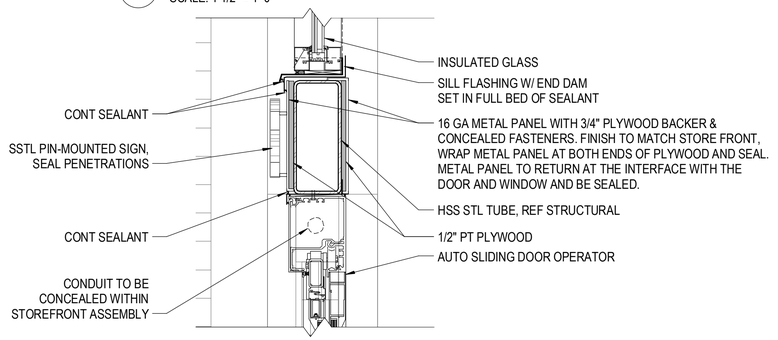

6 SLIDING DOOR HEADER DETAIL
SCALE: 1 1/2" = 1'-0"

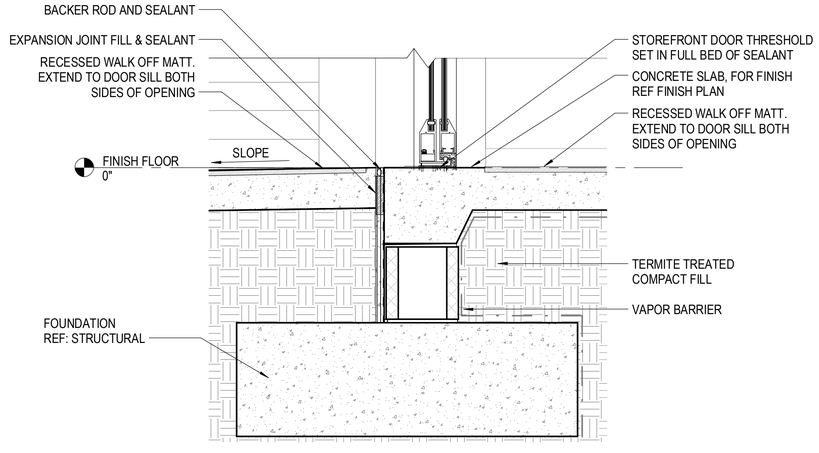

7 SLIDING DOOR BASE DETAIL
SCALE: 1 1/2" = 1'-0"

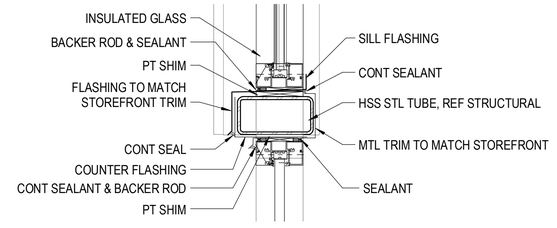

8 STACKED STOREFRONT SUPPORT
SCALE: 1 1/2" = 1'-0"

0 2' - 0" 4' - 0" 8' - 0"

SCALE: 1/4" = 1' - 0"

FOR PERMIT & BIDDING ONLY

AVCON
TRANSFORMING TODAY'S IDEAS INTO TOMORROW'S REALITY

WILLIAM A. HAYWARD JR.
FL LICENSE NO.:AR0011007

NO.	DATE	REVISION	BY

DETAIL SECTION VIEWS

100% DESIGN DRAWINGS

AIRPORT TERMINAL AND HANGAR DEVELOPMENT

PREPARED FOR

DEFUNIAK SPRINGS MUNICIPAL AIRPORT

DESIGNED BY:	CH
DRAWN BY:	-
CHECKED BY:	DT
APPROVED BY:	WAH
PROJECT NO:	176232
DATE:	11/1/2021

SHEET NUMBER

A-503

THIS DOCUMENT CONTAINS PRIVILEGED AND PROPRIETARY INFORMATION, ALL OF WHICH IS EXPRESSLY PROVIDED BY AVCON, INC., FOR USE BY THE INTENDED RECIPIENT, AND FOR A SPECIFIC PURPOSE, WITHOUT THE EXPRESS WRITTEN CONSENT OF AVCON, INC. ANY DISTRIBUTION, REPRODUCTION, OR OTHER USE OF THIS DOCUMENT, IN WHOLE OR IN PART, IS STRICTLY PROHIBITED.

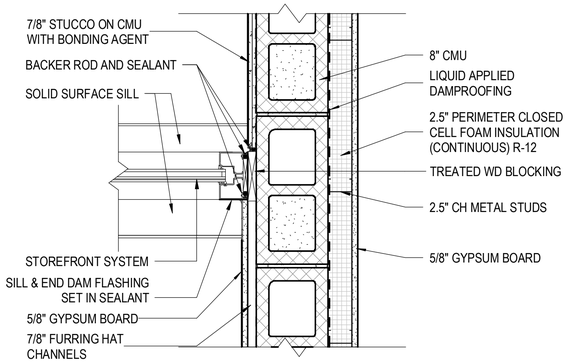

3 STOREFRONT JAMB @ STUCCO
SCALE: 1 1/2" = 1'-0"

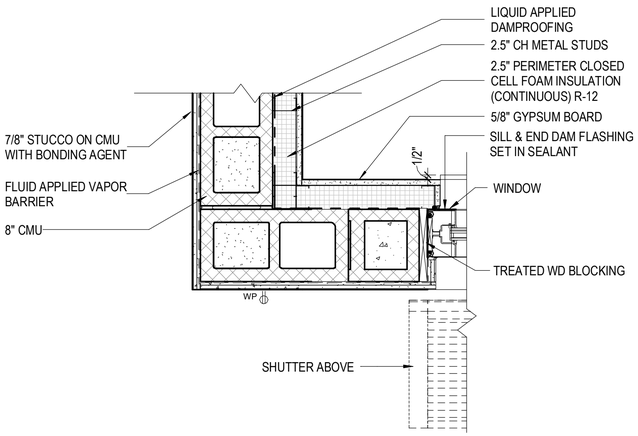

2 CORNER DETAIL AT STUCCO
SCALE: 1 1/2" = 1'-0"

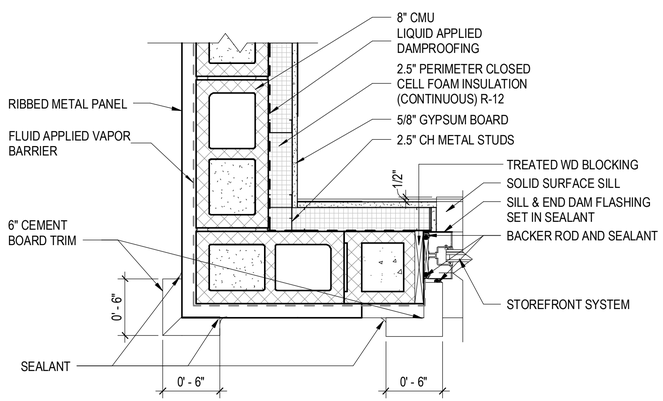

1 STOREFRONT JAMB DETAIL @ METAL PANEL
SCALE: 1 1/2" = 1'-0"

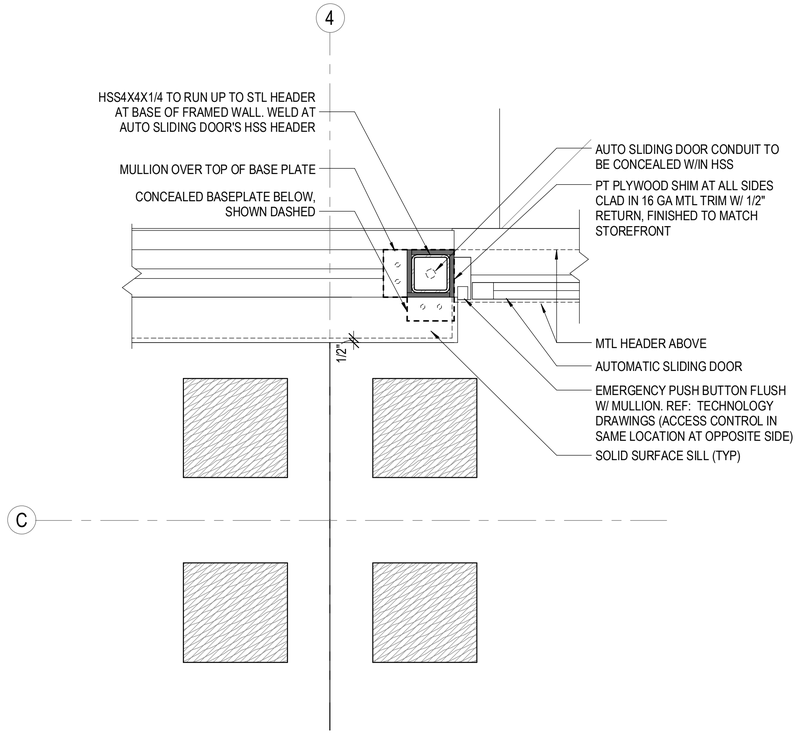

4 AIRSIDE SLIDING DOOR JAMB DETAIL
SCALE: 1 1/2" = 1'-0"

FOR PERMIT & BIDDING ONLY

AVCON
TRANSFORMING TODAY'S IDEAS INTO TOMORROW'S REALITY

WILLIAM A. HAYWARD JR.
FL LICENSE NO.:AR0011007

NO.	DATE	REVISION	BY

PLAN DETAILS

100% DESIGN DRAWINGS

AIRPORT TERMINAL AND HANGAR DEVELOPMENT

PREPARED FOR

DEFUNIAK SPRINGS MUNICIPAL AIRPORT

DESIGNED BY:	Designer
DRAWN BY:	Author
CHECKED BY:	Checker
APPROVED BY:	WAH
PROJECT NO:	176232
DATE:	11/1/2021

SHEET NUMBER

A-504

THIS DOCUMENT CONTAINS PRIVILEGED AND PROPRIETARY INFORMATION, ALL OF WHICH IS EXPRESSLY PROVIDED BY AVCON, INC., FOR USE BY THE INTENDED RECIPIENT, AND FOR A SPECIFIC PURPOSE. IN WHOLE OR IN PART, IS STRICTLY PROHIBITED.

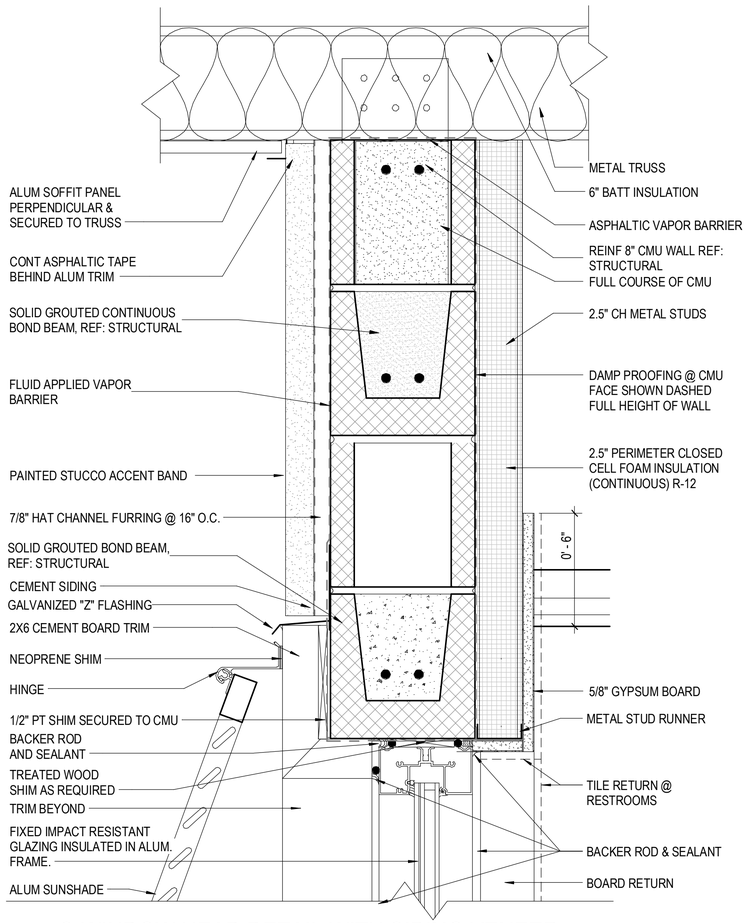

4 C-WINDOW HEAD DETAIL WITH SIDING VENEER

SCALE: 3" = 1'-0"

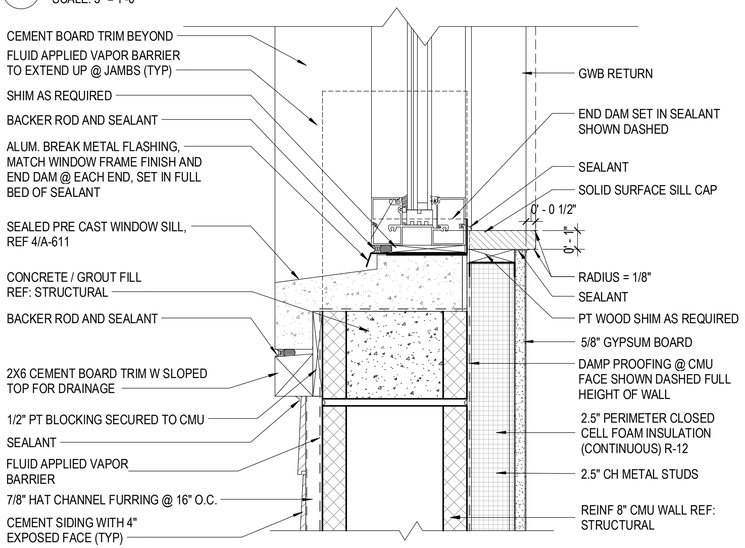

5 C-WINDOW SILL DETAIL WITH SIDING VENEER

SCALE: 3" = 1'-0"

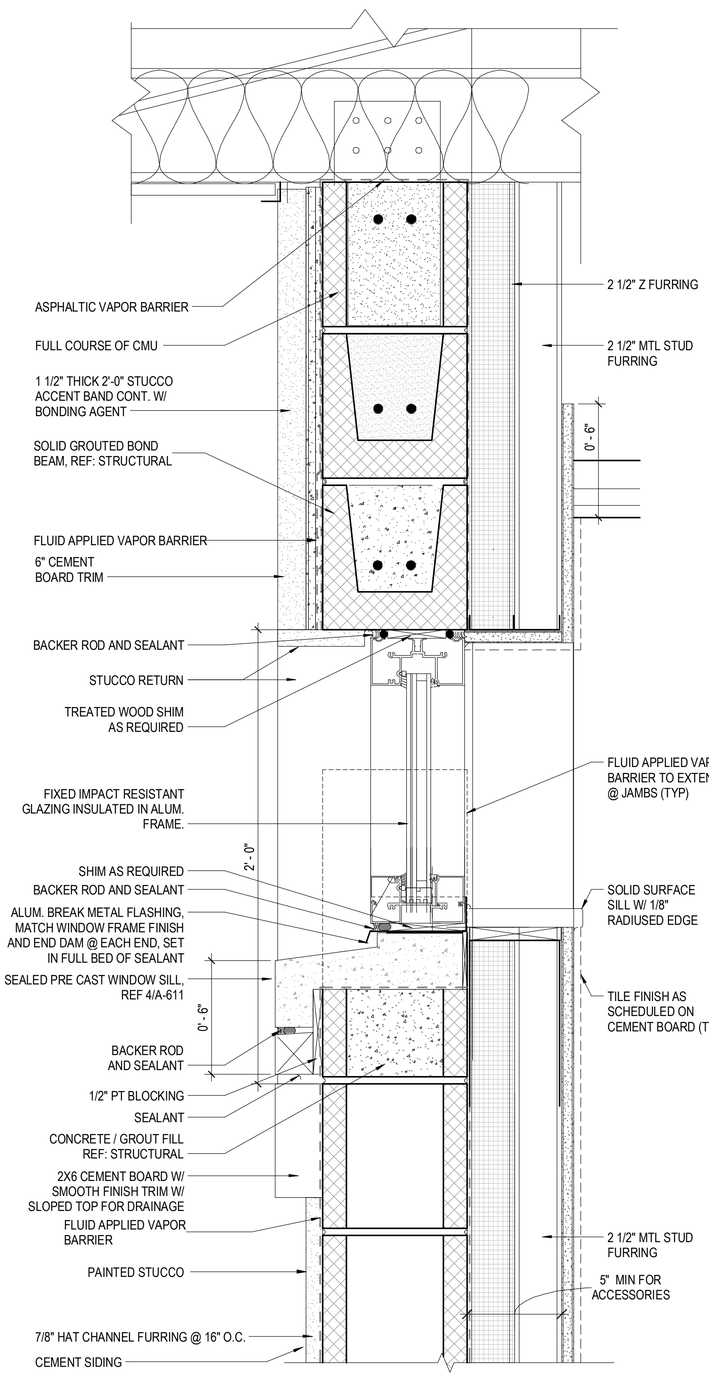

3 B-WINDOW HEAD/SILL DETAIL @ RR CLERESTORY

SCALE: 3" = 1'-0"

REFER TO DETAILS 1,2, 4 & 5 THIS SHEET FOR BALANCE NOTES AND DIMENSIONS

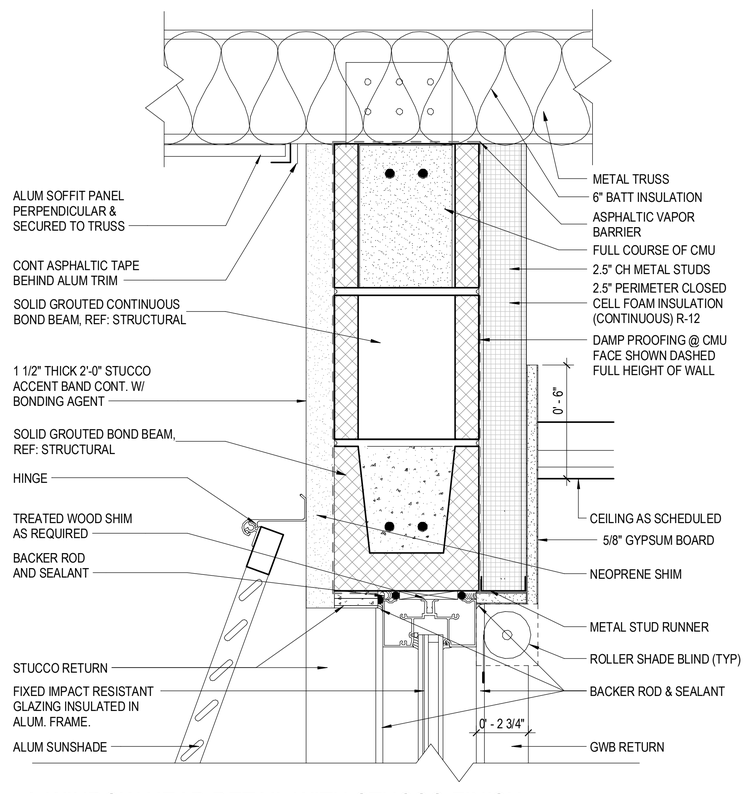

1 A-WINDOW HEAD DETAIL WITH STUCCO FINISH

SCALE: 3" = 1'-0"

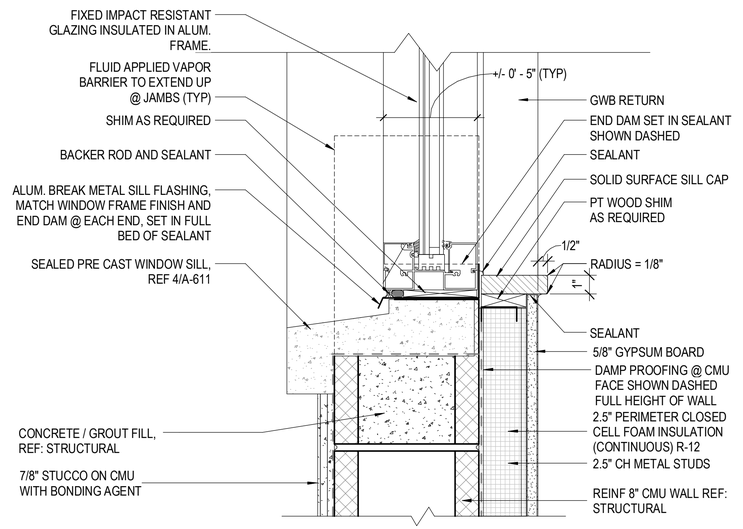

2 A-WINDOW SILL DETAIL WITH STUCCO FINISH

SCALE: 3" = 1'-0"

FOR PERMIT & BIDDING ONLY

AVCON

TRANSFORMING TODAY'S IDEAS INTO TOMORROW'S REALITY

WILLIAM A. HAYWARD JR.
FL LICENSE NO.:AR0011007

NO.	DATE	REVISION	BY

WINDOW DETAILS

100% DESIGN DRAWINGS

AIRPORT TERMINAL AND HANGAR DEVELOPMENT

PREPARED FOR

DEFUNIAK SPRINGS MUNICIPAL AIRPORT

DESIGNED BY:	CH
DRAWN BY:	-
CHECKED BY:	DT
APPROVED BY:	WAH
PROJECT NO:	176232
DATE:	11/1/2021

SHEET NUMBER

A-505

THIS DOCUMENT CONTAINS PRIVILEGED AND PROPRIETARY INFORMATION, ALL OF WHICH IS EXPRESSLY PROVIDED BY AVCON, INC., FOR USE BY THE INTENDED RECIPIENT, AND FOR A SPECIFIC PURPOSE. WITHOUT THE EXPRESS WRITTEN CONSENT OF AVCON, INC. ANY DISTRIBUTION, REPRODUCTION, OR OTHER USE OF THIS DOCUMENT, IN WHOLE OR IN PART, IS STRICTLY PROHIBITED.

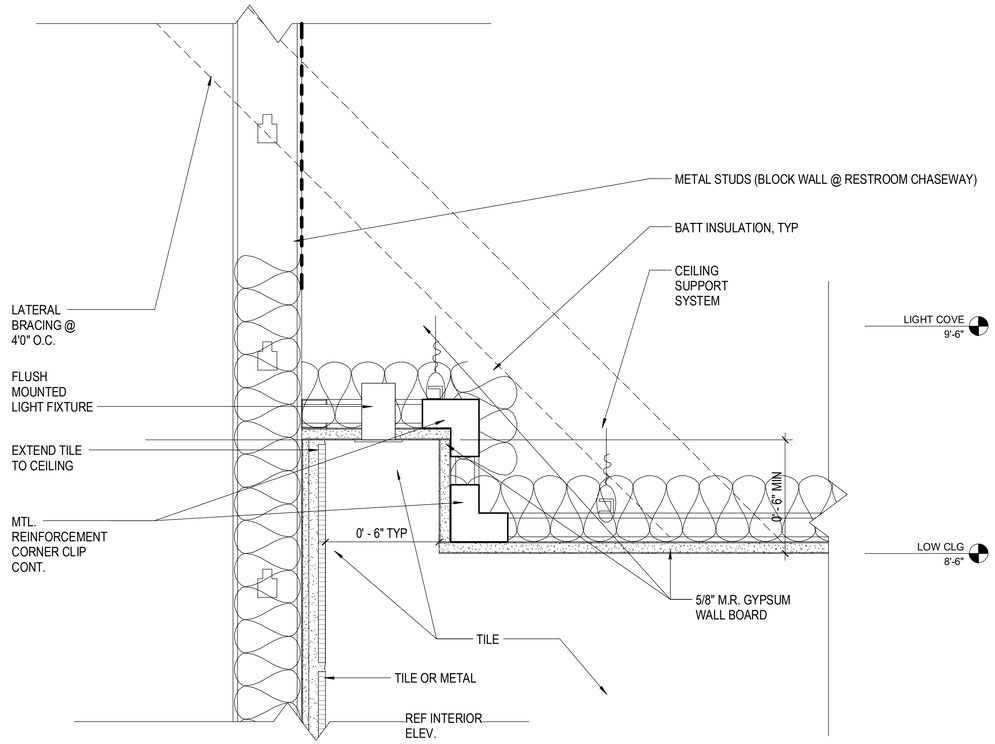

3 LIGHT COVE DETAIL
SCALE: 3" = 1'-0"

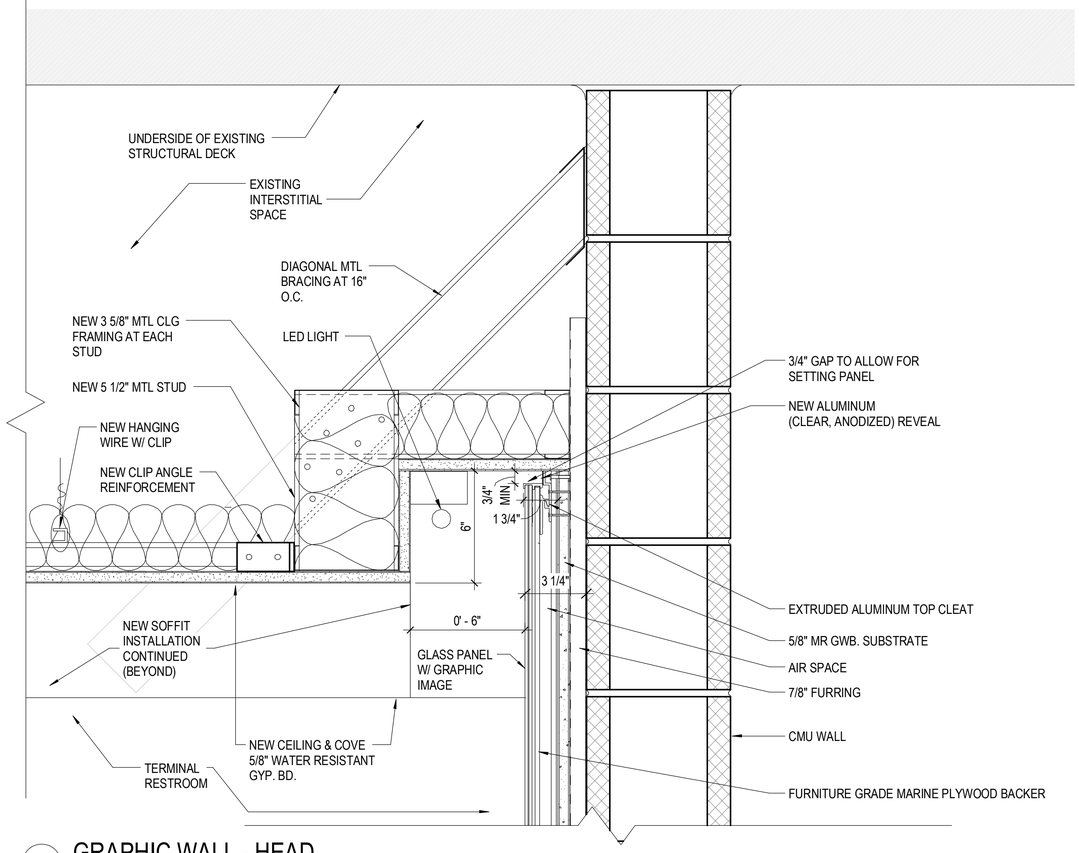

1 GRAPHIC WALL - HEAD
SCALE: 3" = 1'-0"

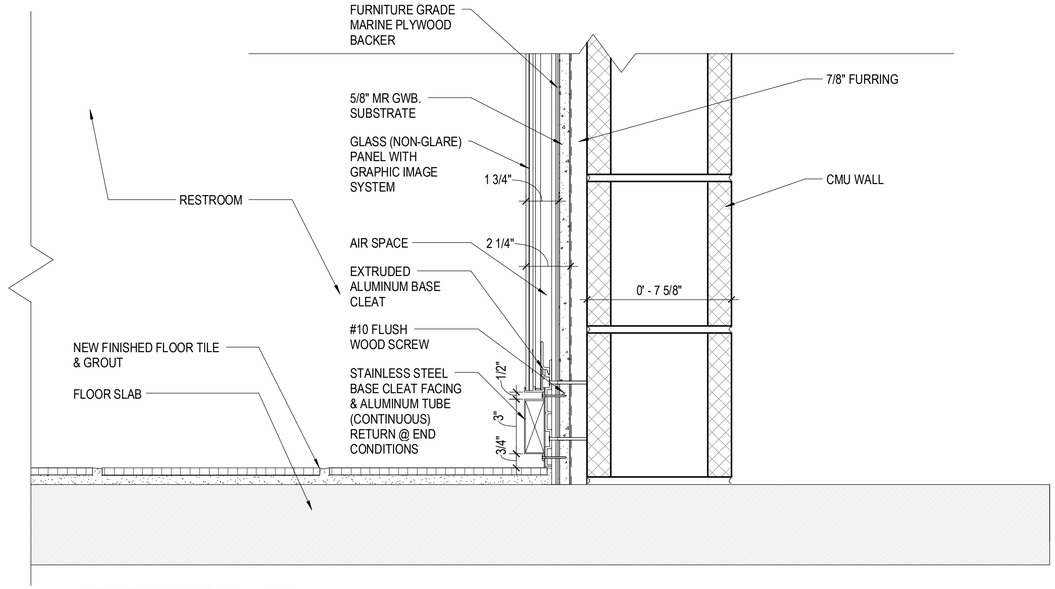

2 GRAPHIC WALL - SILL
SCALE: 3" = 1'-0"

FOR PERMIT & BIDDING ONLY

AVCON
TRANSFORMING TODAY'S IDEAS INTO TOMORROW'S REALITY

WILLIAM A. HAYWARD JR.
FL LICENSE NO.:AR0011007

NO.	DATE	REVISION	BY

DETAILS

100% DESIGN DRAWINGS

AIRPORT TERMINAL AND HANGAR DEVELOPMENT

PREPARED FOR
DEFUNIAK SPRINGS MUNICIPAL AIRPORT

DESIGNED BY:	CH
DRAWN BY:	Author
CHECKED BY:	DT
APPROVED BY:	WAH
PROJECT NO:	176232
DATE:	11/1/2021

SHEET NUMBER

A-506

THIS DOCUMENT CONTAINS PRIVILEGED AND PROPRIETARY INFORMATION, ALL OF WHICH IS EXPRESSLY PROVIDED BY AVCON, INC., FOR USE BY THE INTENDED RECIPIENT, AND FOR A SPECIFIC PURPOSE. WITHOUT THE EXPRESS WRITTEN CONSENT OF AVCON, INC. ANY DISTRIBUTION, REPRODUCTION, OR OTHER USE OF THIS DOCUMENT, IN WHOLE OR IN PART, IS STRICTLY PROHIBITED.

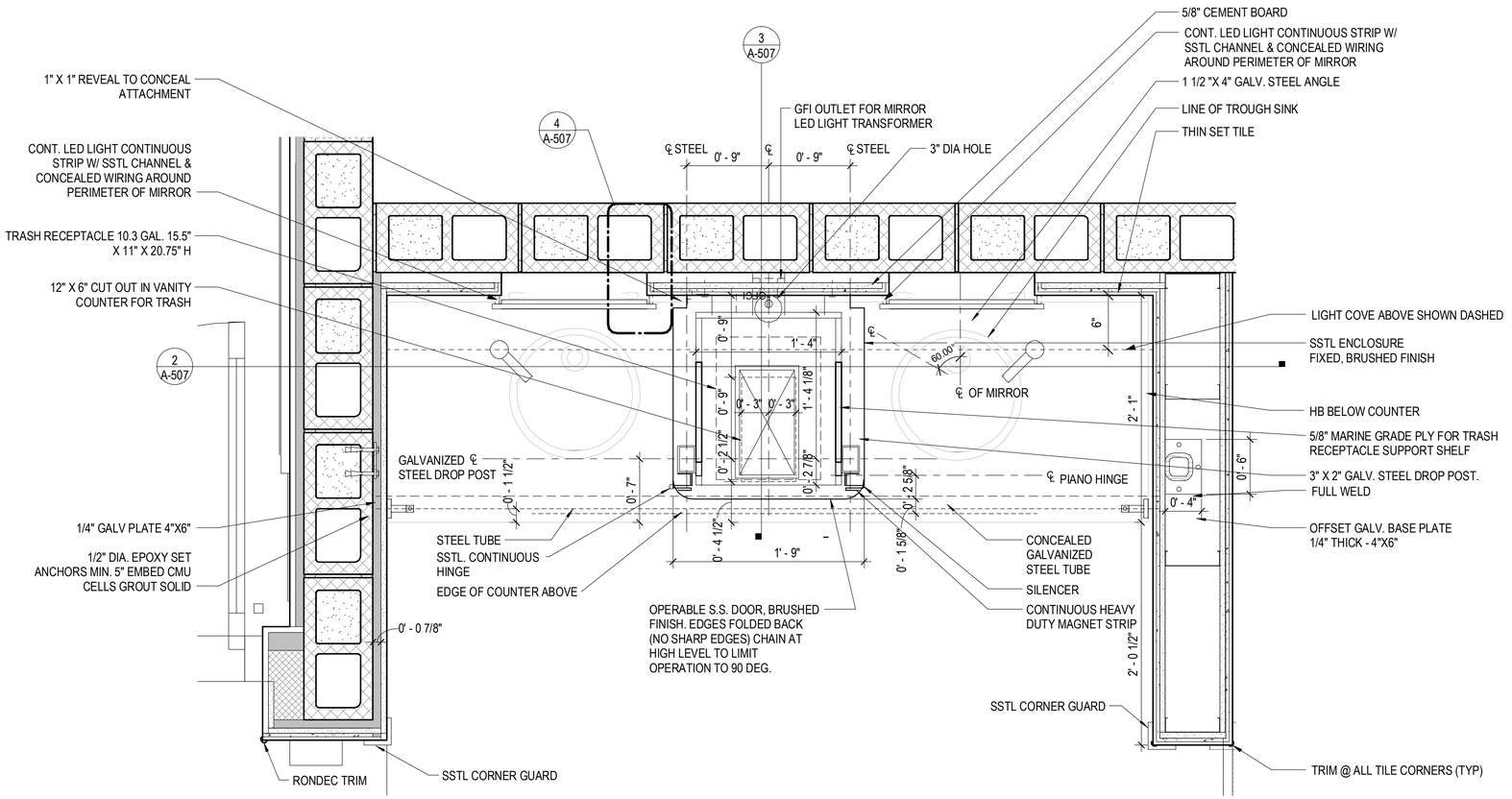

4 PLAN DETAIL - LED LIGHT MIRROR

SCALE: 3" = 1'-0"

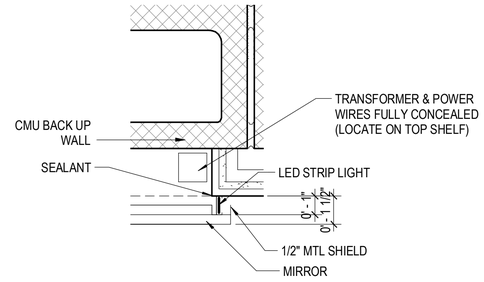

1 PLAN DETAIL - TRASH RECEPTACLE BENEATH RESTROOM COUNTER

SCALE: 1 1/2" = 1'-0"

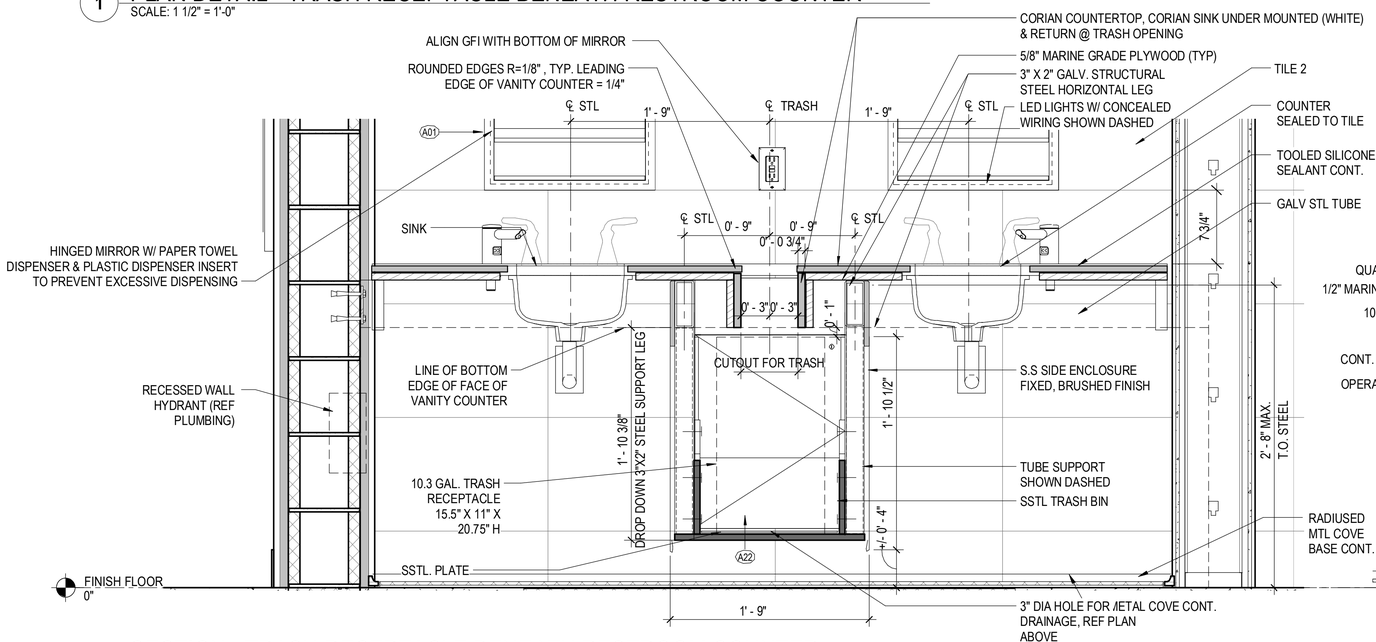

2 SECTION - TRASH RECEPTACLE BENEATH RESTROOM COUNTER

SCALE: 1 1/2" = 1'-0"

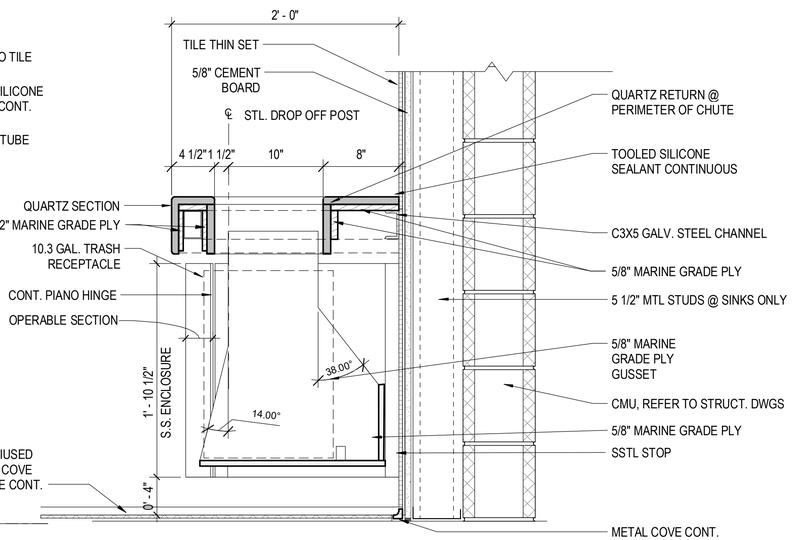

3 SECTION DETAIL - TRASH RECEPTACLE BENEATH RESTROOM COUNTER

SCALE: 1 1/2" = 1'-0"

FOR PERMIT & BIDDING ONLY

AVCON

TRANSFORMING TODAY'S IDEAS INTO TOMORROW'S REALITY

THIS DOCUMENT CONTAINS PRIVILEGED AND PROPRIETARY INFORMATION, ALL OF WHICH IS EXPRESSLY PROVIDED BY AVCON, INC., FOR USE BY THE INTENDED RECIPIENT, AND FOR A SPECIFIC PURPOSE. WITHOUT THE EXPRESS WRITTEN CONSENT OF AVCON, INC., ANY DISTRIBUTION, REPRODUCTION, OR OTHER USE OF THIS DOCUMENT, IN WHOLE OR IN PART, IS STRICTLY PROHIBITED.

WILLIAM A. HAYWARD JR.
FL LICENSE NO.:AR0011007

NO.	DATE	REVISION	BY

DETAILS

100% DESIGN DRAWINGS

AIRPORT TERMINAL AND HANGAR DEVELOPMENT

PREPARED FOR

DEFUNIAK SPRINGS MUNICIPAL AIRPORT

DESIGNED BY:	CH
DRAWN BY:	-
CHECKED BY:	DT
APPROVED BY:	WAH
PROJECT NO:	176232
DATE:	11/1/2021

SHEET NUMBER

A-507

DOOR SCHEDULE

DOOR NUMBER	ROOM NAME	ROOM NUMBER	SIZE HEIGHT	SIZE WIDTH	SIZE THICKNESS	DOOR TYPE	DOOR MATERIAL	DOOR FINISH	FRAME TYPE	FRAME MATERIAL	FRAME FINISH	DETAILS HEAD	DETAILS JAMB	RATINGS FIRE	RATINGS STC	HARDWARE SET	COMMENTS
001	RISER	001	7' - 0"	3' - 0"	1 3/4"	A	HM	PAINTED	F3	HM	PAINTED	3/A-612	4/A-612			03	SEC'D
100	VESTIBULE	100	7' - 7 3/4"	12' - 0"	1 3/4"	H	TEMP GL	GL/AA	-	AL	ALUM	7/A-612	8/A-612			01	SEC'D, BREAK AWAY
101	MEETING ROOM	101	8' - 0"	6' - 2 1/2"	1/2"	B	TEMP GL	GL/AA	-	GL	GL	7/A-612	8/A-612			13	CENTER PIVOT, TEMP GL, UC = 1" - REF ALT #5 FOR BARN DOOR
101A	MEETING ROOM	101	7' - 2"	3' - 0"	1 3/4"	E	TEMP GL	GL/AA	F5	AL	ALUM	7/A-612	8/A-612			02	SEC'D
101B	STOR	101A	7' - 0"	6' - 0"	1 3/4"	G	WD	STAINED	F2	HM	PAINTED	1/A-612	2/A-612			04	UC = 1", SRW,KP
102A	LOBBY	102	7' - 7 3/4"	12' - 0"	1 3/4"	H	TEMP GL	GL/AA	-	AL	ALUM	7/A-612	8/A-612			01	SEC'D, BREAK AWAY
102B	LOBBY	102	7' - 2"	2' - 6"	1 3/4"	C	TEMP GL	GL/AA	-	AL	ALUM	7/A-612	8/A-612			02	SEC'D
102C	STOR	101A	7' - 0"	6' - 0"	1 3/4"	G	WD	STAINED	F2	HM	PAINTED	1/A-612	2/A-612			04	UC = 1", SRW,KP
103A	CORRIDOR	103	7' - 0"	3' - 0"	1 3/4"	C	TEMP GL	GL/AA	F1	AL	ALUM	9/A-612	10/A-612			06	SEC'D, UC = 1", FLUTED GLASS
103B	CORRIDOR	103	7' - 0"	3' - 0"	1 3/4"	E	TEMP GL	GL/AA	F5	AL	ALUM	5/A-612	6/A-612			02	SEC'D
103C	STOR. CLOSET	103A	7' - 0"	9' - 0"	1 3/4"	I	WD	STAINED	-	HM	PAINTED	1/A-612	2/A-612			14	OVERHEAD TRACK, UC = 1", LOUVERED DOOR
103D	CORRIDOR	103	7' - 0"	3' - 0"	1 3/4"	A	HM	PAINTED	F3	HM	PAINTED	3/A-612	4/A-612	90 MIN		07	SEC'D
104	OFFICE	104	7' - 0"	2' - 6"	1 3/4"	F	WD	STAINED	F1	HM	PAINTED	1/A-612	2/A-612		STC 42	05	SRW, SR
105	OFFICE	105	7' - 0"	2' - 6"	1 3/4"	F	WD	STAINED	F1	HM	PAINTED	1/A-612	2/A-612		STC 42	05	SRW, SR
107	JANITOR	107	7' - 0"	2' - 6"	1 3/4"	A	HM	PAINTED	F1	HM	PAINTED	1/A-612	2/A-612			08	KP, UC = 1"
108	STORAGE	108	7' - 0"	2' - 6"	1 3/4"	A	HM	PAINTED	F1	HM	PAINTED	1/A-612	2/A-612			08	UC = 1", KP
109	FBO RR & SHOWER	109	7' - 0"	3' - 0"	1 3/4"	A	HM	PAINTED	F1	HM	PAINTED	1/A-612	2/A-612			10	UC = 1",KP
110A	OFFICE	110A	7' - 0"	3' - 0"	1 3/4"	C	TEMP GL	STAINED	F1	AL	ALUM	9/A-612	10/A-612		STC 42	05	UC = 1", SR
110B	SECURED STORAGE	110B	7' - 0"	2' - 6"	1 3/4"	F	WD	STAINED	F1	HM	PAINTED	1/A-612	2/A-612			09	SEC'D, UC = 1", SRW
111	RR MEN	111	7' - 2"	3' - 0"	1 3/4"	C	WD/TEMP GL	STAINED	F1	HM	PAINTED	1/A-612	2/A-612			12	TEMP FLUTED GL, KP, UC = 1"
112	RR WOMEN	112	7' - 2"	3' - 0"	1 3/4"	C	WD/TEMP GL	STAINED	F1	HM	PAINTED	1/A-612	2/A-612			12	TEMP FLUTED GL, KP, UC = 1"
113A	CORRIDOR	113	7' - 0"	3' - 0"	1 3/4"	A	HM	PAINTED	F3	HM	PAINTED	3/A-612	4/A-612	90 MIN		07	SEC'D, KP
114	JAN	114	7' - 0"	4' - 0"	1 3/4"	G	WD	STAINED	F2	HM	PAINTED	1/A-612	2/A-612			16	KP, SRW, UC = 1"
115	ELEC	115	7' - 0"	4' - 0"	1 3/4"	G	WD	STAINED	F2	HM	PAINTED	1/A-612	2/A-612			16	SEC'D, SRW, KP, UC = 1"
116	MECH	116	7' - 0"	4' - 0"	1 3/4"	G	WD	STAINED	F2	HM	PAINTED	1/A-612	2/A-612			17	SEC'D, KP, SRW
116A	CHASE	115A	7' - 0"	2' - 6"	1 3/4"	A	HM	PAINTED	F1	HM	PAINTED	1/A-612	2/A-612			11	KP, UC = 1"
118	FLIGHT INSTRUCTOR	118	7' - 0"	3' - 0"	1 3/4"	F	WD	STAINED	F1	HM	PAINTED	1/A-612	2/A-612	45 MIN	STC 42	06	SEC'D, SRW, SR
119	OFFICE	119	7' - 0"	3' - 0"	1 3/4"	F	WD	STAINED	F1	HM	PAINTED	1/A-612	2/A-612	45 MIN	STC 42	06	SRW, SR
120	CORRIDOR	113	7' - 0"	3' - 0"	1 3/4"	F	WD	STAINED	F1	HM	PAINTED	1/A-612	2/A-612	45 MIN	STC 42	06	SRW, SR
120A	FLIGHT CREW QUIET ROOM	120	7' - 0"	3' - 0"	1 3/4"	F	WD	STAINED	F1	HM	PAINTED	1/A-612	2/A-612		STC 42	15	SRW, SR
121	FLIGHT CREW LOUNGE	121	7' - 0"	3' - 0"	1 3/4"	F	WD	STAINED	F1	HM	PAINTED	1/A-612	2/A-612		STC 42	06	SRW, SR, SEC'D
121B	FLIGHT CREW RESTROOM & SHOWER	121B	7' - 0"	3' - 0"	1 3/4"	F	WD	STAINED	F1	HM	PAINTED	1/A-612	2/A-612			10	UC = 1", SRW, KP
125	SERVER	125	7' - 0"	2' - 6"	1 3/4"	A	HM	PAINTED	F1	HM	PAINTED	1/A-612	2/A-612			09	SEC'D, UC = 1"

LEGEND - DOOR FRAME

TYPE	DESCRIPTION
-	NONE / FUTURE
AC	ACCESS CONTROL / SECURED
AL	ALUMINUM STOREFRONT
HM	HOLLOW METAL

LEGEND - DOOR TYPE

TYPE	DESCRIPTION
AA	ANOODIZED ALUMINUM
AC	ACCESS
AE	AUTOMATIC ENTRANCE
AFE	ALUMINUM-FRAMED ENTRANCE
AGE	ALL-GLASS ENTRANCE
CL	CHAIN LINK
CS	CUSTOM STEEL
CSI	CUSTOM STEEL (INSULATED)
FD	FOLDING
HM	HOLLOW METAL
HMI	HOLLOM METAL (INSULATED)
KP	KICK PLATE
SEC'D	SECURED WITH ACCESS CONTROL AND EMERGENCY PUSH BUTTON @ EGRESS DOORS
SR	SOUND RATED MIN STC RATING = 42
SRW	STILE AND RAIL WOOD
TEMP GL	TEMPERED GLAZING
UC = 1"	1" UNDER CUT
WC	WOOD CLOSET
WDHC	WOOD (HOLLOW CORE)
WDSC	WOOD (SOLID CORE)

WINDOW SCHEDULE

TYPE	DESCRIPTION
A	WINDOW - INSULATED GLASS
B	WINDOW - INSULATED GLASS W/ FROSTED FILM
D	WINDOW - INTERIOR VISION WINDOW

LOUVER SCHEDULE

Type Mark	Comments	Description
L1	LOUVER	BAHAMA SHUTTER - CLERESTORY W/ WINDOW TYPE "C"
L2	LOUVER	BAHAMA SHUTTER FIBERGLASS W/ WINDOW TYPE "A"

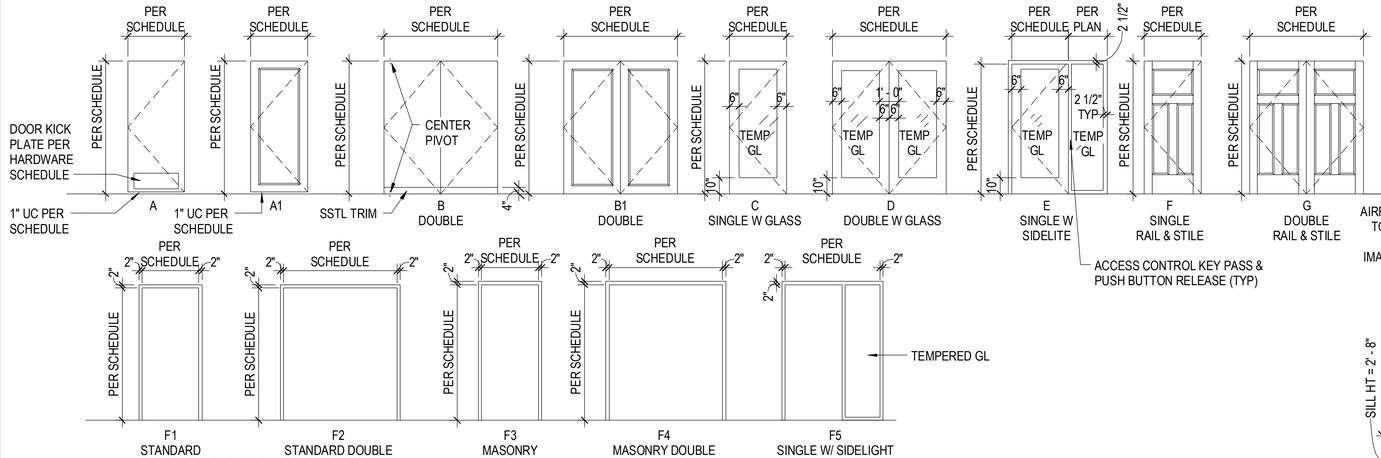

1 DOOR & FRAME TYPES

SCALE: 1/4" = 1'-0"

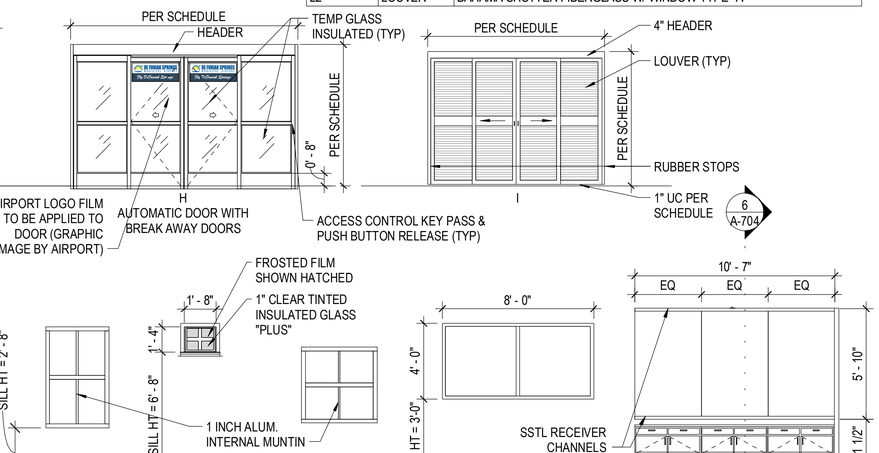

2 WINDOW TYPES

SCALE: 1/4" = 1'-0"

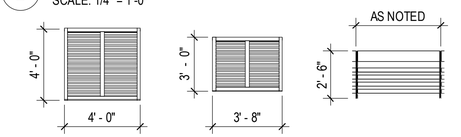

3 LOUVER TYPES

SCALE: 1/4" = 1'-0"

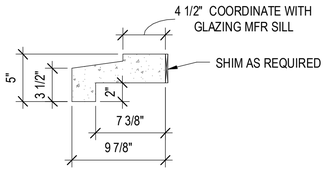

4 TYPICAL SEALED PRECAST WINDOW SILL

SCALE: 1 1/2" = 1'-0"

NOTES - DOORS AND FRAMES

1. ALL EXTERIOR DOOR ASSEMBLIES TO BE FBC APPROVED IMPACT RATED ASSEMBLIES
2. ALL DOOR GLAZING TO BE TEMPERED GLASS
3. ALL DOORS WITH CLOSERS TO BE ADA ACCESSIBLE
4. DOORS LEADING TO APRON ARE TO BE SECURED; ACCESS CONTROL DEVICES TO BE MOUNTED IN MULLIONS
5. EMERGENCY EGRESS DOORS TO HAVE DELAYED EGRESS @ SECURED LOCATIONS
6. AT FRAMED WALLS, THE DOOR FRAME WIDTH SHALL BE DICTATED BY THE WALL FRAMING WIDTH. REFER TO DETAIL J1 & H1.
7. AT MASONRY WALLS, THE DOOR FRAME WIDTH SHALL BE DICTATED BY THE WIDTH OF THE MASONRY. REFER TO DETAILS J2A & H2A.
8. ALL EXTERIOR GLASS DOORS TO HAVE 1" INSULATED IMPACT RESISTANT GLASS; WIND SPEED PER STRUCTURAL DRAWINGS.
9. ALL GLASS ADJACENT TO DOORS OR WITHIN DOOR ARE TO BE TEMPERED (TEMP) GLASS.
10. WHERE NOTED, UNDER CUT DOORS 1" ABOVE FINISH FLOOR. "UC" = UNDER CUT.
11. PREFINISH / PAINT TOP AND BOTTOM OF DOORS PRIOR TO HANGING DOORS.
12. GLASS FINISH TYPES (ALL TEMP): "F" = FROSTED / "PS" = PIN STRIPED / "CLR" = CLEAR WITH MUTTONS / "INS" = INSULATED PER DOOR TYPE. EXTERIOR GLASS TINTED TO MATCH WINDOWS.

NOTES - DOORS AND FRAMES

13. "SEC'D" = SECURED / ACCESS CONTROLLED DOORS W/ MAGNETIC LOCK: COORDINATE W/ OWNER'S SECURITY CONSULTANT.
14. "PR" = PAIR OF DOORS.
15. "THR" = THRESHOLD.
16. "TRN" = TRANSOM-TEMP GLASS ABOVE DOOR TO CEILING
17. EMERGENCY EGRESS - OPEN IN EVENT OF ALARM
18. ALL DOORS AND FRAMES TO BE FULLY WELDED; No. "Z" SHAPED SECTIONS (@ DOORS) OR BUTT JOINTS.
19. KNOCK DOWN FRAMES WILL NOT BE ALLOWED.
20. ALL FIRE RATED DOORS SHALL BE UL RATED.
21. REFER TO SPECIFICATIONS FOR HARDWARE, AND ADDITIONAL DOOR & FRAME REQUIREMENTS.
22. ACCESS CONTROL WIRING TO BE CONCEALED IN DOOR FRAME & ACCESS CONTROL JOINT TO BE NARROW STYLE & MOUNTED IN.
23. ALL EXTERIOR FRAME HM DOORS TO HAVE LOCK GUARDS
24. AUTOMATIC DOORS & SEC'D DOORS WITH PANIC DEVICES SHALL BE COORDINATED WITH AIRPORT'S SECURITY SYSTEM SOFTWARE
25. REFER ALT #5 FOR BARN @ MEETING ROOM OPTION, IN LIEU OF TEMP GLASS DOOR & BUTT GLAZING
26. ALL DOUBLE DOORS SHALL HAVE AUTO FLUSH BOLTS & KEEPERS

FOR PERMIT & BIDDING ONLY

AVCON

TRANSFORMING TODAY'S IDEAS INTO TOMORROW'S REALITY

WILLIAM A. HAYWARD JR.
FL LICENSE NO.:AR0011007

NO.	DATE	REVISION	BY
2	11/8/21	ISSUED FOR REBID	WAH
1		um No. 1	

DOOR SCHEDULE, DOOR AND WINDOW ELEVATIONS

100% DESIGN DRAWINGS

AIRPORT TERMINAL AND HANGAR DEVELOPMENT

PREPARED FOR

DEFUNIAK SPRINGS MUNICIPAL AIRPORT

DESIGNED BY:	CH
DRAWN BY:	AB
CHECKED BY:	DT
APPROVED BY:	WAH
PROJECT NO:	176232
DATE:	11/1/2021

SHEET NUMBER

A-611

THIS DOCUMENT CONTAINS PRIVILEGED AND PROPRIETARY INFORMATION, ALL OF WHICH IS EXPRESSLY PROVIDED BY AVCON, INC., FOR USE BY THE INTENDED RECIPIENT, AND FOR A SPECIFIC PURPOSE, WITHOUT THE EXPRESS WRITTEN CONSENT OF AVCON, INC. ANY DISTRIBUTION, REPRODUCTION, OR OTHER USE OF THIS DOCUMENT, IN WHOLE OR IN PART, IS STRICTLY PROHIBITED.

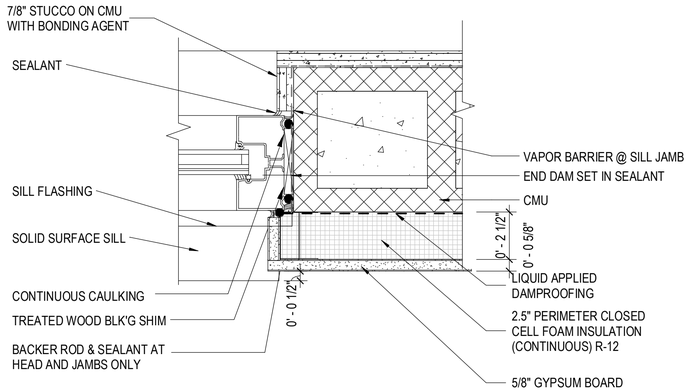

13 A-WINDOW JAMB DETAIL WITH STUCCO FINISH
SCALE: 3" = 1'-0"

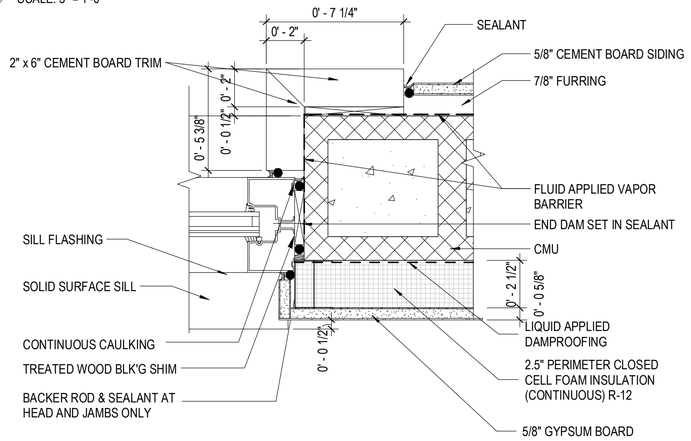

12 B-WINDOW JAMB DETAIL WITH SIDING VENEER
SCALE: 3" = 1'-0"

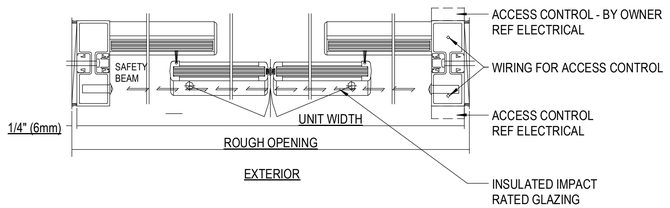

9 J7 - SLIDING DOOR DETAIL
SCALE: 1" = 1'-0"

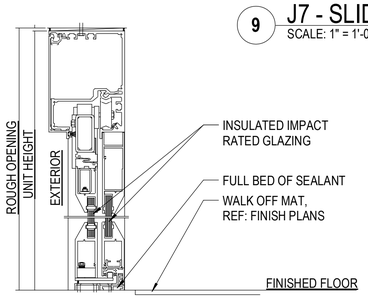

10 H7 - SLIDING DOOR HEAD DETAIL
SCALE: 1" = 1'-0"

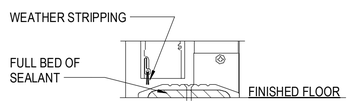

11 STOREFRONT THRESHOLD
SCALE: 1" = 1'-0"

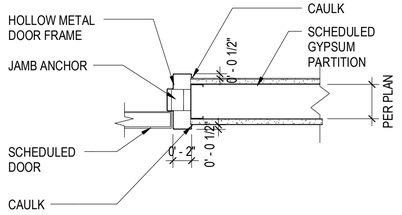

5 J1 - HOLLOW METAL FRAME JAMB DETAIL
SCALE: 1 1/2" = 1'-0"

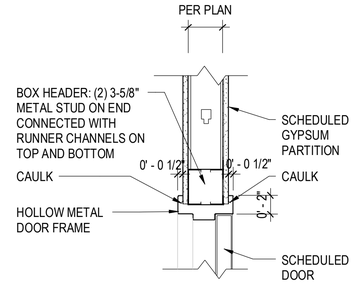

1 H1 - HOLLOW METAL FRAME HEAD DETAIL
SCALE: 1 1/2" = 1'-0"

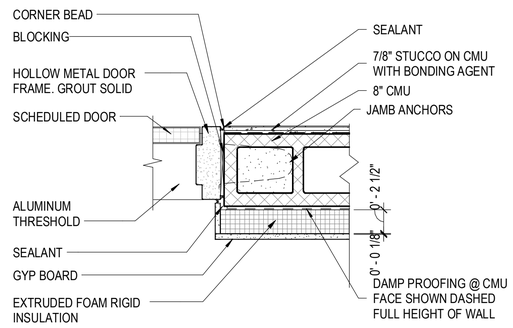

6 J2A - HOLLOW METAL FRAME JAMB DETAIL
SCALE: 1 1/2" = 1'-0"

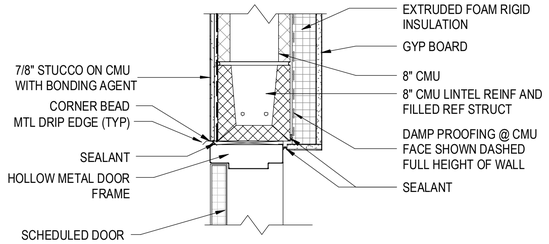

2 H2A - HOLLOW METAL FRAME HEAD DETAIL
SCALE: 1 1/2" = 1'-0"

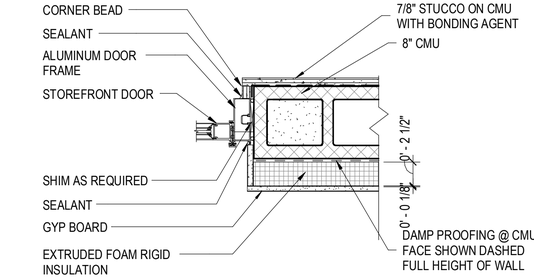

7 J3 - STOREFRONT JAMB
SCALE: 1 1/2" = 1'-0"

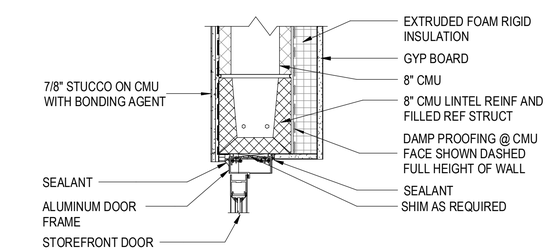

3 H3 - STOREFRONT HEAD
SCALE: 1 1/2" = 1'-0"

NOTE:
1. REFER TO EXTERIOR ELEVATIONS FOR SIDING MATERIAL & TRIM @ SIM CONDITIONS.

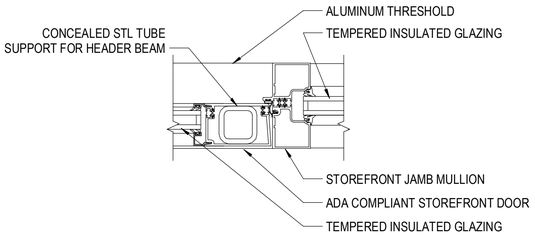

8 J4 - STOREFRONT JAMB DETAIL
SCALE: 3" = 1'-0"

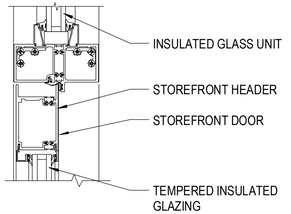

4 H4 - STOREFRONT HEAD DETAIL
SCALE: 3" = 1'-0"

FOR PERMIT & BIDDING ONLY

AVCON
TRANSFORMING TODAY'S IDEAS INTO TOMORROW'S REALITY

WILLIAM A. HAYWARD JR.
FL LICENSE NO.:AR0011007

NO.	DATE	REVISION	BY

DOOR AND JAMB DETAILS

100% DESIGN DRAWINGS

AIRPORT TERMINAL AND HANGAR DEVELOPMENT

PREPARED FOR
DEFUNIAK SPRINGS MUNICIPAL AIRPORT

DESIGNED BY:	CH
DRAWN BY:	AB
CHECKED BY:	DT
APPROVED BY:	WAH
PROJECT NO:	176232
DATE:	11/1/2021

SHEET NUMBER
A-612

THIS DOCUMENT CONTAINS PRIVILEGED AND PROPRIETARY INFORMATION, ALL OF WHICH IS EXPRESSLY PROVIDED BY AVCON, INC., FOR USE BY THE INTENDED RECIPIENT, AND FOR A SPECIFIC PURPOSE. WITHOUT THE EXPRESS WRITTEN CONSENT OF AVCON, INC., ANY DISTRIBUTION, REPRODUCTION, OR OTHER USE OF THIS DOCUMENT, IN WHOLE OR IN PART, IS STRICTLY PROHIBITED.

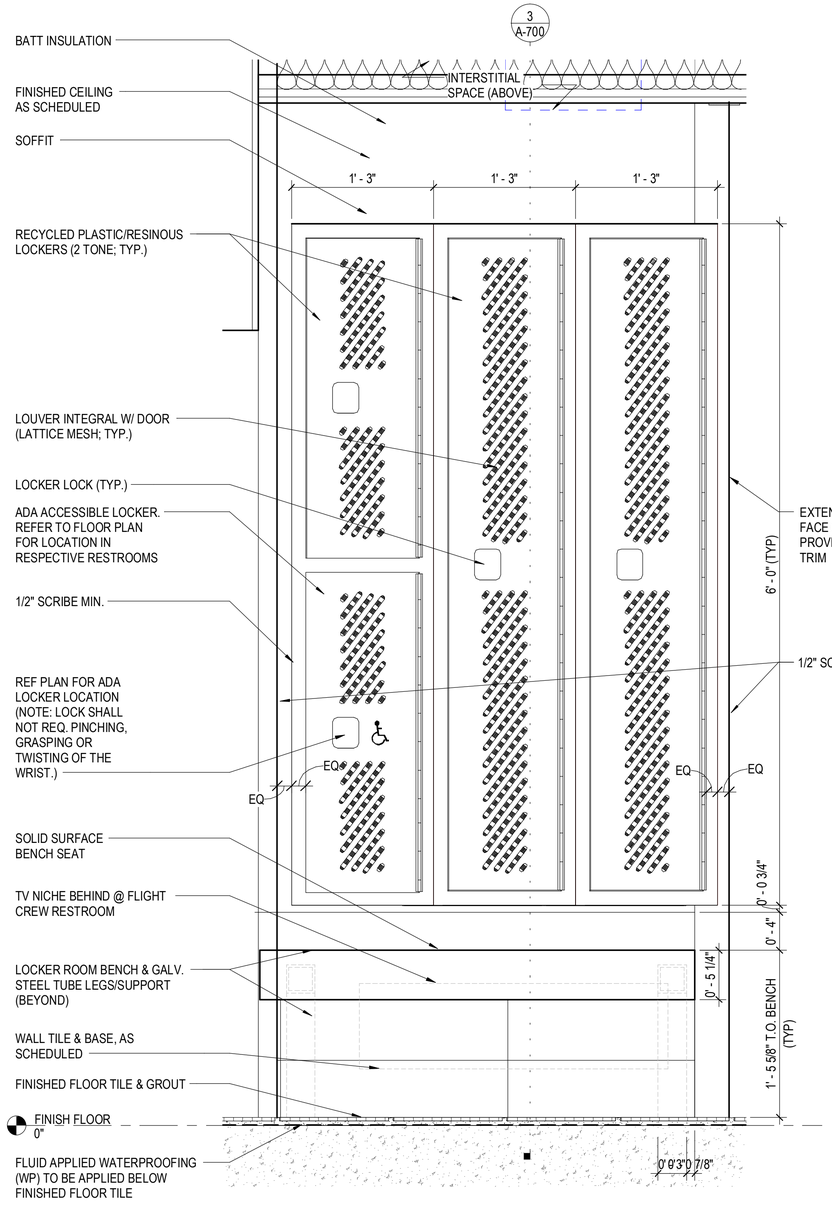

1 LOCKER ROOM ELEVATION DETAIL
SCALE: 1 1/2" = 1'-0"

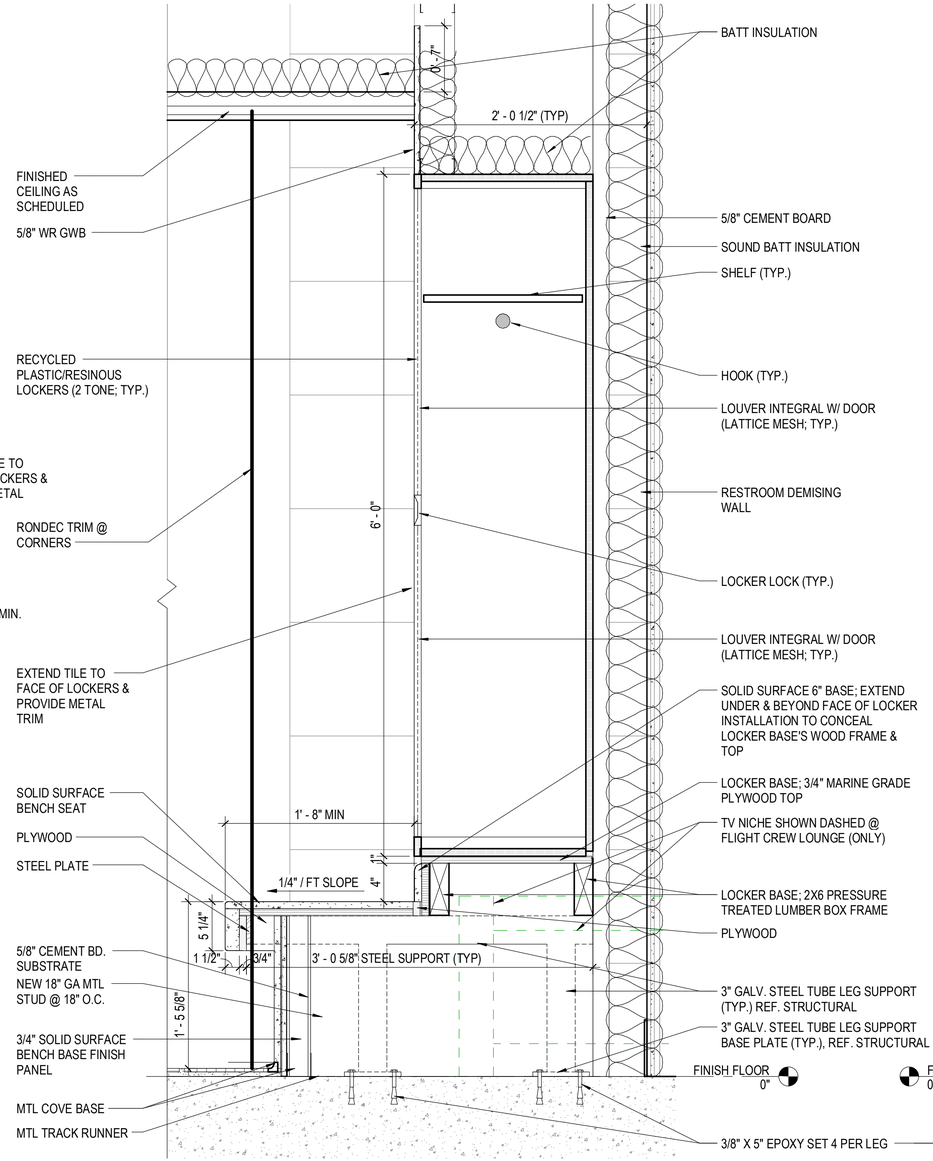

2 LOCKER DETAIL
SCALE: 1 1/2" = 1'-0"

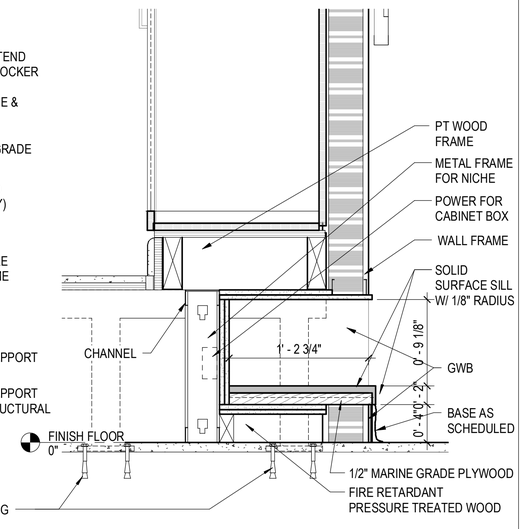

3 TV NICHE @ FLIGHT CREW
SCALE: 1 1/2" = 1'-0"

FOR PERMIT & BIDDING ONLY

AVCON
TRANSFORMING TODAY'S IDEAS INTO TOMORROW'S REALITY

WILLIAM A. HAYWARD JR.
FL LICENSE NO.:AR0011007

NO.	DATE	REVISION	BY

MILLWORK DETAILS 01

100% DESIGN DRAWINGS

AIRPORT TERMINAL AND HANGAR DEVELOPMENT

PREPARED FOR

DEFUNIAK SPRINGS MUNICIPAL AIRPORT

DESIGNED BY:	CH
DRAWN BY:	MS
CHECKED BY:	DT
APPROVED BY:	WAH
PROJECT NO:	176232
DATE:	11/1/2021

SHEET NUMBER

A-700

THIS DOCUMENT CONTAINS PRIVILEGED AND PROPRIETARY INFORMATION, ALL OF WHICH IS EXPRESSLY PROVIDED BY AVCON, INC., FOR USE BY THE INTENDED RECIPIENT, AND FOR A SPECIFIC PURPOSE. WITHOUT THE EXPRESS WRITTEN CONSENT OF AVCON, INC., ANY DISTRIBUTION, REPRODUCTION, OR OTHER USE OF THIS DOCUMENT, IN WHOLE OR IN PART, IS STRICTLY PROHIBITED.

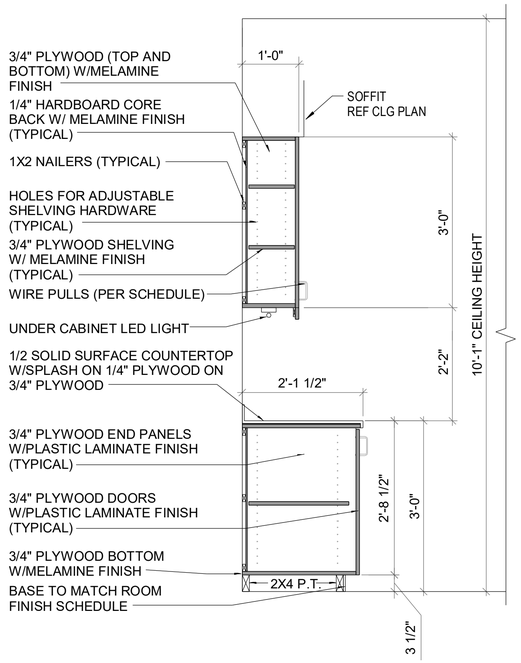

1 DETAIL SECTION - BREAKROOM COUNTER
SCALE: 3/4" = 1'-0"

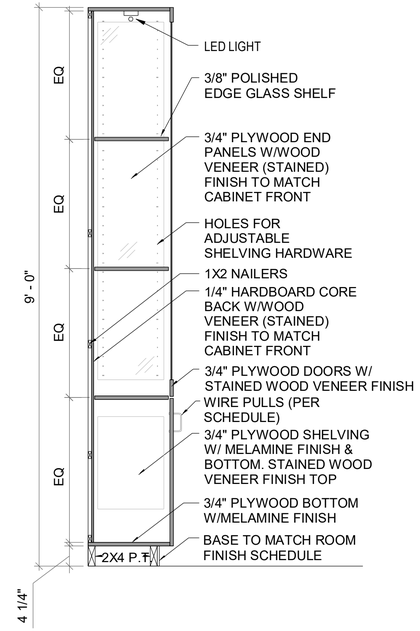

2 DETAIL SECTION - DISPLAY CABINET
SCALE: 3/4" = 1'-0"

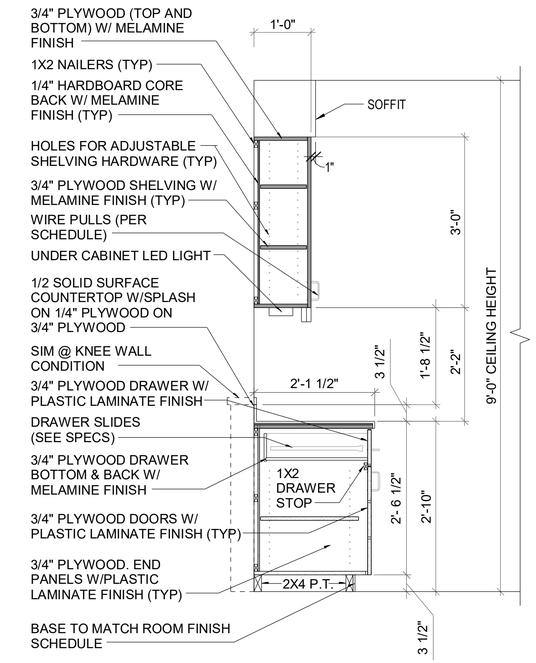

3 DETAIL SECTION - FBO OFFICE WORK COUNTER
SCALE: 3/4" = 1'-0"

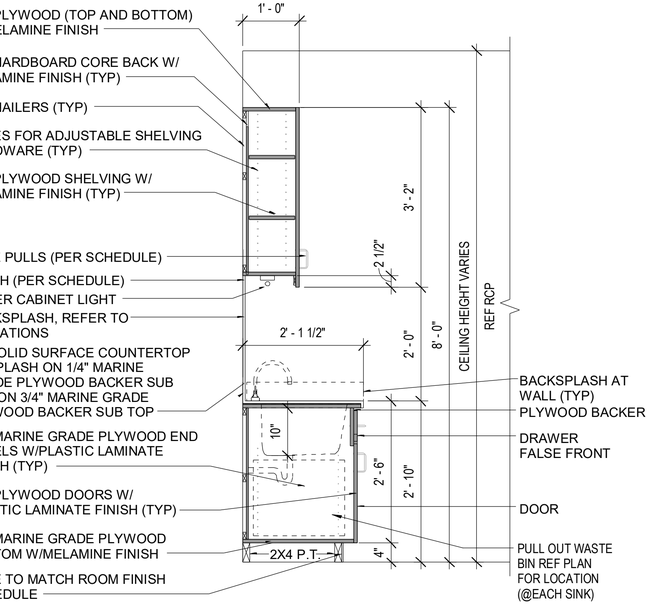

4 DETAIL SECTION - BREAKROOM COUNTER AT SINK
SCALE: 3/4" = 1'-0"

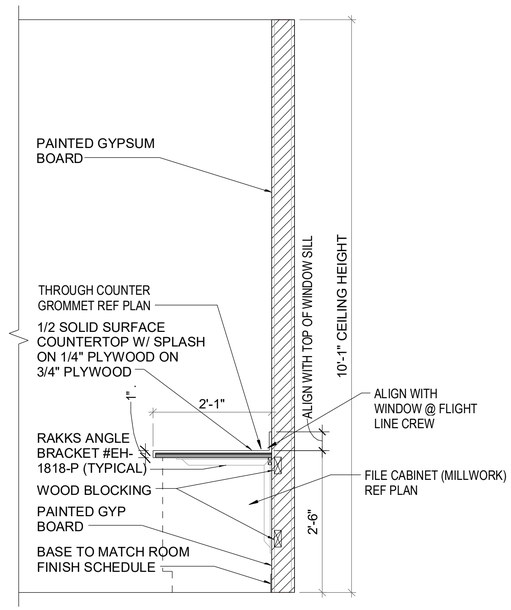

5 DETAIL SECTION - FBO FLIGHT LINE WORK STATION
SCALE: 3/4" = 1'-0"

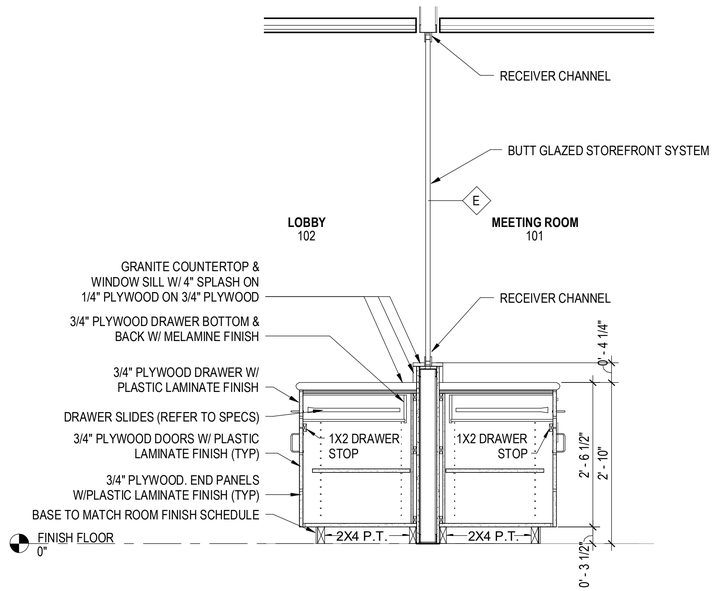

6 DETAIL SECTION - MEETING ROOM COUNTER
SCALE: 3/4" = 1'-0"

NOTE:
SAME ANNOTATIONS & DIMENSIONS APPLY TO MEETING ROOM COUNTER AS LOBBY

FOR PERMIT & BIDDING ONLY

AVCON
TRANSFORMING TODAY'S IDEAS INTO TOMORROW'S REALITY

WILLIAM A. HAYWARD JR.
FL LICENSE NO.:AR0011007

NO.	DATE	REVISION	BY
		um No. 1	

MILLWORK DETAILS 05

100% DESIGN DRAWINGS

AIRPORT TERMINAL AND HANGAR DEVELOPMENT

PREPARED FOR
DEFUNIAK SPRINGS MUNICIPAL AIRPORT

DESIGNED BY:	CH
DRAWN BY:	-
CHECKED BY:	DT
APPROVED BY:	WAH
PROJECT NO:	176232
DATE:	11/1/2021

SHEET NUMBER

A-704

THIS DOCUMENT CONTAINS PRIVILEGED AND PROPRIETARY INFORMATION, ALL OF WHICH IS EXPRESSLY PROVIDED BY AVCON, INC., FOR USE BY THE INTENDED RECIPIENT, AND FOR A SPECIFIC PURPOSE. WITHOUT THE EXPRESS WRITTEN CONSENT OF AVCON, INC., ANY DISTRIBUTION, REPRODUCTION, OR OTHER USE OF THIS DOCUMENT, IN WHOLE OR IN PART, IS STRICTLY PROHIBITED.

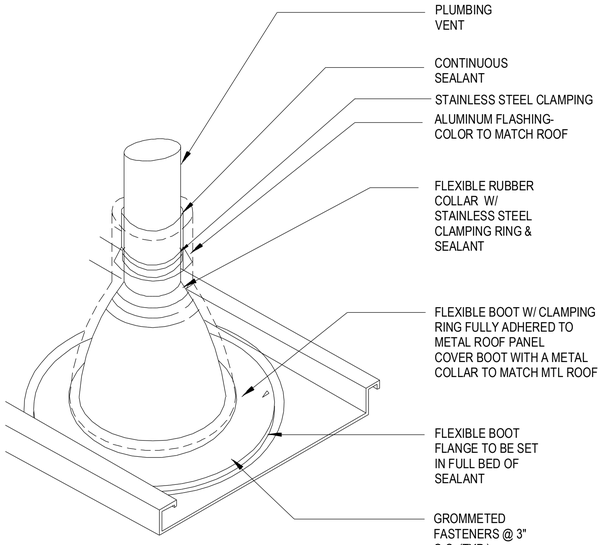

1 VENT PIPE
SCALE: 3" = 1'-0"

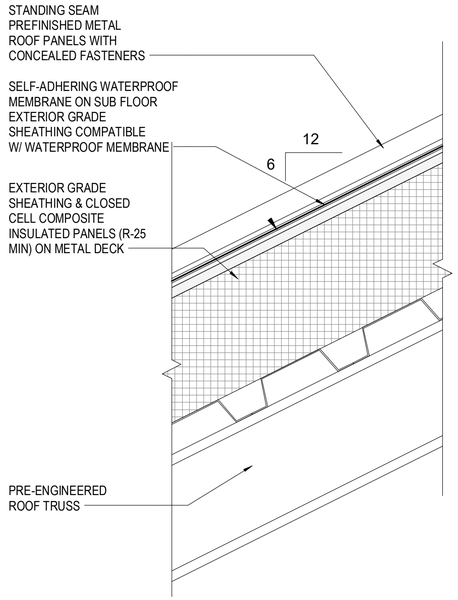

2 TYPICAL ROOF SYSTEM
SCALE: 3" = 1'-0"

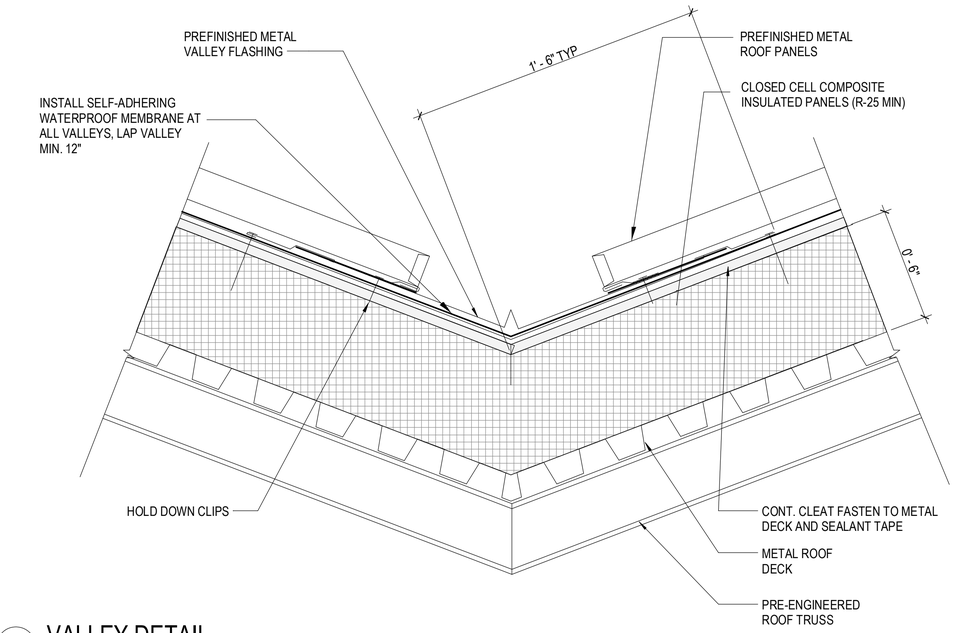

3 VALLEY DETAIL
SCALE: 3" = 1'-0"

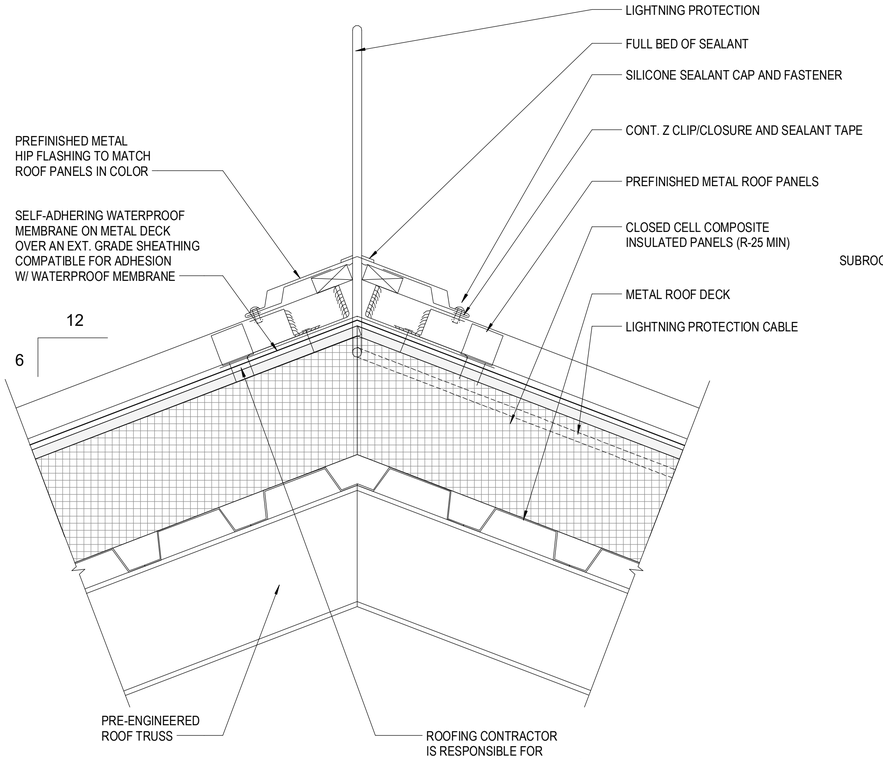

4 HIP / RIDGE DETAIL
SCALE: 3" = 1'-0"

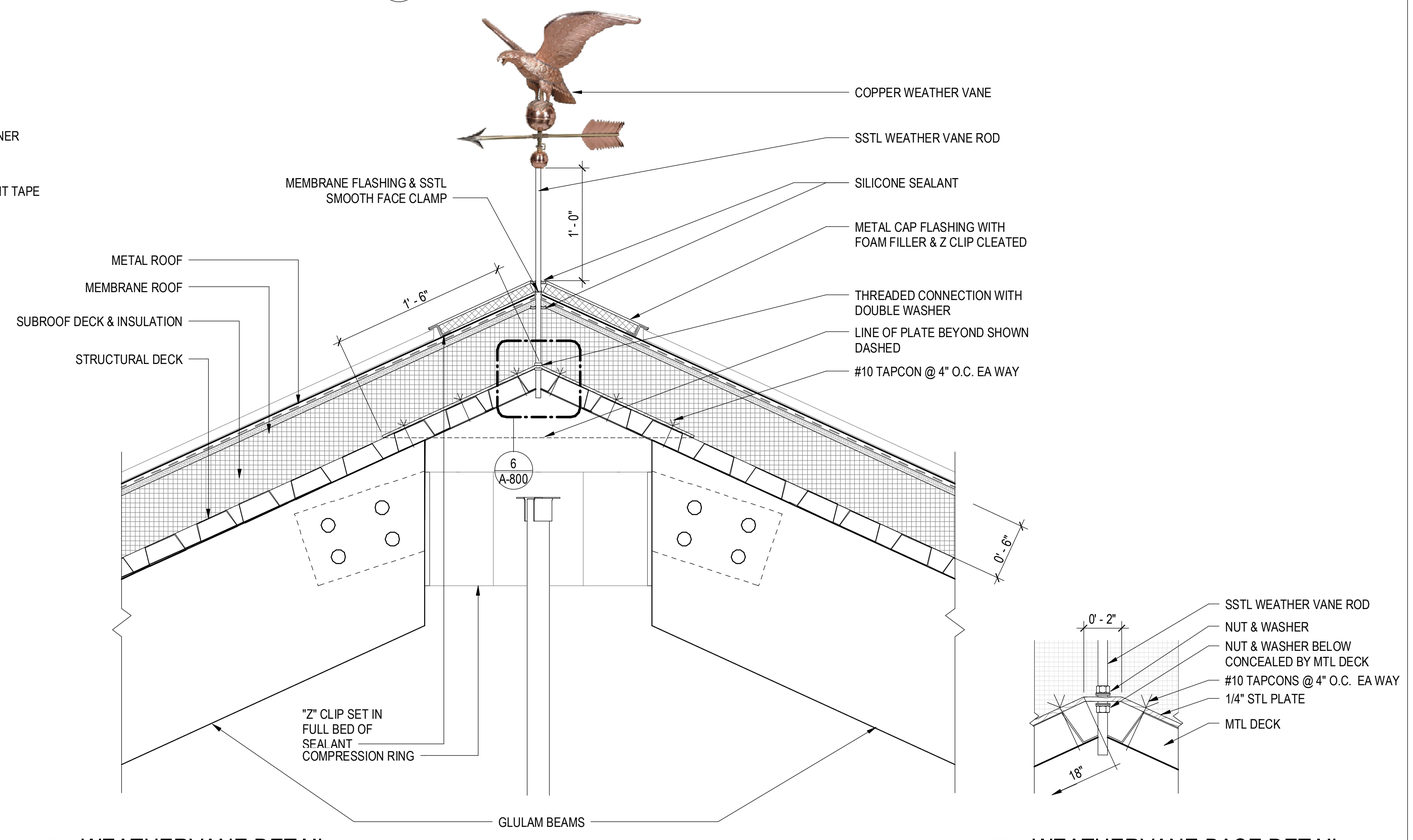

5 WEATHERVANE DETAIL
SCALE: 1 1/2" = 1'-0"

6 WEATHERVANE BASE DETAIL
SCALE: 3" = 1'-0"

FOR PERMIT & BIDDING ONLY

AVCON
TRANSFORMING TODAY'S IDEAS INTO TOMORROW'S REALITY

WILLIAM A. HAYWARD JR.
FL LICENSE NO.:AR0011007

NO.	DATE	REVISION	BY

ROOF DETAILS 01

100% DESIGN DRAWINGS

AIRPORT TERMINAL AND HANGAR DEVELOPMENT

PREPARED FOR

DEFUNIAK SPRINGS MUNICIPAL AIRPORT

DESIGNED BY:	CH
DRAWN BY:	-
CHECKED BY:	DT
APPROVED BY:	WAH
PROJECT NO:	176232
DATE:	11/1/2021

SHEET NUMBER

A-800

THIS DOCUMENT CONTAINS PRIVILEGED AND PROPRIETARY INFORMATION, ALL OF WHICH IS EXPRESSLY PROVIDED BY AVCON, INC., FOR USE BY THE INTENDED RECIPIENT, AND FOR A SPECIFIC PURPOSE. WITHOUT THE EXPRESS WRITTEN CONSENT OF AVCON, INC., ANY DISTRIBUTION, REPRODUCTION, OR OTHER USE OF THIS DOCUMENT, IN WHOLE OR IN PART, IS STRICTLY PROHIBITED.

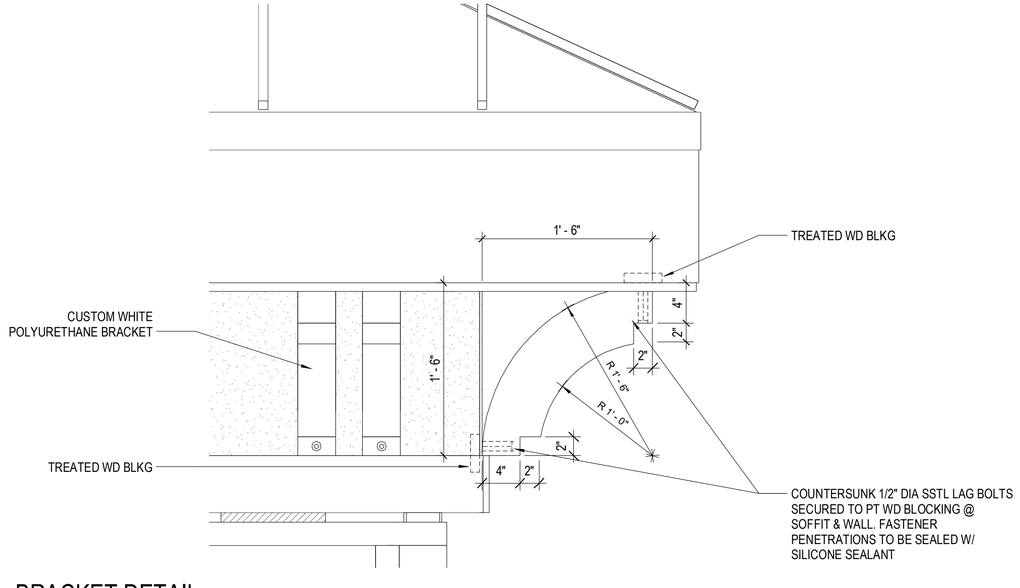

1 BRACKET DETAIL
SCALE: 1 1/2" = 1'-0"

FOR PERMIT & BIDDING ONLY

AVCON
TRANSFORMING TODAY'S IDEAS INTO TOMORROW'S REALITY

WILLIAM A. HAYWARD JR.
FL LICENSE NO.:AR0011007

NO.	DATE	REVISION	BY

ROOF DETAILS 02

100% DESIGN DRAWINGS

AIRPORT TERMINAL AND HANGAR DEVELOPMENT

PREPARED FOR

DEFUNIAK SPRINGS MUNICIPAL AIRPORT

DESIGNED BY:	CH
DRAWN BY:	SM
CHECKED BY:	DT
APPROVED BY:	WAH
PROJECT NO:	176232
DATE:	11/1/2021

SHEET NUMBER

A-801

THIS DOCUMENT CONTAINS PRIVILEGED AND PROPRIETARY INFORMATION, ALL OF WHICH IS EXPRESSLY PROVIDED BY AVCON, INC., FOR USE BY THE INTENDED RECIPIENT, AND FOR A SPECIFIC PURPOSE. WITHOUT THE EXPRESS WRITTEN CONSENT OF AVCON, INC. ANY DISTRIBUTION, REPRODUCTION, OR OTHER USE OF THIS DOCUMENT, IN WHOLE OR IN PART, IS STRICTLY PROHIBITED.

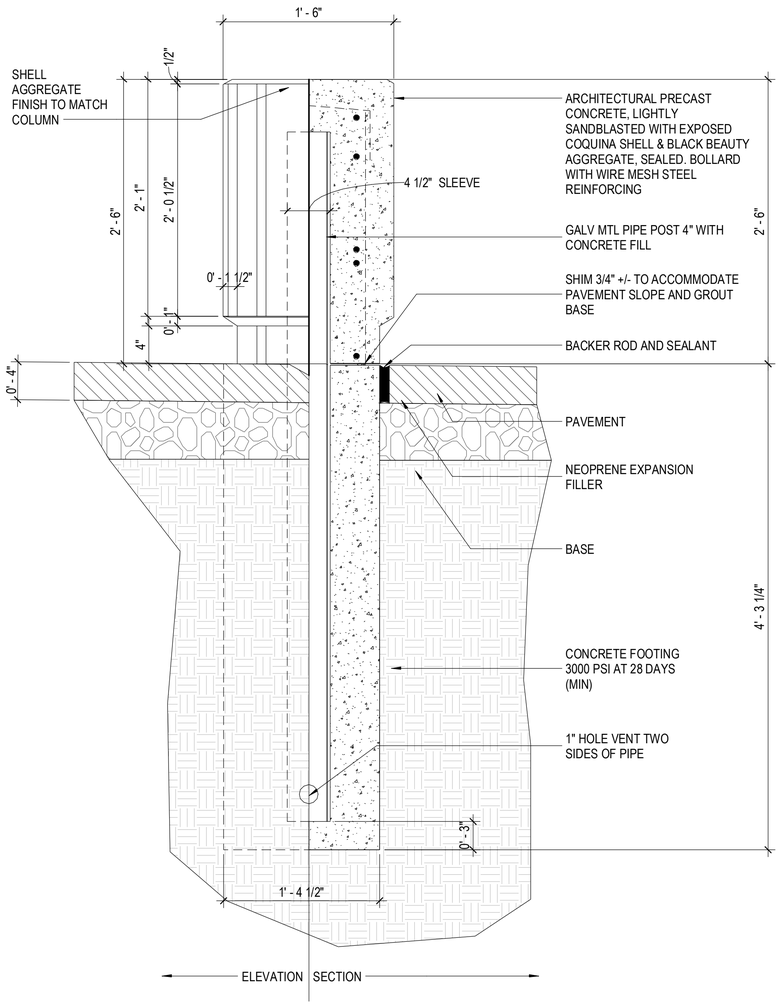

1 CONCRETE BOLLARD - SECTION DETAIL
SCALE: 1 1/2" = 1'-0"

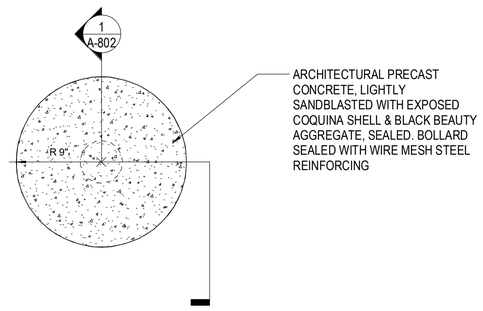

2 CONCRETE BOLLARD - PLAN DETAIL
SCALE: 1 1/2" = 1'-0"

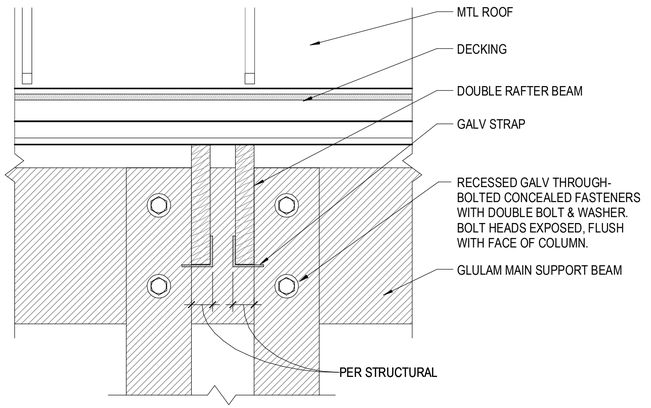

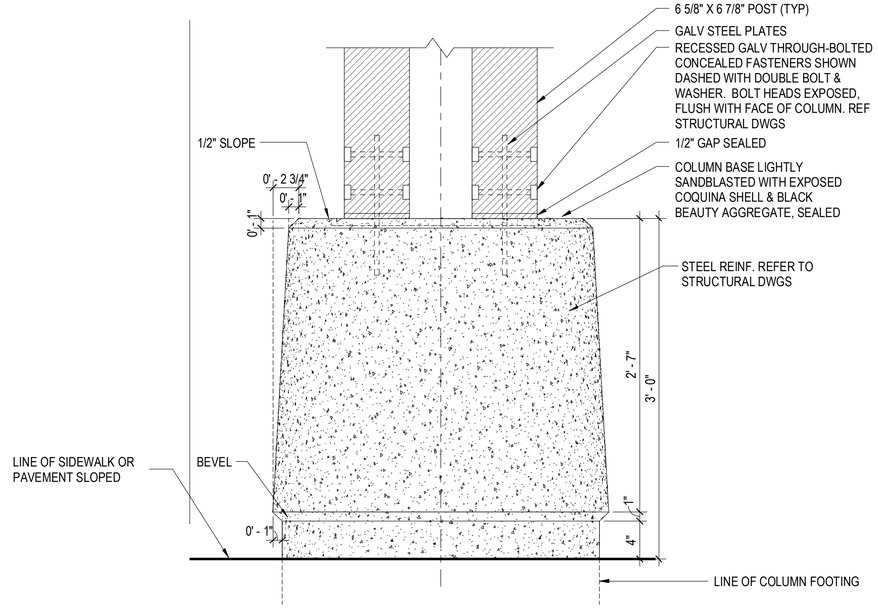

4 CANOPY COLUMN BASE DETAIL
SCALE: 1 1/2" = 1'-0"

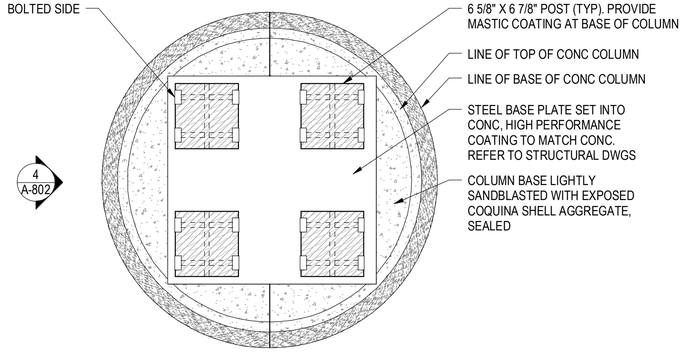

3 CANOPY BASE DETAIL (TYP)
SCALE: 1 1/2" = 1'-0"

FOR PERMIT & BIDDING ONLY

AVCON
TRANSFORMING TODAY'S IDEAS INTO TOMORROW'S REALITY

WILLIAM A. HAYWARD JR.
FL LICENSE NO.:AR0011007

NO.	DATE	REVISION	BY

MISCELLANEOUS DETAILS

100% DESIGN DRAWINGS

AIRPORT TERMINAL AND HANGAR DEVELOPMENT

PREPARED FOR

DEFUNIAK SPRINGS MUNICIPAL AIRPORT

DESIGNED BY:	Designer
DRAWN BY:	Author
CHECKED BY:	Checker
APPROVED BY:	WAH
PROJECT NO:	176232
DATE:	11/1/2021

SHEET NUMBER

A-802

THIS DOCUMENT CONTAINS PRIVILEGED AND PROPRIETARY INFORMATION, ALL OF WHICH IS EXPRESSLY PROVIDED BY AVCON, INC., FOR USE BY THE INTENDED RECIPIENT, AND FOR A SPECIFIC PURPOSE. WITHOUT THE EXPRESS WRITTEN CONSENT OF AVCON, INC., ANY DISTRIBUTION, REPRODUCTION, OR OTHER USE OF THIS DOCUMENT, IN WHOLE OR IN PART, IS STRICTLY PROHIBITED.

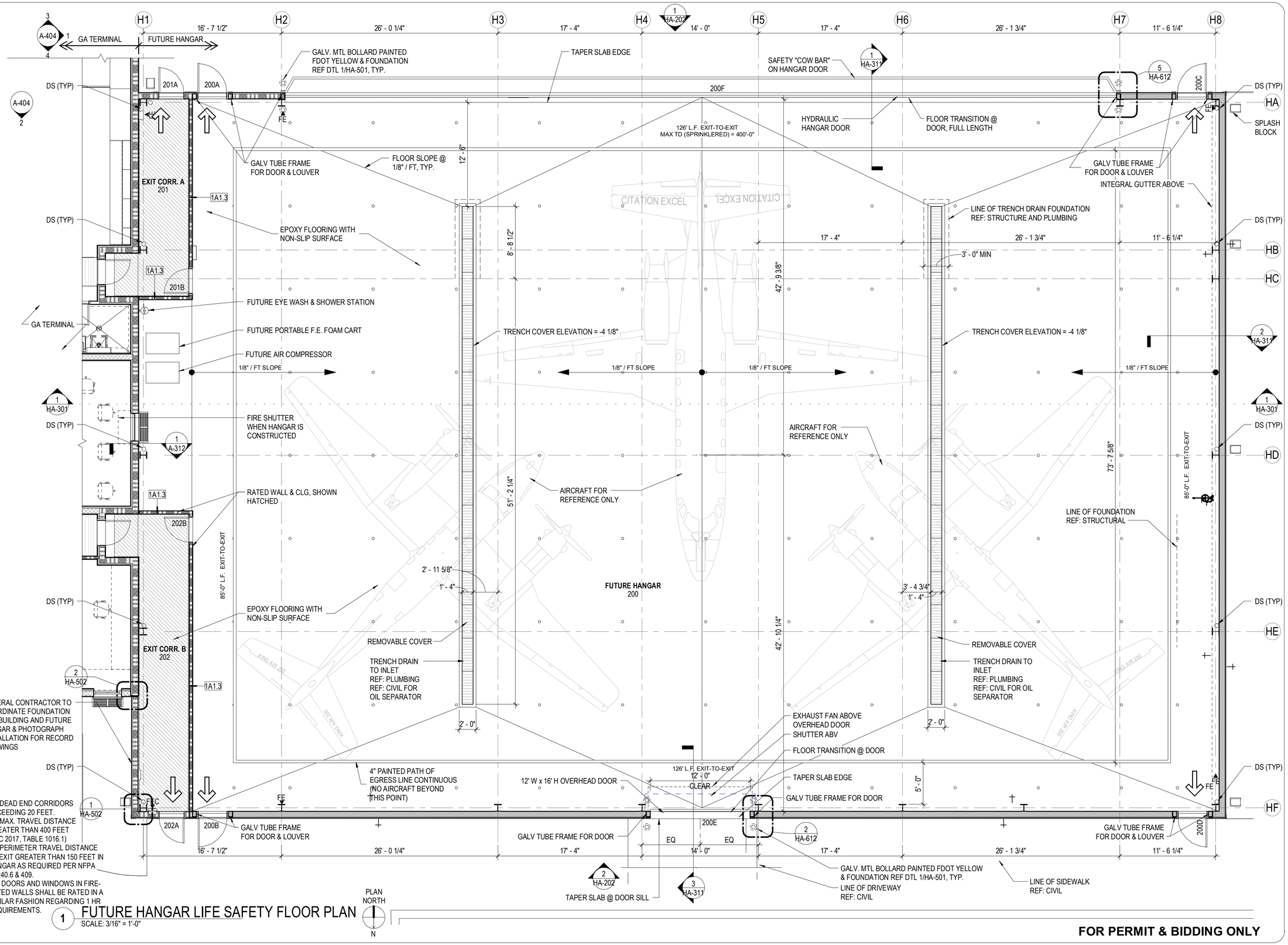

NOTES:

1. NO DEAD END CORRIDORS EXCEEDING 20 FEET.
2. NO MAX. TRAVEL DISTANCE GREATER THAN 400 FEET (FBC 2017, TABLE 1016.1)
3. NO PERIMETER TRAVEL DISTANCE TO EXIT GREATER THAN 150 FEET IN HANGAR AS REQUIRED PER NFPA 101:40.6 & 409.
4. ALL DOORS AND WINDOWS IN FIRE-RATED WALLS SHALL BE RATED IN A SIMILAR FASHION REGARDING 1 HR REQUIREMENTS.

1 FUTURE HANGAR LIFE SAFETY FLOOR PLAN

SCALE: 3/16" = 1'-0"

PLAN NORTH

FOR PERMIT & BIDDING ONLY

AVCON

TRANSFORMING TODAYS IDEAS INTO TOMORROW'S REALITY

WILLIAM A. HAYWARD JR.
FL LICENSE NO.:AR0011007

NO.	DATE	REVISION	BY

ENLARGED FUTURE HANGAR PLAN

100% DESIGN DRAWINGS

AIRPORT TERMINAL AND HANGAR DEVELOPMENT

PREPARED FOR

DEFUNIAK SPRINGS MUNICIPAL AIRPORT

DESIGNED BY:	CH
DRAWN BY:	MW
CHECKED BY:	DT
APPROVED BY:	WAH
PROJECT NO:	176232
DATE:	11/1/2021

SHEET NUMBER

HA-101

THIS DOCUMENT CONTAINS PRIVILEGED AND PROPRIETARY INFORMATION; ALL OF WHICH IS EXPRESSLY PROVIDED BY AVCON, INC., FOR USE BY THE INTENDED RECIPIENT, AND FOR A SPECIFIC PURPOSE. WITHOUT THE EXPRESS WRITTEN CONSENT OF AVCON, INC., ANY DISTRIBUTION, REPRODUCTION, OR OTHER USE OF THIS DOCUMENT, IN WHOLE OR IN PART, IS STRICTLY PROHIBITED.

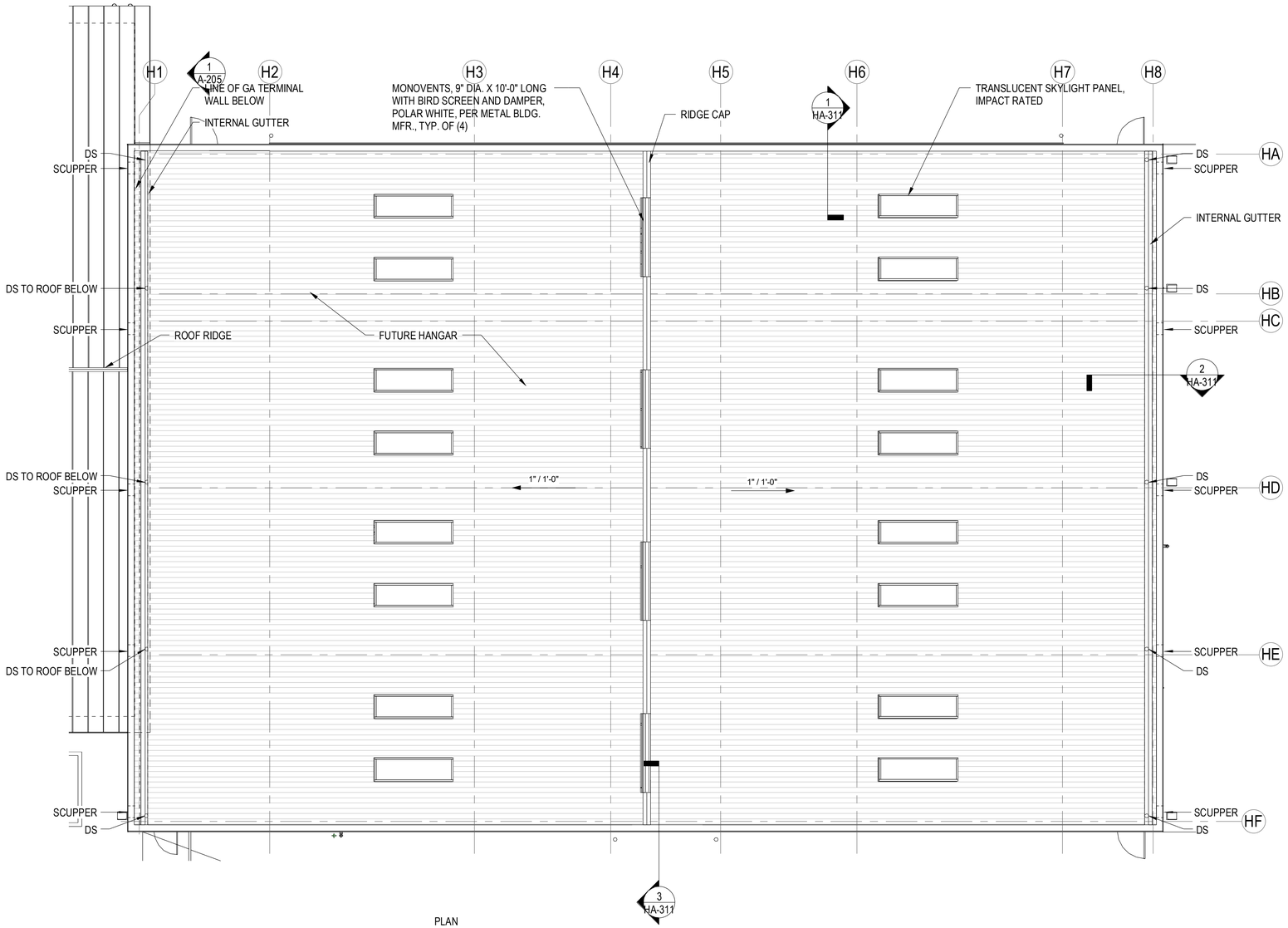

1 FUTURE HANGAR ROOF PLAN
SCALE: 1/8" = 1'-0"

PLAN NORTH
N

0 4' - 0" 8' - 0" 16' - 0"
SCALE: 1/8" = 1' - 0"

FOR PERMIT & BIDDING ONLY

AVCON
TRANSFORMING TODAY'S IDEAS INTO TOMORROW'S REALITY

WILLIAM A. HAYWARD JR.
FL LICENSE NO.:AR0011007

NO.	DATE	REVISION	BY

HANGAR ROOF PLAN

100% DESIGN DRAWINGS

AIRPORT TERMINAL AND HANGAR DEVELOPMENT

PREPARED FOR

DEFUNIAK SPRINGS MUNICIPAL AIRPORT

DESIGNED BY:	CH
DRAWN BY:	DN
CHECKED BY:	DT
APPROVED BY:	WAH
PROJECT NO:	176232
DATE:	11/1/2021

SHEET NUMBER

HA-130

THIS DOCUMENT CONTAINS PRIVILEGED AND PROPRIETARY INFORMATION, ALL OF WHICH IS EXPRESSLY PROVIDED BY AVCON, INC., FOR USE BY THE INTENDED RECIPIENT, AND FOR A SPECIFIC PURPOSE. WITHOUT THE EXPRESS WRITTEN CONSENT OF AVCON, INC., ANY DISTRIBUTION, REPRODUCTION, OR OTHER USE OF THIS DOCUMENT, IN WHOLE OR IN PART, IS STRICTLY PROHIBITED.

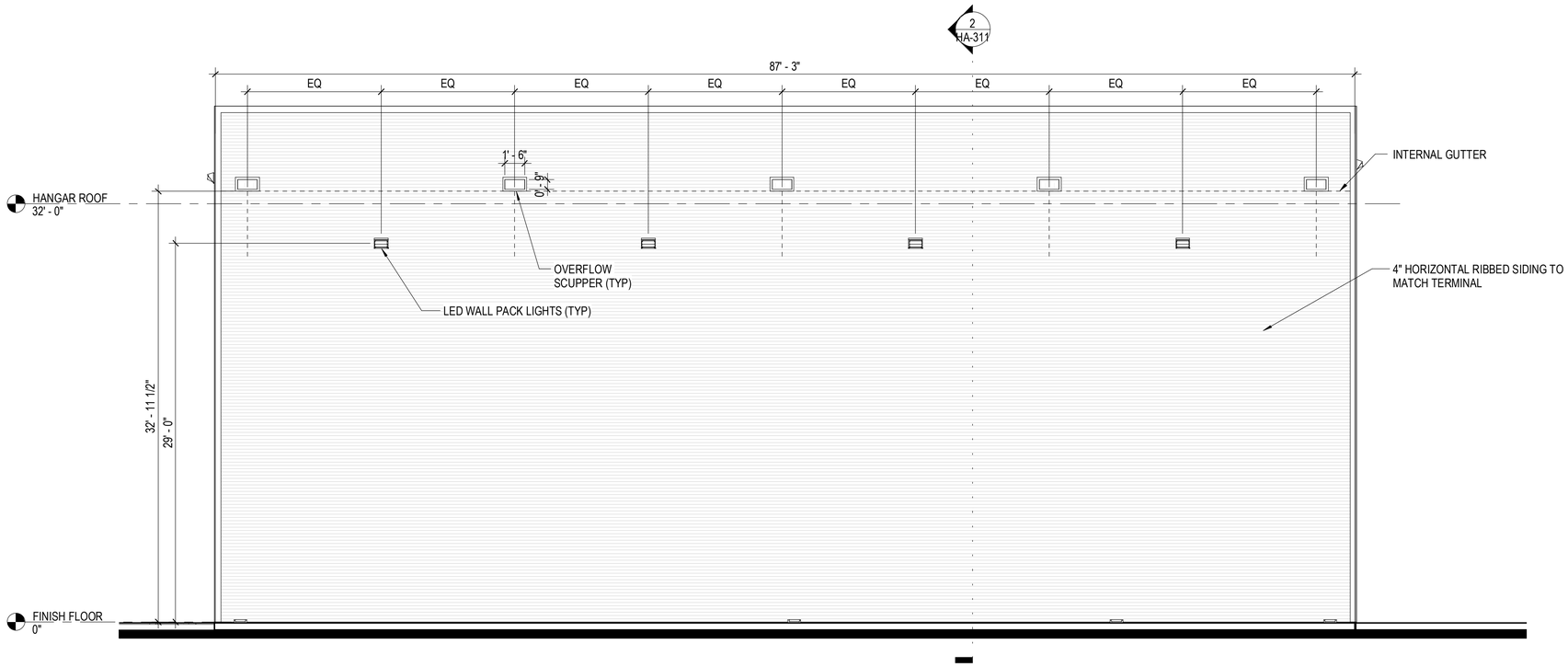

1 FUTURE HANGAR EAST ELEVATION

SCALE: 3/16" = 1'-0"

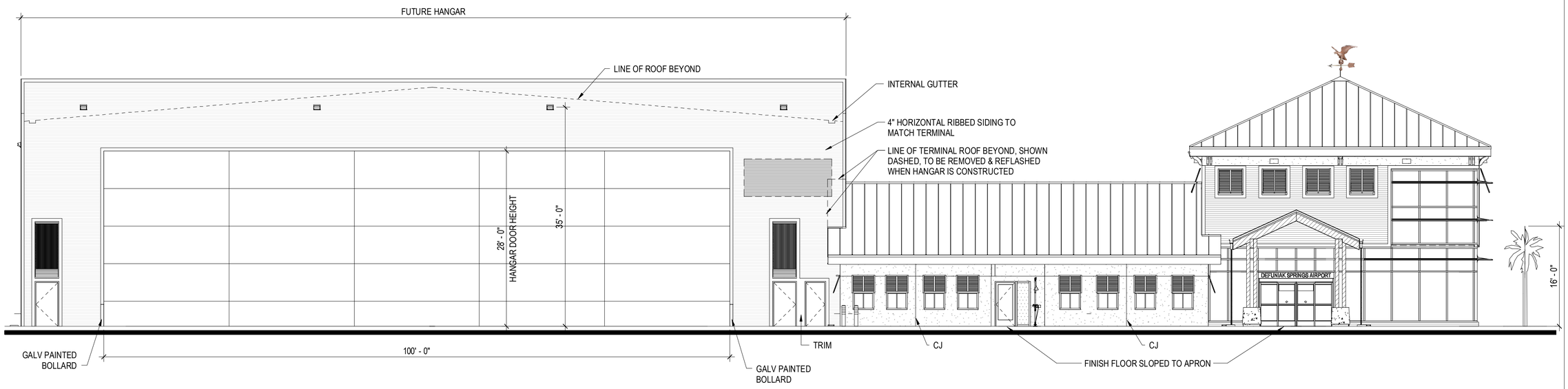

2 OVERALL SOUTH ELEVATION

SCALE:1 : 100

FOR PERMIT & BIDDING ONLY

AVCON

TRANSFORMING TODAY'S IDEAS INTO TOMORROW'S REALITY

WILLIAM A. HAYWARD JR.
FL LICENSE NO.:AR0011007

NO.	DATE	REVISION	BY

FUTURE HANGAR ELEVATIONS

100% DESIGN DRAWINGS

AIRPORT TERMINAL AND HANGAR DEVELOPMENT

PREPARED FOR

DEFUNIAK SPRINGS MUNICIPAL AIRPORT

DESIGNED BY:	CH
DRAWN BY:	DT
CHECKED BY:	DT
APPROVED BY:	WAH
PROJECT NO:	176232
DATE:	11/1/2021

SHEET NUMBER

HA-201

THIS DOCUMENT CONTAINS PRIVILEGED AND PROPRIETARY INFORMATION, ALL OF WHICH IS EXPRESSLY PROVIDED BY AVCON, INC., FOR USE BY THE INTENDED RECIPIENT, AND FOR A SPECIFIC PURPOSE. WITHOUT THE EXPRESS WRITTEN CONSENT OF AVCON, INC., ANY DISTRIBUTION, REPRODUCTION, OR OTHER USE OF THIS DOCUMENT, IN WHOLE OR IN PART, IS STRICTLY PROHIBITED.

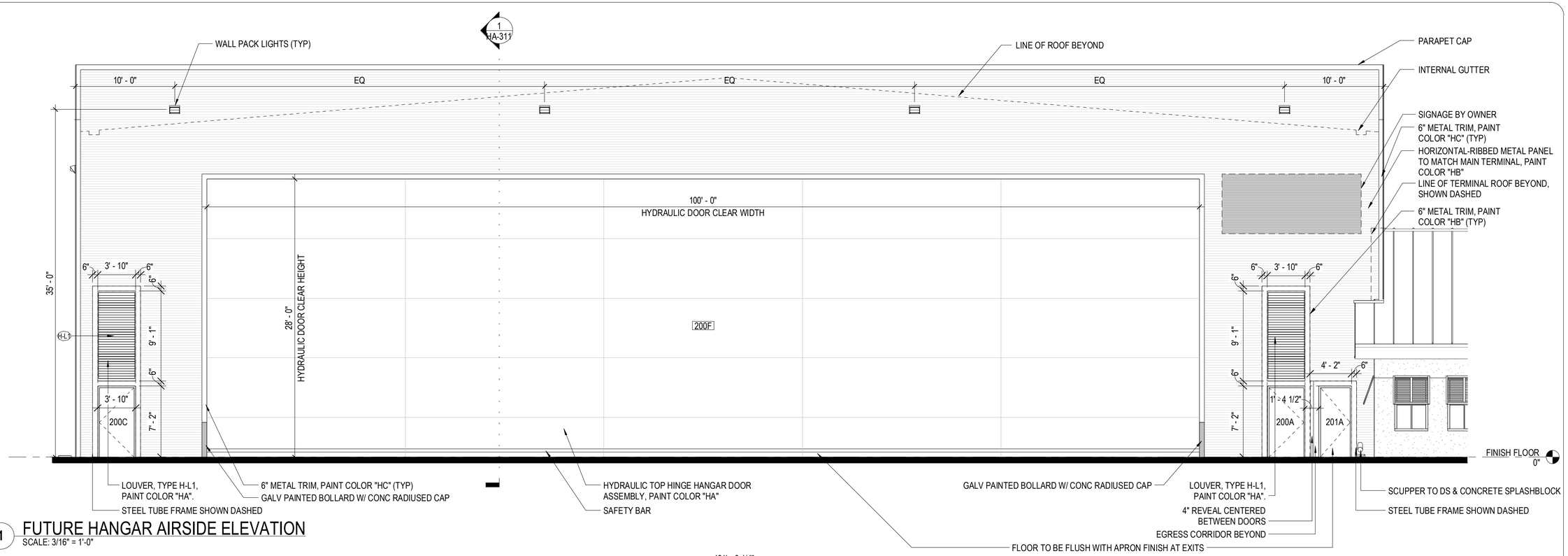

1 FUTURE HANGAR AIRSIDE ELEVATION

SCALE: 3/16" = 1'-0"

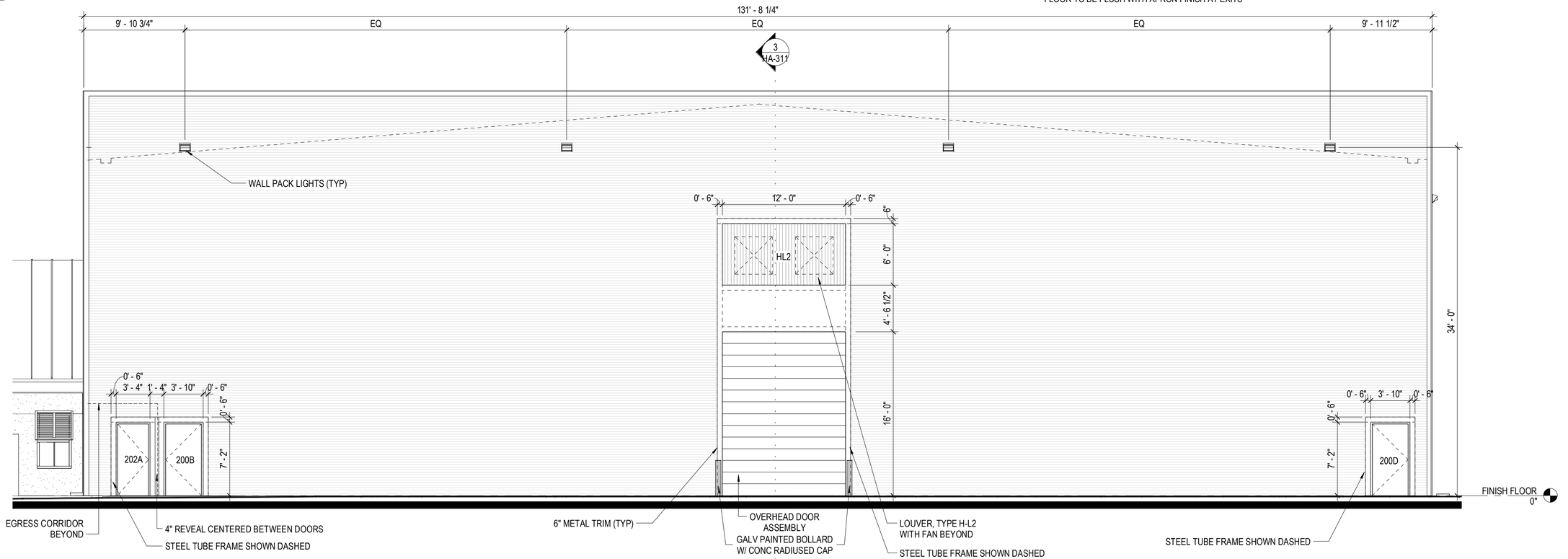

2 FUTURE HANGAR LANDSIDE ELEVATION

SCALE: 3/16" = 1'-0"

FOR PERMIT & BIDDING ONLY

AVCON

TRANSFORMING TODAY'S IDEAS INTO TOMORROW'S REALITY

WILLIAM A. HAYWARD JR.
FL LICENSE NO.:AR0011007

NO.	DATE	REVISION	BY

FUTURE HANGAR ELEVATIONS

100% DESIGN DRAWINGS

AIRPORT TERMINAL AND HANGAR DEVELOPMENT

PREPARED FOR

DEFUNIAK SPRINGS MUNICIPAL AIRPORT

DESIGNED BY:	CH
DRAWN BY:	MW
CHECKED BY:	DT
APPROVED BY:	WAH
PROJECT NO:	176232
DATE:	11/1/2021

SHEET NUMBER

HA-202

THIS DOCUMENT CONTAINS PRIVILEGED AND PROPRIETARY INFORMATION, ALL OF WHICH IS EXPRESSLY PROVIDED BY AVCON, INC., FOR USE BY THE INTENDED RECIPIENT, AND FOR A SPECIFIC PURPOSE WITHOUT THE EXPRESS WRITTEN CONSENT OF AVCON, INC. ANY DISTRIBUTION, REPRODUCTION, OR OTHER USE OF THIS DOCUMENT, IN WHOLE OR IN PART, IS STRICTLY PROHIBITED.

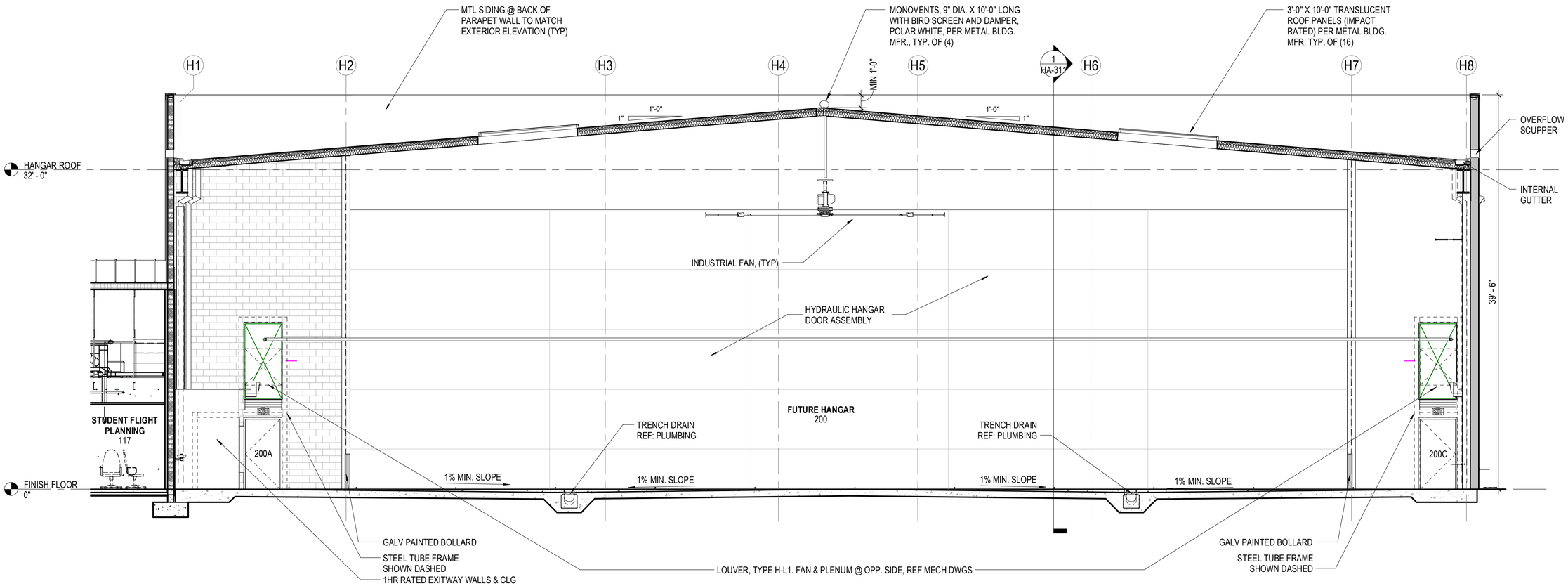

1 FUTURE HANGAR BUILDING SECTION

SCALE: 3/16" = 1'-0"

FOR PERMIT & BIDDING ONLY

AVCON

TRANSFORMING TODAY'S IDEAS INTO TOMORROW'S REALITY

WILLIAM A. HAYWARD JR.
FL LICENSE NO.:AR0011007

NO.	DATE	REVISION	BY

FUTURE HANGAR SECTION

100% DESIGN DRAWINGS

AIRPORT TERMINAL AND HANGAR DEVELOPMENT

PREPARED FOR

DEFUNIAK SPRINGS MUNICIPAL AIRPORT

DESIGNED BY:	CH
DRAWN BY:	DN
CHECKED BY:	DT
APPROVED BY:	WAH
PROJECT NO:	176232
DATE:	11/1/2021

SHEET NUMBER

HA-301

THIS DOCUMENT CONTAINS PRIVILEGED AND PROPRIETARY INFORMATION, ALL OF WHICH IS EXPRESSLY PROVIDED BY AVCON, INC., FOR USE BY THE INTENDED RECIPIENT, AND FOR A SPECIFIC PURPOSE. WITHOUT THE EXPRESS WRITTEN CONSENT OF AVCON, INC., ANY DISTRIBUTION, REPRODUCTION, OR OTHER USE OF THIS DOCUMENT, IN WHOLE OR IN PART, IS STRICTLY PROHIBITED.

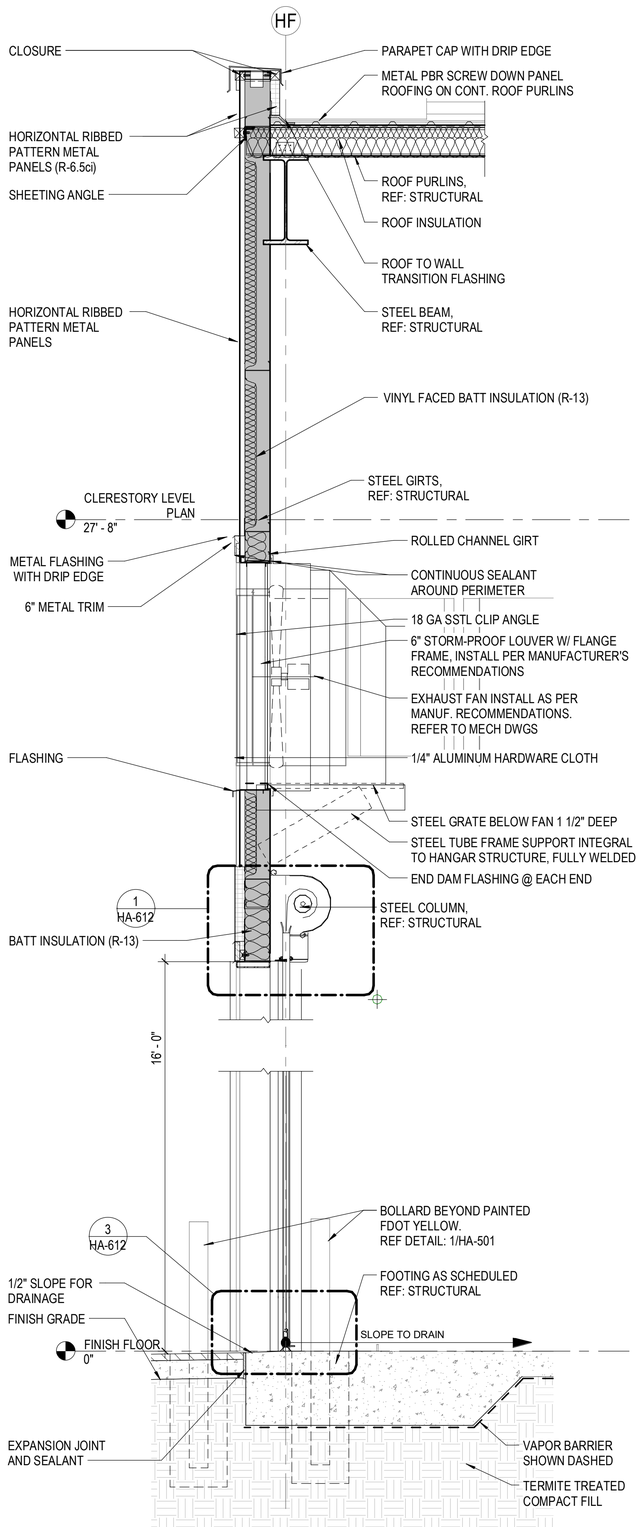

3 FUTURE HANGAR WALL SECTION_3
SCALE: 1/2" = 1'-0" REF DETAIL 1 THIS SHEET FOR BALANCE OF NOTES.

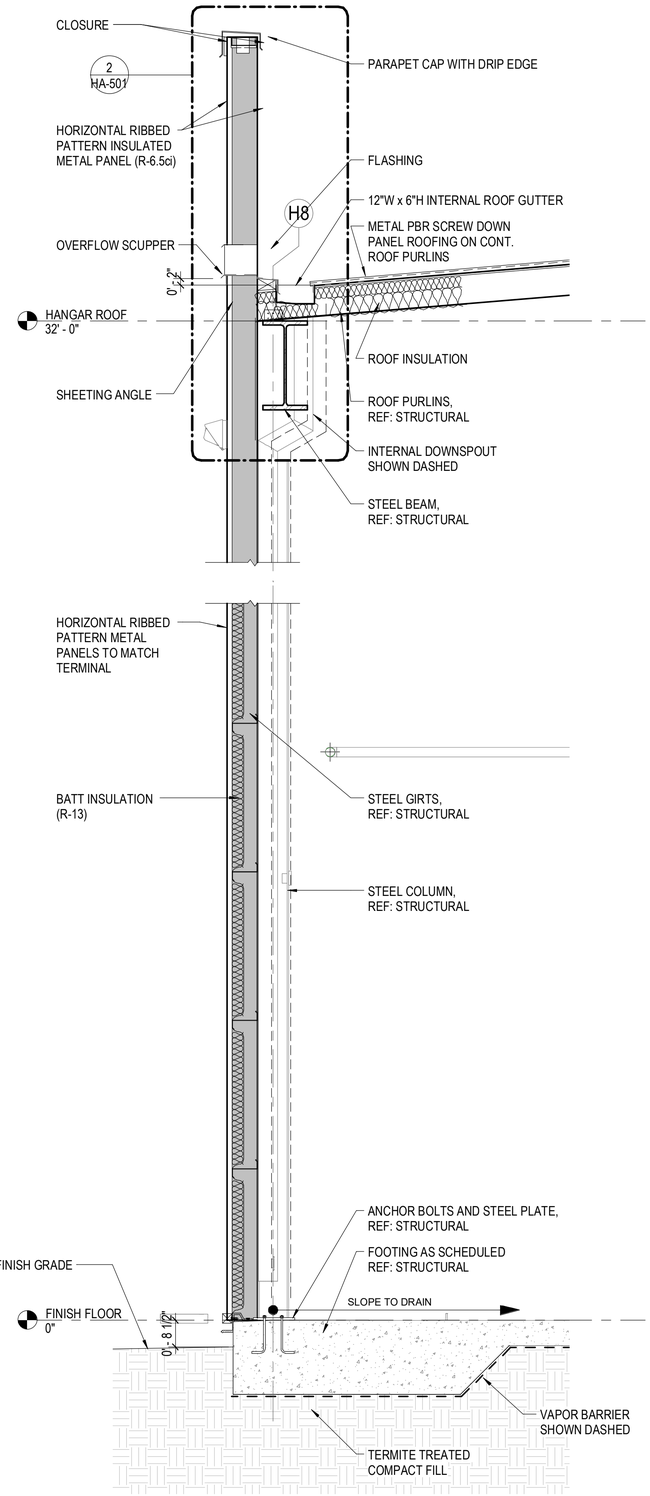

2 FUTURE HANGAR WALL SECTION_2
SCALE: 1/2" = 1'-0" REF DETAIL 1 THIS SHEET FOR BALANCE OF NOTES.

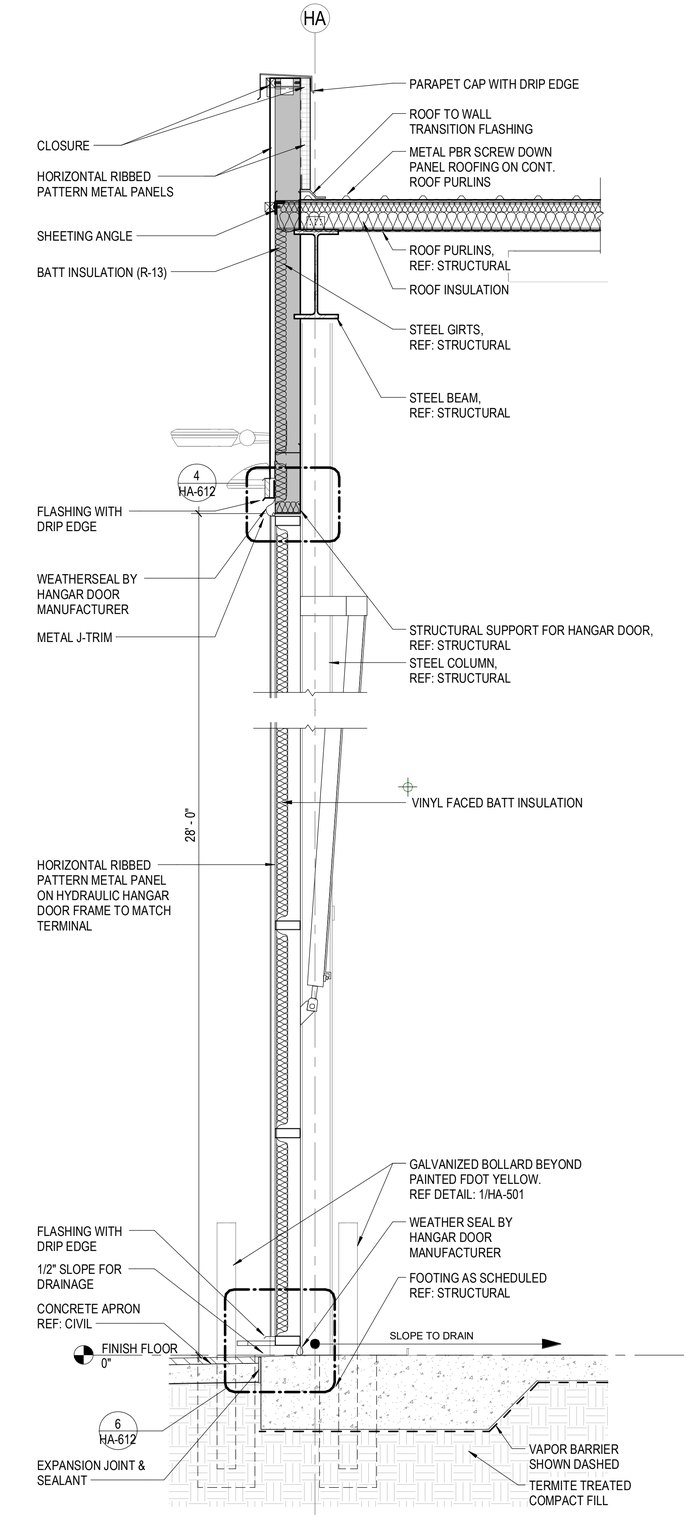

1 FUTURE HANGAR WALL SECTION_1
SCALE: 1/2" = 1'-0"

FOR PERMIT & BIDDING ONLY

AVCON
TRANSFORMING TODAY'S IDEAS INTO TOMORROW'S REALITY

WILLIAM A. HAYWARD JR.
FL LICENSE NO.:AR0011007

NO.	DATE	REVISION	BY

FUTURE HANGAR WALL SECTIONS

100% DESIGN DRAWINGS

AIRPORT TERMINAL AND HANGAR DEVELOPMENT

PREPARED FOR
DEFUNIAK SPRINGS MUNICIPAL AIRPORT

DESIGNED BY:	CH
DRAWN BY:	DN
CHECKED BY:	DT
APPROVED BY:	WAH
PROJECT NO:	176232
DATE:	11/1/2021

SHEET NUMBER

HA-311

THIS DOCUMENT CONTAINS PRIVILEGED AND PROPRIETARY INFORMATION, ALL OF WHICH IS EXPRESSLY PROVIDED BY AVCON, INC., FOR USE BY THE INTENDED RECIPIENT, AND FOR A SPECIFIC PURPOSE, WITHOUT THE EXPRESS WRITTEN CONSENT OF AVCON, INC. ANY DISTRIBUTION, REPRODUCTION, OR OTHER USE OF THIS DOCUMENT, IN WHOLE OR IN PART, IS STRICTLY PROHIBITED.

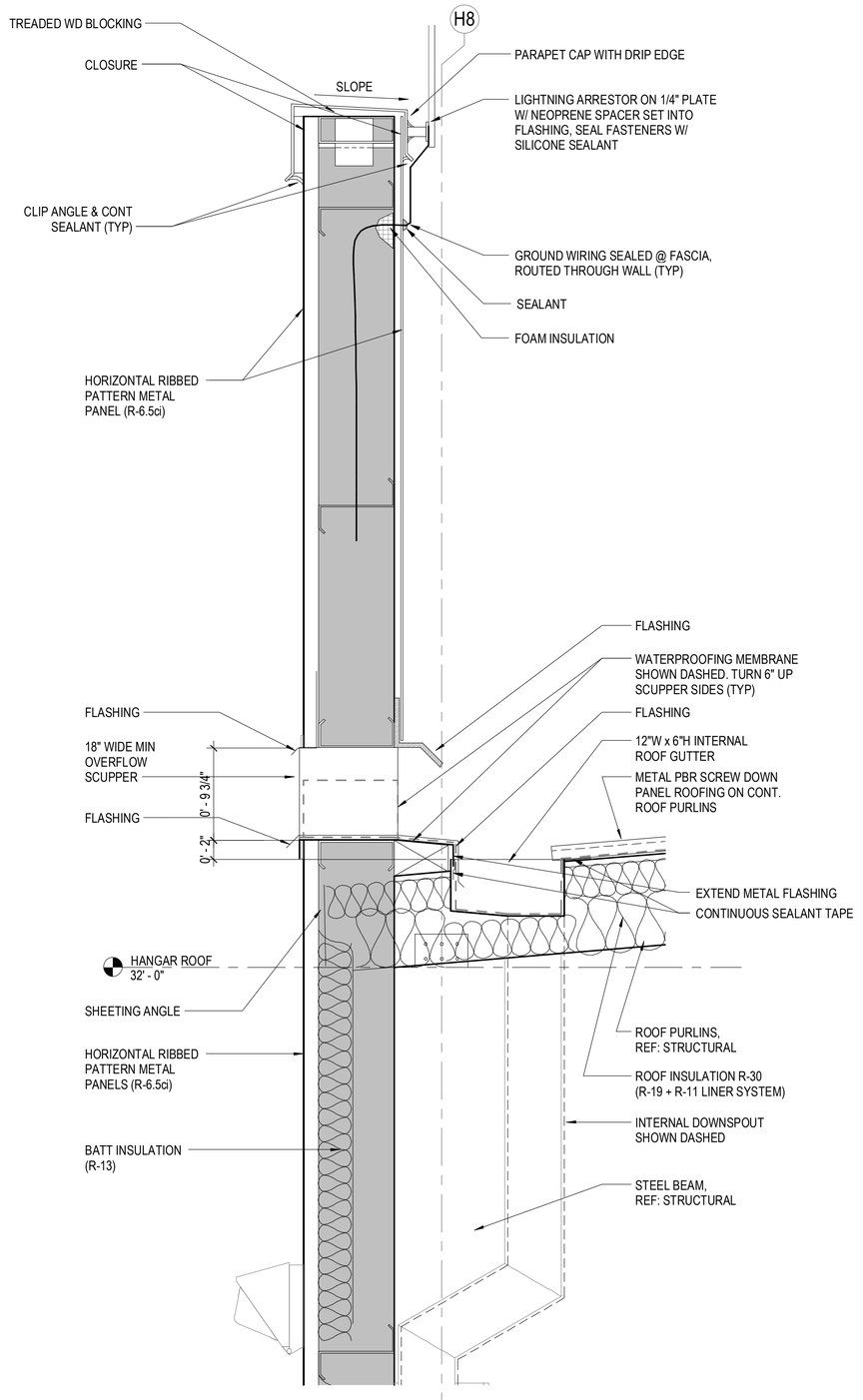

2 FUTURE HANGAR PARAPET DETAIL
SCALE: 1 1/2" = 1'-0"

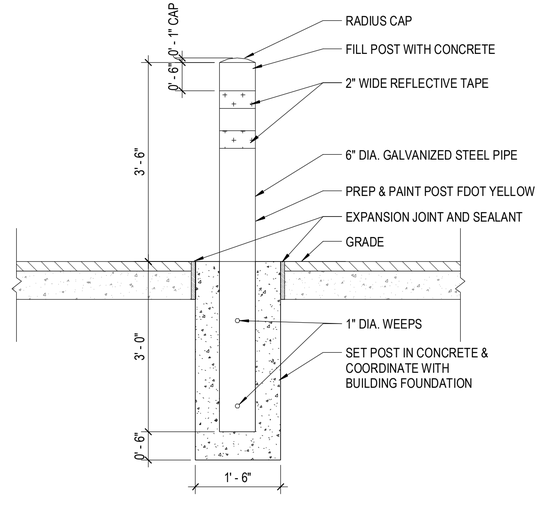

1 TYPICAL PIPE BOLLARD DETAIL
SCALE: 3/4" = 1'-0"

FOR PERMIT & BIDDING ONLY

AVCON
TRANSFORMING TODAY'S IDEAS INTO TOMORROW'S REALITY

WILLIAM A. HAYWARD JR.
FL LICENSE NO.:AR0011007

NO.	DATE	REVISION	BY

FUTURE HANGAR DETAILS

100% DESIGN DRAWINGS

AIRPORT TERMINAL AND HANGAR DEVELOPMENT

PREPARED FOR
DEFUNIAK SPRINGS MUNICIPAL AIRPORT

DESIGNED BY:	CH
DRAWN BY:	DN
CHECKED BY:	DT
APPROVED BY:	WAH
PROJECT NO:	176232
DATE:	11/1/2021

SHEET NUMBER

HA-501

THIS DOCUMENT CONTAINS PRIVILEGED AND PROPRIETARY INFORMATION, ALL OF WHICH IS EXPRESSLY PROVIDED BY AVCON, INC., FOR USE BY THE INTENDED RECIPIENT, AND FOR A SPECIFIC PURPOSE. WITHOUT THE EXPRESS WRITTEN CONSENT OF AVCON, INC. ANY DISTRIBUTION, REPRODUCTION, OR OTHER USE OF THIS DOCUMENT, IN WHOLE OR IN PART, IS STRICTLY PROHIBITED.

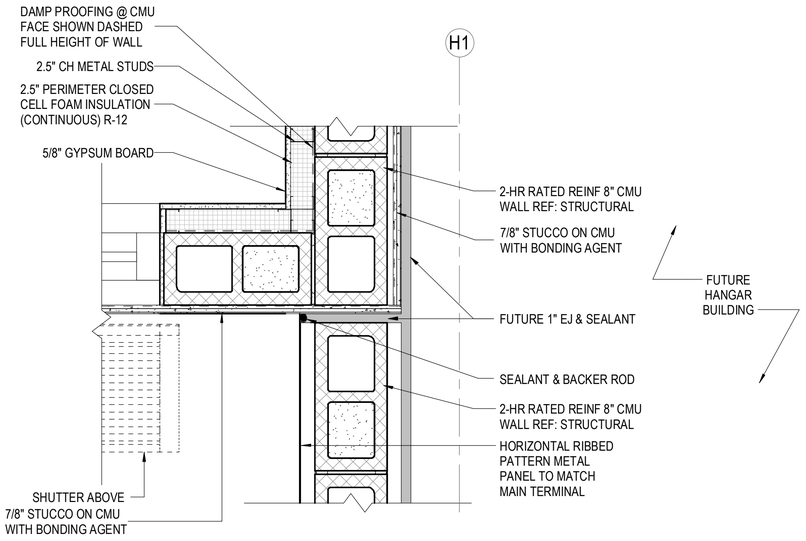

2 TERMINAL & FUTURE HANGAR DETAIL

SCALE: 1 1/2" = 1'-0"

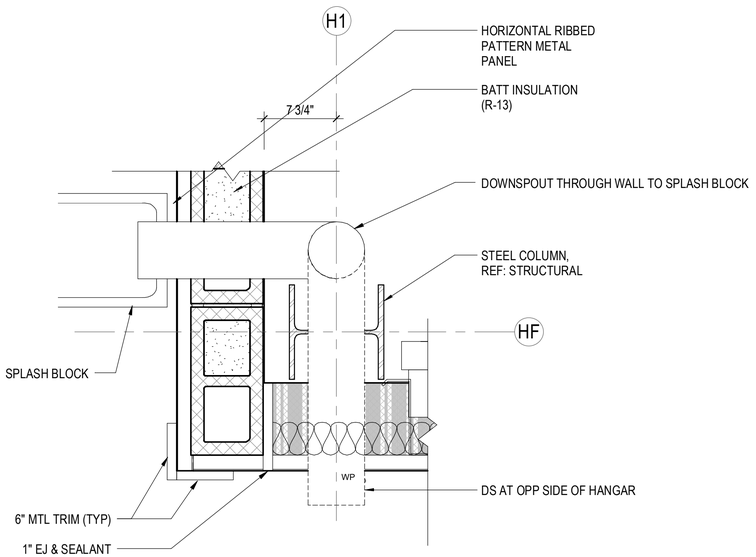

1 FUTURE HANGAR CORNER DETAIL (TYP)

SCALE: 1 1/2" = 1'-0"

FOR PERMIT & BIDDING ONLY

AVCON

TRANSFORMING TODAY'S IDEAS INTO TOMORROW'S REALITY

WILLIAM A. HAYWARD JR.
FL LICENSE NO.:AR0011007

NO.	DATE	REVISION	BY

FUTURE HANGAR DETAILS

100% DESIGN DRAWINGS

AIRPORT TERMINAL AND HANGAR DEVELOPMENT

PREPARED FOR

DEFUNIAK SPRINGS MUNICIPAL AIRPORT

DESIGNED BY:	Designer
DRAWN BY:	Author
CHECKED BY:	Checker
APPROVED BY:	WAH
PROJECT NO:	176232
DATE:	11/1/2021

SHEET NUMBER

HA-502

THIS DOCUMENT CONTAINS PRIVILEGED AND PROPRIETARY INFORMATION, ALL OF WHICH IS EXPRESSLY PROVIDED BY AVCON, INC., FOR USE BY THE INTENDED RECIPIENT, AND FOR A SPECIFIC PURPOSE. WITHOUT THE EXPRESS WRITTEN CONSENT OF AVCON, INC. ANY DISTRIBUTION, REPRODUCTION, OR OTHER USE OF THIS DOCUMENT, IN WHOLE OR IN PART, IS STRICTLY PROHIBITED.

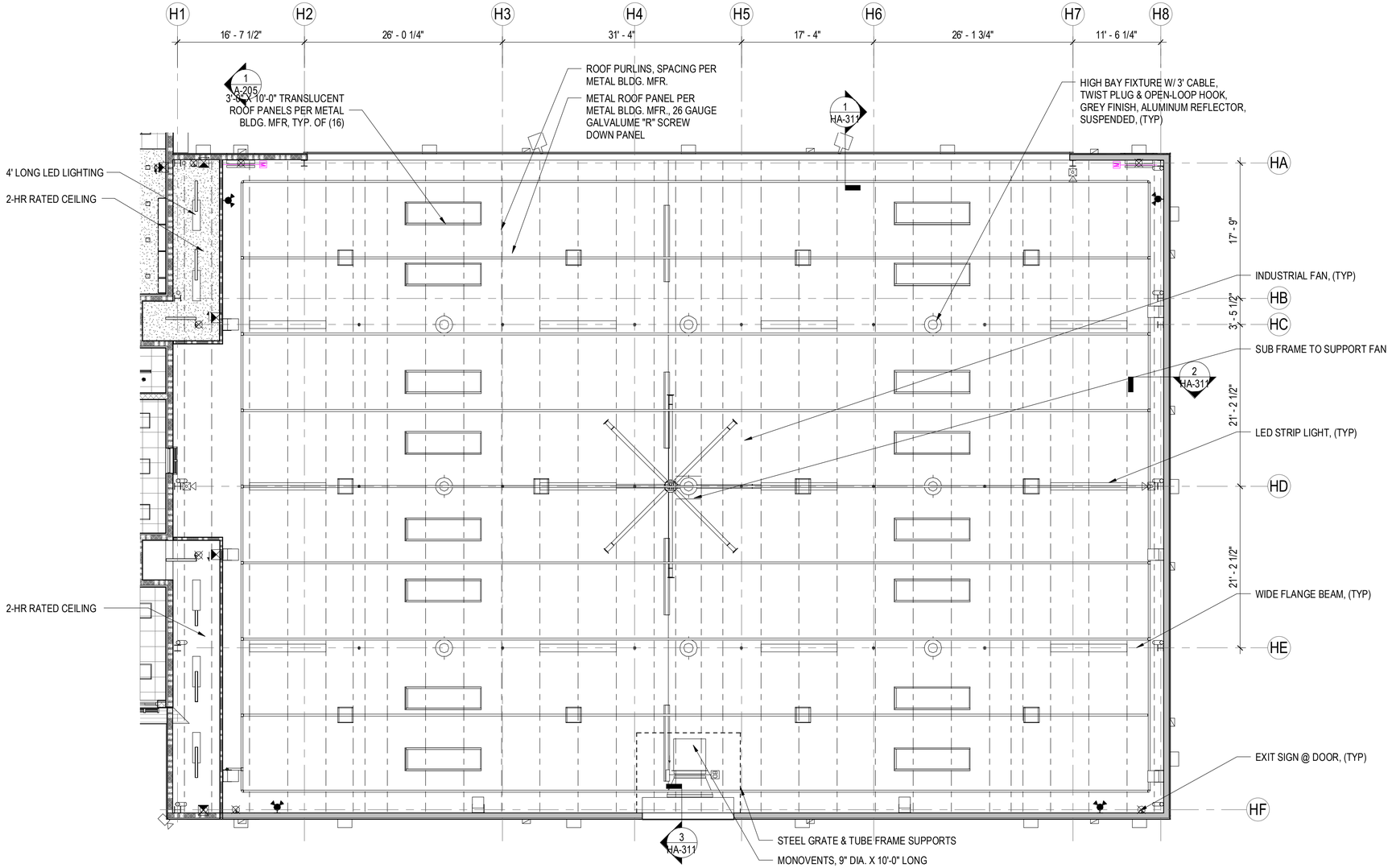

1 REFLECTED CEILING PLAN - FUTURE HANGAR
SCALE: 1/8" = 1'-0"

GENERAL NOTES

1. INTERIOR CEILING DIMENSIONS ARE CLEAR FINISH DIMENSIONS MEASURED FROM THE FLOOR WITHIN THAT SPACE UNLESS OTHERWISE NOTED. CONTRACTOR SHALL VERIFY ALL DIMENSIONS AND NOTIFY ARCHITECT OF ANY CONFLICTS.

2. SMOOTH FINISH AND PAINT ALL GYPSUM BOARD SOFFITS AND CEILINGS.

3. PAINT ALL EXPOSED DUCTWORK, STRUCTURAL AND MISC. STEEL, FRAMING, DECKING, PIPING, CONDUIT, ETC. COORDINATE SPECIFIC COLOR REQUIREMENTS WITH OWNER PRIOR TO PAINTING.
   - SPRINKLER SYSTEM PIPING SHALL BE RED;
   - COMPRESSED AIR PIPING SHALL BE BLUE;
   - GAS PIPING SHALL BE YELLOW;
   - OTHER PIPING/CONDUIT MATCH ADJACENT SURFACES.

4. CENTER ALL RECESSED LIGHTS, SPRINKLER HEADS AND OTHER ITEMS IN ACOUSTICAL CEILING PANEL/TILE AND IN SOFFITS UNLESS OTHERWISE NOTED.

REFLECTED CEILING PLAN LEGEND

- 5/8" GYPSUM BOARD CEILING (PAINTED)
- 2' x 4' LAY-IN CEILING LIGHT FIXTURES (SEE ELECTRICAL DWGS) /SUSPENDED GRID SYSTEM
- 1' x 4' RECESSED LIGHT FIXTURES
- SUSPENDED LIGHT FIXTURE
- EXIT LIGHT
- WALL MOUNTED LIGHT FIXTURE
- INCANDESCENT SURFACE MOUNTED
- CEILING/RECESSED EXHAUST FAN -SEE MECHANICAL DWGS.
- EXPOSED LIGHT FIXTURE
- SUSPENDED LIGHT FIXTURES W/ PROTECTIVE WIRE CHAIN
- FIRE RATE WALL - SEE LIFE SAFETY PLAN
- PRE-FIN. METAL VENTED SOFFIT PANELS, BY METAL BLDG. MFR.

FOR PERMIT & BIDDING ONLY

AVCON
TRANSFORMING TODAY'S IDEAS INTO TOMORROW'S REALITY

THIS DOCUMENT CONTAINS PRIVILEGED AND PROPRIETARY INFORMATION, ALL OF WHICH IS EXPRESSLY PROVIDED BY AVCON, INC., FOR USE BY THE INTENDED RECIPIENT, AND FOR A SPECIFIC PURPOSE. WITHOUT THE EXPRESS WRITTEN CONSENT OF AVCON, INC. ANY DISTRIBUTION, REPRODUCTION, OR OTHER USE OF THIS DOCUMENT, IN WHOLE OR IN PART, IS STRICTLY PROHIBITED.

WILLIAM A. HAYWARD JR.
FL LICENSE NO.:AR0011007

NO.	DATE	REVISION	BY

REFLECTED CEILING PLAN

100% DESIGN DRAWINGS

AIRPORT TERMINAL AND HANGAR DEVELOPMENT

PREPARED FOR
DEFUNIAK SPRINGS MUNICIPAL AIRPORT

DESIGNED BY:	CH
DRAWN BY:	MW
CHECKED BY:	DT
APPROVED BY:	WAH
PROJECT NO:	176232
DATE:	11/1/2021

SHEET NUMBER

HA-601

DOOR HANGAR BUILDING SCHEDULE

DOOR NUMBER	ROOM NAME		ROOM NUMBER	SIZE HEIGHT	SIZE WIDTH	SIZE THICKNESS	DOOR TYPE	DOOR MATERIAL	DOOR FINISH	FRAME TYPE	FRAME MATERIAL	FRAME FINISH	DETAILS HEAD	DETAILS JAMB	RATINGS FIRE	RATINGS STC	HARDWARE SET	COMMENTS
200A	FUTURE HANGAR		200	7' - 0"	3' - 6"	1 3/4"	H-A	HM	PAINTED	H-F1	HM	PAINTED	7/HA-612	8/HA-612		NA	07	SEC'D, EGRESS
200B	FUTURE HANGAR		200	7' - 0"	3' - 6"	1 3/4"	H-A	HM	PAINTED	H-F1	HM	PAINTED	7/HA-612	8/HA-612	NOT RATED	NA	07	SEC'D, EGRESS
200C	FUTURE HANGAR		200	7' - 0"	3' - 6"	1 3/4"	H-A	HM	PAINTED	H-F1	HM	PAINTED	7/HA-612	8/HA-612		NA	07	SEC'D, EGRESS
200D	FUTURE HANGAR		200	7' - 0"	3' - 6"	1 3/4"	H-A	HM	PAINTED	H-F1	HM	PAINTED	7/HA-612	8/HA-612		NA	07	SEC'D, EGRESS
200E	FUTURE HANGAR	- OVERHEAD	200	16' - 0"	12' - 0"	3"	H-B	CSI	PAINTED				1/HA-612	2/HA-612		NA	01	OVERHEAD DOOR
200F	FUTURE HANGAR	- HYDRAULIC	200	28' - 0"	100' - 0"			HM	PAINTED		HM	PAINTED	4/HA-612	5/HA-612		NA	01	HYDRAULIC DOOR
201A	EXIT CORR. A		201	7' - 0"	3' - 0"	1 3/4"	H-A	HM	PAINTED	H-F1	HM	PAINTED	7/HA-612	8/HA-612		NA	07	SEC'D, EGRESS
201B	FUTURE HANGAR		200	7' - 0"	3' - 0"	1 3/4"	H-A	HM	PAINTED	H-F1	HM	PAINTED	7/HA-612	8/HA-612	90 MIN	NA	07	SEC'D, EGRESS
202A	EXIT CORR. B		202	7' - 0"	3' - 0"	1 3/4"	H-A	HM	PAINTED	H-F1	HM	PAINTED	7/HA-612	8/HA-612	NOT RATED	NA	07	SEC'D, EGRESS
202B	FUTURE HANGAR		200	7' - 0"	3' - 0"	1 3/4"	H-A	HM	PAINTED	H-F1	HM	PAINTED	7/HA-612	8/HA-612	90 MIN	NA	07	SEC'D, EGRESS

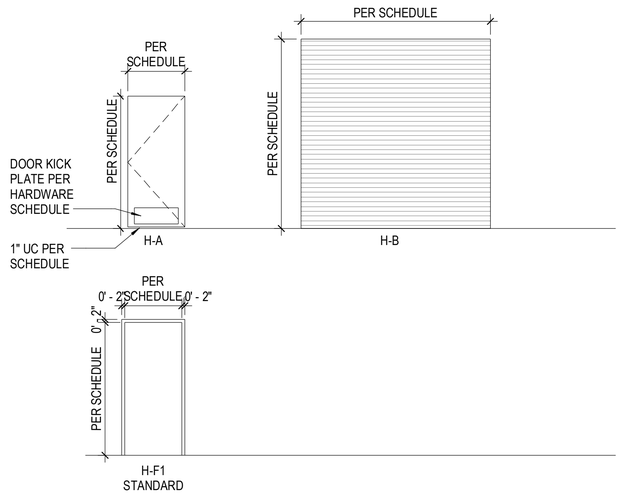

2 FUTURE HANGAR DOOR & FRAME TYPES
SCALE: 1/4" = 1'-0"

NOTES - HANGAR DOORS

1	ALL EXTERIOR DOORS TO BE IMPACT RATED
2	DELAYED EGRESS 15 SECOND AND SECURED DOORS
3	ALL EGRESS DOORS TO HAVE PANIC DEVICES
4	ALL EXTERIOR HM DOORS TO HAVE LOCK GUARDS

LEGEND - DOOR FRAME

TYPE	DESCRIPTION
-	NONE / FUTURE
AC	ACCESS CONTROL / SECURED
AL	ALUMINUM STOREFRONT
HM	HOLLOW METAL

LEGEND - DOOR TYPE

TYPE	DESCRIPTION
AA	ANOODIZED ALUMINUM
AC	ACCESS
AE	AUTOMATIC ENTRANCE
AFE	ALUMINUM-FRAMED ENTRANCE
AGE	ALL-GLASS ENTRANCE
CL	CHAIN LINK
CS	CUSTOM STEEL
CSI	CUSTOM STEEL (INSULATED)
FD	FOLDING
HM	HOLLOW METAL
HMI	HOLLOM METAL (INSULATED)
KP	KICK PLATE
SEC'D	SECURED WITH ACCESS CONTROL AND EMERGENCY PUSH BUTTON @ EGRESS DOORS
SR	SOUND RATED MIN STC RATING = 42
SRW	STILE AND RAIL WOOD
TEMP GL	TEMPERED GLAZING
UC = 1"	1" UNDER CUT
WC	WOOD CLOSET
WDHC	WOOD (HOLLOW CORE)
WDSC	WOOD (SOLID CORE)

LOUVER SCHEDULE

TYPE	DESCRIPTION
H-L1	LOUVER ABOVE MAN DOOR
H-L2	LOUVER ABOVE OVERHEAD DOOR

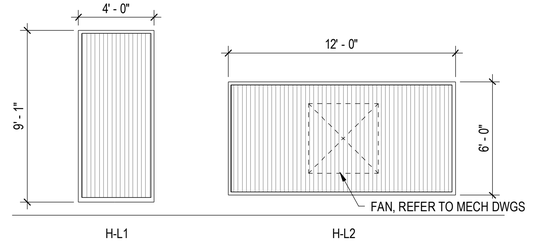

NOTE: ALL LOUVER OPENINGS TO MEET IMPACT RESISTANCE AS PER FBC 1609

1 FUTURE HANGAR LOUVER TYPES
SCALE: 1/4" = 1'-0"

FOR PERMIT & BIDDING ONLY

AVCON
TRANSFORMING TODAY'S IDEAS INTO TOMORROW'S REALITY

WILLIAM A. HAYWARD JR.
FL LICENSE NO.:AR0011007

NO.	DATE	REVISION	BY

FUTURE HANGAR DOOR SCHEDULE

100% DESIGN DRAWINGS

AIRPORT TERMINAL AND HANGAR DEVELOPMENT

PREPARED FOR
DEFUNIAK SPRINGS MUNICIPAL AIRPORT

DESIGNED BY:	CH
DRAWN BY:	DN
CHECKED BY:	DT
APPROVED BY:	WAH
PROJECT NO:	176232
DATE:	11/1/2021

SHEET NUMBER
HA-611

THIS DOCUMENT CONTAINS PRIVILEGED AND PROPRIETARY INFORMATION, ALL OF WHICH IS EXPRESSLY PROVIDED BY AVCON, INC., FOR USE BY THE INTENDED RECIPIENT, AND FOR A SPECIFIC PURPOSE. WITHOUT THE EXPRESS WRITTEN CONSENT OF AVCON, INC. ANY DISTRIBUTION, REPRODUCTION, OR OTHER USE OF THIS DOCUMENT, IN WHOLE OR IN PART, IS STRICTLY PROHIBITED.

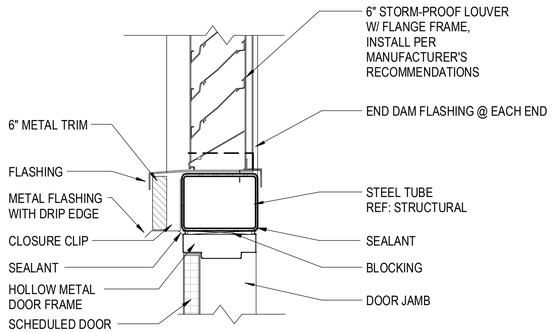

7 HH3 - HOLLOW METAL FRAME HEAD DETAIL
SCALE: 1 1/2" = 1'-0"

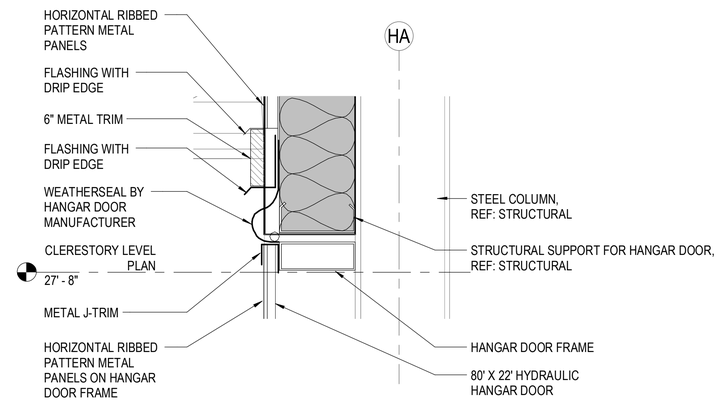

4 HH2 - FUTURE HANGAR DOOR HEAD DETAIL
SCALE: 1 1/2" = 1'-0"

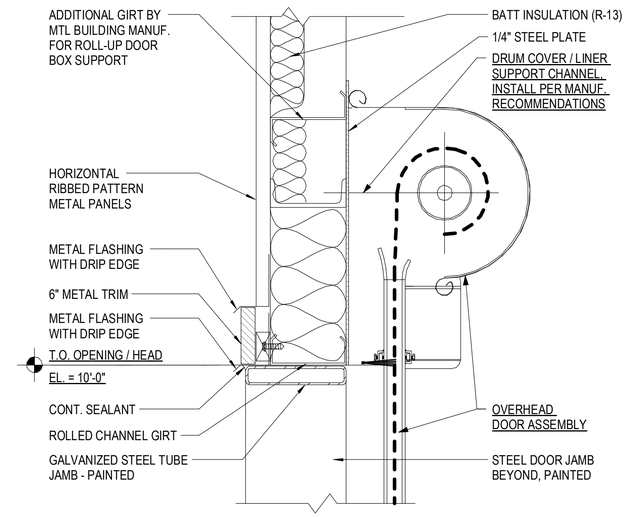

1 HH1 - OH HEAD DETAIL
SCALE: 1 1/2" = 1'-0"

8 HJ3 - HOLLOW METAL FRAME JAMB DETAIL
SCALE: 1 1/2" = 1'-0"

5 HJ2 - FUTURE HANGAR DOOR JAMB DETAIL
SCALE: 1 1/2" = 1'-0"

2 HJ1 - COILING DOOR JAMB
SCALE: 1 1/2" = 1'-0"

9 HS3 - HOLLOW METAL FRAME SILL DETAIL
SCALE: 1 1/2" = 1'-0"

6 HS2 - FUTURE HANGAR DOOR SILL DETAIL
SCALE: 1 1/2" = 1'-0"

3 HS1 - COILING DOOR SILL DETAIL
SCALE: 1 1/2" = 1'-0"

FOR PERMIT & BIDDING ONLY

AVCON
TRANSFORMING TODAY'S IDEAS INTO TOMORROW'S REALITY

WILLIAM A. HAYWARD JR.
FL LICENSE NO.:AR0011007

NO.	DATE	REVISION	BY

FUTURE HANGAR DOOR DETAILS

100% DESIGN DRAWINGS

AIRPORT TERMINAL AND HANGAR DEVELOPMENT

PREPARED FOR

DEFUNIAK SPRINGS MUNICIPAL AIRPORT

DESIGNED BY:	CH
DRAWN BY:	DN
CHECKED BY:	DT
APPROVED BY:	WAH
PROJECT NO:	176232
DATE:	11/1/2021

SHEET NUMBER

HA-612

THIS DOCUMENT CONTAINS PRIVILEGED AND PROPRIETARY INFORMATION. ALL OF WHICH IS EXPRESSLY PROVIDED BY AVCON, INC., FOR USE BY THE INTENDED RECIPIENT, AND FOR A SPECIFIC PURPOSE. WITHOUT THE EXPRESS WRITTEN CONSENT OF AVCON, INC. ANY DISTRIBUTION, REPRODUCTION, OR OTHER USE OF THIS DOCUMENT, IN WHOLE OR IN PART, IS STRICTLY PROHIBITED.

GENERAL:

1. ALL STRUCTURAL WORK SHALL BE IN ACCORDANCE WITH THE FOLLOWING MINIMUM STANDARDS:
   A. FLORIDA BUILDING CODE 2020
   B. REGULATIONS IN ACCORDANCE WITH THE LOCAL JURISDICTION.
   C. SIGNED AND SEALED PROJECT CONTRACT DOCUMENTS (INCLUDING SIGNED AND SEALED DRAWINGS BY DELEGATED ENGINEERS AND THE GEOTECHNICAL REPORT) AND LATEST ADDENDA. CONTRACT DOCUMENTS DO NOT INCLUDE SHOP DRAWINGS AND OTHER UNSEALED SUBMITTAL DOCUMENTS.
2. THE REFERENCE OF "GENERAL CONTRACTOR" WITHIN THE STRUCTURAL GENERAL NOTES INCLUDES BUT IS NOT LIMITED TO SUBCONTRACTORS, ERECTORS, FABRICATORS, MATERIAL SUPPLIERS AND/OR INDIVIDUALS PERFORMING THE WORK.
3. THE STRUCTURAL DRAWINGS SHALL BE USED IN CONJUNCTION WITH PROJECT SPECIFICATIONS, ARCHITECTURAL, MECHANICAL, ELECTRICAL, PLUMBING, AND SITE DRAWINGS. REFER TO THESE DRAWINGS FOR DIMENSIONS, EMBEDDED ITEMS, AND OTHER DETAILS NOT SHOWN ON THE STRUCTURAL DRAWINGS. THE GENERAL CONTRACTOR SHALL REVIEW THE DRAWINGS OF ALL DISCIPLINES AND REPORT ANY DISCREPANCIES TO THE ARCHITECT OF RECORD AND STRUCTURAL ENGINEER OF RECORD IN WRITING PRIOR TO SECURING MATERIALS, FABRICATING, OR COMMENCING WORK. THE MORE STRINGENT REQUIREMENTS SHALL GOVERN UNLESS OTHERWISE STATED IN WRITING BY THE ARCHITECT OF RECORD AND STRUCTURAL ENGINEER OF RECORD.
4. DO NOT SCALE DRAWINGS.
5. THE GENERAL CONTRACTOR SHALL VERIFY ALL DIMENSIONS AND FIELD CONDITIONS PRIOR TO SECURING MATERIALS, FABRICATING, OR COMMENCING WORK.
6. NO STRUCTURAL MEMBER SHALL BE CUT, NOTCHED, OR OTHERWISE ALTERED UNLESS APPROVED IN WRITING BY THE ENGINEER OF RECORD.
7. THE STRUCTURE IS DESIGNED TO BE SELF-SUPPORTING AND STABLE AFTER ITS CONSTRUCTION IS COMPLETE. THE CONTRACT DOCUMENTS REPRESENT THE FINISHED STRUCTURE AND THEY DO NOT INDICATE THE METHOD OR MEANS OF CONSTRUCTION. THE GENERAL CONTRACTOR IS RESPONSIBLE FOR ALL MEANS AND METHODS TO ENSURE STABILITY AND SAFEKEEPING OF THE STRUCTURE AND ITS COMPONENTS DURING CONSTRUCTION AS PER THE MOST RECENT PRINTING/ERRATA OF ASCE 37-14 'DESIGN LOADS ON STRUCTURES DURING CONSTRUCTION'. THE ENGINEER DOES NOT HAVE CONTROL OF, AND SHALL NOT BE RESPONSIBLE FOR: CONSTRUCTION MEANS, METHODS, TECHNIQUES, SEQUENCES, PROCEDURES, SAFETY PRECAUTIONS, SAFETY PROGRAMS IN CONNECTION WITH THE WORK, OMISSIONS BY THE GENERAL CONTRACTOR, OR THE FAILURE OF THE GENERAL CONTRACTOR TO CARRY OUT THE WORK IN ACCORDANCE WITH THE CONTRACT DOCUMENTS.
8. DETAILS LABELED "TYPICAL" ON THE DRAWINGS SHALL APPLY TO ALL SITUATIONS OCCURRING ON THE PROJECT THAT ARE THE SAME OR SIMILAR TO THOSE SPECIFICALLY DETAILED. THE APPLICABILITY OF THE DETAIL TO ITS LOCATION ON THE PLANS CAN BE DETERMINED BY THE TITLE OF DETAIL. SUCH DETAILS SHALL APPLY WHETHER OR NOT THEY ARE KEYED IN AT EACH LOCATION. QUESTIONS REGARDING APPLICABILITY OF TYPICAL DETAILS SHALL BE DIRECTED TO THE STRUCTURAL ENGINEER OF RECORD.
9. PERIODIC, LIMITED, SITE OBSERVATION BY FIELD REPRESENTATIVES OF AVCON, INC IS SOLELY FOR THE PURPOSE OF DETERMINING IF THE CONTRACTOR'S WORK IS PROCEEDING IN ACCORDANCE WITH THE CONTRACT DOCUMENTS. SITE OBSERVATIONS SHALL NOT BE CONSTRUED AS EXHAUSTIVE OR CONTINUOUS CHECKS OF THE QUALITY OR QUANTITY OF THE WORK, BUT RATHER AS PERIODIC SPOT CHECKS OF READILY APPARENT DEFECTS OR DEFICIENCIES IN THE WORK. LIMITED SITE VISITS BY THE ENGINEER OF RECORD DO NOT RELIEVE OR TAKE THE PLACE OF SCHEDULED TESTING AND INSPECTIONS BY AUTHORIZED AGENT OR INSPECTOR.
10. ALL STRUCTURES REQUIRE PERIODIC MAINTENANCE. A PLANNED MAINTENANCE PROGRAM SHALL BE ESTABLISHED BY THE OWNER AND SHALL INCLUDE ITEMS SUCH AS, BUT NOT LIMITED TO:
    A. PROTECTIVE COATINGS FOR STEEL AND SEALANTS FOR CRACKED CONCRETE SURFACES
    B. SEALANTS WITHIN EXPANSION AND CONTROL JOINTS
    C. GENERAL CLEANING OF EXPOSED STRUCTURAL ELEMENTS TO HARSH ENVIRONMENTS OR CHEMICALS
11. THE USE OF REPRODUCTION OF THESE CONTRACT DOCUMENTS AND/OR USE OF CAD FILES BY THE GENERAL CONTRACTOR IN LIEU OF PREPARATION OF SHOP DRAWINGS SIGNIFY HIS ACCEPTANCE OF ALL INFORMATION SHOWN HEREIN AS CORRECT, AND OBLIGATES HIMSELF TO ANY JOB EXPENSE, REAL OR IMPLIED, ARISING DUE TO ANY ERRORS THAT MAY OCCUR.
12. THE GENERAL CONTRACTOR SHALL PROTECT EXISTING FACILITIES, STRUCTURES, AND UTILITIES FROM DAMAGE. INFORMATION SHOWN RELATED TO EXISTING STRUCTURES WAS GATHERED FROM DRAWINGS PREVIOUSLY PREPARED FOR _____ BY _____ DATED ___/___/___. THE STRUCTURAL DRAWINGS ASSUME THAT THE CONSTRUCTION OF EXISTING STRUCTURES WERE PERFORMED IN ACCORDANCE WITH THE PREVIOUSLY PREPARED DRAWINGS INCLUDING, BUT NOT LIMITED TO, DIMENSIONS, ELEVATIONS, MEMBER SIZES, MATERIALS, DETAILS, ETC. IT SHALL BE THE RESPONSIBILITY OF THE GENERAL CONTRACTOR TO VERIFY THE EXISTING CONDITIONS AND NOTIFY THE ARCHITECT OF RECORD AND STRUCTURAL ENGINEER OF RECORD OF ANY DISCREPANCIES IN WRITING IMMEDIATELY.
13. THE GENERAL CONTRACTOR IS REQUIRED TO PERFORM HIS WORK IN A MANNER WHICH MINIMIZES CONFLICT WITH THE OPERATIONS OF THE FACILITY DURING THE COURSE OF THE PROJECT AND TO TAKE ALL PRECAUTIONS TO MINIMIZE VIBRATION, NOISE, DUST AND DEBRIS IN ALL AREAS ADJACENT TO AREAS OF WORK.
14. STRUCTURAL WORK SHALL BE INSPECTED BY QUALIFIED INSPECTORS. FIELD INSPECTION REPORTS SHALL BE FILED WITH THE STRUCTURAL ENGINEER OF RECORD WITHIN 5 DAYS OF TIME OF ACTUAL INSPECTION.
15. SUBSTITUTIONS IN ITEMS (PRODUCTS, MATERIALS, EQUIPMENT, AND INSTRUCTIONS) WITHIN THE CONTRACT DOCUMENTS FOR ANY REASON SHALL BE APPROVED BY THE ARCHITECT OF RECORD AND STRUCTURAL ENGINEER OF RECORD PRIOR TO SECURING MATERIALS, FABRICATING, OR COMMENCING WORK. THE CONTRACTOR SHALL SUBMIT REQUEST FOR SUBSTITUTION IN WRITING TO THE STRUCTURAL ENGINEER OF RECORD IMMEDIATELY UPON DISCOVERY OF NEED AND 15 DAYS PRIOR TO INITIAL LEAD TIME DATE. THE SUBSTITUTION REQUEST SHALL BE SIGNED/DATED AND INCLUDE, AT MINIMUM, THE FOLLOWING:
    A. THE ITEM TO BE SUBSTITUTED WITH CLEAR REFERENCE TO THE INTENDED USE IN THE STRUCTURAL SPECIFICATIONS AND DRAWINGS
    B. REASONS FOR SUBSTITUTION INCLUDING CHANGES TO CONTRACT COST AND SCHEDULE
    C. MANUFACTURER TECHNICAL PRODUCT DATA SHEETS, TEST REPORTS FOR THE SUBSTITUTION ITEM
    D. A STATEMENT OF ITEM'S COMPLIANCE WITH THE FLORIDA BUILDING CODE
    E. A STATEMENT OF ITEM'S COMPATIBILITY WITH OTHER PORTIONS OF WORK
16. THE GENERAL CONTRACTOR SHALL MAINTAIN, IN GOOD ORDER WITH ALL CHANGES RECORDED AS THEY OCCUR DURING CONSTRUCTION, AS-BUILT DRAWINGS AT THE SITE FOR THE OWNER CONSISTING OF ONE COLLECTIVE COPY OF THE FOLLOWING:
    A. ALL DRAWINGS
    B. ALL SPECIFICATIONS
    C. ALL ADDENDA
    D. ALL APPROVED SHOP DRAWINGS
    E. ALL APPROVED SETTING DRAWINGS
    F. ALL CHANGE ORDERS AND OTHER MODIFICATIONS

    THESE SHALL BE AVAILABLE TO THE ARCHITECT OF RECORD, ENGINEER OF RECORD, OWNER, OWNER AUTHORIZED REPRESENTATIVE, AND PROJECT INSPECTOR. THE DRAWINGS SHALL BE NEATLY AND CLEARLY MARKED DURING CONSTRUCTION TO RECORD ALL VARIATIONS MADE DURING CONSTRUCTION. UPON COMPLETION OF THE WORK AND PRIOR TO THE FINAL INSPECTION, THE CONTRACTOR SHALL DELIVER ONE COMPLETE SET OF AS-BUILT DRAWINGS TO THE ARCHITECT OF RECORD AND ENGINEER OF RECORD, FOR PREPARATION OF THE RECORD DRAWINGS.

GEOTECHNICAL:

1. REFER TO THE LATEST EDITION OF THE GEOTECHNICAL REPORT FOR RECOMMENDATIONS AND INSTALLATION PROCEDURES. SITE PREPARATION AND FOUNDATION INSTALLATION SHALL COMPLY WITH:
   A. REPORT No. 1011-2020054
   B. PREPARED BY: NOVA
   C. DATED: MAY 29, 2020
2. VERIFICATION THAT THE COMPACTION REQUIREMENTS HAVE BEEN MET SHALL BE MADE BY THE GEOTECHNICAL CONSULTANT PRIOR TO PLACING FOUNDATIONS AND SLABS. LOCATIONS FAILING TO MEET THE REQUIREMENTS SHALL BE RECOMPACTED AND RETESTED AT THE CONTRACTORS EXPENSE AND AS DIRECTED BY THE GEOTECHNICAL CONSULTANT.

SHALLOW FOUNDATIONS:

1. SHALLOW FOUNDATION DESIGN IS BASED ON AN ALLOWABLE SOIL BEARING PRESSURE OF 1500 PSF AS PER THE REFERENCED GEOTECHNICAL REPORT.
2. NO CONCRETE SHALL BE PLACED IN WATER. CONTRACTOR SHALL SAFEGUARD AND PROTECT ALL EXCAVATIONS AND SHALL KEEP THEM FREE OF WATER. GROUND WATER MUST BE MAINTAINED AT A MINIMUM OF 2 FT. BELOW BOTTOM OF EXCAVATION AT ALL TIMES DURING CONSTRUCTION.
3. LOCATE ALL EXISTING UTILITIES IN THE CONSTRUCTION AREA PRIOR TO EXCAVATION AND AVOID DAMAGE TO THEM. CONTRACTOR SHALL BE RESPONSIBLE FOR REPAIR OF ANY AND ALL DAMAGED UTILITIES CAUSED IN CONSTRUCTION TO THE SATISFACTION OF THE LOCAL BUILDING OFFICIALS AND/OR OWNER.
4. BACKFILLING AGAINST FOUNDATION WALLS SHALL NOT BE DONE UNTIL WALL HAS BEEN CURED TO A SUFFICIENT STRENGTH (7 DAYS MINIMUM), AND WALLS ARE PROPERLY SHORED OR BRACED. USE MECHANICAL TAMPERS OR OTHER APPROVED HAND TAMPERS WITHIN FIVE FEET OF THE PERIMETER FOR ALL CONCRETE STRUCTURES AND BURIED STRUCTURES TO WITHIN 18 INCH COVERAGE.
5. CENTER ALL FOOTINGS UNDER THEIR RESPECTIVE COLUMNS OR WALLS WITHIN ±2", UNO.
6. COORDINATE BURIED PLUMBING AND OTHER UTILITY LINES WITH FOOTING LOCATIONS FOR INTERFERENCE AS PER THE TYPICAL CONDUIT PENETRATION AT FOOTING DETAIL. WITH PRIOR WRITTEN APPROVAL OF THE ENGINEER OF RECORD, WALL FOOTINGS MAY BE STEPPED AND ISOLATED COLUMN FOOTINGS MAY BE DROPPED AS IN ACCORDANCE WITH THE TYPICAL WALL STEP FOOTING DETAIL.
7. EXCAVATING UNDER OR NEAR IN-PLACE FOUNDATIONS WHICH DISTURBS THE COMPACTED SOIL BENEATH SHALL NOT BE PERMITTED. TRENCH EXCAVATIONS WITHIN THE 45 DEGREE LOAD INFLUENCE WIDTH ALONG FOUNDATIONS ARE PROHIBITED.
8. CONSTRUCTION JOINTS IN CONTINUOUS FOOTINGS SHALL TERMINATE IN A VERTICAL CONCRETE FACE WITH A HORIZONTAL FORMED KEYWAY (2x4). CONTINUE REINFORCING THROUGH THE CONSTRUCTION JOINT.
9. SECURE ALL WALL AND COLUMNS DOWELS, ANCHOR RODS, AND OTHER EMBEDDED COMPONENTS INTO PROPER PLACE WITHIN FOOTINGS. DO NOT WET-SET THEM INTO NEWLY POURED CONCRETE.

CAST-IN-PLACE CONCRETE:

1. ALL CAST-IN-PLACE CONCRETE WORK SHALL BE IN ACCORDANCE WITH THE MOST RECENT PRINTING/ERRATA OF ACI 318-14 'BUILDING CODE REQUIREMENTS FOR STRUCTURAL CONCRETE' AND ACI 301-10 'SPECIFICATION FOR STRUCTURAL CONCRETE'.
2. STRUCTURAL CONCRETE MIX DESIGNS SHALL BE AN APPROVED COMMERCIAL MIX OF PLASTIC AND WORKABLE CONSISTENCY AT TIME OF PLACEMENT CONFORMING TO THE MINIMUM REQUIREMENTS PER THE CONCRETE MIX DESIGN SCHEDULE.
3. SUBMIT MIX DESIGN FOR ENGINEER'S APPROVAL FOR EACH CLASS WITH SPECIFIC LOCATION OF PLACEMENT INDICATED NO LATER THAN TWO WEEKS PRIOR TO SECURING CONCRETE MATERIALS. EACH MIX DESIGN SHALL INCLUDE TESTED, STATISTICAL BACK-UP DATA AS PER ACI 301. ALL MIXES SHALL COMPLY WITH THE REQUIREMENTS OF ASTM C33 FOR COURSE AGGREGATE, UNO.
4. CONCRETE WORK SHALL COMPLY WITH THE REQUIREMENTS OF ASTM C94 FOR MEASURING, MIXING, TRANSPORTING, ETC. CONCRETE BATCH TICKET SHALL BE TIME STAMPED WHEN CONCRETE IS BATCHED. ALL CONCRETE MIXES USING MAXIMUM COURSE AGGREGATE SIZE OF 3/8" (PEAROCK) SHALL CONFORM TO THE REQUIREMENTS OF ASTM C89 AND SHALL BE CONTINUOUSLY PLACED TO NOT EXCEED 50 LINEAR FEET.
5. PLACE AND CURE CONCRETE IN ACCORDANCE WITH ACI STANDARDS AND SPECIFICATIONS. DISCARD CONCRETE EXCEEDING 1-1/2 HOURS FROM THE TIME THE MIXING WATER IS ADDED AT THE BATCH PLANT UNTIL THE CONCRETE IS DEPOSITED IN ITS FINAL POSITION.
6. A CERTIFIED TESTING AGENT SHALL PERFORM INDUSTRY STANDARD TESTS SUCH AS BUT NOT LIMITED TO SLUMP, CYLINDER AND PRISM COMPRESSIVE BREAKS, UNIT WEIGHT, ETC. SLUMP TEST SAMPLES SHALL BE TAKEN AT DISCHARGE POINTS OF CONCRETE PER ASTM C143 'STANDARD TEST METHOD FOR SLUMP OF PORTLAND CEMENT CONCRETE'. WHERE NOT INCLUDED IN THE SPECIFICATIONS, COLLECT AND TEST 4 CYLINDER SETS FOR EACH COMPRESSIVE STRENGTH TEST IN CONFORMANCE WITH ASTM C39 'STANDARD TEST METHOD FOR COMPRESSIVE STRENGTH OF CYLINDRICAL CONCRETE SPECIMENS'. EACH SET OF CYLINDERS CONSIST OF ONE FIELD-CURED SET OF CYLINDERS AND ONE LABORATORY-CURED SET OF CYLINDERS. TESTS SHALL BE CONDUCTED FOR EACH CLASS AND EACH DAY PLACED AT A FREQUENCY OF EVERY 50 CUBIC YARDS. BREAK ONE SET OF CYLINDERS AT 7 DAYS, 1 SET AT 28 DAYS, AND HOLD 2 SETS IN RESERVE. BREAK RESERVE CYLINDERS AS DIRECTED BY THE ENGINEER. TESTING AGENT SHALL SUBMIT REPORTS TO THE ENGINEER WITHIN FIVE WORKING DAYS OF TEST RESULTS.
7. ANY DEVIATION OR ADDITION OF CONSTRUCTION JOINTS FROM THOSE SHOWN ON PLANS MUST BE SUBMITTED IN THE CONCRETE ERECTION OR REINFORCING STEEL SHOP DRAWINGS FOR ENGINEER'S APPROVAL.
8. FOR SHOWROOM INTERIOR SLABS ONLY: SLABS SHALL BE CURED USING A DISSIPATING CURING COMPOUND MEETING ASTM STANDARD C309 TYPE 1D AND SHALL HAVE A FUGITIVE DYE. THE COMPOUND SHALL BE PLACED AS SOON AS THE FINISHING IS COMPLETED OR AS SOON AS THE WATER HAS LEFT THE UNFINISHED CONCRETE. SCUFFED OR BROKEN AREAS IN THE CURING MEMBRANE SHALL BE RECOATED DAILY.
9. ALL TIE BEAMS (TB#) AND COLUMNS (TC#) INTEGRATED IN CMU WALLS ARE INDICATED AS NOMINAL WIDTH DIMENSIONS. ACTUAL DIMENSIONS SHALL BE THE WIDTH OF THE CMU WALL. USE METAL LATH, MORTAR, OR SPECIALTY PRODUCT TO CONFINE POURED CONCRETE AT ALL TIE BEAMS AND BOND BEAMS IN ACCORDANCE WITH ACI 530.1. USE OF SOLID METAL, FELT CAVITY CAPS, AND PAPER ARE PROHIBITED.
10. CONTRACTOR SHALL COORDINATE ALL TRADES FOR INSTALLATION OF ALL BUILT-IN WORK, SLEEVES, INSERTS, ETC. AS REQUIRED FOR THE COMPLETION OF CONSTRUCTION.
11. ALL CORNERS AND EDGES OF PERMANENTLY EXPOSED CONCRETE SHALL BE 3/4" CHAMFER, UNO.
12. ALL STRUCTURAL SLABS AND FLAT HORIZONTAL SURFACES TO REMAIN EXPOSED TO WEATHER THROUGHOUT ITS LIFETIME SHALL BE TREATED WITH A CLEAR NON-FLAMMABLE PENETRATING SILANE SEALER. PREPARE CONCRETE SURFACES AND APPLY SEALER IN ACCORDANCE WITH THE MANUFACTURER'S INSTRUCTIONS.
13. REINFORCING STEEL: REINFORCING STEEL SHALL BE ASTM A615 GRADE 60 DEFORMED BARS AND WELDED WIRE FABRIC SHALL CONFORM TO ASTM A185, FREE FROM OIL, SCALE AND RUST AND PLACED IN ACCORDANCE WITH THE TYPICAL BENDING DIAGRAM AND PLACING DETAILS OF ACI MANUAL OF STANDARD PRACTICE AND THE PROJECT SPECIFICATIONS. SUBMIT REINFORCING SHOP DRAWINGS AND OBTAIN ENGINEER'S APPROVAL PRIOR TO SECURING MATERIAL AND COMMENCING FABRICATION. SEE THE CONCRETE SCHEDULE(S) FOR ALL REQUIRED INFORMATION TO BE SHOWN ON THE BEAM REINFORCING ERECTION SHOP DRAWING SUBMITTAL.
14. PROVIDE CONCRETE COVER OVER REINFORCEMENT PER THE CONCRETE COVER SCHEDULE, UNO.
15. PROVIDE STANDARD HOOKS AT DISCONTINUOUS ENDS OF ALL TOP BARS. TOP BARS AT EXPOSED AREAS SUCH AS BALCONIES, WALKWAYS AND AS SPECIFICALLY SHOWN ON PLAN SHALL BE EPOXY COATED ACCORDING TO ASTM A775.
16. PROVIDE 48xBAR DIAMETER FOR ALL LAP SPLICES IN FOUNDATIONS AND WHERE SPECIFIED ELSEWHERE IN THE PLANS. LAP WELDED WIRE FABRIC SHEETS WITH ONE SPACE PLUS TWO INCHES.
17. PROVIDE CONTINUOUS REINFORCING OR STAGGER SPLICES WHERE POSSIBLE. DO NOT EXCEED 3" CENTER-TO-CENTER BAR SPACING OF SPLICED REINFORCING AND LOCATE SPLICE REINFORCING IN THE SAME PLANE WITH RESPECT TO THE CONCRETE ELEMENT'S CLEAR CONCRETE SURFACE.

BAR SIZE	3000 PSI	4,000 PSI AND GREATER
A. #6 AND SMALLER	58xBAR DIA	48xBAR DIA
B. #7 AND GREATER	72xBAR DIA	62xBAR DIA

CONCRETE MIX DESIGN SCHEDULE:

LOCATION	28-DAY STRENGTH	SLUMP	AGGREGATE SIZE
MASONRY FILLED CELLS	2500	8" - 11"	3/8"
LINTELS AND BOND BEAMS	2500	8" - 11"	3/8"
SLAB-ON-GRADE	3000	4" ± 1"	3/4"
SIDEWALKS	3000	4" ± 1"	3/4"
FOUNDATIONS	3000	4" ± 1"	1"
BEAMS, COLUMNS, AND WALLS	4000	5" ± 1"	3/4"
TIE BEAMS AND TIE COLUMNS	4000	6" ± 1"	3/8"

CONCRETE COVER SCHEDULE:

LOCATION	COVER
BEAMS, JOISTS, AND EXTERIOR SLABS	1 1/2"
INTERIOR SLABS	3/4"
CAST-IN-PLACE COLUMNS, PEDESTALS, AND WALLS	1 1/2"
FOUNDATIONS CAST AGAINST EARTH	3"

MASONRY:

1. ALL MASONRY WORK SHALL BE IN ACCORDANCE WITH THE MOST RECENT PRINTING/ERRATA OF TMS 402-16 'BUILDING CODE REQUIREMENTS FOR MASONRY STRUCTURES' AND TMS 602-16 'SPECIFICATION FOR MASONRY STRUCTURES'.
2. CONCRETE MASONRY UNITS (CMU): CMU SHALL MEET THE REQUIREMENTS OF ASTM C90 FOR HOLLOW LOAD BEARING CMU WITH A MINIMUM NET AREA COMPRESSIVE STRENGTH OF 2000 PSI / 3250 PSI / 4500 PSI. (FOR A CORRESPONDING COMPRESSIVE STRENGTH OF MASONRY, f'm = 2000 PSI / 2500 PSI / 3000 PSI). COMPRESSIVE STRENGTH REQUIREMENTS SHALL BE MET PER THE UNIT STRENGTH METHOD WITHIN TMS 602 OR PRISM SAMPLING AND TESTING PER ASTM C1314.
3. GROUT: GROUT SHALL CONFORM TO ASTM C476 WITH A SLUMP BETWEEN 8" AND 11", A MAXIMUM AGGREGATE SIZE OF 3/8". SUBMIT PROPOSED GROUT MIX DESIGNS FOR REVIEW PRIOR TO USE. MIX NUMBER OR OTHER POSITIVE IDENTIFICATION SHALL UNIQUELY IDENTIFY MIX. USE OF SUPERPLASTICIZER IS PROHIBITED AND SITE MIXING OF GROUT SHALL NOT BE PERMITTED. SAMPLE AND TEST GROUT IN ACCORDANCE WITH ASTM C1019.
4. MORTAR: MORTAR SHALL MEET THE REQUIREMENTS OF ASTM C270 TYPE "M" FOR MASONRY LAID BELOW GRADE AND TYPE "S" FOR ALL OTHER LOCATIONS. FULLY BED CROSS WEBS OF BLOCKS ALL AROUND CELLS TO RECEIVE GROUT. BED MORTAR THICKNESS GREATER THAN 5/8" IS PROHIBITED.
5. GROUTED CELLS: CELLS TO BE GROUT FILLED SHALL HAVE VERTICAL ALIGNMENT SUFFICIENT TO MAINTAIN A CLEAR, UNOBSTRUCTED, CONTINUOUS VERTICAL GROUT SPACE. ANY OVERHANGING MORTAR OR OTHER OBSTRUCTION OR DEBRIS SHALL BE REMOVED FROM THE INSIDES OF SUCH CELL WALLS. CMU SHALL BE MOISTENED BEFORE GROUTING CELLS. GROUT SHALL BE CONSOLIDATED AT TIME OF PLACING BY VIBRATING AND RECONSOLIDATED LATER BY VIBRATING BEFORE PLASTICITY IS LOST. USE METAL LATH OR SPECIAL UNITS OVER CELLS NOT TO BE FILLED WITH GROUT TO SUPPORT BOND BEAM. WHEN THE GROUTING IS STOPPED FOR ONE HOUR OR LONGER, HORIZONTAL CONSTRUCTION JOINTS SHALL BE MADE BY STOPPING THE POUR OF GROUT NOT LESS THAN 1 1/2" BELOW THE TOP OF THE UPPERMOST GROUTED MASONRY UNIT OR COURSE. GROUT POUR HEIGHT AND MINIMUM CELL DIMENSIONS TO RECEIVE GROUT SHALL MEET THAT PROVIDED BY THE "GROUT SPACE REQUIREMENTS" TABLE WITHIN TMS 602 WITH A MAXIMUM GROUT POUR HEIGHT OF 12 FEET. CLEANOUT OPENINGS SHALL BE PROVIDED AT THE BOTTOM OF CELLS TO BE GROUT FILLED FOR EACH POUR LIFT IN EXCESS OF 5 FEET IN HEIGHT. AFTER INSPECTION, THE CLEANOUTS SHALL BE SEALED BEFORE GROUTING. ALL CMU IN CONTACT WITH SOIL SHALL BE FILLED SOLID WITH GROUT. THE FOLLOWING LOCATIONS SHALL BE FILLED SOLID WITH GROUT AND HAVE VERTICAL REINFORCING BARS:
   A. CORNERS
   B. INTERSECTIONS OF WALLS
   C. EACH END OF WALL
   D. EACH SIDE OF WALL OPENINGS
   E. EACH SIDE OF A CONTROL OR ISOLATION JOINT
   F. EACH END OF BEAM BEARING
   G. AS INDICATED ON THE PLANS
6. VERTICAL REINFORCEMENT: VERTICAL REINFORCING STEEL SHALL BE DEFORMED BARS CONFORMING TO ASTM A615 GRADE 60. VERTICAL DOWELS AND REINFORCING SHALL BE USED TO PROVIDE CONTINUITY INTO THE STRUCTURE WITH AT LEAST 6" EMBEDMENT INTO THE TOP BOND BEAM, UNO. PROVIDE HOOKED DOWELS IN FOOTINGS FOR VERTICAL REINFORCING ABOVE. LAP SPLICES SHALL BE 48xBAR DIAMETERS. VERTICAL REINFORCEMENT SHALL BE HELD IN POSITION AT TOP AND BOTTOM AND AT INTERVALS NOT EXCEEDING 192xBAR DIAMETERS.
7. JOINT REINFORCEMENT: PROVIDE CONTINUOUS 9 GAGE GALVANIZED HORIZONTAL JOINT REINFORCING (DUR-O-WAL OR ENGINEER APPROVED SUBSTITUTION) CONFORMING TO ASTM A951 AT ALTERNATE BLOCK COURSES. PROVIDE PREFABRICATED "TEE" OR CORNER SECTIONS AT ALL INTERSECTING WALLS.
8. BOND BEAM: PROVIDE A CONCRETE BOND BEAM AT THE FOLLOWING LOCATIONS WITH CONTINUOUS REINFORCEMENT AS INDICATED IN THE BEAM SCHEDULE:
   A. TOP OF WALL OR PARAPET
   B. TOP OF OPENINGS OR DIRECTLY ABOVE LINTELS
   C. BELOW OPENINGS
   D. AT BEARING LOCATIONS
   E. AS INDICATED ON THE PLANS
9. OPENINGS: COORDINATE ALL OPENINGS WITH THE ARCHITECTURAL DRAWINGS. PROVIDE REINFORCED CONCRETE LINTELS OVER OPENINGS AS INDICATED ON THE PLANS.
10. JOINTS: REFER TO ARCHITECTURAL DRAWINGS FOR LOCATION OF ALL MASONRY JOINTS AND WATERPROOFING DETAILS. REINFORCING SHALL BE DISCONTINUOUS AT CONTROL JOINTS EXCEPT FOR BOND BEAM AND TIE BEAM REINFORCEMENT AS SPECIFIED ON PLAN. REINFORCING SHALL BE DISCONTINUOUS AT ISOLATION JOINTS.
11. CMU SHALL BE LAID IN RUNNING BOND PATTERN, UNO.

FOR PERMIT & BIDDING ONLY

AVCON
TRANSFORMING TODAYS IDEAS INTO TOMORROW'S REALITY
Michael Baker INTERNATIONAL
4211 W. BOY SCOUT BLVD
SUITE 500
TAMPA, FL 33607
FLORIDA LICENSE # AA 26002484
JEFFREY YEAGER, P.E.
FL LICENSE NO.: 62853

NO.	DATE	REVISION	BY

GENERAL NOTES

100% BID DRAWINGS

AIRPORT TERMINAL AND HANGAR DEVELOPMENT

PREPARED FOR DEFUNIAK SPRINGS MUNICIPAL AIRPORT

DESIGNED BY:	AJM
DRAWN BY:	AJM
CHECKED BY:	JY
APPROVED BY:	JY
PROJECT NO:	2019.028.01
DATE:	11/1/2021

SHEET NUMBER

S1.00

THIS DOCUMENT CONTAINS PRIVILEGED AND PROPRIETARY INFORMATION, ALL OF WHICH IS EXPRESSLY PROVIDED BY AVCON, INC., FOR USE BY THE INTENDED RECIPIENT, AND FOR A SPECIFIC PURPOSE. WITHOUT THE EXPRESS WRITTEN CONSENT OF AVCON, INC. ANY DISTRIBUTION, REPRODUCTION, OR OTHER USE OF THIS DOCUMENT, IN WHOLE OR IN PART, IS STRICTLY PROHIBITED.

COLD-FORMED STEEL:

1. ALL COLD FORMED STEEL WORK SHALL BE IN ACCORDANCE WITH THE MOST RECENT PRINTING/ERRATA OF AISI S100-16 'NORTH AMERICAN SPECIFICATION FOR THE DESIGN OF COLD-FORMED STEEL STRUCTURAL MEMBERS' AND AISI S202-15 'CODE OF STANDARD PRACTICE FOR COLD-FORMED STEEL STRUCTURAL FRAMING'. SECTION PROPERTY REQUIREMENTS SHALL CONFORM TO THE MINIMUM AS IDENTIFIED BY THE MOST RECENT PRINTING/ERRATA OF THE STEEL STUD MANUFACTURERS ASSOCIATION (SSMA) PRODUCT TECHNICAL GUIDE.

2. DELEGATED ENGINEER: SUBMIT SIGNED AND SEALED DETAILED DRAWINGS AND CALCULATIONS PREPARED UNDER THE SUPERVISION OF A FLORIDA PROFESSIONAL ENGINEER FOR ARCHITECT/ENGINEER REVIEW FOR ALL COLD-FORMED STEEL FRAMING, COMPONENTS, ATTACHMENTS, FASTENERS, CLOSURES, HARDWARE, ETC. FABRICATION OF FRAMING SHALL NOT BEGIN UNTIL THE SHOP DRAWINGS AND CALCULATIONS HAVE BEEN REVIEWED AND RETURNED APPROVED. EXTERIOR AND INTERIOR LOAD BEARING COLD-FORMED STEEL MEMBERS SHALL BE AS PER THE MINIMUM SIZES SHOWN ON PLAN AND DETAILS (WHERE NOTED). REFER TO CONTRACT SPECIFICATIONS FOR APPROVED SUPPLIERS. DRAWINGS AND CALCULATIONS SHALL INCLUDE, BUT ARE NOT LIMITED TO THE FOLLOWING:
   - A. ENGINEERING ANALYSIS SHOWING LOCATION, SPAN, PITCH, CAMBER, LOADING, BEARING CONDITIONS, CONNECTIONS, MEMBER SIZES, PROPERTIES, ANY YIELD STRENGTH, MEMBER STRESSES, DEFLECTIONS FOR EACH DIFFERENT ELEMENT TYPE, CONFIGURATION, SPACING AND LAYOUT BASED ON DESIGN LOADS LISTED ON THE DRAWINGS.
   - B. ALL BRIDGING AND BRACING FOR DIAPHRAGM ACTION, CONSTRUCTION LOADS, AND ALL OTHERS, TEMPORARY AND PERMANENT LOADS.
   - C. ALL STUD TO TRACK CONNECTIONS, CLIPS, FASTENERS, BRIDGING AND RELATED ACCESSORIES TO BE DESIGNED AND DETAILED FOR ALL LOADING CONDITIONS INCLUDING NET WIND PRESSURES AND REACTIONS.
   - D. NOTE ANY PROPOSED TRUSS LAYOUT CHANGES THAT WOULD EFFECT THE LOCATION OF BEARING WALLS OR FOUNDATION DESIGN OR CONSTRUCTION.
   - E. COLD-FORMED STEEL FRAMING SYSTEM PROVIDING CONTINUOUS LOAD PATH TO STRUCTURE.

3. MATERIAL SPECIFICATION: UNLESS OTHERWISE NOTED, COLD-FORMED STEEL FRAMING MATERIALS SHALL CONFORM TO ASTM C955 AND SHALL HAVE A MINIMUM YIELD STRENGTH OF 50,000 PSI (16 GAGE AND HEAVIER) AND YIELD STRESS OF 33,000 PSI (18 GAGE AND LIGHTER). MEMBERS SHALL BE MANUFACTURED OF SHEET STEEL IN ACCORDANCE WITH ASTM A653 AND ASTM 525, G60 OR G90 GALVANIZED FINISH.

4. FRAMING: FRAMING MEMBERS SHALL BE CUT SQUARELY OR AT AN ANGLE AS REQUIRED TO FIT SQUARELY AGAINST ABUTTING MEMBERS. MEMBERS SHALL BE HELD FIRMLY IN PLACE UNTIL PROPERLY JOINED. STUDS SHALL SIT SQUARELY IN THE TOP AND BOTTOM RUNNER TRACK WITH FIRM ABUTMENT AGAINST TRACK WEBS. STUDS SHALL BE ALIGNED OR PLUMBED AND SECURELY FASTENED TO THE FLANGES OF BOTH TOP AND BOTTOM RUNNER TRACK. DO NOT SPLICE MEMBERS UNO.

5. CONNECTIONS: JOINING OF STRUCTURAL MEMBERS SHALL BE MADE WITH METAL SCREWS OR WELDING. WIRE TYING OF FRAMING MEMBERS IN STRUCTURAL APPLICATIONS SHALL NOT BE PERMITTED. ATTACHMENT OF COLLATERAL MATERIALS TO STEEL MEMBERS SHALL BE MADE WITH SELF-DRILLING METAL SCREWS OR HARDENED SCREW SHANK NAILS. METAL LATH MAY ALSO BE CONNECTED TO STEEL BY STAPLES OR OTHER FASTENERS, IF APPROVED BY THE FLORIDA BUILDING CODE.
   - A. METAL SCREWS: METAL SCREWS SHALL BE MINIMUM #12 SELF-DRILLING AND SELF-TAPPING UNO. METAL SCREWS SHALL BE CADMIUM PLATED FOR ALL EXTERIOR USES.
   - B. WELDING: WELDING SHALL BE IN ACCORDANCE WITH AWS D1.3 USING E70 ELECTRODES. ALL WELDS SHALL BE TREATED WITH A ZINC-RICH PROTECTIVE PAINT FOR CORROSION RESISTANCE.

6. DEFLECTION CRITERIA:
   - A. EXTERIOR WALLS: L/240 FOR BRITTLE FINISHES (OUT-OF-PLANE BENDING)
   - B. EXTERIOR WALLS: H/180 FOR BRITTLE FINISHES (DRIFT)
   - C. VERTICAL DEFLECTIONS SHALL BE IN ACCORDANCE WITH THE APPLICABLE BUILDING CODE.

COLD-FORMED STEEL DECK:

1. CORRUGATED STEEL DECK SHALL BE GALVANIZED (G60) TO REMAIN PERMANENTLY IN CONDITIONED SPACES, GALVANIZED (G90) TO REMAIN PERMANENTLY IN UNCONDITIONED SPACES OR PERMANENTLY EXPOSED TO WEATHER. PROVIDE DECK OF GAUGE AND DEPTH INDICATED ON THE PLANS, CONFORMING TO AISI SPECIFICATION FOR THE DESIGN OF COLD-FORMED STEEL HAVING MINIMUM YIELD STRENGTH OF 33 KSI AND MEETING THE MINIMUM PHYSICAL PROPERTIES AS FOLLOWS:

   A. COMPOSITE STEEL DECK

	DECK TYPE	DESIGN THICKNESS	MOMENT OF INERTIA I	MODULUS Sn	MODULUS Sp
a.	1.5VL20	0.0358 IN	0.186 IN^4/FT	0.231 IN^3/FT	0.224 IN^3/FT
b.	1.5VL18	0.0474 IN	0.272 IN^4/FT	0.324 IN^3/FT	0.311 IN^3/FT
c.	1.5VL16	0.0598 IN	0.373 IN^4/FT	0.411 IN^3/FT	0.404 IN^3/FT

   B. NON-COMPOSITE STEEL ROOF DECK

	DECK TYPE	DESIGN THICKNESS	MOMENT OF INERTIA I	MODULUS Sn	MODULUS Sp
a.	B22	0.0295 IN	0.155 IN^4/FT	0.186 IN^3/FT	0.192 IN^3/FT
b.	B20	0.0358 IN	0.201 IN^4/FT	0.234 IN^3/FT	0.247 IN^3/FT
c.	B18	0.0474 IN	0.289 IN^4/FT	0.318 IN^3/FT	0.327 IN^3/FT

2. PROVIDE A MINIMUM 1 1/2" BEARING ONTO ALL STEEL SUPPORTS. REFER TO THE PLAN NOTES FOR EFFECTIVE DIAMETER ARC PUDDLE WELD ATTACHMENT TO STEEL SUPPORTS IN ACCORDANCE WITH WITH ANSI/AWS D1.3 AND PATTERN. BUTTON PUNCHING OF SIDE LAPS IS NOT PERMITTED. DECK SHALL BE FREE OF STANDING WATER DURING FASTENING.

3. PROVIDE CLOSURE STRIPS (FILLER DECKING) BETWEEN DECKING AND STEEL FRAMING MEMBERS PARALLEL TO DECK SPAN AND STEEL BUTT STRIP AT ALL LOCATION WHERE DECK CHANGES DIRECTIONS MATCHING THE GAUGE AND GALVANIZED COATING OF THE STEEL DECK.

4. PROVIDE A EPOXY POLYAMIDE PRIMER AND TWO COATS OF 3 MILS OF EPOXY POLYAMIDE PAINT COMPATIBLE WITH GALVANIZED COATINGS ON ALL SURFACES FOLLOWING ALL WELDMENTS. DO NOT PAINT SURFACES TO RECEIVE SPRAY-ON FIRE RESISTANT MATERIAL.

5. DO NOT SUSPEND LOADS FROM ANY NON-COMPOSITE COLD FORMED STEEL ROOF DECK. HANGERS OF ALL SUSPENDED UTILITIES AND OTHER LOADS SHALL ATTACH TO STEEL BEAMS, GIRDERS, JOISTS, AND OTHER ISOLATED FRAMING ELEMENTS.

6. ERECTED COLD FORMED STEEL DECK SHALL BE INSPECTED BY QUALIFIED, INDEPENDENT INSPECTORS. FIELD INSPECTION REPORTS SHALL BE FILED WITH THE ENGINEER OF RECORD WITHIN 5 DAYS OF ACTUAL INSPECTION.

7. NO CONDUIT SHALL BE PLACED HORIZONTALLY WITHIN THE SLAB OF A COMPOSITE STEEL DECK. REFER TO THE TYPICAL COMPOSITE SLAB PENETRATION DETAIL FOR MORE INFORMATION.

PRE-MANUFACTURED CFS TRUSSES:

1. CONTRACTOR IS TO PROVIDE SHOP FABRICATED COLD-FORMED STEEL TRUSSES DESIGNED BY THE MANUFACTURER'S SPECIALTY ENGINEER LICENSED IN THE JURISDICTION WHERE THE PROJECT IS LOCATED.

2. THE MANUFACTURER SHALL HAVE A MINIMUM OF 5 YEARS OF EXPERIENCE FABRICATING CFS TRUSSES.

3. THE ENGINEER SHALL HAVE A MINIMUM OF 5 YEARS OF EXPERIENCE DESIGNING CFS TRUSSES.

4. ALL TRUSS MEMBERS SHALL BE FABRICATED FROM GALVANIZED SHEET METAL
   - a. TOP & BOTTOM CHORD MEMBERS SHALL HAVE A MINIMUM THICKNESS OF 63 MILS (16 GA.)
   - b. WEB MEMBERS SHALL HAVE A MINIMUM THICKNESS OF 47 MILS (18 GA.)

5. TRUSS TO TRUSS CONNECTIONS SHALL BE DESIGNED AND PROVIDED BY THE TRUSS MANUFACTURER.

6. THE CFS TRUSS MANUFACTURER SHALL SUBMIT SHOP DRAWINGS AND A LETTER OF CERTIFICATION FOR REVIEW AND APPROVAL BY THE ARCHITECT/ENGINEER OF RECORD PRIOR TO CFS TRUSS FABRICATION. SHOP DRAWINGS SHALL BEAR THE SEAL AND SIGNATURE OF A REGISTERED PROFESSIONAL ENGINEER IN THE STATE WHERE THE PROJECT IS LOCATED. THE SHOP DRAWINGS SHALL INCLUDE ERECTION DRAWINGS SHOWING THE PLACEMENT OF EACH TRUSS IN RELATION TO OTHER STRUCTURAL MEMBERS. A SHOP DRAWING SHALL BE SUBMITTED FOR EACH TRUSS PROFILE DESIGNATED ON THE ERECTION DRAWINGS AND SHALL INCLUDE THE PROJECT NAME, PROJECT NUMBER, DESIGN LOADS, AND REACTIONS AS WELL AS THE MATERIAL PROPERTIES, SIZES, AND GAUGES FOR EACH TRUSS COMPONENT.

7. SHOP DRAWINGS SHALL ALSO SHOW CONNECTION ASSEMBLIES WITH FASTENERS, AND ACCESSORIES.

8. THE CFS TRUSS MANUFACTURER SHALL SUBMIT A CALCULATION PACKAGE BEARING THE SEAL AND SIGNATURE OF A REGISTERED PROFESSIONAL ENGINEER IN THE STATE WHERE THE PROJECT IS LOCATED. THE PACKAGE SHALL INCLUDE CALCULATIONS FOR ALL TRUSSES, CONNECTIONS, AND ACCESSORIES INDICATING DESIGN LOADS AND MATERIAL PROPERTIES FOR EACH TRUSS.

9. SEE ROOF FRAMING PLANS AND ARCHITECTURAL DRAWINGS FOR EXTENTS OF CFS TRUSSES AS WELL AS SLOPES, LOCATIONS OF EAVES, RIDGES, HIPS, AND VALLEYS.

10. TRUSSES SHALL BE MANUFACTURED FABRICATED AND SHIPPED TO THE SITE IN THE MAXIMUM LENGTHS AND HEIGHTS POSSIBLE.

11. ALL CFS TRUSSES SHALL BE TEMPORARILY BRACE AND PERMANENTLY BRACED AS REQUIRED BY THE TRUSS MANUFACTURER. BRACING AND BRIDGING SHALL BE DESIGNED AND PROVIDED BY THE MANUFACTURER.

12. FIELD FABRICATION OF CFS TRUSSES SHALL NOT BE PERMITTED.

13. DELIVER AND HANDLE TRUSSES PER MANUFACTURER'S RECOMMENDATIONS.

14. TRUSSES SHALL NOT BE STORED ON SITE.

15. TOP CHORD:
   - a. LIVE LOAD 20 PSF
   - b. DEAD LOAD 10 PSF

16. BOTTOM CHORD:
   - a. LIVE LOAD 5 PSF
   - b. DEAD LOAD 5 PSF

WOOD FRAMING:

1. ALL CEILING AND WALL NAILERS SHALL BE PRESSURE TREATED AND HAVE THE MINIMUM PROPERTIES OF SOUTHERN PINE #2, ALLOWABLE STRESSES PER THE NATIONAL DESIGN SPECIFICATION SUPPLEMENT 2009 EDITION, 15% MAX MOISTURE CONTENT.

2. ALL 2X STUD FRAMING SHALL HAVE THE MINIMUM PROPERTIES OF DOUGLAS FIR #2, ALLOWABLE STRESSES PER THE NATIONAL DESIGN SPECIFICATION SUPPLEMENT 2001 EDITION, 19% MAX MOISTURE CONTENT. PROVIDE SOLID BLOCKING BETWEEN STUDS AT 4'-6" ON CENTER VERTICAL (MAX.).

3. ALL DIMENSION LUMBER SHALL BE GRADE STAMPED PER W.C.L.B. RULES

4. ROOF DECK AND WALL SHEATHING SHALL BE 19/32" OSB, STRUCTURAL GRADE.

5. ROOF SHEATHING SHALL BE ORIENTED WITH LONG DIMENSION PERPENDICULAR TO SUPPORTS. ATTACH PLYWOOD TO FRAMING WITH [10D] NAILS AT 6" O.C. AT PANEL PERIMETER AND AT 8" O.C. AT INTERMEDIATE SUPPORTS. PROVIDE PANEL CLIPS AT MIDSPAN BETWEEN SUPPORTS AND SOLID BLOCKING AT ALL PANEL EDGES.

6. WALL SHEATHING SHALL BE APPLIED DIRECTLY TO WALL FRAMING WITH 8D NAILS AT 6" O.C. AT PANEL PERIMETER AND 12" O.C. AT INTERMEDIATE SUPPORTS. PROVIDE SOLID BLOCKING AT ALL UNSUPPORTED PANEL EDGES. PROVIDE DOUBLE STUDS AND GALVANIZED HOLDOWNS AT EACH END OF SHEARWALL.

GLUED – LAMINATED WOOD:

1. CONTRACTOR IS TO PROVIDE FACTORY GLUED-LAMINATED STRUCTURAL UNITS, CONNECTIONS, AND ACCESSORIES PRODUCED BY AN AITC-LICENSED FABRICATOR QUALIFIED TO DESIGNATE PRODUCTS WITH AITC QUALITY INSPECTED MARK. FABRICATOR SHALL BE AISC CERTIFIED FOR STEEL CONNECTIONS
.

2. AS INDICATED IN AITC – 110 - USE ARCHITECTURAL APPEARANCE GRADE IN EXPOSED AREAS AND FRAMING APPEARANCE GRADE FOR ALL OTHER AREAS, UNO

3. FOR GLULAM BEAMS AND PURLINS PRIMARILY IN BENDING USE THE FOLLOWING MINIMUM STRENGTH PROPERTIES:
   - a. 24F-E4-1.8E
   - b. Fb = 2400 psi
   - c. Fv = 300 psi
   - d. E = 1,800,000 psi
   - e. CAMBER BEAMS AS DESIGNATED ON THE DRAWINGS. IF NO CAMBER IS INDICATED PROVIDE CAMBER TO THE AMOUNT OF DEFLECTION DUE TO THE DEAD LOAD OF THE MEMBER ONLY.

4. FOR GLULAM COLUMNS PRIMARILY IN COMPRESSION USE THE FOLLOWING MINIMUM STRENGTH PROPERTIES:
   - a. 49-SP-N1M16
   - b. Fc = 2100 psi
   - c. Ft = 1350 psi
   - d. Fby = 1950 psi
   - e. Fbx = 1800 psi
   - f. Fvy = 260 psi
   - g. Fvx = 300 psi
   - h. E = 1,700,000 psi

5. CONNECTORS, ANCHORS, ACCESSORIES SHALL BE STEEL FABRICATED FROM ASTM A36 (MINIMUM Fy = 36 ksi) ROLLED SHAPES, PLATES, AND BARS. ASSEMBLIES SHALL BE MANUFACTURER'S STANDARD TYPES FOR THE GLULAM SIZES INDICATED.

6. THE GLULAM MANUFACTURER SHALL SUBMIT SHOP DRAWINGS AND A LETTER OF CERTIFICATION FOR REVIEW AND APPROVAL BY THE ARCHITECT/ENGINEER OF RECORD PRIOR TO GLULAM FABRICATION. SHOP DRAWINGS SHALL BEAR THE SEAL AND SIGNATURE OF A REGISTERED PROFESSIONAL ENGINEER IN THE STATE WHERE THE PROJECT IS LOCATED. SHOP DRAWINGS SHALL INCLUDE THE PROJECT NAME PROJECT NUMBER, AND DESIGN LOADS. SHOP DRAWINGS SHALL INCLUDED THE MATERIAL PROPERTIES FOR EACH MEMBER, MEMBER SIZES, CONNECTION ASSEMBLIES WITH FASTENERS, AND ACCESSORIES.

7. THE GLULAM MANUFACTURER SHALL SUBMIT A CALCULATION PACKAGE BEARING THE SEAL AND SIGNATURE OF A REGISTERED PROFESSIONAL ENGINEER IN THE STATE WHERE THE PROJECT IS LOCATED. THE PACKAGE SHALL INCLUDE CALCULATIONS FOR ALL FRAMING MEMBERS, CONNECTIONS, AND ACCESSORIES INDICATING DESIGN LOADS AND MATERIAL PROPERTIES FOR EACH MEMBER.

SUBMITTALS:

1. THE GENERAL CONTRACTOR SUBMITTALS FOR ENGINEER REVIEW ARE AS FOLLOWS:
   - A. STRUCTURAL STEEL (*)
   - B. NON-COMPOSITE METAL DECK
   - C. COMPOSITE METAL DECK
   - D. COMPOSITE SHEAR CONNECTORS
   - E. PRE-ENGINEERED METAL BUILDING (#)
   - F. PRE-ENGINEERED HANGAR DOOR (#)
   - G. PRE-ENGINEERED ALUMINUM CANOPY (#)
   - H. PRE-ENGINEERED ALUMINUM CANOPY FOUNDATIONS (#)
   - I. PRE-ENGINEERED METAL OVERHANG SUNSHADE (#)
   - J. LIGHT GAUGE METAL FRAMING (#)
   - K. LIGHT GAGE METAL TRUSSES (#)
   - L. PRE-ENGINEERED WOOD TRUSSES (#)
   - M. CONCRETE MIX DESIGNS
   - N. MASONRY UNITS AND MORTAR
   - O. REINFORCING STEEL
   - P. CHEMICAL ADHESIVE ANCHORS
   - Q. CONSTRUCTION JOINT LOCATIONS IN STRUCTURAL FLOORS
   - R. HOLLOW-CORE PLANKS (*)
   - S. CONCRETE REPAIR, CURING, AND SEALER PRODUCTS
   - T. FORMWORK, SHORING, RESHORING (#)
     - a. ITEMS MARKED (*) SHALL REQUIRE SUBMITTAL OF SHOP DRAWINGS PREPARED UNDER THE DIRECT SUPERVISION AND SIGNED AND SEALED BY A PROFESSIONAL DELEGATED ENGINEER REGISTERED IN THE STATE OF FLORIDA FOR ENGINEER OF RECORD'S REVIEW. GENERIC PRODUCTS WILL NOT BE ACCEPTED.
     - b. ITEMS MARKED (#) SHALL REQUIRE SUBMITTAL OF SHOP DRAWINGS AND CALCULATIONS PREPARED UNDER THE DIRECT SUPERVISION AND SIGNED AND SEALED BY A PROFESSIONAL DELEGATED ENGINEER REGISTERED IN THE STATE OF FLORIDA FOR ENGINEER OF RECORD'S REVIEW.
     - c. ENGINEER OF RECORD REVIEW OF SUBMITTALS MARKED (*) OR (#) WILL NOT BEGIN UNTIL THE SUBMITTAL IS SIGNED AND SEALED BY THE DELEGATED PROFESSIONAL.

1. THE CONTRACT DOCUMENTS WILL GOVERN OVER THE SHOP DRAWINGS UNLESS OTHERWISE SPECIFIED IN WRITING BY THE ENGINEER.

2. SUBMITTALS SHALL CLEARLY IDENTIFY THE PROJECT NAME, SPECIFIC PRODUCT UTILIZED, APPLICABLE CODES, DESIGN CRITERIA, AND SHOW ALL DETAILS AND PLANS NECESSARY FOR PROPER FABRICATION AND INSTALLATION. HAND-WRITTEN COMMENTS AND/OR MARKINGS ON THE SUBMITTALS BY THE CONTRACTOR SHALL BE MADE USING A GREEN COLOR PEN AND THE ENGINEER/ARCHITECT SHALL UTILIZE A RED COLOR PEN.

3. SHOP DRAWINGS SHALL BE REVIEWED BY THE GENERAL CONTRACTOR FOR FULL COORDINATION OF ALL CONSTRUCTION TRADES WITH THE LATEST DESIGN DISCIPLINES DOCUMENTS, REVISIONS/CLARIFICATIONS, AND RESPONSES TO RFIs. SHOP DRAWINGS SHALL BE MARKED BY THE GENERAL CONTRACTOR "APPROVED" PRIOR TO SUBMITTING TO THE OWNER, ARCHITECT OF RECORD, OR ENGINEER OF RECORD. GENERAL CONTRACTOR-GENERATED QUESTIONS OR REQUESTS FOR INFORMATION WITHIN THE SUBMITTALS SHALL BE CLEARLY MARKED. CHANGES AND ADDITIONS MADE ON RE-SUBMITTALS SHALL BE CLEARLY FLAGGED AND NOTED. THE PURPOSE OF THE RE-SUBMITTALS SHALL BE CLEARLY NOTED ON THE LETTER OF TRANSMITTAL. ARCHITECT/ENGINEER REVIEW WILL BE LIMITED TO ONLY THOSE ITEMS CAUSING THE RE-SUBMITTAL.

4. SHOP DRAWINGS WILL BE REVIEWED FOR GENERAL COMPLIANCE WITH THE DESIGN INTENT OF THE CONTRACT DOCUMENTS AND PRODUCTS FUNCTIONAL EQUIVALENCE ONLY. IT SHALL BE THE RESPONSIBILITY OF THE GENERAL CONTRACTOR TO VERIFY COMPLIANCE WITH THE CONTRACT DOCUMENTS AS TO QUANTITY, LENGTH, ELEVATIONS, DIMENSIONS, ETC.

5. A MINIMUM OF 10 WORKING DAYS SHALL BE ALLOWED FOR THE ENGINEER TO REVIEW A SUBMITTAL.

6. NON-CONFORMING SUBMITTALS WILL BE RETURNED WITHOUT REVIEW. ARCHITECT/ENGINEER WILL NOT BE RESPONSIBLE FOR SCHEDULE DELAYS CAUSED BY RETURNED SUBMITTALS THAT FAILED TO MEET THE AFOREMENTIONED CRITERIA.

FOR PERMIT & BIDDING ONLY

AVCON
TRANSFORMING TODAYS IDEAS INTO TOMORROW'S REALITY

Michael Baker INTERNATIONAL
4211 W. BOY SCOUT BLVD
SUITE 500
TAMPA, FL 33607
FLORIDA LICENSE # AA 26002484

JEFFREY YEAGER, P.E.
FL LICENSE NO.: 62853

NO.	DATE	REVISION	BY

GENERAL NOTES

100% BID DRAWINGS

AIRPORT TERMINAL AND HANGAR DEVELOPMENT

PREPARED FOR DEFUNIAK SPRINGS MUNICIPAL AIRPORT

DESIGNED BY:	AJM
DRAWN BY:	AJM
CHECKED BY:	JY
APPROVED BY:	JY
PROJECT NO:	2019.028.01
DATE:	11/1/2021

SHEET NUMBER

S1.01

THIS DOCUMENT CONTAINS PRIVILEGED AND PROPRIETARY INFORMATION, ALL OF WHICH IS EXPRESSLY PROVIDED BY AVCON, INC., FOR USE BY THE INTENDED RECIPIENT, AND FOR A SPECIFIC PURPOSE WITHOUT THE EXPRESS WRITTEN CONSENT OF AVCON, INC. ANY DISTRIBUTION, REPRODUCTION, OR OTHER USE OF THIS DOCUMENT, IN WHOLE OR IN PART, IS STRICTLY PROHIBITED.

DESIGN LOADS:

THE FOLLOWING SUPERIMPOSED LOADS HAVE BEEN UTILIZED IN ACCORDANCE WITH THE MOST RECENT PRINTING/ERRATA OF ASCE 7-16 'MINIMUM DESIGN LOADS FOR BUILDINGS AND OTHER STRUCTURES'.

1. LIVE LOADS:
   - A. ROOF — 20 PSI
2. DEAD LOADS:
   - A. METAL ROOF STRUCTURE W/ INSULATION — 15 PSF
   - B. ROOF TO RESIST WIND UPLIFT — 10 PSF
   - C. CEILING — 5 PSF
3. WIND DESIGN DATA:
   - A. ULTIMATE WIND SPEED (Vult) — 135 MPH
   - B. NOMINAL WIND SPEED (Vasd) — 105 MPH
   - C. RISK CATEGORY — II
   - D. EXPOSURE CATEGORY — C
   - E. INTERNAL PRESSURE COEFF. (GCpi) — +/- 0.18 (ENCLOSED)
   - F. COMPONENTS AND CLADDING PRESSURE — SEE WIND PRESSURE PLAN
4. SEISMIC DESIGN DATA:
   - A. RISK CATEGORY — I
   - B. SEISMIC IMPORTANCE FACTOR — 1.0
   - C. MAPPED SPECTRAL RESPONSE ACCELERATION PARAMETER (Ss) — 0.075
   - D. MAPPED SPECTRAL RESPONSE ACCELERATION PARAMETER (S1) — 0.005
   - E. SITE CLASS — D
   - F. SPECTRAL RESPONSE ACCELERATION PARAMETER (Sds) — 0.08
   - G. SPECTRAL RESPONSE ACCELERATION PARAMETER (Sd1) — 0.008
   - H. SEISMIC DESIGN CATEGORY — A

COMPONENTS AND CLADDING WIND PRESSURES (PSF)

TERMINAL OFFICES

LOCATION	ZONE	EFFECTIVE WIND AREA (A), FT^2						
		A = 2	A = 10	A = 20	A = 50	A = 100	A = 250	A = 500
ROOF	1	+29.8,-73.9	+24.3,-73.9	+21.9,-73.9	+18.7,-45.0	+16.3,-23.1	+16.3,-23.1	+16.3,-23.1
	1-OH	-90.9	-90.9	-90.9	-71.6	-57.0	-57.0	-57.0
	2e	+29.8,-73.9	+24.3,-73.9	+21.9,-73.9	+18.7,-45.0	+16.3,-23.1	+16.3,-23.1	+16.3,-23.1
	2e-OH	-90.9	-90.9	-90.9	-71.6	-57.0	-57.0	-57.0
	2n	+29.8,-107.8	+24.3,-107.8	+21.9,-93.2	+18.7,-73.9	+16.3,-59.3	+16.3,-40.0	+16.3,-40.0
	2n-OH	-124.8	-124.8	-113.8	-99.3	-88.4	-73.9	-73.9
	2r	+29.8,-107.8	+24.3,-107.8	+21.9,-93.2	+18.7,-73.9	+16.3,-59.3	+16.3,-40.0	+16.3,-40.0
	2r-OH	-124.8	-124.8	-113.8	-99.3	-88.4	-73.9	-73.9
	3e	+29.8,-107.8	+24.3,-107.8	+21.9,-93.2	+18.7,-73.9	+16.3,-59.3	+16.3,-40.0	+16.3,-40.0
	3e-OH	-145.1	-145.1	-126.1	-101.0	-82.0	-57.0	-57.0
	3r	+29.8,-128.1	+24.3,-128.1	+21.9,-109.8	+18.7,-85.5	+16.3,-67.1	+16.3,-67.1	+16.3,-67.1
	3r-OH	-165.4	-165.4	-140.9	-108.6	-84.1	-84.1	-84.1
WALLS	4	+40.0,-43.4	+40.0,-43.4	+38.2,-41.6	+35.8,-39.2	+34.0,-37.4	+31.6,-35.0	+29.8,-33.2
	5	+40.0,-53.6	+40.0,-53.6	+38.2,-50.0	+35.8,-45.2	+34.0,-41.6	+31.6,-36.8	+29.8,-33.2

TERMINAL LOBBY

LOCATION	ZONE	EFFECTIVE WIND AREA (A), FT^2					
		A = 7	A = 10	A = 50	A = 100	A = 200	A = 500
ROOF	1	+34.9,-62.6	+34.9,-62.6	+23.8,-46.0	+19.0,-38.8	+19.0,-38.8	+19.0,-38.8
	2e	+34.9,-86.4	+34.9,-86.4	+23.8,-65.1	+19.0,-55.9	+19.0,-46.7	+19.0,-46.7
	2e-OH	-106.2	-104.1	-94.6	-90.5	-86.4	-86.4
	2r	+34.9,-86.4	+34.9,-86.4	+23.8,-65.1	+19.0,-55.9	+19.0,-46.7	+19.0,-46.7
	3e	+34.9,-86.4	+34.9,-86.4	+23.8,-65.1	+19.0,-55.9	+19.0,-46.7	+19.0,-46.7
	3e-OH	-129.9	-123.2	-92.8	-79.7	-66.6	-66.6
WALLS	4	+46.7,-50.7	+46.7,-50.7	+41.9,-45.8	+39.8,-43.7	+37.6,-41.6	+34.9,-38.8
	5	+46.7,-62.6	+46.7,-62.6	+41.9,-52.8	+39.8,-48.6	+37.6,-44.4	+34.9,-38.8

HANGAR

LOCATION	ZONE	EFFECTIVE WIND AREA (A), FT^2						
		A = 10	A = 20	A = 50	A = 100	A = 200	A = 500	A = 1000
ROOF	1	+18.9,-74.0	+17.7,-69.1	+16.1,-62.6	+16.0,-57.8	+16.0,-52.9	+16.0,-46.4	+16.0,-46.4
	1'	+18.9,-42.5	+17.7,-42.5	+16.1,-42.5	+16.0,-42.5	+16.0,-36.6	+16.0,-28.7	+16.0,-22.8
	2	+42.5,-97.6	+40.6,-91.3	+38.1,-83.0	+36.2,-76.7	+34.4,-70.5	+31.9,-62.2	+31.9,-62.2
	3	+42.5,-97.6	+40.6,-91.3	+38.1,-83.0	+36.2,-76.7	+34.4,-70.5	+31.9,-62.2	+31.9,-62.2
WALLS	4	+42.5,-46.0	+40.6,-44.1	+38.1,-41.7	+36.2,-39.8	+34.4,-37.9	+31.9,-35.4	+31.9,-35.4
	5	+42.5,-56.7	+40.6,-52.9	+38.1,-47.9	+36.2,-44.1	+34.4,-40.4	+31.9,-35.4	+31.9,-35.4

NOTES:

1. EFFECTIVE WIND AREA IS SUCH AS DEFINED BY ASCE 7 FOR EFFECTIVE WIND AREAS BETWEEN THOSE GIVEN ABOVE, THE PRESSURE MAY BE INTERPOLATED, OTHERWISE USE PRESSURE WITH THE LOWER EFFECTIVE AREA.
2. WIND PRESSURES ARE GROSS POSITIVE AND NEGATIVE ULTIMATE VALUES CALCULATED WITH THE ULTIMATE WIND SPEED (Vult) PER THE GENERAL NOTES DESIGN LOADS CRITERIA. FOR ALLOWABLE WIND PRESSURES USING NOMINAL WIND SPEED (Vasd), MULTIPLY THE ABOVE VALUES BY 0.6.
3. POSITIVE (+) WIND PRESSURE INDICATES TOWARDS THE SURFACE, NEGATIVE (-) WIND PRESSURE INDICATES AWAY FROM THE SURFACE.
4. "XX-OH" INDICATES OVERHANG WIND PRESSURE.
5. a = 6.2 FT (OFFICE); a = 4.4 FT (LOBBY); a =10.0 FT, h = 32.0 FT (HANGAR)

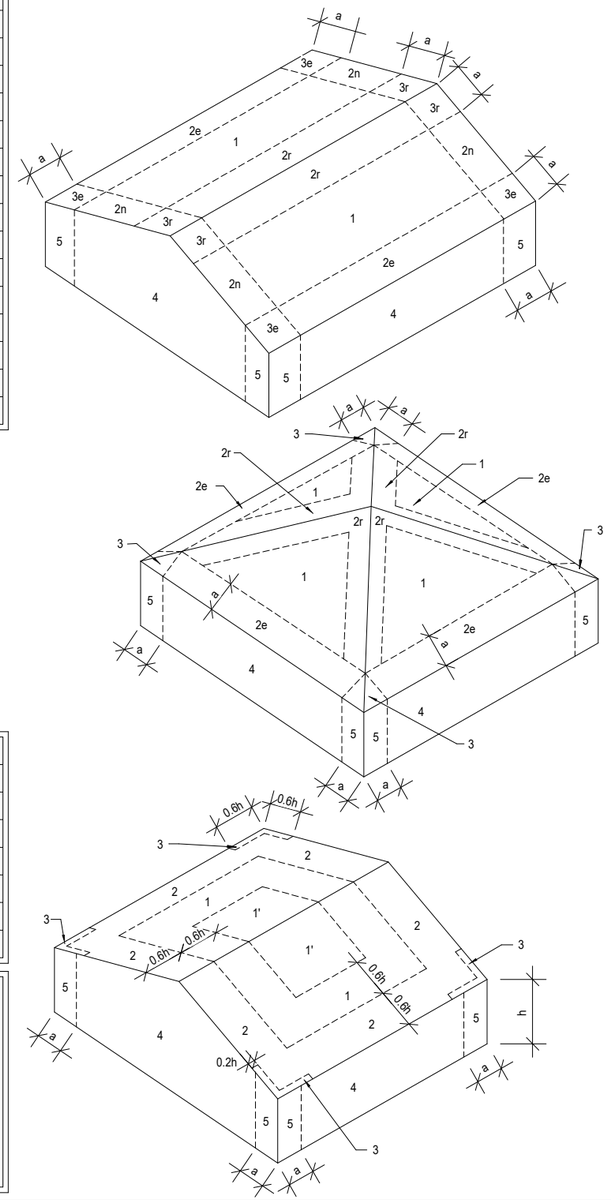

PRE-ENGINEERED METAL BUILDING:

1. THE PRE-ENGINEERED METAL BUILDING (PEMB) SHALL CONSIST OF ROOF DECK, RIGID FRAMES, METAL WALL PANELS ON FRAMING, CANOPY FRAMING, GUTTERS AND DOWNSPOUTS, AND FLASHING. DEVIATION FROM BAY SPACING SHOWN ON THE PLANS SHALL NOT BE PERMITTED TO SUIT MANUFACTURER'S STANDARDS. THE PEMB MANUFACTURER SHALL BE A MEMBER OF THE METAL BUILDING MANUFACTURER'S ASSOCIATION (MBMA).
2. THE SYSTEM SHALL BE DESIGNED AND DETAILED BY THE MANUFACTURER TO SUSTAIN THE DESIGN LOADS SPECIFIED IN 'DESIGN LOADS' GENERAL NOTES, INCLUDING WIND LOADS. REFER TO OTHER DESIGN DISCIPLINE DRAWINGS FOR OTHER LOADS NOT INDICATED HEREIN SUCH AS BUT NOT LIMITED TO HANGAR SWINGING DOORS, HANGAR BI-PARTING ROLLING DOORS, HANGAR FLOATING ROLLING DOORS, SUSPENDED FANS, WALL-MOUNTED FANS, STAIRS, CRANE RAILS, EQUIPMENT, CURTAINS, CURTAIN WALL FRAMING, OPERABLE PARTITIONS, OVERHEAD FOLDING DOORS, ETC. THE DESIGN SHALL BE IN ACCORDANCE WITH THE LATEST ISSUES OF THE AISC AND AISI SPECIFICATIONS AND MBMA 'METAL BUILDING SYSTEMS MANUAL' DESIGN PRACTICES.
3. COLUMNS SHALL BE DESIGNED AS UNBRACED BY THE MASONRY WALLS. ATTACHMENT OF PEMB COLUMNS TO WALLS SHALL BE MADE AFTER ROOF DEAD LOADS ARE APPLIED.
4. PEMB SHOP DRAWINGS AND A LETTER OF CERTIFICATION SHALL BE SUBMITTED FOR REVIEW AND APPROVAL PRIOR TO FABRICATION. SHOP DRAWINGS SHALL BEAR THE SIGNATURE AND IMPRESSED SEAL OF A FLORIDA REGISTERED PROFESSIONAL ENGINEER. SHOP DRAWINGS SHALL INDICATE THE DESIGN LOADS AND JOB NAME AND NUMBER. THEY SHALL INCLUDE SIZES OF ALL THE FRAMING MEMBERS AND RELATED ACCESSORIES AND SPECIALIZED CONNECTIONS, THE ANCHOR BOLT PLAN AND REACTIONS. STANDARD CUT SHEETS OF THE ABOVE ARE NOT ACCEPTABLE. STANDARD CUT SHEETS MAY BE SUBMITTED FOR SECONDARY FRAMING CONNECTION DETAILS, FLASHING AND SHEETING DETAILS, ETC. THE GENERAL CONTRACTOR SHALL BE RESPONSIBLE FOR REVIEW AND APPROVAL IN WRITING OF ANY INTERIM AND ALL FINAL PEMB SHOP DRAWINGS TO ASSURE THEY MATCH THE CONCEPT DESIGN INTENT PRIOR TO FORWARDING ONTO ENGINEER FOR REVIEW.
5. THE MANUFACTURER SHALL PROVIDE SIGNED AND SEALED CALCULATIONS FOR ALL FRAMING MEMBERS, RELATED ACCESSORIES, AND SPECIALIZED CONNECTIONS PREPARED UNDER THE SUPERVISION OF A FLORIDA REGISTERED PROFESSIONAL ENGINEER. THE SUBMITTAL SHALL INCLUDE THE LOAD COMBINATION REACTIONS FOR EACH COLUMN SUPPORT TO THE ENGINEER OF RECORD PRIOR TO THE FINAL FOUNDATION PRICING PACKAGE SUBMITTAL. IF THE MANUFACTURER DOES NOT COMPLY, THE FOUNDATION DESIGN WILL BE ASSUMED TO RESIST THE COMBINED GRAVITY AND WIND LOADS SHOWN ON PLAN. IF THE PEMB MANUFACTURER'S REACTION BECOME AVAILABLE AFTER THE OWNER'S FINAL NEGOTIATED COST AND THE ASSUMED FOUNDATION REQUIRE LARGER FOUNDATIONS, THE INCREASE IN FOUNDATION SIZE SHALL BE PROVIDED AT NO COST TO THE OWNER OR THE ENGINEER OF RECORD.
6. PEMB ANCHOR BOLT DIAMETER SHALL BE DETERMINED BY METAL BUILDING MANUFACTURER. LENGTH AND TYPE OF BOLT REQUIRED SHALL BE NOTED ON THESE DRAWINGS.

POST-INSTALLED ANCHORS:

1. POST-INSTALLED CONCRETE ANCHORS SHALL BE AS INDICATED ON THE DRAWINGS. THE ANCHOR TYPES AND CONDITIONS LISTED BELOW ARE THE DESIGN AND DETAILING BASIS OF ALL POST-INSTALLED ANCHORAGE IN THE CONTRACT DOCUMENTS:
   - A. ANCHORAGE TO CONCRETE (CRACKED) ELEMENTS USING ADHESIVE ANCHOR
     - FOR FAST CURE APPLICATIONS:
       - a. HILTI HIT-HY 200 MAX-A (ICC ESR-3187) WITH CONTINUOUSLY THREADED RODS (ASTM A193 GrB7 FOR CARBON STEEL AND ASTM F593 FOR STAINLESS STEEL) OR CONTINUOUSLY DEFORMED REINFORCING STEEL.
     - FOR SLOW CURE APPLICATIONS:
       - a. HILTI HIT-RE 500-V3 (ICC ESR-3814) WITH HILTI HIS-N OR HIS-RN INTERNALLY THREADED INSERTS, CONTINUOUSLY THREADED RODS (ASTM A193 GrB7 FOR CARBON STEEL AND ASTM F593 FOR STAINLESS STEEL) OR CONTINUOUSLY DEFORMED REINFORCING STEEL.
       - b. SIMPSON STRONG-TIE SET-XP (ICC-ES ESR-2508) CONTINUOUSLY THREADED RODS (ASTM A193 GrB7 FOR CARBON STEEL AND ASTM F593 FOR STAINLESS STEEL) OR CONTINUOUSLY DEFORMED REINFORCING STEEL.
   - B. ANCHORAGE TO SOLID (UNCRACKED) GROUTED MASONRY/MULTI-WYTHE BRICK USING ADHESIVE ANCHOR
     - a. HILTI HIT-HY 70 (ICC ESR-2682) WITH HILTI HAS-E CONTINUOUSLY THREADED RODS, CONTINUOUSLY THREADED RODS (ASTM A193 GrB7 FOR CARBON STEEL AND ASTM F593 FOR STAINLESS STEEL), OR CONTINUOUSLY DEFORMED STEEL REBAR.
     - b. SIMPSON STRONG-TIE SET (ICC-ES ESR-1772) WITH (ASTM A193 GrB7 FOR CARBON STEEL AND ASTM F593 FOR STAINLESS STEEL), OR CONTINUOUSLY DEFORMED STEEL REBAR.
   - C. ANCHORAGE TO HOLLOW MASONRY USING ADHESIVE ANCHOR
     - a. SIMPSON STRONG-TIE SET (ICC-ES ESR-1772) WITH CONTINUOUSLY THREADED RODS (ASTM F1554 Gr36FOR CARBON STEEL AND ASTM F593 FOR STAINLESS STEEL).
     - b. HILTI HIT-HY 70 (ICC ESR-3342) WITH HILTI HAS-E CONTINUOUSLY THREADED RODS, CONTINUOUSLY THREADED RODS (ASTM A193 GrB7 FOR CARBON STEEL AND ASTM F593 FOR STAINLESS STEEL), OR CONTINUOUSLY DEFORMED STEEL REBAR.
   - D. ANCHORAGE USING EXPANSION BOLTS
     - a. HILTI KWIK BOLT 3 (ICC ESR-2302 IN CONCRETE), (ICC ESR-1385 IN GROUT FILLED CMU) CARBON STEEL, UNO.
2. ANCHOR CAPACITY USED IN DESIGN SHALL BE BASED ON THE TECHNICAL DATA PUBLISHED BY HILTI. SUBSTITUTION REQUESTS FOR ALTERNATE PRODUCTS MUST BE APPROVED IN WRITING BY THE STRUCTURAL ENGINEER OF RECORD PRIOR TO USE. CONTRACTOR SHALL PROVIDE CALCULATIONS DEMONSTRATING THAT THE SUBSTITUTED PRODUCT IS CAPABLE OF ACHIEVING THE PERFORMANCE VALUES OF THE SPECIFIED PRODUCT LISTED ABOVE FOR EACH OF THE SPECIFIC CONNECTIONS DETAILED IN THE PLANS. SUBSTITUTIONS WILL BE EVALUATED BY THEIR HAVING AN ICC-ES AC58, ICC-ES AC60, AND/OR ICC-ES AC308 SHOWING COMPLIANCE WITH THE RELEVANT BUILDING CODE FOR LOAD RESISTANCE, INSTALLATION CATEGORY, AND AVAILABILITY OF COMPREHENSIVE INSTALLATION INSTRUCTIONS. ADHESIVE ANCHOR EVALUATION WILL ALSO CONSIDER CREEP, IN-SERVICE TEMPERATURE, AND INSTALLATION TEMPERATURE.
3. INSTALL ANCHORS PER THE MANUFACTURER INSTRUCTIONS, AS INCLUDED IN THE ANCHOR PACKAGING.
4. OVERHEAD ADHESIVE ANCHORS MUST BE INSTALLED USING THE HILTI PROFIS SYSTEM.
5. THE CONTRACTOR SHALL ARRANGE AN ANCHOR MANUFACTURER'S REPRESENTATIVE TO PROVIDE ONSITE INSTALLATION TRAINING FOR ALL OF THEIR ANCHORING PRODUCTS SPECIFIED. THE STRUCTURAL ENGINEER OF RECORD MUST RECEIVE DOCUMENTED CONFIRMATION THAT ALL OF THE CONTRACTOR'S PERSONNEL WHO INSTALL ANCHORS ARE TRAINED PRIOR TO THE COMMENCEMENT OF INSTALLING ANCHORS.
6. ANCHOR CAPACITY IS DEPENDANT UPON SPACING BETWEEN ADJACENT ANCHORS AND PROXIMITY OF ANCHORS TO EDGE OF CONCRETE. INSTALL ANCHORS IN ACCORDANCE WITH SPACING AND EDGE CLEARANCES INDICATED ON THE DRAWINGS.
7. EXISTING REINFORCING BARS IN THE CONCRETE STRUCTURE MAY CONFLICT WITH SPECIFIC ANCHOR LOCATIONS. UNLESS NOTED ON THE DRAWINGS THAT THE BARS CAN BE CUT, THE CONTRACTOR SHALL REVIEW THE EXISTING STRUCTURAL DRAWINGS AND SHALL UNDERTAKE TO LOCATE THE POSITION OF THE REINFORCING BARS AT THE LOCATIONS OF THE CONCRETE ANCHORS, BY FERROSCAN, GPR, X-RAY, CHIPPING OR OTHER MEANS.

FOR PERMIT & BIDDING ONLY

AVCON — TRANSFORMING TODAYS IDEAS INTO TOMORROW'S REALITY

Michael Baker INTERNATIONAL
4211 W. BOY SCOUT BLVD
SUITE 500
TAMPA, FL 33607
FLORIDA LICENSE # AA 26002484

JEFFREY YEAGER, P.E.
FL LICENSE NO.: 62853

NO	DATE	REVISION	BY

GENERAL NOTES

100% BID DRAWINGS

AIRPORT TERMINAL AND HANGAR DEVELOPMENT

PREPARED FOR

DEFUNIAK SPRINGS MUNICIPAL AIRPORT

DESIGNED BY:	AJM
DRAWN BY:	AJM
CHECKED BY:	JY
APPROVED BY:	JY
PROJECT NO:	2019.028.01
DATE:	11/1/2021

SHEET NUMBER

S1.02

THIS DOCUMENT CONTAINS PRIVILEGED AND PROPRIETARY INFORMATION, ALL OF WHICH IS EXPRESSLY PROVIDED BY AVCON, INC., FOR USE BY THE INTENDED RECIPIENT, AND FOR A SPECIFIC PURPOSE, WITHOUT THE E EXPRESS WRITTEN CONSENT OF AVCON, INC. ANY DISTRIBUTION, REPRODUCTION, OR OTHER USE OF THIS DOCUMENT, IN WHOLE OR IN PART, IS S TRICTLY PROHIBITED.

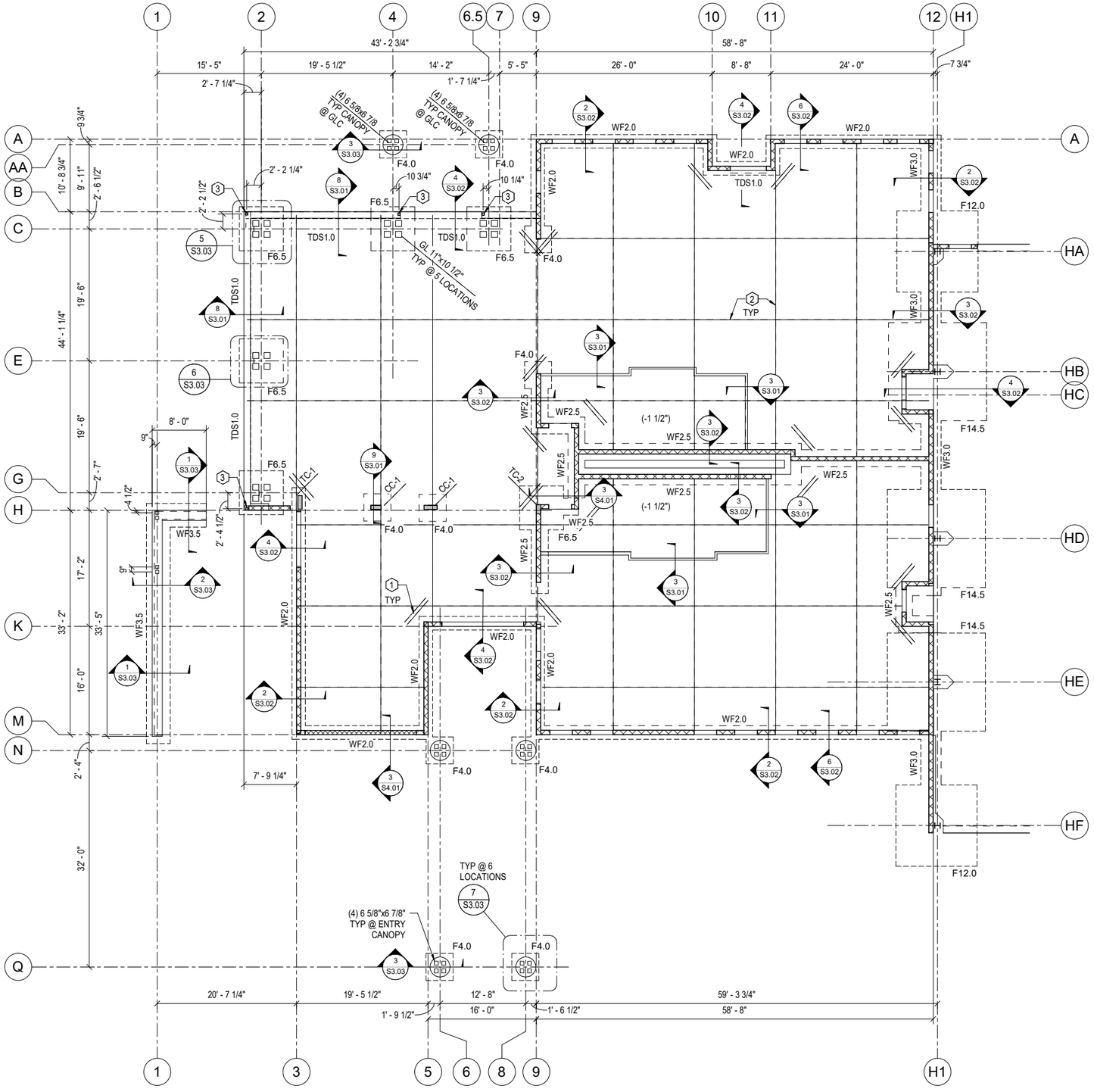

1 1ST FLOOR FOUNDATION PLAN - OFFICE
1/8" = 1'-0"

FOUNDATION PLAN NOTES

1. FLOOR SLAB CONSTRUCTION SHALL BE 4" THICK 3000 PSI CONCRETE SLAB-ON-GRADE REINFORCED WITH W2.0 x W2.0 – 6 x 6 WWF PLACED IN THE TOP ONE-THIRD OF THE SLAB DEPTH OVER VAPOR RETARDANT ON COMPACTED SUB-GRADE.
   a. SLAB-ON-GRADE CONSTRUCTION, SEE DETAILS 1 THRU 3 /S3.01
   b. T/SLAB EL = 0'-0" – REFER TO CIVIL DWGS FOR REFERENCE ELEVATION
   c. REFERENCE ARCHITECTURAL, MECHANICAL, ELECTRICAL, AND PLUMBING DRAWINGS FOR FLOOR SLOPES, DRAINS, AND DEPRESSION LOCATIONS.
   d. MAINTAIN SLAB THICKNESS AT ALL FLOOR SLOPES, DRAINS, AND DEPRESSIONS.
   e. REFERENCE ARCHITECTURAL, MECHANICAL, AND ELECTRICAL DRAWINGS FOR CONCRETE EQUIPMENT PAD LOCATIONS, SEE DETAIL 4/S3.01
2. FOOTING CONSTRUCTION SHALL BE AS INDICATED ON THE DRAWING
   a. SEE FOUNDATION SCHEDULE ON SHEET S5.06 FOR THE FOLLOWING:
      i. 'WFX.X' – INDICATES WALL FOOTING
      ii. 'FX.X' – INDICATES SPREAD FOOTING
      iii. 'TDSX.X' – INDICATES TURN DOWN SLAB
   b. T/WALL FTG EL = -1'-4" UNO
   c. T/SPREAD FTG EL = -1'-4" UNO
   d. CONDUIT AND PIPE PENETRATIONS: STEP AND/OR LOWER FOUNDATIONS WHERE SHOWN AND AS NECESSARY TO AVOID INTERFERENCE WITH OTHER TRADES. SEE FOUNDATION DETAILS 7/S3.01 AND 1/S3.02
   d. FOUNDATION REINFORCEMENT AT CORNERS AND INTERSECTIONS: SEE 5/S3.01
   e. SEE FOUNDATION DETAILS FOR ADDITIONAL INFORMATION.
3. MASONRY CONSTRUCTION SHALL BE AS INDICATED ON THE DRAWING
   a. ALL CMU WALLS SHALL BE CONSTRUCTED WITH 8 INCH NOMINAL UNITS, UNO
   b. COMPREHENSIVE STRENGTH OF CONCRETE MASONRY (f'm):
   c. ALL CMU WALLS SHALL BE CENTERED ON FOOTINGS, UNO
   d. CMU WALLS REINFORCEMENT
      i. EXTERIOR BRG WALLS: #5 @ 24" OC MAX, TYP, UNO
      ii. INTERIOR BRG WALLS: #5 @ 24" OC MAX, TYP, UNO
   e. ADDITIONAL BAR SIZES AND LOCATIONS ARE INDICATED ON THE DRAWING
   f. 'TC-X' – INDICATES TIE COLUMN, SEE SCHEDULE S5.06
   g. 'CC-X' – INDICATES CONCRETE COLUMNS, SEE SCHEDULE S5.06
   h. NON-LOAD BRG WALLS ARE NOT SHOWN. SEE ARCH DWGS FOR LOCATIONS OF ALL NON-LOAD BRG WALLS.
   i. SEE TYPICAL MASONRY DETAILS ON SHEETS S4.01 AND S4.02 FOR ADDITIONAL INFORMATION AND ADDITIONAL LOCATIONS OF REINFORCEMENT NOT CALLED OUT IN THESE NOTES OR ON THIS PLAN.
   j. LOAD BEARING WALLS & EXTERIOR WALLS: 2000 PSI
4. GENERAL NOTES
   a. SEE GENERAL NOTES SHEETS S1.00 & 1.01 FOR ADDITIONAL INFORMATION

KEYED NOTES:

1. RE-ENTRY BARS: PLACE (2) #4 x 4'-0" LONG @ 3" OC AND 3" CLR FROM CORNER AT MID-DEPTH OF THE SLAB. CENTER BARS ON CORNER.
2. SLAB ON GRADE CONTROL JOINT (CJ) SEE DETAIL 1/S3.01.
3. HSS4x4x1/4", SEE S3.03 FOR BASE PLATE.

FOR PERMIT & BIDDING ONLY

AVCON
TRANSFORMING TODAYS IDEAS INTO TOMORROW'S REALITY
Michael Baker INTERNATIONAL
4211 W. BOY SCOUT BLVD
SUITE 500
TAMPA, FL 33607
FLORIDA LICENSE # AA 26002484
JEFFREY YEAGER, P.E.
FL LICENSE NO.: 62853

NO.	DATE	REVISION	BY

FOUNDATION PLAN - OFFICE

100% BID DRAWINGS

AIRPORT TERMINAL AND HANGAR DEVELOPMENT

PREPARED FOR

DEFUNIAK SPRINGS MUNICIPAL AIRPORT

DESIGNED BY:	AJM
DRAWN BY:	AJM
CHECKED BY:	JY
APPROVED BY:	JY
PROJECT NO:	2019.028.01
DATE:	11/1/2021

SHEET NUMBER

S2.00

THIS DOCUMENT CONTAINS PRIVILEGED AND PROPRIETARY INFORMATION, ALL OF WHICH IS EXPRESSLY PROVIDED BY AVCON, INC., FOR USE BY THE INTENDED RECIPIENT, AND FOR A SPECIFIC PURPOSE, WITHOUT THE EXPRESS WRITTEN CONSENT OF AVCON, INC. ANY DISTRIBUTION, REPRODUCTION, OR OTHER USE OF THIS DOCUMENT, IN WHOLE OR IN PART, IS STRICTLY PROHIBITED.

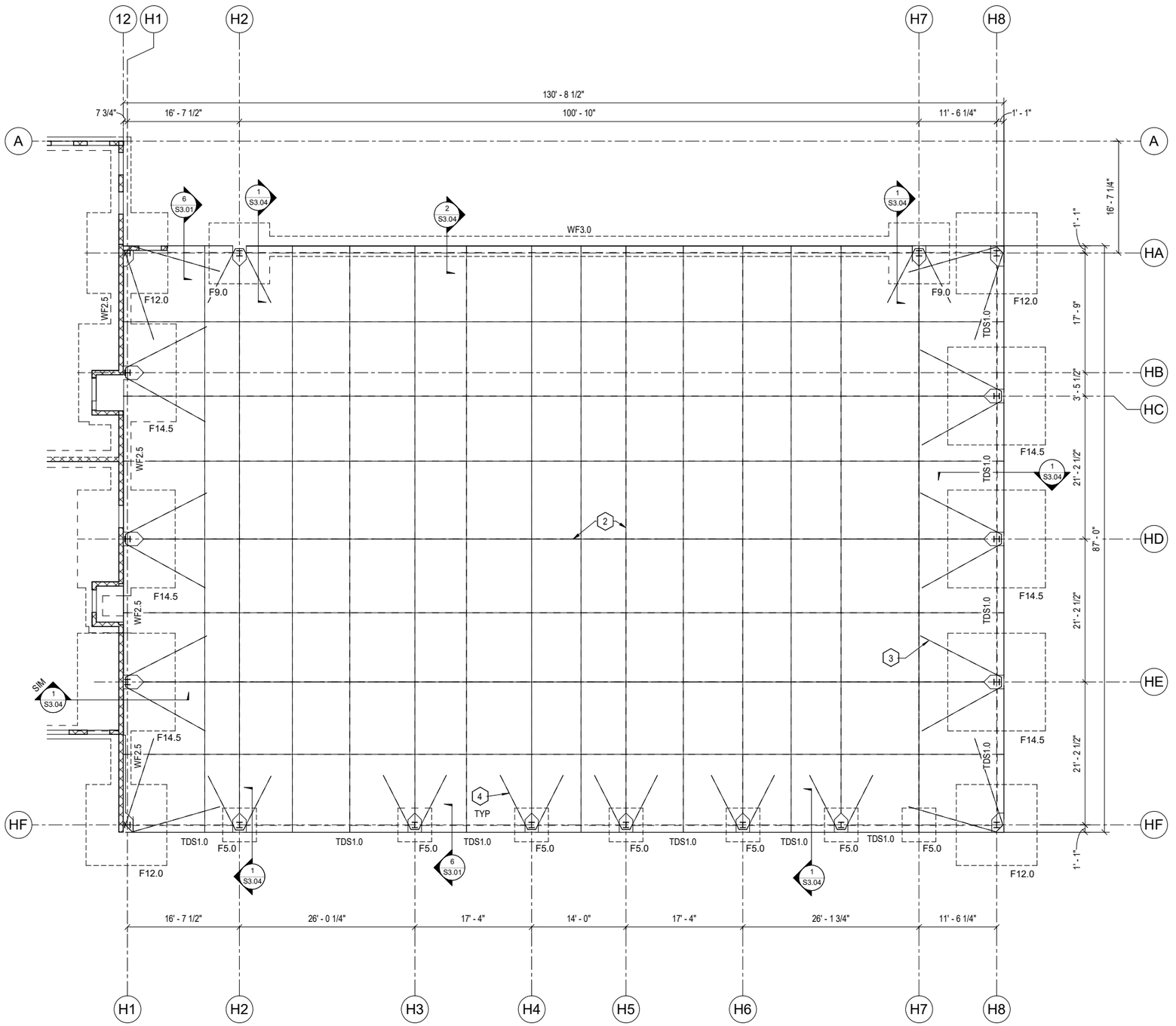

1 1ST FLOOR FOUNDATION PLAN - HANGAR
1/8" = 1'-0"

PRE-ENGINEERED METAL BUILDING FOUNDATION PLAN NOTES

1. FLOOR SLAB CONSTRUCTION SHALL BE 8" THICK CONCRETE SLAB-ON-GRADE REINFORCED WITH #5 @ 8" OC, EA WAY PLACED AT MID-DEPTH SLAB AND NOVEMESH AT THE RATE OF 24 #/CY OF CONCRETE.
   a. SLAB SHALL BE PLACED OVER VAPOR RETARDANT ON COMPACTED SUB-GRADE.
   b. SLAB-ON-GRADE CONSTRUCTION, SEE DETAILS 1 THRU 3 /S3.01
   c. T/SLAB EL = 0'-0" – REFER TO CIVIL DWGS FOR REFERENCE ELEVATION
   d. REFERENCE ARCHITECTURAL, MECHANICAL, ELECTRICAL, AND PLUMBING DRAWINGS FOR FLOOR SLOPES, DRAINS, AND DEPRESSION LOCATIONS.
   e. MAINTAIN SLAB THICKNESS AT ALL FLOOR SLOPES, DRAINS, AND DEPRESSIONS.
   f. REFERENCE ARCHITECTURAL, MECHANICAL, AND ELECTRICAL DRAWINGS FOR CONCRETE EQUIPMENT PAD LOCATIONS, SEE DETAIL 4/S3.01
2. FOOTING CONSTRUCTION SHALL BE AS INDICATED ON THE DRAWING
   a. PRELIMINARY REACTIONS HAVE BEEN DEVELOPED BY AVCON, INC FOR INITIAL DESIGN OF THE FOUNDATIONS. GC SHALL EXPECT THE FOUNDATION SIZES AND REINFORCING TO CHANGE ONCE AVCON, INC REVIEWS THE FINAL REACTIONS PREPARED BY THE PRE-ENGINEERED METAL BUILDING MANUFACTURER'S PROFESSIONAL ENGINEER.
   b. SEE FOUNDATION SCHEDULE ON SHEET S5.06 FOR THE FOLLOWING:
      i. 'WFX.X' – INDICATES WALL FOOTING
      ii. 'FX.X' – INDICATES SPREAD FOOTING
      iii. 'TDSX.X' – INDICATES TURN DOWN SLAB
   c. T/WALL FTG EL = -1-4" UNO
   d. T/SPREAD FTG EL = -1'-4" UNO
   e. CONDUIT AND PIPE PENETRATIONS: STEP AND/OR LOWER FOUNDATIONS WHERE SHOWN AND AS NECESSARY TO AVOID INTERFERENCE WITH OTHER TRADES. SEE FOUNDATION DETAILS 7/S3.01 AND 1/S3.02
   f. FOUNDATION REINFORCEMENT AT CORNERS AND INTERSECTIONS: SEE 5/S3.01
   g. SEE FOUNDATION DETAILS FOR ADDITIONAL INFORMATION.
3. GENERAL NOTES
   a. SEE GENERAL NOTES SHEETS S1.00 & 1.01 FOR ADDITIONAL INFORMATION

KEYED NOTES: ⬡

1. RE-ENTRY BARS: PLACE (2) #4 x 4'-0" LONG @ 3" OC AND 3" CLR FROM CORNER AT MID-DEPTH OF THE SLAB
2. SLAB ON GRADE CONTROL JOINTS (CJ) SEE DETAIL 1/S3.01
3. #5 x 20'-0" HAIRPIN EA LEG, TYP. ALONG GRID LINES H1 & H8 - MUST BE PLACED TIGHT TO EXTERIOR COLUMN FLANGE.
4. #5 x 12'-0" HAIRPIN EA LEG, TYP. ALONG GRIDLINES HA & HF - MUST BE PLACED TIGHT TO EXTERIOR COLUMN FLANGE.

FOR PERMIT & BIDDING ONLY

AVCON
TRANSFORMING TODAYS IDEAS INTO TOMORROW'S REALITY
Michael Baker INTERNATIONAL
4211 W. BOY SCOUT BLVD
SUITE 500
TAMPA, FL 33607
FLORIDA LICENSE # AA 26002484
JEFFREY YEAGER, P.E.
FL LICENSE NO.: 62853

NO.	DATE	REVISION	BY

FOUNDATION PLAN - HANGAR

100% BID DRAWINGS

AIRPORT TERMINAL AND HANGAR DEVELOPMENT

PREPARED FOR
DEFUNIAK SPRINGS MUNICIPAL AIRPORT

DESIGNED BY:	AJM
DRAWN BY:	AJM
CHECKED BY:	JY
APPROVED BY:	JY
PROJECT NO:	2019.028.01
DATE:	11/1/2021

SHEET NUMBER
S2.01

THIS DOCUMENT CONTAINS PRIVILEGED AND PROPRIETARY INFORMATION, ALL OF WHICH IS EXPRESSLY PROVIDED BY AVCON, INC., FOR USE BY THE INTENDED RECIPIENT, AND FOR A SPECIFIC PURPOSE. WITHOUT THE EXPRESS WRITTEN CONSENT OF AVCON, INC. ANY DISTRIBUTION, REPRODUCTION, OR OTHER USE OF THIS DOCUMENT, IN WHOLE OR IN PART, IS STRICTLY PROHIBITED.

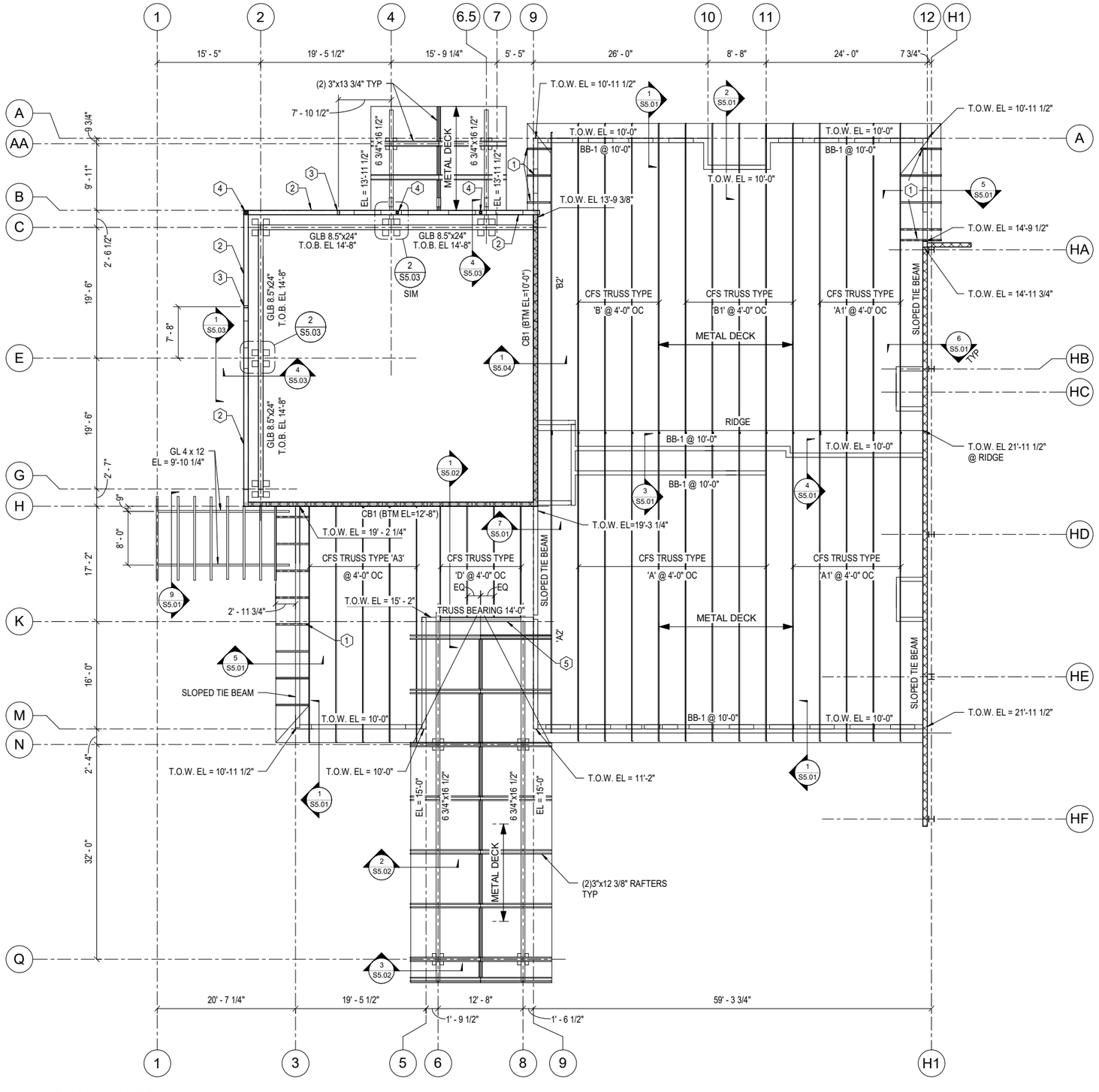

① ROOF PLAN - OFFICE
1/8" = 1'-0"

ROOF PLAN NOTES:

1. ROOF CONSTRUCTION SHALL CONSIST OF 1-1/2" x 20 GA. TYPE 'B' GALV G90 METAL DECK ON PRE-ENGINEERED CFS TRUSSES SPACED AT 4'-0" OC, MAX.
   a. CONNECT METAL DECK TO TRUSSES WITH #12 TEK SCREWS AT 36/7 PATTERN OF THE SUPPORTS AND 12" OC AT EXTREME ENDS.
   b. METAL DECK SIDE LAPS SHALL BE (1) #10 TEK SCREWS BETWEEN EACH SUPPORT.
   c. DECK FASTENERS SHALL BE CONCEALED AND NOT VISIBLE FROM THE BOTTOM FINISH OF EXPOSED DECK.
2. CANOPY ROOF CONSTRUCTION SHALL CONSIST OF 2" x 20 GA. VERSA-DEK LS ON GLULAM BEAMS SPACED AS SHOWN.
   a. CONNECT DECK TO GLB'S WITH #12 TEK SCREWS 3" MINIMUM PENETRATION AT 24/4 PATTERN AT SUPPORTS AND 6" OC AT EXTREME ENDS.
   b. SIDE LAP FASTENERS SHALL BE (2) #10 TEK SCREWS BETWEEN EACH SUPPORT.
   c. DECK FASTENERS SHALL BE CONCEALED AND NOT VISIBLE FROM THE BOTTOM FINISH OF EXPOSED DECK.
3. CFS TRUSSES
   a. CFS TRUSSES SHALL BEAR IN MASONRY WALL – PROVIDE BEARING STIFFENER AT EACH BEARING LOCATION
   b. ATTACH CFS TRUSSES TO EXTERIOR MASONRY WALLS AS INDICATED ON THE DRAWINGS
   c. PROVIDE CONTINUOUS CFS BLOCKING / CHORD MEMBERS BETWEEN TRUSSES ON TOP OF BEARING WALLS. BLOCKING DEPTH SHALL MATCH THE DEPTH OF THE TRUSS AT BEARING. THE TOP FLANGE SHALL HAVE A MINIMUM THICKNESS OF 54 MILS AND SHALL BE SLOPED TO MATCH THE PITCH OF THE ROOF TO PROVIDE CONNECTION FOR THE METAL DECK. THE BLOCKING SHALL BE CONNECTED TO THE TOP OF THE WALL TO RESIST AN IN-PLANE LATERAL LRFD LOAD OF 400 PLF.
   d. PROVIDE CONTINUOUS CLOSURE PLATES WITH A MINIMUM THICKNESS OF 54 MILS AT RIDGE, HIP, AND EAVE LOCATIONS. CONNECT THE PLATES TO SUPPORTING MEMBERS WITH #10 TEK SCREWS OR WELDS SPACED NO MORE THAN 12" OC
4. GLULAM FRAMING
   a. 'GLB-X' DESIGNATED GLULAM BEAM
   b. GLULAM COLUMNS SHALL BE LACED PER DETAIL 5/S5.04
5. MASONRY/CONCRETE
   a. SEE BOND BEAM / CONCRETE BEAM / TIE BEAM SCHEDULE FOR THE FOLLOWING:
      i. 'BB-X' – INDICATES BOND BEAM, SEE SCHEDULE 1/S5.06
      ii. 'TB-X' - INDICATES TIE BEAM, SEE SCHEDULE 1/S5.06
      iii. 'CB-X' - INDICATES CONCRETE BEAM, SEE SCHEDULE 1/S5.06
   b. TOP OF WALL EL SHALL BE AS INDICATED ON THE DRAWINGS
   c. TOP OF INTERIOR WALL SHALL BE TERMINATED WITH A 8" x 16" DEEP BOND BEAM W/ (2) #5 CONTINUOUS TOP & BOTTOM OR WITH TIE BEAM AS ON THE EXTERIOR WALL
6. GENERAL NOTES
   a. SEE GENERAL NOTES FOR ADDITIONAL INFORMATION

KEYED NOTES: ⬡

1. COLD-FORMED STEEL OUTLOOKERS BY TRUSS MANUFACTURER. 2 1/2" DEEP x 54 MILS MINIMUM @ 2'-0" OC MAX. SEE DETAIL 5/S5.01
2. CONT HSS8x4x5/16" @ T/STL = 13'-0". SEE DETAIL 2 & 4/S5.03 FOR CONNECTION TO GLC SEE DETAIL 8/S5.01 FOR CONNECTION TO CMU WALLS. CONNECT TO CORNER GLC IN BOTH DIRECTIONS.
3. HSS8x4x5/16" COLUMN BETWEEN CFS WALL & STOREFRONT. WELD TO INTERMEDIATE & TOP HSS BEAM W/BEVEL WELD & PARTIAL PENETRATION GROOVE WELD.
4. HSS 4x4x1/4" COLUMNS @ ENTRY JAMBS. WELD TO UNDERSIDE OF HSS8x4x5/16" W/ 1/4" FILLET WELD ALL AROUND.
5. HSS12x6x5/16" HEADER, BOTTOM ELEVATION = 7'-8".

FOR PERMIT & BIDDING ONLY

AVCON
TRANSFORMING TODAYS IDEAS INTO TOMORROW'S REALITY
Michael Baker INTERNATIONAL
4211 W. BOY SCOUT BLVD
SUITE 500
TAMPA, FL 33607
FLORIDA LICENSE # AA 26002484
JEFFREY YEAGER, P.E.
FL LICENSE NO.: 62853

NO.	DATE	REVISION	BY

ROOF PLAN - OFFICE

100% BID DRAWINGS

AIRPORT TERMINAL AND HANGAR DEVELOPMENT

PREPARED FOR
DEFUNIAK SPRINGS MUNICIPAL AIRPORT

DESIGNED BY:	AJM
DRAWN BY:	AJM
CHECKED BY:	JY
APPROVED BY:	JY
PROJECT NO:	2019.028.01
DATE:	11/1/2021

SHEET NUMBER
S2.02

THIS DOCUMENT CONTAINS PRIVILEGED AND PROPRIETARY INFORMATION, ALL OF WHICH IS EXPRESSLY PROVIDED BY AVCON, INC., FOR USE BY THE INTENDED RECIPIENT, AND FOR A SPECIFIC PURPOSE WITHOUT THE EXPRESS WRITTEN CONSENT OF AVCON, INC. ANY DISTRIBUTION, REPRODUCTION, OR OTHER USE OF THIS DOCUMENT, IN WHOLE OR IN PART, IS STRICTLY PROHIBITED.

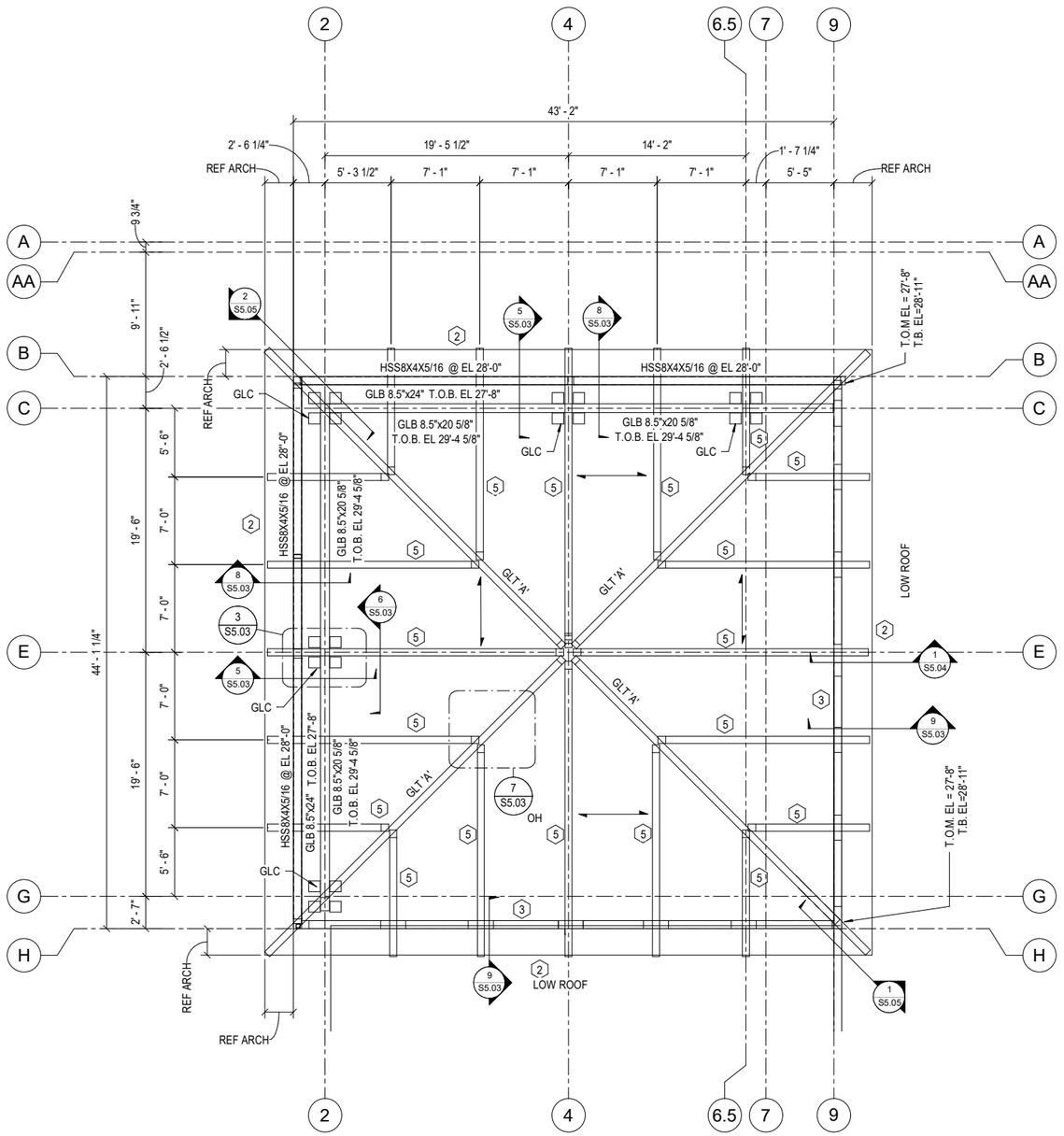

1 HIGH ROOF PLAN - OFFICE
3/16" = 1'-0"

HIGH ROOF PLAN NOTES

1. ROOF CONSTRUCTION SHALL CONSIST OF 2" x 20 GA. VERSA-DEK ACOUSTICAL LS METAL DECK ON PRE-ENGINEERED GLULAM TRUSSES, BEAMS OR PURLINS.
   a. CONNECT DECK TO GLT'S AND GLB'S WITH #12 TEK SCREWS 3" MINIMUM PENETRATION AT 24/4 PATTERN AT SUPPORTS AND 6" OC AT EXTREME ENDS.
   b. CONNECT DECK TO STEEL OR CFS SUPPORTS WITH #12 TEK SCREWS AT 24/4 PATTERN AT SUPPORTS AND 6" OC AT EXTRENE ENDS.
   c. SIDE LAP FASTENERS SHALL BE (2) #10 TEK SCREWS BETWEEN EACH SUPPORT
   d. DECK FASTENERS SHALL BE CONCEALED AND NOT VISIBLE FROM THE BOTTOM FINISH OF EXPOSED DECK.
2. MASONRY/CONCRETE
   a. SEE BOND BEAM / CONCRETE BEAM / TIE BEAM SCHEDULE FOR THE FOLLOWING:
      i. 'BB-X' – INDICATES BOND BEAM, SEE SCHEDULE 1/S5.06
      ii. 'TB-X' - INDICATES TIE BEAM, SEE SCHEDULE 1/S5.06
      iii. 'CB-X' - INDICATES CONCRETE BEAM, SEE SCHEDULE 1/S5.06
   b. TOP OF WALL EL SHALL BE AS INDICATED ON THE DRAWINGS
   c. TOP OF INTERIOR WALL SHALL BE TERMINATED WITH A 8" x 16" DEEP BOND BEAM W/ (2) #5 CONTINUOUS TOP & BOTTOM OR WITH TIE BEAM AS ON THE EXTERIOR WALL.
3. GLULAM NOTES
   a. GLT "X" - DESIGNATES GLULAM TRUSS
   b. GLB - DESIGNATES GLULAM BEAMS
   c. GLC - DESIGNATES GLULAM COL. REF DETAIL 3/S5.03
   d. HANG GLB 3.5'S FROM GLT "A" & GLB 6 3/4" W/CENTER WEB OF PURLINS & LAG SCREWS THRU TOP OF GLB OR GLT.
   e. DOUBLE TAPER TOPS OF GLT'S FOR METAL DECK BEARING AND CONNECTIONS.
   f. GLULAM COLUMNS SHALL BE LACED TOGETHER PER DETAIL 5/S5.04
   g. TAPER TOPS OF PERIMETER GLB'S FOR METAL DECK BEARING AND CONNECTIONS.
4. GENERAL NOTES
   a. SEE GENERAL NOTES FOR ADDITIONAL INFORMATION

KEYED NOTES: ⬡

1. FOR TRUSS CONNX SEE 1/S5.05 FOR INFO.
   1A. CONNECT METAL DECK TO ALL GLULAM PURLINS, BEAMS, AND TRUSSES W/ #12 TEK SCREWS (3" MIN PENETRATION) @ 36/7 PATTERN AND 12" OC @ EXTREME ENDS.
2. CONT BENT PLATE 3x3x5/16" - ATTACH TO TOP OF GLB & GLT W/ 1/2" DIA x 6" LAG SCREW @ EA LOCATION AND AT EA END.
3. TB-4 @ EL = 28'-11" BETWEEN GLB ALONG GRID LINES 'H' & '9'. LEAVE 2'-0" WIDE POCKET @ EACH GLB.
4. HSS8x4x5/16" COLUMN ATTACHED TO UNDERSIDE OF HSS BEAM.
5. GLB 6 3/4" x 17 7/8" (SL)

FOR PERMIT & BIDDING ONLY

AVCON
TRANSFORMING TODAYS IDEAS INTO TOMORROW'S REALITY
Michael Baker INTERNATIONAL
4211 W. BOY SCOUT BLVD
SUITE 500
TAMPA, FL 33607
FLORIDA LICENSE # AA 26002484
JEFFREY YEAGER, P.E.
FL LICENSE NO.: 62853

NO	DATE	REVISION	BY

HIGH ROOF PLAN OFFICE
100% BID DRAWINGS

AIRPORT TERMINAL AND HANGAR DEVELOPMENT
PREPARED FOR
DEFUNIAK SPRINGS MUNICIPAL AIRPORT

DESIGNED BY:	AJM
DRAWN BY:	AJM
CHECKED BY:	JY
APPROVED BY:	JY
PROJECT NO:	2019.028.01
DATE:	11/1/2021

SHEET NUMBER
S2.03

THIS DOCUMENT CONTAINS PRIVILEGED AND PROPRIETARY INFORMATION, ALL OF WHICH IS EXPRESSLY PROVIDED BY AVCON, INC., FOR USE BY THE INTENDED RECIPIENT, AND FOR A SPECIFIC PURPOSE, WITHOUT THE EXPRESS WRITTEN CONSENT OF AVCON, INC. ANY DISTRIBUTION, REPRODUCTION, OR OTHER USE OF THIS DOCUMENT, IN WHOLE OR IN PART, IS STRICTLY PROHIBITED.

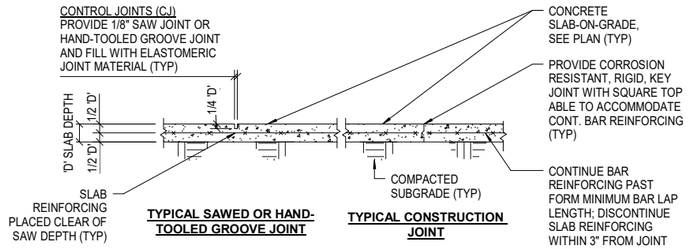

SLAB-ON-GRADE NOTES

1. FORMED CONSTRUCTION JOINTS AND HAND-TOOLED CONTROL JOINTS ARE EQUAL SUBSTITUTES. PROVIDE HAND-TOOLED GROOVE JOINTS AT EXTERIOR SLABS ONLY AND WHERE SAWED JOINTS SAW BLADE IS OBSTRUCTED.
2. SAWED CONTROL JOINTS SHALL BE PLACED AS SOON AS POSSIBLE WITHOUT RAVELING CONCRETE OR DISLODGING AGGREGATE. CLEAN SAWED/TOOLED JOINT AND APPLYING JOINT MATERIAL PER MANUFACTURER'S INSTRUCTIONS.
3. SEE PLAN FOR JOINT SPACING. DO NOT EXCEED 30xD (EACH DIRECTION) JOINT SPACING OR MAXIMUM 10'-0" FOR 4" SLAB. WHERE TOP OF SLAB SURFACES ARE TO BE FINISHED WITH TILE OR OTHER FEATURES, GENERAL CONTRACTOR SHALL COORDINATE JOINT LOCATIONS WITH TILE MORTAR JOINTS. JOINT PATTERN SHALL NOT EXCEED 1.5 TO 1 ASPECT RATIO.

① TYPICAL SLAB-ON-GRADE DETAIL
3/4" = 1'-0"

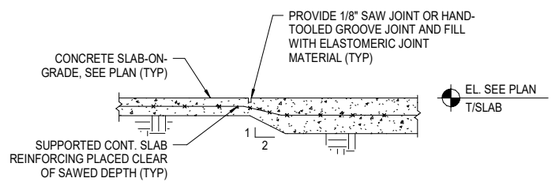

NOTE:

1. REFER TO TYPICAL SLAB-ON-GRADE DETAIL FOR ALL OTHER INFORMATION.

② TYPICAL SLAB TRANSITION DETAIL
3/4" = 1'-0"

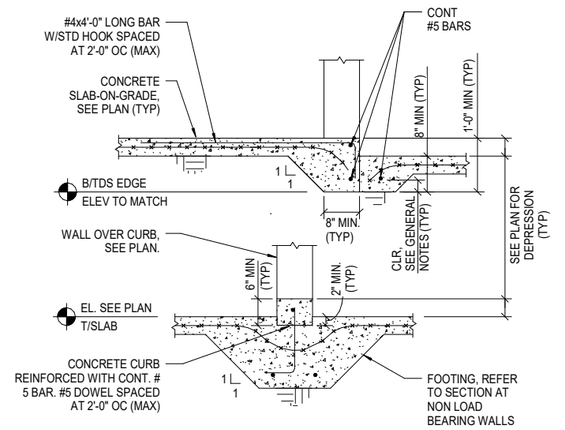

③ TYPICAL SLAB DEPRESSION AND CURB DETAIL
3/4" = 1'-0"

④ TYPICAL HOUSEKEEPING PAD DETAIL
3/4" = 1'-0"

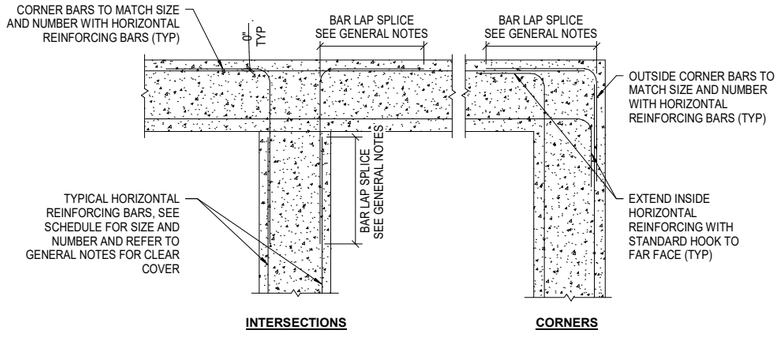

⑤ TYPICAL HORIZ REINF AT FOOTINGS/BEAMS/WALLS
3/4" = 1'-0"

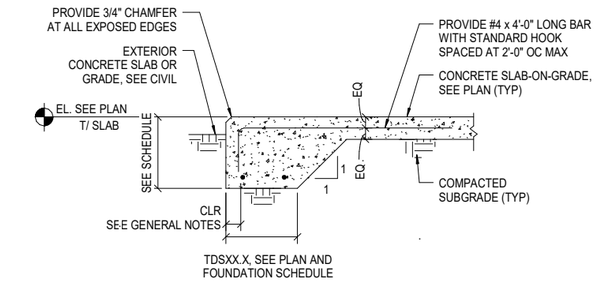

⑥ TYPICAL TDS EDGE DETAIL
3/4" = 1'-0"

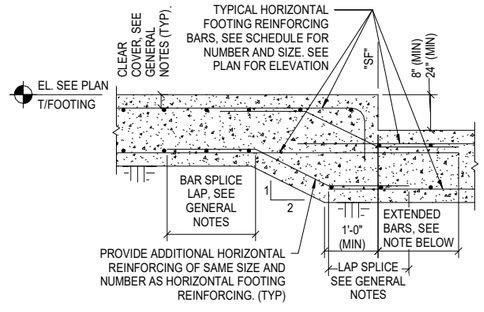

NOTES:

1. "SF" INDICATES STEP FOOTING (AS REQUIRED). GENERAL CONTRACTOR SHALL COORDINATE STEP FOOTING LOCATIONS WITH WALL PIPE SLEEVES.
2. EXTEND TYPICAL HORIZONTAL BAR 48xBAR DIA. BEYOND STEP FOOTING VERTICAL CONCRETE FACE WHERE POSSIBLE, ELSE PROVIDE STANDARD HOOK.

⑦ TYPICAL WALL STEP FOOTING DETAIL
3/4" = 1'-0"

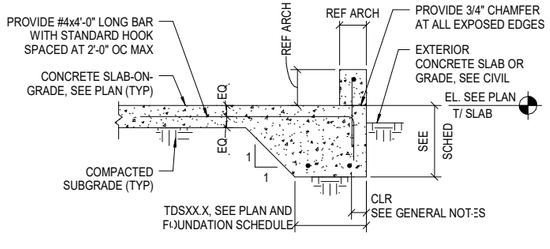

⑧ TYPICAL TDS EDGE W/CURB DETAIL
3/4" = 1'-0"

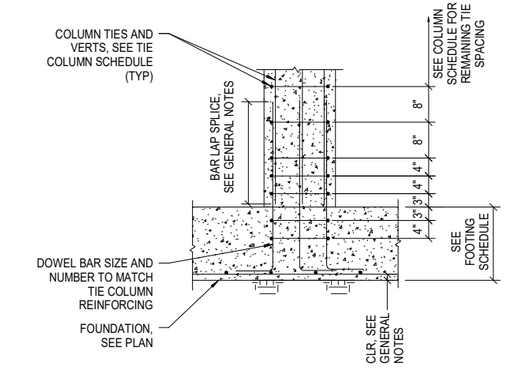

⑨ TYPICAL CONCRETE COLUMN (CC#)
3/4" = 1'-0"

FOR PERMIT & BIDDING ONLY

AVCON
TRANSFORMING TODAYS IDEAS INTO TOMORROW'S REALITY
Michael Baker INTERNATIONAL
4211 W. BOY SCOUT BLVD
SUITE 500
TAMPA, FL 33607
FLORIDA LICENSE # AA 26002484
JEFFREY YEAGER, P.E.
FL LICENSE NO.: 62853

NO.	DATE	REVISION	BY
1			

FOUNDATION DETAILS

100% BID DRAWINGS

AIRPORT TERMINAL AND HANGAR DEVELOPMENT

PREPARED FOR
DEFUNIAK SPRINGS MUNICIPAL AIRPORT

DESIGNED BY:	AJM
DRAWN BY:	AJM
CHECKED BY:	JY
APPROVED BY:	JY
PROJECT NO:	2019.028.01
DATE:	11/1/2021

SHEET NUMBER
S3.01

THIS DOCUMENT CONTAINS PRIVILEGED AND PROPRIETARY INFORMATION, ALL OF WHICH IS EXPRESSLY PROVIDED BY AVCON, INC., FOR USE BY THE INTENDED RECIPIENT, AND FOR A SPECIFIC PURPOSE WITHOUT THE EXPRESS WRITTEN CONSENT OF AVCON, INC. ANY DISTRIBUTION, REPRODUCTION, OR OTHER USE OF THIS DOCUMENT, IN WHOLE OR IN PART, IS STRICTLY PROHIBITED.

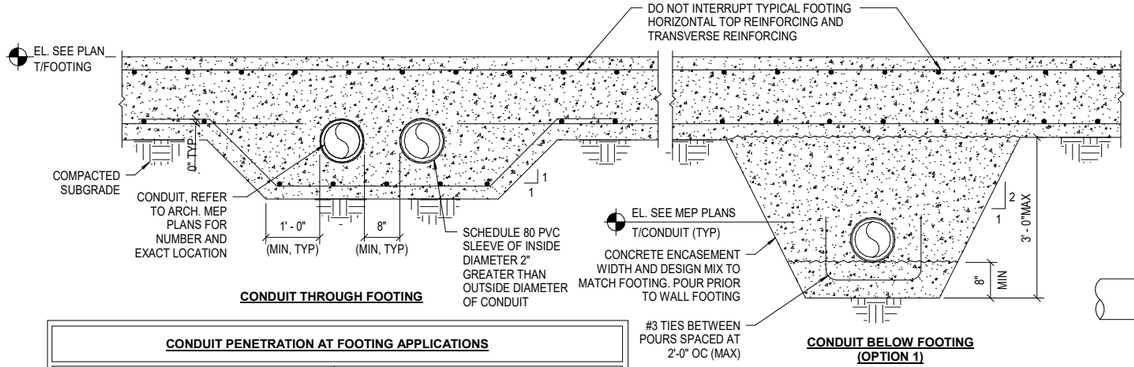

CONDUIT THROUGH FOOTING

CONDUIT BELOW FOOTING (OPTION 1)

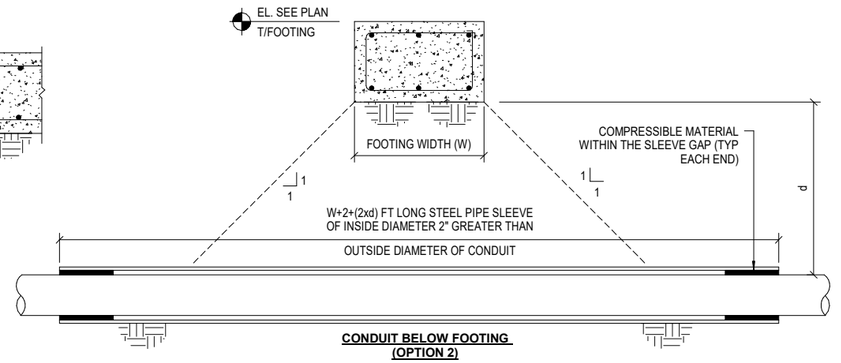

CONDUIT BELOW FOOTING (OPTION 2)

CONDUIT PENETRATION AT FOOTING APPLICATIONS

CONDITION	APPLICABLE DETAIL
TOP OF CONDUIT ELEVATION WITHIN 10" ABOVE OR BELOW TOP OF FOOTING ELEVATION	'TYPICAL WALL STEP FOOTING DETAIL' (CONDUIT PASSES THROUGH WALL ABOVE FOOTING)
TOP OF CONDUIT ELEVATION WITHIN 10" BELOW BOTTOM OF FOOTING ELEVATION	'CONDUIT THROUGH FOOTING' DETAIL.
TOP OF CONDUIT ELEVATION GREATER THAN 10" BELOW BOTTOM OF FOOTING ELEVATION	'CONDUIT BELOW FOOTING (OPTION 1)' OR 'CONDUIT BELOW FOOTING (OPTION 2)'

NOTES:

1. 'CONDUIT BELOW FOOTING (OPTION 2)' DETAIL SHALL NOT BE USED WHERE CONDUIT IS GREATER THAN 30 DEGREES FROM ORTHOGONAL (IN PLAN) WITH RESPECT TO THE WALL FOOTING.
2. FOR CONDUIT DIAMETERS, LOCATIONS, AND ELEVATIONS DEVIATING FROM THE CRITERIA ABOVE, CONTRACTOR SHALL NOTIFY THE ARCHITECT/ENGINEER IN WRITING FOR CLARIFICATION.

① TYPICAL CONDUIT PENETRATION AT FOOTING
3/4" = 1'-0"

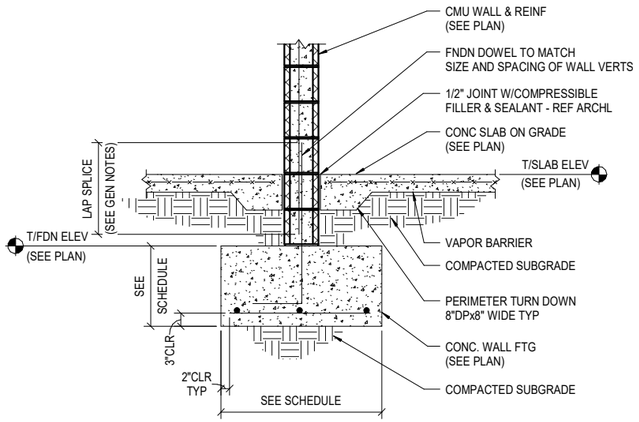

② INTERIOR MASONRY BEARING WALL DETAIL
3/4" = 1'-0"

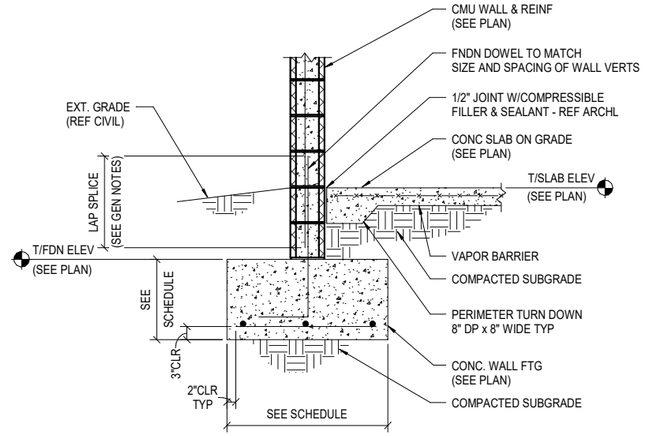

③ EXTERIOR MASONRY BEARING WALL DETAIL
3/4" = 1'-0"

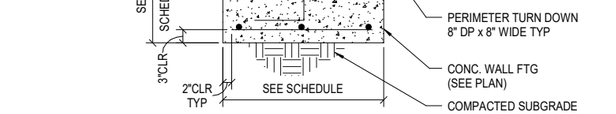

④ EXTERIOR MASONRY BEARING WALL AT DOOR OPENING
3/4" = 1'-0"

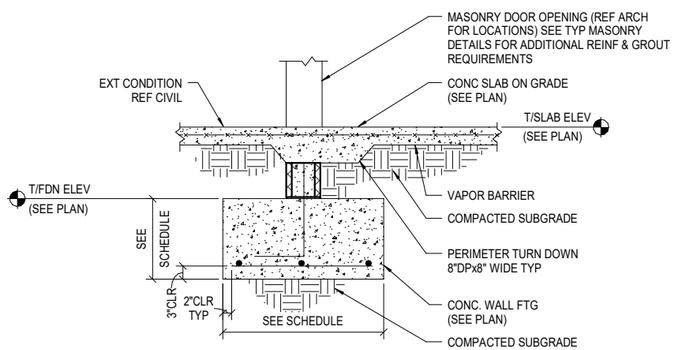

⑤ INTERIOR MASONRY BEARING WALL AT DOOR OPENING
3/4" = 1'-0"

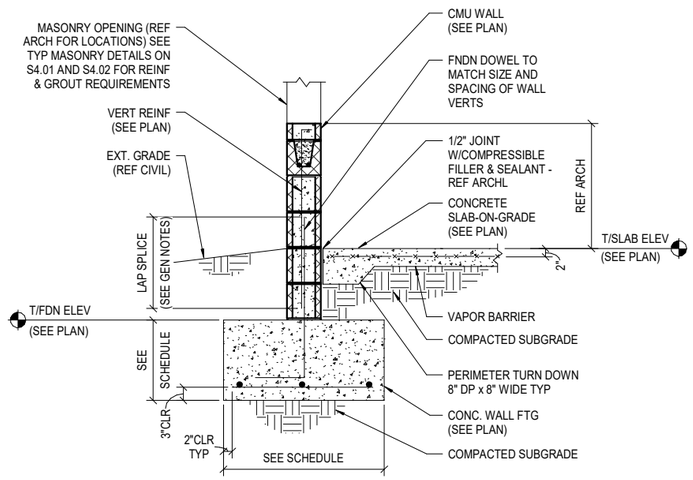

⑥ EXTERIOR MASONRY BEARING WALL @ WINDOW OPENING
3/4" = 1'-0"

FOR PERMIT & BIDDING ONLY

AVCON
TRANSFORMING TODAYS IDEAS INTO TOMORROW'S REALITY
Michael Baker INTERNATIONAL
4211 W. BOY SCOUT BLVD
SUITE 500
TAMPA, FL 33607
FLORIDA LICENSE # AA 26002484
JEFFREY YEAGER, P.E.
FL LICENSE NO.: 62853

NO.	DATE	REVISION	BY

FOUNDATION DETAILS

100% BID DRAWINGS

AIRPORT TERMINAL AND HANGAR DEVELOPMENT

PREPARED FOR
DEFUNIAK SPRINGS MUNICIPAL AIRPORT

DESIGNED BY:	AJM
DRAWN BY:	AJM
CHECKED BY:	JY
APPROVED BY:	JY
PROJECT NO:	2019.028.01
DATE:	11/1/2021

SHEET NUMBER

S3.02

THIS DOCUMENT CONTAINS PRIVILEGED AND PROPRIETARY INFORMATION, ALL OF WHICH IS EXPRESSLY PROVIDED BY AVCON, INC., FOR USE BY THE INTENDED RECIPIENT, AND FOR A SPECIFIC PURPOSE. WITHOUT THE E EXPRESS WRITTEN CONSENT OF AVCON, INC. ANY DISTRIBUTION, REPRODUCTION, OR OTHER USE OF THIS DOCUMENT, IN WHOLE OR IN PART, IS S TRICTLY PROHIBITED.

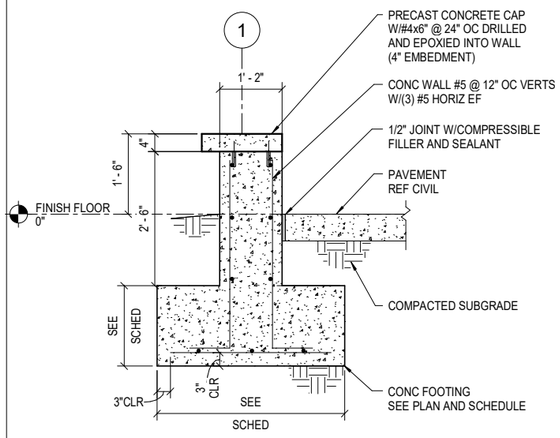

1 SECTION THRU WALL
3/4" = 1'-0"

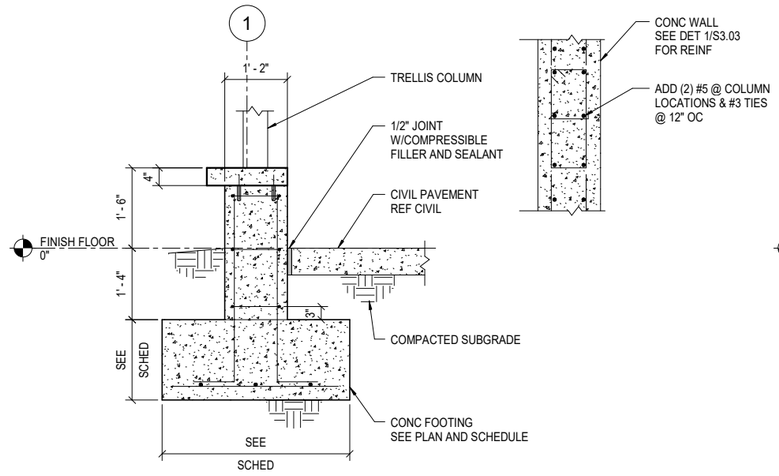

2 SECTION THRU WALL AT COLUMNS
3/4" = 1'-0"

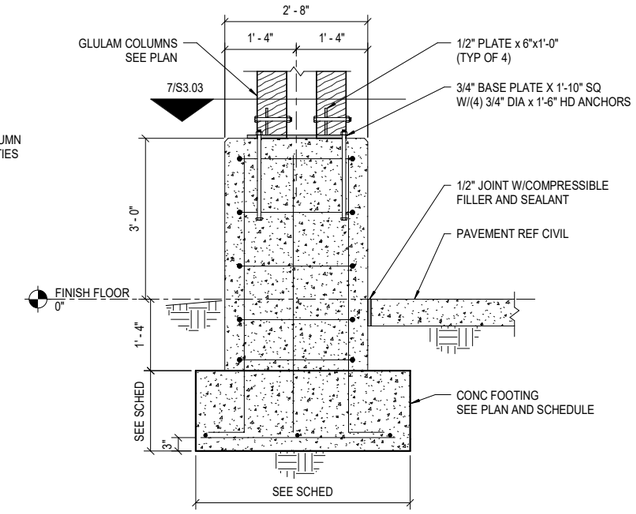

3 SECTION THRU CANOPY POST
3/4" = 1'-0"

4 TYPICAL ANCHOR BOLT PROJECTION DETAIL
3/4" = 1'-0"

5 CORNER COLUMN PLAN VIEW
3/4" = 1'-0"

6 WOOD COLUMN PLAN
3/4" = 1'-0"

7 CANOPY COLUMN PLAN
3/4" = 1'-0"

8 BASE PLATE DETAIL
3/4" = 1'-0"

FOR PERMIT & BIDDING ONLY

AVCON
TRANSFORMING TODAYS IDEAS INTO TOMORROW'S REALITY
Michael Baker INTERNATIONAL
4211 W. BOY SCOUT BLVD
SUITE 500
TAMPA, FL 33607
FLORIDA LICENSE # AA 26002484
JEFFREY YEAGER, P.E.
FL LICENSE NO.: 62853

NO.	DATE	REVISION	BY

FOUNDATION DETAILS

100% BID DRAWINGS

AIRPORT TERMINAL AND HANGAR DEVELOPMENT

PREPARED FOR
DEFUNIAK SPRINGS MUNICIPAL AIRPORT

DESIGNED BY:	AJM
DRAWN BY:	AJM
CHECKED BY:	JY
APPROVED BY:	JY
PROJECT NO:	2019.028.01
DATE:	11/1/2021

SHEET NUMBER

S3.03

THIS DOCUMENT CONTAINS PRIVILEGED AND PROPRIETARY INFORMATION, ALL OF WHICH IS EXPRESSLY PROVIDED BY AVCON, INC., FOR USE BY THE INTENDED RECIPIENT, AND FOR A SPECIFIC PURPOSE WITHOUT THE EXPRESS WRITTEN CONSENT OF AVCON, INC. ANY DISTRIBUTION, REPRODUCTION, OR OTHER USE OF THIS DOCUMENT, IN WHOLE OR IN PART, IS STRICTLY PROHIBITED.

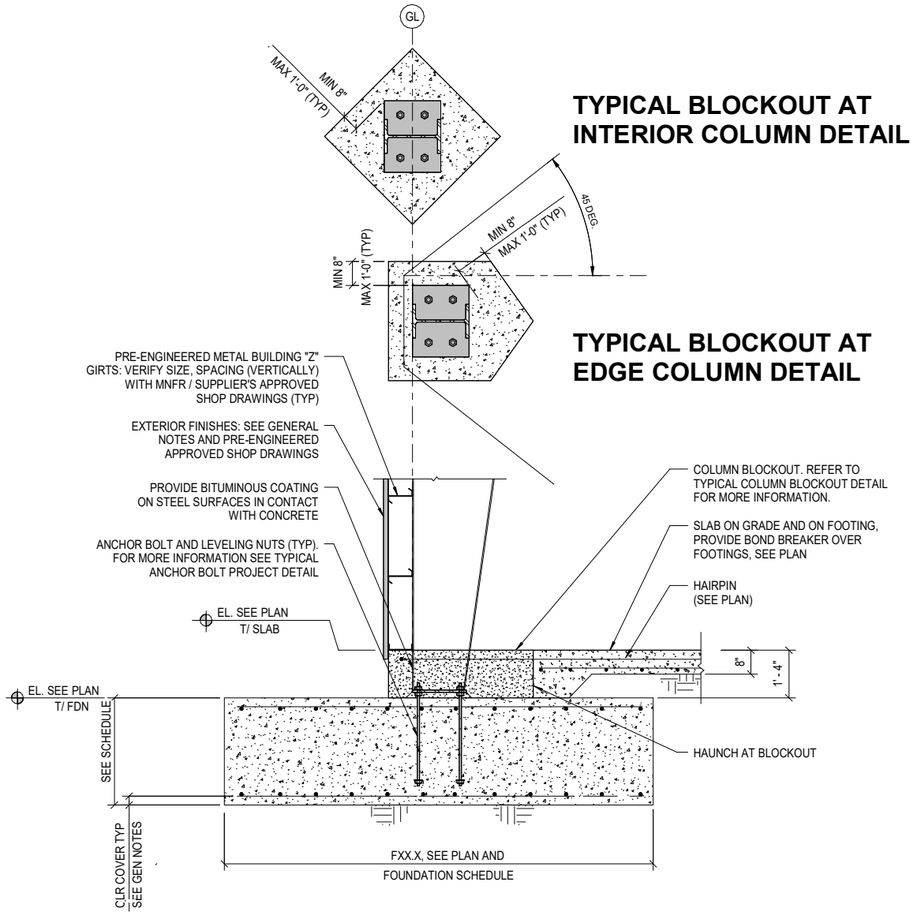

1 PEMB FOUNDATION DETAIL
1/2" = 1'-0"

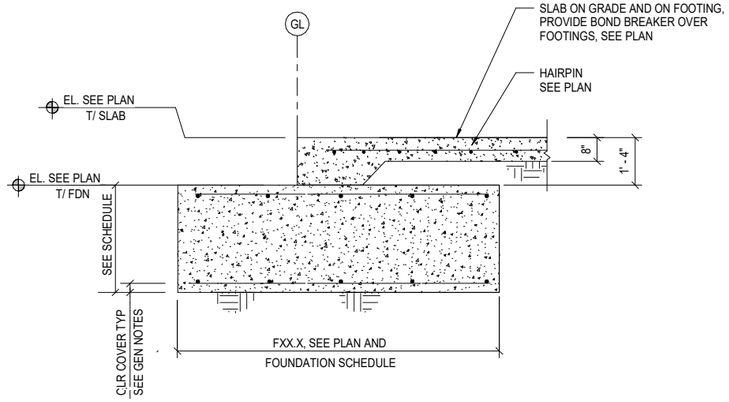

2 PEMB FOUNDATION DETAIL AT HANGER DOOR
1/2" = 1'-0"

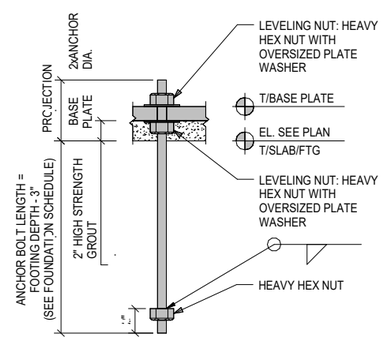

NOTE:

1. UNLESS NOTED OTHERWISE, ALL BOLTS SHALL BE TIGHTENED TO A "SNUG TIGHT" PLUS 1/2 TURN.
2. REFER TO THE APPROVED PEMB SHOP DRAWINGS FOR THE NUMBER AND DIAMETER OF ANCHOR BOLTS.

3 PEMB ANCHOR BOLT DETAIL
3/4" = 1'-0"

FOR PERMIT & BIDDING ONLY

AVCON
TRANSFORMING TODAYS IDEAS INTO TOMORROW'S REALITY

Michael Baker INTERNATIONAL
4211 W. BOY SCOUT BLVD
SUITE 500
TAMPA, FL 33607
FLORIDA LICENSE # AA 26002484

JEFFREY YEAGER, P.E.
FL LICENSE NO.: 62853

NO.	DATE	REVISION	BY

PEMB DETAILS

100% BID DRAWINGS

AIRPORT TERMINAL AND HANGAR DEVELOPMENT

PREPARED FOR
DEFUNIAK SPRINGS MUNICIPAL AIRPORT

DESIGNED BY:	AJM
DRAWN BY:	AJM
CHECKED BY:	JY
APPROVED BY:	JY
PROJECT NO:	2019.028.01
DATE:	11/1/2021

SHEET NUMBER
S3.04

THIS DOCUMENT CONTAINS PRIVILEGED AND PROPRIETARY INFORMATION, ALL OF WHICH IS EXPRESSLY PROVIDED BY AVCON, INC., FOR USE BY THE INTENDED RECIPIENT, AND FOR A SPECIFIC PURPOSE. WITHOUT THE E EXPRESS WRITTEN CONSENT OF AVCON, INC. ANY DISTRIBUTION, REPRODUCTION, OR OTHER USE OF THIS DOCUMENT, IN WHOLE OR IN PART, IS S TRICTLY PROHIBITED.

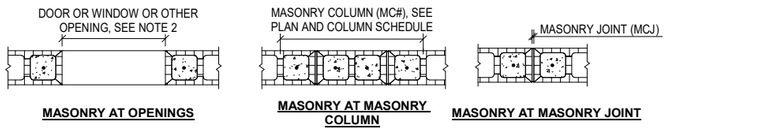

MASONRY AT OPENINGS

MASONRY AT MASONRY COLUMN

MASONRY AT MASONRY JOINT

MASONRY AT CORNER WITH NO MCJ

MASONRY AT CORNER WITH MCJ

MASONRY AT INTERSECTION WITH NO MCJ

MASONRY AT INTERSECTION WITH NO MCJ

MASONRY AT T-INTERSECTION WITH NO MCJ

MASONRY AT T-INTERSECTION WITH MCJ

MASONRY FILLED CELL NOTES:

1. SEE PLAN AND OTHER DETAILS FOR ADDITIONAL REINFORCED, GROUT-FILLED CELL LOCATIONS. TOP OF ALL WALLS SHALL CONSIST OF A BOND BEAM OR TIE BEAM. EXTEND ALL REINFORCED, GROUT-FILLED CELLS TO THE NEXT BOND BEAM OR TIE BEAM ABOVE AND TERMINATE VERTICAL BARS WITH STANDARD HOOK. TYPICALLY SPACED REINFORCED, GROUT-FILLED CELLS SHALL EXTEND AND TERMINATE AT TOP-MOST BOND BEAM OR TIE BEAM.
2. FOR OPENINGS GREATER THAN 12'-0" WIDE, PROVIDE TWO REINFORCED, GROUT-FILLED CELLS ON EACH SIDE OF OPENINGS.

① TYP PLAN LOCATIONS OF MASONRY GROUT FILLED CELLS
3/4" = 1'-0"

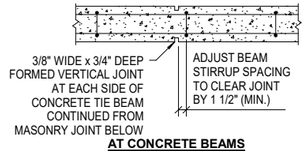

AT CONCRETE BEAMS AND TIE BEAMS

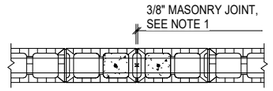

AT MASONRY BOND BEAMS

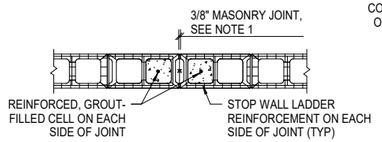

AT FOUNDATIONS

MASONRY JOINT NOTES

1. REFER TO ARCHITECTURAL DRAWINGS FOR LOCATION OF JOINT AND TYPE OF SEALANT. MASONRY CONTROL JOINT SPACING SHALL NOT EXCEED 3xWALL HEIGHT OR 30'-0" (MAX.).
2. CONTINUE HORIZONTAL BOND/TIE BEAM REINFORCEMENT THROUGH CONTROL JOINT

② TYPICAL MASONRY JOINT DETAIL
3/4" = 1'-0"

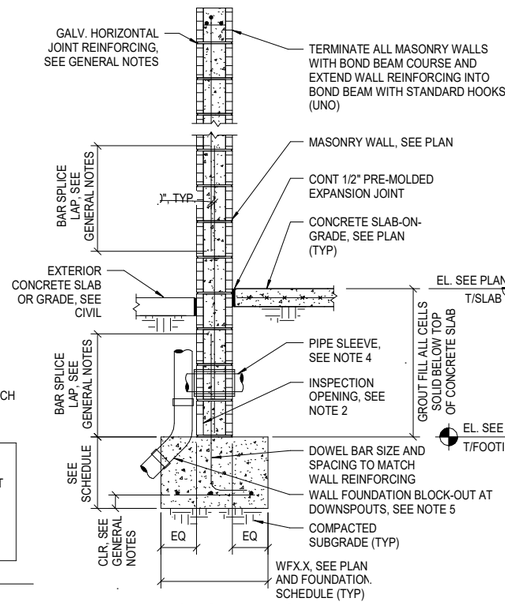

EXTERIOR LOAD BEARING MASONRY WALL

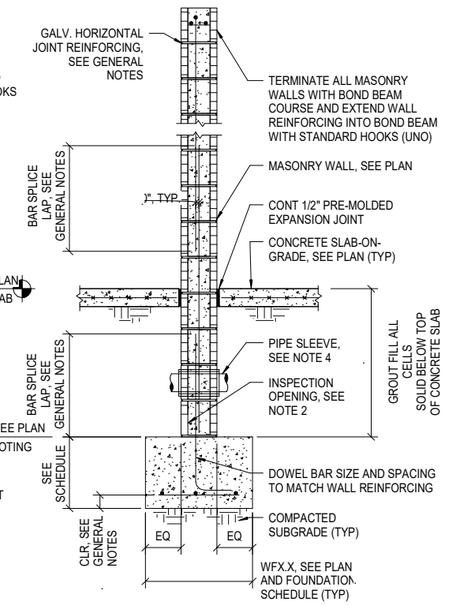

INTERIOR LOAD BEARING MASONRY WALL

LOAD BEARING MASONRY WALL NOTES:

1. MAXIMUM POUR LIFT HEIGHT SHALL BE 12'-0".
2. INSPECTION OPENINGS SHALL BE PROVIDED AT THE BOTTOM OF CELLS TO BE GROUT FILLED IN EACH POUR IN EXCESS OF 5 FEET IN HEIGHT AND SHALL BE SEALED BEFORE GROUTING, AFTER INSPECTION.
3. CENTER VERTICAL REINFORCING BARS AND MATCHING DOWELS WITHIN THE CELL AND SUPPORTED BARS AT A MAXIMUM 192xBAR DIAMETERS.
4. PROVIDE SCHEDULE 80 PVC SLEEVE OF INSIDE DIAMETER 2" GREATER THAN OUTSIDE DIAMETER OF CONDUIT, TYPICAL
5. COORDINATE CENTER OF DOWNSPOUT BLOCKOUT OF LENGTH PIPE DIAMETER + 4" WITH CENTER OF DOWNSPOUT. INTERRUPT CONTINUOUS FOOTING BAR AND TERMINATE WITH STANDARD HOOK. ADD ONE 6'-0" LONG BAR OF SIZE TO MATCH FOOTING REINFORCING. DO NOT APPLY THIS DETAIL AT COLUMN FOOTINGS.

③ TYPICAL EXTERIOR/INTERIOR LOAD BEARING MASONRY WALL DETAIL
3/4" = 1'-0"

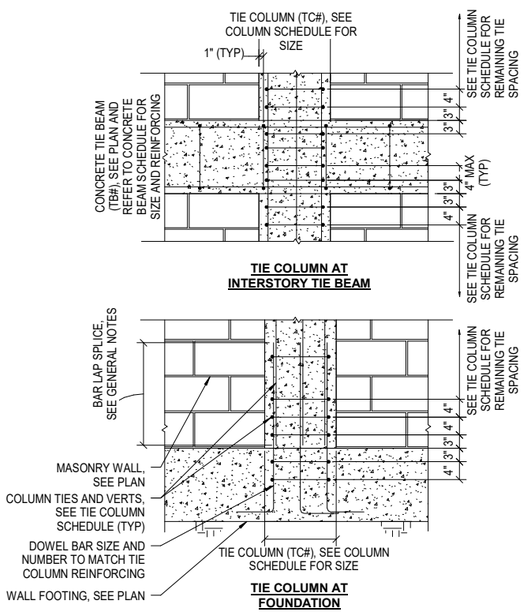

NOTE:

1. EXTEND ALL TIE COLUMNS TO TOP-MOST WALL ELEVATION AND TERMINATE VERTICAL BARS WITH STANDARD HOOKS

④ TYPICAL CONCRETE TIE COLUMN (TC#)
3/4" = 1'-0"

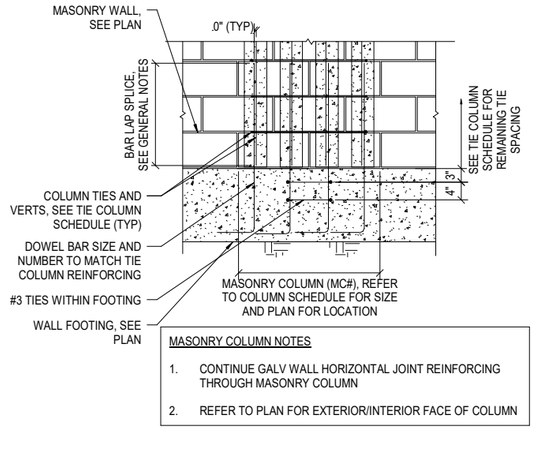

MASONRY COLUMN NOTES

1. CONTINUE GALV WALL HORIZONTAL JOINT REINFORCING THROUGH MASONRY COLUMN
2. REFER TO PLAN FOR EXTERIOR/INTERIOR FACE OF COLUMN

⑤ TYPICAL MASONRY COLUMN (MC#)
3/4" = 1'-0"

FOR PERMIT & BIDDING ONLY

AVCON
TRANSFORMING TODAYS IDEAS INTO TOMORROW'S REALITY
Michael Baker INTERNATIONAL
4211 W. BOY SCOUT BLVD
SUITE 500
TAMPA, FL 33607
FLORIDA LICENSE # AA 26002484
JEFFREY YEAGER, P.E.
FL LICENSE NO.: 62853

NO.	DATE	REVISION	BY

MASONRY DETAILS

100% BID DRAWINGS

AIRPORT TERMINAL AND HANGAR DEVELOPMENT

PREPARED FOR

DEFUNIAK SPRINGS MUNICIPAL AIRPORT

DESIGNED BY:	AJM
DRAWN BY:	AJM
CHECKED BY:	JY
APPROVED BY:	JY
PROJECT NO:	2019.028.01
DATE:	11/1/2021

SHEET NUMBER

S4.01

THIS DOCUMENT CONTAINS PRIVILEGED AND PROPRIETARY INFORMATION, ALL OF WHICH IS EXPRESSLY PROVIDED BY AVCON, INC., FOR USE BY THE INTENDED RECIPIENT, AND FOR A SPECIFIC PURPOSE. WITHOUT THE EXPRESS WRITTEN CONSENT OF AVCON, INC. ANY DISTRIBUTION, REPRODUCTION, OR OTHER USE OF THIS DOCUMENT, IN WHOLE OR IN PART, IS STRICTLY PROHIBITED.

MASONRY LINTEL SCHEDULE

MARK	LENGTH (L)	CAST-CRETE MARK
MB1	> 2'-10" TO 5"-10"	8F16-1B/OT PRECAST
MB2	> 5'-10" TO 14'-0"	8F16-1B/1T PRECAST
MB3	> 14'-0" TO 21'-4"	8F16-1B/2T PRESTRESSED

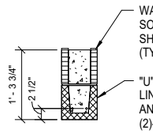

MB-1 (PRECAST)

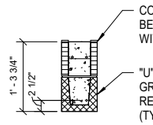

MB-2 (PRECAST WITH BOND BEAM)

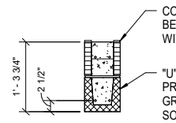

MB-3 (PRECAST PRESTRESSED WITH BOND BEAM)

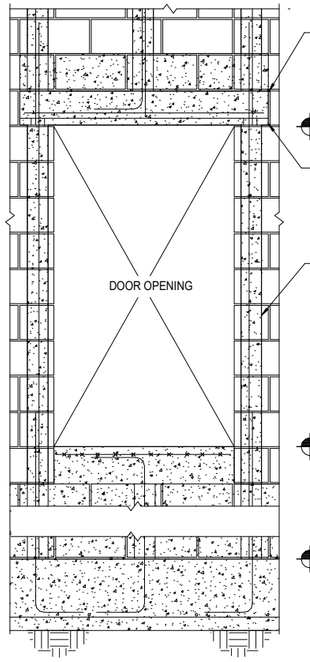

DOOR OPENING ELEVATION

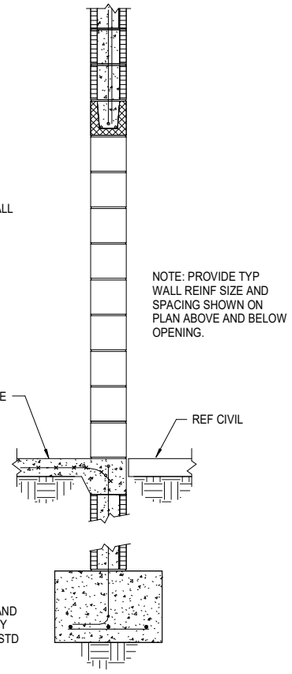

DOOR OPENING SECTION

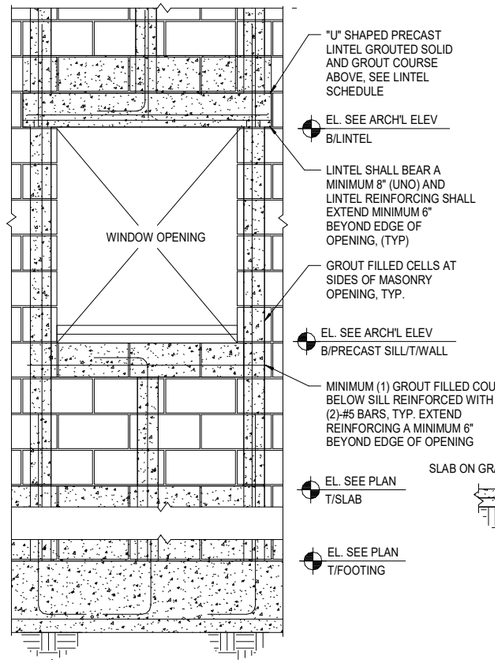

WINDOW OPENING ELEVATION

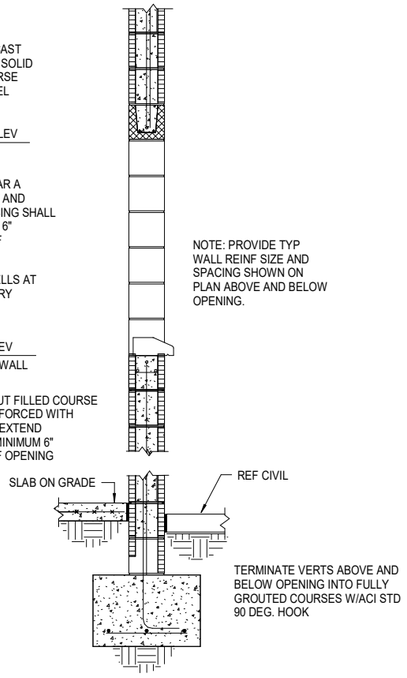

WINDOW OPENING SECTION

MASONRY LINTEL NOTES:

1. MASONRY LINTEL SUBSTITUTIONS MUST BE APPROVED BY THE ENGINEER OF RECORD PRIOR TO SECURING MATERIALS.
2. SHORE PRECAST "U" LINTELS PER MANUFACTURER'S RECOMMENDATIONS.
3. REFER TO TYPICAL EXTERIOR LOAD BEARING MASONRY WALL DETAIL AND TYPICAL EXTERIOR LOAD BEARING MASONRY WALL AT DOOR FOR MORE INFORMATION.

① TYPICAL MASONRY LINTELS AT OPENINGS
3/4" = 1'-0"

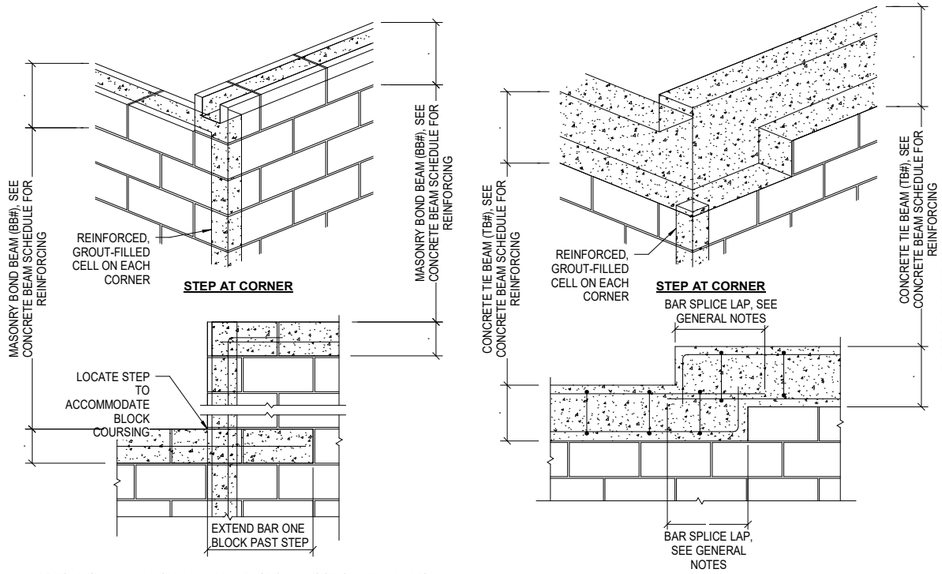

② TYPICAL STEPPED BOND BEAM AND SLOPED CONCRETE BEAMS
3/4" = 1'-0"

NOTES:

1. EXTEND ALL WALL VERTICAL BARS TO TOP-MOST COURSE AND TERMINATE WITH STANDARD HOOKS.
2. STEP MASONRY WALL AND PROVIDE MINIMUM BEAM DEPTH AND REINFORCING AT ALL SLOPED TIE BEAMS AS SHOWN ON THIS DETAIL.

FOR PERMIT & BIDDING ONLY

AVCON
TRANSFORMING TODAYS IDEAS INTO TOMORROW'S REALITY
Michael Baker INTERNATIONAL
4211 W. BOY SCOUT BLVD
SUITE 500
TAMPA, FL 33607
FLORIDA LICENSE # AA 26002484
JEFFREY YEAGER, P.E.
FL LICENSE NO.: 62853

NO.	DATE	REVISION	BY

MASONRY DETAILS

100% BID DRAWINGS

AIRPORT TERMINAL AND HANGAR DEVELOPMENT

PREPARED FOR
DEFUNIAK SPRINGS MUNICIPAL AIRPORT

DESIGNED BY:	AJM
DRAWN BY:	AJM
CHECKED BY:	JY
APPROVED BY:	JY
PROJECT NO:	2019.028.01
DATE:	11/1/2021

SHEET NUMBER
S4.02

THIS DOCUMENT CONTAINS PRIVILEGED AND PROPRIETARY INFORMATION, ALL OF WHICH IS EXPRESSLY PROVIDED BY AVCON, INC., FOR USE BY THE INTENDED RECIPIENT, AND FOR A SPECIFIC PURPOSE, WITHOUT THE EXPRESS WRITTEN CONSENT OF AVCON, INC. ANY DISTRIBUTION, REPRODUCTION, OR OTHER USE OF THIS DOCUMENT, IN WHOLE OR IN PART, IS STRICTLY PROHIBITED.

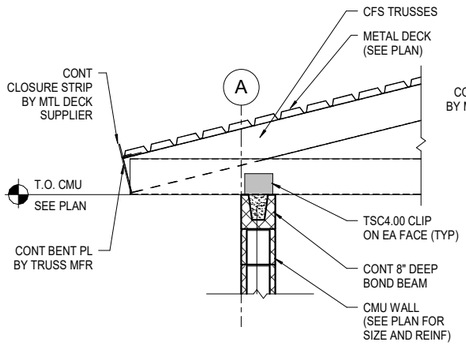

1 ROOF SECTION AT CF TRUSS
3/4" = 1'-0"

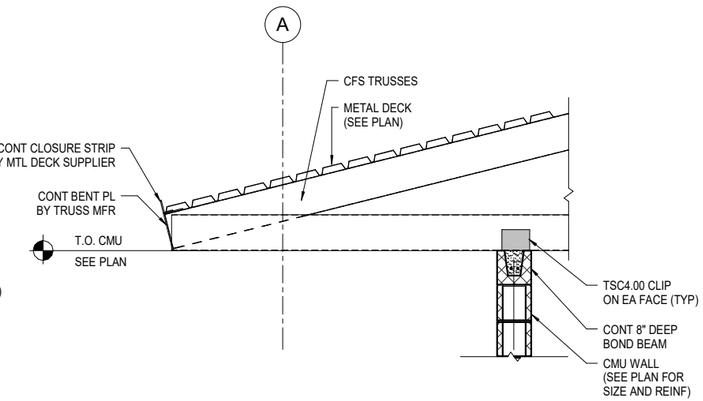

2 ROOF SECTION AT DOOR
3/4" = 1'-0"

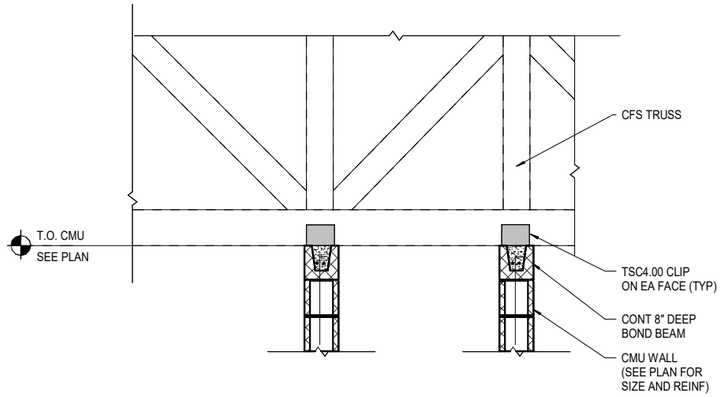

3 ROOF TRUSS AT DOUBLE WALL
3/4" = 1'-0"

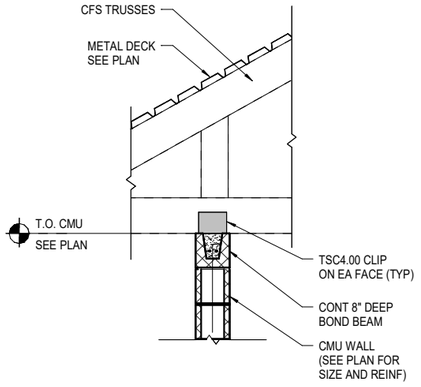

4 TRUSS AT INTERIOR WALL
3/4" = 1'-0"

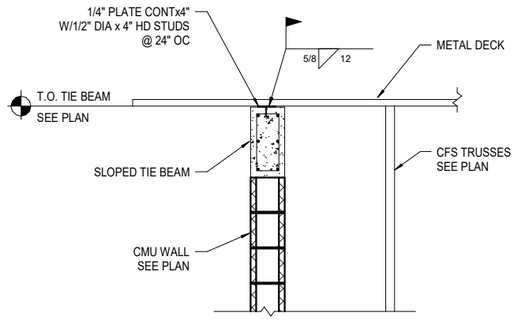

5 ROOF SECTION
3/4" = 1'-0"

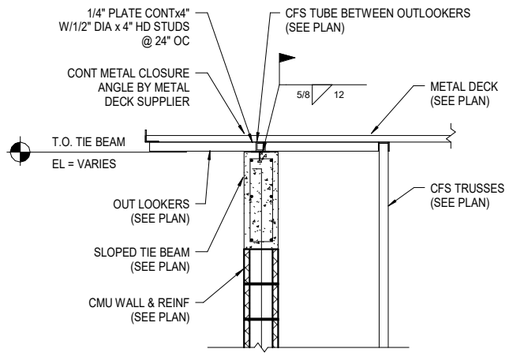

6 LOW ROOF SECTION
3/4" = 1'-0"

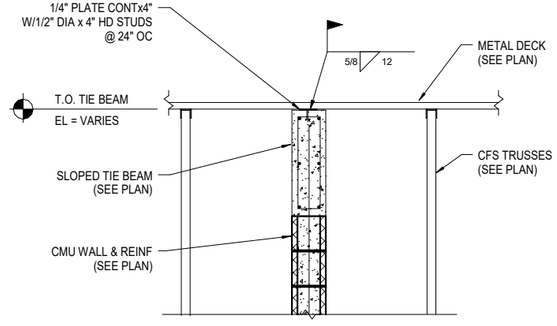

7 LOW ROOF INTERIOR SECTION
3/4" = 1'-0"

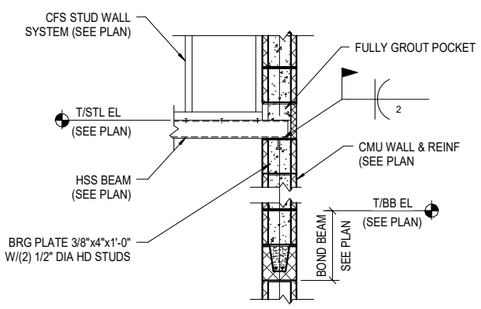

8 TUBE TO MASONRY WALL DETAIL
3/4" = 1'-0"

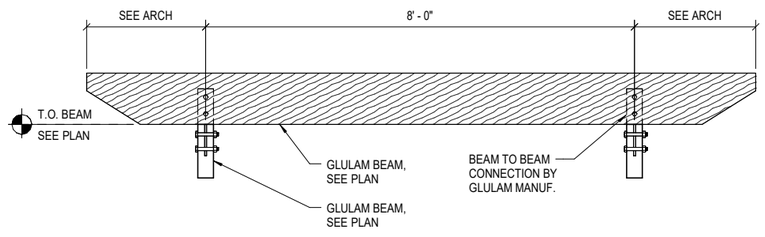

9 SECTION THRU FLAT CANOPY
3/4" = 1'-0"

FOR PERMIT & BIDDING ONLY

AVCON
TRANSFORMING TODAYS IDEAS INTO TOMORROW'S REALITY
Michael Baker INTERNATIONAL
4211 W. BOY SCOUT BLVD
SUITE 500
TAMPA, FL 33607
FLORIDA LICENSE # AA 26002484
JEFFREY YEAGER, P.E.
FL LICENSE NO.: 62853

NO	DATE	REVISION	BY

ROOF DETAILS

100% BID DRAWINGS

AIRPORT TERMINAL AND HANGAR DEVELOPMENT

PREPARED FOR
DEFUNIAK SPRINGS MUNICIPAL AIRPORT

DESIGNED BY:	AJM
DRAWN BY:	AJM
CHECKED BY:	JY
APPROVED BY:	JY
PROJECT NO:	2019.028.01
DATE:	11/1/2021

SHEET NUMBER
S5.01

THIS DOCUMENT CONTAINS PRIVILEGED AND PROPRIETARY INFORMATION, ALL OF WHICH IS EXPRESSLY PROVIDED BY AVCON, INC., FOR USE BY THE INTENDED RECIPIENT, AND FOR A SPECIFIC PURPOSE. WITHOUT THE E XPRESS WRITTEN CONSENT OF AVCON, INC. ANY DISTRIBUTION, REPRODUCTION, OR OTHER USE OF THIS DOCUMENT, IN WHOLE OR IN PART, IS STRICTLY PROHIBITED.

ATTACHMENT A

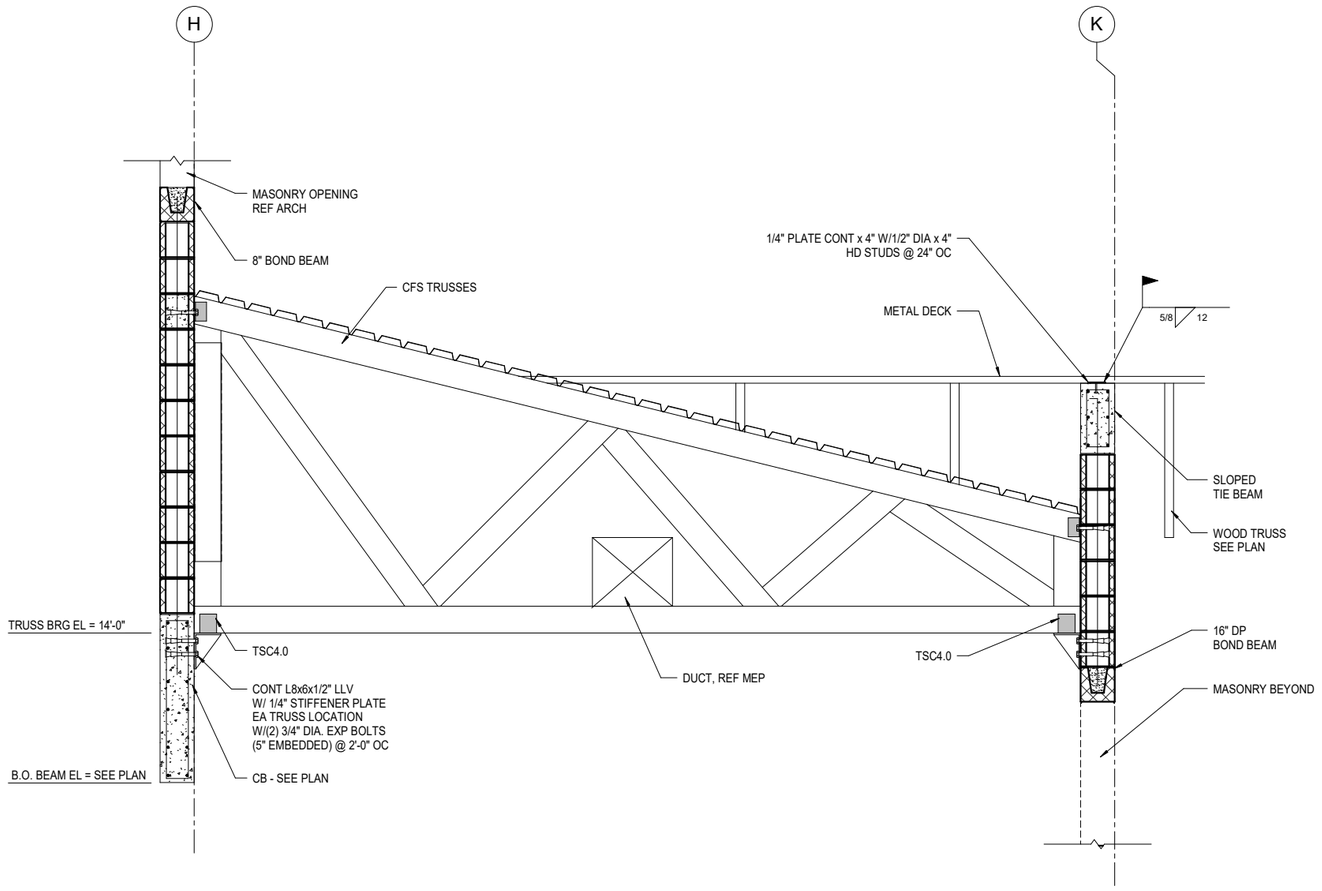

1 TRUSS THRU CANOPY DETAIL
3/4" = 1'-0"

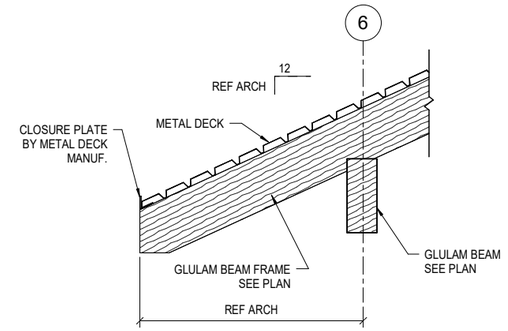

2 DETAIL THRU LANDSIDE CANOPY
3/4" = 1'-0"

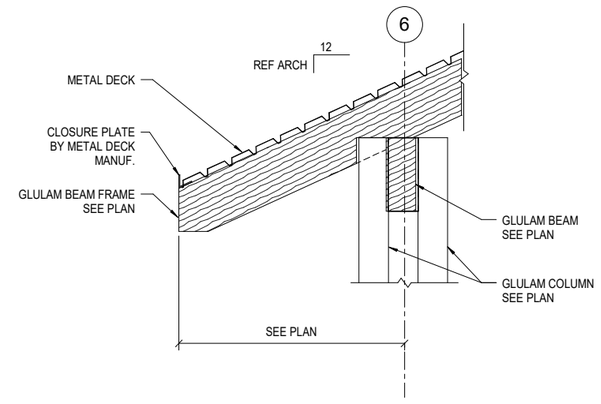

3 DETAIL THRU LANDSIDE CANOPY COLUMN
3/4" = 1'-0"

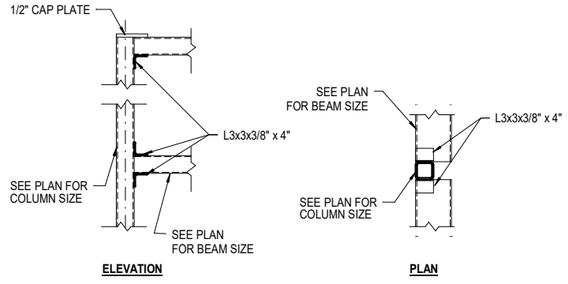

4 BEAM TO COLUMN DETAIL
3/4" = 1'-0"

FOR PERMIT & BIDDING ONLY

AVCON
TRANSFORMING TODAYS IDEAS INTO TOMORROW'S REALITY

Michael Baker INTERNATIONAL
4211 W. BOY SCOUT BLVD
SUITE 500
TAMPA, FL 33607
FLORIDA LICENSE # AA 26002484

JEFFREY YEAGER, P.E.
FL LICENSE NO.: 62853

NO.	DATE	REVISION	BY

ROOF DETAILS

100% BID DRAWINGS

AIRPORT TERMINAL AND HANGAR DEVELOPMENT

PREPARED FOR
DEFUNIAK SPRINGS MUNICIPAL AIRPORT

DESIGNED BY:	AJM
DRAWN BY:	AJM
CHECKED BY:	JY
APPROVED BY:	JY
PROJECT NO:	2019.028.01
DATE:	11/1/2021

SHEET NUMBER

S5.02

THIS DOCUMENT CONTAINS PRIVILEGED AND PROPRIETARY INFORMATION, ALL OF WHICH IS EXPRESSLY PROVIDED BY AVCON, INC., FOR USE BY THE INTENDED RECIPIENT, AND FOR A SPECIFIC PURPOSE. WITHOUT THE EXPRESS WRITTEN CONSENT OF AVCON, INC. ANY DISTRIBUTION, REPRODUCTION, OR OTHER USE OF THIS DOCUMENT, IN WHOLE OR IN PART, IS STRICTLY PROHIBITED.

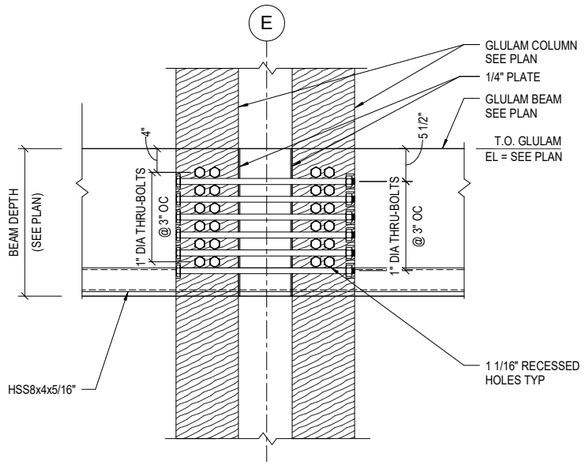

1 INTERMEDIATE BEAM (4 POST CONNX)
1" = 1'-0"

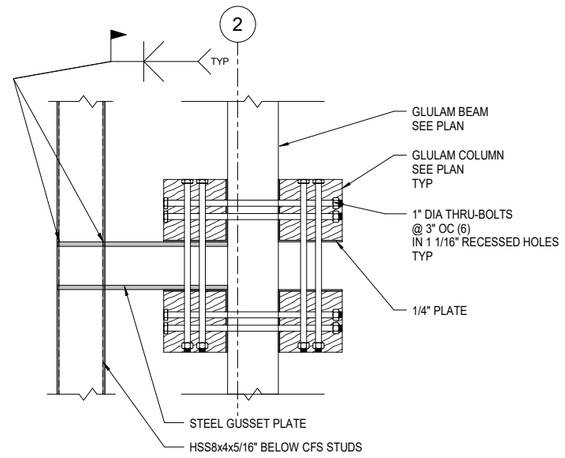

2 INTERMEDIATE BEAM PLAN VIEW (4 POST CONNX)
1" = 1'-0"

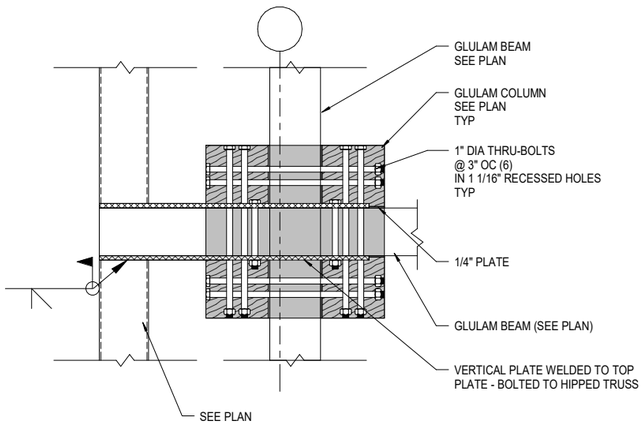

3 TOP BEAM PLAN (4 POST CONNX)
1" = 1'-0"

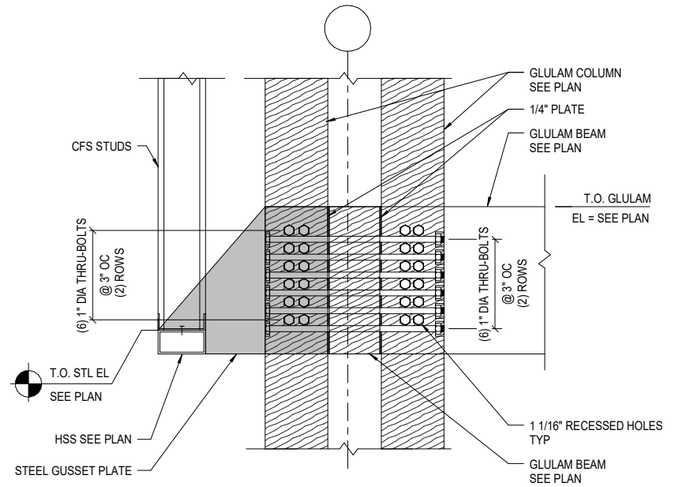

4 INTERMEDIATE BEAM (4 POST CONNX) AT CFS WALL
1" = 1'-0"

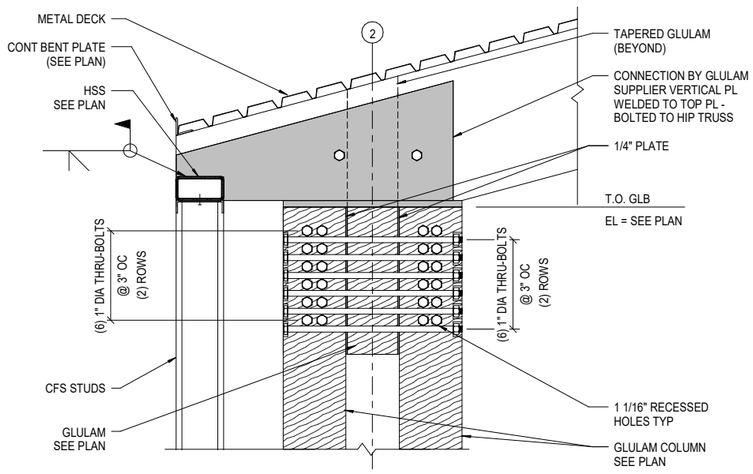

5 TOP BEAM (4 POST CONNX) AT CFS WALL
1" = 1'-0"

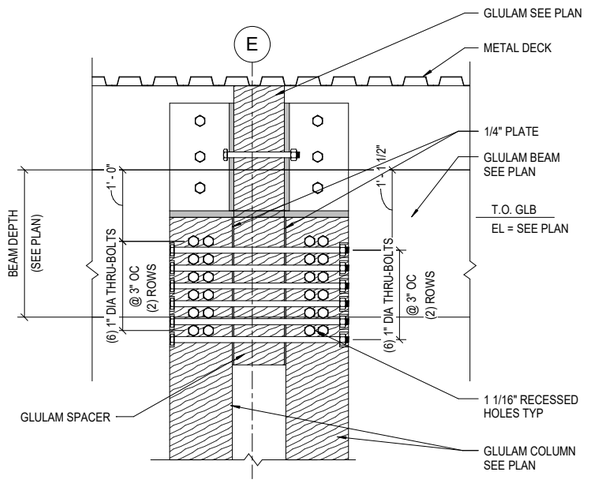

6 TOP BEAM (4 POST CONNX)
1" = 1'-0"

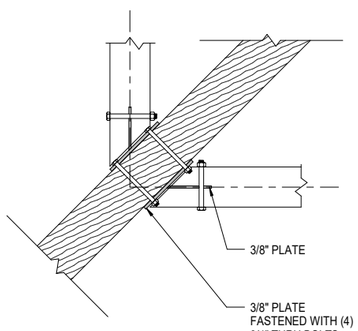

7 INTERMEDIATE BEAM CONNECTION
1" = 1'-0"

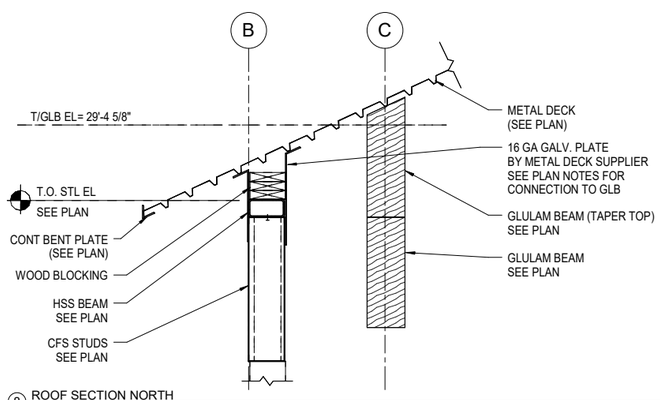

8 ROOF SECTION NORTH
3/4" = 1'-0"

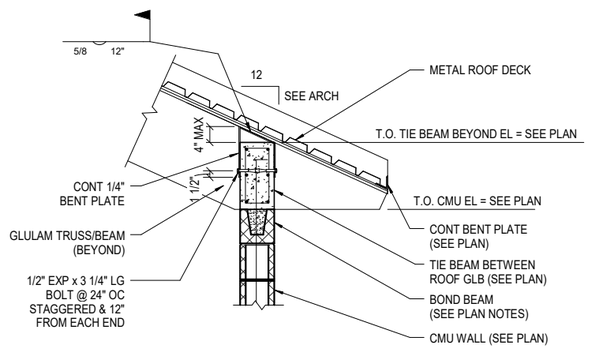

9 DETAIL THRU LOBBY - HIGH ROOF
3/4" = 1'-0"

FOR PERMIT & BIDDING ONLY

AVCON
TRANSFORMING TODAYS IDEAS INTO TOMORROW'S REALITY
Michael Baker INTERNATIONAL
4211 W. BOY SCOUT BLVD
SUITE 500
TAMPA, FL 33607
FLORIDA LICENSE # AA 26002484
JEFFREY YEAGER, P.E.
FL LICENSE NO.: 62853

NO.	DATE	REVISION	BY

ROOF DETAILS

100% BID DRAWINGS

AIRPORT TERMINAL AND HANGAR DEVELOPMENT

PREPARED FOR
DEFUNIAK SPRINGS MUNICIPAL AIRPORT

DESIGNED BY:	AJM
DRAWN BY:	AJM
CHECKED BY:	JY
APPROVED BY:	JY
PROJECT NO:	2019.028.01
DATE:	11/1/2021

SHEET NUMBER
S5.03

THIS DOCUMENT CONTAINS PRIVILEGED AND PROPRIETARY INFORMATION, ALL OF WHICH IS EXPRESSLY PROVIDED BY AVCON, INC., FOR USE BY THE INTENDED RECIPIENT, AND FOR A SPECIFIC PURPOSE WITHOUT THE EXPRESS WRITTEN CONSENT OF AVCON, INC. ANY DISTRIBUTION, REPRODUCTION, OR OTHER USE OF THIS DOCUMENT, IN WHOLE OR IN PART, IS STRICTLY PROHIBITED.

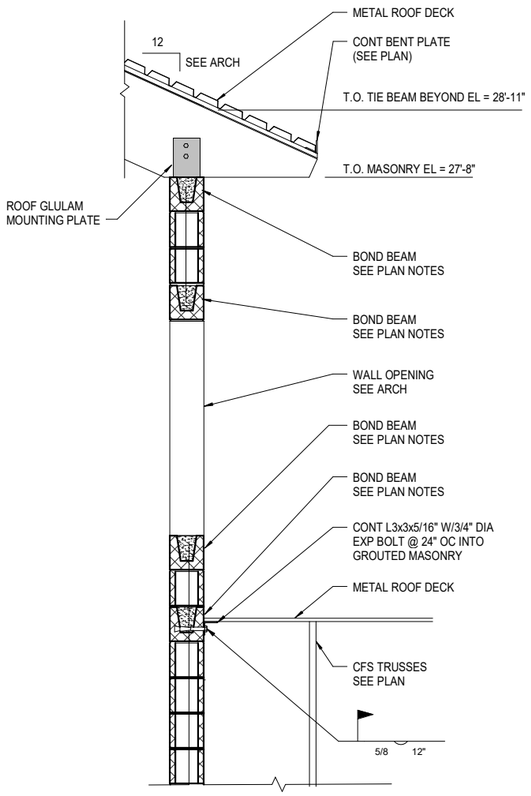

1 DETAIL THRU LOBBY
3/4" = 1'-0"

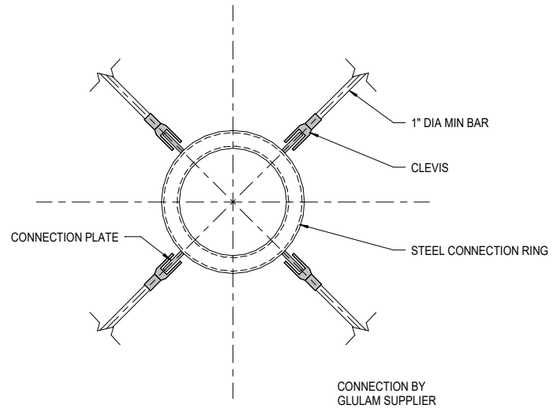

2 GLT "A" BOTTOM CHORD CONNECTION
1 1/2" = 1'-0"

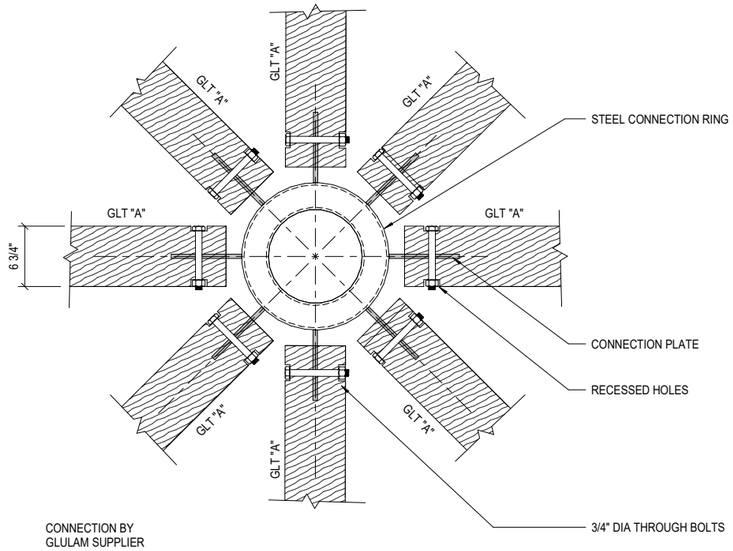

3 GLT "A" TOP CHORD AND GLB CONNECTION
1 1/2" = 1'-0"

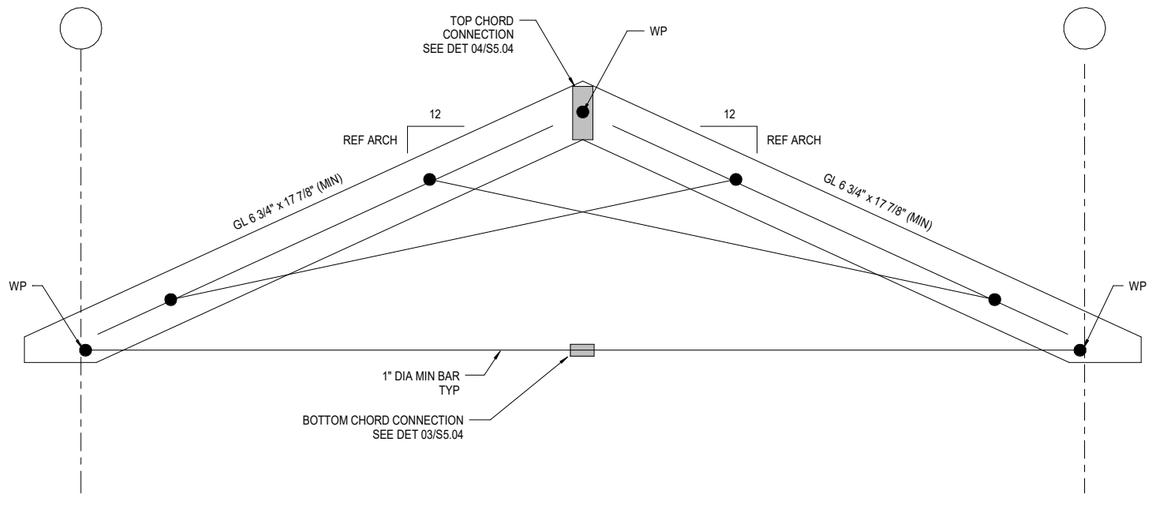

4 GLT "A" PROFILE
1/2" = 1'-0"

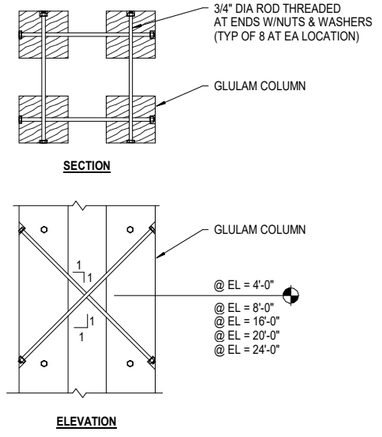

5 COLUMN LACING DETAIL
3/4" = 1'-0"

FOR PERMIT & BIDDING ONLY

AVCON
TRANSFORMING TODAYS IDEAS INTO TOMORROW'S REALITY
Michael Baker INTERNATIONAL
4211 W. BOY SCOUT BLVD
SUITE 500
TAMPA, FL 33607
FLORIDA LICENSE # AA 26002484
JEFFREY YEAGER, P.E.
FL LICENSE NO.: 62853

NO.	DATE	REVISION	BY

ROOF DETAILS

100% BID DRAWINGS

AIRPORT TERMINAL AND HANGAR DEVELOPMENT

PREPARED FOR
DEFUNIAK SPRINGS MUNICIPAL AIRPORT

DESIGNED BY:	AJM
DRAWN BY:	AJM
CHECKED BY:	JW
APPROVED BY:	JW
PROJECT NO:	2019.028.01
DATE:	11/1/2021

SHEET NUMBER
S5.04

THIS DOCUMENT CONTAINS PRIVILEGED AND PROPRIETARY INFORMATION, ALL OF WHICH IS EXPRESSLY PROVIDED BY AVCON, INC., FOR USE BY THE INTENDED RECIPIENT, AND FOR A SPECIFIC PURPOSE. WITHOUT THE E EXPRESS WRITTEN CONSENT OF AVCON, INC. ANY DISTRIBUTION, REPRODUCTION, OR OTHER USE OF THIS DOCUMENT, IN WHOLE OR IN PART, IS S TRICTLY PROHIBITED.

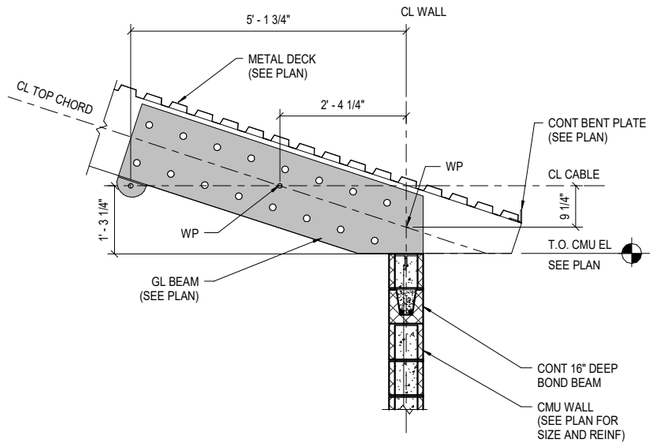

1 TRUSS CONNECTION DETAIL ON CMU
3/4" = 1'-0"

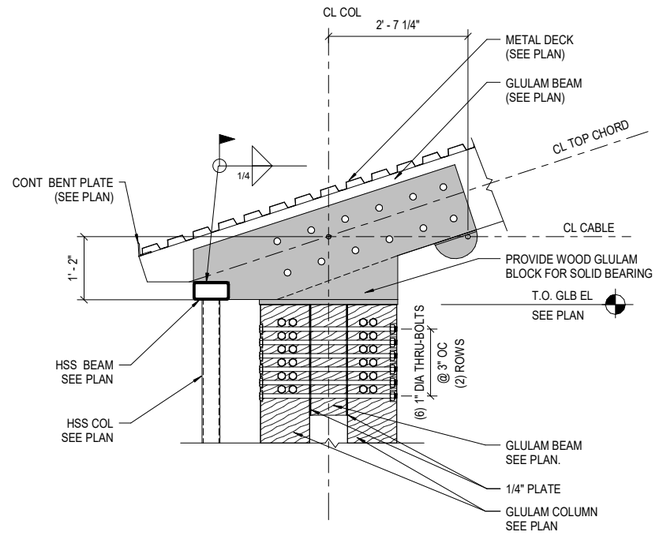

2 TRUSS CONNECTION DETAIL ON GLC
3/4" = 1'-0"

FOR PERMIT & BIDDING ONLY

AVCON
TRANSFORMING TODAYS IDEAS
INTO TOMORROW'S REALITY

Michael Baker
INTERNATIONAL
4211 W. BOY SCOUT BLVD
SUITE 500
TAMPA, FL 33607
FLORIDA LICENSE # AA 26002484

JEFFREY YEAGER, P.E.
FL LICENSE NO.: 62853

NO.	DATE	REVISION	BY

TRUSS DETAILS AT ROD CONNX

100% BID DRAWINGS

AIRPORT TERMINAL AND HANGAR DEVELOPMENT

PREPARED FOR
DEFUNIAK SPRINGS MUNICIPAL AIRPORT

DESIGNED BY:	AJM
DRAWN BY:	AJM
CHECKED BY:	JY
APPROVED BY:	JY
PROJECT NO:	2019.028.01
DATE:	11/1/2021

SHEET NUMBER

S5.05

THIS DOCUMENT CONTAINS PRIVILEGED AND PROPRIETARY INFORMATION, ALL OF WHICH IS EXPRESSLY PROVIDED BY AVCON, INC., FOR USE BY THE INTENDED RECIPIENT, AND FOR A SPECIFIC PURPOSE WITHOUT THE E EXPRESS WRITTEN CONSENT OF AVCON, INC. ANY DISTRIBUTION, REPRODUCTION, OR OTHER USE OF THIS DOCUMENT, IN WHOLE OR IN PART, IS S TRICTLY PROHIBITED.

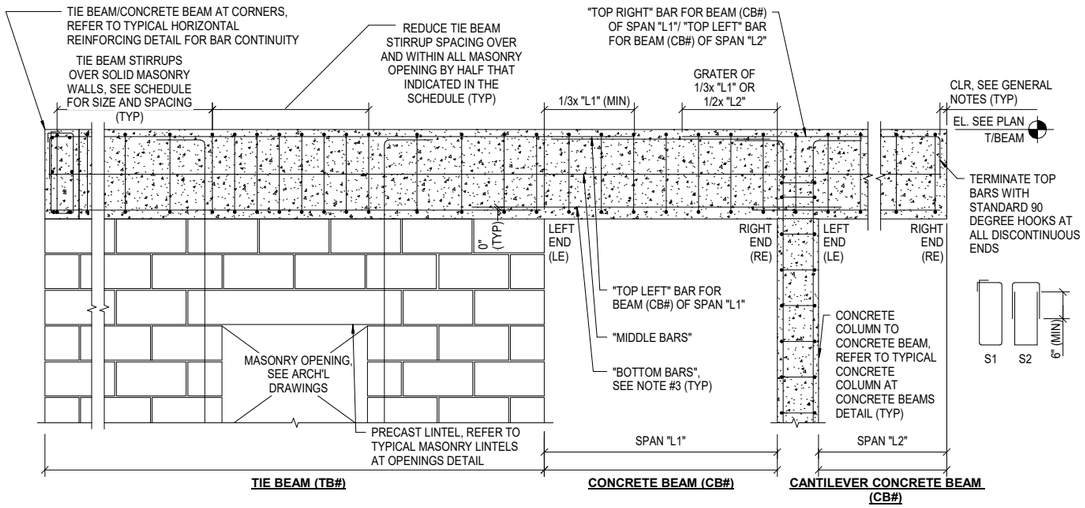

1 SCHEDULE - BOND BEAM/CONCRETE BEAM/TIE BEAM
3/4" = 1'-0"

BOND BEAM/CONCRETE BEAM/TIE BEAM SCHEDULE

BEAM MARK	SIZE		REINFORCEMENT				STIRRUPS			REMARKS
	WIDTH	DEPTH	TOP LEFT	TOP RIGHT	BOTTOM	MIDDLE	SIZE	TYPE	SPACING (FROM FACE OF EACH SUPPORT/BALANCE)	
BB1	8"	16"	N/A	N/A	(2)-#5	N/A	N/A	N/A	N/A	
CB1	8"	24"	(2)-#7	(2)-#7	(2)-#7	#7 EF	#3	S1	8" OC (MAX)	
TB1	8"	16"	(2)-#5	(2)-#5	(2)-#5	N/A	#3	S1	12" OC (MAX)	
TB2	8"	24"	(2)-#5	(2)-#5	(2)-#5	#5 EF	#3	S1	12" OC (MAX)	
TB3	12"	16"	(2)-#8	(2)-#8	(2)-#8	N/A	#3	S1	12" OC (MAX)	
TB4	8"	15"	(2)-#8	(2)-#8	(2)-#8	N/A	#3	S1	12" OC (MAX)	

BEAM SCHEDULE NOTES

1. TO DETERMINE LEFT AND RIGHT ENDS OF BEAM MEMBERS, ORIENT PLAN WITH SAME SITE BEARING. LEFT AND RIGHT ENDS OF BEAM IN THE FIELD ARE DEFINED BY THE LEFT AND RIGHT END OF THE BEAM MARK ON PLAN WHEN THE BEAM MARK IS READ IN THE NORMAL LEFT TO RIGHT CONVENTION. (SEE EXAMPLE)
2. REINFORCING SHOP DRAWINGS SHALL SHOW BEAM DIAGRAM WITH NOTE #1 AND SHALL INDICATE LEFT END (LE) AND RIGHT END (RE) IN THE BEAM ERECTION PLAN AND REINFORCING SCHEDULE.
3. EXTEND ALL "BOTTOMS BARS" PAST THE OTHER SIDE OF COLUMN/VERTICAL SUPPORTS. LAP SPLICES OF "TOP LEFT" AND "TOP RIGHT" WITHIN 1/4xBEAM SPAN L# FROM A COLUMN/VERTICAL SUPPORT IS PROHIBITED. LAP SPLICES OF "BOTTOM BARS" WITHIN THE MIDDLE HALF OF A BEAM SPAN IS PROHIBITED.
4. BEAM WIDTH AND DEPTHS SHOWN ARE NOMINAL DIMENSIONS. PROVIDE ACTUAL DIMENSIONS TO FIT MASONRY WIDTH AND COURSING. BEAM DEPTHS SHALL BE THE MINIMUM REQUIRED TO MEET THE DESIGN INTENT. BEAM DEPTHS SHALL BE INCREASED BEYOND THE MINIMUM DEPTH SHOWN TO ACCOMMODATE MASONRY COURSING AND EMBEDDED PLATE CONNECTIONS, AS FAR AS IT DOES NOT CONFLICT OR INTERRUPT OTHER STRUCTURAL OR ARCHITECTURAL ELEMENTS OF THE WALL.

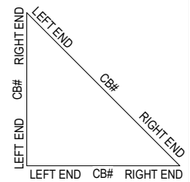

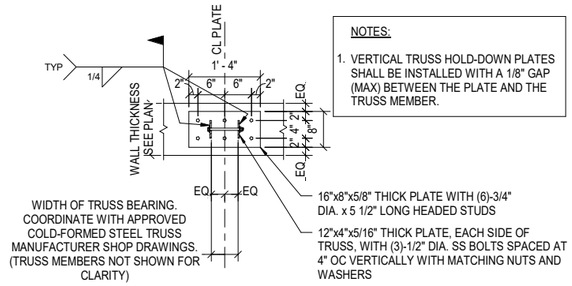

NOTES:

1. VERTICAL TRUSS HOLD-DOWN PLATES SHALL BE INSTALLED WITH A 1/8" GAP (MAX) BETWEEN THE PLATE AND THE TRUSS MEMBER.

2 TRUSS HOLD-DOWN (H4)
3/4" = 1'-0"

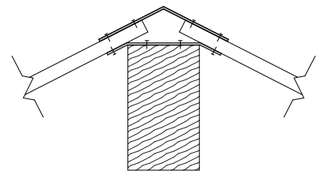

DECK BEARING MATERIAL ON HIP OR RIDGE

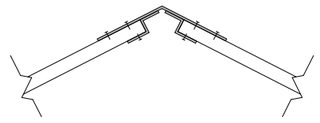

SPANNING A RIDGE OR HIP

3 DECK BEARING DETAIL
1 1/2" = 1'-0"

TRUSS HOLD-DOWN CONNECTOR SCHEDULE

CONNECTOR MARK	MODEL NO.	FASTENERS	ANCHORAGE	ALLOWABLE UPLIFT LOAD (LB)
H1	HHETA16	(10) #10 SS METAL SCREWS	N/A	2235
	6"x4"X3" LONG GALV 14 GA CLIP	(6) #14 SS METAL SCREWS	(2) 5/16" DIA. CONCRETE SCREWS	N/A
H2	(1)-S/VGT2.5	(16) #14 SS METAL SCREWS	(1)-5/8" DIA A307 (GALV) W/ 8" EMBED	3050
	14 GA MIN STIFFENER PLATE PER TRUSS MFR	1/8" WELD	N/A	N/A
	6"x4"X3" LONG GALV 14 GA CLIP	(6) #14 SS METAL SCREWS	(2) 5/16" DIA. CONCRETE SCREWS	N/A
H3	(2)-S/VGT2.5	(32) #14 SS METAL SCREWS	(2)-5/8" DIA A307 (GALV) W/ 8" EMBED	6100
H4	SEE DETAIL 2 / S5.06			9000
H5	GALV 14 GA CLIP	(8) #14 SS METAL SCREWS	3/8" DIA A307 x 5" EMBED, SS ADHESIVE THREADED RODS	1800
H6	10"x4"X3" LONG GALV 14 GA CLIP	(16) #14 SS METAL SCREWS	SEE DETAIL	7200
H7	6"x4"X3" LONG GALV 14 GA CLIP	(8) #14 SS METAL SCREWS	SEE DETAIL	2000

NOTES:

1. ALL "SIMPSON COMPANY" HANGERS, ETC. (OR APPROVED EQUAL) SHALL BE INSTALLED AS RECOMMENDED BY THE MANUFACTURER'S REQUIREMENTS.
2. EMBEDDED ANCHOR BOLTS SHALL BE STRAIGHT, THREADED RODS WITH A PLATED END AS SHOWN IN THE "TYPICAL ANCHOR BOLT DETAIL".

COLUMN SCHEDULE

COLUMN MARK	VERTS	TIES	
CC1	(6) #6	#4 @ 10"	
CC2	(10) #7	#4 @ 10"	
TC1	(9) #5	#3 @ 8"	
TC2	(10) #5	#3 @ 8"	

COLUMN SCHEDULE NOTES

1. REFER TO PLAN FOR COLUMN ORIENTATION.
2. FOR COLUMNS OF UNCOMMON SHAPE AND PLAN ORIENTATION, REFER TO THE COLUMN DETAILS BELOW.
3. REFER TO CONCRETE COLUMN, MASONRY TIE COLUMN, MASONRY COLUMN DETAILS FOR MORE INFORMATION.

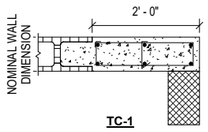

TC-1

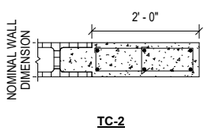

TC-2

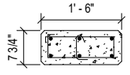

CC1

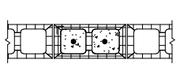

MC1

4 COLUMN SCHEDULE
3/4" = 1'-0"

FOUNDATION SCHEDULE

FOOTING MARK	SIZE		REINFORCEMENT
	T	W x L	
TDS1.33	16"	1'-4" x CONT	CONT (2)-#5 BOTTOM
WF2.0	16"	2'-0" x CONT	CONT (3)-#5 BOTTOM, #5 @ 18" OC TRANSVERSE, BOTTOM
WF2.5	16"	2'-6" x CONT	CONT (3)-#5 BOTTOM, #5 @ 18" OC TRANSVERSE, BOTTOM
WF3.0	16"	3'-0" x CONT	CONT (4)-#5 BOTTOM, #5 @ 18" OC TRANSVERSE, BOTTOM
WF4.0	16"	4'-0" x CONT	CONT (5)-#5 TOP & BOTTOM, #5 @ 18" TRANSVERSE, BOTTOM
F5.0	24"	5'-0" x 5'-0"	(6)-#6 BOTTOM, EACH WAY
F6.0	24"	6'-0" x 6'-0"	(7)-#5 BOTTOM, EACH WAY
F6.5	24"	6'-6" x 6'-6"	(8)-#5 BOTTOM, EACH WAY
F9.0	24"	9'-0" x 9'-0"	(11)-#6 BOTTOM, EACH WAY
F12.0	24"	12'-0" x 12'-0"	(21)-#5 BOTTOM, EACH WAY
F13.5	24"	13'-6" x 13'-6"	(16)-#6 BOTTOM, EACH WAY
F14.5	24"	14'-6" x 14'-6"	(13)-#7 BOTTOM, EACH WAY
TSF1.33	16"	1'-4" x CONT	CONT (2)-#5 BOTTOM, #5 @ 18" OC TRANSVERSE, BOTTOM

5 FOUNDATION SCHEDULE
3/4" = 1'-0"

FOR PERMIT & BIDDING ONLY

AVCON
TRANSFORMING TODAYS IDEAS INTO TOMORROW'S REALITY
Michael Baker INTERNATIONAL
4211 W. BOY SCOUT BLVD
SUITE 500
TAMPA, FL 33607
FLORIDA LICENSE # AA 26002484
JEFFREY YEAGER, P.E.
FL LICENSE NO.: 62853

NO.	DATE	REVISION	BY

SCHEDULES

100% BID DRAWINGS

AIRPORT TERMINAL AND HANGAR DEVELOPMENT

PREPARED FOR

DEFUNIAK SPRINGS MUNICIPAL AIRPORT

DESIGNED BY:	AJM
DRAWN BY:	AJM
CHECKED BY:	JY
APPROVED BY:	JY
PROJECT NO:	2019.028.01
DATE:	11/1/2021

SHEET NUMBER

S5.06

THIS DOCUMENT CONTAINS PRIVILEGED AND PROPRIETARY INFORMATION, ALL OF WHICH IS EXPRESSLY PROVIDED BY AVCON, INC., FOR USE BY THE INTENDED RECIPIENT, AND FOR A SPECIFIC PURPOSE, WITHOUT THE E EXPRESS WRITTEN CONSENT OF AVCON, INC. ANY DISTRIBUTION, REPRODUCTION, OR OTHER USE OF THIS DOCUMENT, IN WHOLE OR IN PART, IS STRICTLY PROHIBITED.

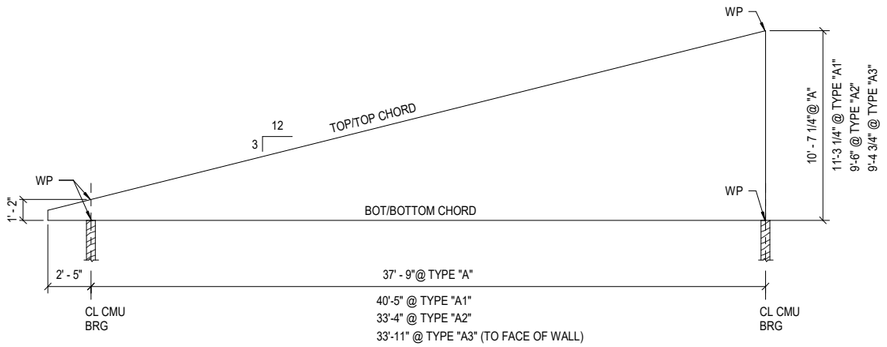

TRUSS PROFILES TYPE "A", "A1", "A2", "A3"

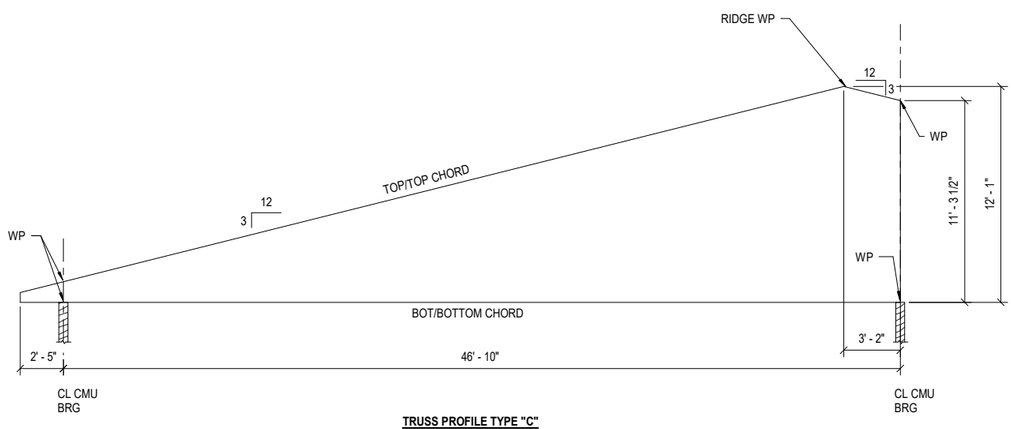

TRUSS PROFILE TYPE "C"

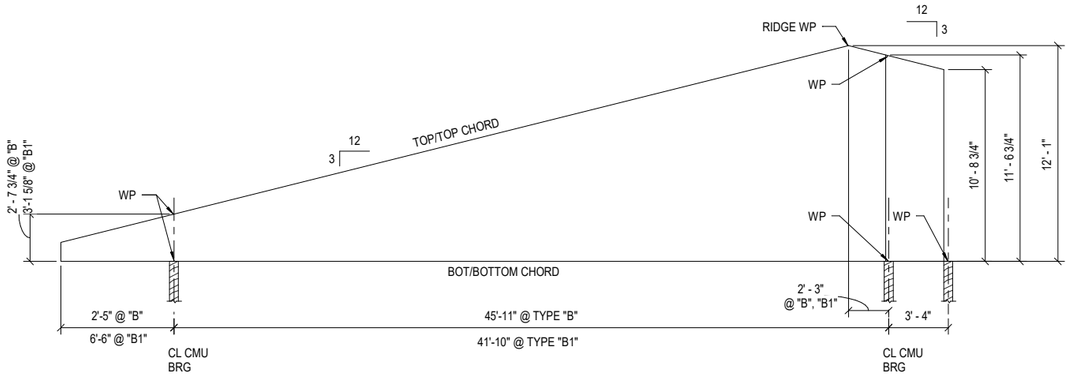

TRUSS PROFILES TYPE "B", "B1"

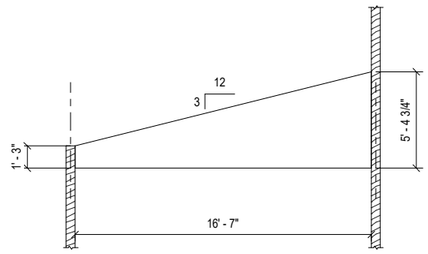

TRUSS PROFILE TYPE "D"

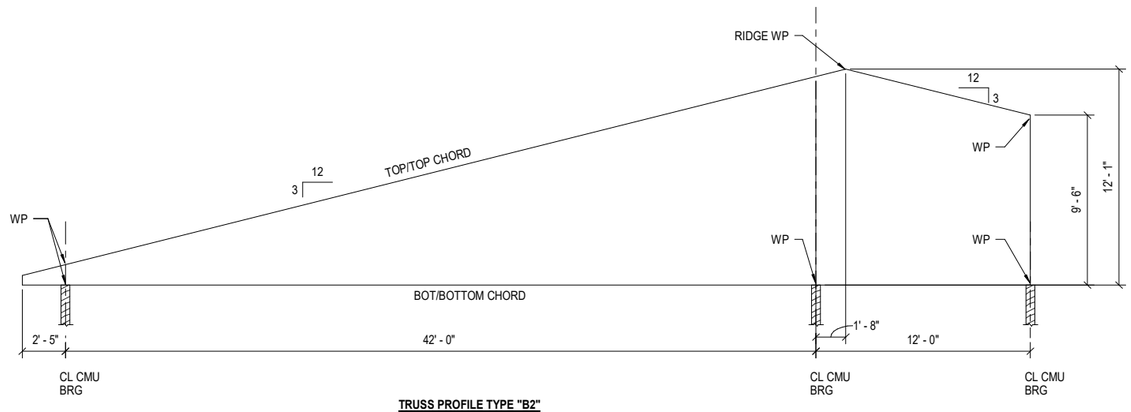

TRUSS PROFILE TYPE "B2"

1 TRUSS PROFILES
1/4" = 1'-0"

FOR PERMIT & BIDDING ONLY

AVCON
TRANSFORMING TODAYS IDEAS INTO TOMORROW'S REALITY

Michael Baker INTERNATIONAL
4211 W. BOY SCOUT BLVD
SUITE 500
TAMPA, FL 33607
FLORIDA LICENSE # AA 26002484

JEFFREY YEAGER, P.E.
FL LICENSE NO.: 62853

NO.	DATE	REVISION	BY

TRUSS PROFILES

100% BID DRAWINGS

AIRPORT TERMINAL AND HANGAR DEVELOPMENT

PREPARED FOR
DEFUNIAK SPRINGS MUNICIPAL AIRPORT

DESIGNED BY:	AJM
DRAWN BY:	AJM
CHECKED BY:	JY
APPROVED BY:	JY
PROJECT NO:	2019.028.01
DATE:	11/1/2021

SHEET NUMBER

S5.07

THIS DOCUMENT CONTAINS PRIVILEGED AND PROPRIETARY INFORMATION, ALL OF WHICH IS EXPRESSLY PROVIDED BY AVCON, INC., FOR USE BY THE INTENDED RECIPIENT, AND FOR A SPECIFIC PURPOSE. WITHOUT THE E EXPRESS WRITTEN CONSENT OF AVCON, INC. ANY DISTRIBUTION, REPRODUCTION, OR OTHER USE OF THIS DOCUMENT, IN WHOLE OR IN PART, IS S TRICTLY PROHIBITED.

SYMBOLS	DESCRIPTION	SYMBOLS	DESCRIPTION
SD	SMOKE DAMPER		GATE VALVE
FS	COMBINATION FIRE/SMOKE DAMPER		CHECK VALVE
	FIRE DAMPER		GLOBE VALVE
F	FIRESTAT		PLUG VALVE
H	HUMIDSTAT		BUTTERFLY VALVE
T	TEMPERATURE SENSOR		STRAINER
VD OR	ADJUSTABLE VOLUME DAMPER		3/4" GATE VALVE WITH HOSE CONNECTION
M	MOTORIZED DAMPER		3-WAY CONTROL VALVE
FD	BAROMETRIC DAMPER		STRAIGHT THROUGH CONTROL VALVE
OBD	OPPOSED BLADE DAMPER		BALL VALVE
BDD	BACKDRAFT DAMPER		TEST PLUG
CO	CARBON DIOXIDE SENSOR		GAUGE STATION WITH COCK
°F	FREEZESTAT		THERMOMETER
S	SMOKE DETECTOR (BY DIVISION 16)		THERMOMETER WELL
AFM	AIR FLOW MONITORING STATION		PRESSURE RELIEF VALVE
07/M-3	INDICATES REFERENCE TO DETAIL 07, SHEET M-3. ALSO INDICATED BY: REF. 07/M-3.		PRESSURE REDUCING VALVE
		AV	AIR VENT
	FILTER SECTION		FLOW METER
	FLEXIBLE CONNECTION		UNION OR FLANGE
	MECHANICAL EQUIPMENT		FLOW CONTROL VALVE
	CEILING SUPPLY DIFFUSER	CHS	CHILLED WATER SUPPLY
	CEILING SUPPLY DIFFUSER	CHR	CHILLED WATER RETURN
		HWS	HOT WATER SUPPLY
	INDICATES REFERENCE TO SEC. 01, SHEET M-3	HWR	HOT WATER RETURN
		CD	CONDENSATE DRAIN
		RS	REFRIGERANT SUCTION LINE
	DUCTWORK	RL	REFRIGERANT LIQUID LINE
		AHU	AIR HANDLING UNIT
SP	STATIC PRESSURE SENSOR	EF	EXHAUST FAN
	STATIC PRESSURE SENSOR	SA	SUPPLY AIR
	POINT OF CONNECTION	OA	OUTSIDE AIR
		RA	RETURN AIR
	VOLUME DAMPER	ERU	ENERGY RECOVER UNIT
		T	TRANSFORMER
	CAP SECTION	WP	HOT WATER PUMP
CH	CHILLER	NG	NATURAL GAS
VAV	VARIABLE AIR VOLUME	ST	STEAM TRAP
		RH	ROOF HOOD

NOTE: NOT ALL SYMBOLS TABULATED ABOVE ARE NECESSARILY USED ON THE DRAWINGS.

MECHANICAL SYMBOLS

GENERAL NOTES

A. SITE VISIT-THE CONTRACTOR AND SUBCONTRACTOR SHALL VISIT THE FACILITY AND THOROUGHLY FAMILIARIZE THEMSELVES WITH THE EXISTING CONDITIONS. NO CLAIMS FOR ADDITIONAL WORK DUE TO OBSERVABLE CONDITIONS WILL BE CONSIDERED.

B. THE PLANS HAVE BEEN PREPARED BASED ON A RECENT SURVEY AND CONSTRUCTION DOCUMENTS FROM PREVIOUS PROJECTS AND ARE THE BEST SOURCES OF INFORMATION TO DATE. ALL PIPING EQUIPMENT, UTILITIES, ETC. SHALL BE FIELD VERIFIED. PLANS SHALL NOT BE SCALED.

C. REPORT ANY ALTERATION TO AND/OR DEVIATIONS FROM THE DRAWING AS REQUIRED BY THE REGULATORY AUTHORITIES TO THE ARCHITECT/ENGINEER AND SECURE HIS APPROVAL BEFORE STARTING ALTERATIONS.

D. PROVIDE EQUIPMENT CLEARANCE IN ACCORDANCE WITH THE MANUFACTURER'S INSTALLATION INSTRUCTIONS AND IN ACCORDANCE WITH ALL APPLICABLE CODES.

E. ALL WORK AND EQUIPMENT SHALL MEET THE REQUIREMENTS OF THE MOST RECENTLY REVISED VERSION OF ALL APPLICABLE LAWS, RULES, REGULATION AND ORDINANCES OF FEDERAL, STATE, AND LAW LOCAL AUTHORITIES, WHETHER INDICATED ON THE DRAWINGS OR NOT.

F. PATCH ALL WALL PENETRATIONS WHERE PIPING OR EQUIPMENT IS REMOVED AND WHERE OPENING IS NOT BEING REUSED. WALL SHALL BE SEALED TO PRE-CONSTRUCTION CONDITION AND MEET EXISTING WALL RATING.

G. PROVIDE ALL WALL PENETRATIONS WHERE PIPING OR EQUIPMENT IS REMOVED AND WHERE OPENING IS NOT BEING REUSED. WALL SHALL BE SEALED TO PRE-CONSTRUCTION CONDITION AND MEET EXISTING WALL RATING.

H. THE PIPING SHOWN ON THESE DRAWINGS ARE DIAGRAMMATIC. CONTRACTOR SHALL ARRANGE WORK IN A NEAT AND ORDERLY MANNER. THE CONTRACTOR SHALL MAKE ANY OFFSETS, TRANSITIONS, AND OTHER MINOR ADJUSTMENTS AS REQUIRED FOR A COMPLETE AND WORKING SYSTEM INSTALLATION.

I. DRAWINGS SHOW GENERAL SIZE AND APPROXIMATE LOCATIONS. THE DRAWINGS ARE INTENDED TO SHOW THE GENERAL ARRANGEMENT OF THE UTILITY SYSTEM. THE CONTRACTOR SHALL FIELD VERIFY ALL UTILITY CONNECTIONS SIZE, LOCATION, DEPTH. THE CONTRACTOR SHALL INSTALL ALL SYSTEMS ACCORDING TO THE ACTUAL FIELD CONDITIONS FOUND. ANY MECHANICAL SYSTEM COMPONENTS INSTALLED INCORRECTLY DUE TO FIELD CONDITIONS SHALL BE REMOVED AND INSTALLED CORRECTLY AT THE EXPENSE OF THE CONTRACTOR. THE CONTRACTOR SHALL NOT CUT ANY STRUCTURAL MEMBERS OF BUILDING WITHOUT PRIOR CONSENT OF ARCHITECT AND/OR STRUCTORAL ENGINEER.

J. ENGAGE A FACTORY AUTHORIZED SERVICE REPRESENTATIVE TO PERFORM START-UP SERVICES AND TO TRAIN OWNER'S MAINTENANCE PERSONNEL TO ADJUST. OPERATE AND MAINTAIN EQUIPMENT.

K. PROVIDE OPERATION AND MAINTENANCE MANUALS TO OWNER FOR ALL INSTALLED EQUIPMENT.

L. ALL PIPING ELEVATIONS INDICATED ON THIS DRAWING SET ARE APPROXIMATE AND ARE PROVIDED FOR INFORMATIONAL PURPOSES ONLY. THE CONTRACTOR SHALL FIELD VERIFY ALL PIPING ELEVATIONS IN THE FIELD PRIOR TO SUBMITTING A BID.

MECHANICAL SHEET INDEX

M-001	MECHANICAL SYMBOLS AND LEGENDS
M-101	OVERALL MECHANICAL FLOOR PLAN
M-102	MECHANICAL 1ST FLOOR PLAN - AREA A
M-103	MECHANICAL 1ST FLOOR PIPING PLAN - AREA A
HM-101	HANGAR MECHANICAL PLAN
M-501	MECHANICAL DETAILS
M-502	MECHANICAL DETAILS
M-503	MECHANICAL DETAILS
M-504	MECHANICAL ELEVATIONS
M-601	MECHANICAL SCHEDULES
M-701	MECHANICAL CONTROLS

DRAFT
NOT FOR CONSTRUCTION

AVCON
TRANSFORMING TODAY'S IDEAS INTO TOMORROW'S REALITY

ZEMP PEPPER, P.E.
FL LICENSE NO.:41147
FBPR CERTIFICATE OF AUTHORIZATION NO. 5057

NO.	DATE	REVISION	BY

MECHANICAL SYMBOLS AND LEGENDS

RELEASE FOR BID

AIRPORT TERMINAL AND HANGAR DEVELOPMENT

PREPARED FOR

DEFUNIAK SPRINGS MUNICIPAL AIRPORT

DESIGNED BY: **R. BLANCO**
DRAWN BY: **R. BLANCO**
CHECKED BY: **Z. PEPPER**
APPROVED BY: **Z. PEPPER**
PROJECT NO: **2019.028.01**
DATE: **November 1, 2021**

SHEET NUMBER

M-001

THIS DOCUMENT CONTAINS PRIVILEGED AND PROPRIETARY INFORMATION, ALL OF WHICH IS EXPRESSLY PROVIDED BY AVCON, INC., FOR USE BY THE INTENDED RECIPIENT, AND FOR A SPECIFIC PURPOSE. WITHOUT THE EXPRESS WRITTEN CONSENT OF AVCON, INC., ANY DISTRIBUTION, REPRODUCTION, OR OTHER USE OF THIS DOCUMENT, IN WHOLE OR IN PART, IS STRICTLY PROHIBITED.

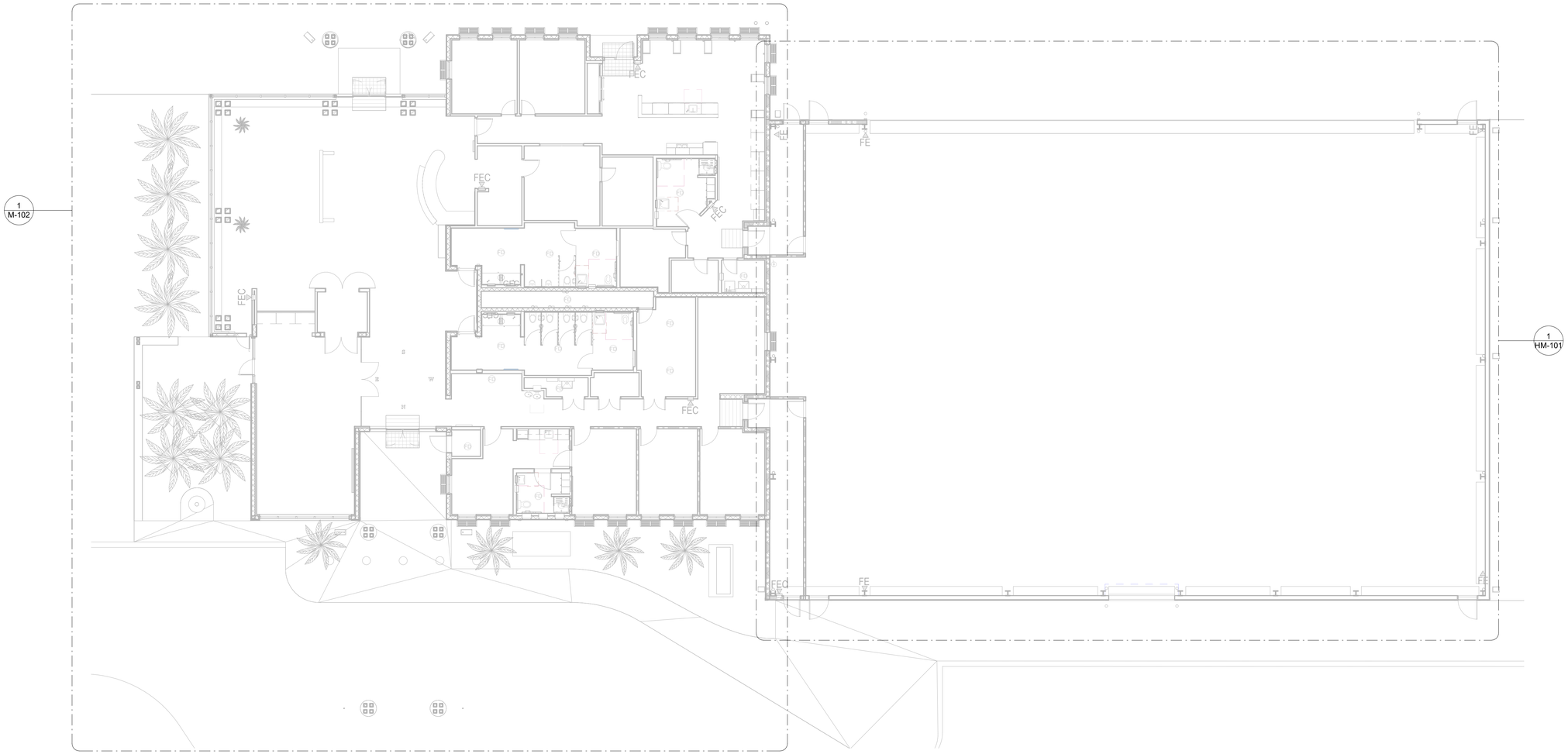

1 OVERALL MECHANICAL FLOOR PLAN
3/32" = 1'-0"

DRAFT
NOT FOR CONSTRUCTION

AVCON
TRANSFORMING TODAY'S IDEAS INTO TOMORROW'S REALITY

ZEMP PEPPER, P.E.
FL LICENSE NO.:41147
FBPR CERTIFICATE OF AUTHORIZATION NO. 5057

NO.	DATE	REVISION	BY

OVERALL MECHANICAL FLOOR PLAN

RELEASE FOR BID

AIRPORT TERMINAL AND HANGAR DEVELOPMENT

PREPARED FOR
DEFUNIAK SPRINGS MUNICIPAL AIRPORT

DESIGNED BY: **R. BLANCO**
DRAWN BY: **R. BLANCO**
CHECKED BY: **Z. PEPPER**
APPROVED BY: **Z. PEPPER**
PROJECT NO: **2019.028.01**
DATE: **November 1, 2021**

SHEET NUMBER

M-101

THIS DOCUMENT CONTAINS PRIVILEGED AND PROPRIETARY INFORMATION, ALL OF WHICH IS EXPRESSLY PROVIDED BY AVCON, INC., FOR USE BY THE INTENDED RECIPIENT, AND FOR A SPECIFIC PURPOSE. WITHOUT THE EXPRESS WRITTEN CONSENT OF AVCON, INC. ANY DISTRIBUTION, REPRODUCTION, OR OTHER USE OF THIS DOCUMENT, IN WHOLE OR IN PART, IS STRICTLY PROHIBITED.

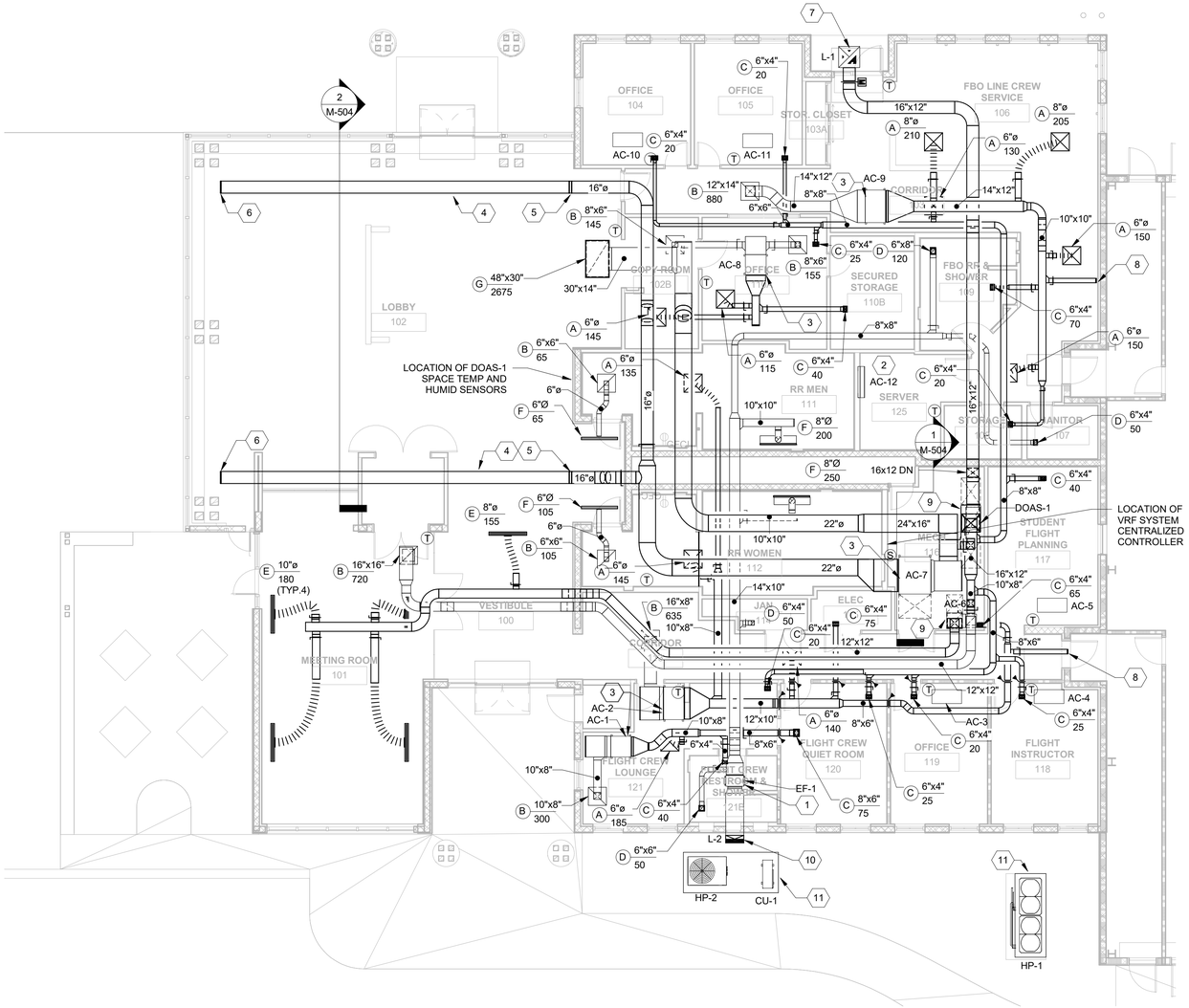

1 MECHANICAL 1ST FLOOR PLAN - AREA A
1/8" = 1'-0"

MECHANICAL GENERAL NOTES

A. SITE VISIT-THE CONTRACTOR AND SUBCONTRACTOR SHALL VISIT THE FACILITY AND THOROUGHLY FAMILIARIZE THEMSELVES WITH THE EXISTING CONDITIONS. NO CLAIMS FOR ADDITIONAL WORK DUE TO OBSERVABLE CONDITIONS WILL BE CONSIDERED.

B. REPORT ANY ALTERATION TO AND/OR DEVIATIONS FROM THE DRAWING AS REQUIRED BY THE REGULATORY AUTHORITIES TO THE ARCHITECT/ENGINEER AND SECURE HIS APPROVAL BEFORE STARTING ALTERATIONS.

C. PROVIDE EQUIPMENT CLEARANCES IN ACCORDANCE WITH THE MANUFACTURER'S INSTALLATION INSTRUCTIONS AND IN ACCORDANCE WITH ALL APPLICABLE CODES.

D. ALL WORK AND EQUIPMENT SHALL MEET THE REQUIREMENTS OF THE MOST RECENTLY REVISED VERSION OF ALL APPLICABLE LAWS, RULES, REGULATION AND ORDINANCES OF FEDERAL, STATE, AND LOCAL AUTHORITIES, WHETHER INDICATED ON THE DRAWINGS OR NOT.

E. ROOM TEMPERATURE CONTROLLERS SHALL BE MOUNTED AT 48" AFF UNLESS NOTED OTHERWISE. DO NOT INSTALL ABOVE DIMMER. ALIGN WITH TOP OF LIGHT SWITCHES.

F. PROVIDE FIRE STOPPING AT PENETRATIONS OF RATED ASSEMBLIES (SLAB AND RATED WALLS).

MECHANICAL KEY NOTES

1	INLINE EXHAUST FAN, REFERENCE DETAIL 2/M-502 AND EXHAUST FAN SCHEDULE ON SHEET M-601.
2	MINI-SPLIT AIR HANDLER UNIT MOUNTED AT MINIMUM OF 7'-6" AFF. REFER TO DETAIL 8/M-501. REFER TO MINI-SPLIT SYSTEM SCHEDULE ON SHEET M-601. EXACT LOCATION OF UNIT SHALL BE COORDINATED WITH IDF EQUIPMENT, CABLE BASKETS AND LIGHTING. REFER TO ELECTRICAL PLAN AND SYSTEMS PLANS (T SERIES SHEETS).
3	PROVIDE ABOVE CEILING CONCEALED DUCTED AIR HANDLER UNIT, REFER TO SCHEDULE ON SHEET M-601.
4	PROVIDE PERMEABLE FABRIC SA DUCT SYSTEM. DUCT SHALL INCLUDE PERFORATIONS FOR DIRECTIONAL AIR DISCHARGE PLACED AT THE LOWER QUARTER SECTION OF EACH DUCT FACING THE INSIDE OF THE LOBBY. THE FABRIC SA DUCT ROUTED ALONG THE EXTERIOR STORE FRONT WALL SHALL ALSO INCLUDE A SINGLE ROW OF PERFORATIONS THAT DISCHARGE TOWARDS THE EXTERIOR . EACH BRANCH SHALL SUPPLY 700 CFM. FABRIC AIR DUCTS SHALL BE SUPPORTED HORIZONTALLY AND VERTICALLY BY A STAINLESS STEEL CABLE SYSTEM. REFERENCE SUPPORT DETAILS 2/M-503, 3/M-503, AND 6/M-503. REFERENCE ARCHITECTURAL PLANS FOR ELEVATIONS.
5	TRANSITION FROM SHEET METAL DUCT TO FABRIC DUCT INSIDE SUFFIT SUCH THAT INLET COLLARS AND STRAPS ARE CONCEALED. PROVIDE A TRIM RING AT WALL PENETRATION. REFERENCE DETAIL 5/M-503.
6	CAP END OF FABRIC DUCT. REFERENCE DETAIL 5/M-503.
7	OUTDOOR AIR INTAKE LOUVER MOUNTED HORIZONTAL AT SOFFIT. PROVIDE WITH BIRD SCREEN. REFERENCE ARCHITECTURAL SECTION 3/A-311. REFERENCE DETAIL 4/M-502. PLENUM SHALL BE INSULATED IN ACCORDANCE WITH SPECIFICATION 23 07 00.
8	CAP FOR FUTURE CONNECTION, 75 CFM SERVING CORRIDOR.
9	REFERENCE NEW FLOOR-MOUNTED VERTICAL AIR HANDLER UNIT DETAIL 6/M-502. REFER TO MINI-SPLIT SYSTEM UNIT SCHEDULE ON SHEET M-601.
10	EXHAUST AIR LOUVER MOUNTED HORIZONTAL AT SOFFIT. PROVIDE WITH BIRD SCREEN. REFERENCE ARCHITECTURE SECTION. REFERENCE DETAIL 4/M-502. PLENUM SHALL BE INSULATED IN ACCORDANCE WITH SPECIFICATION 23 07 00.
11	PROVIDE EQUIPMENT PAD WITH MINIMUM CLEARANGE ON ALL SIDES. REFERENCE DETAIL 7/M-501.

DRAFT
NOT FOR CONSTRUCTION

AVCON
TRANSFORMING TODAY'S IDEAS INTO TOMORROW'S REALITY

ZEMP PEPPER, P.E.
FL LICENSE NO.:41147
FBPR CERTIFICATE OF AUTHORIZATION NO. 5057

NO.	DATE	REVISION	BY

MECHANICAL 1ST FLOOR PLAN - AREA A

RELEASE FOR BID

AIRPORT TERMINAL AND HANGAR DEVELOPMENT

PREPARED FOR

DEFUNIAK SPRINGS MUNICIPAL AIRPORT

DESIGNED BY:	**R. BLANCO**
DRAWN BY:	**R. BLANCO**
CHECKED BY:	**Z. PEPPER**
APPROVED BY:	**Z. PEPPER**
PROJECT NO:	**2019.028.01**
DATE:	**November 1, 2021**

SHEET NUMBER

M-102

THIS DOCUMENT CONTAINS PRIVILEGED AND PROPRIETARY INFORMATION, ALL OF WHICH IS EXPRESSLY PROVIDED BY AVCON, INC., FOR USE BY THE INTENDED RECIPIENT, AND FOR A SPECIFIC PURPOSE. WITHOUT THE EXPRESS WRITTEN CONSENT OF AVCON, INC. ANY DISTRIBUTION, REPRODUCTION, OR OTHER USE OF THIS DOCUMENT, IN WHOLE OR IN PART, IS STRICTLY PROHIBITED.

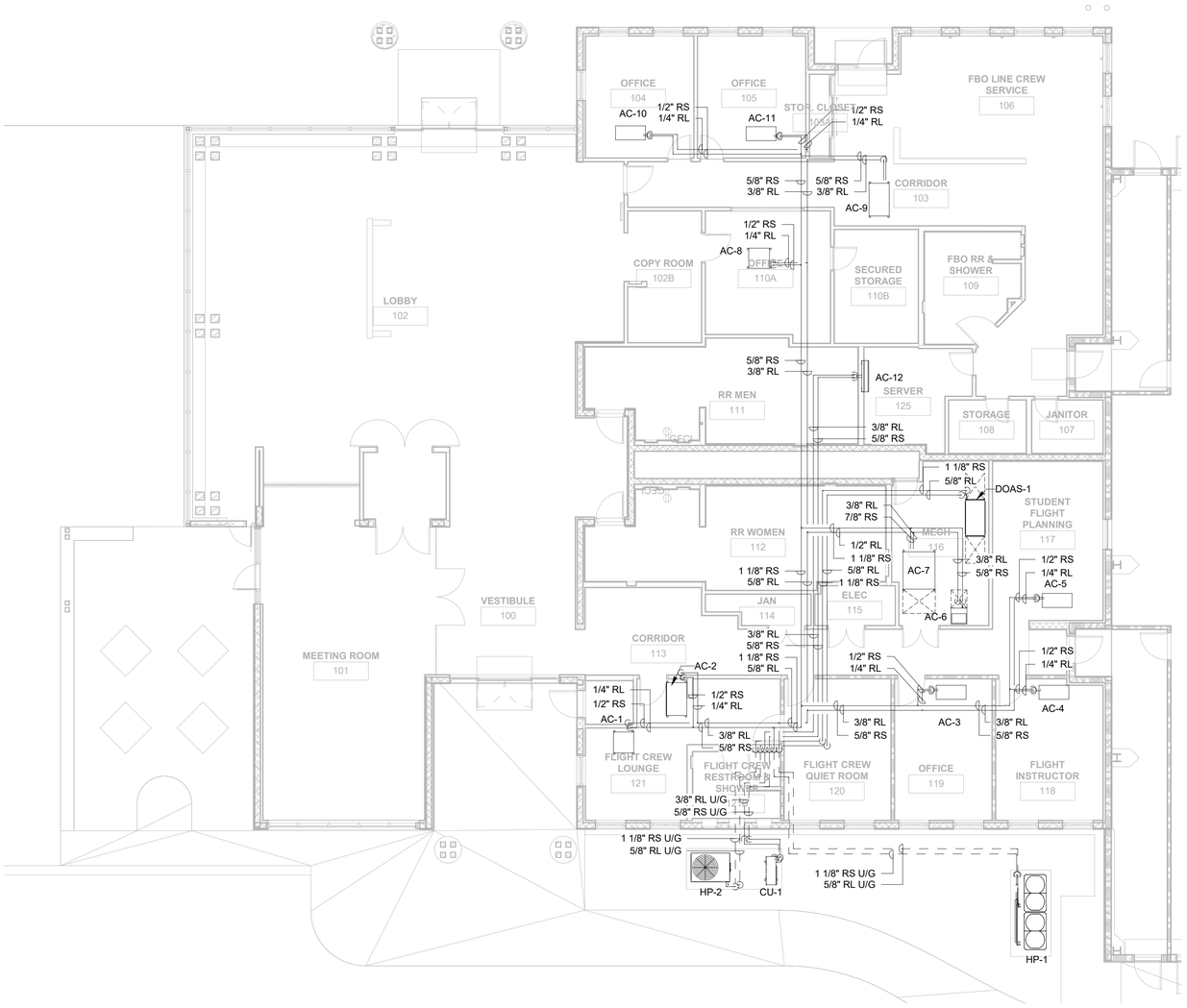

1 MECHANICAL 1ST FLOOR PLAN - AREA A -PIPING
1/8" = 1'-0"

MECHANICAL GENERAL NOTES

A. SITE VISIT-THE CONTRACTOR AND SUBCONTRACTOR SHALL VISIT THE FACILITY AND THOROUGHLY FAMILIARIZE THEMSELVES WITH THE EXISTING CONDITIONS. NO CLAIMS FOR ADDITIONAL WORK DUE TO OBSERVABLE CONDITIONS WILL BE CONSIDERED.

B. REPORT ANY ALTERATION TO AND/OR DEVIATIONS FROM THE DRAWING AS REQUIRED BY THE REGULATORY AUTHORITIES TO THE ARCHITECT/ENGINEER AND SECURE HIS APPROVAL BEFORE STARTING ALTERATIONS.

C. PROVIDE EQUIPMENT CLEARANCES IN ACCORDANCE WITH THE MANUFACTURER'S INSTALLATION INSTRUCTIONS AND IN ACCORDANCE WITH ALL APPLICABLE CODES.

D. ALL WORK AND EQUIPMENT SHALL MEET THE REQUIREMENTS OF THE MOST RECENTLY REVISED VERSION OF ALL APPLICABLE LAWS, RULES, REGULATION AND ORDINANCES OF FEDERAL, STATE, AND LOCAL AUTHORITIES, WHETHER INDICATED ON THE DRAWINGS OR NOT.

E. ROOM TEMPERATURE CONTROLLERS SHALL BE MOUNTED AT 48" AFF UNLESS NOTED OTHERWISE. DO NOT INSTALL ABOVE DIMMER. ALIGN WITH TOP OF LIGHT SWITCHES.

F. PROVIDE FIRE STOPPING AT PENETRATIONS OF RATED ASSEMBLIES (SLAB AND RATED WALLS).

DRAFT
NOT FOR CONSTRUCTION

AVCON
TRANSFORMING TODAY'S IDEAS INTO TOMORROW'S REALITY

ZEMP PEPPER, P.E.
FL LICENSE NO.:41147
FBPR CERTIFICATE OF AUTHORIZATION NO. 5057

NO.	DATE	REVISION	BY

MECHANICAL 1ST FLOOR PIPING PLAN - AREA A

RELEASE FOR BID

AIRPORT TERMINAL AND HANGAR DEVELOPMENT

PREPARED FOR

DEFUNIAK SPRINGS MUNICIPAL AIRPORT

DESIGNED BY:	R. BLANCO
DRAWN BY:	R. BLANCO
CHECKED BY:	Z. PEPPER
APPROVED BY:	Z. PEPPER
PROJECT NO:	2019.028.01
DATE:	November 1, 2021

SHEET NUMBER

M-103

THIS DOCUMENT CONTAINS PRIVILEGED AND PROPRIETARY INFORMATION, ALL OF WHICH IS EXPRESSLY PROVIDED BY AVCON, INC., FOR USE BY THE INTENDED RECIPIENT, AND FOR A SPECIFIC PURPOSE, WITHOUT THE EXPRESS WRITTEN CONSENT OF AVCON, INC. ANY DISTRIBUTION, REPRODUCTION, OR OTHER USE OF THIS DOCUMENT, IN WHOLE OR IN PART, IS STRICTLY PROHIBITED.

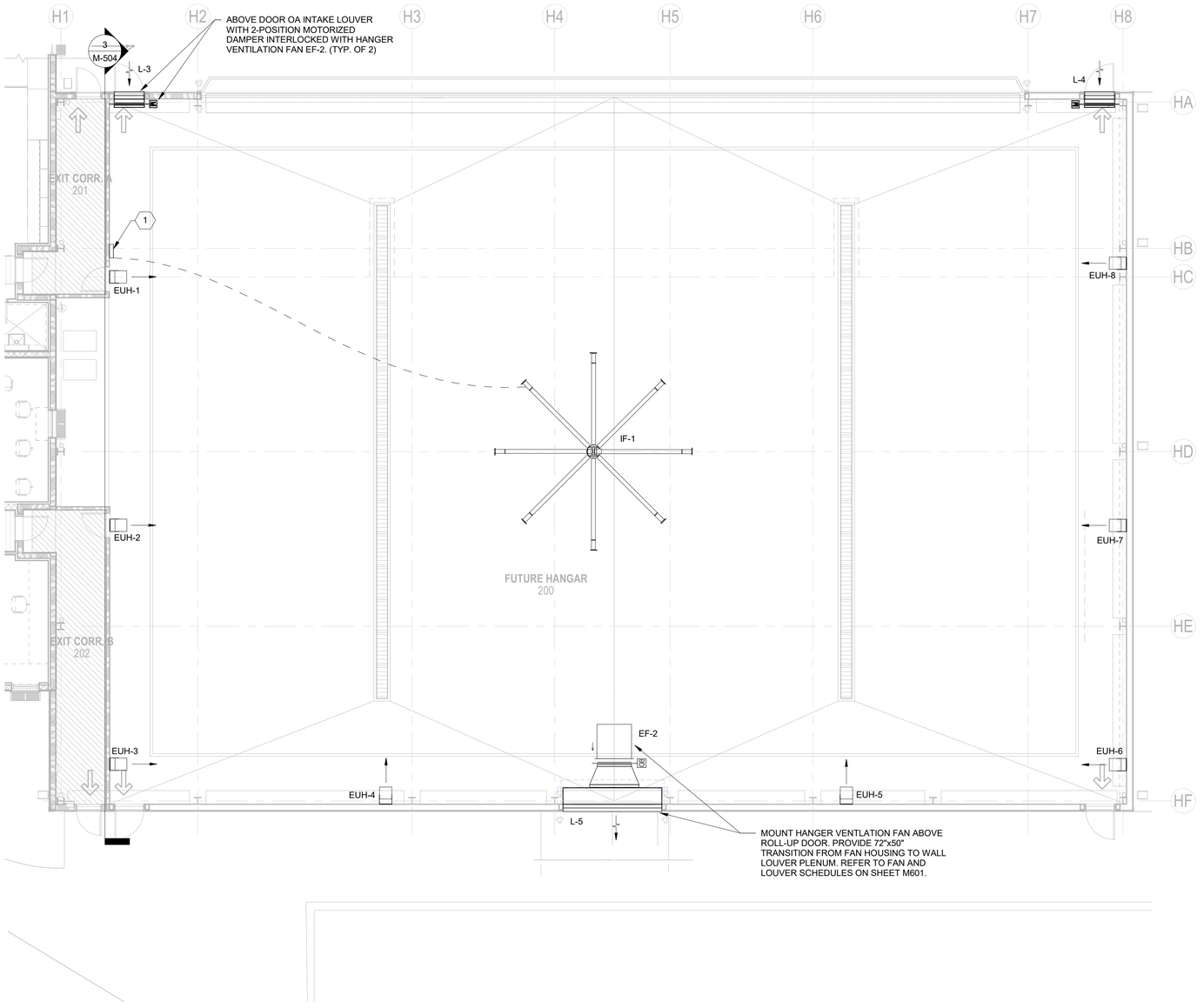

1 HANGAR MECHANICAL PLAN
1/8" = 1'-0"

MECHANICAL GENERAL NOTES

A. SITE VISIT-THE CONTRACTOR AND SUBCONTRACTOR SHALL VISIT THE FACILITY AND THOROUGHLY FAMILIARIZE THEMSELVES WITH THE EXISTING CONDITIONS. NO CLAIMS FOR ADDITIONAL WORK DUE TO OBSERVABLE CONDITIONS WILL BE CONSIDERED.

B. REPORT ANY ALTERATION TO AND/OR DEVIATIONS FROM THE DRAWING AS REQUIRED BY THE REGULATORY AUTHORITIES TO THE ARCHITECT/ENGINEER AND SECURE HIS APPROVAL BEFORE STARTING ALTERATIONS.

C. PROVIDE EQUIPMENT CLEARANCES IN ACCORDANCE WITH THE MANUFACTURER'S INSTALLATION INSTRUCTIONS AND IN ACCORDANCE WITH ALL APPLICABLE CODES.

D. ALL WORK AND EQUIPMENT SHALL MEET THE REQUIREMENTS OF THE MOST RECENTLY REVISED VERSION OF ALL APPLICABLE LAWS, RULES, REGULATION AND ORDINANCES OF FEDERAL, STATE, AND LOCAL AUTHORITIES, WHETHER INDICATED ON THE DRAWINGS OR NOT.

E. ROOM TEMPERATURE CONTROLLERS SHALL BE MOUNTED AT 48" AFF UNLESS NOTED OTHERWISE. DO NOT INSTALL ABOVE DIMMER. ALIGN WITH TOP OF LIGHT SWITCHES.

F. PROVIDE FIRE STOPPING AT PENETRATIONS OF RATED ASSEMBLIES (SLAB AND RATED WALLS).

MECHANICAL KEY NOTES

1	PROVIDE HVLS INDUSTRIAL FAN CONTROLLER, REFER TO FAN SCHEDULE ON SHEET M601.

DRAFT
NOT FOR CONSTRUCTION

AVCON
TRANSFORMING TODAY'S IDEAS INTO TOMORROW'S REALITY

ZEMP PEPPER, P.E.
FL LICENSE NO.:41147
FBPR CERTIFICATE OF AUTHORIZATION NO. 5057

NO.	DATE	REVISION	BY

HANGAR MECHANICAL PLAN

RELEASE FOR BID

AIRPORT TERMINAL AND HANGAR DEVELOPMENT

PREPARED FOR

DEFUNIAK SPRINGS MUNICIPAL AIRPORT

DESIGNED BY: **R. BLANCO**
DRAWN BY: **R. BLANCO**
CHECKED BY: **Z. PEPPER**
APPROVED BY: **Z. PEPPER**
PROJECT NO: **2019.028.01**
DATE: **November 1, 2021**

SHEET NUMBER

HM-101

THIS DOCUMENT CONTAINS PRIVILEGED AND PROPRIETARY INFORMATION, ALL OF WHICH IS EXPRESSLY PROVIDED BY AVCON, INC., FOR USE BY THE INTENDED RECIPIENT, AND FOR A SPECIFIC PURPOSE. WITHOUT THE EXPRESS WRITTEN CONSENT OF AVCON, INC., ANY DISTRIBUTION, REPRODUCTION, OR OTHER USE OF THIS DOCUMENT, IN WHOLE OR IN PART, IS STRICTLY PROHIBITED.

1. CONDENSING UNIT
2. COMPRESSOR ACCESS PANEL
3. BACK-SEATED REFRIGERANT VALVE
4. REFRIGERANT SUCTION LINE WITH INSULATION
5. SIGHT GLASS WITH MOISTURE INDICATOR
6. REFRIGERANT LIQUID LINE
7. CONDUIT - POWER AND CONTROL
8. REFRIGERANT GAUGE CONNECTION
9. CONDENSER COIL
10. COIL GUARD
11. FAN GUARD
12. REINFORCED CONCRETE EQUIPMENT PAD

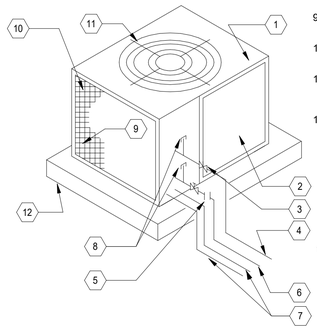

NOTES:

1. PROVIDE ACCESS TO CONDENSER UNIT PER MANUFACTURER'S RECOMMENDATIONS.

1 CONDENSER UNIT DETAIL
NOT TO SCALE

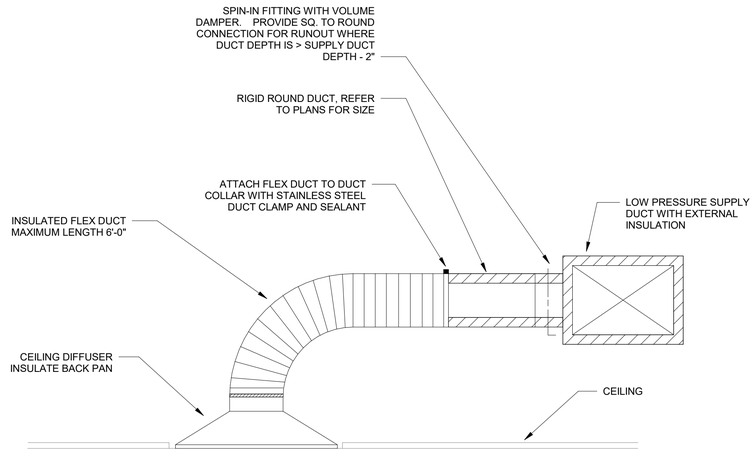

2 CEILING DIFFUSER DETAIL
NOT TO SCALE

NOTES:

INSULATED FLEX DUCT SHALL BE SEALED AT DIFFUSER CONNECTION AND HARD DUCT CONNECTION. FLEX DUCT VAPOR BARRIER SHALL EXTEND OVER THE SEALED CONNECTIONS AND BE SEALED TO ADJACENT VAPOR BARRIER TO PREVENT ANY CONDENSATION.

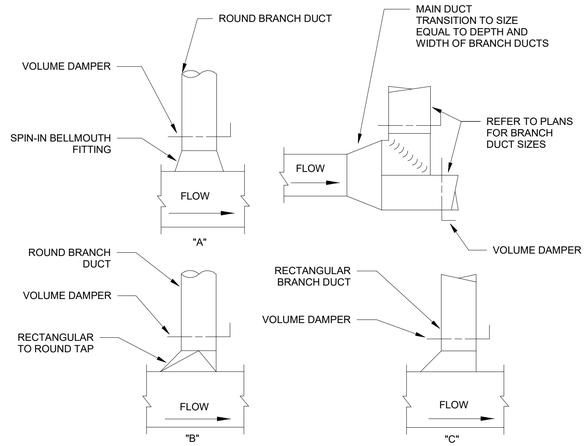

NOTES:

1. USE TYPE "A" CONNECTION ONLY FOR BRANCHES TO SINGLE DIFFUSERS, TERMINAL BOXES OR GRILLES FROM THE MAIN.
2. USE TYPE "B" OR "C" BRANCH WHERE BRANCH FLOW IS 20% OR LESS OF MAIN.
3. USE TEE SPLIT WHERE BRANCH FLOW IS MORE THAN 20% OF MAIN.
4. FOR TYPE "A" CONNECTION TO DIFFUSERS, THE ROUND DUCT RUN-OUT SIZE SHALL BE THE SAME SIZE AS THE NECK OF DIFFUSER, UNLESS OTHERWISE INDICATED.

3 BRANCH DUCT DETAIL
NOT TO SCALE

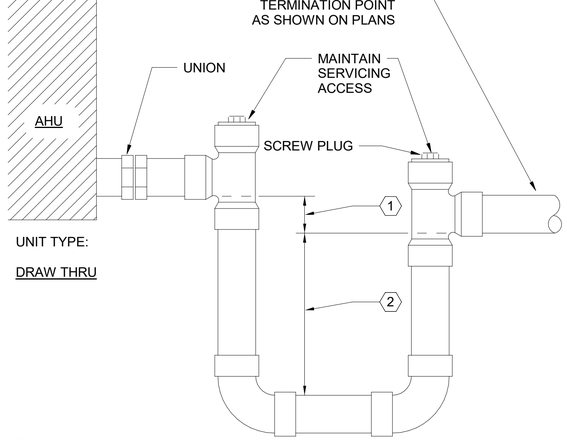

1 DIMENSION TO BE 1" GREATER THAN SUCTION PRESSURE OF UNIT (IN. W.G.)

2 DIMENSION TO BE 1/2 TOTAL PRESSURE OF UNIT (IN. W.G.)

4 CONDENSATE DRAIN DETAIL
NOT TO SCALE

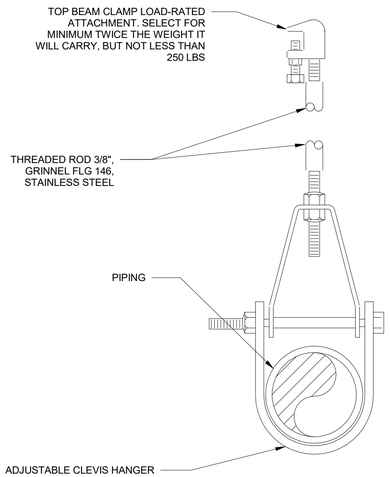

5 PIPE HANGER DETAIL
NOT TO SCALE

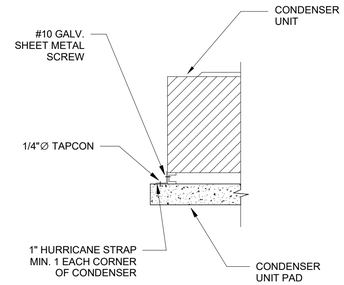

6 CONDENSER UNIT TIE-DOWN DETAIL
NOT TO SCALE

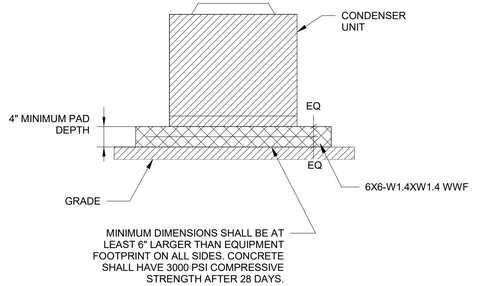

7 CONDENSER UNIT PAD DETAIL
NOT TO SCALE

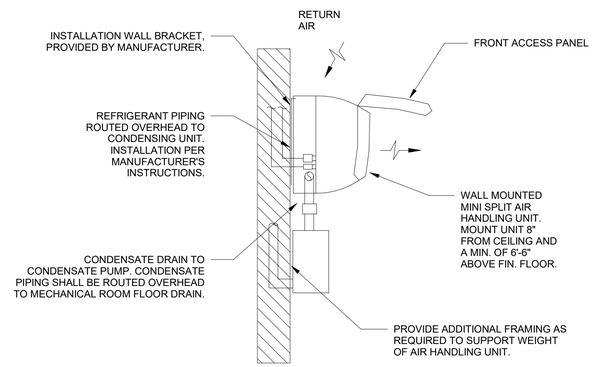

8 MINI SPLIT AIR HANDLER DETAIL
NOT TO SCALE

DRAFT
NOT FOR CONSTRUCTION

AVCON
TRANSFORMING TODAY'S IDEAS INTO TOMORROW'S REALITY

ZEMP PEPPER, P.E.
FL LICENSE NO.:41147
FBPR CERTIFICATE OF AUTHORIZATION NO. 5057

NO.	DATE	REVISION	BY

MECHANICAL DETAILS

RELEASE FOR BID

AIRPORT TERMINAL AND HANGAR DEVELOPMENT

PREPARED FOR

DEFUNIAK SPRINGS MUNICIPAL AIRPORT

DESIGNED BY:	**R. BLANCO**
DRAWN BY:	**R. BLANCO**
CHECKED BY:	**Z. PEPPER**
APPROVED BY:	**Z. PEPPER**
PROJECT NO:	**2019.028.01**
DATE:	**November 1, 2021**

SHEET NUMBER

M-501

THIS DOCUMENT CONTAINS PRIVILEGED AND PROPRIETARY INFORMATION, ALL OF WHICH IS EXPRESSLY PROVIDED BY AVCON, INC., FOR USE BY THE INTENDED RECIPIENT, AND FOR A SPECIFIC PURPOSE, WITHOUT THE EXPRESS WRITTEN CONSENT OF AVCON, INC. ANY DISTRIBUTION, REPRODUCTION, OR OTHER USE OF THIS DOCUMENT, IN WHOLE OR IN PART, IS STRICTLY PROHIBITED.

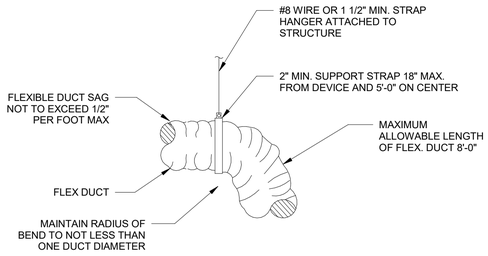

FLEX DUCT

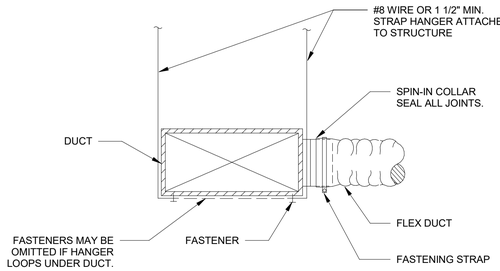

RIGID RECTANGULAR DUCT

1 DUCTWORK SUPPORT DETAILS
NOT TO SCALE

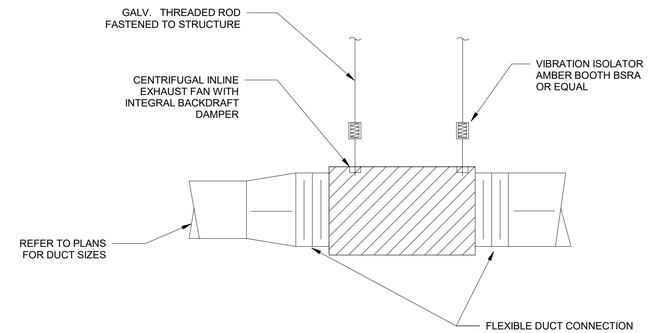

2 INLINE FAN DETAIL
NOT TO SCALE

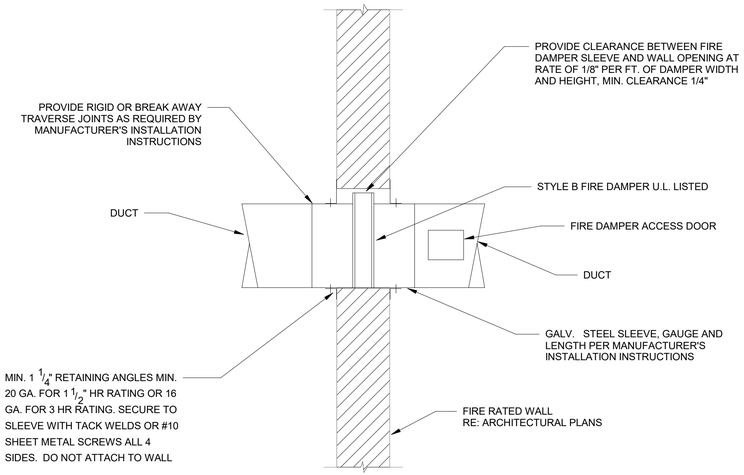

3 FIRE DAMPER DETAIL
NOT TO SCALE

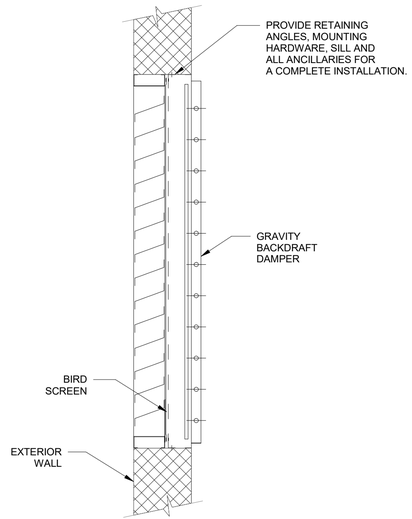

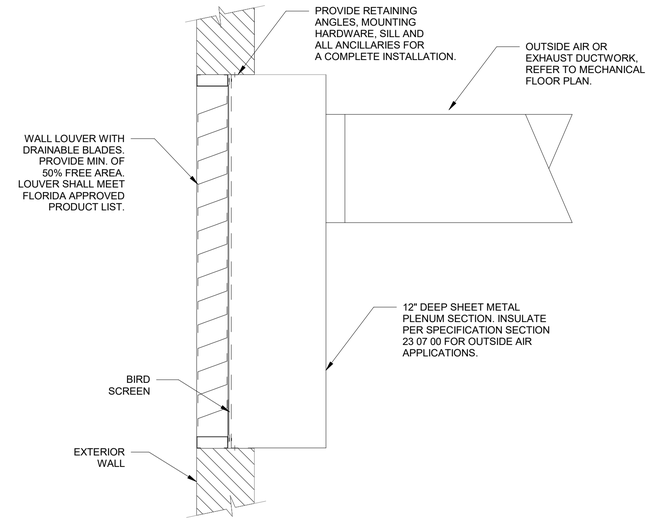

4 LOUVER DETAILS
NOT TO SCALE

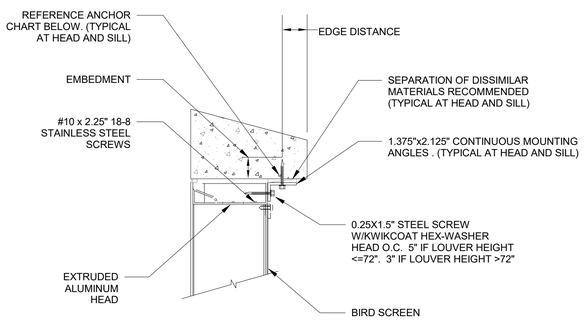

BUILDING CONSTRUCTION TYPE	BLDG MATERIAL MINIMUM	ANCHOR THICKNESS MIN.	ANCHOR TYPE *	MAT'L***	DIA.	HEIGHT MAX.	SPACING MAX.	EDGE MAX.	EMBED. MAX.
MASONRY	3 KSI	**	BUILDEX TAPCON	410 SS	1/4"	72"	6"	2-1/8"	1-3/4"

* FASTENERS SHALL BE HEX HEAD STYLE
** VARIES WITH SIZE OF FASTENER USED
*** LAG SCREWS SHALL HAVE STRENGTHS OF MINIMUM GRADE 1 STEEL, OTHER BOLTS AND SCREWS SHALL HAVE STRENGTHS OF MINIMUM GRADE 2 STEEL.

5 LOUVER ANCHORING DETAIL
NOT TO SCALE

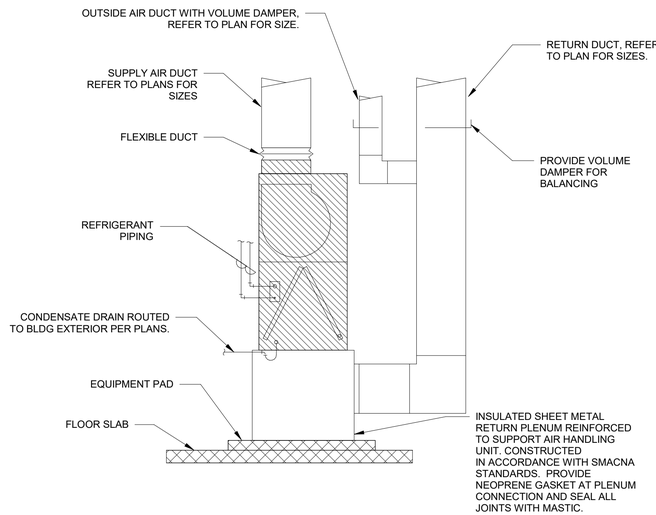

6 VERTICAL AIR HANDLER UNIT DETAIL
NOT TO SCALE

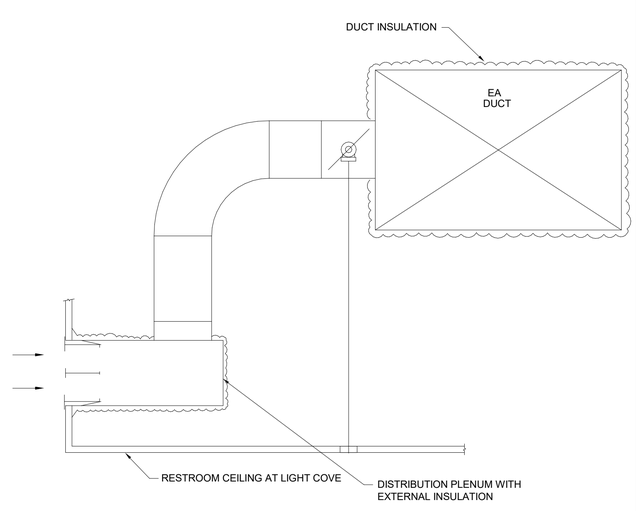

7 BATHROOM EXHAUST DETAIL
NOT TO SCALE

DRAFT
NOT FOR CONSTRUCTION

AVCON
TRANSFORMING TODAY'S IDEAS INTO TOMORROW'S REALITY

ZEMP PEPPER, P.E.
FL LICENSE NO.:41147
FBPR CERTIFICATE OF AUTHORIZATION NO. 5057

NO.	DATE	REVISION	BY

MECHANICAL DETAILS

RELEASE FOR BID

AIRPORT TERMINAL AND HANGAR DEVELOPMENT

PREPARED FOR
DEFUNIAK SPRINGS MUNICIPAL AIRPORT

DESIGNED BY:	**R. BLANCO**
DRAWN BY:	**R. BLANCO**
CHECKED BY:	**Z. PEPPER**
APPROVED BY:	**Z. PEPPER**
PROJECT NO:	**2019.028.01**
DATE:	**November 1, 2021**

SHEET NUMBER

M-502

THIS DOCUMENT CONTAINS PRIVILEGED AND PROPRIETARY INFORMATION, ALL OF WHICH IS EXPRESSLY PROVIDED BY AVCON, INC., FOR USE BY THE INTENDED RECIPIENT, AND FOR A SPECIFIC PURPOSE. IN WHOLE OR IN PART, IS STRICTLY PROHIBITED. ANY DISTRIBUTION, REPRODUCTION, OR OTHER USE OF THIS DOCUMENT, WITHOUT THE EXPRESS WRITTEN CONSENT OF AVCON, INC.

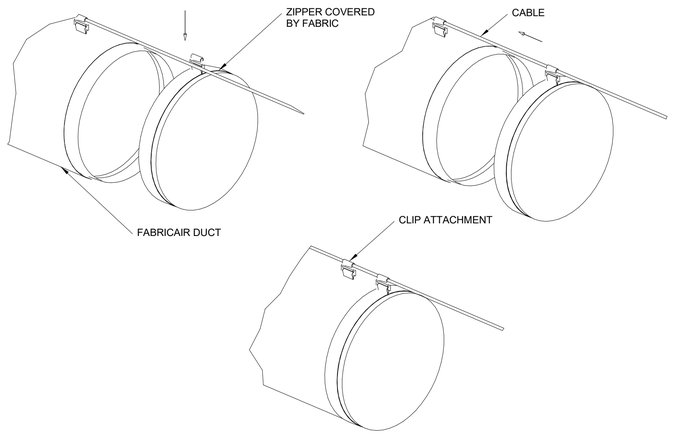

1 FABRIC DUCT CAP DETAIL
NOT TO SCALE

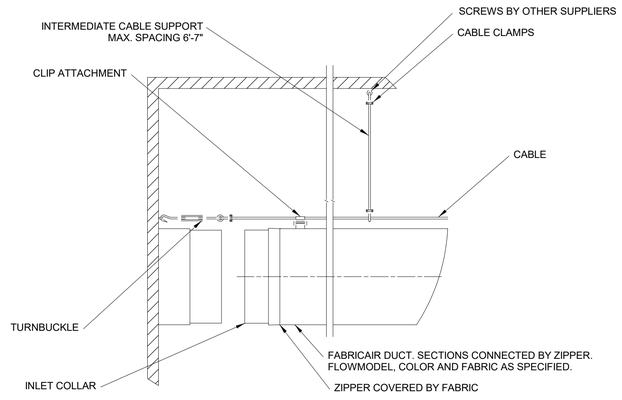

2 FABRIC DUCT SUPPORT DETAIL
NOT TO SCALE

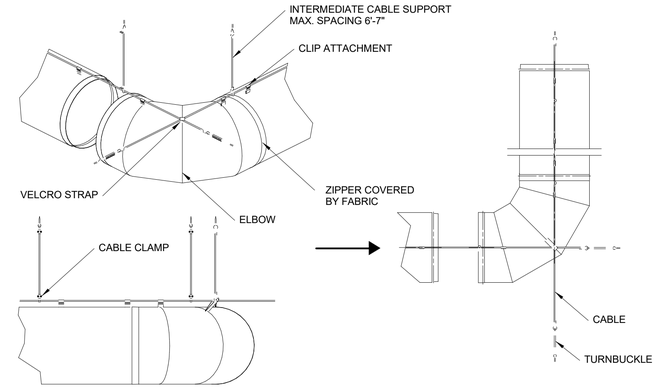

3 FABRIC DUCT ELBOW DETAIL
NOT TO SCALE

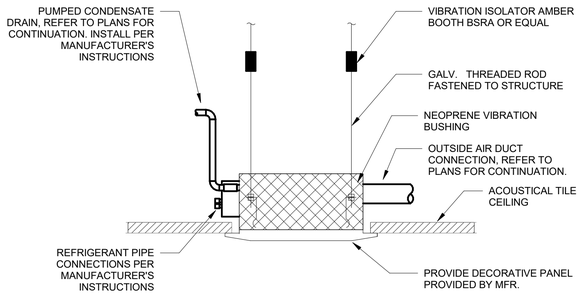

4 CASSETTE DETAIL
NOT TO SCALE

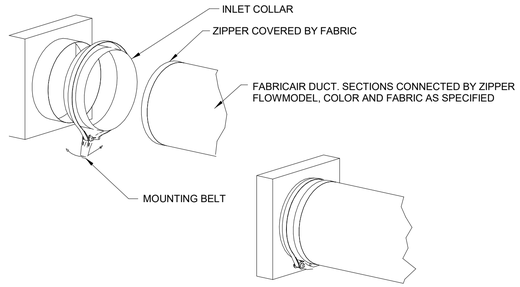

5 SHEET METAL TO FABRIC DUCT TRANSITION DETAIL
NOT TO SCALE

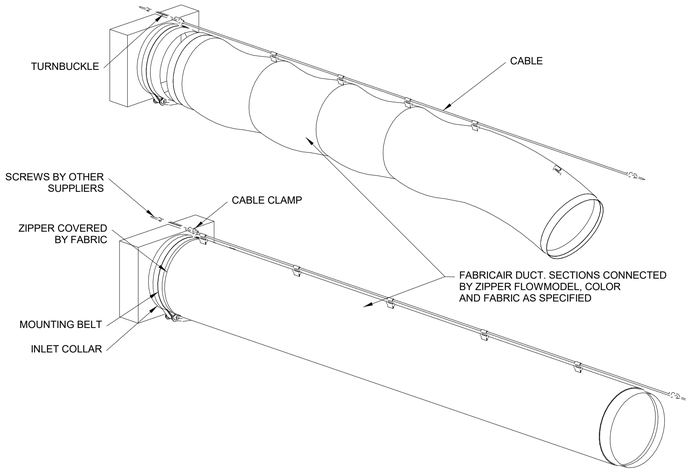

6 FABRIC DUCT CONNECTION DETAIL
NOT TO SCALE

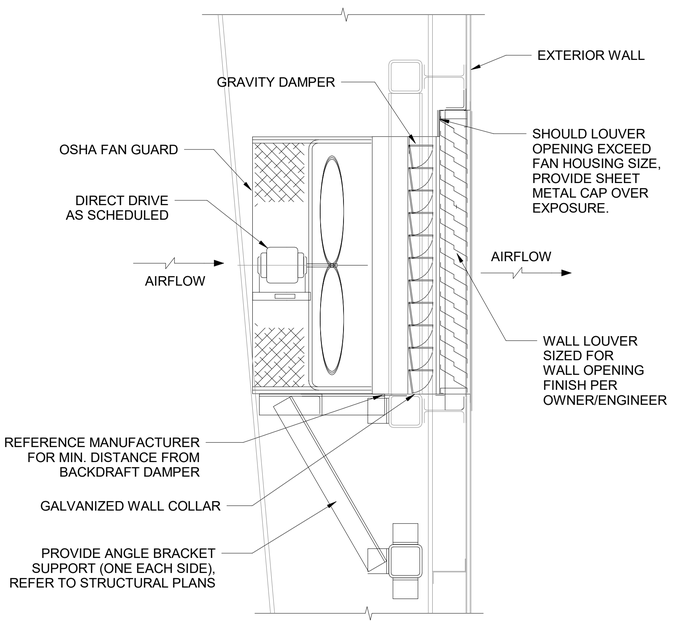

7 PROP FAN DETAIL
NOT TO SCALE

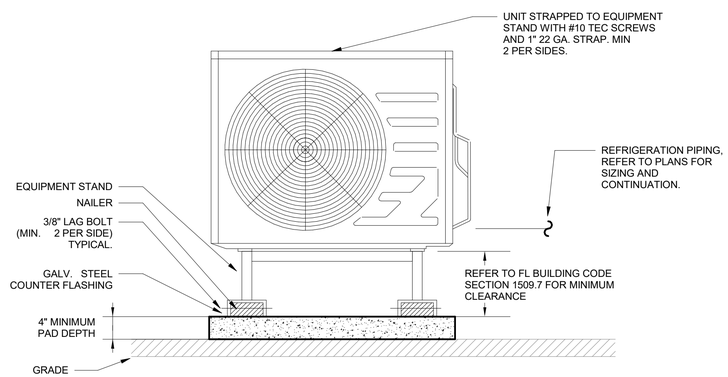

8 MINI SPLIT CONDENSING UNIT DETAIL
NOT TO SCALE

DRAFT
NOT FOR CONSTRUCTION

AVCON
TRANSFORMING TODAY'S IDEAS INTO TOMORROW'S REALITY

ZEMP PEPPER, P.E.
FL LICENSE NO.:41147
FBPR CERTIFICATE OF AUTHORIZATION NO. 5057

NO.	DATE	REVISION	BY

MECHANICAL DETAILS

RELEASE FOR BID

AIRPORT TERMINAL AND HANGAR DEVELOPMENT

PREPARED FOR
DEFUNIAK SPRINGS MUNICIPAL AIRPORT

DESIGNED BY:	**R. BLANCO**
DRAWN BY:	**R. BLANCO**
CHECKED BY:	**Z. PEPPER**
APPROVED BY:	**Z. PEPPER**
PROJECT NO:	**2019.028.01**
DATE:	**November 1, 2021**

SHEET NUMBER

M-503

THIS DOCUMENT CONTAINS PRIVILEGED AND PROPRIETARY INFORMATION, ALL OF WHICH IS EXPRESSLY PROVIDED BY AVCON, INC., FOR USE BY THE INTENDED RECIPIENT, AND FOR A SPECIFIC PURPOSE. WITHOUT THE EXPRESS WRITTEN CONSENT OF AVCON, INC., ANY DISTRIBUTION, REPRODUCTION, OR OTHER USE OF THIS DOCUMENT, IN WHOLE OR IN PART, IS STRICTLY PROHIBITED.

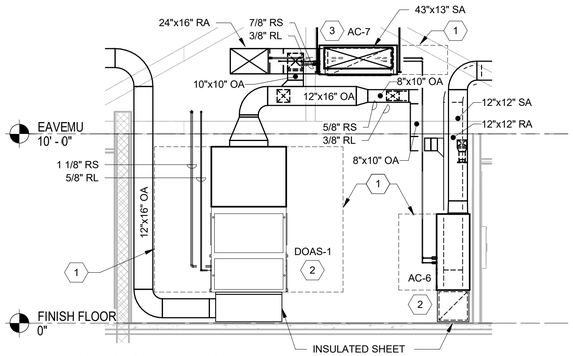

1 MECHANICAL ROOM ELEVATION
1/4" = 1'-0"

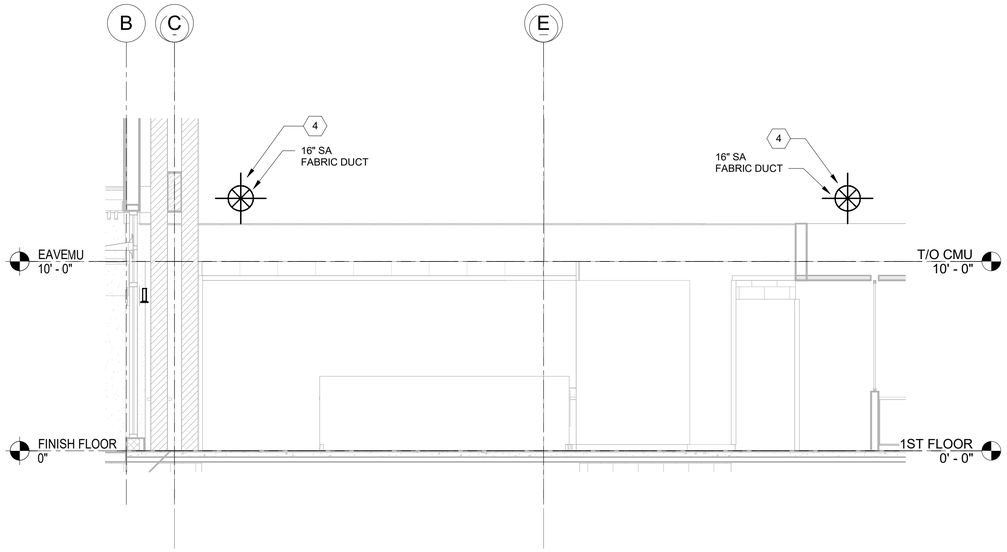

2 LOBBY ELEVATION
1/4" = 1'-0"

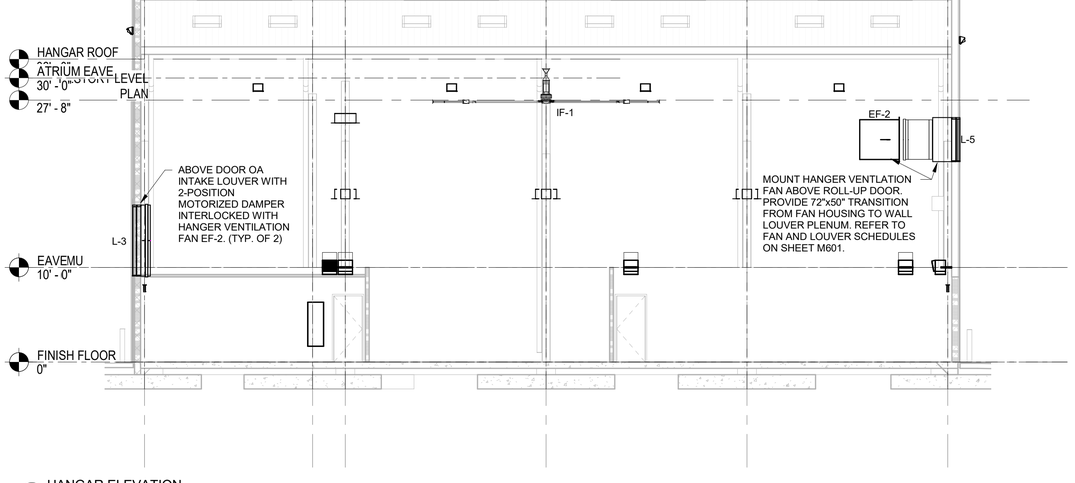

3 HANGAR ELEVATION
1/8" = 1'-0"

MECHANICAL KEY NOTES

1	MAINTAIN REQUIRED SERVICE CLEARANCE FOR MECHANICAL EQUIPMENT.
2	REFERENCE NEW FLOOR-MOUNTED VERTICAL AIR HANDLER UNIT DETAIL 6/M-502. REFER TO MINI-SPLIT SYSTEM UNIT SCHEDULE ON SHEET M-601.
3	PROVIDE ABOVE CEILING CONCEALED DUCTED AIR HANDLER UNIT, REFER TO SCHEDULE ON SHEET M-601.
4	PROVIDE PERMEABLE FABRIC SA DUCT SYSTEM. DUCT SHALL INCLUDE PERFORATIONS FOR DIRECTIONAL AIR DISCHARGE PLACED AT THE LOWER QUARTER SECTION OF EACH DUCT FACING THE INSIDE OF THE LOBBY. THE FABRIC SA DUCT ROUTED ALONG THE EXTERIOR STORE FRONT WALL SHALL ALSO INCLUDE A SINGLE ROW OF PERFORATIONS THAT DISCHARGE TOWARDS THE EXTERIOR. EACH BRANCH SHALL SUPPLY 700 CFM. FABRIC AIR DUCTS SHALL BE SUPPORTED HORIZONTALLY AND VERTICALLY BY A STAINLESS STEEL CABLE SYSTEM. REFERENCE SUPPORT DETAILS 2/M-503, 3/M-503, AND 6/M-503. REFERENCE ARCHITECTURAL PLANS FOR ELEVATIONS.

DRAFT
NOT FOR CONSTRUCTION

AVCON
TRANSFORMING TODAY'S IDEAS INTO TOMORROW'S REALITY

ZEMP PEPPER, P.E.
FL LICENSE NO.:41147
FBPR CERTIFICATE OF AUTHORIZATION NO. 5057

NO.	DATE	REVISION	BY

MECHANICAL ELEVATIONS

RELEASE FOR BID

AIRPORT TERMINAL AND HANGAR DEVELOPMENT

PREPARED FOR
DEFUNIAK SPRINGS MUNICIPAL AIRPORT

DESIGNED BY:	**R. BLANCO**
DRAWN BY:	**R. BLANCO**
CHECKED BY:	**Z. PEPPER**
APPROVED BY:	**Z. PEPPER**
PROJECT NO:	**2019.028.01**
DATE:	**November 1, 2021**

SHEET NUMBER

M-504

THIS DOCUMENT CONTAINS PRIVILEGED AND PROPRIETARY INFORMATION, ALL OF WHICH IS EXPRESSLY PROVIDED BY AVCON, INC., FOR USE BY THE INTENDED RECIPIENT, AND FOR A SPECIFIC PURPOSE. WITHOUT THE EXPRESS WRITTEN CONSENT OF AVCON, INC., ANY DISTRIBUTION, REPRODUCTION, OR OTHER USE OF THIS DOCUMENT, IN WHOLE OR IN PART, IS STRICTLY PROHIBITED.

VRF SYSTEM SCHEDULE

1. BASIS OF DESIGN MODEL NUMBERS ARE BASED ON TRANE MITSUBISHI N-GEN MULTI VRF - Y SERIES.

2. PROVIDE 30% FILTER.

3. PROVIDE HEAT PUMP TWINNING KIT, MINI CONDENSATE PUMPS, FILTER DRYERS, ETC. FURNISH ALL OF THE ACCESSORIES NECESSARY FOR A COMPLETE VRF SYSTEM.

4. REFER TO SHEET M-701 FOR CONTROLS DETAILS.

AIR HANDLER																	HEAT PUMP UNIT										
							COOLING COIL SECTION					HEATING COIL SECTION																
PLAN MARK	LOCATION	SERVES	UNIT TYPE	TOTAL (CFM)	OSA (CFM) PRE-TREATED	MAX E.S.P. IN. WG.	TOTAL CAP. (MBH)	SENS. CAP. (MBH)	E.A.T. (°F) D.B.	E.A.T. (°F) W.B.	L.A.T. (°F) D.B.	HEATING CAP. (MBH)	E.A.T (°F) DB	L.A.T. (°F) DB	MODEL NO. (TRANE)	WEIGHT (LBS)	VOLTS	PH	PLAN MARK	SEER	COOLING CAP. (MBH)	HEATING CAP. (MBH)	NO. COMP.	CAPACITY STEPS	REFRIG.	WEIGHT (LBS)	MODEL NO. (TRANE)	VOLTS	PH
AC-1	CEILING	FLIGHT CREW	HORIZONTAL	300	0	0.6	7.2	5.8	75 °F	64 °F	57 °F	6.4	70 °F	90 °F	TPEFYP008MA143A	49	208	1	HP-1	26.7	192.6	171.9	2	VRF	R410A	560	TUHYP2164BN40AN	460	3
AC-2	CEILING	RESTROOMS, UTILITY	HORIZONTAL	685	0	1.0	21.6	17.3	75 °F	64 °F	57 °F	19.3	70 °F	90 °F	TPEFYP024MA143A	67	208	1											
AC-3	CEILING	OFFICE 119	CASETTE	307	0		5.4	4.6	75 °F	64 °F	61 °F	4.8	70 °F	85 °F	TPMFYP006BM140F	31	208	1											
AC-4	CEILING	FLIGHT INSTRUCTOR	CASETTE	307	0		5.4	4.6	75 °F	64 °F	61 °F	4.8	70 °F	85 °F	TPMFYP006BM140F	31	208	1											
AC-5	CEILING	STUDENT FLIGHT	CASETTE	307	0		5.4	4.6	75 °F	64 °F	61 °F	4.8	70 °F	85 °F	TPMFYP006BM140F	31	208	1											
AC-6	MECH. RM.	MEETING ROOM	VERTICAL	875	200	0.8	27.0	19.8	75 °F	64 °F	54 °F	24.3	70 °F	96 °F	TPVFYP030AM141A	115	208	1											
AC-7	CEILING	LOBBY	HORIZONTAL	2966	290	1.0	86.5	64.5	75 °F	64 °F	55 °F	77.2	70 °F	94 °F	TPEFYP096MH140A	221	208	1											
AC-8	CEILING	OFFICE 110A, STORAGE	HORIZONTAL	300	0	0.6	7.2	5.8	75 °F	64 °F	57 °F	6.4	70 °F	90 °F	TPEFYP008MA143A	49	208	1											
AC-9	CEILING	FBO LINE CREW	HORIZONTAL	883	0	0.6	21.6	17.3	75 °F	64 °F	57 °F	19.3	70 °F	90 °F	TPEFYP024MA143A	67	208	1											
AC-10	CEILING	OFFICE 104	CASETTE	307	0		5.4	4.6	75 °F	64 °F	61 °F	4.8	70 °F	85 °F	TPMFYP006BM140F	31	208	1											
AC-11	CEILING	OFFICE 105	CASETTE	307	0		5.4	4.6	75 °F	64 °F	61 °F	4.8	70 °F	85 °F	TPMFYP006BM140F	31	208	1											
AC-12	WALL	SERVER ROOM	WALL-MOUNTED		0		30.0	30.0	72 °F	60 °F	51 °F	22.8	70 °F	97 °F	PKA-A30KA7.TH	46	208	1	CU-1	19.8	26.6	22.8		VRF	R410A	153	PUZ-A30NHA7	208	1

FAN SCHEDULE

PLAN MARK	MODEL NO.	TYPE	CFM	ESP (IN.WG)	FAN RPM	MOTOR FLA	MOTOR HP	VOLT/ PHASE	DRIVE TYPE	SONES	LOCATION	CONTROLS	WEIGHT (LBS)	ACCESSORIES
EF-1	CSP-A1050	CABINET DIRECT DRIVE	740	0.75	1035	5.0	3/4	115/1	DIRECT	2.5	FLIGHT CREW RESTROOM 121B	INTERLOCK WITH DOAS-1	59	1,5,7,10,12,21
EF-2	AER-E42C-415-B-VGD	PROPELLER BELT DRIVEN	20,000	0.4	1056	16.7	5.0	208/3	DIRECT	52	HANGAR	THERMOSTAT	246	1,2,5,7,10,12,18,19
IF-1	DS-6-24-170HV	24" DIA. HIGH-VOL LOW-SPEED	197,667	-	51	12.0	2.0	208/3	DIRECT	-	HANGAR	MFR VFD CONTROLLER	258	7,25,26

NOTES:
1. MODEL NUMBERS AND FAN SELECTION ARE BASED ON GREENHECK.

ACCESSORIES:

1) BACKDRAFT DAMPER
2) THERMOSTAT
3) BIRDSCREEN
4) ROOF CURB (OR CURB ADAPTOR)
5) DISCONNECT SWITCH
6) DRAIN
7) EQUIPMENT SUPPORTS
8) INLET SCREEN
9) GREASE TRAP
10) SPEED CONTROLLER
11) WALL SHUTTER
12) VIBRATION ISOLATORS
13) WALL CAP
14) WALL SHUTTER - MOTORIZED
15) WEATHER COVER
16) 2 SPEED / 1 WINDING
17) FILTERS
18) WALL COLLAR
19) FAN GUARD/SCREEN
20) COMPANION FLANGES
21) INSULATED HOUSING FOR SOUND CONTROL
22) HINGED BASE
23) SPARK/EXPLOSION PROOF
24) UL 762 LISTED
25) NEMA 3R DISCONNECT SWITCH
26) VARIABLE FREQUENCY DRIVE

ELECTRIC UNIT HEATER SCHEDULE

TAG	MFR.	MODEL	CAP. KW	TEMP RISE (°F)	ELECTRICAL DATA VOLTS	□	Hz	AMPS	MOTOR HP	MOTOR RPM	AIRFLOW CFM	AIRFLOW THROW	WEIGHT LBS	REMARKS
EUH-1	QMARK	IUH1024	10	63	208	3	60	25.7	1/10	1550	500	20'	60	1,2,3
EUH-2	QMARK	IUH1024	10	63	208	3	60	25.7	1/10	1550	500	20'	60	1,2,3
EUH-3	QMARK	IUH1024	10	63	208	3	60	25.7	1/10	1550	500	20'	60	1,2,3
EUH-4	QMARK	IUH1024	10	63	208	3	60	25.7	1/10	1550	500	20'	60	1,2,3
EUH-5	QMARK	IUH1024	10	63	208	3	60	25.7	1/10	1550	500	20'	60	1,2,3
EUH-6	QMARK	IUH1024	10	63	208	3	60	25.7	1/10	1550	500	20'	60	1,2,3
EUH-7	QMARK	IUH1024	10	63	208	1	60	25.7	1/10	1550	500	20'	60	1,2,3
EUH-8	QMARK	IUH1024	10	63	208	1	60	25.7	1/10	1550	500	20'	60	1,2,3

REMARKS:
1. PROVIDE WALL MOUNTING KIT. EUH SHALL BE MOUNTED 10'-0" ABOVE UPPER SURFACE OF WINGS OR ENGINE ENCLOSURE OF DESIGN AIRCRAFT.
2. PROVIDE LINE VOLTAGE THERMOSTAT AND SUMMER/WINTER BUILT-IN FAN SWITCH. FURNISH STEP-DOWN TRANSFORMER AS NECESSARY.
3. PROVIDE 30 DEG DOWN NOZZLE WITH HORIZONTAL ADJUSTABLE BLADES.

INDOOR DX DOAS FAN COIL UNIT SCHEDULE

PLAN MARK	MODEL NUMBER	COND. UNIT PLAN MARK	TOTAL OUTSIDE AIR (CFM)	EXT. S.P. (IN. WC)	COOLING CAPACITY TOT. MBH	SENS. MBH	ENT DB (°F)	ENT DB (°F)	LVG DB (°F)	LVG WB (°F)	HEATING CAPACITY MAX MBH AT 47°F	AUX ELEC. HTNG COIL KW / STEPS	EAT (°F)	TEMP. RISE (°F)	HOT GAS REHEAT COIL / TYPE	ELECTRICAL DATA FAN HP	FAN FLA	MCA	MOCP	VOLT/ PHASE	UNIT WEIGHT
DOAS-1	TWE090E3	HP-2	1,010	1.0	92.3	33.7	82	78.6	52.7	52.7	78.6	13 / 1	29.0	41.0	YES / MOD.	1.5	5.3	86	90	208/1	360

NOTES:
1. BASIS OF DESIGN: TRANE MORGANIZER DUAL COMPRESSOR DUAL CIRCUIT.
2. PROVIDE 7-DAY PROGRAMMABLE THERMOSTAT. PROVIDE ELECTRICAL INTERLOCK WITH ASSOCIATED EXHAUST FANS.
3. PROVIDE WITH 2" PLEATED THROWAWAY MERV 13 85% EFFICIENCY FILTER IN COMPLIANCE WITH ASHRAE STANDARD 52.2 - 2012.
4. PROVIDE MODULATING HOT GAS REHEAT COIL FOR DEHUMIDIFICATION AND NEUTRAL SUPPLY AIR TEMPERATURE CONTROL .
5. PROVIDE SINGLE POINT ELECTRICAL CONNECTION. FCU AND AUX ELECTRIC HEAT SHALL BE POWERED FROM A SINGLE SOURCE POWER CIRCUIT.
6. PROVIDE OVERFLOW SWITCH ON CONDENSATE TRAP TO SHUT-OFF UNIT AT HIGH CONDENSATE WATER LEVEL.

OUTDOOR AIR-COOLED HEAT PUMP OR CONDENSING UNIT SCHEDULE

PLAN MARK	MODEL NUMBER	CLNG CAP. MBH	CLNG AMB. TEMP. (°F)	HTNG CAP. MBH	CLNG AMB. TEMP. (°F)	REFR. TYPE	REFR. / CIRCUIT (LBS)	No. OF REFRIG. CIRCUITS	SUC. LINE OD (IN.)	LIQ. LINE OD (IN.)	CLNG EER	HTNG COP	ELECTRICAL DATA NO. COMP.	COMP. RLA (EA.)	NO. FANS	FAN FLA (EA.)	MCA	MOCP	VOLT/ PHASE	WEIGHT (LBS)
HP-2	TWA09043D	90	105	78.6	47	R410A	11.8	2	1-1/8	1/2	12.8	3.3	2	13.1	1	3.1	33	45	208/3	413

NOTES:
1. BASIS OF DESIGN: TRANE ODYSSEY.
2. PROVIDE HAIL GUARD.

LOUVER SCHEDULE

PLAN MARK	FUNCTION	TYPE	MANUFACTURER	MODEL NO.	CFM	SIZE (W"xH"xD")	MIN.REQ'D FREE AREA (SQ.FT.)	PRESSURE DROP (IN.WC.)	ASSOCIATED DAMPER TYPE
L-1	BLDG OA INTAKE	HORIZONTAL THIN-LINE	GREENHECK	ESJ-155	1,060	28"x28"x1.5"	2.2	0.04	MOTORIZED
L-2	BLDG EXHAUST	HORIZONTAL THIN-LINE	GREENHECK	ESU-153	740	24"x10"x1.5"	1.0	0.07	GRAVITY
L-3	HANGAR OA INTAKE	VERTICAL BLADE STATIONARY	GREENHECK	EVH-501D	10,000	44"x90"x5"	15.4	0.07	MOTORIZED
L-4	HANGAR OA INTAKE	VERTICAL BLADE STATIONARY	GREENHECK	EVH-501D	10,000	44"x90"x5"	15.4	0.07	MOTORIZED
L-5	HANGAR EXHAUST	VERTICAL BLADE STATIONARY	GREENHECK	EVH-501D	20,000	144"x56"x5"	31.4	0.07	GRAVITY

NOTES:

1. LOUVERS SHALL BE 5" DEEP EXTRUDED ALUMINUM CONSTRUCTION WITH DRAINABLE HEAD AND EPOXY COATING. PROVIDE EXPANDED FLATTENED BIRD SCREEN IN REMOVABLE FRAME. COLOR SHALL BE SELECTED BY THE ARCHITECT.
2. LOUVERS SHALL MEET AMCA 550 CRITERIA FOR HIGH VELOCITY WIND DRIVEN RAIN AND SHALL HAVE THE MIAMI DADE FLORIDA PRODUCT APPROVAL.
3. CONTRACTOR SHALL PROVIDE WALL SLEEVE AND OTHER APPURTENANCES NECESSARY FOR A COMPLETE OPERATING ASSEMBLY.
4. GRAVITY DAMPERS SHALL BE EXTRUDED ALUMINUM WITH COUNTER BALANCE WEIGHTS. DAMPERS SHALL BE RATED FOR A VELOCITY OF 2,000 FPM AND PRESSURE DIFFERENTIAL OF UP TO 2.5" WC. DAMPERS SHALL BE MOUNTED VERTICALLY FOR HORIZONTAL AIRFLOW. PROVIDE WALL SLEEVE OR FAN HOUSING WITH LENGTH AS REQUIRED TO MAINTAIN THE MANUFACTURER'S REQUIRED CLEARANCE BETWEEN LOUVER, DAMPER AND FAN.
5. PROVIDE SPRING RETURN ACTUATOR FOR MOTORIZED DAMPER WITH TORQUE RATING AND TIMING IN ACCORDANCE WITH LOUVER MANUFACTURER REQUIREMENTS. ACTUATORS SHALL BE 120V/1PH.
6. MOTORIZED OPPOSED BLADE DAMPER SHALL BE FURNISHED AND FACTORY INSTALLED AT THE UNIT OA INTAKE.

DIFFUSERS, REGISTERS AND GRILLES SCHEDULE

1. ALL HVAC DUCTWORK AND EXHAUST FANS SHALL BE SECURELY SUPPORTED FROM THE STRUCTURAL MEMBERS AND NOT FROM THE ACOUSTICAL TILE CEILING.
2. CEILING GRILLES TO BE PROVIDED WITH BORDER FOR SURACE MOUNTING.
3. GRILLES AND REGISTERS TO BE PROVIDED WITH BACK PAN INSULATION.
4. TYPE "E" AND "F" SLOT DIFFUSER FINISH SHALL BE APPROVED BY ARCHITECT.

MARK	TYPE	MAX NC LEVEL	MAX PD (IN. WG.)	SIZE INCHES (FACE/NECK)	MATERIAL	FINISH	MANUFACTURER MODEL NUMBER	REMARKS
A	CEILING SUPPLY GRILLE	20	0.069	SEE PLANS	ALUM.	WHITE	TITUS TMS-AA	PROVIDE O.B.D.
B	CEILING RETURN AND EXHAUST GRILLE	20	0.050	SEE PLANS	ALUM.	WHITE	TITUS 50F	PROVIDE O.B.D.
C	SIDEWALL SUPPLY GRILLE	22	0.064	SEE PLANS	ALUM.	WHITE	TITUS 272FS	PROVIDE O.B.D.
D	SIDEWALL RETURN AND EXHAUST GRILLE	25	0.072	SEE PLANS	ALUM.	WHITE	TITUS 300FS	PROVIDE O.B.D.
E	LINEAR SUPPLY SLOT DIFFUSER	25	0.080	SEE PLANS	ALUM.	PER ARCHITECT	TITUS ML-38	PROVIDE O.B.D.
F	LINEAR RETURN SLOT DIFFUSER	25	0.072	2-SLOT, 1" WIDTH, LENGTH PER PLANS	ALUM.	PER ARCHITECT	TITUS MLR-39	PROVIDE RETURN PLENUM, OMIT PATTERN CONTROLLER
G	SIDEWALL RETURN AND EXHAUST GRILLE	25	0.072	SEE PLANS	ALUM.	WHITE	TITUS 3FS	PROVIDE O.B.D.

DRAFT
NOT FOR CONSTRUCTION

AVCON
TRANSFORMING TODAY'S IDEAS INTO TOMORROW'S REALITY

THIS DOCUMENT CONTAINS PRIVILEGED AND PROPRIETARY INFORMATION, ALL OF WHICH IS EXPRESSLY PROVIDED BY AVCON, INC., FOR USE BY THE INTENDED RECIPIENT, AND FOR A SPECIFIC PURPOSE, WITHOUT THE EXPRESS WRITTEN CONSENT OF AVCON, INC. ANY DISTRIBUTION, REPRODUCTION, OR OTHER USE OF THIS DOCUMENT, IN WHOLE OR IN PART, IS STRICTLY PROHIBITED.

ZEMP PEPPER, P.E.
FL LICENSE NO.:41147
FBPR CERTIFICATE OF AUTHORIZATION NO. 5057

NO.	DATE	REVISION	BY

MECHANICAL SCHEDULES

RELEASE FOR BID

AIRPORT TERMINAL AND HANGAR DEVELOPMENT

PREPARED FOR
DEFUNIAK SPRINGS MUNICIPAL AIRPORT

DESIGNED BY: R. BLANCO
DRAWN BY: R. BLANCO
CHECKED BY: Z. PEPPER
APPROVED BY: Z. PEPPER
PROJECT NO: 2019.028.01
DATE: November 1, 2021

SHEET NUMBER
M-601

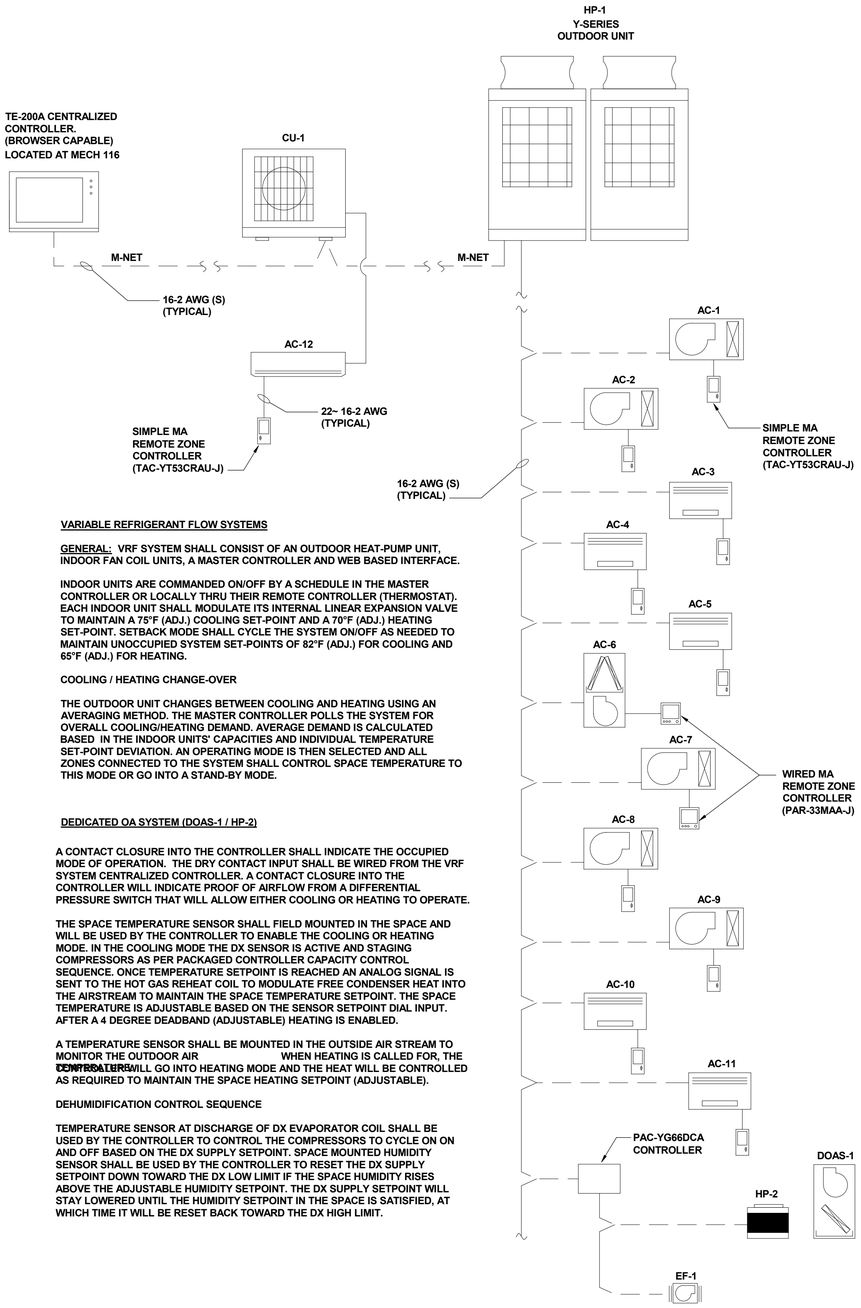

VARIABLE REFRIGERANT FLOW SYSTEMS

GENERAL: VRF SYSTEM SHALL CONSIST OF AN OUTDOOR HEAT-PUMP UNIT, INDOOR FAN COIL UNITS, A MASTER CONTROLLER AND WEB BASED INTERFACE.

INDOOR UNITS ARE COMMANDED ON/OFF BY A SCHEDULE IN THE MASTER CONTROLLER OR LOCALLY THRU THEIR REMOTE CONTROLLER (THERMOSTAT). EACH INDOOR UNIT SHALL MODULATE ITS INTERNAL LINEAR EXPANSION VALVE TO MAINTAIN A 75°F (ADJ.) COOLING SET-POINT AND A 70°F (ADJ.) HEATING SET-POINT. SETBACK MODE SHALL CYCLE THE SYSTEM ON/OFF AS NEEDED TO MAINTAIN UNOCCUPIED SYSTEM SET-POINTS OF 82°F (ADJ.) FOR COOLING AND 65°F (ADJ.) FOR HEATING.

COOLING / HEATING CHANGE-OVER

THE OUTDOOR UNIT CHANGES BETWEEN COOLING AND HEATING USING AN AVERAGING METHOD. THE MASTER CONTROLLER POLLS THE SYSTEM FOR OVERALL COOLING/HEATING DEMAND. AVERAGE DEMAND IS CALCULATED BASED IN THE INDOOR UNITS' CAPACITIES AND INDIVIDUAL TEMPERATURE SET-POINT DEVIATION. AN OPERATING MODE IS THEN SELECTED AND ALL ZONES CONNECTED TO THE SYSTEM SHALL CONTROL SPACE TEMPERATURE TO THIS MODE OR GO INTO A STAND-BY MODE.

DEDICATED OA SYSTEM (DOAS-1 / HP-2)

A CONTACT CLOSURE INTO THE CONTROLLER SHALL INDICATE THE OCCUPIED MODE OF OPERATION. THE DRY CONTACT INPUT SHALL BE WIRED FROM THE VRF SYSTEM CENTRALIZED CONTROLLER. A CONTACT CLOSURE INTO THE CONTROLLER WILL INDICATE PROOF OF AIRFLOW FROM A DIFFERENTIAL PRESSURE SWITCH THAT WILL ALLOW EITHER COOLING OR HEATING TO OPERATE.

THE SPACE TEMPERATURE SENSOR SHALL FIELD MOUNTED IN THE SPACE AND WILL BE USED BY THE CONTROLLER TO ENABLE THE COOLING OR HEATING MODE. IN THE COOLING MODE THE DX SENSOR IS ACTIVE AND STAGING COMPRESSORS AS PER PACKAGED CONTROLLER CAPACITY CONTROL SEQUENCE. ONCE TEMPERATURE SETPOINT IS REACHED AN ANALOG SIGNAL IS SENT TO THE HOT GAS REHEAT COIL TO MODULATE FREE CONDENSER HEAT INTO THE AIRSTREAM TO MAINTAIN THE SPACE TEMPERATURE SETPOINT. THE SPACE TEMPERATURE IS ADJUSTABLE BASED ON THE SENSOR SETPOINT DIAL INPUT. AFTER A 4 DEGREE DEADBAND (ADJUSTABLE) HEATING IS ENABLED.

A TEMPERATURE SENSOR SHALL BE MOUNTED IN THE OUTSIDE AIR STREAM TO MONITOR THE OUTDOOR AIR WHEN HEATING IS CALLED FOR, THE CONTROLLERS WILL GO INTO HEATING MODE AND THE HEAT WILL BE CONTROLLED AS REQUIRED TO MAINTAIN THE SPACE HEATING SETPOINT (ADJUSTABLE).

DEHUMIDIFICATION CONTROL SEQUENCE

TEMPERATURE SENSOR AT DISCHARGE OF DX EVAPORATOR COIL SHALL BE USED BY THE CONTROLLER TO CONTROL THE COMPRESSORS TO CYCLE ON ON AND OFF BASED ON THE DX SUPPLY SETPOINT. SPACE MOUNTED HUMIDITY SENSOR SHALL BE USED BY THE CONTROLLER TO RESET THE DX SUPPLY SETPOINT DOWN TOWARD THE DX LOW LIMIT IF THE SPACE HUMIDITY RISES ABOVE THE ADJUSTABLE HUMIDITY SETPOINT. THE DX SUPPLY SETPOINT WILL STAY LOWERED UNTIL THE HUMIDITY SETPOINT IN THE SPACE IS SATISFIED, AT WHICH TIME IT WILL BE RESET BACK TOWARD THE DX HIGH LIMIT.

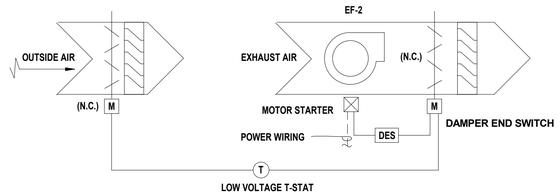

HANGAR VENTILATION SEQUENCE OF OPERATION (EF-2)

1) GENERAL: HANGAR VENTILATION SYSTEM (EXH FAN, OA INTAKE AND EXHAUST MOTORIZED DAMPERS) SHALL BE THERMOSTATICALLY CONTROLLED WHEN ON AUTO OPERATION.

2) UPON A CALL FROM WALL MOUNTED THERMOSTAT, OA LOUVER AND EA FAN MOTORIZED DAMPERS SHALL OPEN. AFTER EA DAMPER HAS BEEN PROVEN OPEN BY END SWITCH, EA FAN SHALL START & RUN CONTINUOUSLY UNTIL SPACE TEMPERATURE SET POINT OF 85°F (ADJ.) IS SATISFIED.

THERMOSTAT SHALL INCLUDE A FAN "ON" OVERRIDE SWITCH TO MANUALLY ACTIVATE VENTILATION SYSTEM.

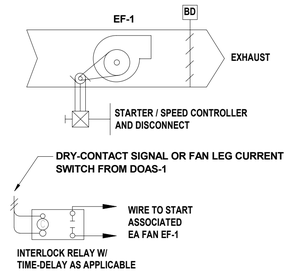

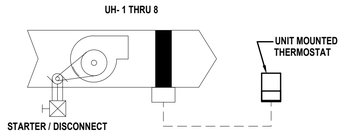

SEQUENCE OF OPERATIONS

GENERAL: THERMOSTATICALLY CONTROLLED HORIZONTAL DISCHARGE HW UNIT HEATER. FAN SHALL ONLY RUN DURING A CALL FOR HEATING.

SEQUENCE:

1) WHEN THE SPACE TEMPERATURE DROPS BELOW 55°F (ADJ.) THE UNIT HEATER ENERGIZES ITS FIRST STAGE HEATING COIL.

2) WHEN SPACE TEMPERATURE RISES ABOVE 65°F, UNIT HEATER SHALL DE-ENERGIZE.

THERMOSTAT SHALL INCLUDE A FAN-ONLY OPERATING MODE.

DRAFT
NOT FOR CONSTRUCTION

AVCON
TRANSFORMING TODAY'S IDEAS INTO TOMORROW'S REALITY

ZEMP PEPPER, P.E.
FL LICENSE NO.:41147
FBPR CERTIFICATE OF AUTHORIZATION NO. 5057

NO.	DATE	REVISION	BY

MECHANICAL CONTROLS

RELEASE FOR BID

AIRPORT TERMINAL AND HANGAR DEVELOPMENT

PREPARED FOR

DEFUNIAK SPRINGS MUNICIPAL AIRPORT

DESIGNED BY:	R. BLANCO
DRAWN BY:	R. BLANCO
CHECKED BY:	Z. PEPPER
APPROVED BY:	Z. PEPPER
PROJECT NO:	2019.028.01
DATE:	November 1, 2021

SHEET NUMBER

M-701

THIS DOCUMENT CONTAINS PRIVILEGED AND PROPRIETARY INFORMATION, ALL OF WHICH IS EXPRESSLY PROVIDED BY AVCON, INC., FOR USE BY THE INTENDED RECIPIENT, AND FOR A SPECIFIC PURPOSE. WITHOUT THE EXPRESS WRITTEN CONSENT OF AVCON, INC., ANY DISTRIBUTION, REPRODUCTION, OR OTHER USE OF THIS DOCUMENT, IN WHOLE OR IN PART, IS STRICTLY PROHIBITED.

GENERAL ELECTRICAL NOTES:

ELECTRICAL NOTES

1. GENERAL ELECTRICAL NOTES LISTED BELOW APPLY TO ALL ELECTRICAL SHEETS, INCLUDING ALL DETAILS, SECTIONS, AND/OR DRAWINGS ISSUED AS ADDENDA TO THESE DRAWINGS.
2. ALL WORK SHALL COMPLY WITH CODES AND STANDARDS LISTED ON THE DRAWINGS AND PER THE SPECIFICATIONS.
3. ALL DEVICES SHALL BE INSTALLED AT MOUNTING HEIGHTS AS OUTLINED IN ADA, UFC 3-600-01, NFPA AND SHALL BE LISTED BY THE UNDERWRITERS LABORATORIES, INC. (UL) OR NATIONAL ELECTRICAL MANUFACTURER'S ASSOCIATION (NEMA).
4. DO NOT SCALE FROM THESE DRAWINGS. REFER TO ARCHITECTURAL PLANS FOR DIMENSIONS.
5. THE DRAWINGS ARE DIAGRAMMATIC AND THE OMISSION OF AN ITEM NECESSARY FOR THE PROPER FUNCTIONING OF THE SYSTEM DOES NOT RELIEVE THE CONTRACTOR FROM FURNISHING AND INSTALLING THAT ITEM.
6. THE SUBMISSION OF A BID OR PROPOSAL WILL BE CONSTRUED AS EVIDENCE THAT THE CONTRACTOR HAS FAMILIARIZED THEMSELVES WITH THE PLANS, SPECIFICATIONS, AND BUILDING SITE. CLAIMS MADE SUBSEQUENT TO THE PROPOSAL FOR MATERIALS AND/OR LABOR DUE TO DIFFICULTIES ENCOUNTERED WILL NOT BE RECOGNIZED, UNLESS DIFFICULTIES COULD NOT HAVE BEEN FORESEEN EVEN THOUGH PROPER EXAMINATION HAD BEEN MADE.
7. IN THE EVENT OF CONTRADICTIONS, ON THESE PLANS FROM SHEET TO SHEET (ELECTRICAL, MECHANICAL, ARCHITECTURAL, CIVIL AND/OR STRUCTURAL), THE CONTRACTOR SHALL INCLUDE IN THEIR BID THE COST OF THE MOST RESTRICTIVE (COSTLY) ACTION SPECIFIED. ALL DISCREPANCIES SHALL BE BROUGHT TO THE ARCHITECT'S AND ENGINEER'S ATTENTION PRIOR TO THE PRE-CONSTRUCTION MEETING FOR CLARIFICATION OF THE WORK TO BE PERFORMED. ANY COSTS GENERATED AS A RESULT OF FAILURE TO IDENTIFY THESE DISCREPANCIES SHALL BE THE RESPONSIBILITY OF THE CONTRACTOR.
8. PRIOR TO BID, COORDINATE ALL ELECTRICAL WORK WITH MECHANICAL WORK. COORDINATE ALL MECHANICAL LOADS, VOLTAGES AND LOCATIONS WITH THE MECHANICAL CONTRACTOR AND MAKE NECESSARY ADJUSTMENTS WITHOUT EXTRA CHARGES.
9. SHOULD ANY QUESTIONS AND/OR DISCREPANCIES ARISE REGARDING THE CONTRACT DOCUMENTS AND/OR FIELD CONDITIONS, THE CONTRACTOR SHALL CONTACT THE ARCHITECT/ENGINEER FOR PROPER INTERPRETATION AND/OR CLARIFICATION PRIOR TO THE COMMENCEMENT OF ANY WORK. IN THE ABSENCE OF SUCH REQUEST AND/OR AUTHORIZATION FROM THE ARCHITECT /ENGINEER, THE CONTRACTOR WILL BE PROCEEDING AT HIS OWN RISK.
10. THE ELECTRICAL CONTRACTOR SHALL NOT CONCEAL ANY WORK UNTIL INSPECTED AND APPROVED BY ELECTRICAL INSPECTOR AND/OR ARCHITECT/ENGINEER. THE CONTRACTOR SHALL NOTIFY ARCHITECT/ENGINEER OF A SCHEDULED INSPECTION TIME WITHIN 72 HOURS.
11. WHERE CROWDED LOCATIONS EXIST OR WHERE THERE IS A POSSIBILITY OF CONFLICT BETWEEN TRADES, THE CONTRACTOR SHALL MAKE COMPOSITE DRAWINGS SHOWING THE EXACT LOCATION OF DUCTS, CONDUIT, AND EQUIPMENT. DRAWINGS SHALL BE BASED ON FIELD MEASUREMENTS AND, AFTER CONSULTATION AND AGREEMENT BETWEEN THE TRADES, SHALL BE APPROVED BY THE ARCHITECT AND ENGINEER BEFORE INSTALLATION OF THE WORK.
12. FOR SPACES WITH INACCESSIBLE HARD CEILINGS OR PLUMBING CHASES, PROVIDE 30" x 30" HINGED ACCESS PANELS AS REQUIRED FOR ELECTRICAL EQUIPMENT ACCESS OR CLEARANCE.
13. THE ELECTRICAL CONTRACTOR IS TO PROVIDE PULL STRINGS IN ALL EMPTY CONDUIT AND RACEWAYS WITH LABELING TAGS AT EACH END.
14. ALL BARE METAL SURFACES SHALL BE PRIMED AND PAINTED TO PREVENT ANY RUST, INCLUDING BUT NOT LIMITED TO ANGLE FRAMING, EQUIPMENT SUPPORTS, MOUNTING HARDWARE, ETC.
15. ALL MATERIALS AND EQUIPMENT INSTALLED IN RETURN AIR PLENUMS SHALL BE NON-COMBUSTIBLE AND UL LABELED AND LISTED FOR THE APPLICATION. ALL WIRING SHALL BE PLENUM RATED OR ENCLOSED IN A METAL RACEWAY.
16. COORDINATE LIGHTING, SWITCHING, AND RECEPTACLE LOCATIONS IN MECHANICAL SPACES WITH RESPECT TO ACTUAL MECHANICAL EQUIPMENT INSTALLATION FOR OPTIMUM LIGHTING AND UTILIZATION OF RECEPTACLES.
17. SURGE PROTECTION SHALL BE PROVIDED ON ALL CABLES ENTERING/ EXITING BUILDINGS THAT CONNECT TO ELECTRICAL EQUIPMENT.
18. CONDUCTORS: FEEDER AND BRANCH CIRCUIT CONDUCTORS SHALL BE THWN-2 COPPER (MINIMUM SIZE #12 UNLESS OTHERWISE NOTED). NO ALUMINUM SHALL BE PERMITTED UNLESS SPECIFICALLY NOTED OTHERWISE. INSTALL ALL WIRING IN CONDUIT OR APPROVED RACEWAYS UNLESS OTHERWISE INDICATED. ALL RACEWAYS SHALL HAVE A GREEN GROUNDING CONDUCTOR. CONDUCTORS UP-SIZED FOR THE PURPOSE OF MITIGATING VOLTAGE DROP SHALL BE INCLUDED IN THE ELECTRICAL CONTRACTOR'S BID PRICE AND VOLTAGE DROP CALCULATIONS SHALL BE PREFORMED IN ACCORDANCE WITH NFPA 70. ALL BRANCH CIRCUITS SHALL CARRY A GROUNDING EQUIPMENT CONDUCTOR, AND BE WIRED WITH COLOR-CODED WIRE WITH THE SAME COLOR USED FOR A PHASE THROUGHOUT. COLOR-CODE SHALL BE AS FOLLOWS:
    18.1. 120/208 VOLT: PHASE A - BLACK; PHASE B - RED; PHASE C - BLUE; NEUTRAL - WHITE; GROUND - GREEN.
19. RACEWAYS AND FITTINGS: ALL RACEWAYS AND FITTINGS SHALL BE GALVANIZED RIGID STEEL OR INTERMEDIATE METAL CONDUIT WITH LOCKNUTS AND BUSHINGS, WITH THE EXCEPTION THAT WHERE SPECIFICALLY ALLOWED BY THE NATIONAL ELECTRICAL CODE AND APPLICABLE LOCAL CODES. ELECTRICAL METALLIC TUBING (E.M.T) MAY BE USED FOR ALL INTERIOR EXPOSED AND CONCEALED WORK WHERE IT IS NOT SUBJECT TO PHYSICAL DAMAGE OR CORROSION. FITTINGS SHALL BE STEEL SET SCREW TYPE. NO BX CABLE ALLOWED. EXPOSED CONDUIT IS NOT PERMITTED IN FINISHED OFFICE AREAS. INSTALL EXPANSION FITTINGS IN RACEWAYS EVERY 200' LINEAR RUN OR WHEREVER STRUCTURAL EXPANSION JOINTS ARE CROSSED.

ELECTRICAL NOTES, CONT.

20. MANUFACTURERS: BASE OF DESIGN IS SQUARE D, EQUAL PRODUCTS BY GENERAL ELECTRIC, SIEMENS OR CUTLER HAMMER WILL BE CONSIDERED. ALL ELECTRICAL PANELS, CABINETS, DISCONNECT SWITCHES, AND ENCLOSED STARTERS SHALL BE NEMA 1 IF INSTALLED IN AN INTERIOR LOCATION AND NEMA 4X STAINLESS STEEL IF INSTALLED IN A EXTERIOR LOCATION.
21. MATERIALS SHALL BE NEW AND UNUSED AND THE CATALOGUED PRODUCTS OF MANUFACTURERS REGULARLY ENGAGED IN THE PRODUCTION OF SUCH MATERIALS. THE MATERIALS SHALL BE OF THE MANUFACTURER'S LATEST STANDARD DESIGN THAT COMPLIES WITH THE SPECIFICATION REQUIREMENTS.
22. ALL GROUNDING SHALL CONFORM TO ARTICLE 250 OF THE NEC REQUIREMENTS. IN ADDITION THERETO AS IMPOSED BY THE DRAWINGS AND THE LOCAL CODE ENFORCEMENT AUTHORITIES HAVING JURISDICTION.
23. FIREPROOF ALL OPENINGS ON FIRE RATED WALLS BY AN UL APPROVED SYSTEM.
24. CONDUIT PENETRATIONS THROUGH FIRE RATED PARTITIONS SHALL BE SEALED USING APPROVED FIRE SAVING COMPOUND. REFER TO EXISTING ARCHITECTURAL FLOOR PLAN FOR LOCATION OF FIRE RATED PARTITIONS.
25. REVIEW AND COORDINATE WITH DIV. 23 DRAWINGS FOR EQUIPMENT, CONDUIT, DEVICES, ETC. REQUIRED FOR A COMPLETE AND OPERATING HVAC SYSTEM. LOW VOLTAGE CONTROL WIRING FURNISHED AND INSTALLED BY DIVISION 23. CHECK ALL MOTORS AND ROTATING EQUIPMENT FOR PROPER ROTATION.
26. ELECTRICAL CONTRACTOR SHALL INCLUDE CUTTING AND PATCHING FOR THE INSTALLATION OF HIS/HER WORK WITHIN BASE BID.
27. PROVIDE REDLINED "AS BUILT" ELECTRICAL DRAWINGS AT THE COMPLETION OF THE PROJECT.
28. CONTRACTOR REPRESENTS THAT HIS BID IS BASED UPON THE MANUFACTURER'S MATERIALS AND EQUIPMENT DESCRIBED IN THE CONTRACT DOCUMENTS.
29. ELECTRICAL CONTRACTOR SHALL FILE BUILDING DEPARTMENT ELECTRICAL PERMIT FORMS.
30. ALL ELECTRICAL BOXES INSTALLED IN 1 HOUR RATED BARRIER AND 2 HOUR SHAFT WALLS ARE REQUIRED TO HAVE THE SAME FIRE RATING AS THE WALLS, HAVE SIZE AND SPACING AS PER NEC.
31. ALL EQUIPMENT SHOWN IS TO BE PROVIDED AND INSTALLED BY THE CONTRACTOR UNLESS NOTED OTHERWISE.
32. ELECTRICAL EQUIPMENT BASIS OF DESIGN IS AS NOTED ON PLANS. ACCEPTABLE EQUIVALENT EQUIPMENT MAY BE SUBMITTED FOR REVIEW.
33. ALL FIRE ALARM DEVICES, RECEPTACLE, TELEPHONE AND DATA JACK COVERS SHALL BE WHITE.
34. THIS DRAWING IS DIAGRAMMATIC IN NATURE AND DEPICTS THE GENERAL ARCHITECTURE, ARRANGEMENT AND CONNECTIVITY OF THE LOCAL AREA NETWORK DEVICES. REFER TO FLOOR PLANS FOR EXACT QUANTITIES AND APPROXIMATE PHYSICAL LOCATIONS OF DEVICES.

STANDARDS AND REGULATORY REQUIREMENTS

CONFORM TO ALL THE APPLICABLE REQUIREMENTS OF THE FOLLOWING CODE, STANDARDS, GUIDELINES, ETC. IF THERE SHOULD BE CONFLICTING REQUIREMENTS BETWEEN THESE CODES, STANDARDS, GUIDELINES, ETC., THE MORE OR MOST STRINGENT REQUIREMENT SHALL APPLY THAT DOES NOT VIOLATE ANY CODES OR LAWS.

a. NATIONAL ELECTRIC CODE (NEC), 2017 EDITION [NFPA 70]
b. NATIONAL FIRE ALARM CODE, 2016 EDITION [NFPA 72]
c. LIFE SAFETY CODE, 2018 EDITION [NFPA 101]
d. STANDARD FOR EMERGENCY AND STANDBY POWER SYSTEMS, 2016 EDITION [NFPA 110]
e. NFPA 780, 2017 EDITION
f. FLORIDA ENERGY CODE 2020, 7TH EDITION
g. LOCAL GOVERNMENT AND FLORIDA BUILDING CODE 2020, 7TH EDITION
h. FLORIDA ACCESSIBILITY CODE 2020, 7TH EDITION

1. THE ABOVE MOUNTING ELEVATIONS ARE TO CENTER OF DEVICE AND SHALL BE ADHERED TO UNLESS SPECIFICALLY NOTED OR DETAILED OTHERWISE ON THE DRAWINGS AND/OR SPECIFICATIONS.
2. COORDINATE THE INSTALLATION AND MOUNTING ELEVATIONS OF ALL EQUIPMENT, DEVICES, CONTROLS AND APPURTENANCES WITH DOA, DESIGN PROFESSIONAL AND ALL AFFECTED TRADES PRIOR TO INSTALLATION. DOCUMENT ALL MOUNTING ELEVATIONS FOR ALL EQUIPMENT, DEVICES, CONTROLS AND APPURTENANCES AT THE TIME OF SHOP DRAWING SUBMITTAL.

ABBREVIATIONS:

A	AMPERES
AFF	ABOVE FINISHED FLOOR
AFG	ABOVE FINISHED GRADE
AL	ALUMINUM
ANNUN	ANNUNCIATOR
ARCH	ARCHITECT
ATS	AUTOMATIC TRANSFER SWITCH
AWG	AMERICAN WIRE GAUGE
B.A.F.	BIG ASS FANS
BFG	BELOW FINISHED GRADE
BFF	BELOW FINISHED FLOOR
BBS	BELOW BOTTOM OF SLAB
BLDG	BUILDING
C	CONDUIT
CAT	CATALOG
C.E.P.	CENTRAL ENERGY PLANT
CKT	CIRCUIT
CU	COPPER
C/B	CIRCUIT BREAKER
C/T	CURRENT TRANSFORMERS
DIA	DIAMETER
DWG	DRAWING
DVP	DIVERTER VALVE PANEL
FOTC	FIBER OPTIC TERMINATION CABINET
FLA	FULL LOAD AMPS
FT	FEET
GND	GROUND
GEN	GENERATOR
GF	GROUND FAULT INTERRUPT
HPP	480Y/277V LIGHTING BRANCH PANEL
HLP	480Y/277V EQUIPMENT BRANCH PANEL
IG	ISOLATED GROUND
KVA	KILOVOLT - AMPERES
KW	KILOWATTS
LCP	LIGHTING CONTROL PANEL
LDP	208Y/120V DISTRIBUTION PANEL
LLP	208Y/120V LIGHTING PANEL
LPP	208Y/120V EQUIP POWER PANEL
LSIA	LONG, SHORT, INSTANTANEOUS FAULT ALARM
LSIG	LONG, SHORT, INSTANTANEOUS GROUND FAULT
MCB	MAIN CIRCUIT BREAKER
MCC	MOTOR CONTROL CENTER
MCM	THOUSAND CIRCULAR MILS
MISC	MISCELLANEOUS
MLO	MAIN LUGS ONLY
MDP	MAIN DISTRIBUTION PANEL
MECH	MECHANICAL
NC	NORMALLY CLOSED
NEC	NATIONAL ELECTRICAL CODE
NF	NON-FUSED
NIC	NOT IN CONTRACT
NO	NORMALLY OPEN
NTS	NOT TO SCALE
OSP	OIL/WATER SEPARATOR PANEL
PVC	POLYVINYL CHLORIDE
P/T	POTENTIAL TRANSFORMER
PC	PHOTO CELL
R	RECESSED
RECP.	RECEPTACLE
SCR	SHORT CIRCUIT RATING
SPD	SURGE PROTECTION DEVICE
SURF	SURFACE
TEL	TELEPHONE
TEMP	TEMPERATURE
UG	UNDERGROUND
UNIV	UNIVERSAL
UNO	UNLESS NOTED OTHERWISE
UPS	UNINTERRUPTED POWER SUPPLY
V	VOLTS
W	WATTS
WP	WEATHERPROOF ENCLOSURE
GF/WP	WEATHERPROOF WITH GROUND FAULT INTERRUPT
XFMR	TRANSFORMER
Y	WYE
Δ	DELTA
ϕ	PHASE

TYP. MOUNTING HEIGHTS

CEILING	SMOKE AND HEAT DETECTORS, 360° SECURITY MOTION DETECTORS, CCTV SURVEILLANCE CAMERAS, PUBLIC ADDRESS AND VOICE EVACUATION SPEAKERS, WIRELESS ACCESS POINTS.
8'-0" A.F.F.	EXTERIOR VISUAL AND AUDIO/VISUAL FIRE ALARM NOTIFICATION DEVICES, EXTERIOR PUBLIC ADDRESS SPEAKERS.
7'-6" A.F.F.	CLOCKS, COMBINATION CLOCK/SPEAKERS, TRUMPET SPEAKERS
6" ABOVE DOOR JAMB	REQUEST TO EXIT MOTION DETECTORS
7'-0" A.F.F.	VISUAL AND AUDIO/VISUAL FIRE ALARM NOTIFICATION DEVICES, WALL MOUNTED SECURITY MOTION DETECTORS (CENTER OF DEVICE)
5'-6" A.F.F.	TOP OF PLYWOOD TELEPHONE BACKBOARD
5'-4" A.F.F.	FIRE ALARM ANNUNCIATOR PANELS, FIRE FIGHTER CONTROL STATIONS, SECURITY ANNUNCIATOR PANELS
4'-8" A.F.F. MAX	PEDESTAL MOUNT INTERCOM PEDESTAL MOUNT CARD READER
4'-0" A.F.F.	(WALL MOUNTED)-TELEPHONE INSTRUMENTS, INTERCOM STATIONS, FIRE FIGHTER TELEPHONE JACKS, FIRE ALARM MANUAL STATIONS
1'-6" A.F.F.	DATA/TELEPHONE JACKS, LOW TELEVISION JACKS, MICROPHONE JACKS
0'-0" A.F.F.	IN FLOOR JUNCTION BOXES

FOR PERMIT & BIDDING ONLY

AVCON
TRANSFORMING TODAY'S IDEAS INTO TOMORROW'S REALITY

RICHARD CREAVALLE, P.E.
FL LICENSE NO.:59885
FBPR CERTIFICATE OF AUTHORIZATION NO. 5057

NO.	DATE	REVISION	BY

GENERAL ELECTRICAL NOTES

RELEASE FOR BID

AIRPORT TERMINAL AND HANGAR DEVELOPMENT

PREPARED FOR

DEFUNIAK SPRINGS MUNICIPAL AIRPORT

DESIGNED BY:	FB
DRAWN BY:	FB
CHECKED BY:	KB
APPROVED BY:	RC
PROJECT NO:	2019.028.01
DATE:	November 1, 2021

SHEET NUMBER

E-001

THIS DOCUMENT CONTAINS PRIVILEGED AND PROPRIETARY INFORMATION, ALL OF WHICH IS EXPRESSLY PROVIDED BY AVCON, INC., FOR USE BY THE INTENDED RECIPIENT, AND FOR A SPECIFIC PURPOSE. WITHOUT THE EXPRESS WRITTEN CONSENT OF AVCON, INC. ANY DISTRIBUTION, REPRODUCTION, OR OTHER USE OF THIS DOCUMENT, IN WHOLE OR IN PART, IS STRICTLY PROHIBITED.

LEGEND NOTE: THESE ARE STANDARD SYMBOLS AND ALL MAY NOT APPEAR IN THIS PROJECT DRAWING SET. REFER TO ELECTRICAL GENERAL NOTES FOR ABBREVIATION LIST AND SPECIFICATIONS FOR MOUNTING HEIGHTS

ELECTRICAL SYMBOL LEGEND

POWER DISTRIBUTION EQUIPMENT

- MAIN SERVICE DISTRIBUTION SWITCHGEAR, SEE RISER DIAGRAM AND PANEL SCHEDULE FOR DETAILS
- MAIN / BRANCH DISTRIBUTION PANELBOARD, SEE RISER DIAGRAM AND PANEL SCHEDULE FOR DETAILS
- 480Y/277V, 3Φ, 4W BRANCH PANELBOARD, SEE RISER DIAGRAM AND PANEL SCHEDULE FOR DETAILS
- 208Y/120V, 3Φ, 4W BRANCH PANELBOARD, SEE RISER DIAGRAM AND PANEL SCHEDULE FOR DETAILS
- 240/120V, 1Φ, 3W BRANCH PANELBOARD, SEE RISER DIAGRAM AND PANEL SCHEDULE FOR DETAILS
- ATS (GFM) - ATS - AUTOMATIC TRANSFER SWITCH, SEE RISER DIAGRAM AND PANEL SCHEDULE FOR DETAILS
- MBS (GFM) - MBS - MAINTENANCE BY-PASS SWITCH, SEE RISER DIAGRAM AND PANEL SCHEDULE FOR DETAILS
- DRY-TYPE TRANSFORMER MOUNTED TO 4" CONCRETE HOUSEKEEPING PAD UNLESS OTHERWISE NOTED, SEE RISER DIAGRAM AND PANEL SCHEDULE FOR DETAILS
- M - UTILITY METER BASE, SEE RISER DIAGRAM FOR DETAILS
- ST - EMERGENCY SHUNT TRIP, MOUNTED 84" AFF FOR OUTDOOR USE AND 48" AFF FOR INDOOR USE UNLESS OTHERWISE NOTED, SEE RISER DIAGRAM FOR DETAILS
- SPD - SURGE PROTECTION DEVICE, SEE RISER DIAGRAM FOR LOCATIONS AND SEE SPECIFICATIONS FOR DETAIL INFORMATION
- MH - TRAFFIC RATED PRE-FORMED MAN HOLE OR APPROVED EQUAL
- PB - 24"x24" ELECTRICAL PULL BOX OR APPROVED EQUAL, UNLESS OTHERWISE NOTED
- HH - 12"x12" ELECTRICAL HAND-HOLE OR APPROVED EQUAL, UNLESS OTHERWISE NOTED
- WW - ELECTRICAL WIRE WAY, CONTRACTOR TO SIZE ACCORDING TO NEC CODE, UNLESS OTHERWISE NOTED. SEE ELECTRICAL SPECIFICATIONS FOR DETAIL INFORMATION AND TYPE
- MSGB - MSGB - MAIN SERVICE ELECTRICAL GROUND BAR

MECH. POWER EQUIPMENT

- ELECTRIC PUMP MOTOR, ID MARK WILL CORRESPOND WITH PLUMBING SCHEDULE FOR SIZE AND ELECTRICAL DATA
- ELECTRIC HVAC MOTOR, ID MARK WILL CORRESPOND WITH MECHANICAL SCHEDULE FOR SIZE AND ELECTRICAL DATA
- IWH - INSTANTANEOUS ELECTRIC WATER HEATER, SEE PLUMBING SCHEDULE FOR SIZE AND ELECTRICAL DATA
- WH - ELECTRIC HOT WATER HEATER, SEE PLUMBING SCHEDULE FOR SIZE AND ELECTRICAL DATA
- RE-CIRCULATION PUMP, SEE PLUMBING SCHEDULE FOR SIZE AND ELECTRICAL DATA
- AF - 6V FLUSH VALVE TRANSFORMER
- AS - 6V FLUSH VALVE TRANSFORMER

CONDUIT AND WIRE

- C — ABOVE GROUND RIGID METAL CONDUIT UNLESS NOTED OTHERWISE
- C - - - BURIED SCHD 40 PVC CONDUIT, UNLESS NOTED OTHERWISE
- ELECTRICAL CONDUCTOR HOME RUN. STANDARD CONDUCTOR SIZE IS 20A, 75° RATED, #12AWG THHN WIRE UNLESS OTHERWISE NOTED. SEE RISER DIAGRAM AND FEEDER SCHEDULES FOR CONDUCTOR SIZE, NUMBER OF CONDUCTORS, GROUND WIRE SIZE, CONDUIT SIZE AND VOLTAGE DROP,
- ABOVE GROUND CONDUCTOR OR GROUND CABLE, UNLESS NOTED OTHERWISE
- BELOW GROUND CONDUCTOR OR GROUND CABLE, UNLESS NOTED OTHERWISE
- GROUND CONNECTION OR GROUND CONNECTOR
- F - BURIED FIBER OPTIC CABLE, UNLESS NOTED OTHERWISE
- CAT 6 — 8 STRAND CAT 6 WIRE, UNLESS NOTED OTHERWISE

POWER EQUIPMENT

- J - FLOOR / WALL MOUNTED JUNCTION BOX, STANDARD SIZE 4"x4" METAL BOX UNLESS NOTED OTHERWISE
- J - CEILING MOUNTED JUNCTION BOX, STANDARD SIZE 4"x4" METAL BOX UNLESS NOTED OTHERWISE
- J - POKE THROUGH JUNCTION BOX, STANDARD SIZE 4" ROUND METAL BOX UNLESS NOTED OTHERWISE
- D - ELECTRIC DRYER JUNCTION BOX FOR CIRCUIT CONNECTION
- EM - ELECTRIC MOTORIZED DOOR JUNCTION BOX FOR CIRCUIT CONNECTION
- ML - ELECTRIC MAGNETIC DOOR LOCK (MAGLOCK) JUNCTION BOX FOR CIRCUIT CONNECTION
- RC - RETRACTABLE CORD
- BX - ELECTRIC BATTERY BOX FOR EMERGENCY BACK-UP
- PB - PUSH BUTTON BACK BOX FOR ELECTRICAL CIRCUIT AND/OR DATA CONNECTION
- DUPLEX RECEPTACLE, STANDARD MOUNTING HEIGHT 18" AFF, UNLESS OTHERWISE NOTED
  - GFI - GROUND FAULT CIRCUIT INTERRUPTER
  - IG - ISOLATED GROUND FAULT RECEPTACLE
  - C - OUTLET CONTROLLED VIA LIGHTING CONTROL PER 2019 FLORIDA ENERGY CODE
  - A - ARC FAULT CIRCUIT INTERRUPTER
  - WP - GROUND FAULT CIRCUIT INTERRUPTER IN WEATHERPROOF BOX w/ COVER
  - REF - DEDICATED REFRIGERATOR RECEPTACLE
  - MW - DEDICATED MICROWAVE GFI RECEPTACLE
  - EWC - DEDICATED ELECTRIC WATER COOLER GFI RECEPTACLE, SEE PLUMBING PLANS FOR LOCATION
  - VM - DEDICATED VENDING MACHINE GFI RECEPTACLE
  - ATM - DEDICATED AUTOMATIC TELLER MACHINE GFI RECEPTACLE
- GFI DUPLEX RECEPTACLE MOUNTED AT COUNTERTOP HEIGHT 42" AFF, UNLESS OTHERWISE NOTED
  - IG - ISOLATED GROUND FAULT RECEPTACLE
  - C - OUTLET CONTROLLED VIA LIGHTING CONTROL PER 2019 FLORIDA ENERGY CODE
  - A - ARC FAULT CIRCUIT INTERRUPTER
  - MW - DEDICATED MICROWAVE RECEPTACLE
- QUADRUPLEX RECEPTACLE, STANDARD MOUNTING HEIGHT 18" AFF, UNLESS OTHERWISE NOTED
  - GFI - GROUND FAULT CIRCUIT INTERRUPTER
  - IG - ISOLATED GROUND FAULT RECEPTACLE
  - EWC - DEDICATED ELECTRIC WATER COOLER GFI RECEPTACLE, SEE PLUMBING PLANS FOR LOCATION
- COUNTERTOP HEIGHT QUADRUPLEX RECEPTACLE, STANDARD MOUNTING HEIGHT 42" AFF, UNLESS OTHERWISE NOTED
  - GFI - GROUND FAULT CIRCUIT INTERRUPTER
  - IG - ISOLATED GROUND FAULT RECEPTACLE
- SIMPLEX RECEPTACLE, STANDARD MOUNTING HEIGHT 18" AFF, UNLESS OTHERWISE NOTED
  - WSH - DEDICATED WASHING MACHINE RECEPTACLE
  - REF - DEDICATED REFRIGERATOR RECEPTACLE
  - MW - DEDICATED MICROWAVE GFI RECEPTACLE
  - EWC - DEDICATED ELECTRIC WATER COOLER GFI RECEPTACLE, SEE PLUMBING PLANS FOR LOCATION
- DUPLEX RECEPTACLE FLUSH MOUNTED IN FLOOR, METAL BOX w/ COVER UNLESS OTHERWISE NOTED
- DUPLEX RECEPTACLE FLUSH MOUNTED TO UNDERSIDE OF CABLE TRAY, METAL BOX w/ COVER UNLESS OTHERWISE NOTED
- 208V / 230V 2 POLE DEDICATED DRYER SIMPLEX OUTLET MOUNTED AT 48", UNLESS OTHERWISE NOTED
- 208V / 230V 2 POLE DEDICATED DRYER SIMPLEX OUTLET MOUNTED AT 48", UNLESS OTHERWISE NOTED
- 480V, 3 PHASE, 4 WIRE DEDICATED SPECIALTY OUTLET MOUNTED AT 48", UNLESS OTHERWISE NOTED

COMBINATION ELEC EQUIPMENT

- TV - TV WALL BOX COMBINATION DUPLEX RECEPTACLE / DATA/CABLE/HDMI OUTLET MOUNTED AT 60", UNLESS OTHERWISE NOTED
- FIDS - FIDS WALL BOX COMBINATION DUPLEX RECEPTACLE / DATA OR HDMI OUTLET MOUNTED AT 72", UNLESS OTHERWISE NOTED
- COMBINATION DUPLEX RECEPTACLE / DATA OUTLET FLUSH MOUNTED IN FLOOR, METAL BOX w/ COVER UNLESS OTHERWISE NOTED
- COMBINATION DUPLEX RECEPTACLE / VOICE/DATA OUTLET FLUSH MOUNTED IN FLOOR, METAL BOX w/ COVER UNLESS OTHERWISE NOTED
- COMBINATION DUPLEX RECEPTACLE / VOICE OUTLET FLUSH MOUNTED IN FLOOR, METAL BOX w/ COVER UNLESS OTHERWISE NOTED

POWER EQUIPMENT, CONT.

- ELECTRIC MOTOR, * DENOTES TYPE OF MOTOR
  - G - GENERATOR MOTOR
  - E - ELEVATOR MOTOR
  - M - GENERAL ELECTRIC MOTOR
- $_M - 20A MOTOR RATED TOGGLE SAFETY SWITCH OR APPROVED EQUAL, UNLESS OTHERWISE NOTED
- NON FUSED HEAVY DUTY SAFETY SWITCH (SIZE AND NO. OF POLES ARE INDICATED)
  - 30/3 4X — SAFETY SWITCH SIZE / NUMBER OF POLES
  - NF — NF (NON FUSED)
  - 4X — SAFETY SWITCH ENCLOSURE NEMA RATING
- FUSED HEAVY DUTY SAFETY SWITCH (SIZE, NO. OF POLES AND FUSE SIZE ARE INDICATED)
  - 30/3 4X — SAFETY SWITCH SIZE / NUMBER OF POLES
  - 30A — FUSE SIZE (AMPS)
  - 4X — SAFETY SWITCH ENCLOSURE NEMA RATING
- COMBINATION MAGNETIC STARTER / FUSED HEAVY DUTY SAFETY SWITCH
  - 00 30/3 4X — SAFETY SWITCH SIZE / NUMBER OF POLES
  - 30A — FUSE SIZE (AMPS)
  - 4X — SAFETY SWITCH ENCLOSURE NEMA RATING
  - NEMA STARTER SIZE
- COMBINATION MAGNETIC STARTER / ENCLOSED CIRCUIT BREAKER
  - 00 / 30A / 4X — SAFETY SWITCH ENCLOSURE NEMA RATING
  - CIRCUIT BREAKER SIZE
  - NEMA STARTER SIZE
- ENCLOSED CIRCUIT BREAKER
  - 30A 4X — CIRCUIT BREAKER SIZE
  - CIRCUIT BREAKER ENCLOSURE NEMA RATING
- VFD - VFD (VARIABLE FREQUENCY DRIVE) STARTER / DISCONNECT, SEE MECHANICAL SCHEDULE FOR MOTOR SIZE AND ELECTRICAL DATA
  - VFD 10 HP, 4X — UNIT MOTOR SIZE, SEE MECHANICAL SCHEDULE FOR MOTOR SIZE
  - 4X — VFD ENCLOSURE NEMA RATING

LIGHTING EQUIPMENT

- LED EXIT LIGHT, SINGLE FACE, ARROWS SHOWN ON FLOOR PLAN FOR DIRECTION OF EXIT. SEE LIGHTING FIXTURE SCHEDULE FOR MANUFACTURER, ELECTRICAL DATA AND MOUNTING TYPE
- LED EXIT LIGHT, DUAL FACE, ARROWS SHOWN ON FLOOR PLAN FOR DIRECTION OF EXIT. SEE LIGHTING FIXTURE SCHEDULE FOR MANUFACTURER, ELECTRICAL DATA AND MOUNTING TYPE
- INDUSTRIAL 1x4 LED FIXTURE w/ DEFLECTOR. SEE LIGHTING FIXTURE SCHEDULE FOR MANUFACTURER, ELECTRICAL DATA AND MOUNTING TYPE
- INDUSTRIAL 1x4 LED STRIP LIGHT. SEE LIGHTING FIXTURE SCHEDULE FOR MANUFACTURER, ELECTRICAL DATA AND MOUNTING TYPE
- VAPOR TIGHT 1x4 LED LIGHT. SEE LIGHTING FIXTURE SCHEDULE FOR MANUFACTURER, ELECTRICAL DATA AND MOUNTING TYPE
- 2x2 LED FLAT PANEL FIXTURE. SEE LIGHTING FIXTURE SCHEDULE FOR MANUFACTURER, ELECTRICAL DATA AND MOUNTING TYPE
- 2x2 LED DECORATIVE FIXTURE. SEE LIGHTING FIXTURE SCHEDULE FOR MANUFACTURER, ELECTRICAL DATA AND MOUNTING TYPE
- 2x2 LED FIXTURE w/ LOUVER. SEE LIGHTING FIXTURE SCHEDULE FOR MANUFACTURER, ELECTRICAL DATA AND MOUNTING TYPE
- 2x4 LED FLAT PANEL FIXTURE. SEE LIGHTING FIXTURE SCHEDULE FOR MANUFACTURER, ELECTRICAL DATA AND MOUNTING TYPE
- 2x4 LED DECORATIVE FIXTURE. SEE LIGHTING FIXTURE SCHEDULE FOR MANUFACTURER, ELECTRICAL DATA AND MOUNTING TYPE
- 2x4 LED FIXTURE w/ LOUVER. SEE LIGHTING FIXTURE SCHEDULE FOR MANUFACTURER, ELECTRICAL DATA AND MOUNTING TYPE
- SURFACE MOUNT ROUND LIGHT. SEE LIGHTING FIXTURE SCHEDULE FOR MANUFACTURER, ELECTRICAL DATA AND MOUNTING TYPE
- SURFACE MOUNT SQUARE LIGHT. SEE LIGHTING FIXTURE SCHEDULE FOR MANUFACTURER, ELECTRICAL DATA AND MOUNTING TYPE
- RECESSED ROUND CAN LIGHT. SEE LIGHTING FIXTURE SCHEDULE FOR MANUFACTURER, ELECTRICAL DATA AND MOUNTING TYPE
- RECESSED SQUARE CAN LIGHT. SEE LIGHTING FIXTURE SCHEDULE FOR MANUFACTURER, ELECTRICAL DATA AND MOUNTING TYPE

LIGHTING CONTROLS

- $_S - SINGLE POLE DIGITAL SWITCH, UNLESS OTHERWISE NOTED
  - 1 - SINGLE BUTTON DIGITAL SWITCH
  - 2 - 2 BUTTON DIGITAL SWITCH
  - 3 - 3 BUTTON DIGITAL SWITCH
  - 4 - 4 BUTTON DIGITAL SWITCH
  - 5 - 5 BUTTON DIGITAL SWITCH
  - 8 - 8 BUTTON DIGITAL SWITCH
  - K - KEY OPERATED SWITCH
  - O - DIGITAL SWITCH / OCCUPANCY SENSOR COMBINATION
  - T - DIGITAL TIMER SWITCH w/ OVERRIDE
  - 3W - 3 WAY TOGGLE SWITCH
  - WP - TOGGLE SWITCH IN WEATHERPROOF BOX w/ COVER
- $_D - DIGITAL DIMMER SWITCH, UNLESS OTHERWISE NOTED
  - 1 - SINGLE BUTTON DIGITAL SWITCH
  - 2 - 2 BUTTON DIGITAL SWITCH
  - 3 - 3 BUTTON DIGITAL SWITCH
  - 4 - 4 BUTTON DIGITAL SWITCH
  - 5 - 5 BUTTON DIGITAL SWITCH
  - 8 - 8 BUTTON DIGITAL SWITCH
  - O - DIGITAL SWITCH / OCCUPANCY SENSOR COMBINATION
- LCP - DIGITAL LIGHTING CONTROL PANEL
- LRP - LIGHTING RELAY CONTACT PANEL
- OS - OCCUPANCY SENSOR, CELING SURFACE MOUNT
- PS - PHOTO SENSOR, CEILING SURFACE MOUNT
- TC - ASTRONOMICAL TIME CLOCK

FIRE ALARM EQUIPMENT

- WALL MOUNTED COMBINATION SPEAKER / STROBE FIRE ALARM DEVICE (STROBE TO BE 110 CD UNLESS NOTED) MOUNTED AT 80" AFF UNLESS OTHERWISE NOTED
- WALL MOUNTED STROBE FIRE ALARM DEVICE (STROBE TO BE 110 CD UNLESS NOTED) MOUNTED AT 80" AFF UNLESS OTHERWISE NOTED
- WALL MOUNTED SPEAKER FIRE ALARM DEVICE MOUNTED AT 80" AFF UNLESS OTHERWISE NOTED
- WALL MOUNTED MANUAL PULL STATION FIRE ALARM DEVICE MOUNTED AT 48" AFF UNLESS OTHERWISE NOTED
- P - PHOTO-ELECTRIC TYPE SMOKE DETECTOR, 120V w/ BATTERY BACK-UP.
- HEAT DETECTOR, COMBINATION RATE OF RISE AND FIXED TEMPERATURE
- CO - CARBON MONOXIDE DETECTOR
- DT - SUPPLY AIR SIDE HVAC DUCT SMOKE DETECTOR w/ MOTORIZED ACTUATOR AND ADDRESSABLE MODULE, SEE MECHANICAL PLANS FOR SPECIFICATIONS AND MOUNTING LOCATION
- DT - RETURN AIR SIDE HVAC DUCT SMOKE DETECTOR w/ MOTORIZED ACTUATOR AND ADDRESSABLE MODULE, SEE MECHANICAL PLANS FOR SPECIFICATIONS AND MOUNTING LOCATION
- FACP - FIRE ALARM CONTROL PANEL, REFER TO FIRE ALARM SPECIFICATIONS FOR INFORMATION
- FAA - FIRE ALARM ANNUNCIATOR PANEL, REFER TO FIRE ALARM SPECIFICATIONS FOR INFORMATION
- FATC - FIRE ALARM TERMINAL CABINET, REFER TO FIRE ALARM SPECIFICATIONS FOR INFORMATION
- SR - FIRE ALARM SHUT-DOWN RELAY NODE
- KB - TAMPER RESISTANT KNOX BOX, MODEL 3200 w/ HINGED DOOR OR APPROVED EQUAL
- DH - DOOR HOLD OPEN DEVICE
- DH - AUTOMATIC DOOR RELEASE FOR FIRE CONTROL
- FIRE ALARM RELAY SWITCH
- FS - WATER FLOW SWITCH (FIRE PROTECTION DEVICE)
- TS - WATER TAMPER SWITCH (FIRE PROTECTION DEVICE)
- WB - ELECTRIC WATER BELL (FIRE PROTECTION DEVICE)

SECURITY CCTV CAMERAS

- WALL MOUNTED FIXED CCTV CAMERA w/ WIDE ANGLE LENS
  - 1 - TAMPER PROOF DOME TYPE CAMERA
  - 2 - VANDAL RESISTANT / PRISON GRADE TYPE CAMERA
- CEILING MOUNTED FIXED CCTV CAMERA w/ WIDE ANGLE LENS
  - 1 - TAMPER PROOF DOME TYPE CAMERA
  - 2 - VANDAL RESISTANT / PRISON GRADE TYPE CAMERA
- CEILING MOUNTED 360° VIEW CCTV CAMERA w/ WIDE ANGLE LENS
  - 1 - TAMPER PROOF DOME TYPE CAMERA
  - 2 - VANDAL RESISTANT / PRISON GRADE TYPE CAMERA

LOW VOLTAGE TECHNOLOGY DEVICES

- WALL MOUNTED DATA OUTLET AND BACK BOX, MOUNTED AT 18" AFF UNLESS OTHERWISE NOTED
  - 2 - (2) DATA JACK OUTLET
  - 3 - (3) DATA JACK OUTLET
  - 4 - (4) DATA JACK OUTLET
  - 6 - (6) DATA JACK OUTLET
- WALL MOUNTED VOICE OUTLET AND BACK BOX, MOUNTED AT 48" AFF UNLESS OTHERWISE NOTED
  - 2 - (2) DATA JACK OUTLET
  - 3 - (3) DATA JACK OUTLET
  - 4 - (4) DATA JACK OUTLET
- WALL MOUNTED COMBO VOICE/DATA OUTLET AND BACK BOX, MOUNTED AT 18" AFF UNLESS OTHERWISE NOTED
  - 2 - (2) DATA JACK OUTLET
  - 3 - (3) DATA JACK OUTLET
  - 4 - (4) DATA JACK OUTLET
  - 6 - (6) DATA JACK OUTLET
- DATA OUTLET AND BACK BOX, FLUSH MOUNTED IN FLOOR, METAL BOX w/ COVER UNLESS OTHERWISE NOTED
  - 2 - (2) DATA JACK OUTLET
  - 3 - (3) DATA JACK OUTLET
  - 4 - (4) DATA JACK OUTLET
  - 6 - (6) DATA JACK OUTLET
- COMBO VOICE/DATA OUTLET AND BACK BOX, FLUSH MOUNTED IN FLOOR, METAL BOX w/ COVER UNLESS OTHERWISE NOTED
  - 2 - (2) DATA JACK OUTLET
  - 3 - (3) DATA JACK OUTLET
  - 4 - (4) DATA JACK OUTLET
  - 6 - (6) DATA JACK OUTLET
- DATA OUTLET AND BACK BOX, FLUSH MOUNTED IN CEILING, METAL BOX w/ COVER UNLESS OTHERWISE NOTED
  - 2 - (2) DATA JACK OUTLET
  - 3 - (3) DATA JACK OUTLET
  - 4 - (4) DATA JACK OUTLET
  - 6 - (6) DATA JACK OUTLET
- COMBO VOICE/DATA OUTLET AND BACK BOX, FLUSH MOUNTED IN CEILING, METAL BOX w/ COVER UNLESS OTHERWISE NOTED
  - 2 - (2) DATA JACK OUTLET
  - 3 - (3) DATA JACK OUTLET
  - 4 - (4) DATA JACK OUTLET
  - 6 - (6) DATA JACK OUTLET

LOW VOLTAGE SECURITY DEVICES

- CR - ACCESS CONTROL CARD READER
- CK - ACCESS CONTROL COMBINATION CARD READER/KEYPAD
- K - ACCESS CONTROL KEY PAD
- KS - KEY SWITCH OPERATED ACCESS CONTROL
- ES - ELECTRONIC SWITCH ACCESS CONTROL
- RS - RELAY SWITCH ACCESS CONTROL
- MS - WALL MOUNT SECURITY MOTION SENSOR
- CR - CEILING MOUNT SECUITY MOTION SENSOR
- LA - LOCAL ALARM
- CS - CALL STATION 2-WAY COMMUNICATION
- DBR - PUSH TO EXIT DOOR BAR w/ LOCAL ALARM
- IS - WALL MOUNTED INTERCOMM / SPEAKER SYSTEM
- PD - PUSH BUTTON & BACK BOX FOR DOOR RELEASE
- S - WALL MOUNTED SPEAKER FOR PUBLIC ADRESS SYSTEM
- S - CEILING MOUNTED SPEAKER FOR PUBLIC ADDRESS SYSTEM
- M - WALL MOUNTED MICROPHONE / VOICE PICK-UP FOR SECURITY
- M - CEILING MOUNTED MICROPHONE / VOICE PICK-UP FOR SECURITY
- NC - NETWORK CONTROLLER
- TJ - FLOOR / WALL MOUNTED TECHNOLOGY SYSTEMS ONLY JUNCTION / BACK BOX
- CR - CEILING MOUNTED TECHNOLOGY SYSTEMS ONLY JUNCTION / BACK BOX
- SPB - TECHNOLOGY SYSTEMS ONLY PULL BOX
- FPB - FIBER OPTIC ONLY PULL BOX
- TGB - TELECOMMUNICATIONS GROUND BAR
- TTB - 3/4" PLYWOOD TERMINAL BACKBOARD w/ GRAY FIRE RESISTANT PAINT
- 2 POST IDF/MDF DATA RACK
- 4 POST IDF/MDF DATA CABINET
- WAP - WIRELESS ACCESS POINT CEILING JACK AND BACK BOX w/ BLUE DATA INPUT CAT6a WIRE

FOR PERMIT & BIDDING ONLY

AVCON

TRANSFORMING TODAY'S IDEAS INTO TOMORROW'S REALITY

RICHARD CREAVALLE, P.E.
FL LICENSE NO.:59885
FBPR CERTIFICATE OF AUTHORIZATION NO. 5057

NO	DATE	REVISION	BY

ELECTRICAL, TECHNOLOGY & FIRE ALARM SYMBOL LEGEND

RELEASE FOR BID

AIRPORT TERMINAL AND HANGAR DEVELOPMENT

PREPARED FOR

DEFUNIAK SPRINGS MUNICIPAL AIRPORT

DESIGNED BY:	FB
DRAWN BY:	FB
CHECKED BY:	KB
APPROVED BY:	RC
PROJECT NO:	2019.028.01
DATE:	November 1, 2021

SHEET NUMBER

E-002

THIS DOCUMENT CONTAINS PRIVILEGED AND PROPRIETARY INFORMATION. ALL OF WHICH IS EXPRESSLY PROVIDED BY AVCON, INC., FOR USE BY THE INTENDED RECIPIENT, AND FOR A SPECIFIC PURPOSE, WITHOUT THE EXPRESS WRITTEN CONSENT OF AVCON, INC. ANY DISTRIBUTION, REPRODUCTION, OR OTHER USE OF THIS DOCUMENT, IN WHOLE OR IN PART, IS STRICTLY PROHIBITED.

DEFUNIAK SPRINGS MUNICIPAL AIRPORT - LUMINAIRE SCHEDULE

FIXTURE ID	LIGHT FIXTURE DESCRIPTION	MODEL NO.	FIXTURE LUMENS	FIXTURE LOAD (VA)	LAMP TYPE	FIXTURE CCT	MANUFACTURER
AT22	2' X 2' ARCHITECTURAL TROFFER	AT3-22-L30-835-D-DIM-UNV	2816 LM	29.5 VA	LED	4000 K	HE WILLIAMS
C2	2' NARROW STRIP COVE LIGHT	75-2-L30-835-DIM-UNV	3092 LM	21.3 VA	LED	4000 K	HE WILLIAMS
C3	3' NARROW STRIP COVE LIGHT	75-3-L40-835-DIM-UNV	3929 LM	26.9 VA	LED	4000 K	HE WILLIAMS
C4	4' NARROW STRIP COVE LIGHT	75-4-L30-835-DIM-UNV	3011 LM	19.6 VA	LED	4000 K	HE WILLIAMS
CR3	3' COVE LIGHT, RECESSED REGRESSED	HP-2-R-RG-3FT-H-840	1918 LM	21.3 VA	LED	4000 K	FINELITE
CR4	4' COVE LIGHT, RECESSED REGRESSED	HP-2-R-RG-4FT-H-840	2557 LM	28.4 VA	LED	4000 K	FINELITE
DR41	4.5" DOWNLIGHT - ROUND 1000LM - OPEN WIDE	4DR-TL-L10-840-DIM-UNV-OW	1037 LM	9.0 VA	LED	4000 K	HE WILLIAMS
DR43	4.5" DOWNLIGHT - ROUND 3000LM - OPEN WIDE	4DR-TL-L30-840-DIM-UNV-OW	3015 LM	27.8 VA	LED	4000 K	HE WILLIAMS
DR62	6" DOWNLIGHT - ROUND 2000LM - SHOWER NARROW	6DR-TL-L20-840-DIM-UNV-SN	1836 LM	19.5 VA	LED	4000 K	HE WILLIAMS
DS65	6" DOWNLIGHT - SQUARE 5000LM - OPEN WIDE	6DS-L50-840-DIM-UNV-OW	4786 LM	52.0 VA	LED	4000 K	HE WILLIAMS
F1	100W POLARIS FLOODLIGHT, WALL-MOUNT AT 30' AFF, TILT 20-DEGREES.	AFL-100-40K-A90-V01-WT-TL-NDIM	15669 LM	110.0 VA	LED	4000 K	SPECGRADE
F2	DESIGNER FLOOD LED FOR FLAG POLE, ASYMMETRICAL 33-DEGREE, 32-LED	DFC7-A33-32L-900-NW-G2-UNV	10301 LM	94.0 VA	LED	4000 K	SIGNIFY
HB	CIRCULAR HIGH BAY HANGAR LED, PENDANT-MOUNT SO BOTTOM OF FIXTURE IS 29' AFF.	CHB-P-400W-40K-WD-120-U-D-B-XX	52000 LM	400.0 VA	LED	4000 K	TRULY GREEN SOLUTIONS
HB(E)	CIRCULAR HIGH BAY HANGAR LED, PENDANT-MOUNT SO BOTTOM OF FIXTURE IS 29' AFF. EMERGENCY BATTERY BACKUP.	CHB-P-400W-40K-WD-120-U-D-B-EM-XX	52000 LM	400.0 VA	LED	4000 K	TRULY GREEN SOLUTIONS
L6	6' FLEXIBLE LINEAR LED W/ 48W MAGNETIC DRIVER	VIP-24CEL500-50-6-JUSMAG	3546 LM	48.0 VA	LED	5000 K	LUCETTA CELESTE
L10	10' FLEXIBLE LINEAR LED W/ 96W MAGNETIC DRIVER	VIP-24CEL500-50-10-JUSMAG	5910 LM	96.0 VA	LED	5000 K	LUCETTA CELESTE
L15	15' FLEXIBLE LINEAR LED W/ 96W MAGNETIC DRIVER	VIP-24CEL500-50-15-JUSMAG	8865 LM	96.0 VA	LED	5000 K	LUCETTA CELESTE
L23	23' FLEXIBLE LINEAR LED W/ ONE 48W AND ONE 96W MAGNETIC DRIVER	VIP-24CEL500-50-23-JUSMAG	13593 LM	144.0 VA	LED	5000 K	LUCETTA CELESTE
N10	10' NEON LED STRIP LIGHTS FOR RESTROOM MIRROR ACCENT LIGHTING	NEON LED STRIP LIGHT - 120V - 126"	N/A	25.0 VA	LED	N/A	SOLID APOLLO LED
P4	4' DIAMETER PENDANT-MOUNT HALO LED, KATRINA DIRECT/INDIRECT	KAT-DR/IN-CLO100-CLO100-40-4-WMT-277-CSS-M	15540 LM	160.4 VA	LED	4000 K	BIRCHWOOD LTG
RT22	2' X 2' RECESSED TROFFER	LP-22-L40-835-DIM-UNV	4155 LM	39.2 VA	LED	4000 K	HE WILLIAMS
S4	4' SURFACE-MOUNT WRAP	39W-4-L52-835-A-DIM-UNV	5206 LM	37.2 VA	LED	4000 K	HE WILLIAMS
W4	4' WALL-MOUNT INDIRECT HP-2 LED	HP-2-WM-I-4'-V-V-835-ASY	6988 LM	73.8 VA	LED	4000 K	FINELITE
WC	7.5" DIAMETER WALL CYLINDER, DIRECT/INDIRECT, MOUNT 15' AFF.	LC7UD-L53CU-L12CD-840-CS-WU-WD	4040 LM UP / 1242 LM DOWN	79.0 VA	LED	4000 K	HE WILLIAMS
WJ	1390LM STONCO ROUGHLYTE LED WALL "JELLY JAR" LIGHT, MOUNT 7' AFF.	VWXL-14-NW-G1-8	1390 LM	14.0 VA	LED	4000 K	SIGNIFY
WP2	2277LM STONCO WALL PACK LED, MOUNT 7' AFF.	TW20-NW-G1-8	2277 LM	19.0 VA	LED	4000 K	SIGNIFY
WP4	4546LM GARDCO WALL PACK LED. MOUNT 24' AFF.	121-16L-700-NW-G4-2	4546 LM	38.4 VA	LED	4000 K	SIGNIFY
WS4	4' PERIMETER WALL SLOT LED	PXF-62-03-08-L10-835-S-DIM-UNV	987 LM	10.0 VA	LED	4000 K	HE WILLIAMS
X1	1-SIDED EXIT SIGN	EX-R-EM-WHT-D	N/A	14.0 VA	LED	N/A	HE WILLIAMS
X1L	1-SIDED EXIT SIGN W/ LEFT ARROW	EX-R-EM-WHT-D	N/A	14.0 VA	LED	N/A	HE WILLIAMS
X1R	1-SIDED EXIT SIGN W/ RIGHT ARROW	EX-R-EM-WHT-D	N/A	14.0 VA	LED	N/A	HE WILLIAMS

FOR PERMIT & BIDDING ONLY

AVCON

TRANSFORMING TODAY'S IDEAS INTO TOMORROW'S REALITY

RICHARD CREAVALLE, P.E.
FL LICENSE NO.:59885
FBPR CERTIFICATE OF AUTHORIZATION NO. 5057

NO.	DATE	REVISION	BY
1.	05/14/2021	Addendum No. 1	AR/FB

LUMINAIRE SCHEDULE

RELEASE FOR BID

AIRPORT TERMINAL AND HANGAR DEVELOPMENT

PREPARED FOR

DEFUNIAK SPRINGS MUNICIPAL AIRPORT

DESIGNED BY:	FB
DRAWN BY:	FB
CHECKED BY:	KB
APPROVED BY:	RC
PROJECT NO:	2019.028.01
DATE:	November 1, 2021

SHEET NUMBER

E-100

THIS DOCUMENT CONTAINS PRIVILEGED AND PROPRIETARY INFORMATION, ALL OF WHICH IS EXPRESSLY PROVIDED BY AVCON, INC., FOR USE BY THE INTENDED RECIPIENT, AND FOR A SPECIFIC PURPOSE. WITHOUT THE EXPRESS WRITTEN CONSENT OF AVCON, INC., ANY DISTRIBUTION, REPRODUCTION, OR OTHER USE OF THIS DOCUMENT, IN WHOLE OR IN PART, IS STRICTLY PROHIBITED.

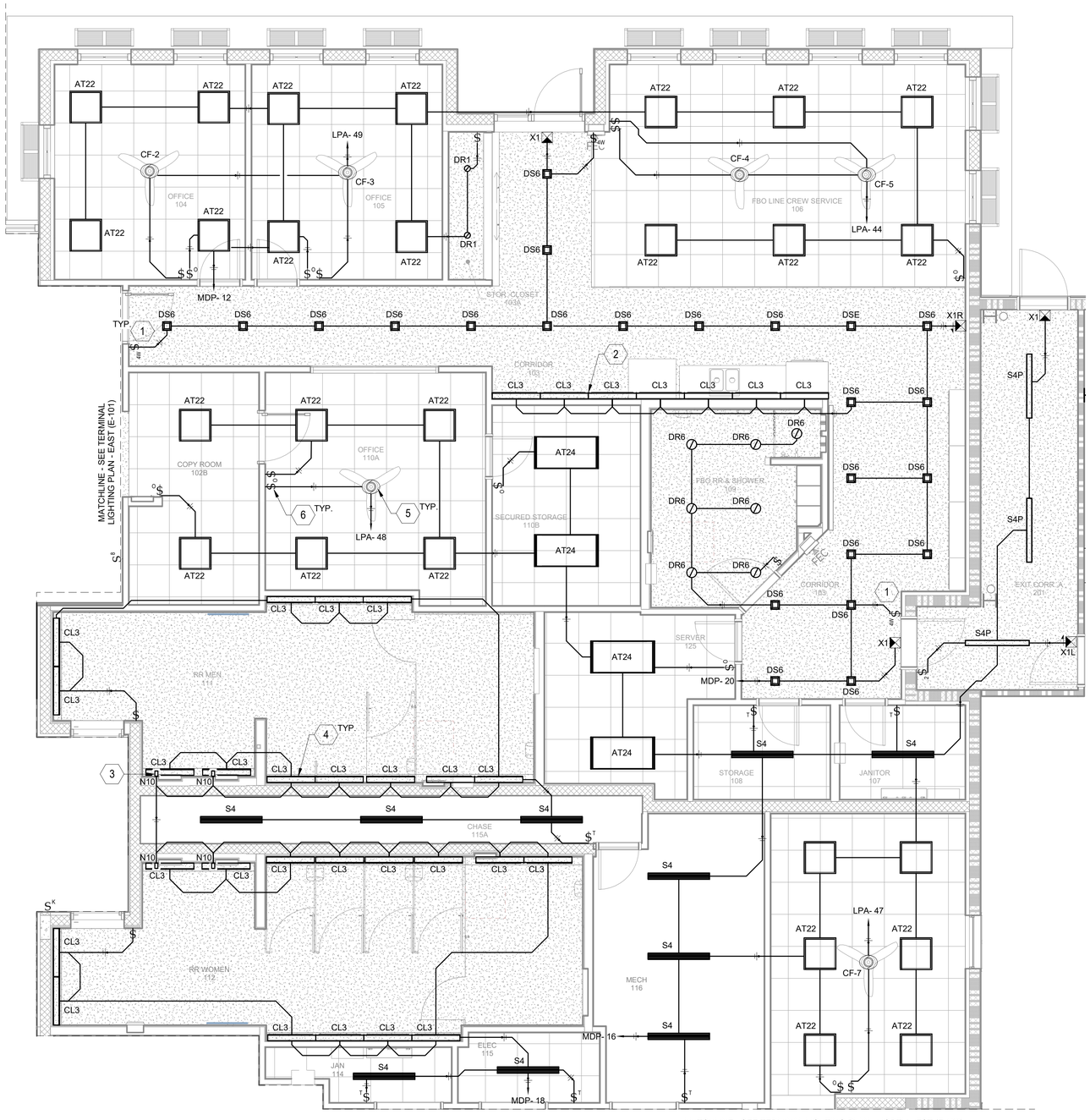

MATCHLINE - SEE TERMINAL LIGHTING PLAN - NORTHWEST (E-102)

2 TERMINAL LIGHTING PLAN - SOUTHWEST
1/4" = 1'-0"

GENERAL NOTES

1. COVE LIGHT BACK LIGHTS AT COUNTER AND ROOM LIGHTS TO BE SWITCHED/DIMMED INDEPENDENTLY.
2. ALL OFFICE SPACES, INCLUDING CONFERENCE AND BREAK ROOMS, TO HAVE 50% OF RECEPTACLES CONTROLLED BY PLUG LOAD CONTROLLER.
3. ALL EXIT LIGHTS AND BATTERY-BACKED LED DRIVERS SHALL BE CIRCUITED AHEAD OF SWITCH LEG.
4. ALL FIXTURE TAGS WITH THE SUFFIX '(E)' DENOTE EMERGENCY BATTERY-BACKED LIGHTS.
5. EMERGENCY LIGHTING CIRCUITS TO RUN TO 20A EPC-A POWER CONTROL UNITS IN ELECTRICAL ROOM FOR SWITCHING POWER SOURCE FROM MDP TO CEPS POWER INVERTER. SEE 'ENLARGED ELECTRICAL ROOM PLAN' SHEET E-202.
6. SEE LIGHTING CONTROL RISER DIAGRAM ON SHEET E-401 FOR CONTROL MODEL NUMBERS AND MANUFACTURER.
7. ALL OCCUPANCY SENSORS TO BE OF THE ILC LSG3 SERIES OR APPROVED EQUAL. SEE LIGHTING CONTROL RISER DIAGRAM ON SHEET E-401.

LIGHTING KEY NOTES (X)

1	SWITCHES AT ENDS OF CORRIDOR TO BE PROGRAMMED FOR 3-WAY SWITCHING.
2	MOUNT FIXTURES ABOVE CABINETS, COORDINATE WITH ARCHITECTURAL PLANS FOR DETAILS
3	10' NEON LED STRIP LIGHT AROUND PERIMETER OF RESTROOM MIRROR
4	MOUNT FIXTURES IN RECESSED AREA OF CEILING, COORDINATE WITH ARCHITECTURAL PLANS, TYPICAL ALL CL3 FIXTURES IN RESTROOM AREAS
5	THE CONTRACTOR SHALL FURNISH AND INSTALL THE CEILING FANS IDENTIFIED BY CF-X. THESE FANS SHALL BE 52", WHITE, HUNTER FANS, FLUSH MOUNTED OR APPROVED EQUAL.
6	SWITCH TO FAN OR FAN/LIGHT. COORDINATE WITH ARCHITECTURAL PLANS FOR EXACT LOCATION, TYPICAL ALL FANS

CALCULATION SUMMARY

ROOM/LOCATION	CALC TYPE	UNITS	AVG	MAX	MIN	AVG/MIN	MAX/MIN
103 CORRIDOR - FLOOR	ILLUMINANCE	FC	30.17	41.4	15.4	1.96	2.69
103A STORAGE - WORKPLANE	ILLUMINANCE	FC	32.96	44.9	25.5	1.29	1.76
104 OFFICE - WORKPLANE	ILLUMINANCE	FC	46.84	52.2	40.4	1.16	1.29
105 OFFICE - WORKPLANE	ILLUMINANCE	FC	46.90	52.3	40.5	1.16	1.29
106 FBO CREW SERVICE - WORKPLANE	ILLUMINANCE	FC	48.54	61.3	31.9	1.52	1.92
107 JANITOR - WORKPLANE	ILLUMINANCE	FC	47.83	60.9	36.3	1.32	1.68
108 STORAGE - WORKPLANE	ILLUMINANCE	FC	16.86	59.5	36.6	0.46	1.63
109 FBO RR MEN - WORKPLANE	ILLUMINANCE	FC	31.80	59.1	15.0	2.12	3.94
110A OFFICE - WORKPLANE	ILLUMINANCE	FC	43.36	50.4	32.6	1.33	1.55
110B SECURED STORAGE - WORKPLANE	ILLUMINANCE	FC	50.61	68.4	33.5	1.51	2.04
111 RR MEN - WORKPLANE	ILLUMINANCE	FC	60.56	98.0	15.8	3.83	6.20
125 SERVER - WORKPLANE	ILLUMINANCE	FC	55.02	80.9	16.5	3.33	4.90
201 EXIT CORRIDOR A - FLOOR	ILLUMINANCE	FC	20.40	31.5	15.2	1.34	2.07

FOR PERMIT & BIDDING ONLY

AVCON
TRANSFORMING TODAY'S IDEAS INTO TOMORROW'S REALITY

NORTH

RICHARD CREAVALLE, P.E.
FL LICENSE NO.:59885
FBPR CERTIFICATE OF AUTHORIZATION NO. 5057

NO.	DATE	REVISION	BY
1	05/14/2021	Addendum No. 1	AR/FB

TERMINAL LIGHTING PLAN

RELEASE FOR BID

AIRPORT TERMINAL AND HANGAR DEVELOPMENT

PREPARED FOR
DEFUNIAK SPRINGS MUNICIPAL AIRPORT

DESIGNED BY: FB
DRAWN BY: FB
CHECKED BY: KB
APPROVED BY: RC
PROJECT NO: 2019.028.01
DATE: November 1, 2021

SHEET NUMBER
E-101

THIS DOCUMENT CONTAINS PRIVILEGED AND PROPRIETARY INFORMATION, ALL OF WHICH IS EXPRESSLY PROVIDED BY AVCON, INC., FOR USE BY THE INTENDED RECIPIENT, AND FOR A SPECIFIC PURPOSE. WITHOUT THE EXPRESS WRITTEN CONSENT OF AVCON, INC., ANY DISTRIBUTION, REPRODUCTION, OR OTHER USE OF THIS DOCUMENT, IN WHOLE OR IN PART, IS STRICTLY PROHIBITED.

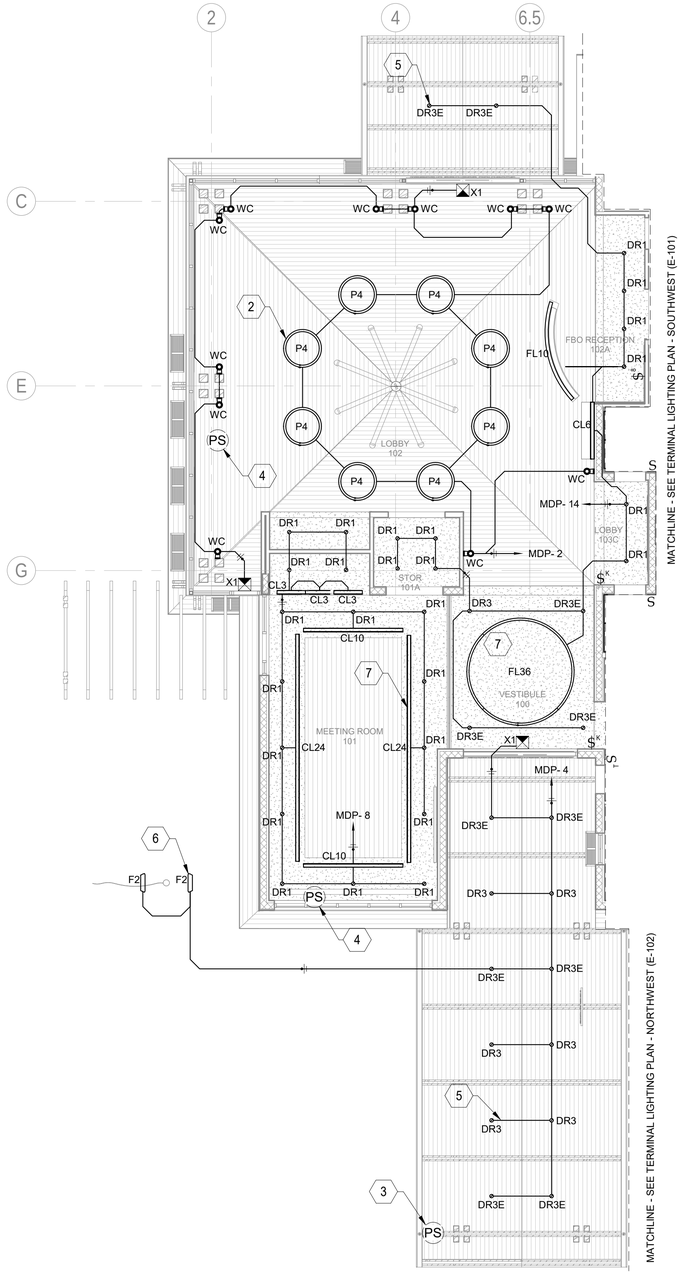

2 TERMINAL LIGHTING PLAN - EAST
1/8" = 1'-0"

CALCULATION SUMMARY

ROOM/LOCATION	CALC TYPE	UNITS	AVG	MAX	MIN	AVG/MIN	MAX/MIN
001 RISER - WORKPLANE	ILLUMINANCE	FC	54.52	59.7	51.7	1.05	1.15
112 RR WOMEN - WORKPLANE	ILLUMINANCE	FC	63.48	114.6	13.9	4.57	8.24
113 COORIDOR & 143 VENDING/ATM - FLOOR	ILLUMINANCE	FC	32.16	46.1	15.2	2.12	3.03
114 JAN - WORKPLANE	ILLUMINANCE	FC	56.27	83.8	17.7	3.18	4.73
115 ELEC - FLOOR	ILLUMINANCE	FC	57.75	78.9	39.1	1.48	2.02
116 MECH - WORKPLANE	ILLUMINANCE	FC	21.48	24.9	16.3	1.32	1.53
117 STUDENT FLIGHT PLANNING - WORKPLANE	ILLUMINANCE	FC	60.08	71.1	44.0	1.37	1.62
118 FLIGHT INSTRUCTOR - WORKPLANE	ILLUMINANCE	FC	46.02	55.5	26.9	1.71	2.06
119 OFFICE - WORKPLANE	ILLUMINANCE	FC	46.63	57.3	26.2	1.78	2.19
120 FLIGHT CREW QUIET ROOM - WORKPLANE	ILLUMINANCE	FC	50.81	76.8	31.5	1.61	2.44
121 FLIGHT CREW LOUNGE - WORKPLANE	ILLUMINANCE	FC	74.49	98.7	43.1	1.73	2.29
121B FLIGHT CREW RSTROOM - WORKPLANE	ILLUMINANCE	FC	25.69	54.2	15.0	1.71	3.61
202 EXIT CORRIDOR B - FLOOR	ILLUMINANCE	FC	19.55	26.6	14.0	1.40	1.90

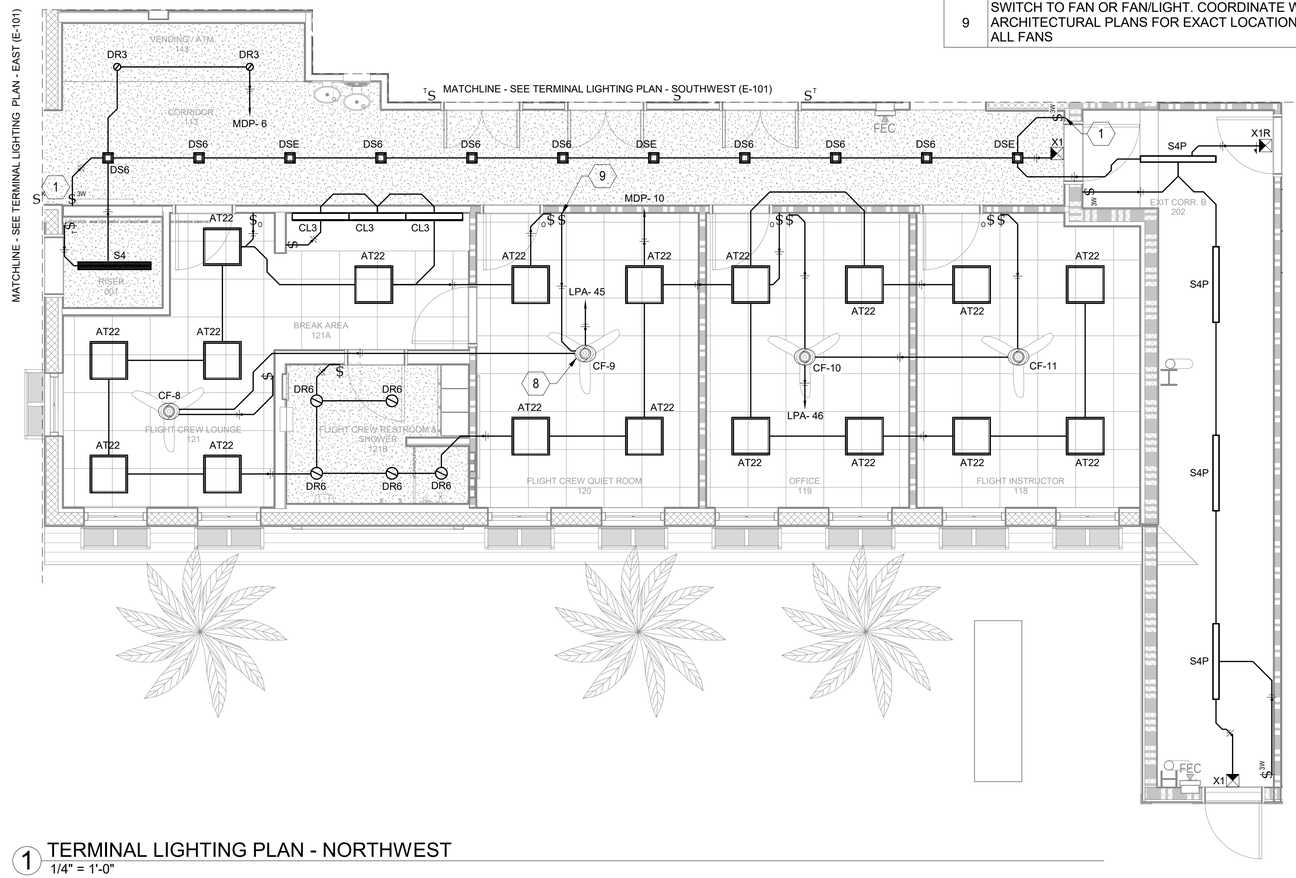

1 TERMINAL LIGHTING PLAN - NORTHWEST
1/4" = 1'-0"

GENERAL NOTES

1. COVE LIGHT BACK LIGHTS AT COUNTER AND ROOM LIGHTS TO BE SWITCHED/DIMMED INDEPENDENTLY.
2. ALL OFFICE SPACES, INCLUDING CONFERENCE AND BREAK ROOMS, TO HAVE 50% OF RECEPTACLES CONTROLLED BY PLUG LOAD CONTROLLER.
3. ALL EXIT LIGHTS AND BATTERY-BACKED LED DRIVERS SHALL BE CIRCUITED AHEAD OF SWITCH LEG.
4. ALL FIXTURE TAGS WITH THE SUFFIX '(E)' DENOTE EMERGENCY BATTERY-BACKED LIGHTS.
5. EMERGENCY LIGHTING CIRCUITS TO RUN TO 20A EPC-A POWER CONTROL UNITS IN ELECTRICAL ROOM FOR SWITCHING POWER SOURCE FROM MDP TO CEPS POWER INVERTER. SEE 'ENLARGED ELECTRICAL ROOM PLAN' SHEET E-202.
6. SEE LIGHTING CONTROL RISER DIAGRAM ON SHEET E-401 FOR CONTROL MODEL NUMBERS AND MANUFACTURER.

LIGHTING KEY NOTES (X)

1	SWITCHES AT ENDS OF CORRIDOR TO BE PROGRAMMED FOR 3-WAY SWITCHING.
2	COORDINATE MOUNTING OF PENDANT LIGHTING WITH CEILING FAN INSTALLATION. REFER TO A-601.
3	OUTDOOR PHOTOCELL CONTROL FOR EXTERIOR LIGHTS, MOUNTED ABOVE CANOPY.
4	INDOOR PHOTO SENSOR FOR DAYLIGHT HARVESTING
5	LIGHTING CONDUIT TO BE CONCEALED ABOVE METAL CANOPY. REFER TO ARCHITECTURAL PLANS.
6	FLAG POLE WITH FLOODLIGHTS. REFER TO LUMINAIRE SCHEDULE ON SHEET E-100.
7	MOUNT FIXTURES IN RECESSED AREA OF CEILING, COORDINATE WITH ARCHITECTURAL PLANS FOR DETAILS
8	THE CONTRACTOR SHALL FURNISH AND INSTALL THE CEILING FANS IDENTIFIED BY CF-X. THESE FANS SHALL BE 52", WHITE, HUNTER FANS, FLUSH MOUNTED OR APPROVED EQUAL.
9	SWITCH TO FAN OR FAN/LIGHT. COORDINATE WITH ARCHITECTURAL PLANS FOR EXACT LOCATION, TYPICAL ALL FANS

FOR PERMIT & BIDDING ONLY

AVCON
TRANSFORMING TODAY'S IDEAS INTO TOMORROW'S REALITY

NORTH

RICHARD CREAVALLE, P.E.
FL LICENSE NO.:59885
FBPR CERTIFICATE OF AUTHORIZATION NO. 5057

NO.	DATE	REVISION	BY
1.	05/14/2021	Addendum No. 1	AR/FB

TERMINAL LIGHTING PLAN
RELEASE FOR BID

AIRPORT TERMINAL AND HANGAR DEVELOPMENT
PREPARED FOR
DEFUNIAK SPRINGS MUNICIPAL AIRPORT

DESIGNED BY:	FB
DRAWN BY:	FB
CHECKED BY:	KB
APPROVED BY:	RC
PROJECT NO:	2019.028.01
DATE:	November 1, 2021

SHEET NUMBER
E-102

THIS DOCUMENT CONTAINS PRIVILEGED AND PROPRIETARY INFORMATION, ALL OF WHICH IS EXPRESSLY PROVIDED BY AVCON, INC., FOR USE BY THE INTENDED RECIPIENT, AND FOR A SPECIFIC PURPOSE, WITHOUT THE EXPRESS WRITTEN CONSENT OF AVCON, INC. ANY DISTRIBUTION, REPRODUCTION, OR OTHER USE OF THIS DOCUMENT, IN WHOLE OR IN PART, IS STRICTLY PROHIBITED.

CALCULATION SUMMARY							
ROOM/LOCATION	CALC TYPE	UNITS	AVG	MAX	MIN	AVG/MIN	MAX/MIN
200 HANGAR - WORKPLANE	ILLUMINANCE	FC	42.89	52.1	20.3	2.11	2.57
EXTERIOR OF HANGAR - GROUND	ILLUMINANCE	FC	4.60	15.0	2.5	1.84	6.00

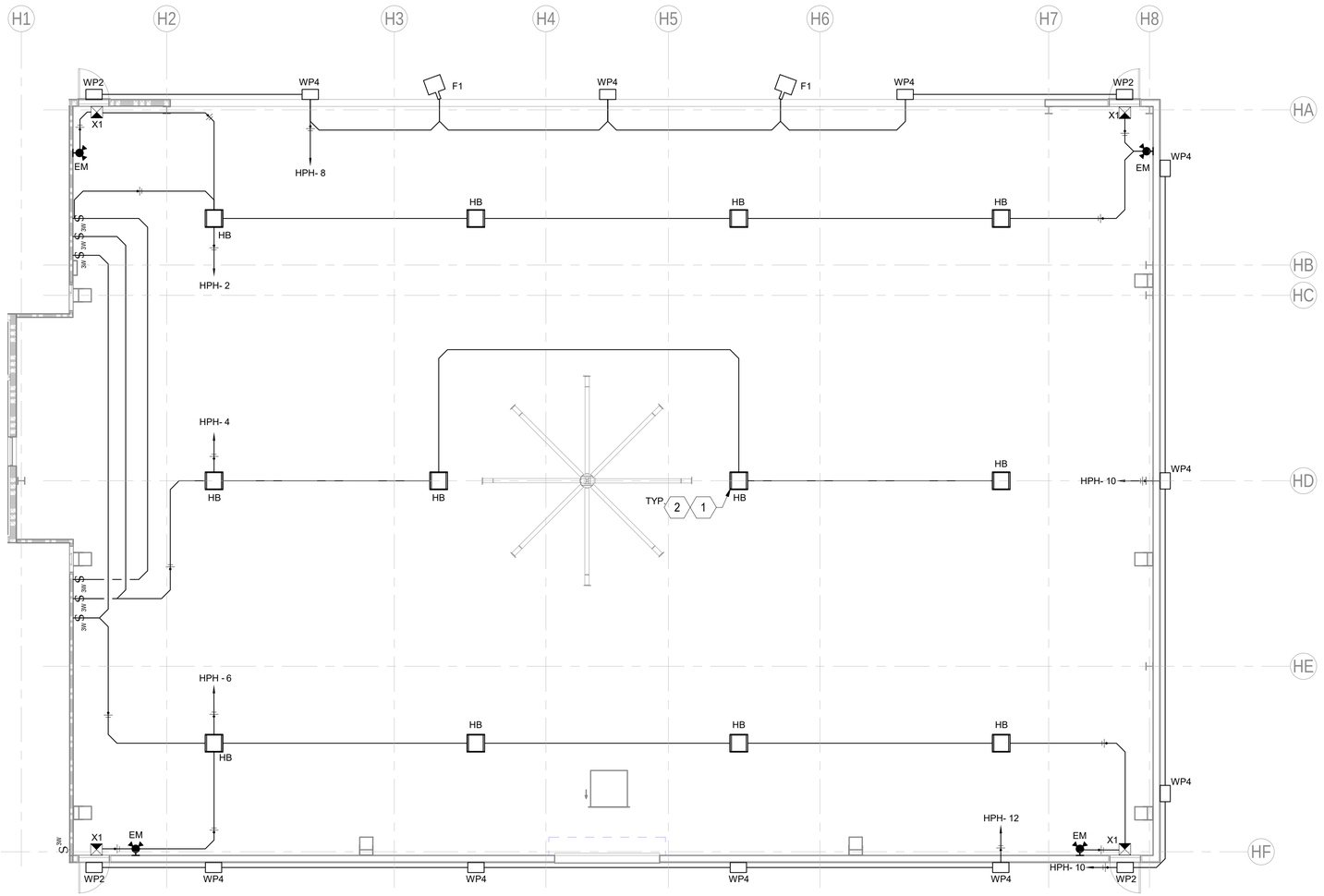

1 HANGAR LIGHTING PLAN
1/8" = 1'-0"

GENERAL NOTES

1. ALL FIXTURE TAGS WITH THE SUFFIX '(E)' DENOTE EMERGENCY BATTERY-BACKED LIGHTS.
2. ALL EXIT LIGHTS AND BATTERY-BACKED LED DRIVERS SHALL BE CIRCUITED AHEAD OF SWITCH LEG.
3. EMERGENCY CIRCUITS TO RUN TO 20A EPC-A POWER CONTROL UNITS CAPABLE OF SWITCHING POWER SOURCE FROM MDP TO CEPS POWER INVERTER.
4. FOUR EMERGENCY HIGH BAY LIGHTS NEAR CORNER EGRESS DOORS PROVIDE SUFFICIENT HORIZONTAL ILLUMINANCE FOR EGRESS THROUGHOUT HANGAR.
5. EMERGENCY LIGHTING CIRCUITS TO RUN TO 20A EPC-A POWER CONTROL UNITS IN ELECTRICAL ROOM FOR SWITCHING POWER SOURCE FROM HPH TO CEPS POWER INVERTER. SEE 'ENLARGED ELECTRICAL ROOM PLAN' SHEET E-202.
6. ALL LIGHT SWITCHES FOR HANGAR TO BE OF THE ILC LSG3 SERIES OR APPROVED EQUAL.

LIGHTING KEY NOTES (X)

1	COORDINATE MOUNTING OF HIGH BAY PENDANT LIGHTING WITH CEILING FAN AND HANGAR DOOR. BOTTOM OF HANGAR LIGHTS SHALL CLEAR HEIGHT OF HANGAR DOOR BY AT LEAST SIX INCHES.
2	HIGH BAY FIXTURE WITH 3' CABLE, TWIST PLUG & OPEN-LOOP HOOK, GRAY FINISH, ALUMINUM REFLECTOR, SUSPENDED (TYP.)

FOR PERMIT & BIDDING ONLY

AVCON
TRANSFORMING TODAY'S IDEAS INTO TOMORROW'S REALITY

NORTH

RICHARD CREAVALLE, P.E.
FL LICENSE NO.:59885
FBPR CERTIFICATE OF AUTHORIZATION NO. 5057

NO.	DATE	REVISION	BY
1	05/14/2021	Addendum No. 1	AR/FB

HANGAR LIGHTING PLAN

RELEASE FOR BID

AIRPORT TERMINAL AND HANGAR DEVELOPMENT

PREPARED FOR
DEFUNIAK SPRINGS MUNICIPAL AIRPORT

DESIGNED BY:	FB
DRAWN BY:	FB
CHECKED BY:	KB
APPROVED BY:	RC
PROJECT NO:	2019.028.01
DATE:	November 1, 2021

SHEET NUMBER
E-103

THIS DOCUMENT CONTAINS PRIVILEGED AND PROPRIETARY INFORMATION, ALL OF WHICH IS EXPRESSLY PROVIDED BY AVCON, INC., FOR USE BY THE INTENDED RECIPIENT, AND FOR A SPECIFIC PURPOSE. WITHOUT THE EXPRESS WRITTEN CONSENT OF AVCON, INC., ANY DISTRIBUTION, REPRODUCTION, OR OTHER USE OF THIS DOCUMENT, IN WHOLE OR IN PART, IS STRICTLY PROHIBITED.

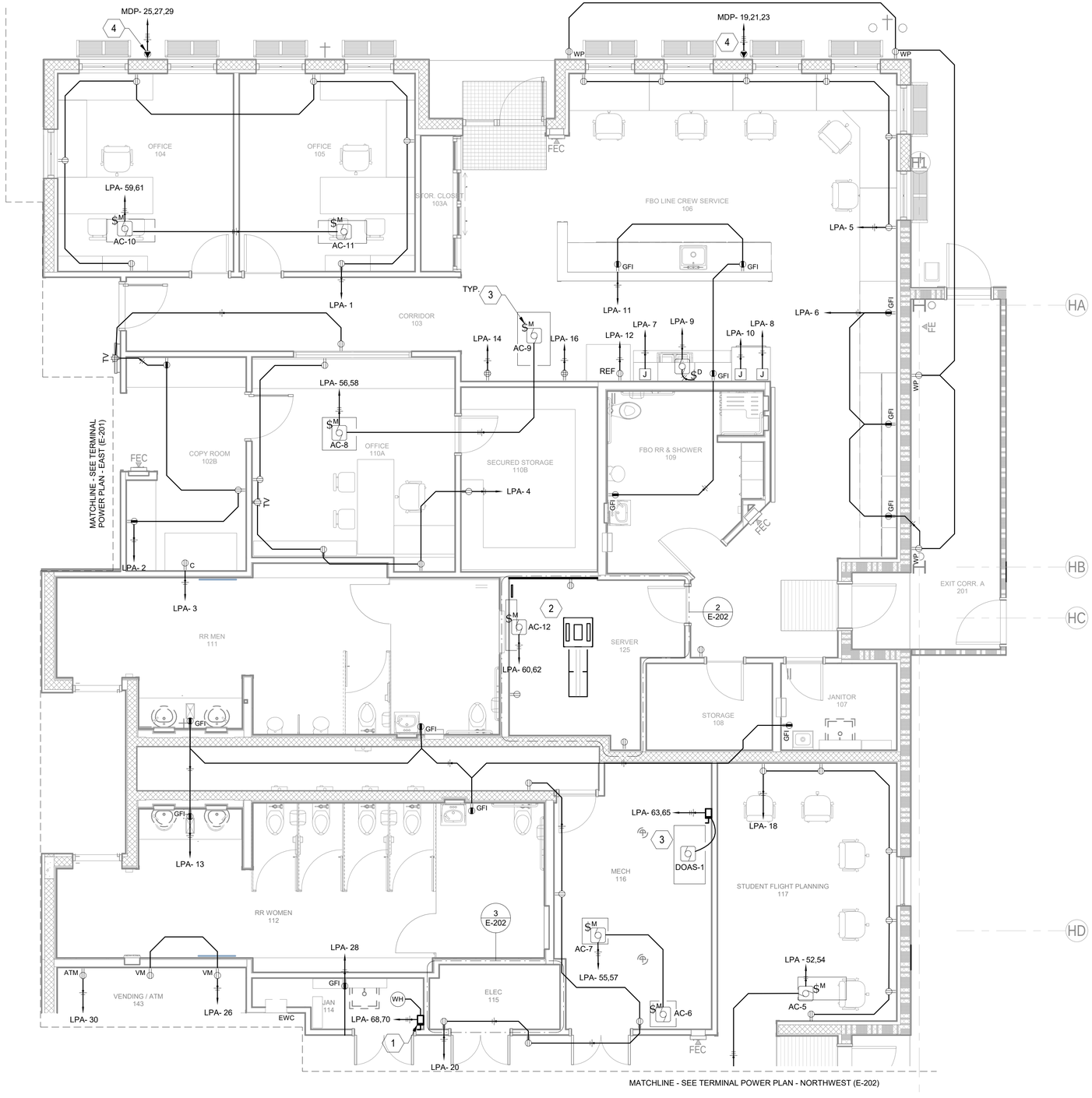

2 TERMINAL POWER PLAN - SOUTHWEST
1/4" = 1'-0"

GENERAL NOTES

1. REFER TO ARCHITECTUAL PLANS FOR ALTERNATES; THE CONTRACTOR SHALL COORDINATE THE FUTURE INSTALLATION OF THE ALTERNATE & LABEL THE CONNECTION POINT & CONCEALED CONDUIT ON THE RECORD/AS BUILT DRAWINGS

ELECTRICAL KEY NOTES (X)

1	NEMA 1, 208V,3PH,30A NF DISCONNECT SWITCH.
2	REFER TO ENLARGED PLAN ON SHEET E-202 FOR OTHER POWER DETAILS.
3	EACH UNIT TO BE CONNECTED WITH ITS OWN MOTOR TOGGLE SWITCH. REFER TO MECHANICAL DRAWINGS FOR EXACT LOCATION OF ALL UNITS.
4	PROVIDE AND INSTALL APPLETON ADJA6034-125 3W-4P GROUND POWER UNIT RECEPTACLE. SURFACE MOUNT TO EXTERIOR OF BUILDING.

FOR PERMIT & BIDDING ONLY

AVCON
TRANSFORMING TODAY'S IDEAS INTO TOMORROW'S REALITY

NORTH

RICHARD CREAVALLE, P.E.
FL LICENSE NO.:59885
FBPR CERTIFICATE OF AUTHORIZATION NO. 5057

NO	DATE	REVISION	BY
1	05/14/2021	Addendum No. 1	AR/FB

TERMINAL POWER PLAN

RELEASE FOR BID

AIRPORT TERMINAL AND HANGAR DEVELOPMENT

PREPARED FOR
DEFUNIAK SPRINGS MUNICIPAL AIRPORT

DESIGNED BY:	FB
DRAWN BY:	FB
CHECKED BY:	KB
APPROVED BY:	RC
PROJECT NO:	2019.028.01
DATE:	November 1, 2021

SHEET NUMBER
E-201

THIS DOCUMENT CONTAINS PRIVILEGED AND PROPRIETARY INFORMATION. ALL OF WHICH IS EXPRESSLY PROVIDED BY AVCON, INC., FOR USE BY THE INTENDED RECIPIENT, AND FOR A SPECIFIC PURPOSE. WITHOUT THE EXPRESS WRITTEN CONSENT OF AVCON, INC. ANY DISTRIBUTION, REPRODUCTION, OR OTHER USE OF THIS DOCUMENT, IN WHOLE OR IN PART, IS STRICTLY PROHIBITED.

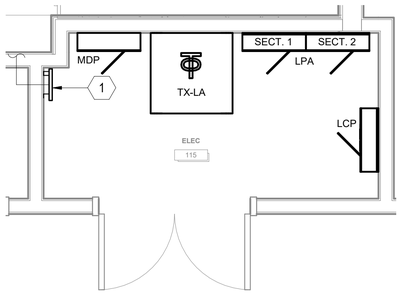

3 ENLARGED ELECTRICAL ROOM PLAN
1/2" = 1'-0"

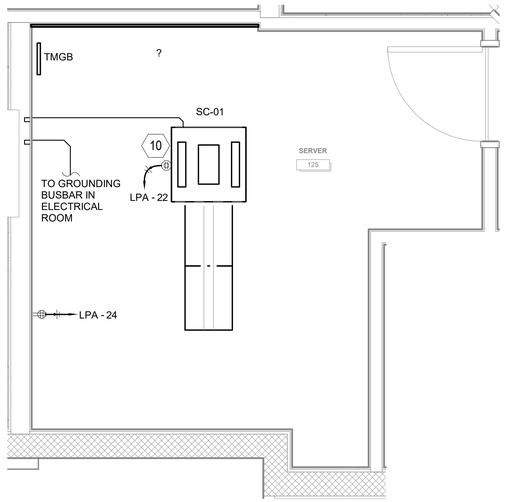

2 ENLARGED SERVER ROOM POWER & GROUNDING PLAN
1/2" = 1'-0"

GENERAL NOTES

1. REFER TO ARCHITECTUAL PLANS FOR ALTERNATES; THE CONTRACTOR SHALL COORDINATE THE FUTURE INSTALLATION OF THE ALTERNATE & LABEL THE CONNECTION POINT & CONCEALED CONDUIT ON THE RECORD/AS BUILT DRAWINGS

ELECTRICAL KEY NOTES (X)

1	ELECTRICAL GROUND BUSBAR.
2	LOCATION OF PROPOSED AV CABINET. FOR FUTURE USE, CONTRACTOR TO INSTALL FLOORBOX WITH COVER AND PULL STRING FOR ELECTRICAL CONNECTION.
3	USB POWER CONNECTION TO BE INCORPORATED IN FURNITURE.
4	WEATHERPROOF RECEPTACLE FOR LANDSCAPE LIGHTING CONTROLLER.
5	FLOOR BOX RECEPTACLES TO BE CIRCUITED TOGETHER WITH A SWITCH DEVICE.
6	SWITCHED OUTLET CONNECTED AS SHOWN.
7	JUNCTION BOX TO PROVIDE POWER FOR PROJECTOR.
8	REFER TO THE ONE-LINE DIAGRAM ON SHEET E-402 FOR DISCONNECT SIZES ON EXTERIOR WALL.
9	PROVIDE WALL MOUNTED JUNCTION BOX AND CONDUIT BACK TO ELECTRICAL ROOM FOR IRRIGATION SYSTEM POWER. CONTRACTOR TO COORDINATE EXACT LOCATION OF IRRIGATION CONTROLLER.
10	DUPLEX RECEPTACLE MOUNTED TO UNDERSIDE OF LADDER TRAY. REFER TO T-502 FOR INSTALLATION DETAIL.
11	RECEPTACLES AT ISLAND TO BE INSTALLED 3'-2" AFF. COORDINATE WITH ARCHITECTURAL PLANS FOR EXACT LOCATION
12	CIRCUIT TO BE RUN BELOW SLAB INTO FLOOR BOX.
13	RECEPTACLES ABOVE DOOR TO BE INSTALLED 96" AFF. COORDINATE WITH ARCHITECTURAL PLANS FOR EXACT LOCATION

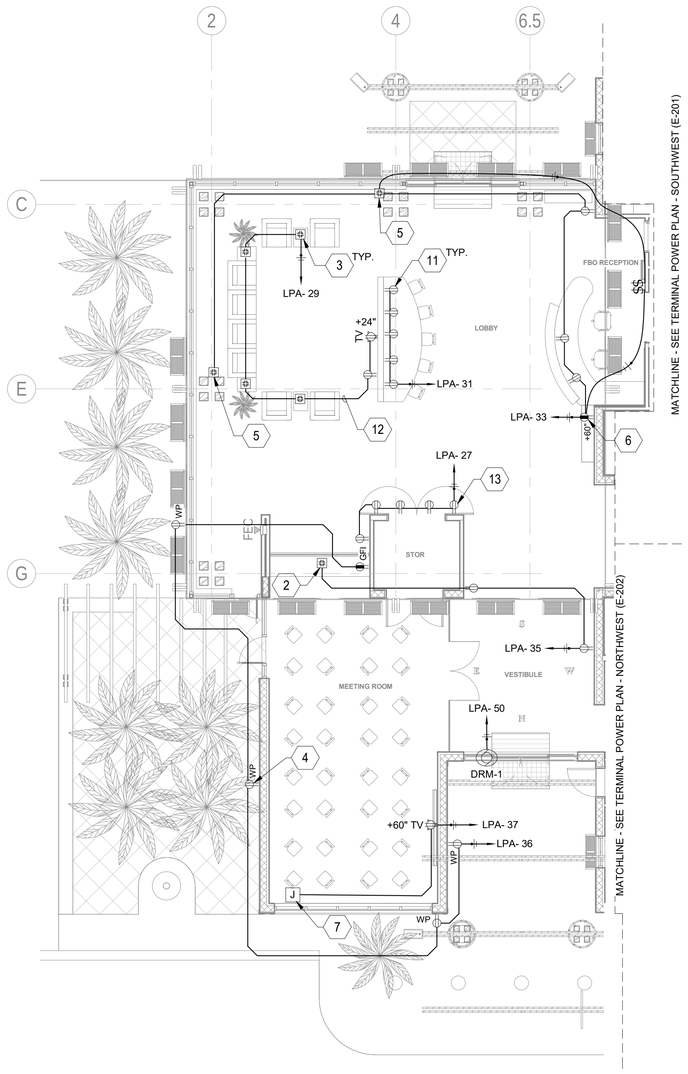

4 TERMINAL POWER PLAN - EAST
1/8" = 1'-0"

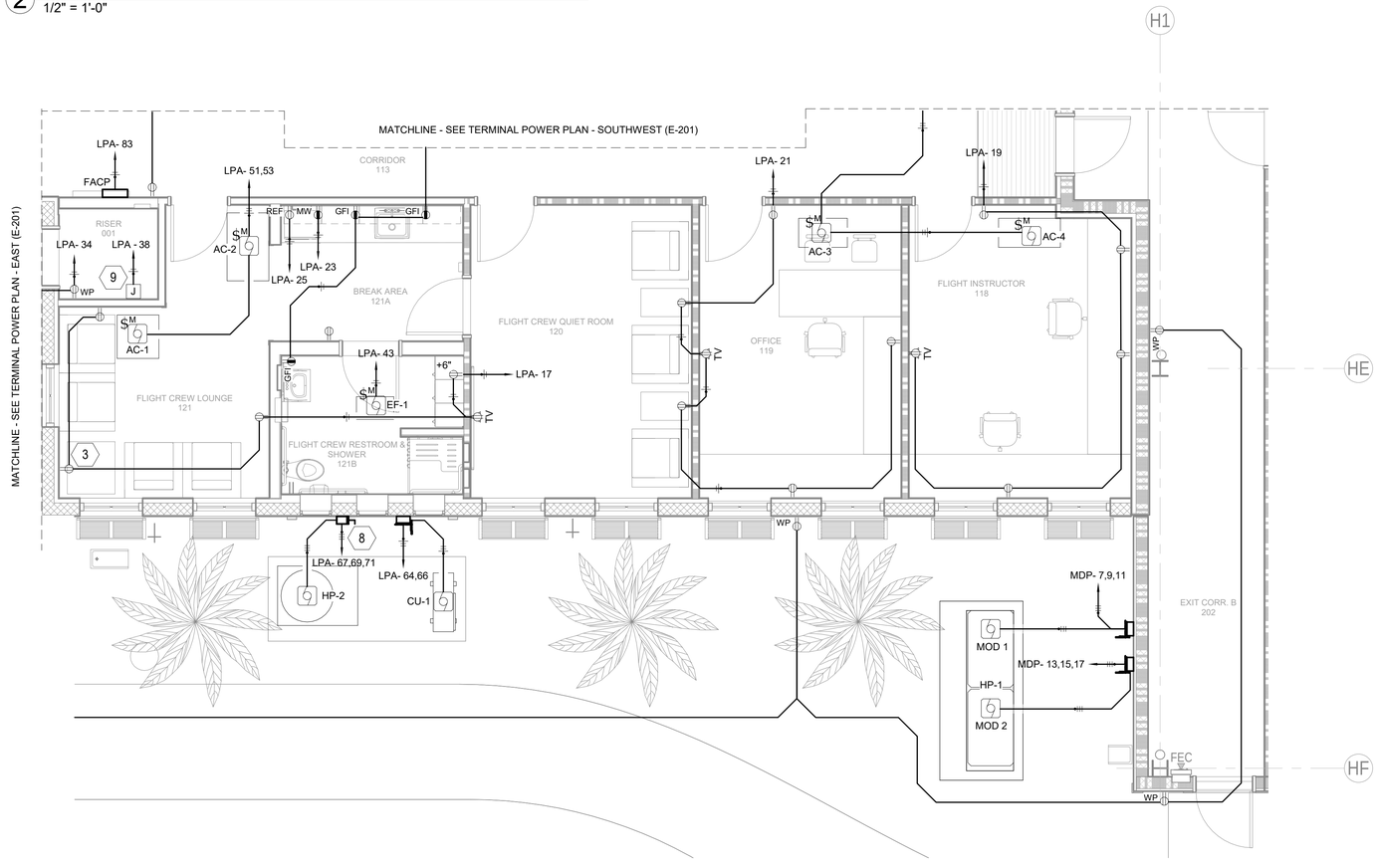

1 TERMINAL POWER PLAN - NORTHWEST
1/4" = 1'-0"

FOR PERMIT & BIDDING ONLY

AVCON
TRANSFORMING TODAY'S IDEAS INTO TOMORROW'S REALITY

NORTH

RICHARD CREAVALLE, P.E.
FL LICENSE NO.:59885
FBPR CERTIFICATE OF AUTHORIZATION NO. 5057

NO.	DATE	REVISION	BY

TERMINAL POWER PLAN

RELEASE FOR BID

AIRPORT TERMINAL AND HANGAR DEVELOPMENT

PREPARED FOR
DEFUNIAK SPRINGS MUNICIPAL AIRPORT

DESIGNED BY:	FB
DRAWN BY:	FB
CHECKED BY:	KB
APPROVED BY:	RC
PROJECT NO:	2019.028.01
DATE:	November 1, 2021

SHEET NUMBER
E-202

THIS DOCUMENT CONTAINS PRIVILEGED AND PROPRIETARY INFORMATION, ALL OF WHICH IS EXPRESSLY PROVIDED BY AVCON, INC., FOR USE BY THE INTENDED RECIPIENT, AND FOR A SPECIFIC PURPOSE; WITHOUT THE EXPRESS WRITTEN CONSENT OF AVCON, INC. ANY DISTRIBUTION, REPRODUCTION, OR OTHER USE OF THIS DOCUMENT, IN WHOLE OR IN PART, IS STRICTLY PROHIBITED.

ELECTRICAL KEY NOTES (X)

1	AIRCRAFT GROUNDING LUG. SEE SHEET LP-501 FOR DETAILS.
2	BOND TO BUILDING STEEL. SEE SHEET LP-501 FOR DETAILS.
3	#2/0 BARE COPPER BONDING CONDUCTOR.
4	B.A.F. CONTROLLER SHUT DOWN RELAY, COORDINATE WITH MECHANICAL PLANS FOR DETAILS AND EXACT LOCATION OF CONTROLLER.
5	HANGAR DOOR CONTROL SHUT DOWN RELAY.
6	AIRCRAFT EXCLUSION ZONE AS REQUIRED BY NFPA 70, 513, 3C. CONTRACTOR SHALL USE YELLOW EPOXY PAINT TO CREATE THE EXCLUSION ZONE AS INDICATED ON PLANS. THE ZONE SHALL EXTEND FROM THE FACE OF THE STRUCTURAL STEEL OUT TO A POINT 5'-0" FROM THE INNER FACE OF THE BEAM.
7	50' CORD REEL WITH GF/WP TWIST LOCK RECEPTACLE. LARSON ELECTRONICS #EPLRT-50-HR.
8	PROVIDE AND INSTALL APPLETON ADRE6034-125 3W-4P GROUND POWER UNIT RECEPTACLE. SURFACE MOUNT TO HANGAR WALL.
9	PROVIDE 2#10, 1#10G CONDUCTORS FOR CIRCUITS SERVING UNIT HEATERS EUH-1,2,3,4.
10	PROVIDE 2#8, 1#8G CONDUCTORS FOR CIRCUITS SERVING UNIT HEATERS EUH-5,6,7,8.

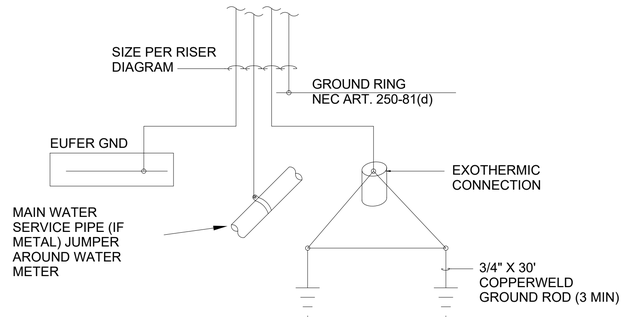

3 SERVICE GROUNDING DETAIL
1/64" = 1'-0"

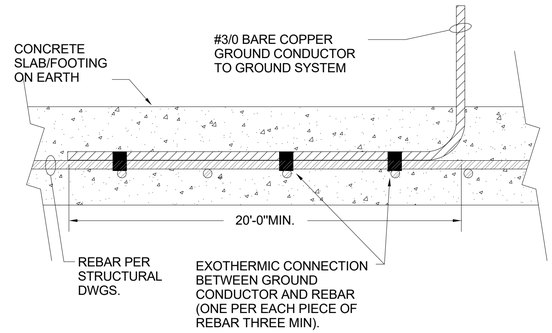

4 UFER GROUNDING DETAIL
1" = 80'-0"

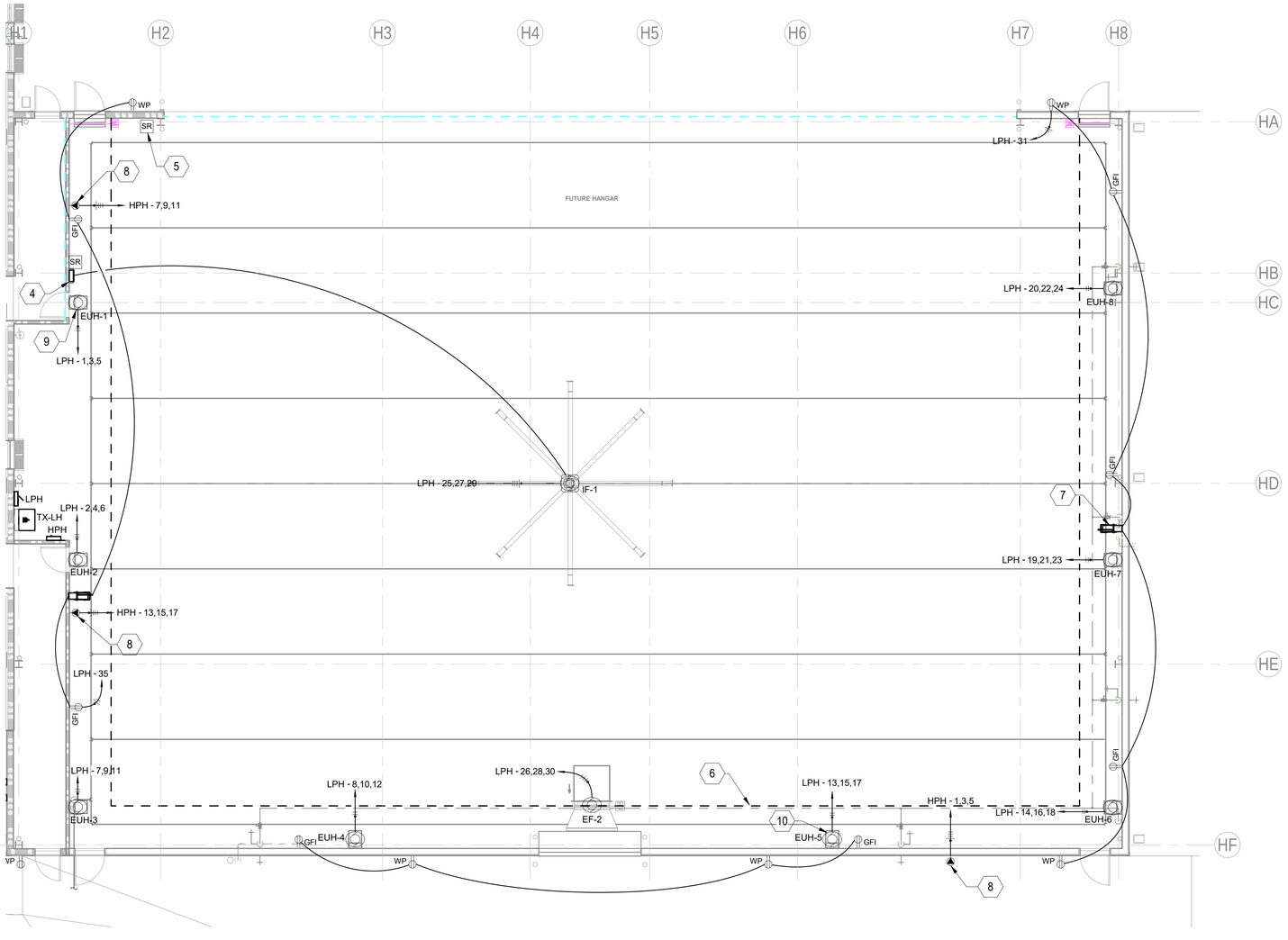

1 HANGAR POWER PLAN
1/8" = 1'-0"

GROUNDING SYMBOL LEGEND

	AIRCRAFT GROUNDING LUG. SEE DETAIL 1 ON SHEET LP-501.
	#2/0 BARE COPPER BONDING CONDUCTOR (UNDERGROUND)
	GROUND RING (UNDERGROUND) HARGER CAT.# 29 - 29 STRAND S OF 16 GA COPPER LIGHTING PROTECTION CONDUCTOR.
	GROUND ROD HARGER CAT.# 5810 - 5/8" x10'-0" COPPER CLAD STEEL GROUND ROD. 25 OHMS IMPEDANCE MAXIMUM. SEE DETAIL 11 ON SHEET LP-501.

GROUNDING SYSTEM SHALL BE UL OR LPI INSTECTED.

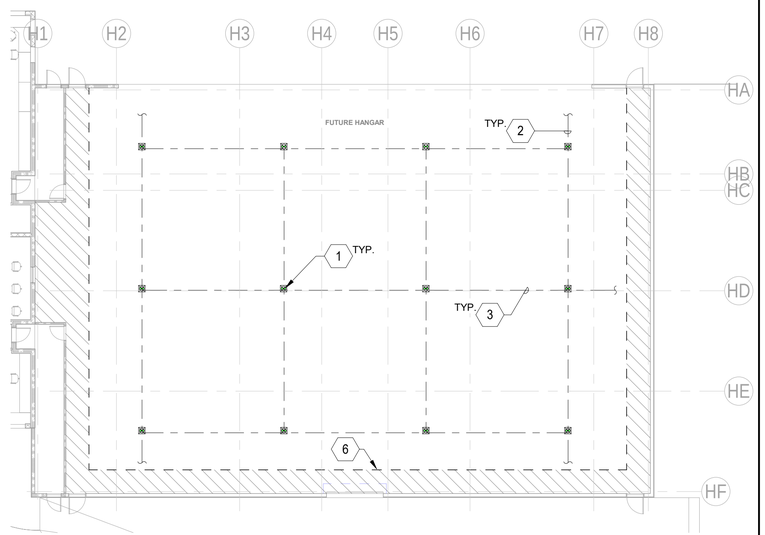

2 HANGAR GROUNDING PLAN
1/16" = 1'-0"

FOR PERMIT & BIDDING ONLY

AVCON
TRANSFORMING TODAY'S IDEAS INTO TOMORROW'S REALITY

NORTH

RICHARD CREAVALLE, P.E.
FL LICENSE NO.:59885
FBPR CERTIFICATE OF AUTHORIZATION NO. 5057

NO.	DATE	REVISION	BY

HANGAR POWER & GROUNDING PLANS

RELEASE FOR BID

AIRPORT TERMINAL AND HANGAR DEVELOPMENT

PREPARED FOR

DEFUNIAK SPRINGS MUNICIPAL AIRPORT

DESIGNED BY:	FB
DRAWN BY:	FB
CHECKED BY:	KB
APPROVED BY:	RC
PROJECT NO:	2019.028.01
DATE:	November 1, 2021

SHEET NUMBER

E-203

THIS DOCUMENT CONTAINS PRIVILEGED AND PROPRIETARY INFORMATION, ALL OF WHICH IS EXPRESSLY PROVIDED BY AVCON, INC., FOR USE BY THE INTENDED RECIPIENT, AND FOR A SPECIFIC PURPOSE. WITHOUT THE EXPRESS WRITTEN CONSENT OF AVCON, INC. ANY DISTRIBUTION, REPRODUCTION, OR OTHER USE OF THIS DOCUMENT, IN WHOLE OR IN PART, IS STRICTLY PROHIBITED.

LIGHTING CONTROL KEY NOTES (X)

1	CAT-5e DATA CABLE WITH RJ45 CONNECTORS TERMINATED TO T568B STANDARD. CABLE SHALL BE FULLY TESTED AFTER TERMINATION, PRIOR TO CONNECTING DEVICES.
2	LightLEEDer RELAY CONTROL PANEL LL-48, QTY 48 R40-1 SINGLE POLE RELAYS AND QTY 2 LSOS8I-P.
3	LightSync PHOTOCELL CONTROLLER & REMOTELY MOUNTED SENSOR HEAD. PROVIDE 3-#18 AWG MIN. FROM SENSOR TO CONTROLLER.
4	LightSync G3 DATALINE SWITCH DEVICE. VERIFY QUANTITY OF BUTTONS PER STATION WITH ARCHITECT/OWNER.
5	OCCUPANCY SENSORS INPUT TO LSOS8I-P PROVIDE 3-#18 AWG MIN. FROM SENSOR TO CONTROLLER.
6	PSR/PS, POWER SUPPLY REPEATER, SEE ID0607, PD0608, ID0608, PD0609 & TB1408. VERIFY QUANTITY AND LOCATION.

GENERAL NOTES

1. LIGHTING CONTROL RISER DIAGRAM FOR TERMINAL BUILDING ONLY. LIGHTS IN HANGAR TO BE CONTROLLED BY SWITCHES SHOWN IN HANGAR LIGHTING PLAN ON SHEET E-103.
2. CONTRACTOR TO PROVIDE CAT-5 DATA CABLE. SEE CAT-5 REQUIREMENTS SHEET & RJ45 CONNECTOR DETAIL. TEST ALL CABLE LENGTHS AND TERMINATIONS W/CAT-5 TESTER.
3. ALL LOW VOLTAGE COMMUNICATION CABLE & HARDWIRE LOW VOLTAGE CONTROL WIRING TO BE INSTALLED PER NATIONAL ELECTRICAL CODE FOR CLASS-2 LOW VOLTAGE WIRING.
4. CLASS-2 LOW VOLTAGE WIRING SHALL NOT BE MIXED WITH OR RUN IN LINE VOLTAGE RACEWAYS. SEPARATE LOW VOLTAGE RUNS FROM LINE VOLTAGE BY A MINIMUM DISTANCE OF 1-FOOT.
5. CAT-5 DATA CABLE RUNS TO BE INSTALLED IN A DAISY CHAIN FROM ONE PANEL OR DEVICE TO THE NEXT. NO "STAR" OR "T" CONFIGURATIONS ALLOWED WITHOUT POWER SUPPLY REPEATERS.
6. ALL CLASS-2 & CAT-5 DATA CABLE RUNS TO BE PROVIDED AND INSTALLED WITH THE APPROPRIATE JACKET TYPE OR CONDUIT FOR THE INSTALLATION ENVIRONMENT OR CONDITIONS ON SITE.
7. EACH LIGHTING RELAY PANEL AND PSR REQUIRES A DEDICATED 120V OR 277V CIRCUIT FOR CONTROL POWER TRANSFORMERS.
8. ADDITIONAL ILC POWER OR DATA REPEATING DEVICES MAY BE REQUIRED FOR PROPER SYSTEM OPERATION, BASED ON THE ACTUAL NUMBER AND DISTANCE OF LightSync DEVICES TO BE INSTALLED ON CAT-5 DATA LINE.
9. ANY UNDERGROUND CABLE RUNS CONNECTING ILC EQUIPMENT MUST BE RUN WITH FIBER OPTIC CABLE & RS485 CONVERTERS OR THE INSTALLATION WILL VOID ILC'S WARRANTY.
10. SYSTEM IS DESIGNED TO MEET FLORIDA ENERGY CODE SIXTH EDITION USING TIME CLOCK AND OCCUPANCY CONTROL AND TIME SCHEDULING.
11. OUTDOOR PHOTOCELL CONTROL FOR EXTERIOR LIGHTS

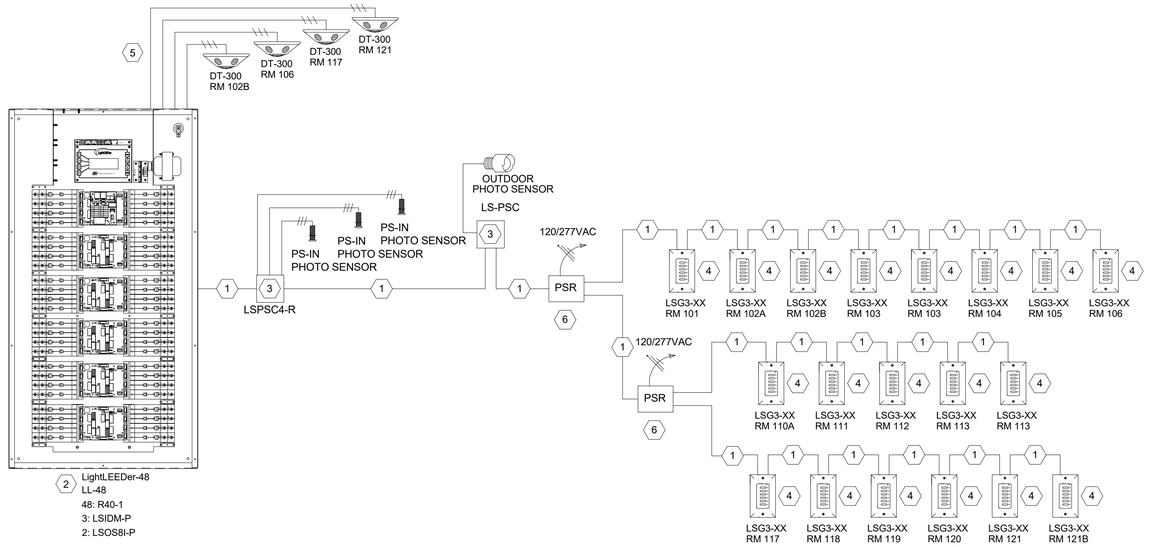

1 LIGHTING CONTROL PANEL (LCP) & RISER DIAGRAM
1 1/2" = 1'-0"

FOR PERMIT & BIDDING ONLY

AVCON
TRANSFORMING TODAY'S IDEAS INTO TOMORROW'S REALITY

RICHARD CREAVALLE, P.E.
FL LICENSE NO.:59885
FBPR CERTIFICATE OF AUTHORIZATION NO. 5057

NO.	DATE	REVISION	BY

LIGHTING CONTROL RISER DIAGRAM

RELEASE FOR BID

AIRPORT TERMINAL AND HANGAR DEVELOPMENT

PREPARED FOR

DEFUNIAK SPRINGS MUNICIPAL AIRPORT

DESIGNED BY:	FB
DRAWN BY:	FB
CHECKED BY:	KB
APPROVED BY:	RC
PROJECT NO:	2019.028.01
DATE:	November 1, 2021

SHEET NUMBER

E-401

THIS DOCUMENT CONTAINS PRIVILEGED AND PROPRIETARY INFORMATION, ALL OF WHICH IS EXPRESSLY PROVIDED BY AVCON, INC., FOR USE BY THE INTENDED RECIPIENT, AND FOR A SPECIFIC PURPOSE. WITHOUT THE EXPRESS WRITTEN CONSENT OF AVCON, INC. ANY DISTRIBUTION, REPRODUCTION, OR OTHER USE OF THIS DOCUMENT, IN WHOLE OR IN PART, IS STRICTLY PROHIBITED.

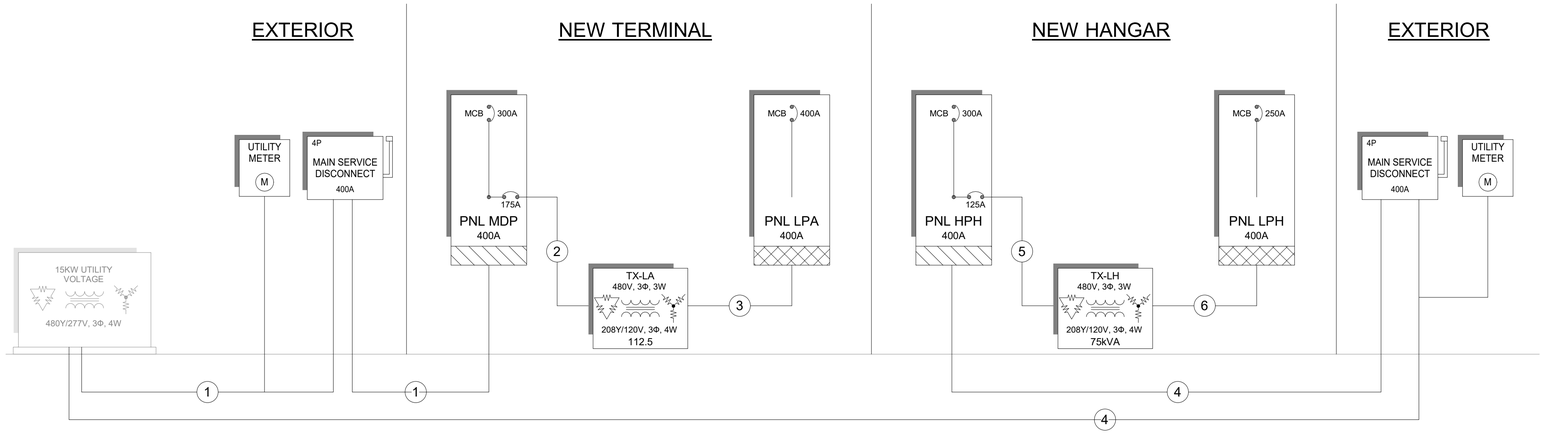

GENERAL NOTES

1. ALL CIRCUITS WITH A 15A OR 20A BREAKERS SHALL USE (2) #12AWG, 1#12 GND IN 3/4" CONDUIT UNLESS NOTED OTHERWISE.
2. 480Y/277V, 3Φ, 4W PANEL
3. 208Y/120V, 3Φ, 4W PANEL

LOAD CALCULATIONS:

		LOAD	DEMAND
RECEPTACLE LOAD:		37.04	
1ST 10 kVA @	100%		10.00
REMAINING LOAD @	50%		13.52
TOTAL RECEPTACLE LOAD:			23.52
LIGHTING LOAD:		12.76	
LIGHTING @	125%	12.76	15.95
TOTAL LIGHTING LOAD:			15.95
MOTOR LOAD:		19.53	
MOTOR LOAD @	100%	19.53	19.53
LARGEST MOTOR LOAD @	25%	17.88	4.47
TOTAL MOTOR LOAD:			24.00
EQUIPMENT LOADS:		210.48	
MECH. EQUIPMENT LOADS:		9.00	
EQUIPMENT LOAD @	100%	219.48	219.48
TOTAL EQUIPMENT LOADS:			219.48
HEAT & A/C LOADS:		141.64	
ELEC. HEATING	100%	141.64	141.64
A/C (NO HEAT)	100%	0.00	0.00
TOTAL HVAC LOADS:			141.64

	(kVA)	(AMPS)
TOTAL CONNECT LOAD:	430.45	517.75
	(kVA)	(AMPS)
TOTAL ESTIMATED SERVICE LOAD:	424.59	510.70

BRANCH PANEL FEEDER SCHEDULE & VOLTAGE DROP CACULATIONS

KEY #	PANEL NAME	FED FROM	VOLTAGE	PHASE	WIRES	FRAME SIZE	MAIN SIZE	MAIN TYPE	kVA	AMPS	WIRE SIZE	CONDUIT
1	PANEL MDP	UTILITY	480Y/277V	3Φ	4W	400A	300A	MCB	208.93	251.30	**4#350, 1#4G**	3"
2	TX-LA	PNLMDP	480VΔ	3Φ	3W	112.5kVA	175A	-	88.35	106.27	**4#2/0, 1#6G**	2"
3	PANEL LPA	TX-LA	208Y/120V	3Φ	4W	400A	400A	MCB	88.35	245.24	**4#500, 1#3G**	3-1/2"
4	PANEL HPH	UTILITY	480Y/277V	3Φ	4W	400A	300A	MCB	224.88	270.49	**4#350, 1#4G**	3"
5	TX-LH	PNL HPH	480VΔ	3Φ	3W	75kVA	125A	-	92.79	111.61	**4#1, 1#6G**	1-1/2"
6	PANEL LPH	TX-LH	208Y/120V	3Φ	4W	400A	250A	MCB	92.79	257.56	**4#250, 1#4G**	2-1/2"

1 POWER RISER DIAGRAM
1/2" = 1'-0"

A SERVICE LOAD CALCS
12" = 1'-0"

PANEL: PANEL MDP — AIC RATING: 35,000
VOLTAGE: 480Y/277V — FRAME: 400A — FED FROM: UTILITY XFMR
MAIN TYPE: 300A MAIN CIRCUIT BREAKER — LOCATION: ELECTRICAL RM 115
PHASE: 3Φ — NEMA RATING: TYPE 1 — BUS TYPE: COPPER
# of WIRES: 4W — MOUNTING: SURFACE — LUG TYPE: BOLT-ON 75°C

	(kVA)	(AMPS)		(kVA)	(AMPS)
TOTAL LOAD PHASE A:	65.04	234.80	ACTUAL CONNECT LOAD:	208.93	251.30
TOTAL LOAD PHASE B:	73.85	266.61	DEMAND LOAD:	211.91	254.89
TOTAL LOAD PHASE C:	68.36	246.79			

LOAD DESCRIPTION	LOAD (kVA) ΦC	ΦB	ΦA	LOAD AMPS	BREAKER C/B TRIP	POLE	CKT #		POLE	C/B TRIP	LOAD AMPS	LOAD (kVA) ΦA	ΦB	ΦC	LOAD DESCRIPTION
			25.24				1	2	1	20A	3	0.92			LTG -
XFMR TX-LA (PNL LPA)		33.78		106	175A	3	3	4	1	20A	1		0.33		LTG -
	29.33						5	6	1	20A	3			0.83	LTG -
			5.27				7	8	1	20A	1	0.14			LTG -
HP1 - MODULE 1		5.27		19	20A	3	9	10	1	20A	4		1.05		LTG -
	5.27						11	12	1	20A	3			0.77	LTG -
			4.16				13	14	1	20A	1	0.21			LTG -
HP1 - MODULE 2		4.16		15	20A	3	15	16	1	20A	4		1.18		LTG -
	4.16						17	18	1	20A	1			0.28	LTG -
			13.86				19	20	1	20A	5	1.38			LTG -
REC - GSE RECEPTACLE 1		13.86		50	70A	3	21	22	1	20A	1		0.36		LCP - LIGHTING CONTROL PANEL
	13.86						23	24	1	20A	-			-	SPARE
			13.86				25	26	1	20A	-	-			SPARE
REC - GSE RECEPTACLE 1		13.86		50	70A	3	27	28	1	20A	-		-		SPARE
	13.86						29	30	1	20A	-			-	SPARE
BLANK SPACE			-	-	-	-	31	32	-	-	-	-			BLANK SPACE
BLANK SPACE		-		-	-	-	33	34	-	-	-		-		BLANK SPACE
BLANK SPACE	-			-	-	-	35	36	-	-	-			-	BLANK SPACE
BLANK SPACE			-	-	-	-	37	38				-			
BLANK SPACE		-		-	-	-	39	40	3	30A	-		-		SPD - SURGE PROTECTION DEVICE
BLANK SPACE	-			-	-	-	41	42						-	
TOTALS	66.48	70.93	62.39									2.65	2.92	1.88	TOTALS

PANEL SCHEDULE NOTES:
1. CONTRACTOR SHALL VERIFY CB ARE SIZED AND INSTALLED PER MANUFACTURERS RECOMMENDATIONS

PANEL: PANEL HPH — AIC RATING: 35,000
VOLTAGE: 480Y/277V — FRAME: 400A — FED FROM: MDP
MAIN TYPE: 300A MAIN CIRCUIT BREAKER — LOCATION: ELECTRICAL RM
PHASE: 3Φ — NEMA RATING: TYPE 1 — BUS TYPE: COPPER
# of WIRES: 4W — MOUNTING: SURFACE — LUG TYPE: BOLT-ON 75°C

	(kVA)	(AMPS)		(kVA)	(AMPS)
TOTAL LOAD PHASE A:	74.82	270.11	ACTUAL CONNECT LOAD:	224.88	270.49
TOTAL LOAD PHASE B:	74.14	267.65	DEMAND LOAD:	227.81	274.01
TOTAL LOAD PHASE C:	74.24	268.01			

LOAD DESCRIPTION	LOAD (kVA) ΦC	ΦB	ΦA	LOAD AMPS	BREAKER C/B TRIP	POLE	CKT #		POLE	C/B TRIP	LOAD AMPS	LOAD (kVA) ΦA	ΦB	ΦC	LOAD DESCRIPTION
			13.86				1	2	1	20A	6	1.66			LTG - HANGAR HIGH BAY
REC - GSE EQUIPMENT OUTLET		13.86		50	70A	3	3	4	1	20A	6		1.60		LTG - HANGAR HIGH BAY
	13.86						5	6	1	20A	6			1.66	LTG - HANGAR HIGH BAY
			13.86				7	8	1	20A	1	0.41			LTG - EXTERIOR APRON SIDE
REC - GSE EQUIPMENT OUTLET		13.86		50	70A	3	9	10	1	20A	1		0.15		LTG - EXTERIOR WALL PACK
	13.86						11	12	1	20A	1			0.19	LTG - EXTERIOR WALL PACK
			13.86				13	14	1	20A	-	-			SPARE
REC - GSE EQUIPMENT OUTLET		13.86		50	70A	3	15	16	1	20A	-		-		SPARE
	13.86						17	18	1	20A	-			-	SPARE
SPARE			-	-	20A	1	19	20	1	20A	-	-			SPARE
SPARE		-		-	20A	1	21	22	1	20A	-		-		SPARE
SPARE	-			-	20A	1	23	24	1	20A	-			-	SPARE
			31.17				25	26							
XFMR TX-LH		30.81		112	125A	3	27	28	3	30A	-		-		SPD - SURGE PROTECTION DEVICE
	30.81						29	30						-	
BLANK SPACE			-	-	-	-	31	32	-	-	-	-			BLANK SPACE
BLANK SPACE		-		-	-	-	33	34	-	-	-		-		BLANK SPACE
BLANK SPACE	-			-	-	-	35	36	-	-	-			-	BLANK SPACE
BLANK SPACE			-	-	-	-	37	38	-	-	-	-			BLANK SPACE
BLANK SPACE		-		-	-	-	39	40	-	-	-		-		BLANK SPACE
BLANK SPACE	-			-	-	-	41	42	-	-	-			-	BLANK SPACE
TOTALS	72.39	72.39	72.75									2.07	1.75	1.85	TOTALS

PANEL SCHEDULE NOTES:
1. CONTRACTOR SHALL VERIFY CB ARE SIZED AND INSTALLED PER MANUFACTURERS RECOMMENDATIONS

FOR PERMIT & BIDDING ONLY

AVCON
TRANSFORMING TODAY'S IDEAS INTO TOMORROW'S REALITY

THIS DOCUMENT CONTAINS PRIVILEGED AND PROPRIETARY INFORMATION. ALL OF WHICH IS EXPRESSLY PROVIDED BY AVCON, INC., FOR USE BY THE INTENDED RECIPIENT, AND FOR A SPECIFIC PURPOSE, WITHOUT THE EXPRESS WRITTEN CONSENT OF AVCON, INC., ANY DISTRIBUTION, REPRODUCTION, OR OTHER USE OF THIS DOCUMENT, IN WHOLE OR IN PART, IS STRICTLY PROHIBITED.

RICHARD CREAVALLE, P.E.
FL LICENSE NO.:59885
FBPR CERTIFICATE OF AUTHORIZATION NO. 5057

NO.	DATE	REVISION	BY
1	05/14/2021	Addendum No. 1	AR/FB

POWER ONE-LINE DIAGRAM

RELEASE FOR BID

AIRPORT TERMINAL AND HANGAR DEVELOPMENT

PREPARED FOR
DEFUNIAK SPRINGS MUNICIPAL AIRPORT

DESIGNED BY: FB
DRAWN BY: FB
CHECKED BY: KB
APPROVED BY: RC
PROJECT NO: 2019.028.01
DATE: November 1, 2021

SHEET NUMBER
E-402

SECTION 1

PANEL: PANEL LPA — AIC RATING: 35,000
VOLTAGE: 208Y/120V — FRAME: 400A — FED FROM: MDP
MAIN TYPE: 400A MAIN CIRCUIT BREAKER — LOCATION: ELECTRICAL RM
PHASE: 3Φ — NEMA RATING: TYPE 1 — BUS TYPE: COPPER
# of WIRES: 4W — MOUNTING: SURFACE — LUG TYPE: BOLT-ON 75°C

	(kVA)	(AMPS)
TOTAL LOAD PHASE A:	13.58	113.17
TOTAL LOAD PHASE B:	12.94	107.83
TOTAL LOAD PHASE C:	11.47	95.58

	(kVA)	(AMPS)
SECTION 1 CONN LOAD:	37.99	105.45
SECTION 2 CONN LOAD:	50.36	139.79
TOTAL CONN LOAD:	91.71	254.56
TOTAL DEMAND LOAD:	85.14	236.33

LOAD DESCRIPTION	LOAD (kVA) ΦC	ΦB	ΦA	LOAD AMPS	BREAKER C/B TRIP	POLE	CKT #		POLE	BREAKER C/B TRIP	LOAD AMPS	LOAD (kVA) ΦA	ΦB	ΦC	LOAD DESCRIPTION
REC - OFFICE 104, 105			1.08	9.00	20A	1	1	2	1	20A	8.50	1.02			REC - RM 102B, 103, 110A, 110B
REC - RM 102B COPIER		0.54		4.50	20A	1	3	4	1	20A	10.00		1.20		REC - RM 110A, 110B
REC - FBO LINE CREW SERVICE	1.08			9.00	20A	1	5	6	1	20A	10.50			1.26	REC - GFCI, EXTERIOR WEATHER PRF
DISHWASHER			1.20	10.00	20A	1	7	8	1	20A	12.50	1.50			REC - BUILT-IN OVEN/MICROWAVE
DISPOSAL		1.92		16.00	20A	1	9	10	1	20A	12.50		1.50		REC - BUILT-IN OVEN/MICROWAVE
REC - CORRIDOR, FBO LINE CREW	0.72			6.00	20A	1	11	12	1	20A	2.50			0.30	REC - REFRIGERATOR
REC - GFCI, RESTROOM			0.90	7.50	20A	1	13	14	1	20A	7.50	0.90			REC - FLIGHT CATERING STAGING
REC - SECURED STORAGE/SERVER		0.72		6.00	20A	1	15	16	1	20A	7.50		0.90		REC - FLIGHT CATERING STAGING
REC - FLIGHT CREW LOUNGE	1.20			10.00	20A	1	17	18	1	20A	9.00			1.08	REC - STUDENT FLIGHT PLANNING
REC - FLIGHT INSTRUCTOR			1.02	8.50	20A	1	19	20	1	20A	7.50	0.90			REC - ELEC, MECH RM
REC - OFFICE 119, 120		1.20		10.00	20A	1	21	22	1	20A	8.33		1.00		REC - SERVER CABINET
REC - MICROWAVE BREAK AREA	1.50			12.50	20A	1	23	24	1	20A	4.50			0.54	REC - TERMINAL BACKER BOARD
REC - REFRIGERATOR BREAK RM			0.30	2.50	20A	1	25	26	1	20A	15.33	1.84			REC - VENDING MACHINES
REC - LOBBY / VESTIBULE		0.90		7.50	20A	1	27	28	1	20A	6.00		0.72		REC - BREAK AREA, FLIGHT CREW
REC - LOBBY / VESTIBULE	1.92			16.00	20A	1	29	30	1	20A	2.08			0.25	REC - ATM MACHINE
REC - LOBBY TV, COUNTER			0.90	7.50	20A	1	31	32	1	20A	3.00	0.36			REC - CORRIDOR, JAN
REC - LOBBY RECEPTION AREA		1.44		12.00	20A	1	33	34	1	20A	7.50		0.90		REC - CORRIDOR, ENTRANCE
REC- LOBBY	0.72			6.00	20A	1	35	36	1	20A	7.50			0.90	REC - GFCI, EXTERIOR WEATHER PRF
REC - TV & PROJECTOR BOX			1.31	10.92	20A	1	37	38	1	20A	2.92	0.35			IRRIGATION SYSTEM BOX
SPARE		-		-	20A	1	39	40	1	20A	-		-		SPARE
SPARE	-			-	20A	1	41	42	1	20A	-			-	SPARE
TOTALS	7.14	6.72	6.71									6.87	6.22	4.33	TOTALS

PANEL SCHEDULE NOTES:
1. CONTRACTOR SHALL VERIFY CB ARE SIZED AND INSTALLED PER MANUFACTURERS RECOMMENDATIONS

SECTION 2

PANEL: PANEL LPA — AIC RATING: 35,000
VOLTAGE: 208Y/120V — FRAME: 400A — FED FROM: MDP
MAIN TYPE: 400A MAIN CIRCUIT BREAKER — LOCATION: ELECTRICAL RM
PHASE: 3Φ — NEMA RATING: TYPE 1 — BUS TYPE: COPPER
# of WIRES: 4W — MOUNTING: SURFACE — LUG TYPE: BOLT-ON 75°C

	(kVA)	(AMPS)
TOTAL LOAD PHASE A:	11.66	97.17
TOTAL LOAD PHASE B:	20.84	173.67
TOTAL LOAD PHASE C:	17.86	148.83

	(kVA)	(AMPS)
SECTION 2 CONN LOAD:	50.36	139.79

*CONTRACTOR SHALL VERIFY CB ARE SIZED AND INSTALLED PER MANUFACTURERS RECOMMENDATIONS

LOAD DESCRIPTION	LOAD (kVA) ΦC	ΦB	ΦA	LOAD AMPS	BREAKER C/B TRIP	POLE	CKT #		POLE	BREAKER C/B TRIP	LOAD AMPS	LOAD (kVA) ΦA	ΦB	ΦC	LOAD DESCRIPTION
EF-1 EXHAUST FAN			1.66	14	20A	1	43	44	1	20A	4	0.50			CEILING FAN
CEILING FAN		0.25		2	20A	1	45	46	1	20A	6		0.75		CEILING FAN
CEILING FAN	0.25			2	20A	1	47	48	1	20A	25			3.00	CEILING FAN
CEILING FAN			0.50	4	20A	1	49	50	1	20A	3	0.35			CEILING FAN
HVAC - AC-1, AC-2		0.33		3	20A	1	51	52	1	20A	1		0.15		HVAC - AC-3, AC-4, AC-5
-	0.33			3	20A	1	53	54	1	20A	1			0.15	-
HVAC - AC-6, AC-7			1.38	12	20A	1	55	56	1	20A	2	0.25			HVAC - AC-8, AC-9
-		1.38		12	20A	1	57	58	1	20A	2		0.25		-
HVAC - AC-10, AC-11	0.10			1	20A	1	59	60	1	20A	1			0.13	HVAC - AC-12
-			0.10	1	20A	1	61	62	1	20A	1	0.13			-
HVAC - DOAS-1		8.94		75	90A	1	63	64	1	30A	17		2.00		HVAC - CU-1
-	8.94			75	20A	1	65	66	1	20A	17			2.00	-
HVAC - HP2 OUTDOOR COND UNIT			2.29	19	40A	1	67	68	1	50A	38	4.50			EWH - ELECTRIC WATER HEATER
-		2.29		19	20A	1	69	70	1	20A	38		4.50		-
-	2.29			19	20A	1	71	72	1	20A	0.00			0.00	SPARE
SPARE			0.00	0.00	20A	1	73	74	1	20A	0.00	0.00			SPARE
SPARE		0.00		0.00	20A	1	75	76	1	20A	0.00		0.00		SPARE
SPARE	0.00			0.00	20A	1	77	78	1	20A	0.00			0.00	SPARE
SPARE			0.00	0.00	20A	1	79	80	1	20A	0.00	0.00			SPARE
SPARE		0.00		0.00	20A	1	81	82	1	20A	0.00		0.00		SPARE
FACP	0.67			5.58	20A	1	83	84	1	20A	0.00			0.00	SPARE
TOTALS	12.58	13.19	5.93									5.73	7.65	5.28	TOTALS

PANEL SCHEDULE NOTES:
1. CONTRACTOR SHALL VERIFY CB ARE SIZED AND INSTALLED PER MANUFACTURERS RECOMMENDATIONS

PANEL LPH

PANEL: PANEL LPH — AIC RATING: 35,000
VOLTAGE: 208Y/120V — FRAME: 400A — FED FROM: MDP
MAIN TYPE: 250A MAIN CIRCUIT BREAKER — LOCATION: ELECTRICAL RM
PHASE: 3Φ — NEMA RATING: TYPE 1 — BUS TYPE: COPPER
# of WIRES: 4W — MOUNTING: SURFACE — LUG TYPE: BOLT-ON 75°C

	(kVA)	(AMPS)
TOTAL LOAD PHASE A:	31.17	259.75
TOTAL LOAD PHASE B:	30.81	256.75
TOTAL LOAD PHASE C:	30.81	256.75

	(kVA)	(AMPS)
ACTUAL CONNECT LOAD:	94.47	262.22
DEMAND LOAD:	95.98	266.41

LOAD DESCRIPTION	LOAD (kVA) ΦC	ΦB	ΦA	LOAD AMPS	BREAKER C/B TRIP	POLE	CKT #		POLE	BREAKER C/B TRIP	LOAD AMPS	LOAD (kVA) ΦA	ΦB	ΦC	LOAD DESCRIPTION
			3.33				1	2				3.33			
EUH-1		3.33		28	40A	3	3	4	3	40A	28		3.33		EUH-2
	3.33						5	6						3.33	
			3.33				7	8				3.33			
EUH-3		3.33		28	40A	3	9	10	3	40A	28		3.33		EUH-4
	3.33						11	12						3.33	
			3.33				13	14				3.33			
EUH-5		3.33		28	40A	3	15	16	3	40A	28		3.33		EUH-6
	3.33						17	18						3.33	
			3.33				19	20				3.33			
EUH-7		3.33		28	40A	3	21	22	3	40A	28		3.33		EUH-8
	3.33						23	24						3.33	
			1.44				25	26				2.01			
MTR - HANGAR CEILING FAN		1.44		12	40A	3	27	28	3	40A	17		2.01		EF-2
	1.44						29	30						2.01	
REC - INTERIOR HANGAR			1.08	9.00	20A	1	31	32	1	20A	-	-			SPARE
REC - INTERIOR HANGAR		0.72		6.00	20A	1	33	34	1	20A	-		-		SPARE
REC - INTERIOR HANGAR	0.72			6.00	20A	1	35	36	1	20A	-			-	SPARE
SPARE			-	-	20A	1	37	38	1	20A	-	-			SPARE
SPARE		-		-	20A	1	39	40	1	20A	-		-		SPARE
SPARE	-			-	20A	1	41	42	1	20A	-			-	SPARE
TOTALS	15.48	15.48	15.84									15.33	15.33	15.33	TOTALS

PANEL SCHEDULE NOTES:
1. CONTRACTOR SHALL VERIFY CB ARE SIZED AND INSTALLED PER MANUFACTURERS RECOMMENDATIONS

FOR PERMIT & BIDDING ONLY

AVCON
TRANSFORMING TODAY'S IDEAS INTO TOMORROW'S REALITY

RICHARD CREAVALLE, P.E.
FL LICENSE NO.:59885
FBPR CERTIFICATE OF AUTHORIZATION NO. 5057

NO.	DATE	REVISION	BY
1.	05/14/2021	Addendum No. 1	AR/FB

PANEL SCHEDULES

RELEASE FOR BID

AIRPORT TERMINAL AND HANGAR DEVELOPMENT

PREPARED FOR
DEFUNIAK SPRINGS MUNICIPAL AIRPORT

DESIGNED BY: FB
DRAWN BY: FB
CHECKED BY: KB
APPROVED BY: RC
PROJECT NO: 2019.028.01
DATE: November 1, 2021

SHEET NUMBER
E-403

THIS DOCUMENT CONTAINS PRIVILEGED AND PROPRIETARY INFORMATION, ALL OF WHICH IS EXPRESSLY PROVIDED BY AVCON, INC., FOR USE BY THE INTENDED RECIPIENT, AND FOR A SPECIFIC PURPOSE. WITHOUT THE EXPRESS WRITTEN CONSENT OF AVCON, INC., ANY DISTRIBUTION, REPRODUCTION, OR OTHER USE OF THIS DOCUMENT, IN WHOLE OR IN PART, IS STRICTLY PROHIBITED.

SITE PLAN KEY NOTES (X)

1	PROPOSED LOCATION OF 3 PHASE PADMOUNT GULF POWER COMPANY TRANSFORMER.
2	PROVIDE (2) 4" CONDUITS FROM PULL BOX TO BUILDINGS SERVER ROOM FOR TELECOMMUNICATIONS. PROVIDE MAXCELL 3 CELL 2" DIAMETER FABRIC INNER DUCT IN EACH CONDUIT. MODEL # MXC2003 OR APPROVED EQUAL. PROVIDE PULL STRINGS IN EACH CELL. REFER TO INSTALLATION DETAILS FOR DUCT CROSS SECTION AND ENLARGED SERVER ROOM PLAN FOR STUB UP LOCATION.
3	36"X36" TIER 8 RATED COMMUNICATIONS PULL BOX.
4	COORDINATE WITH GULF POWER COMPANY FOR THE INSTALLATION OF TRANSFORMER AND PRIMARY FEEDER.
5	ELECTRIC METER AND MAIN DISCONNECT MOUNTED TO SIDING BENEATH EAVE. REFER TO INSTALLATION DETAILS ON SHEET ES-501 FOR CONNECTION REQUIREMENTS.
6	8"W X 8"L X 18"D (MIN.) PULL BOX (TYP. OF 2). PROVIDE (2) 1" CONDUITS TO GATE JUNCTION BOX FOR POWER AND CONTROL WIRING. POWER CONDUIT TO ELECTRICAL ROOM AND CONTROL CONDUIT TO LOBBY RECEPTION DESK AREA. POWER WIRES SHALL BE 2#6, 1#12G AND CONTROL WIRES SHALL BE 3#12. ALLOW FOR A MAXIMUM DISTANCE OF 350 LINEAR FEET.

GENERAL NOTES

1. REFER TO SHEET E-001 & E-002 FOR SYMBOL LEGEND, ABBREVIATIONS, AND GENERAL NOTES.
2. REFER TO SHEET E-101 FOR EXTERIOR DOWNLIGHTS BENEATH CANOPY ARE LOCATED ON LIGHTING SHEET E-101.
3. REFER TO SHEET E-103 FOR EXTERIOR HANGAR WALL PACKS AND FLOODLIGHTS.

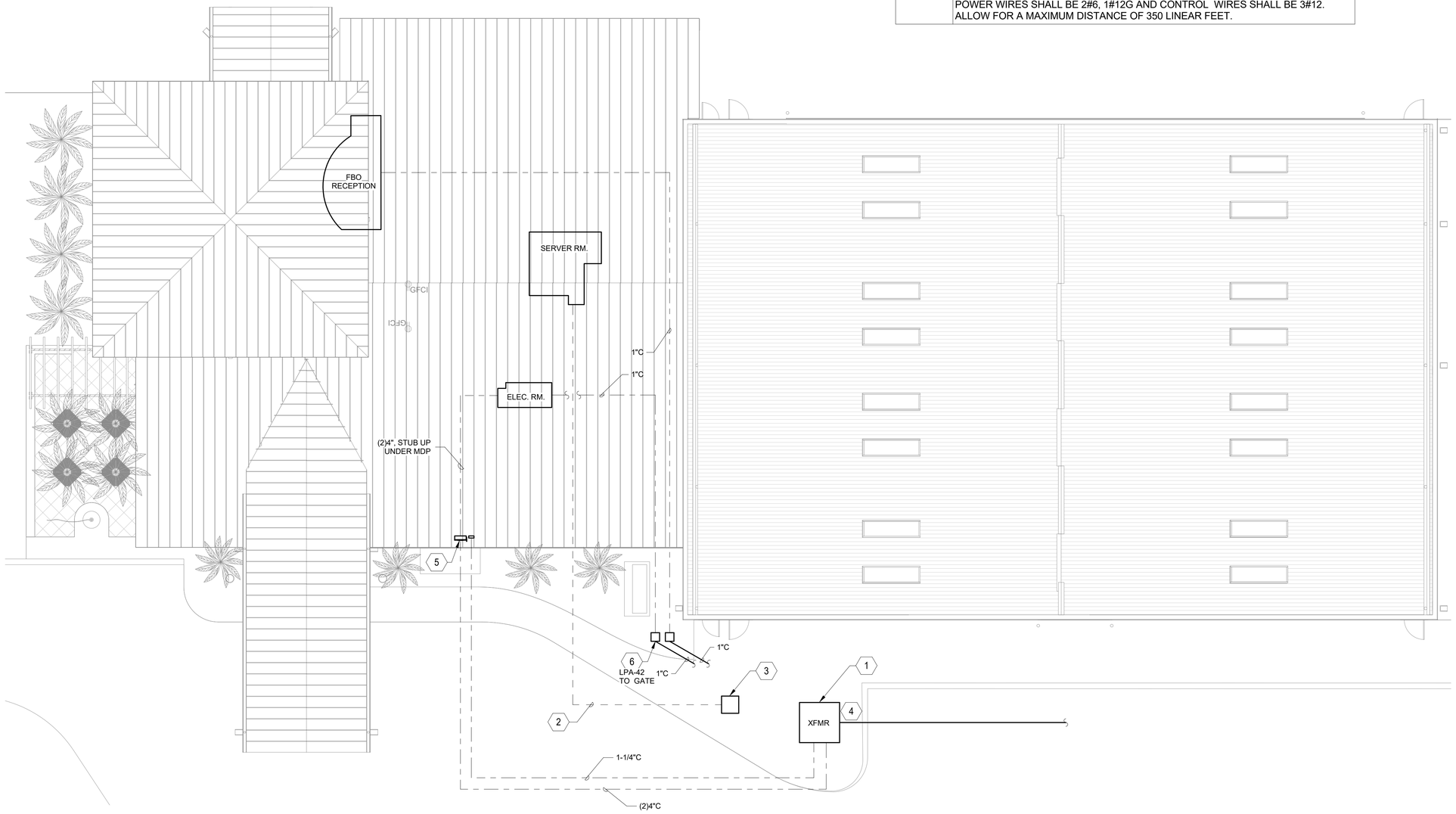

1 ELECTRICAL SITE PLAN
1" = 10'-0"

FOR PERMIT & BIDDING ONLY

AVCON
TRANSFORMING TODAY'S IDEAS INTO TOMORROW'S REALITY

NORTH

RICHARD CREAVALLE, P.E.
FL LICENSE NO.:59885
FBPR CERTIFICATE OF AUTHORIZATION NO. 5057

NO.	DATE	REVISION	BY
1	05/14/2021	Addendum No. 1	AR/FB

ELECTRICAL SITE PLAN

RELEASE FOR BID

AIRPORT TERMINAL AND HANGAR DEVELOPMENT

PREPARED FOR

DEFUNIAK SPRINGS MUNICIPAL AIRPORT

DESIGNED BY:	FB
DRAWN BY:	FB
CHECKED BY:	KB
APPROVED BY:	RC
PROJECT NO:	2019.028.01
DATE:	November 1, 2021

SHEET NUMBER

ES-101

THIS DOCUMENT CONTAINS PRIVILEGED AND PROPRIETARY INFORMATION, ALL OF WHICH IS EXPRESSLY PROVIDED BY AVCON, INC., FOR USE BY THE INTENDED RECIPIENT, AND FOR A SPECIFIC PURPOSE, WITHOUT THE EXPRESS WRITTEN CONSENT OF AVCON, INC. ANY DISTRIBUTION, REPRODUCTION, OR OTHER USE OF THIS DOCUMENT, IN WHOLE OR IN PART, IS STRICTLY PROHIBITED.

GENERAL NOTES

1. FOR WALL MOUNTING, METER SOCKET AND CONDUIT STRAPS SHALL BE FASTENED TO BUILDING USING LEAD ANCHORS (BRICK OR SOLID MASONRY), TOGGLE BOLTS (OTHER MASONRY SIDING) OR WOOD SCREWS (STUDS, SOLID LUMBER). ALL SCREWS AND BOLTS SHALL BE MINIMUM #12 X 1-1/2" CORROSION RESISTANT. A MINIMUM OF FOUR (4) FASTENERS SHALL BE USED TO MOUNT SOCKET.

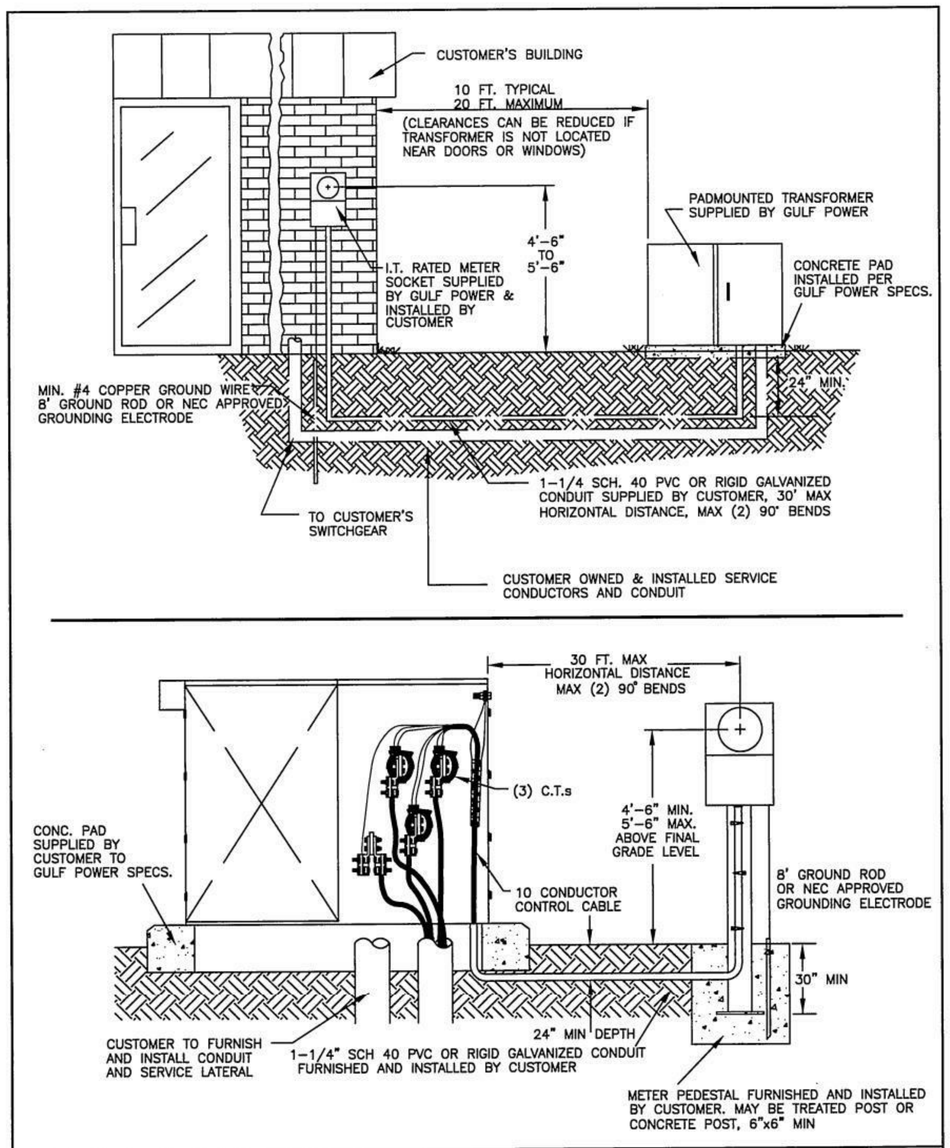

Gulf Power®

DISTRIBUTION SPECIFICATIONS

SUBJECT PADMOUNT TRANSFORMER INSTALLATION

DETAIL SERVICE ONE CUSTOMER

Date 04/02/09 | Plate 59 | File GP0020X

FOR PERMIT & BIDDING ONLY

AVCON

TRANSFORMING TODAY'S IDEAS INTO TOMORROW'S REALITY

RICHARD CREAVALLE, P.E.
FL LICENSE NO.:59885
FBPR CERTIFICATE OF AUTHORIZATION NO. 5057

NO.	DATE	REVISION	BY

TRANSFORMER INSTALLATION DETAILS

RELEASE FOR BID

AIRPORT TERMINAL AND HANGAR DEVELOPMENT

PREPARED FOR

DEFUNIAK SPRINGS MUNICIPAL AIRPORT

DESIGNED BY: FB
DRAWN BY: FB
CHECKED BY: KB
APPROVED BY: RC
PROJECT NO: 2019.028.01
DATE: November 1, 2021

SHEET NUMBER

ES-501

THIS DOCUMENT CONTAINS PRIVILEGED AND PROPRIETARY INFORMATION, ALL OF WHICH IS EXPRESSLY PROVIDED BY AVCON, INC., FOR USE BY THE INTENDED RECIPIENT, AND FOR A SPECIFIC PURPOSE, WITHOUT THE EXPRESS WRITTEN CONSENT OF AVCON, INC. ANY DISTRIBUTION, REPRODUCTION, OR OTHER USE OF THIS DOCUMENT, IN WHOLE OR IN PART, IS STRICTLY PROHIBITED.

GENERAL NOTES

1. ALL DEVICES SHALL BE INSTALLED AT MOUNTING HEIGHTS AS OUTLINED IN ADA, UFC 3-600-01, NFPA AND SHALL BE UL LISTED.
2. ALL DIMENSIONS SHALL BE COORDINATED WITH ARCHITECTURAL DETAILS AND MAY BE ADJUSTED TO CONFORM WITH ARCHITECTURAL REQUIREMENTS AS LONG AS NO CODE RESTRICTIONS ARE VIOLATED.

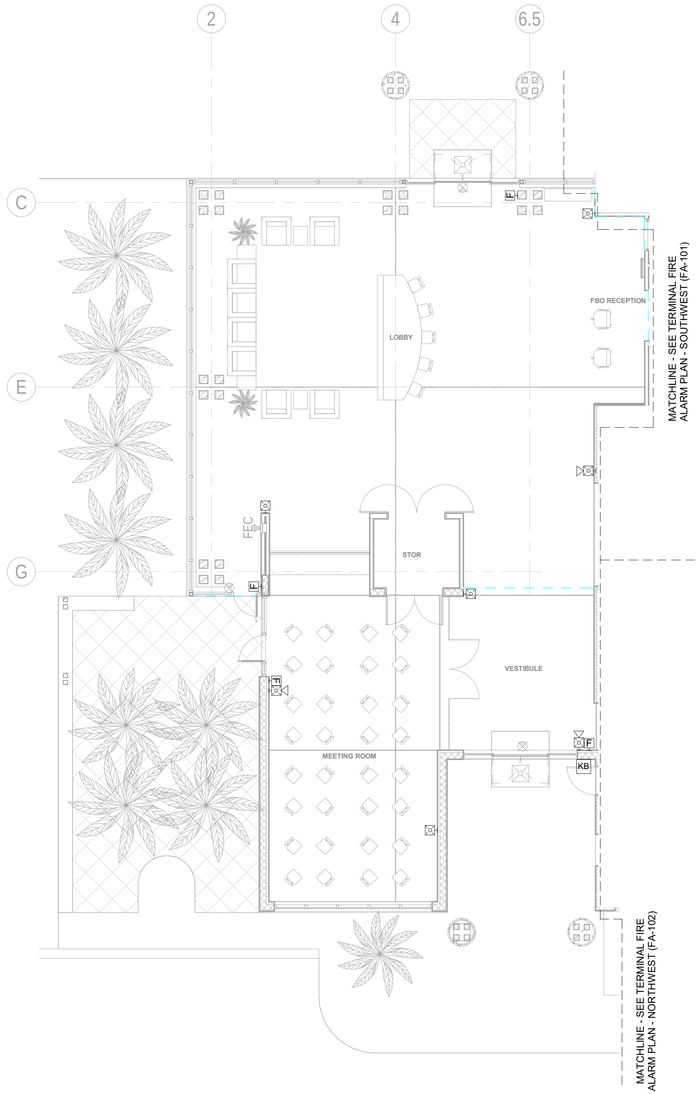

1 TERMINAL FIRE ALARM PLAN - EAST
1/8" = 1'-0"



2 TERMINAL FIRE ALARM PLAN - SOUTHWEST
1/4" = 1'-0"

FOR PERMIT & BIDDING ONLY

AVCON
TRANSFORMING TODAY'S IDEAS INTO TOMORROW'S REALITY

NORTH

RICHARD CREAVALLE, P.E.
FL LICENSE NO.:59885
FBPR CERTIFICATE OF AUTHORIZATION NO. 5057

NO.	DATE	REVISION	BY

TERMINAL FIRE ALARM PLAN

RELEASE FOR BID

AIRPORT TERMINAL AND HANGAR DEVELOPMENT

PREPARED FOR

DEFUNIAK SPRINGS MUNICIPAL AIRPORT

DESIGNED BY:	FB
DRAWN BY:	FB
CHECKED BY:	KB
APPROVED BY:	RC
PROJECT NO:	2019.028.01
DATE:	November 1, 2021

SHEET NUMBER

FA-101

THIS DOCUMENT CONTAINS PRIVILEGED AND PROPRIETARY INFORMATION. ALL OF WHICH IS EXPRESSLY PROVIDED BY AVCON, INC., FOR USE BY THE INTENDED RECIPIENT, AND FOR A SPECIFIC PURPOSE. WITHOUT THE EXPRESS WRITTEN CONSENT OF AVCON, INC., ANY DISTRIBUTION, REPRODUCTION, OR OTHER USE OF THIS DOCUMENT, IN WHOLE OR IN PART, IS STRICTLY PROHIBITED.

GENERAL NOTES

1. ALL DEVICES SHALL BE INSTALLED AT MOUNTING HEIGHTS AS OUTLINED IN ADA, UFC 3-600-01, NFPA AND SHALL BE UL LISTED.
2. ALL DIMENSIONS SHALL BE COORDINATED WITH ARCHITECTURAL DETAILS AND MAY BE ADJUSTED TO CONFORM WITH ARCHITECTURAL REQUIREMENTS AS LONG AS NO CODE RESTRICTIONS ARE VIOLATED.

FIRE ALARM KEY NOTES (X)

1	SUPPLY DUCT SMOKE DETECTOR FOR AC-6.
2	SHUT DOWN RELAY FOR AC-6.

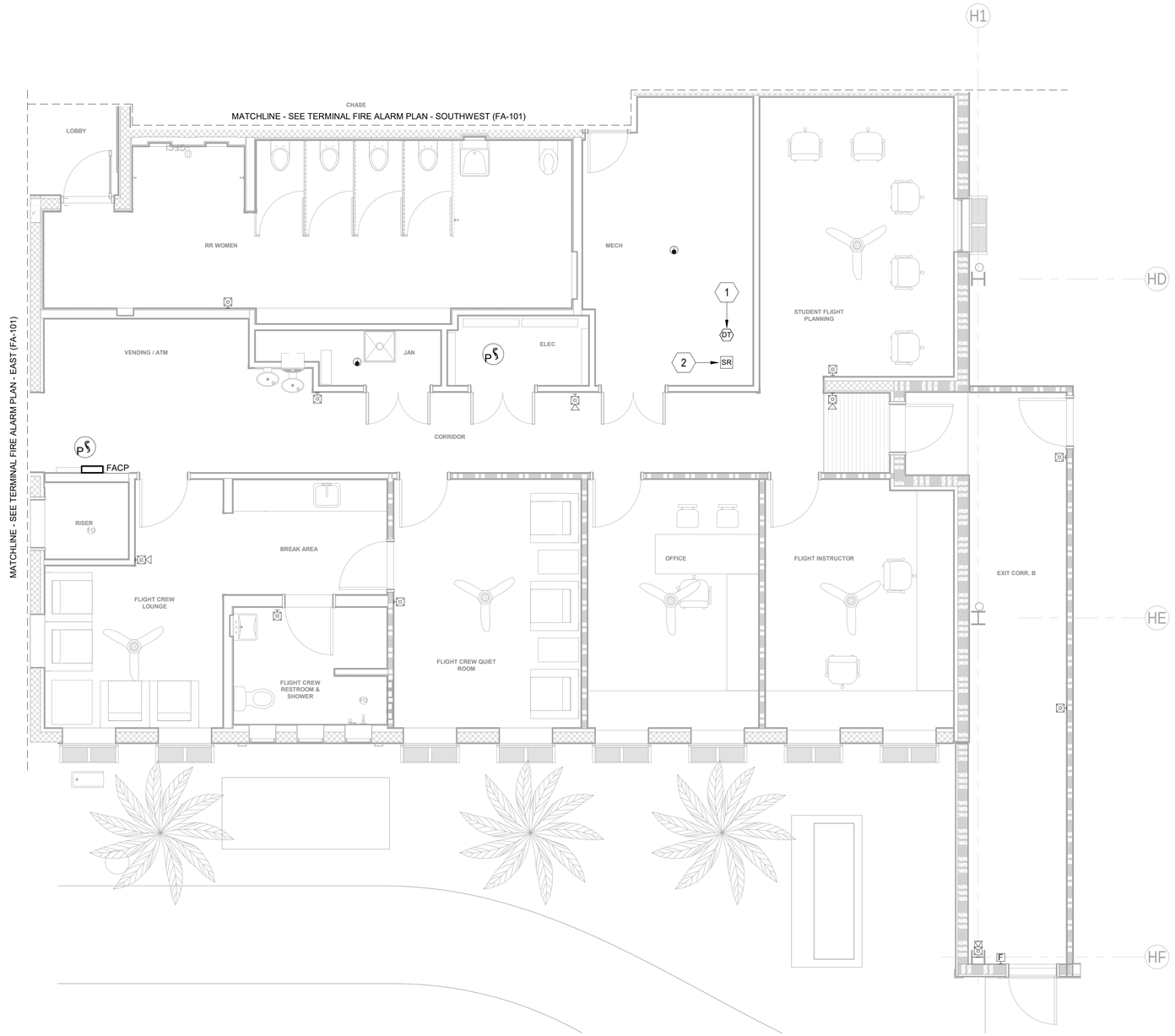

1 TERMINAL FIRE ALARM PLAN - NORTHWEST
1/4" = 1'-0"

FOR PERMIT & BIDDING ONLY

AVCON
TRANSFORMING TODAY'S IDEAS INTO TOMORROW'S REALITY

NORTH

RICHARD CREAVALLE, P.E.
FL LICENSE NO.:59885
FBPR CERTIFICATE OF AUTHORIZATION NO. 5057

NO.	DATE	REVISION	BY

TERMINAL FIRE ALARM PLAN

RELEASE FOR BID

AIRPORT TERMINAL AND HANGAR DEVELOPMENT

PREPARED FOR
DEFUNIAK SPRINGS MUNICIPAL AIRPORT

DESIGNED BY:	FB
DRAWN BY:	FB
CHECKED BY:	KB
APPROVED BY:	RC
PROJECT NO:	2019.028.01
DATE:	November 1, 2021

SHEET NUMBER
FA-102

THIS DOCUMENT CONTAINS PRIVILEGED AND PROPRIETARY INFORMATION, ALL OF WHICH IS EXPRESSLY PROVIDED BY AVCON, INC., FOR USE BY THE INTENDED RECIPIENT, AND FOR A SPECIFIC PURPOSE. WITHOUT THE EXPRESS WRITTEN CONSENT OF AVCON, INC., ANY DISTRIBUTION, REPRODUCTION, OR OTHER USE OF THIS DOCUMENT, IN WHOLE OR IN PART, IS STRICTLY PROHIBITED.

GENERAL NOTES

1. ALL DEVICES SHALL BE INSTALLED AT MOUNTING HEIGHTS AS OUTLINED IN ADA, UFC 3-600-01, NFPA AND SHALL BE UL LISTED.
2. ALL DIMENSIONS SHALL BE COORDINATED WITH ARCHITECTURAL DETAILS AND MAY BE ADJUSTED TO CONFORM WITH ARCHITECTURAL REQUIREMENTS AS LONG AS NO CODE RESTRICTIONS ARE VIOLATED.

FIRE ALARM KEY NOTES (X)

1	B.A.F. CONTROLLER SHUT DOWN RELAY, COORDINATE WITH MECHANICAL PLANS FOR DETAILS AND EXACT LOCATION OF CONTROLLER.
2	HANGAR DOOR CONTROL SHUT DOWN RELAY.
3	AIRCRAFT EXCLUSION ZONE AS REQUIRED BY NFPA 70, 513, 3C. CONTRACTOR SHALL USE YELLOW EPOXY PAINT TO CREATE THE EXCLUSION ZONE AS INDICATED ON PLANS. THE ZONE SHALL EXTEND FROM THE FACE OF THE STRUCTURAL STEEL OUT TO A POINT 5'-0" FROM THE INNER FACE OF THE BEAM.

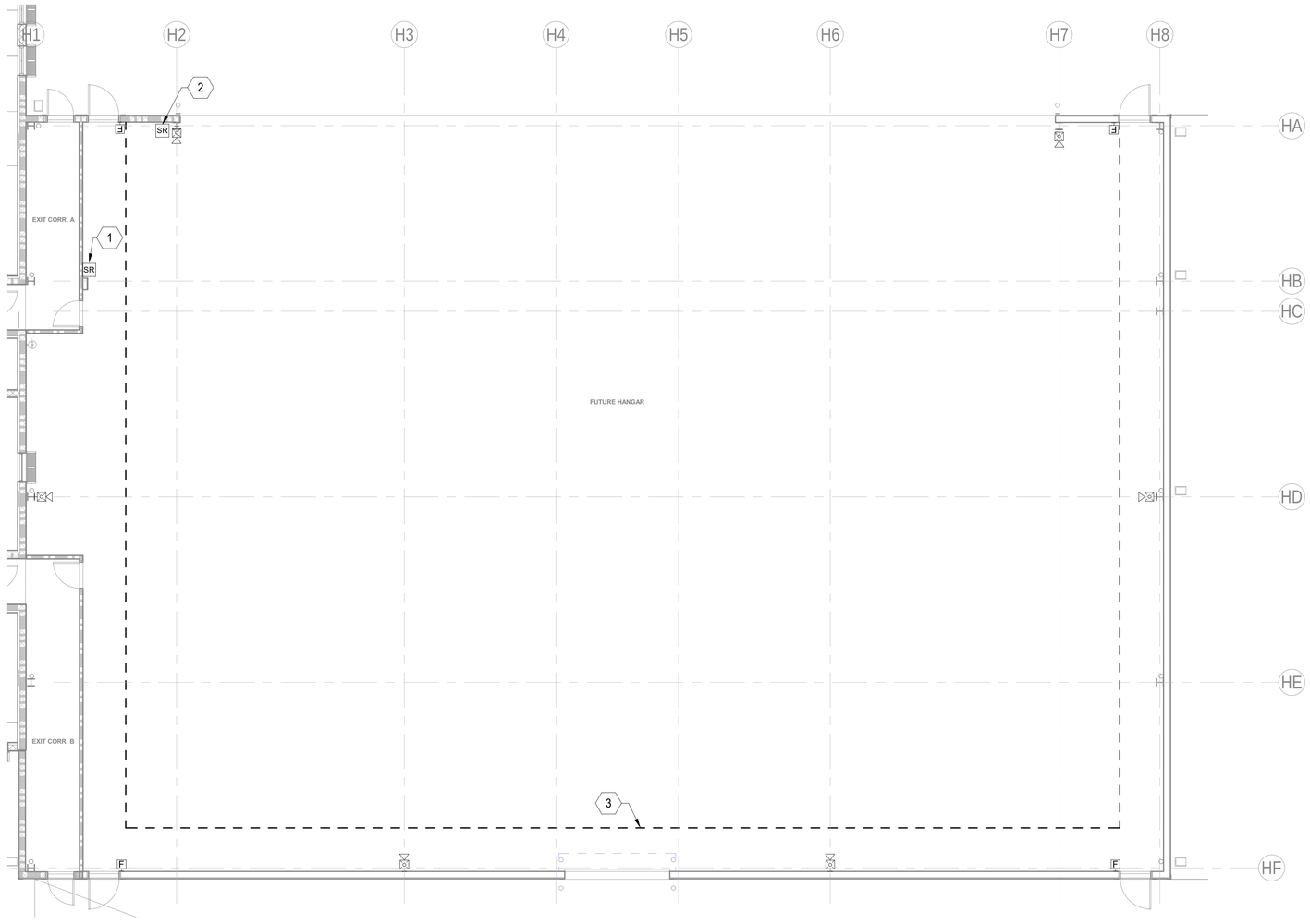

1 HANGAR FIRE ALARM PLAN
1/8" = 1'-0"

FOR PERMIT & BIDDING ONLY

AVCON
TRANSFORMING TODAY'S IDEAS INTO TOMORROW'S REALITY

NORTH

RICHARD CREAVALLE, P.E.
FL LICENSE NO.:59885
FBPR CERTIFICATE OF AUTHORIZATION NO. 5057

NO.	DATE	REVISION	BY

HANGAR FIRE ALARM PLAN

RELEASE FOR BID

AIRPORT TERMINAL AND HANGAR DEVELOPMENT

PREPARED FOR

DEFUNIAK SPRINGS MUNICIPAL AIRPORT

DESIGNED BY:	FB
DRAWN BY:	FB
CHECKED BY:	KB
APPROVED BY:	RC
PROJECT NO:	2019.028.01
DATE:	November 1, 2021

SHEET NUMBER

FA-103

THIS DOCUMENT CONTAINS PRIVILEGED AND PROPRIETARY INFORMATION, ALL OF WHICH IS EXPRESSLY PROVIDED BY AVCON, INC., FOR USE BY THE INTENDED RECIPIENT, AND FOR A SPECIFIC PURPOSE. WITHOUT THE EXPRESS WRITTEN CONSENT OF AVCON, INC., ANY DISTRIBUTION, REPRODUCTION, OR OTHER USE OF THIS DOCUMENT, IN WHOLE OR IN PART, IS STRICTLY PROHIBITED.

FIRE ALARM BASIS OF DESIGN

IN ACCORDANCE WITH FLORIDA ARTICLE 61G15-33.006 DESIGN OF ALARM SYSTEMS, WE PROVIDE THE FOLLOWING DESIGN CRITERIA BASED ON PARAGRAPH 2 ITEMS (A THROUGH R).

A. THE FIRE ALARM INSTALLATION SHALL BE PERFORMED BY A FACTORY AUTHORIZED REPRESENTATIVE, THE CONTRACTOR SHALL TEST AND CERTIFY SYSTEM PRIOR TO SUBSTANTIAL COMPLETION. ANY CHANGES SHALL BE INCORPORATED INTO THE SYSTEMS PROGRAMMING AND DOCUMENTATION.

B. SYSTEM RISER DIAGRAM:
THE SYSTEM RISER DIAGRAM IS SHOWN ON THIS DRAWING.

C. DEVICE TYPES AND LOCATIONS:
ALL DEVICES FOR THE FIRE ALARM SYSTEM SHALL BE U.L. LISTED. THE CONTRACTOR SHALL CONFIRM THE MOUNTING HEIGHTS OF ALL FIRE ALARM DEVICES PRIOR TO ROUGH-IN TO CONFIRM THAT THEY CAN BE MOUNTED AT THE ADA REQUIRED HEIGHT. REFERENCE SPECIFICATION 16720 FOR ADDITIONAL DEVICES REQUIREMENTS. NOTIFY THE ENGINEER OF ANY CONFLICT.

D. TYPES OF CONDUCTORS AND INSTALLATION REQUIREMENTS INCLUDING RATING IDENTIFICATION AND LISTING REQUIREMENTS:
CONDUCTORS SHALL BE U.L. LISTED FOR FIRE-PROTECTIVE SIGNALING APPLICATION (MIN. #16 THHN CU). ALL FIRE ALARM WIRING SHALL BE INSTALLED IN A CONDUIT OR AN APPROVED RACEWAY SYSTEM.

E. NOTIFICATION REQUIREMENTS:
BOTH VISUAL AND AUDIBLE APPLIANCES SHALL BE INSTALLED TO MEET THE REQUIREMENTS OF NFPA 72. DEVICES SHALL BE LOCATED IN THE OCCUPIED FINISHED AREAS OF THE BUILDING (CORE AREA). AUDIBLE DEVICES SHALL BE INSTALLED IN THE UNFINISHED FUTURE TENANT AREAS FOR AUDIBLE NOTIFICATION. STROBES CANDELA RATING SHALL MEET CURRENT NFPA 72 REQUIREMENTS. HORNS SHALL PROVIDE A MINIMUM db LEVEL OF 15db ABOVE THE AVERAGE AMBIENT SOUND LEVEL FOR BUSINESS OCCUPANCIES OF 55db.

F. BACKUP POWER REQUIREMENTS:
THE NORMAL POWER SHALL BE FROM A DEDICATED 120V, 20A CIRCUIT BREAKER IN ACCORDANCE WITH NEC AND NFPA 72. THE SECONDARY SUPPLY SHALL BE BY BATTERIES AUTOMATICALLY WITHIN 30 SECONDS OF THE PRIMARY SUPPLY FAILURE. PROVIDE SECONDARY POWER FOR A MINIMUM OF 24 HOURS UNDER MAXIMUM LOAD AND BE CAPABLE OF OPERATING ALL ALARM NOTIFICATION APPLIANCES USED FOR EVACUATION FOR AN ADDITIONAL 5 MINUTES. THE SECONDARY POWER SUPPLY (BATTERIES) FOR THE COMMUNICATIONS SERVICE SHALL BE CAPABLE OF OPERATING THE SYSTEM UNDER MAXIMUM NORMAL LOAD FOR 24 HOURS AND THEN SHALL BE CAPABLE OF OPERATING THE SYSTEM DURING A FIRE OR OTHER EMERGENCY CONDITION FOR A PERIOD OF 2 HOURS. REFERENCE SPECIFICATION 28 31 00 FOR ADDITIONAL REQUIREMENTS.

G. PROVIDE CONDUIT AND NECESSARY WIRING FROM EACH FIRE ALARM SHUT DOWN RELAY TO THE EQUIPMENT IT CONTROLS. COORDINATE TERMINATION OF SHUT DOWN WIRING WITH HVAC CONTROLS CONTRACTOR.

H. ALL CONDUIT SHALL BE FURNISHED WITH NYLON PULL STRING.

I. ALL DEVICES WITH STROBES SHALL BE SYNCHRONIZED.

J. ALL AIR HANDLERS (AHU'S) SHALL SHUT DOWN UPON ACTIVATION OF THE FIRE ALARM SYSTEM. FIRE ALARM SYSTEM SHALL BE ZONE BY DEVICE, FLOOR, AND AREA REFERENCE NFPA 72, A10.16.6 FOR AREA DETERMINATION. COORDINATE AHU SHUTDOWN DEVICE (INCLUDING DUCT MOUNTED SMOKE DETECTORS AND REMOTE TEST DEVICES) QUANTITIES AND LOCATIONS WITH MECHANICAL CONTRACTOR. ALL LOCATIONS SHALL COMPLY WITH NFPA. ALL AHU SHUTDOWN DEVICES MUST BE LOCATED WITHIN THREE FEET OF THE AHU CONTROLLER.

K. PROVIDE SURGE SUPPRESSION DEVICES ON EACH CABLE LEAVING AND ENTERING A BUILDING. SEPARATED BUILDINGS ARE DESIGNATED BY DISTINCT BUILDING NUMBERS, EVEN THOUGH A COMMON ROOF MAY JOIN THEM.

L. DEVICES SHALL BE LOCATED PER NFPA 72.

M. FIRE ALARM PANEL BATTERY SHALL PROVIDE 24 HOURS OF OPERATION.

N. INSTALL HEAT DETECTORS AS SHOWN, IN STORAGE ROOMS (REGARDLESS OF SIZE), IN MECHANICAL ROOMS, IN JANITORIAL ROOMS, AND IN ALL NORMALLY UNOCCUPIED SPACES, UNLESS THE FACILITY IS FULLY PROTECTED BY A FIRE SPRINKLER SYSTEM.

O. VERIFY QUANTITY TYPE, AND ARRANGEMENT OF DEVICES REQUIRED ON PLAN DRAWINGS, THIS DRAWING FOR SCHEMATIC PURPOSES ONLY.

P. COORDINATE FIRE SPRINKLER DEVICE QUANTITIES AND LOCATIONS WITH FIRE SPRINKLER CONTRACTOR.

Q. PROVIDE A ZONE MAP OF THE FIRE ALARM SYSTEM MOUNTED NEAR THE FIRE ALARM CONTROL PANEL AND REMOTE ANNUNCIATOR PANEL.

R. FIRE ALARM CONTRACTOR SHALL PROVIDE SIGNED AND SEALED FLOOR PLANS INDICATING ALL FIRE ALARM DEVICES AND BATTERY CALCULATIONS.

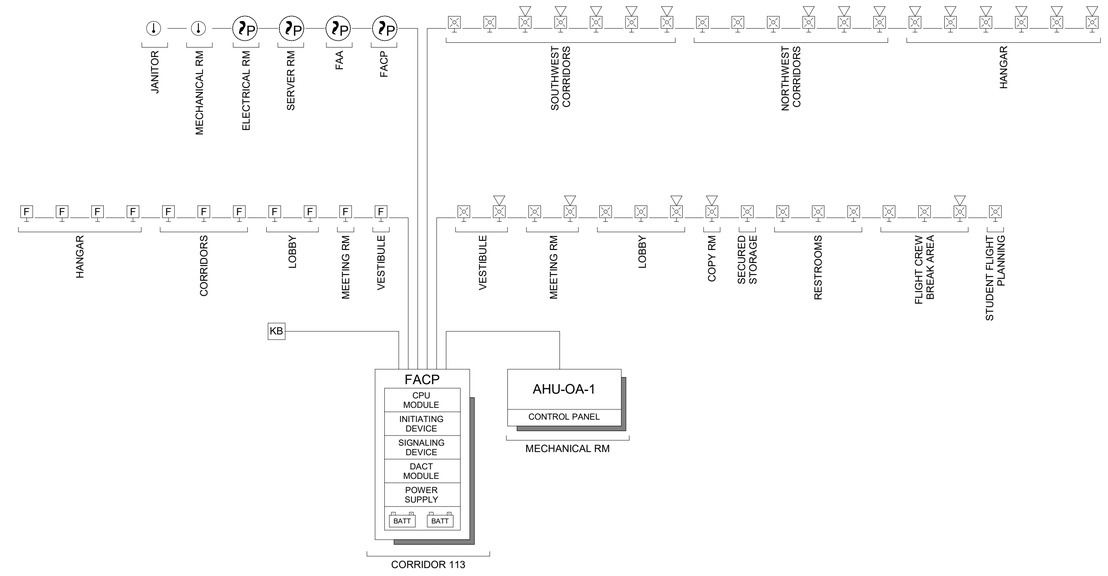

FOR PERMIT & BIDDING ONLY

AVCON

TRANSFORMING TODAY'S IDEAS INTO TOMORROW'S REALITY

THIS DOCUMENT CONTAINS PRIVILEGED AND PROPRIETARY INFORMATION, ALL OF WHICH IS EXPRESSLY PROVIDED BY AVCON, INC., FOR USE BY THE INTENDED RECIPIENT, AND FOR A SPECIFIC PURPOSE. WITHOUT THE EXPRESS WRITTEN CONSENT OF AVCON, INC. ANY DISTRIBUTION, REPRODUCTION, OR OTHER USE OF THIS DOCUMENT, IN WHOLE OR IN PART, IS STRICTLY PROHIBITED.

RICHARD CREAVALLE, P.E.
FL LICENSE NO.:59885
FBPR CERTIFICATE OF AUTHORIZATION NO. 5057

NO.	DATE	REVISION	BY

FIRE ALARM RISER DIAGRAM

RELEASE FOR BID

AIRPORT TERMINAL AND HANGAR DEVELOPMENT

PREPARED FOR

DEFUNIAK SPRINGS MUNICIPAL AIRPORT

DESIGNED BY:	FB
DRAWN BY:	FB
CHECKED BY:	KB
APPROVED BY:	RC
PROJECT NO:	2019.028.01
DATE:	November 1, 2021

SHEET NUMBER

FA-401

LIGHTNING PROTECTION SYMBOL LEGEND

⊙ P	AIR TERMINAL "P" INDICATES PARAPET MOUNTED AIR TERMINAL "HARGER CAT.# 1216X16" - SOLID ALUMINUM POINT WITH BLUNT TIP. SEE AIR TERMINAL DETAILS ON SHEET LP-501.
●	TEE SPLICE HARGER CAT. # 1207
○	DOWN CONDUCTOR CONCEALED HARGER CAT.# A28 - 24 STRAND S OF 14 GA ALUMINUM LIGHTING PROTECTION CONDUCTOR.
⏚	GROUND ROD HARGER CAT.# 5810 - 5/8" x10'-0" COPPER CLAD STEEL GROUND ROD. 25 OHMS IMPEDANCE MAXIMUM. SEE DETAIL 11 ON SHEET LP-501.
- - - - - - - -	LIGHTNING CONDUCTOR (ABOVE GROUND) HARGER CAT.# A28 - 24 STRAND S OF 14 GA ALUMINUM LIGHTING PROTECTION CONDUCTOR.
— — — — — —	GROUND RING (UNDERGROUND) HARGER CAT.# 29 - 29 STRAND S OF 16 GA COPPER LIGHTING PROTECTION CONDUCTOR.
LIGHTING PROTECTION SYSTEM SHALL BE UL OR LPI INSTECTED.	

LIGHTNING PROTECTION KEY NOTES ⟨X⟩

1	LIGHTNING AIR TERMINAL - ALUMINUM, SHALL BE 18" LENGTH, 1/2" DIA. SEE SHEET LP-501 FOR DETAILS.
2	5/8" x 30'-0" COPPER CLADDED GROUNDING ROD AND INSPECTION WELL. GROUND RODS AND COUNTERPOISE SHALL BE LOCATED 24" FROM BUILDING FOUNDATION AND FOOTING. EARTH TO GROUND RESISTANCE OF 10 OHMS OR LESS. SEE SHEET LP-501 FOR DETAILS.
3	#2/0 BARE COPPER WIRE GROUND RING.
4	MECHANICAL SPLICE CONNECTION OR APPROVED EQUAL. SEE SHEET LP-501 FOR DETAILS.
5	CLASS 1, 28 STRAND ALUMINUM LIGHTNING PROTECTION BONDING CONDUCTOR.
6	THRU ROOF DOWN CONDUCTOR, #4/0 BARE COPPER DOWN CONDUCTOR BONDED TOP AND BOTTOM TO BUILDING STEEL. SEE SHEET LP-501 FOR DETAILS.

LIGHTNING PROTECTION NOTES

1. THE COMPLETED INSTALLATION SHALL MEET THE REQUIREMENTS OF THE UNDERWRITERS LABORATORIES INC. "INSTALLATION REQUIREMENTS FOR LIGHTNING PROTECTION SYSTEMS, UL 96A".
2. THE COMPLETED INSTALLATION SHALL BE CERTIFIED BY UNDERWRITERS LABORATORIES (UL) WITH A "MASTER LABEL CERTIFICATE" OR "LETTER OF FINDINGS" COMPLIANT WITH UL 96A (13TH EDITION).
3. ALL METALLIC PIPING (WATER, FIRE, SANITARY, STORM, ETC) AND CONDUCTIVE SERVICES (COAX, ANTENNA, ETC) WHICH ENTERS THE PROTECTED BUILDING SHALL BE BONDED TO THE LIGHTNING PROTECTION SYSTEM WITHIN 12 FT (3.6M) OF GRADE.
4. THE LIGHTNING PROTECTION SYSTEM REQUIRES A SURGE PROTECTION DEVICE TO BE INSTALLED ON EACH ELECTRIC SERVICE ENTRACE. THESE SURGE PROTECTION DEVICES MUST BE A TYPE 1 OR TYPE 2 SURGE PROTECTION DEVICE THAT IS LISTED TO COMPLY WITH UL 1449, 4TH EDITION AND HAVE A NOMINAL DISCHARGE CURRENT (I/N) OF 20kA PER PHASE.
5. THE LIGHTNING PROTECTION SYSTEM REQUIRES A SURGE PROTECTION DEVICE TO BE INSTALLED ON EACH CONDUCTIVE SIGNAL, DATA AND COMMUNICATION LINE. THESE SURGE PROTECTION DEVICES SHALL BE LISTED TO COMPLY WITH UL-452 "THE STANDARD FOR ANTENNA-DISCHARGE UNITS", UL-497 "THE STANDARD FOR PROTECTORS FOR PAIRED-CONDUCTOR COMMUNICATIONS CIRCUITS" OR UL-497C "THE STANDARD FOR PROTECTORS FOR COAXIAL COMMUNICATIONS CIRCUITS" AND HAVE A 10 kA MAXIMUM DISCHARGE CURRENT (I/MAX) WHEN INSTALLED AT THE ENTRANCE.
6. FASTENING METHOD OF THE AIR TERMINAL BASES AND CONDUCTOR SHALL BE COMPATIBLE WITH THE ROOFING MATERIALS. ROOFING CONTRACTOR SHALL PROVIDE WRITTEN APPROVAL INDICATING ACCEPTANCE OF PROPOSED METHOD OR WRITTEN REQUIREMENTS FOR A FASTENING METHOD WHICH WILL NOT VOID THE ROOFING WARRANTY.
7. ROOF PADS, PAVERS, FLASHING OR ANY OTHER SPECIAL ROOFING MATERIALS REQUIRED FOR THE INSTALLATION OF THE LIGHTNING PROTECTION SYSTEM SHALL BE FURNISHED AND INSTALLED BY THE ROOFING CONTRACTOR.
8. INDICATED BUILDING HEIGHTS ARE BASED ON GARAGE LEVEL 1 AND MAY NOT REPRESENT ACTUAL HEIGHT ABOVE GRADE AT INDICATED POINT.
9. STRIKE TERMINATION DEVICES SHALL BE PLACED ON RIDGES OF PITCHED ROOFS AND AROUND THE PERIMETER OF FLAT OR GENTLY SLOPING ROOFS AT INTERVALS NOT EXCEEDING 20 FT (6 M). STRIKE TERMINATION DEVICES 2 FT (0.6 M) OR MORE ABOVE THE OBJECT OR AREA TO BE PROTECTED SHALL BE PERMITTED TO BE PLACED AT INTERVALS NOT EXCEEDING 25 FT (7.6M).
10. FLAT OR GENTLY SLOPING ROOFS THAT EXCEED 50 FT (15 M) IN WIDTH OR LENGTH SHALL HAVE ADDITIONAL STRIKE TERMINATION DEVICES LOCATED AT INTERVALS NOT TO EXCEED 50 FT (15M) ON THE FLAT OR GENTLY SLOPING AREAS.
11. MAIN CONDUCTORS SHALL INTERCONNECT ALL STRIKE TERMINATION DEVICES AND SHALL HAVE A DOWNWARD OR HORIZONTAL PATH TO GROUND. CONDUCTORS ARE ALLOWED TO RISE, PROVIDED A 3:12 (1/4) SLOPE IS MAINTAINED. ALL BENDS IN THE CONDUCTOR SHALL HAVE A MINIMUM RADIUS OF 8" NOR SHALL THE BEND HAVE AN INCLUDED ANGLE OF LESS THAN 90 DEGREES.
12. THE TIP OF A STRIKE TERMINATION DEVICE SHALL NOT BE LESS THAN 10 IN. (254 MM) ABOVE THE OBJECT OR AREA IT IS TO PROTECT.
13. CONCEAL CONDUCTORS AS MUCH AS POSSIBLE. COORDINATE WITH ARCHITECTURAL AND STRUCTURAL DRAWINGS. AIR TERMINALS MUST EXTEND AT LEAST 12" ABOVE ROOF SURFACE.

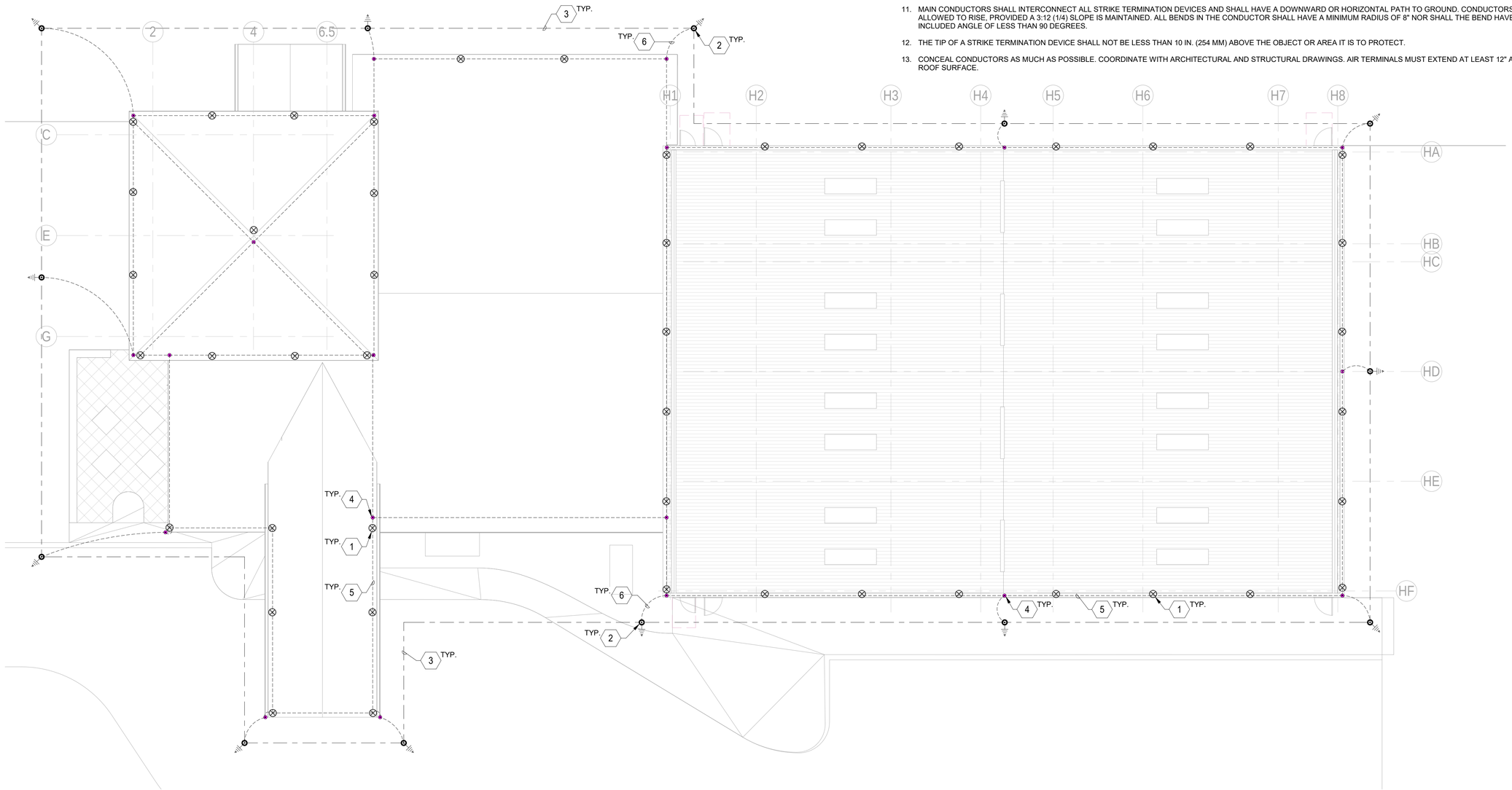

1 LIGHTNING PROTECTION PLAN
3/32" = 1'-0"

FOR PERMIT & BIDDING ONLY

AVCON
TRANSFORMING TODAY'S IDEAS INTO TOMORROW'S REALITY

NORTH

RICHARD CREAVALLE, P.E.
FL LICENSE NO.:59885
FBPR CERTIFICATE OF AUTHORIZATION NO. 5057

NO.	DATE	REVISION	BY

LIGHTNING PROTECTION PLAN

RELEASE FOR BID

AIRPORT TERMINAL AND HANGAR DEVELOPMENT

PREPARED FOR

DEFUNIAK SPRINGS MUNICIPAL AIRPORT

DESIGNED BY:	FB
DRAWN BY:	FB
CHECKED BY:	KB
APPROVED BY:	RC
PROJECT NO:	2019.028.01
DATE:	November 1, 2021

SHEET NUMBER

LP-101

THIS DOCUMENT CONTAINS PRIVILEGED AND PROPRIETARY INFORMATION, ALL OF WHICH IS EXPRESSLY PROVIDED BY AVCON, INC., FOR USE BY THE INTENDED RECIPIENT, AND FOR A SPECIFIC PURPOSE, WITHOUT THE EXPRESS WRITTEN CONSENT OF AVCON, INC. ANY DISTRIBUTION, REPRODUCTION, OR OTHER USE OF THIS DOCUMENT, IN WHOLE OR IN PART, IS STRICTLY PROHIBITED.

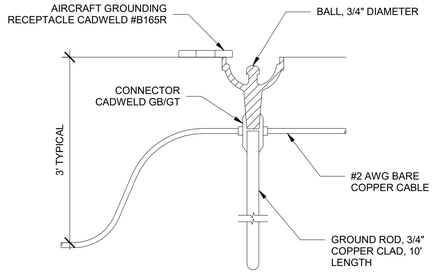

1 AIRCRAFT GROUND LUG DETAIL

NTS

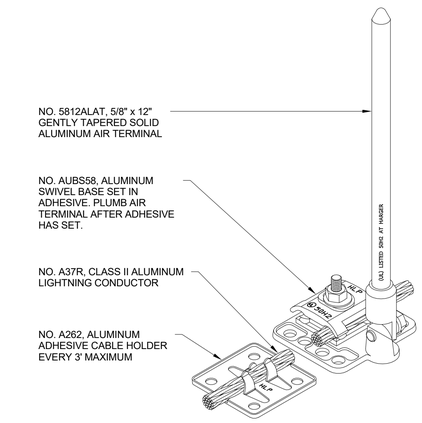

2 AIR TERMINAL DETAIL "B"

NTS

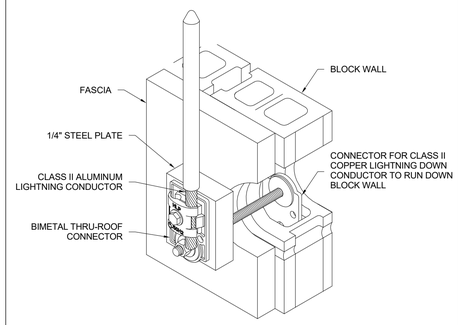

3 THRU-FASCIA DETAIL

NTS

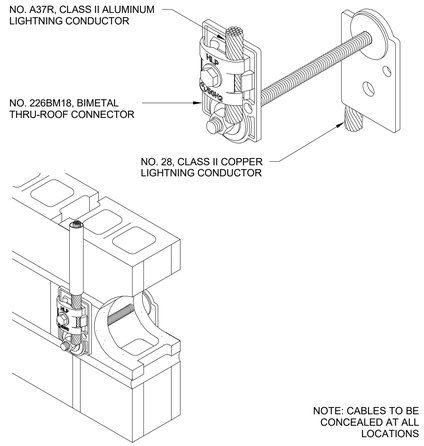

4 THRU-WALL DETAIL "TW"

NTS

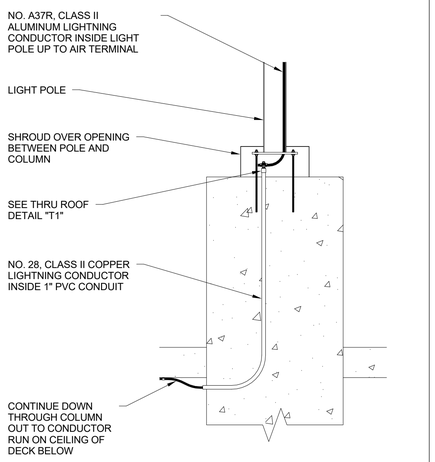

5 DOWN CONDUCTOR DETAIL "DC2"

NTS

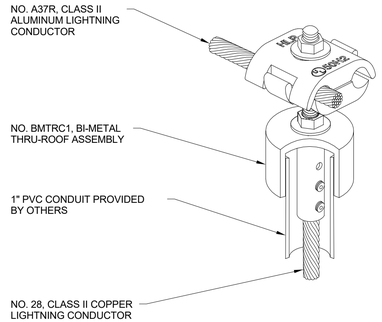

6 THRU-ROOF DETAIL "T1"

NTS

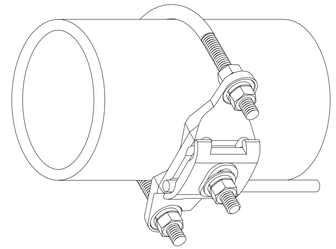

7 U-BOLT PIPE CLAMP

NTS

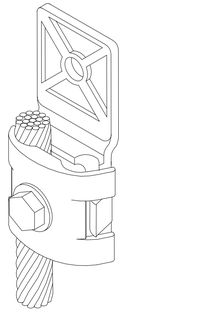

8 HEAVY DUTY BONDING LUG

NTS

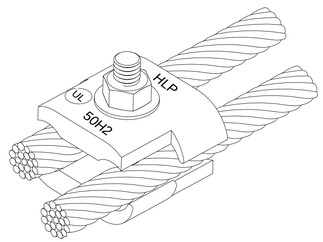

9 1 BOLT PARALLEL CLAMP

NTS

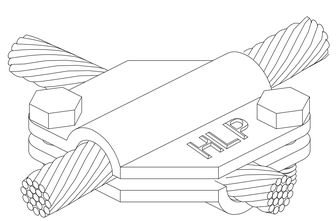

10 CROSS RUN CONNECTOR

NTS

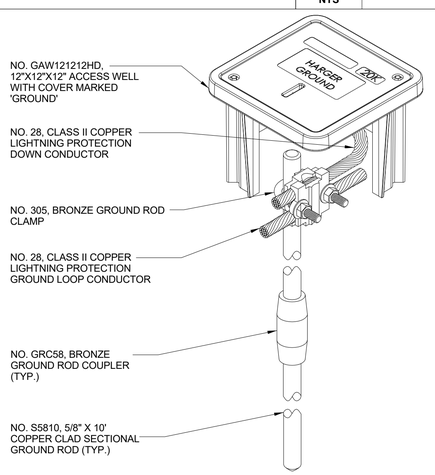

11 GROUND ROD DETAIL "G"

NTS

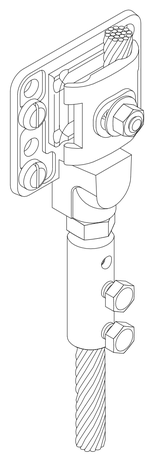

12 BONDING PLATE

NTS

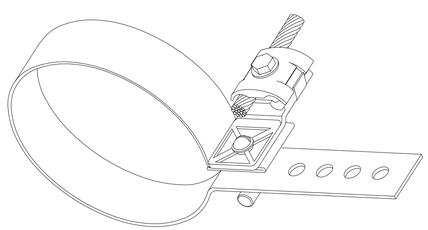

13 STRAP TYPE PIPE CLAMP

NTS

FOR PERMIT & BIDDING ONLY

AVCON

TRANSFORMING TODAY'S IDEAS INTO TOMORROW'S REALITY

RICHARD CREAVALLE, P.E.
FL LICENSE NO.:59885
FBPR CERTIFICATE OF AUTHORIZATION NO. 5057

NO.	DATE	REVISION	BY

LIGHTNING PROTECTION & GROUNDING DETAILS

RELEASE FOR BID

AIRPORT TERMINAL AND HANGAR DEVELOPMENT

PREPARED FOR

DEFUNIAK SPRINGS MUNICIPAL AIRPORT

DESIGNED BY:	FB
DRAWN BY:	FB
CHECKED BY:	KB
APPROVED BY:	RC
PROJECT NO:	2019.028.01
DATE:	November 1, 2021

SHEET NUMBER

LP-501

THIS DOCUMENT CONTAINS PRIVILEGED AND PROPRIETARY INFORMATION, ALL OF WHICH IS EXPRESSLY PROVIDED BY AVCON, INC., FOR USE BY THE INTENDED RECIPIENT, AND FOR A SPECIFIC PURPOSE. WITHOUT THE EXPRESS WRITTEN CONSENT OF AVCON, INC., ANY DISTRIBUTION, REPRODUCTION, OR OTHER USE OF THIS DOCUMENT, IN WHOLE OR IN PART, IS STRICTLY PROHIBITED.

GENERAL NOTES

1. MOUNTING HEIGHTS FOR DATA OUTLETS OTHER THAN 18" NOTED IN EACH CASE

TECHNOLOGICAL KEY NOTES (X)

1	PROVIDE ROUGH IN AT 10' AFG FOR FUTURE CAMERAS. REFER TO INSTALATION DETAILS.
2	PROVIDE ROUGH IN FOR FUTURE CAMERA AT CLERESTORY LEVEL. REFER TO INSTALLATION DETAILS.
3	PROVIDE CAMERA ROUGH IN AT SOFFIT ELEVATION. REFER TO INSTALLATION DETAILS.
4	PROVIDE JUNCTION BOX AND POKE THROUGH LOCATION FOR ROUTING FOR FUTURE ANTENNA CABLING. ROUTE 1" CONDUIT BACK TO SERVER ROOM. COORDINATE EXACT LOCATION WITH -OWNER AND ENGINEER BEFORE INSTALLATION.
5	COMBO POWER/DATA FLOOR BOX. REFER TO T-501 FOR DETAILS.
6	TV POWER/DATA OUTLET. TYPICAL FOR EACH. REFER TO T-501 FOR DETAILS. CONTRACTOR FURNISH AND INSTALL (1) HDMI (1) CAT6 AND (1) COAXIAL CABLE TO EACH TV OUTLET

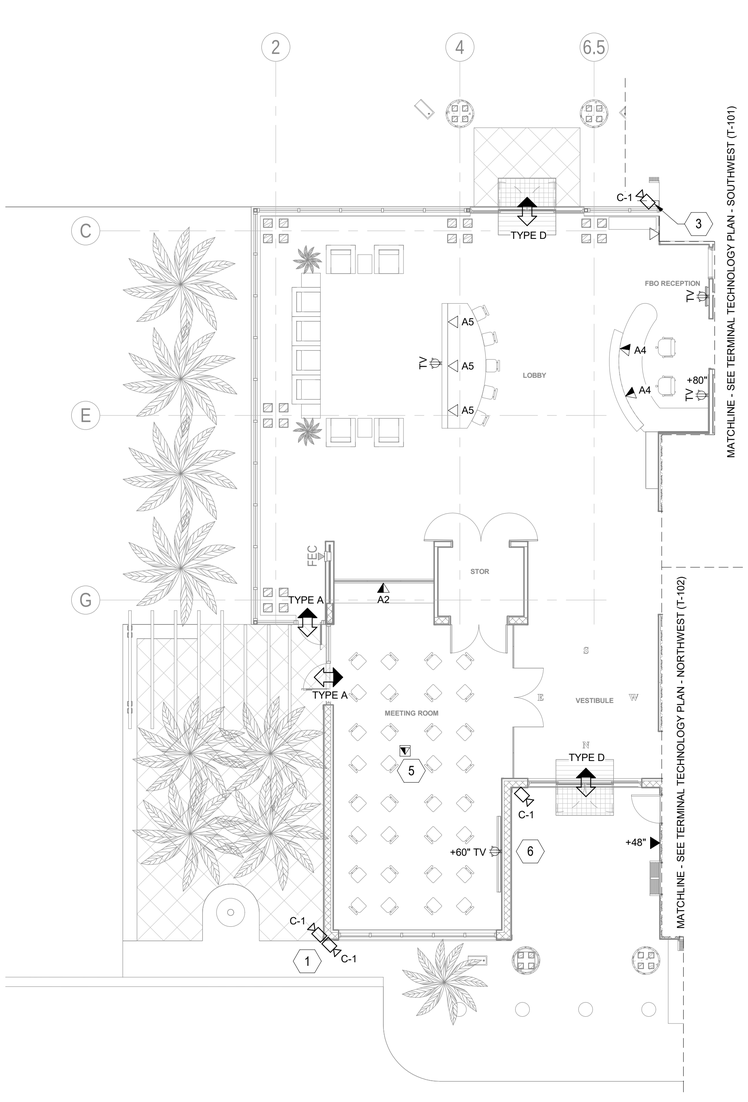

1 TERMINAL TECHNOLOGY PLAN - EAST
1/8" = 1'-0"

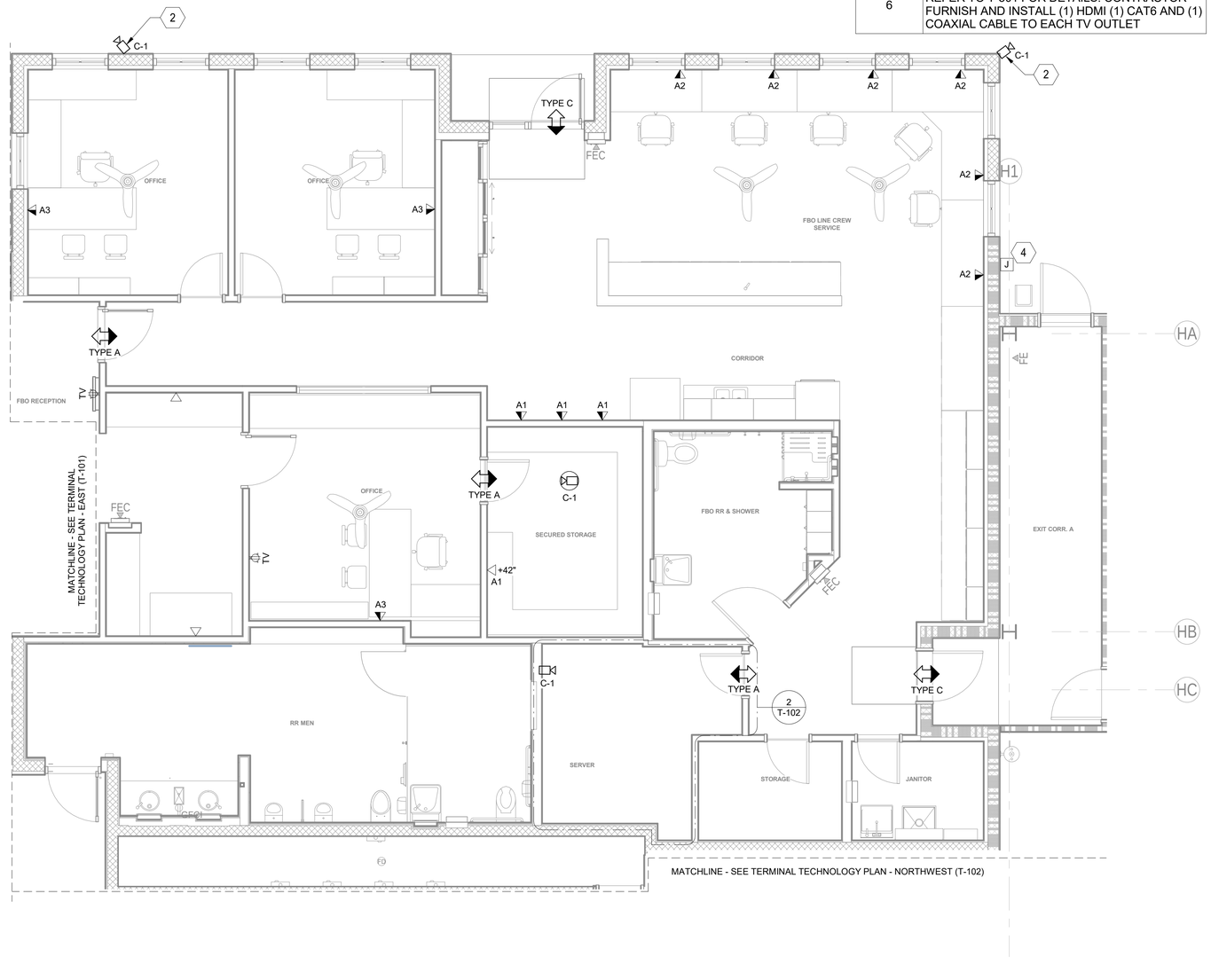

2 TERMINAL TECHNOLOGY PLAN - SOUTHWEST
1/4" = 1'-0"

FOR PERMIT & BIDDING ONLY

AVCON
TRANSFORMING TODAY'S IDEAS INTO TOMORROW'S REALITY

NORTH

RICHARD CREAVALLE, P.E.
FL LICENSE NO.:59885
FBPR CERTIFICATE OF AUTHORIZATION NO. 5057

NO	DATE	REVISION	BY

TERMINAL TECHNOLOGY PLAN

RELEASE FOR BID

AIRPORT TERMINAL AND HANGAR DEVELOPMENT

PREPARED FOR
DEFUNIAK SPRINGS MUNICIPAL AIRPORT

DESIGNED BY:	FB
DRAWN BY:	FB
CHECKED BY:	KB
APPROVED BY:	RC
PROJECT NO:	2019.028.01
DATE:	November 1, 2021

SHEET NUMBER
T-101

THIS DOCUMENT CONTAINS PRIVILEGED AND PROPRIETARY INFORMATION, ALL OF WHICH IS EXPRESSLY PROVIDED BY AVCON, INC., FOR USE BY THE INTENDED RECIPIENT, AND FOR A SPECIFIC PURPOSE, WITHOUT THE EXPRESS WRITTEN CONSENT OF AVCON, INC. ANY DISTRIBUTION, REPRODUCTION, OR OTHER USE OF THIS DOCUMENT, IN WHOLE OR IN PART, IS STRICTLY PROHIBITED.

TECHNOLOGICAL KEY NOTES (X)

1	PROVIDE ROUGH IN AT 10' AFG FOR FUTURE CAMERAS. REFER TO INSTALATION DETAILS.
2	8'LX4'H CLASS A FLAME RATED PLYWOOD.
3	2 POST DATA RACK. REFER TO INSTALLATION DETAILS FOR EQUIPMENT ELEVATIONS AND DIV 27 FOR PRODUCT REQUIREMENTS.
4	4 POST LOCKABLE SERVER CABINET. REFER TO INSTALLATION DETAIL FOR EQUIPMENT ELEVATIONS AND DIV 27 FOR PRODUCT REQUIREMENTS.
5	TELECOMMUNCATION GROUND BUS BAR. REFER TO INSTALLATION DETAILS FOR REQUIREMENTS OF BUS BAR AND INTERSYSTEM BONDING RISER.

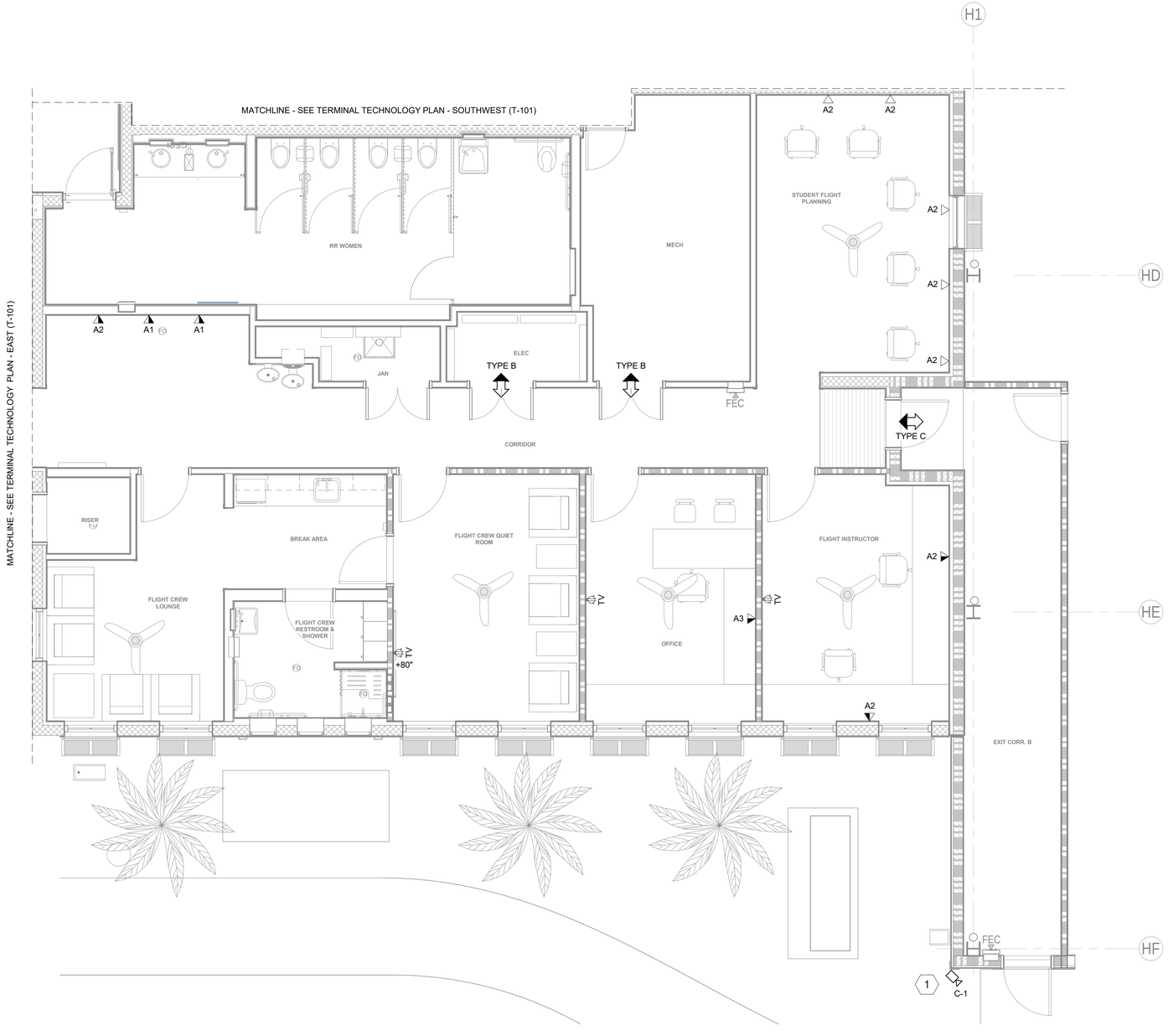

1 TERMINAL TECHNOLOGY PLAN - NORTHWEST
1/4" = 1'-0"

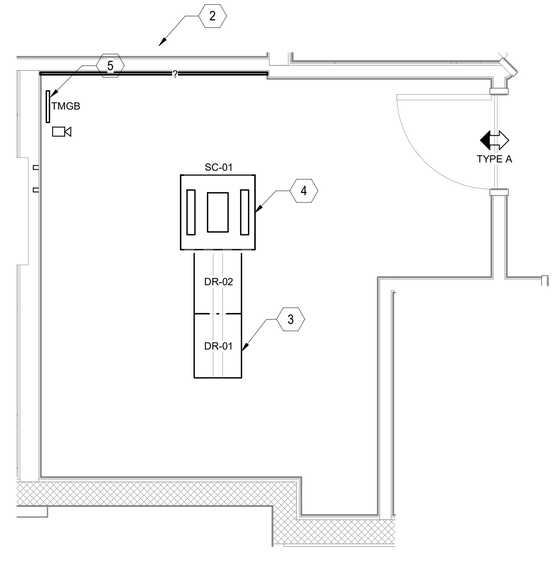

2 ENLARGED SERVER ROOM TECHNOLOGY PLAN
1/2" = 1'-0"

FOR PERMIT & BIDDING ONLY

AVCON
TRANSFORMING TODAY'S IDEAS INTO TOMORROW'S REALITY

NORTH

RICHARD CREAVALLE, P.E.
FL LICENSE NO.:59885
FBPR CERTIFICATE OF AUTHORIZATION NO. 5057

NO.	DATE	REVISION	BY

TERMINAL TECHNOLOGY PLAN

RELEASE FOR BID

AIRPORT TERMINAL AND HANGAR DEVELOPMENT

PREPARED FOR

DEFUNIAK SPRINGS MUNICIPAL AIRPORT

DESIGNED BY:	FB
DRAWN BY:	FB
CHECKED BY:	KB
APPROVED BY:	RC
PROJECT NO:	2019.028.01
DATE:	November 1, 2021

SHEET NUMBER

T-102

THIS DOCUMENT CONTAINS PRIVILEGED AND PROPRIETARY INFORMATION, ALL OF WHICH IS EXPRESSLY PROVIDED BY AVCON, INC., FOR USE BY THE INTENDED RECIPIENT, AND FOR A SPECIFIC PURPOSE. WITHOUT THE EXPRESS WRITTEN CONSENT OF AVCON, INC., ANY DISTRIBUTION, REPRODUCTION, OR OTHER USE OF THIS DOCUMENT, IN WHOLE OR IN PART, IS STRICTLY PROHIBITED.

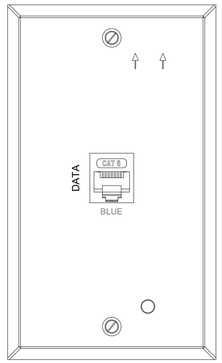

1	DATA OUTLET (A1)
NTS	

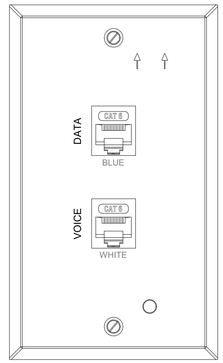

2	DATA OUTLET (A2)
NTS	

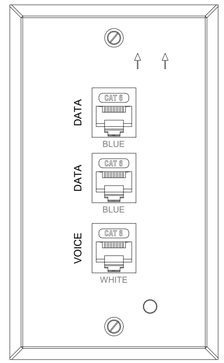

3	DATA OUTLET (A3)
NTS	

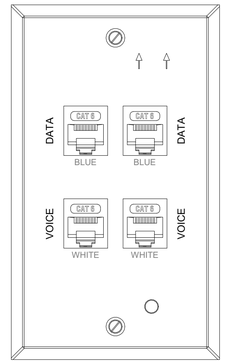

4	DATA OUTLET (A4)
NTS	

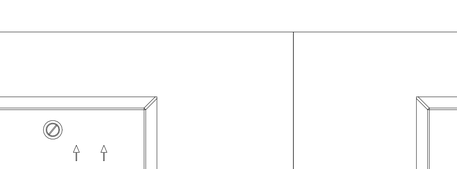



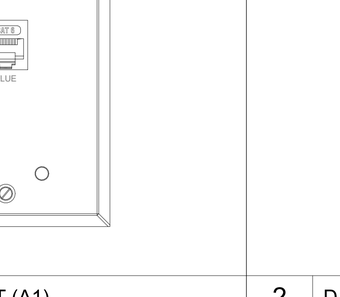

1. 3 GANG RECESSED TV BOX WITH LOW VOLTAGE PULL-THROUGH BRUSHES. LEGRAND TV3LVKITWCC2 OR APPROVED EQUAL. PROVIDE DUPLEX POWER RECEPTACLE, FACEPLATE WITH F-CONNECTOR AND CAT6 CONNECTION, AND BRUSHES FOR ROUTING CABLE.

5	WALL MOUNTED TV OUTLET
NTS	

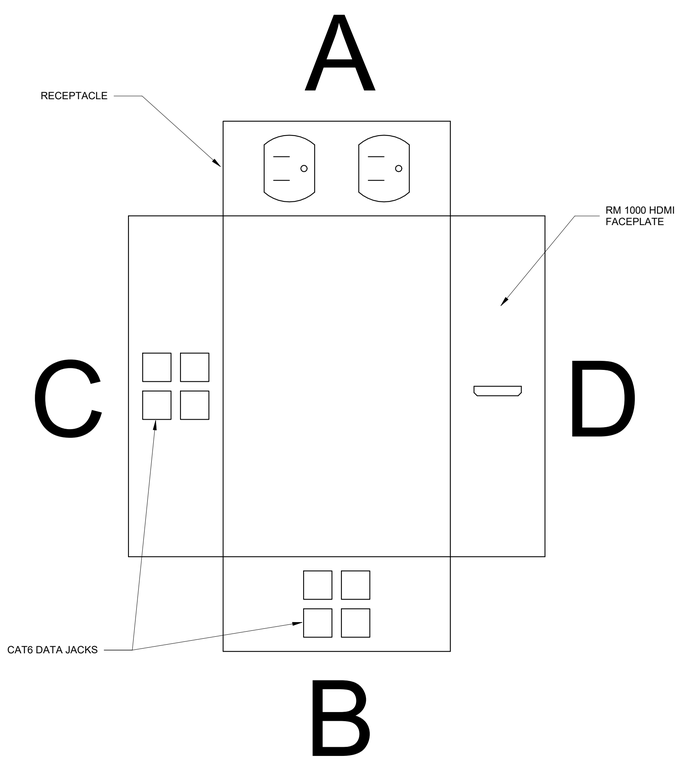

1. PROVIDE LEGRAND RFB4 FOUR COMPARTMENT RECESSED FLOOR BOX OR APPROVED EQUAL.
2. COORDINATE WITH ELECTRICAL CONTRACTOR FOR FLOOR INSTALLATION AND CONDUIT RUNS.
3. ROUTE CAT6 DATA BACK TO IDF ROOM.
4. ROUTE HDMI CABLE TO WALL MOUNTED TV AS SHOWN ON PLANS.

6	DATA/VOICE OUTLET FLOOR BOX (F3)
NTS	

FOR PERMIT & BIDDING ONLY

AVCON

TRANSFORMING TODAY'S IDEAS INTO TOMORROW'S REALITY

RICHARD CREAVALLE, P.E.
FL LICENSE NO.:59885
FBPR CERTIFICATE OF AUTHORIZATION NO. 5057

NO.	DATE	REVISION	BY

DATA/VOICE DETAILS

RELEASE FOR BID

AIRPORT TERMINAL AND HANGAR DEVELOPMENT

PREPARED FOR

DEFUNIAK SPRINGS MUNICIPAL AIRPORT

DESIGNED BY:	FB
DRAWN BY:	FB
CHECKED BY:	KB
APPROVED BY:	RC
PROJECT NO:	2019.028.01
DATE:	November 1, 2021

SHEET NUMBER

T-501

THIS DOCUMENT CONTAINS PRIVILEGED AND PROPRIETARY INFORMATION, ALL OF WHICH IS EXPRESSLY PROVIDED BY AVCON, INC., FOR USE BY THE INTENDED RECIPIENT, AND FOR A SPECIFIC PURPOSE, WITHOUT THE EXPRESS WRITTEN CONSENT OF AVCON, INC. ANY DISTRIBUTION, REPRODUCTION, OR OTHER USE OF THIS DOCUMENT, IN WHOLE OR IN PART, IS STRICTLY PROHIBITED.

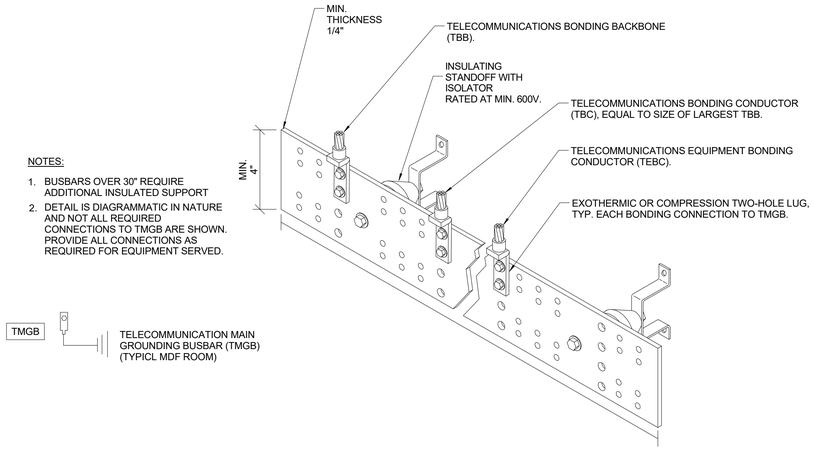

1 TELECOMMUNICATIONS MAIN GROUNDING BUSBAR (TMGB) DETAIL

NTS

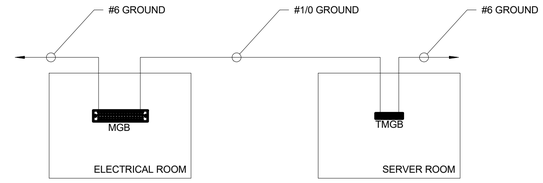

1. BOND LADDER RACK, DATA RACKS TO TMGB WITH #6G.
2. BOND TMGB TO BUILDING MAIN GROUNDING SYSTEM ELECTRICAL ROOM WITH #6G.
3. ALL GROUND CONNECTION TO BE IN ACCORDANCE WITH TIA-607-C

2 INTERSYSTEM BONDING

NTS

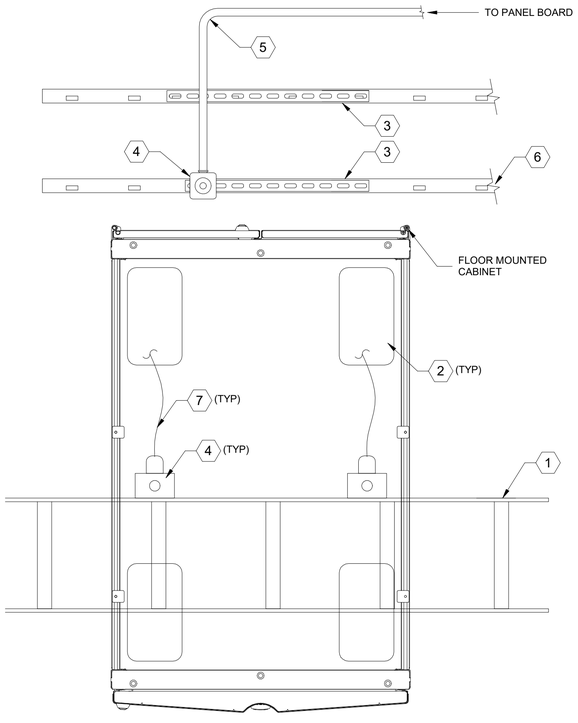

HEX NOTES

1. OVERHEAD LADDER TRAY FOR ALL HORIZONTAL AND BACKBONE CABLING.
2. PROVIDE/INSTALL BUSHED CABLE ENTRANCE ON TOP OF CABINET. QUANTITY AS REQUIRED TO FACILITATE ALL CABLING. (4) MINIMUM.
3. PROVIDE 5/8" D STRUT FASTENED HORIZONTALLY TO CABLE TRAY WITH 3/8" HARDWARE LENGTH AS REQUIRE FOR ALL RECEPTACLES (1 CABINET WIDTH MIN). HEAD OF BOLT SHALL BE LOCATED ON INSIDE OF CABLE TRAY. MOUNT ON SIDE OF CABLE TRAY FACING REAR OF CABINET. LOWER STRUT TO BE USE FOR MOUNTING OF RECEPTACLE AND BOX FOR CABINET. UPPER STRUT TO B USED FOR CONDUIT STRAP / SUPPORT.
4. RECEPTACLE AND BACK BOX FOR CABINET POWER CONNECTIONS. CORD AND PLUGS SHALL BE PROVIDED WITH STRAIN RELIEF GRIP AND INSTALLED TO PREVENT DOWNWARD STRAIN ON PLUGS.
5. POWER CONDUITS ROUTED OVERHEAD AGAINST DECK TO LOCAL PANELBOARD AS INDICATED ON FLOOR PLANS.
6. COMMUNICATIONS CABLE TRAY.
7. CORD AND PLUG FROM UPS / PDU CABINET.

3 SERVER CABINET - POWER CONNECTION DETAIL

NTS

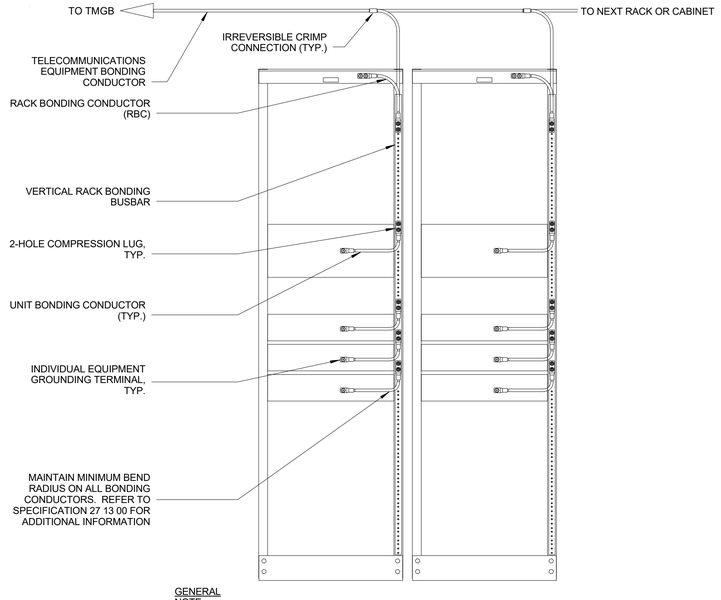

GENERAL NOTE
1. DETAIL IS DIAGRAMMATIC IN NATURE. ALL COMPONENTS AND EQUIPMENT THAT MAY BE INSTALLED IN AND AROUND RACKS AND CABINETS NOT NECESSARILY SHOWN FOR CLARITY.
2. GROUNDING AND BONDING FOR ALL TELECOMMUNICATION EQUIPMENT AND PATHWAYS SHALL BE FURNISHED AND INSTALLED IN ACCORDANCE WITH SPECIFICATION 27 13 00.

4 CABINET/RACK AND EQUIPMENT GROUNDING AND BONDING DETAIL

NTS

FOR PERMIT & BIDDING ONLY

AVCON
TRANSFORMING TODAY'S IDEAS INTO TOMORROW'S REALITY

RICHARD CREAVALLE, P.E.
FL LICENSE NO.:59885
FBPR CERTIFICATE OF AUTHORIZATION NO. 5057

NO	DATE	REVISION	BY

COMMUNICATIONS DETAILS

RELEASE FOR BID

AIRPORT TERMINAL AND HANGAR DEVELOPMENT

PREPARED FOR

DEFUNIAK SPRINGS MUNICIPAL AIRPORT

DESIGNED BY:	FB
DRAWN BY:	FB
CHECKED BY:	KB
APPROVED BY:	RC
PROJECT NO:	2019.028.01
DATE:	November 1, 2021

SHEET NUMBER

T-502

THIS DOCUMENT CONTAINS PRIVILEGED AND PROPRIETARY INFORMATION, ALL OF WHICH IS EXPRESSLY PROVIDED BY AVCON, INC., FOR USE BY THE INTENDED RECIPIENT, AND FOR A SPECIFIC PURPOSE, WITHOUT THE EXPRESS WRITTEN CONSENT OF AVCON, INC. ANY DISTRIBUTION, REPRODUCTION, OR OTHER USE OF THIS DOCUMENT, IN WHOLE OR IN PART, IS STRICTLY PROHIBITED.

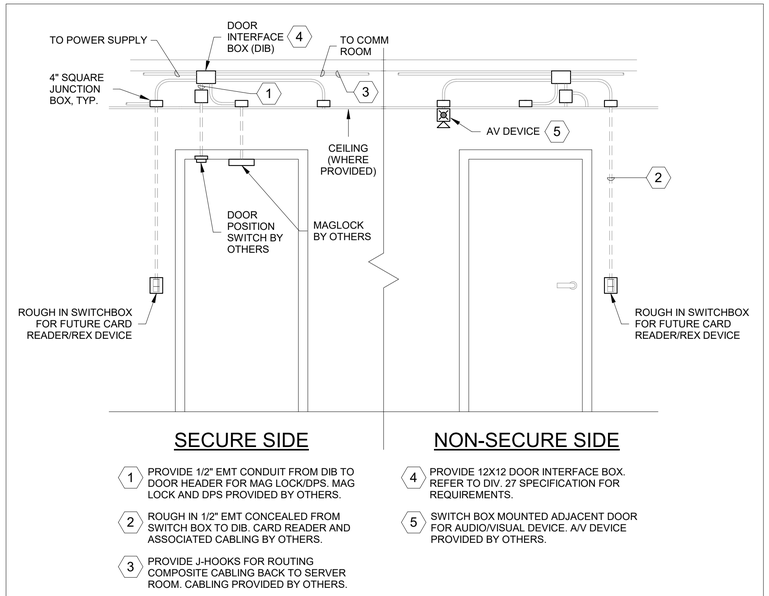

SECURE SIDE

1. PROVIDE 1/2" EMT CONDUIT FROM DIB TO DOOR HEADER FOR MAG LOCK/DPS. MAG LOCK AND DPS PROVIDED BY OTHERS.
2. ROUGH IN 1/2" EMT CONCEALED FROM SWITCH BOX TO DIB. CARD READER AND ASSOCIATED CABLING BY OTHERS.
3. PROVIDE J-HOOKS FOR ROUTING COMPOSITE CABLING BACK TO SERVER ROOM. CABLING PROVIDED BY OTHERS.

NON-SECURE SIDE

4. PROVIDE 12X12 DOOR INTERFACE BOX. REFER TO DIV. 27 SPECIFICATION FOR REQUIREMENTS.
5. SWITCH BOX MOUNTED ADJACENT DOOR FOR AUDIO/VISUAL DEVICE. A/V DEVICE PROVIDED BY OTHERS.

A	PACS SECURITY DOOR (A)
NTS	

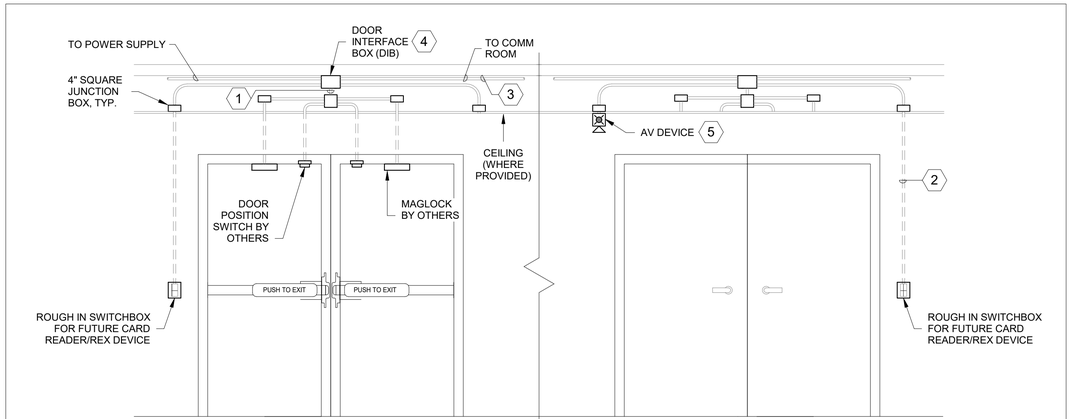

SECURE SIDE

1. PROVIDE 1/2" EMT CONDUIT FROM DIB TO DOOR HEADER FOR MAG LOCK/DPS. MAG LOCK AND DPS PROVIDED BY OTHERS.
2. ROUGH IN 1/2" EMT CONCEALED FROM SWITCH BOX TO DIB. CARD READER AND ASSOCIATED CABLING BY OTHERS.
3. PROVIDE J-HOOKS FOR ROUTING COMPOSITE CABLING BACK TO SERVER ROOM. CABLING PROVIDED BY OTHERS.

NON-SECURE SIDE

4. PROVIDE 12X12 DOOR INTERFACE BOX. REFER TO DIV. 27 SPECIFICATION FOR REQUIREMENTS.
5. SWITCH BOX MOUNTED ADJACENT DOOR FOR AUDIO/VISUAL DEVICE. A/V DEVICE PROVIDED BY OTHERS.

B	PACS SECURITY DOOR (B)
NTS	

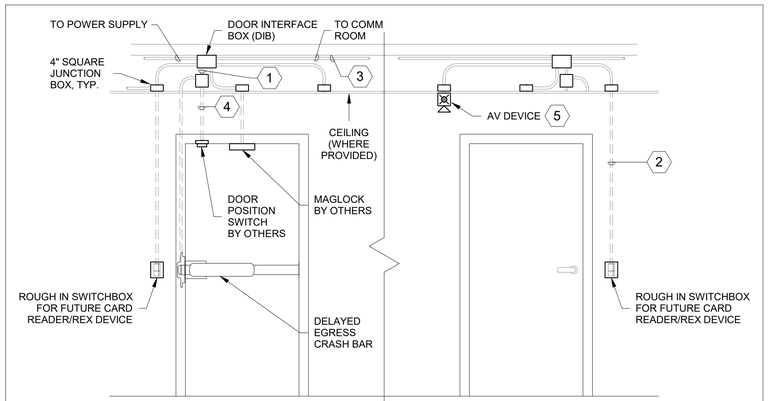

SECURE SIDE

1. PROVIDE 1/2" EMT CONDUIT FROM DIB TO DOOR HEADER FOR MAG LOCK/DPS. MAG LOCK AND DPS PROVIDED BY OTHERS.
2. ROUGH IN 1/2" EMT CONCEALED FROM SWITCH BOX TO DIB. CARD READER AND ASSOCIATED CABLING BY OTHERS.
3. PROVIDE J-HOOKS FOR ROUTING COMPOSITE CABLING BACK TO SERVER ROOM. CABLING PROVIDED BY OTHERS.

NON-SECURE SIDE

4. PROVIDE 12X12 DOOR INTERFACE BOX. REFER TO DIV. 27 SPECIFICATION FOR REQUIREMENTS.
5. SWITCH BOX MOUNTED ADJACENT DOOR FOR AUDIO/VISUAL DEVICE. A/V DEVICE PROVIDED BY OTHERS.

C	PACS SECURITY DOOR (C)
NTS	

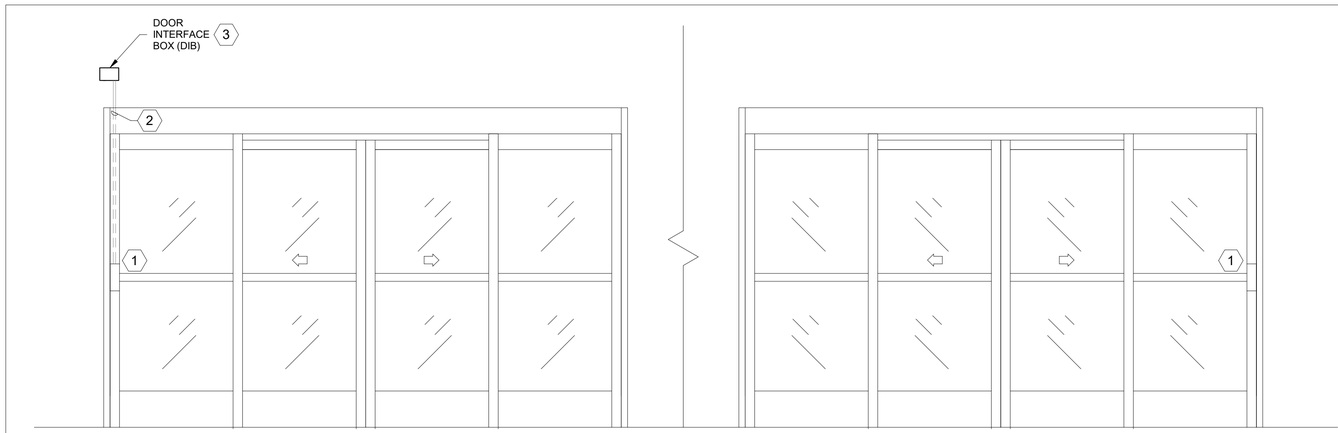

NOTES

1. ROUGH IN NARROW SWITCH BOX IN MULLION
2. ROUTE 1/2" CONDUIT TO DIB.
3. PROVIDE 12"X12" DOOR INTEFACE BOX. COORDINATE WITH ARCHTECUTAL PLANS FOR EXACT LOCATION

D	PACS SECURITY DOOR (D)
NTS	

FOR PERMIT & BIDDING ONLY

AVCON

TRANSFORMING TODAY'S IDEAS INTO TOMORROW'S REALITY

RICHARD CREAVALLE, P.E.
FL LICENSE NO.:59885
FBPR CERTIFICATE OF AUTHORIZATION NO. 5057

NO.	DATE	REVISION	BY

PACS SECURITY DOOR DETAILS

RELEASE FOR BID

AIRPORT TERMINAL AND HANGAR DEVELOPMENT

PREPARED FOR

DEFUNIAK SPRINGS MUNICIPAL AIRPORT

DESIGNED BY:	FB
DRAWN BY:	FB
CHECKED BY:	KB
APPROVED BY:	RC
PROJECT NO:	2019.028.01
DATE:	November 1, 2021

SHEET NUMBER

T-503

THIS DOCUMENT CONTAINS PRIVILEGED AND PROPRIETARY INFORMATION, ALL OF WHICH IS EXPRESSLY PROVIDED BY AVCON, INC., FOR USE BY THE INTENDED RECIPIENT, AND FOR A SPECIFIC PURPOSE. WITHOUT THE EXPRESS WRITTEN CONSENT OF AVCON, INC. ANY DISTRIBUTION, REPRODUCTION, OR OTHER USE OF THIS DOCUMENT, IN WHOLE OR IN PART, IS STRICTLY PROHIBITED.

PLUMBING SYMBOLS

	COLD WATER
	HOT WATER SUPPLY
	HOT WATER RETURN
T	TEMPERED WATER
140°	140° HOT WATER
	WASTE OR SANITARY
	WASTE OR SANITARY BELOW GRADE
2"V	VENT AND SIZE
S	STORM PIPE BELOW GRADE
S	STORM PIPE ABOVE GRADE
CD	CONDENSATE DRAIN
A	COMPRESSED AIR
	ACID VENT
AW	ACID WASTE
G	GAS
	BALANCING VALVE
	CHECK VALVE VALVE
HB/WH	HOSE BIBB/WALL HYDRANT
	PRESSURE REDUCING VALVE
	SHUT OFF VALVE
	DIRECTION OF FLOW
	REDUCER OR INCREASER
	TOP CONNECTION, 45 OR 90 DEGREES
	BOTTOM CONNECTION, 45 OR 90 DEGREES
	SIDE CONNECTION
	CAPPED OUTLET
	DROP IN PIPING
	RISE IN PIPING
	UNION
	SOLENOID VALVE
	WATER FLOW MEASURING DEVICE
	PRESSURE GAUGE
	VALVE IN RISER
	FLOOR DRAIN
	WALL CLEANOUT
	FLOOR CLEANOUT

NOTE: NOT ALL SYMBOLS NECESSARILY USED ON THE DRAWINGS.

PLUMBING SHEET INDEX

P-001	SYMBOLS LEGEND AND SCHEDULES - PLUMBING
P-101	OVERALL PLUMBING FLOOR PLAN
P-102	PLUMBING 1ST FLOOR PLAN - AREA A
HP-101	HANGAR PLUMBING PLAN
P-103	PLUMBING ROOF PLAN
P-301	PLUMBING RISER DIAGRAMS
P-302	PLUMBING RISER DIAGRAMS
P-501	PLUMBING DETAILS
P-502	PLUMBING DETAILS
P-503	PLUMBING DETAILS

PLUMBING ABBREVIATIONS

A/E	ARCHITECT/ENGINEER
ACW	AUTOMATIC CLOTHES WASHER
ADA	AMERICANS WITH DISABILITIES ACT
ASME	AMERICAN SOCIETY OF MECHANICAL ENGINEERS
ASTM	AMERICAN SOCIETY FOR TESTING AND MATERIALS
BFF	BELOW FINISHED FLOOR
BHP	BRAKE HORSEPOWER
BTU	BRITISH THERMAL UNIT
C/I	CONTRACTORS INSTALLED
CD	CONDENSATE
CO	CLEANOUT
CONN	CONNECTION
CONT	CONTINUOUS
CV	CHECK VALVE
CW	COLD WATER
DIA	DIAMETER
DN	DOWN
DOMW	DOMESTIC WATER
DWG	DRAWING
ECO	EXTERIOR CLEAN OUT
F	DEGREES FAHRENHEIT
FCO	FLOOR CLEAN OUT
FD	FLOOR DRAIN
FBC	FLORIDA BUILDING CODE
FCW	FILTERED COLD WATER
GAL	GALLONS
GPM	GALLONS PER MINUTE
HB	HOSE BIBB
HR	HOUR
HW	HOT WATER
HWR	HOT WATER RETURN
I.E.	INVERT ELEVATION
IR	INDIRECT RECEPTOR
MAX	MAXIMUM
MIN	MINIMUM
NFPA	NATIONAL FIRE PROTECTION ASSOCIATION
NTS	NOT TO SCALE
O/F	OWNER FURNISHED
PD	PUMP FURNISHED
PDI	PLUMBING DRAINAGE INSTITUTE
PRL	PRESSURE RELIEF LINE
PSIG	POUNDS PER SQUARE INCH
RWL	RAIN WATER LEADER
RM	ROOM
SPC	STANDARD PLUMBING CODE
ST	STORM
STO	STORM OVERFLOW
T&P	TEMPERATURE & PRESSURE
TPV	TRAP PRIMER VALVE
TYP	TYPICAL
U/G	UNDERGROUND
W/	WITH
WCO	WALL CLEAN OUT

PLUMBING GENERAL NOTES

1. CONTRACTOR SHALL BE RESPONSIBLE TO PERFORM ALL WORK IN STRICT ACCORDANCE WITH THE 2020 FLORIDA BUILDING CODE, WITH ALL APPLICABLE LOCAL CODES AND ORDINANCES.
2. CONTRACTOR SHALL VERIFY AND CORRECT AS REQUIRED TO MEET ALL CODES AND REGULATIONS ANY POSSIBLE DISCREPANCIES BETWEEN TYPE AND SIZE OF CONNECTION SPECIFIED IN PLUMBING FIXTURE SCHEDULE AND FIXTURES ACTUALLY INSTALLED ON THE SITE.
3. ALL SANITARY PIPING 3" AND LARGER SHALL HAVE A 1/8" PER FOOT SLOPE. ALL SANITARY PIPING SMALLER THAN 3" SHALL HAVE A SLOPE OF 1/4" PER FOOT UNLESS OTHERWISE NOTED.
4. VENT PIPING SHOWN ON FLOOR PLAN IS ONLY INDICATIVE EXCEPT FOR VTR LOCATIONS.
5. VALVES AND FITTINGS SHALL BE SAME SIZE OF LINE ON WHICH THEY ARE LOCATED.
6. CONTRACTOR SHALL COORDINATE ALL WORK WITH OTHER TRADES.
7. CONTRACTOR SHALL FIELD VERIFY ALL GIVEN MEASUREMENTS PRIOR TO LAYING AND CONNECTING ALL PIPING SYSTEMS AND NOTIFY ARCHITECT OF ANY DISCREPANCIES.
8. INSTALL WATER HAMMER SHOCK ARRESTORS AT EACH FIXTURE OR BATTERY OF FIXTURES WHERE REQUIRED. ARRESTORS SHALL BE FACTORY-FABRICATED INSTALL ARRESORS AND SIZE PER PLUMBING AND DRAINAGE INSTITUTE STANDARD P.D.I WH-201.
9. AIR CHAMBERS SHALL NOT BE CONSIDERED AN EQUAL TO WATER ARRESTORS AS SPECIFIED.
10. CONTRACTOR SHALL BE RESPONSIBLE FOR MAINTAINING FIRE RATING AND WEATHER PROOFING INTEGRITY OF ALL PIPING AND PENETRATIONS.
11. ALL WATER SUPPLY AND SANITARY LINES SHALL BE RUN AS CLOSE TO PLANS AS POSSIBLE WITH NO CHANGES IN SIZING.
12. CONTRACTOR SHALL BE RESPONSIBLE FOR PROVIDING ALL NECESSARY SUPPORTING DEVICES FOR ALL FIXTURES INCLUDED IN CONTRACT OR HEREIN SPECIFIED OR OTHERWISE.
13. ROUTE ALL PIPING CONCEALED ABOVE CEILINGS, WITHIN WALLS, OR IN CHASES. PIPING EXPOSED SHALL BE SLOPED AND PAINTED TO MATCH ARCHITECTURAL FINISHES. PIPING IN MECHANICAL ROOMS MAY BE EXPOSED.
14. SEE ARCHITECTURAL DRAWINGS FOR EXACT LOCATIONS OF PLUMBING FIXTURE MOUNTING HEIGHTS AND DIMENSIONS.
15. CONTRACTOR SHALL INSTALL DIELECTRIC UNIONS AT CONNECTIONS OF DISSIMILAR METALS.
16. CONTRACTOR SHALL ROUGH-IN ALL WASTES AND SUPPLIES TO SPECIAL EQUIPMENT ACCORDING TO MANUFACTURER'S SHOP DRAWINGS AND MAKE FINAL CONNECTIONS. ALL SUPPLIES SHALL BE VALVED. INSTALL VACUUM BREAKERS WHERE REQUIRED BY CODE.
17. ALL WATER PIPING INSTALLED IN EXTERIOR WALLS SHALL BE PLACED ON THE INTERIOR SIDE OF THE WALL. SO THAT WALL INSULATION CAN BE PLACED ON THE EXTERIOR SIDE OF THE PIPING.
18. DO NOT PENETRATE WALL FOOTINGS WITH PIPING, COORDINATE WITH GENERAL CONTRACTOR TO DROP FOOTINGS AS REQUIRED TO CLEAR PLUMBING SERVICES WHERE ABSOLUTELY NECESSARY. ALL PIPING PENETRATING A BEARING WALL OR FOOTING MUST BE SLEEVED AND LOCATION APPROVED BY STRUCTURAL ENGINEER.
19. PIPING SHALL ESSENTIALLY BE ROUTED AND LOCATED AS INDICATED ON THE DRAWINGS: HOWEVER, ACTUAL PLACEMENT SHALL BE VERIFIED BY CONFIRMING EXACT LOCATION OF STRUCTURES AND OTHER UTILITIES IN THE FIELD AND BY CAREFUL LAYOUT PRIOR TO EXECUTION OF THE WORK. DRAWINGS ARE GENERALLY DIAGRAMMATIC. PIPING SHALL BE CONCEALED EXCEPT WHERE SPECIFICALLY NOTED OTHERWISE.
20. HOT AND COLD WATER SUPPLY PIPES AND DRAIN PIPES UNDER HANDICAPPED LAVATORIES SHALL BE INSULATED PER AMERICANS WITH DISABILITIES ACT, WITH FACTOR PREFABRICATED MICROBIAL PVC RESIN SEAMLESS INSULATION. BASIS OF DESIGN: ZURN INDUSTRIES, INCL.
21. VALVES ABOVE HARD CEILINGS SHALL BE PROVIDED WITH CEILING ACCESS HATCHES PER ARCHITECTURAL SPECIFICATIONS.
22. NOT ALL PIPE SIZES ARE INDICATED IN PLANS. REFER TO ISOMETRICS AND PLUMBING FIXTURE EQUIPMENT SCHEDULE FOR SIZES.
23. NOT ALL VALVING IS INDICATED ON PLANS SHEETS. REFER TO ISOMETRICS AND DETAILS FOR ADDITIONAL VALVING.
24. ALL PIPING ABOVE GRADE OR IN AN EXTERIOR ENVIRONMENT SHALL BE FREEZE PROTECTED BY ADDING INSULATION PER SPECIFICATION 22 07 00.
25. IN ADDITION TO PROVIDING VALVE TAGS, CONTRACTOR SHALL AFFIX A LABEL TO CEILING GRID OR ACCESS DOOR INDICATING VALVE FUNCTION AND NUMBER.
26. CONTRACTOR SHALL COORDINATE EXACT PLUMBING FIXTURE LOCATION WITH DIMENSIONED ARCHITECTURAL PLANS PRIOR TO ROUGHING IN. THE PLUMBING DRAWINGS ARE DIAGRAMMATIC AND DO NOT REPRESENT EXACT LOCATIONS.
27. PROVIDE WALL CLEANOUT AT THE BASE OF EACH SANITARY AND STORM VERTICAL STACK AS REQUIRED PER FLORIDA PLUMBING CODE. PROVIDE CLEANOUT ACCESS COVERS.
28. PROVIDE ALL OFFSETS AND FITTINGS AND MAKE CONNECTION TO SITE UTILITIES.
29. CONCEAL PIPING ABOVE CEILINGS, WITHIN WALLS OR CHASES EXCEPT IN MECHANICAL ROOMS OR AS SPECIFICALLY NOTED. PROVIDE ACCESS PANELS FOR ALL VALVES CONCEALED IN WALLS OR ABOVE NON-ACCESSABLE CEILINGS.
30. SLEEVE AND FIRE STOP PENETRATIONS OF RATED WALLS, FLOORS, CEILINGS AND ROOFS. FLASH AND COUNTERFLASH ROOF PENETRATIONS.
31. PROVIDE, WHEN REQUIRED BY CODE, A 2" MIN. AIR GAP SERVING INDIVIDUAL FIXTURES, DEVICES, APPLIANCES AND APPARATUS.

PLUMBING FIXTURE SCHEDULE

FIXTURE TAG	DESCRIPTION	REMARKS	WASTE	VENT	CW	HW	MANUFACTURER	MODEL
AAV-1	AIR ADMITTANCE VALVE	ABS CONSTRUCTION, ASSEE STD 1050, NSF/ANSI STD 14		2"			STUDOR	MINI-VENT
CD-1	CONDENSATE DRAIN	EPOXY COATED CAST IRON DRAIN, 5" ROUND NICKEL BRONZE STRAINER, RAISED FLANGE, REVERSIBLE CLAMPING COLLAR.	3"				WATTS	FD-100-ER
DSP-1	DISPOSER	1 HP MOTOR, 120V, 1Ø. USE CORROSION RESISTANT CHAMBER WITH JAM RESISTANT STAINLESS STEEL GRINDER. PROVIDE SHUT-OFF VALVE UNDER CABINET TO CW CONNECTION.	1 1/2"		1/2"		INSINKERATOR	SS100
ECO	EXTERNAL CLEANOUT	EPOXY COATED CAST IRON CLEANOUT WITH 5" ROUND ADJUSTABLE HEAVY DUTY DUCTILE IRON TOP, REMOVABLE GASKETED BRASS CLEANOUT PLUG.	VARIES				WATTS	CO-200-RX-4
ES-1	ADA COMBINATION EMERGENCY SHOWER & EYE WASH	BARRIER-FREE COMBINATION FULL SHOWER, EYE AND FACE WASH. GALVANIZED STEEL PIPE WITH MINIMUM 9" FLOOR FLANGE. STAINLESS STEEL BOWL, STAY OPEN BRASS BALL VALVE ASSEMBLY WITH ADA PULL ROD. PROVIDE AND INSTALL VALVES, SUPPLIES AND STOPS APPROVED BY FBC FOR CO			1-1/4"		BRADLEY	S19341BF
EWC-1	ELECTRIC WATER COOLER	WALL MOUNTED, STAINLESS STEEL , BI-LEVEL, VANDAL RESISTANT 50F OUTLET. 3/8 STOP, INSULATED COLD LINES, CHROME PLATED P-TRAP. CARRIER WITH P-TRAP HANGER PLATE AND BACKING, CARBON FILTER, BOTTLE FILLING STATION	2"	1 1/2"	1/2"		HALSEY TAYLOR	OVL-II HTHB-OVLSER-I
FCO	FLOOR CLEANOUT	EPOXY COATED CAST IRON CLEANOUT WITH 5 IN ROUND ADJUSTABLE NICKEL BRONZE TOP, REMOVABLE GASKETED BRASS CLEANOUT PLUG.	VARIES				WATTS	CO-200-P-R
FD-1	FLOOR DRAIN	CAST IRON BODY, FLASHING CLAMP AND ADJUSTABLE NICKEL BRONZE TOP, TRAP GUARD.		2"			ZURN	ZN415B
HB-1	HOSE BIBB	VANDAL RESISTANT, 3/4" MALE HOSE CONNECTION.			3/4"		WOODFORD	24
IB-1	ICE-MAKER/REFRIGERATOR OUTLET BOX	WALL OUTLET BOX WITH BUILT-IN HAMMER ARRESTORS, QUARTER TURN VALVES. WHITE PLASTIC, RECESSED, FIRE RATED. 1/2" INLET AND 1/4" COMPRESSION OUTLET.			1/2"		SIOUX CHIEF	696 SERIES
L-1	LAVATORY (ACCESSIBLE)	VITREOUS CHINA, WALL HUNG, FRONT OVERFLOW, CONCEALED ARM CARRIER, 4" CENTERS, 0.5 GPM FAUCET, LEVER HANDLES, STRAINER, TRAP, STOPS, ADA COMPLIANT. PROVIDE WITH MIXING VALVE MX-2.	2"	1 1/2"	1/2"	1/2"	AMERICAN STANDARD AMERICAN STANDARD	0355.012 7500.175
L-2	LAVATORY	VITREOUS CHINA, UNDERCOUNTER MOUNT, 0.5 GPM AERATOR, FRONT OVERFLOW, SINGLE HOLE, LEVER HANDLE, STRAINER, TRAPS, STOPS. PROVIDE WITH MIXING VALVE MX-2.	2"	1 1/2"	1/2"	1/2"	KOHLER KOHLER	K-2210 K-99760-4
L-3	SINGLE BOWL SINK	VITREOUS CHINA, UNDERCOUNTER MOUNT, 6" DEEP SINK, DECK MOUNT FAUCET WITH GOOSENECK SWING SPOUT, LEVER HANDLE, 1.5 GPM, STRAINER, TRAPS, STOPS. PROVIDE WITH MIXING VALVE MX-2.	2"	2"	1/2"	1/2"	KOHLER ELKAY	K-2882 LK6000
MS-1	MOP SINK	TERRAZZO, FLOOR MOUNTED 24"x24"x12" MOP SINK WITH STAINLESS STEEL CURB CAP. PROVIDE TRAP, STRAINER PROVIDE SERVICE FAUCET, MOP BRACKET, HOSE RACK. STAINLESS STEEL WALL GUARD. PROVIDE WITH MIXING VALVE MX-2.	3"	2"	3/4"	3/4"	FIAT TS BRASS	TSB3000-MSG B0665-BSTR
SH-1	SHOWER (ACCESSIBLE)	HAND SHOWER W/ 60" HOSE, 36" METAL SLIDE BAR, 1.5 GPM FLOW RESTRICTOR, ANTI-SCALD THERMOSTATIC MIXING VALVE, INTEGRAL STOPS. PROVIDE FLOOR DRAIN WITH ADJUSTABLE COLLAR AND 5" SQ NICKEL BRONZE VANDAL RESISTANT STRAINER.	2"	2"	1/2"	1/2"	AMERICAN STANDARD ZURN	TU662SG.211 ZN415B-A5
SK-1	DOUBLE BOWL SINK (ACCESSIBLE)	DOUBLE BOWL SINK, DROP-IN STAINLESS STEEL, 6-1/2" DEEP SINK, STRAINER, TRAP, STOPS, SINGLE HOLE, TOP MOUNT FAUCET WITH GOOSENECK SWING SPOUT, LEVER HANDLES, 1.5 GPM. PROVIDE WITH MIXING VALVE MX-2.	2"	2"	1/2"	1/2"	ELKAY	LRAD292265 LK6000
SK-2	SINGLE BOWL HAND SINK	SINGLE BOWL WALL MOUNT SINK, TYPE 304 STAINLESS STEEL, 6" DEEP BOWL, STRAINER, TRAP, STOPS, WALL MOUNT FAUCET WITH GOOSENECK SPOUT, LEVER HANDLES. PROVIDE WITH MIXING VALVE MX-2.	2"	1 1/2"	1/2"	1/2"	ELKAY	CHSB1716C
U-1	URINAL	VITREOUS CHINA, BARRIER FREE, LOW CONSUMPTION 0.125 GPF, WASHOUT, 3/4" INLET SPUD, MANUAL FLUSH VALVE, DIAPHRAGM TYPE.	2"	2"	3/4"		AMERICAN STANDARD	6042.453
WC-1	WATER CLOSET	ELONGATED VITREOUS CHINA, WALL MOUNTED, 1-PIECE (14" HIGH) SIPHON JET MANUAL FLUSH VALVE, DIAPHRAGM TYPE 1.28 GPF, WITH OPEN TOIL SEAT & HARDWARE PROVIDE MOUNTING RING, BOLTS, STOP.	4"	2"	1"		AMERICAN STANDARD	2859.128
WC-2	WATER CLOSET (ACCESSIBLE)	ELONGATED VITREOUS CHINA, WALL MOUNTED, 1-PIECE (14" HIGH) SIPHON JET MANUAL FLUSH VALVE, DIAPHRAGM TYPE 1.28 GPF, WITH OPEN TOIL SEAT & HARDWARE PROVIDE MOUNTING RING, BOLTS, STOP, ADA COMPLIANT.	4"	2"	1"		AMERICAN STANDARD	2859.128
WC-3	WATER CLOSET (ACCESSIBLE)	ELONGATED VITREOUS CHINA, FLOOR MOUNTED, 1-PIECE (14" HIGH) SIPHON JET MANUAL FLUSH VALVE, DIAPHRAGM TYPE 1.28 GPF. PROVIDE OPEN FRONT SEAT & MOUNTING HARDWARE, MOUNTING RING, BOLTS, AND STOP, ADA COMPLIANT.	4"	2"	1"		AMERICAN STANDARD	2854.128
WCO	WALL CLEANOUT	THREADED BRASS CLEANOUT PLUG, STAINLESS STEEL ACCESS COVER, VANDAL PROOF SCREW	VARIES				WATTS	CO-590-RD
WH-1	FREEZE-PROOF WALL HYDRANT	WALL HYDRANT, FREEZE PROOF, ANTI-SIPHON, BRASS CASING, VACUUM BREAKER, ALL BRONZE INTERIOR PARTS AND NON TURNING OPERATING ROD WITH FREE FLOATING COMPRESSION CLOSURE VALVE WITH CHROME FINISH AND OPERATING KEY.			3/4"		WATTS	HY-420
YH-1	YARD HYDRANT	NON-FREEZE POST HYDRANT, EPOXY COATED CAST IRON HOUSING, LOOSE KEY.			3/4"		WATTS	HY-600

ELECTRIC WATER HEATER SCHEDULE

1. PROVIDE A 5 GALLON EXPANSION TANK FOR EWH-1 AND PRE-CHARGE TO SYSTEM PRESSURE. PROVIDE WATTS PLT-12 OR APPROVED EQUIVALENT.
3. RECIRCULATION PUMP RCP-1 SHALL HAVE CAPACITY OF 1.0 GPM AT 5' TDH, GRUNDFOS UP 15-10B5, 1/25 HP, 120V/1PH.

MARK	STORAGE CAPACITY	KW	ELECTRICAL DATA			WATER HEATER DATA		MANUFACTURER	MODEL NO.
			VOLTS	PHASE	HZ	TEMPERATURE RISE	HEATER RECOVERY		
EWH-1	80	9.0	208	1	60	80 °F	46	A.O. Smith	DEN-80-9

MIXING VALVE SCHEDULE

MARK	OUTLET SIZE	MIN FLOW	SET TEMP	DESCRIPTION	MANUFACTURER	MODEL
MX-1	1 1/2"	1.5 GPM	120 °F	THE VALVE SHALL BE ASSE 1017 LISTED. IT SHALL HAVE A LEAD FREE BRASS BODY. THE VALVE SHALL INCLUDE INTEGRAL CHECK VALVES AND AN INTEGRAL LIQUID-FILLED THERMOSTAT. PROVIDE FACTORY SUPPLIED WALL MOUNTING BRACKET.	BRADLEY	S59-3045-B
MX-2	1/2"	0.2 GPM	110 °F	THE VALVE SHALL BE ASSE 1070 LISTED. IT SHALL HAVE A LEAD FREE BRASS "H" PATTERN BODY. THE VALVE SHALL INCLUDE INTEGRAL CHECK VALVES, INTEGRAL SCREENS AND AN ADJUSTMENT NUT WITH LOCKING FEATURE.	BRADLEY	S59-4000A

HOT WATER CIRCULATING PUMP SCHEDULE

1. SEE PLANS FOR LOCATIONS

MARK	FLUID DATA		ELECTRICAL DATA		MANUFACTURER	MODEL NO.
	FLOW (GPM)	HEAD (FT)	MOTOR HP	VOLT/PHASE		
RCP-1	1 GPM	5	1/25	120 V / 1	GRUNDFOS	UP 15-10B5

DRAFT
NOT FOR CONSTRUCTION

AVCON

TRANSFORMING TODAY'S IDEAS INTO TOMORROW'S REALITY

ZEMP PEPPER, P.E.
FL LICENSE NO.:41147
FBPR CERTIFICATE OF AUTHORIZATION NO. 5057

NO.	DATE	REVISION	BY

SYMBOLS LEGEND AND SCHEDULES - PLUMBING

RELEASE FOR BID

AIRPORT TERMINAL AND HANGAR DEVELOPMENT

PREPARED FOR

DEFUNIAK SPRINGS MUNICIPAL AIRPORT

DESIGNED BY: **J. CAGLE**
DRAWN BY: **J. CAGLE**
CHECKED BY: **Z. PEPPER**
APPROVED BY: **Z. PEPPER**
PROJECT NO: **2019.028.01**
DATE: **November 1, 2021**

SHEET NUMBER

P-001

THIS DOCUMENT CONTAINS PRIVILEGED AND PROPRIETARY INFORMATION, ALL OF WHICH IS EXPRESSLY PROVIDED BY AVCON, INC., FOR USE BY THE INTENDED RECIPIENT, AND FOR A SPECIFIC PURPOSE, WITHOUT THE EXPRESS WRITTEN CONSENT OF AVCON, INC. ANY DISTRIBUTION, REPRODUCTION, OR OTHER USE OF THIS DOCUMENT, IN WHOLE OR IN PART, IS STRICTLY PROHIBITED.

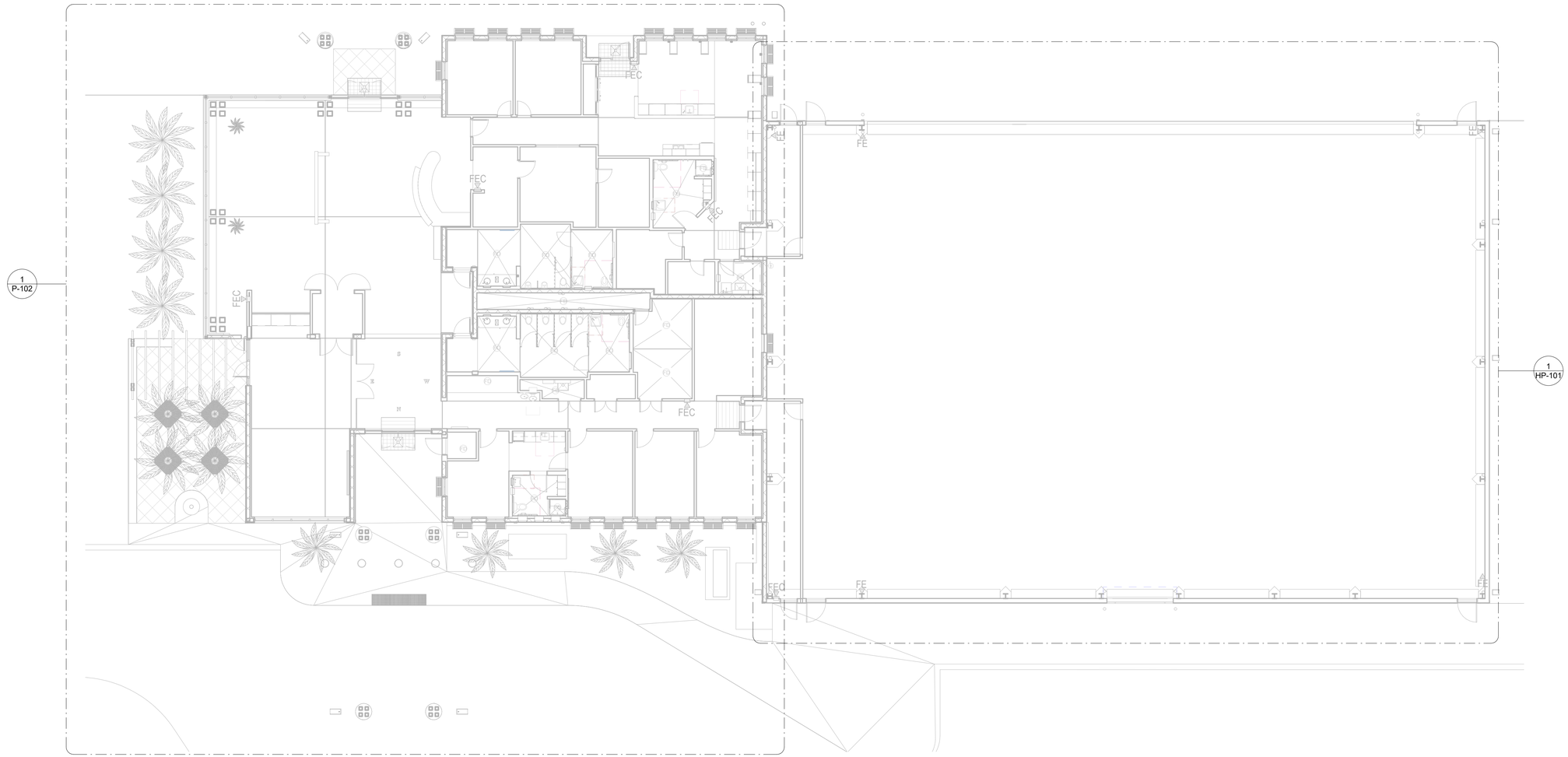

1 OVERALL PLUMBING FLOOR PLAN
3/32" = 1'-0"

DRAFT
NOT FOR CONSTRUCTION

AVCON

TRANSFORMING TODAY'S IDEAS INTO TOMORROW'S REALITY

ZEMP PEPPER, P.E.
FL LICENSE NO.:41147
FBPR CERTIFICATE OF AUTHORIZATION NO. 5057

NO.	DATE	REVISION	BY

OVERALL PLUMBING FLOOR PLAN

RELEASE FOR BID

AIRPORT TERMINAL AND HANGAR DEVELOPMENT

PREPARED FOR

DEFUNIAK SPRINGS MUNICIPAL AIRPORT

DESIGNED BY:	**J. CAGLE**
DRAWN BY:	**J. CAGLE**
CHECKED BY:	**Z. PEPPER**
APPROVED BY:	**Z. PEPPER**
PROJECT NO:	**2019.028.01**
DATE:	**November 1, 2021**

SHEET NUMBER

P-101

THIS DOCUMENT CONTAINS PRIVILEGED AND PROPRIETARY INFORMATION, ALL OF WHICH IS EXPRESSLY PROVIDED BY AVCON, INC., FOR USE BY THE INTENDED RECIPIENT, AND FOR A SPECIFIC PURPOSE. WITHOUT THE EXPRESS WRITTEN CONSENT OF AVCON, INC. ANY DISTRIBUTION, REPRODUCTION, OR OTHER USE OF THIS DOCUMENT, IN WHOLE OR IN PART, IS STRICTLY PROHIBITED.

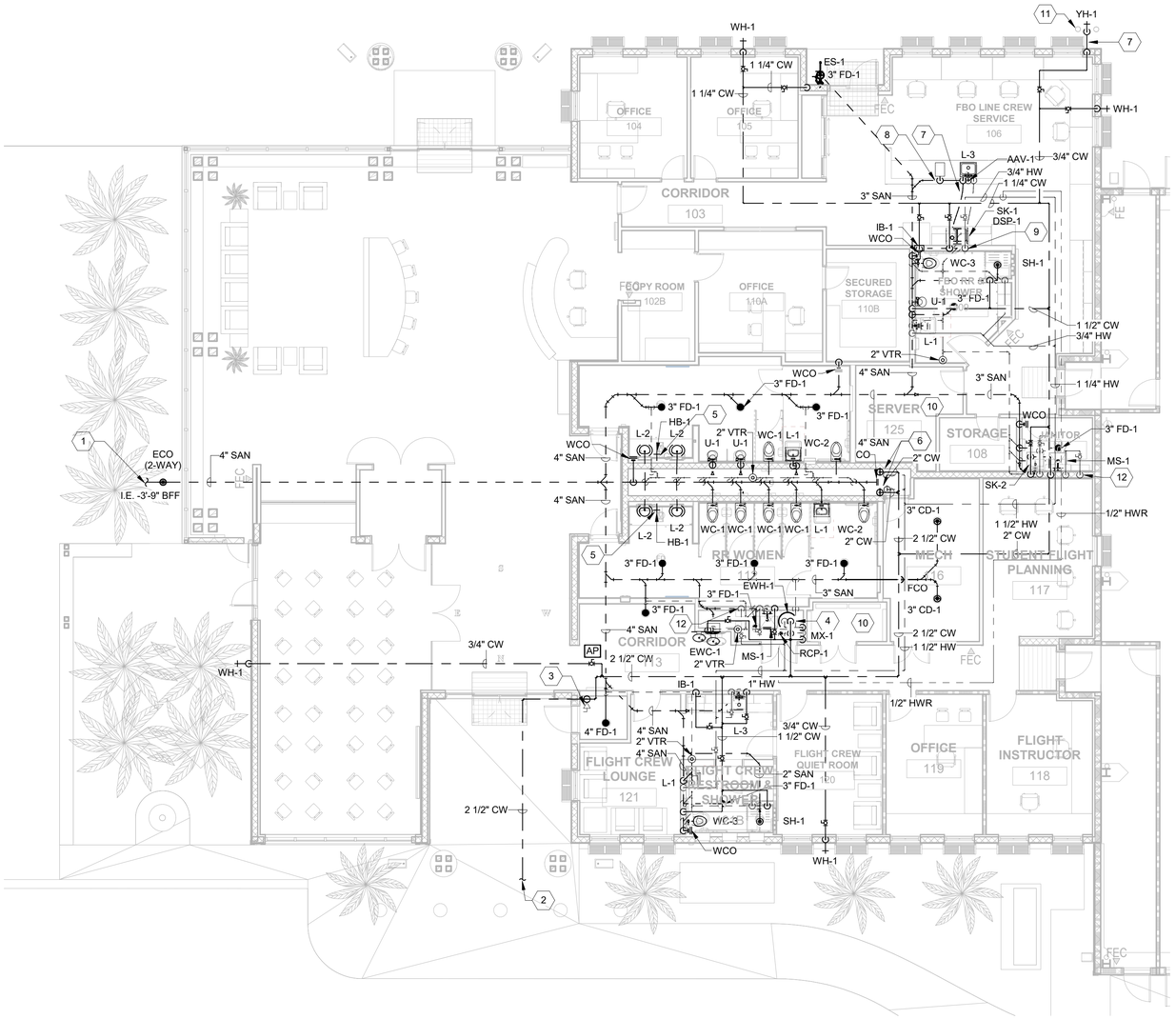

1 PLUMBING 1ST FLOOR PLAN - AREA A
1/8" = 1'-0"

PLUMBING GENERAL NOTES

A. CONTRACTOR SHALL FIELD VERIFY EXISTING CONDITIONS PRIOR TO CONSTRUCTION AND SHALL BRING ANY DISCREPANCIES, UNFORESEEN CONDITIONS OR INTERFERENCES TO THE ATTENTION OF THE ARCHITECT/ENGINEER. NO CLAIMS FOR ADDITIONAL WORK DO TO OBSERVABLE CONDITIONS WILL BE CONSIDERED.

B. ALL WORK AND EQUIPMENT SHALL MEET THE REQUIREMENTS OF THE MOST RECENTLY REVISED VERSION OF ALL APPLICABLE LAWS, RULES, REGULATIONS, AND ORDINANCES OF FEDERAL, STATE, AND LOCAL AUTHORITIES, WHETHER INDICATED ON THE DRAWINGS OR NOT.

C. ADHERE TO THE DRAWINGS WHEN REQUIREMENTS ARE STRICTER THAN CODE REQUIREMENTS AND ARE PERMITTED UNDER THE CODE.

D. REPORT ANY ALTERATION TO AND/OR DEVIATIONS FROM THE DRAWING AS REQUIRED BY THE ABOVE AUTHORITIES TO THE ARCHITECT/ENGINEER AND SECURE HIS APPROVAL BEFORE STARTING ALTERATIONS.

E. THE CONTRACTOR SHALL REQUEST SUPPLEMENTARY INSTRUCTIONS FROM THE ARCHITECT/ENGINEER IN ALL CASES OF DOUBT AS TO THE WORK INTENDED, OR IF ADDITIONAL EXPLANATION IS NEEDED.

F. PIPE ROUTING SHOWN IS SCHEMATIC AND IS INTENDED TO INDICATE GENERAL ROUTING. PLUMBING CONTRACTOR SHALL PROVIDE ANY ADDITIONAL OFFSETS AND FITTINGS REQUIRED FOR PROPER INSTALLATION AND TO MAINTAIN CLEARANCES AS ENCOUNTERED IN THE FIELD.

G. PROVIDE EQUIPMENT CLEARANCES IN ACCORDANCE WITH THE MANUFACTURER'S INSTALLATION INSTRUCTIONS AND IN ACCORDANCE WITH ALL APPLICABLE CODES.

H. PROVIDE FIRE STOPPING AT ALL PENETRATIONS OF RATED ASSEMBLIES (SLAB AND ANY RATED WALLS).

I. NOTE ALL GRAVITY DRAINAGE PIPING SHALL BE SLOPED AT 1/8" PER FOOT UNLESS NOTED OTHERWISE.

J. REFER TO ARCHITECTURAL PLANS FOR DRAINAGE SYSTEM UTILIZING DOWNSPOUTS AND GUTTERS.

K. INVERT ELEVATIONS REFERENCED TO FINISH FLOOR ELEVATION AT 0'-0".

PLUMBING KEY NOTES

1	SANITARY POINT OF CONNECTION TO SITE CIVIL, REFERENCE CIVIL DRAWINGS FOR CONTINUATION.
2	DOMESTIC WATER SERVICE POINT OF CONNECTION TO SITE CIVIL, REFERENCE CIVIL DRAWINGS FOR CONTINUATION.
3	PROVIDE DOMESTIC WATER SHUT-OFF VALVE AT 5-0" AFF MAXIMUM.
4	PROVIDE NEW ELECTRIC WATER HEATER AS SHOWN. REFERENCE DETAIL 3/P-501 AND ELECTRIC WATER HEATER SCHEDULE ON SHEET P-001.
5	PROVIDE HOSE BIBB HB-1 UNDER COUNTER FOR WASH DOWN.
6	LOCATE DOMESTIC WATER SHUT-OFF VALVES FOR MEN'S AND WOMEN'S RESTROOMS IN AN ACCESSIBLE LOCATION.
7	PROVIDE SOFT COPPER PIPING BELOW SLAB WITH NO JOINTS, PROVIDE PE ENCASEMENT UNDER SLAB.
8	PROVIDE 1/2" CW CONNECTION WITH CHROME PLATED STOP AND ESCUTCHEON. PROVIDE FILTER UNDERCOUNTER AS COORDINATED WITH COFFEE MAKER MANUFACTURER REQUIREMENTS AND MILLWORK.
9	PROVIDE 1/2" HW VALVE CONNECTION UNDERCOUNTER FOR DISHWASHER SUPPLY. PROVIDE DRAIN CONNECTION FROM DISHWASHER TO SK-1 TRAP. REFFER TO ARCHITECTURAL PLANS FOR OVERFLOW NOZZLE ELEVATION.
10	DO NOT ROUTE OVERHEAD PIPING OVER ELECTRICAL/IDF ROOMS.
11	PROVIDE BOLLARDS AT YARD HYDRANT. REFERENCE DETAIL 05/P-502.
12	PROVIDE FULL-SIZE HW CONNECTION AS REQUIRED TO CHEMICAL DISPENSER.

DRAFT
NOT FOR CONSTRUCTION

AVCON
TRANSFORMING TODAY'S IDEAS INTO TOMORROW'S REALITY

ZEMP PEPPER, P.E.
FL LICENSE NO.:41147
FBPR CERTIFICATE OF AUTHORIZATION NO. 5057

NO.	DATE	REVISION	BY

PLUMBING 1ST FLOOR PLAN - AREA A

RELEASE FOR BID

AIRPORT TERMINAL AND HANGAR DEVELOPMENT

PREPARED FOR
DEFUNIAK SPRINGS MUNICIPAL AIRPORT

DESIGNED BY:	J.CAGLE
DRAWN BY:	J. CAGLE
CHECKED BY:	Z. PEPPER
APPROVED BY:	Z. PEPPER
PROJECT NO:	2019.028.01
DATE:	November 1, 2021

SHEET NUMBER

P-102

THIS DOCUMENT CONTAINS PRIVILEGED AND PROPRIETARY INFORMATION, ALL OF WHICH IS EXPRESSLY PROVIDED BY AVCON, INC., FOR USE BY THE INTENDED RECIPIENT, AND FOR A SPECIFIC PURPOSE. WITHOUT THE EXPRESS WRITTEN CONSENT OF AVCON, INC. ANY DISTRIBUTION, REPRODUCTION, OR OTHER USE OF THIS DOCUMENT, IN WHOLE OR IN PART, IS STRICTLY PROHIBITED.

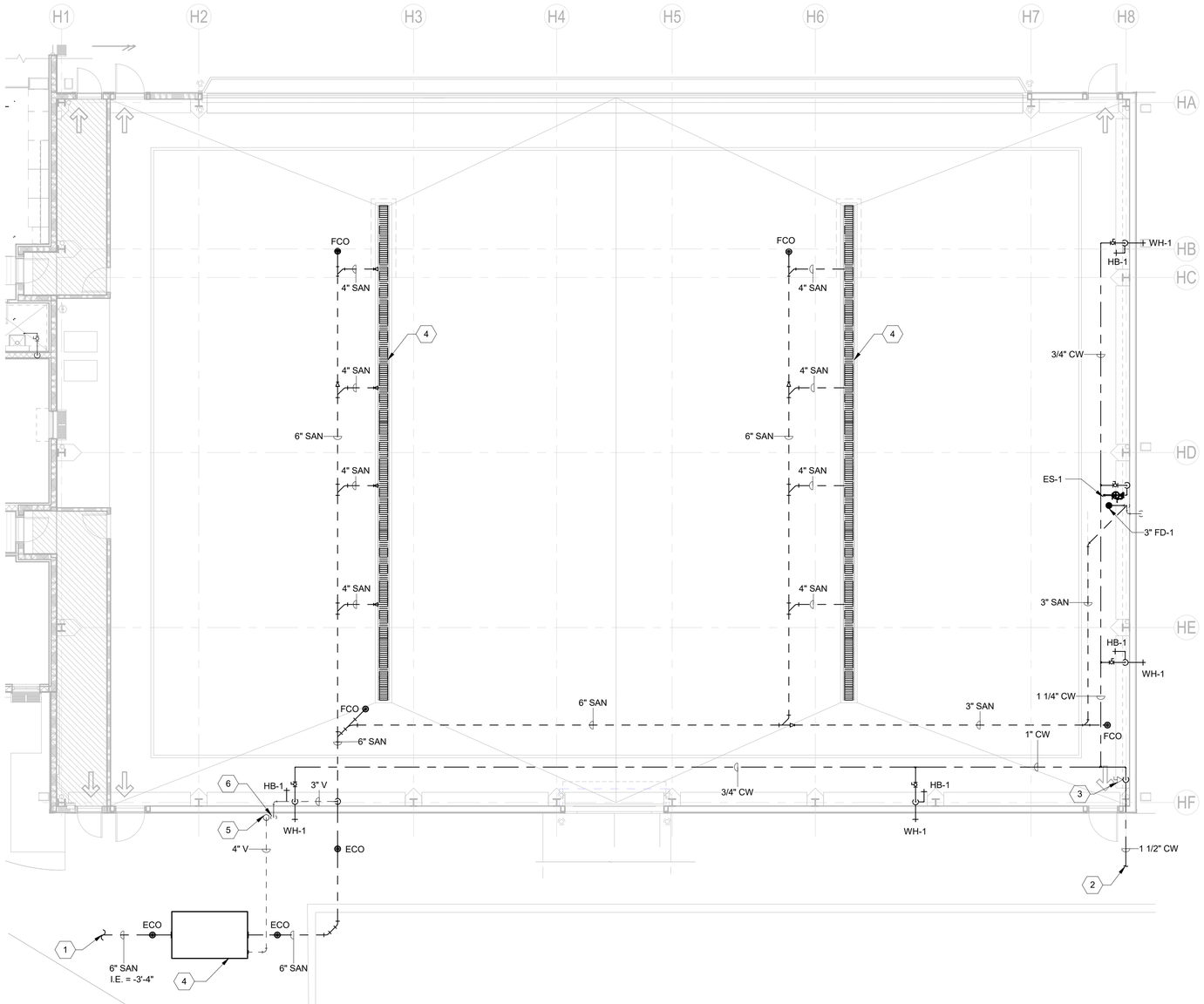

1 HANGAR PLUMBING PLAN
1/8" = 1'-0"

PLUMBING GENERAL NOTES

A. CONTRACTOR SHALL FIELD VERIFY EXISTING CONDITIONS PRIOR TO CONSTRUCTION AND SHALL BRING ANY DISCREPANCIES, UNFORESEEN CONDITIONS OR INTERFERENCES TO THE ATTENTION OF THE ARCHITECT/ENGINEER. NO CLAIMS FOR ADDITIONAL WORK DO TO OBSERVABLE CONDITIONS WILL BE CONSIDERED.

B. ALL WORK AND EQUIPMENT SHALL MEET THE REQUIREMENTS OF THE MOST RECENTLY REVISED VERSION OF ALL APPLICABLE LAWS, RULES, REGULATIONS, AND ORDINANCES OF FEDERAL, STATE, AND LOCAL AUTHORITIES, WHETHER INDICATED ON THE DRAWINGS OR NOT.

C. ADHERE TO THE DRAWINGS WHEN REQUIREMENTS ARE STRICTER THAN CODE REQUIREMENTS AND ARE PERMITTED UNDER THE CODE.

D. REPORT ANY ALTERATION TO AND/OR DEVIATIONS FROM THE DRAWING AS REQUIRED BY THE ABOVE AUTHORITIES TO THE ARCHITECT/ENGINEER AND SECURE HIS APPROVAL BEFORE STARTING ALTERATIONS.

E. THE CONTRACTOR SHALL REQUEST SUPPLEMENTARY INSTRUCTIONS FROM THE ARCHITECT/ENGINEER IN ALL CASES OF DOUBT AS TO THE WORK INTENDED, OR IF ADDITIONAL EXPLANATION IS NEEDED.

F. PIPE ROUTING SHOWN IS SCHEMATIC AND IS INTENDED TO INDICATE GENERAL ROUTING. PLUMBING CONTRACTOR SHALL PROVIDE ANY ADDITIONAL OFFSETS AND FITTINGS REQUIRED FOR PROPER INSTALLATION AND TO MAINTAIN CLEARANCES AS ENCOUNTERED IN THE FIELD.

G. PROVIDE EQUIPMENT CLEARANCES IN ACCORDANCE WITH THE MANUFACTURER'S INSTALLATION INSTRUCTIONS AND IN ACCORDANCE WITH ALL APPLICABLE CODES.

H. PROVIDE FIRE STOPPING AT ALL PENETRATIONS OF RATED ASSEMBLIES (SLAB AND ANY RATED WALLS).

I. NOTE ALL GRAVITY DRAINAGE PIPING SHALL BE SLOPED AT 1/8" PER FOOT UNLESS NOTED OTHERWISE.

J. REFER TO ARCHITECTURAL PLANS FOR DRAINAGE SYSTEM UTILIZING DOWNSPOUTS AND GUTTERS.

K. INVERT ELEVATIONS REFERENCED TO FINISH FLOOR ELEVATION AT 0'-0".

PLUMBING KEY NOTES

1	SANITARY POINT OF CONNECTION TO SITE CIVIL, REFERENCE CIVIL DRAWINGS FOR CONTINUATION.
2	DOMESTIC WATER SERVICE POINT OF CONNECTION TO SITE CIVIL, REFERENCE CIVIL DRAWINGS FOR CONTINUATION.
3	PROVIDE DOMESTIC WATER SHUT-OFF VALVE AT 5-0" AFF MAXIMUM.
4	4" WIDE TRENCH DRAIN ASSEMBLY. TRENCH DRAIN ASSEMBLY SHALL BE RATED FOR CLASS F AIRCRAFT STRUCTURAL LOADING, REFERENCE DETAIL 07/P-501.
5	TERMINATE VENT 10' AFF.
6	TERMINATE VENT A MIN. OF 10' ABOVE FINISHED GRADE. TURN DOWN AND PROVIDE SCREENED END CAP.

DRAFT
NOT FOR CONSTRUCTION

AVCON
TRANSFORMING TODAY'S IDEAS INTO TOMORROW'S REALITY

ZEMP PEPPER, P.E.
FL LICENSE NO.:41147
FBPR CERTIFICATE OF AUTHORIZATION NO. 5057

NO.	DATE	REVISION	BY

HANGAR PLUMBING PLAN

RELEASE FOR BID

AIRPORT TERMINAL AND HANGAR DEVELOPMENT

PREPARED FOR

DEFUNIAK SPRINGS MUNICIPAL AIRPORT

DESIGNED BY:	**S. BREEN**
DRAWN BY:	**S. BREEN**
CHECKED BY:	**Z. PEPPER**
APPROVED BY:	**Z. PEPPER**
PROJECT NO:	**2019.028.01**
DATE:	**November 1, 2021**

SHEET NUMBER

HP-101

THIS DOCUMENT CONTAINS PRIVILEGED AND PROPRIETARY INFORMATION, ALL OF WHICH IS EXPRESSLY PROVIDED BY AVCON, INC., FOR USE BY THE INTENDED RECIPIENT, AND FOR A SPECIFIC PURPOSE. WITHOUT THE EXPRESS WRITTEN CONSENT OF AVCON, INC. ANY DISTRIBUTION, REPRODUCTION, OR OTHER USE OF THIS DOCUMENT, IN WHOLE OR IN PART, IS STRICTLY PROHIBITED.

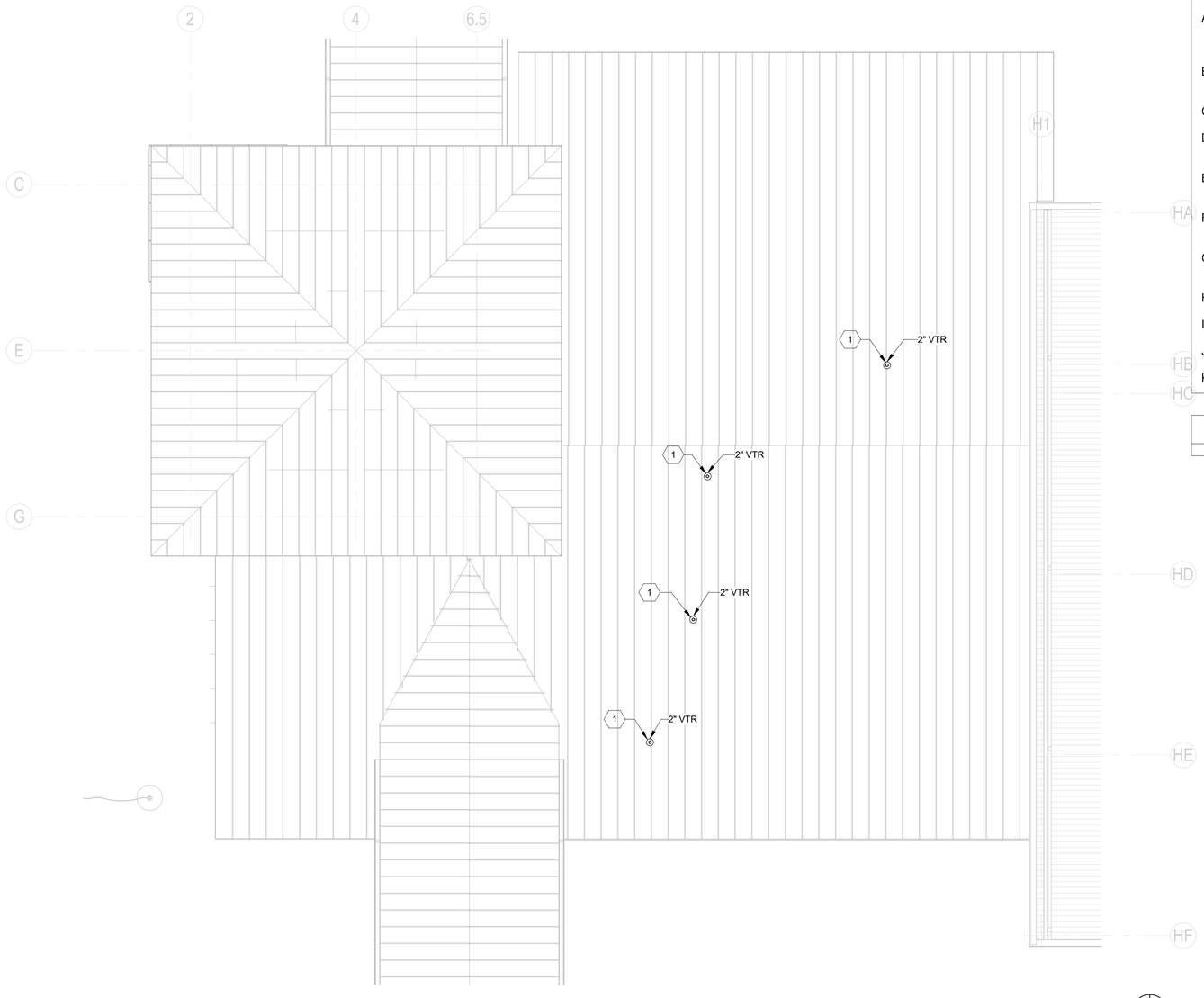

1 PLUMBING ROOF PLAN - AREA A
1/8" = 1'-0"

PLUMBING GENERAL NOTES

A. CONTRACTOR SHALL FIELD VERIFY EXISTING CONDITIONS PRIOR TO CONSTRUCTION AND SHALL BRING ANY DISCREPANCIES, UNFORESEEN CONDITIONS OR INTERFERENCES TO THE ATTENTION OF THE ARCHITECT/ENGINEER. NO CLAIMS FOR ADDITIONAL WORK DO TO OBSERVABLE CONDITIONS WILL BE CONSIDERED.

B. ALL WORK AND EQUIPMENT SHALL MEET THE REQUIREMENTS OF THE MOST RECENTLY REVISED VERSION OF ALL APPLICABLE LAWS, RULES, REGULATIONS, AND ORDINANCES OF FEDERAL, STATE, AND LOCAL AUTHORITIES, WHETHER INDICATED ON THE DRAWINGS OR NOT.

C. ADHERE TO THE DRAWINGS WHEN REQUIREMENTS ARE STRICTER THAN CODE REQUIREMENTS AND ARE PERMITTED UNDER THE CODE.

D. REPORT ANY ALTERATION TO AND/OR DEVIATIONS FROM THE DRAWING AS REQUIRED BY THE ABOVE AUTHORITIES TO THE ARCHITECT/ENGINEER AND SECURE HIS APPROVAL BEFORE STARTING ALTERATIONS.

E. THE CONTRACTOR SHALL REQUEST SUPPLEMENTARY INSTRUCTIONS FROM THE ARCHITECT/ENGINEER IN ALL CASES OF DOUBT AS TO THE WORK INTENDED, OR IF ADDITIONAL EXPLANATION IS NEEDED.

F. PIPE ROUTING SHOWN IS SCHEMATIC AND IS INTENDED TO INDICATE GENERAL ROUTING. PLUMBING CONTRACTOR SHALL PROVIDE ANY ADDITIONAL OFFSETS AND FITTINGS REQUIRED FOR PROPER INSTALLATION AND TO MAINTAIN CLEARANCES AS ENCOUNTERED IN THE FIELD.

G. PROVIDE EQUIPMENT CLEARANCES IN ACCORDANCE WITH THE MANUFACTURER'S INSTALLATION INSTRUCTIONS AND IN ACCORDANCE WITH ALL APPLICABLE CODES.

H. PROVIDE FIRE STOPPING AT ALL PENETRATIONS OF RATED ASSEMBLIES (SLAB AND ANY RATED WALLS).

I. NOTE ALL GRAVITY DRAINAGE PIPING SHALL BE SLOPED AT 1/8" PER FOOT UNLESS NOTED OTHERWISE.

J. REFER TO ARCHITECTURAL PLANS FOR DRAINAGE SYSTEM UTILIZING DOWNSPOUTS AND GUTTERS.

K. INVERT ELEVATIONS REFERENCED TO FINISH FLOOR ELEVATION AT 0'-0".

PLUMBING KEY NOTES

1	PLUMBING VENT THROUGH ROOF, REFER TO DETAIL 02/P-501.

DRAFT
NOT FOR CONSTRUCTION

AVCON
TRANSFORMING TODAY'S IDEAS INTO TOMORROW'S REALITY

ZEMP PEPPER, P.E.
FL LICENSE NO.:41147
FBPR CERTIFICATE OF AUTHORIZATION NO. 5057

NO.	DATE	REVISION	BY

PLUMBING ROOF PLAN

RELEASE FOR BID

AIRPORT TERMINAL AND HANGAR DEVELOPMENT

PREPARED FOR

DEFUNIAK SPRINGS MUNICIPAL AIRPORT

DESIGNED BY:	**J. CAGLE**
DRAWN BY:	**J. CAGLE**
CHECKED BY:	**Z. PEPPER**
APPROVED BY:	**Z. PEPPER**
PROJECT NO:	**2019.028.01**
DATE:	**November 1, 2021**

SHEET NUMBER

P-103

THIS DOCUMENT CONTAINS PRIVILEGED AND PROPRIETARY INFORMATION, ALL OF WHICH IS EXPRESSLY PROVIDED BY AVCON, INC., FOR USE BY THE INTENDED RECIPIENT, AND FOR A SPECIFIC PURPOSE. WITHOUT THE EXPRESS WRITTEN CONSENT OF AVCON, INC. ANY DISTRIBUTION, REPRODUCTION, OR OTHER USE OF THIS DOCUMENT, IN WHOLE OR IN PART, IS STRICTLY PROHIBITED.

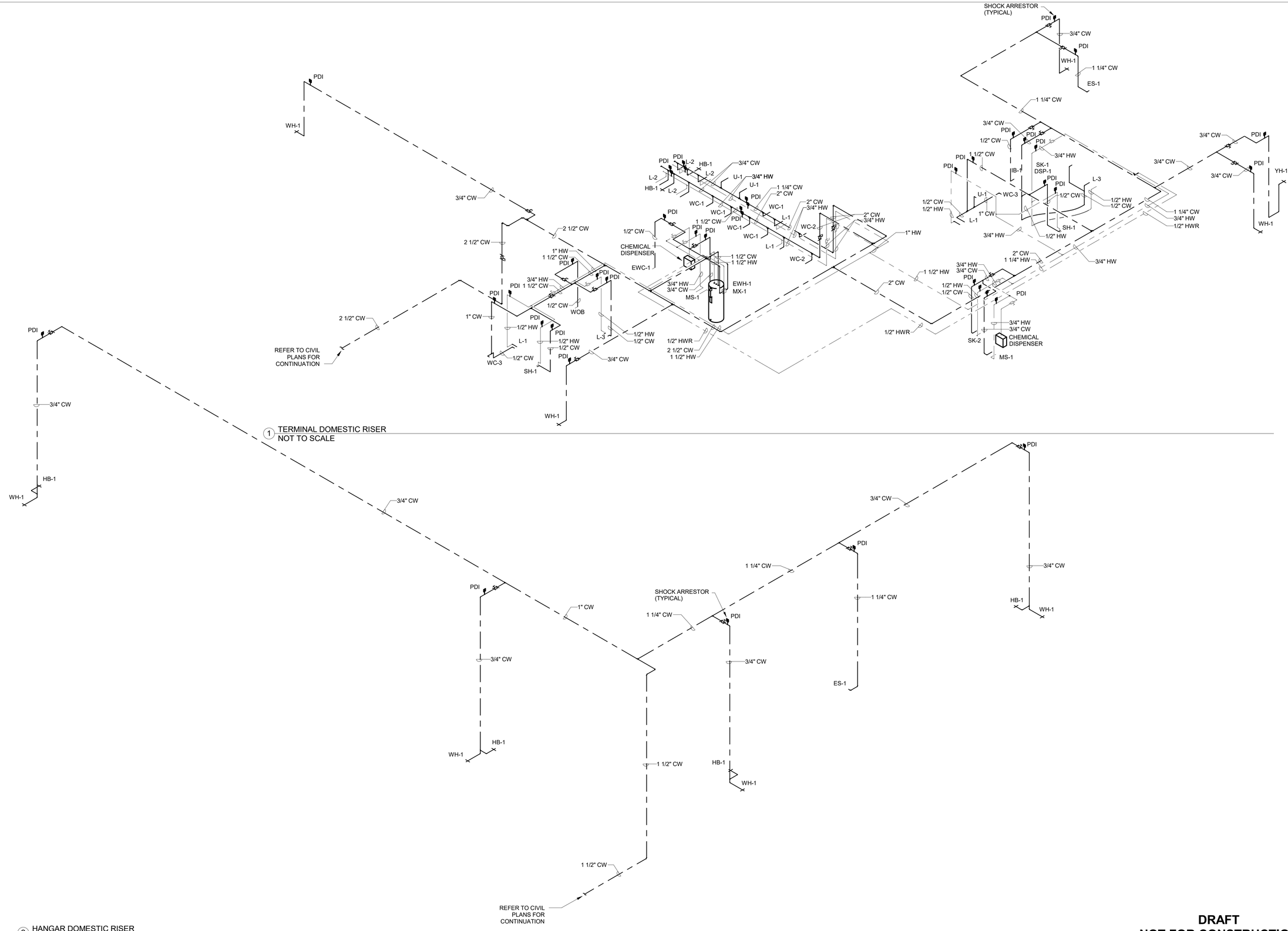

1 TERMINAL DOMESTIC RISER
NOT TO SCALE

2 HANGAR DOMESTIC RISER
NOT TO SCALE

DRAFT
NOT FOR CONSTRUCTION

AVCON
TRANSFORMING TODAY'S IDEAS INTO TOMORROW'S REALITY

ZEMP PEPPER, P.E.
FL LICENSE NO.:41147
FBPR CERTIFICATE OF AUTHORIZATION NO. 5057

NO.	DATE	REVISION	BY

PLUMBING RISER DIAGRAMS

RELEASE FOR BID

AIRPORT TERMINAL AND HANGAR DEVELOPMENT

PREPARED FOR

DEFUNIAK SPRINGS MUNICIPAL AIRPORT

DESIGNED BY:	**J.CAGLE**
DRAWN BY:	**J. CAGLE**
CHECKED BY:	**Z. PEPPER**
APPROVED BY:	**Z. PEPPER**
PROJECT NO:	**2019.028.01**
DATE:	**November 1, 2021**

SHEET NUMBER

P-301

THIS DOCUMENT CONTAINS PRIVILEGED AND PROPRIETARY INFORMATION, ALL OF WHICH IS EXPRESSLY PROVIDED BY AVCON, INC., FOR USE BY THE INTENDED RECIPIENT, AND FOR A SPECIFIC PURPOSE. WITHOUT THE EXPRESS WRITTEN CONSENT OF AVCON, INC. ANY DISTRIBUTION, REPRODUCTION, OR OTHER USE OF THIS DOCUMENT, IN WHOLE OR IN PART, IS STRICTLY PROHIBITED.

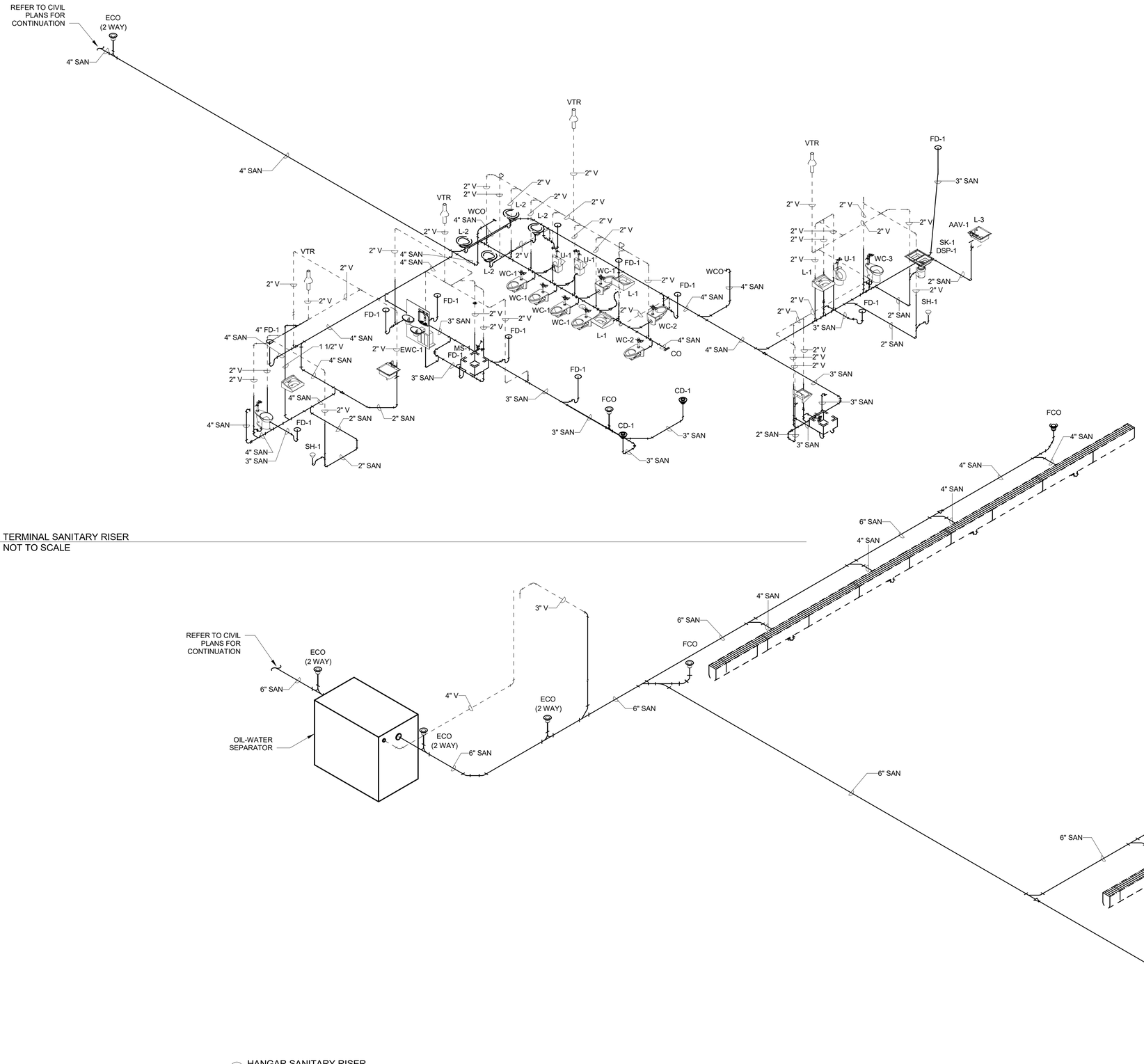

1 TERMINAL SANITARY RISER
NOT TO SCALE

2 HANGAR SANITARY RISER
NOT TO SCALE

DRAFT
NOT FOR CONSTRUCTION

AVCON
TRANSFORMING TODAY'S IDEAS INTO TOMORROW'S REALITY

ZEMP PEPPER, P.E.
FL LICENSE NO.:41147
FBPR CERTIFICATE OF AUTHORIZATION NO. 5057

NO.	DATE	REVISION	BY

PLUMBING RISER DIAGRAMS

RELEASE FOR BID

AIRPORT TERMINAL AND HANGAR DEVELOPMENT

PREPARED FOR

DEFUNIAK SPRINGS MUNICIPAL AIRPORT

DESIGNED BY:	**J. CAGLE**
DRAWN BY:	**J. CAGLE**
CHECKED BY:	**Z. PEPPER**
APPROVED BY:	**Z. PEPPER**
PROJECT NO:	**2019.028.01**
DATE:	**November 1, 2021**

SHEET NUMBER

P-302

THIS DOCUMENT CONTAINS PRIVILEGED AND PROPRIETARY INFORMATION, ALL OF WHICH IS EXPRESSLY PROVIDED BY AVCON, INC., FOR USE BY THE INTENDED RECIPIENT, AND FOR A SPECIFIC PURPOSE. WITHOUT THE EXPRESS WRITTEN CONSENT OF AVCON, INC. ANY DISTRIBUTION, REPRODUCTION, OR OTHER USE OF THIS DOCUMENT, IN WHOLE OR IN PART, IS STRICTLY PROHIBITED.

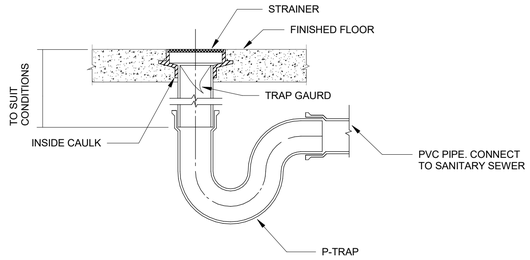

NOTE: PROVIDE ALL FLOOR DRAINS WITH TRAP GAURDS.

1 FLOOR DRAIN DETAIL
NOT TO SCALE

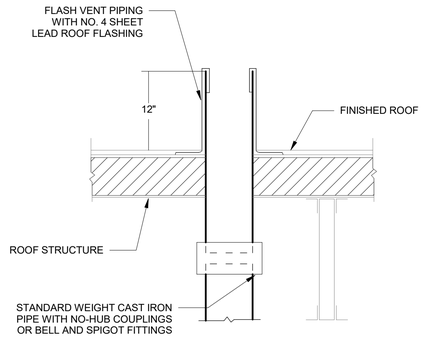

2 VTR DETAIL
NOT TO SCALE

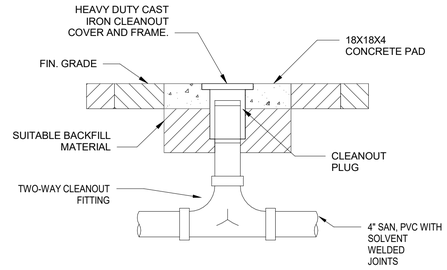

3 EXTERIOR CLEANOUT DETAIL
NOT TO SCALE

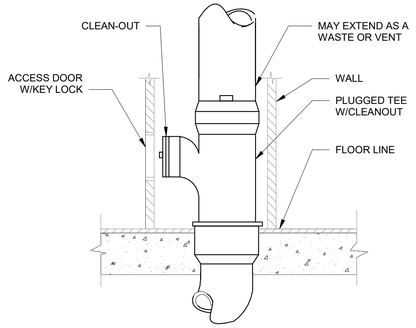

4 WALL CLEANOUT DETAIL
NOT TO SCALE

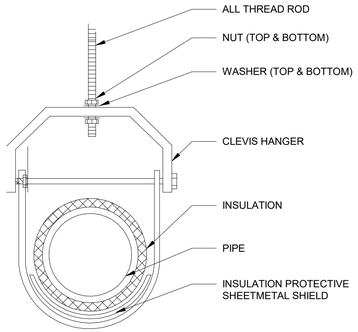

5 CLEVIS HANGER DETAIL
NOT TO SCALE

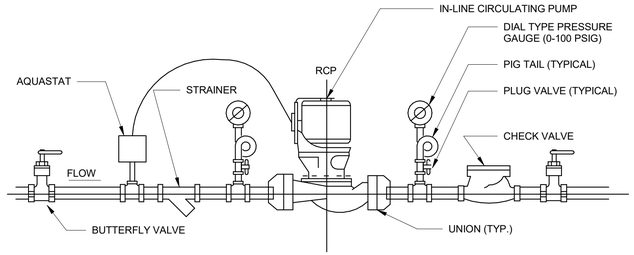

6 RCP DETAIL
NOT TO SCALE

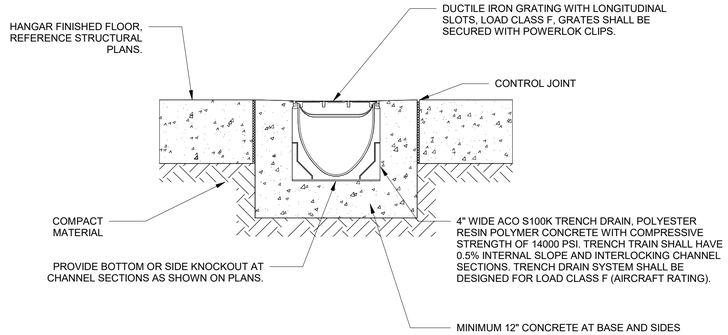

NOTE:
TRENCH DRAIN INSTALLATION SHALL BE INSTALLED IN ACCORDANCE WITH MANUFACTURER'S INSTALLATION INSTRUCTIONS.

7 TRENCH DRAIL DETAIL
NOT TO SCALE

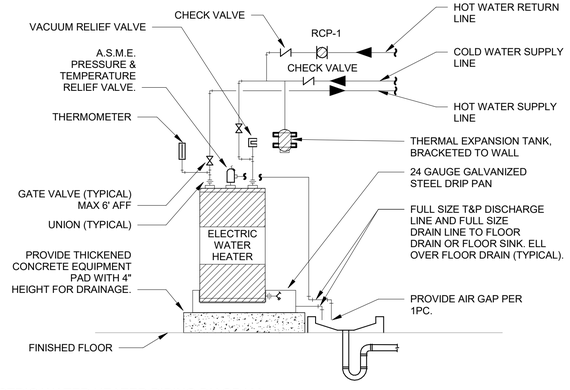

8 ELECTRIC WATER HEATER PIPING DIAGRAM
NOT TO SCALE

NOTE:
1. ALL PIPING SHALL BE SECURED TO MAKE RIGID.
2. ALL LINES TO BE FULL SIZE TO POINT OF CONNECTION AT HEATER.
3. REFER TO PLUMBING FLOOR PLAN 1/P-102 FOR MOP SINK AND ELECTRIC WATER HEATER CONFIGURATION.

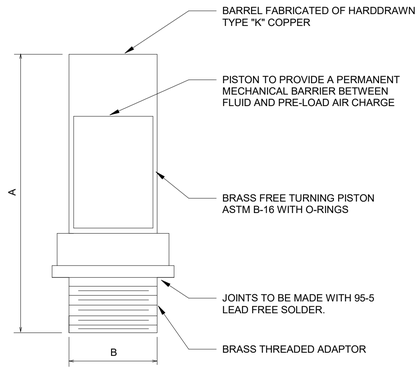

PPP SIZE	P.D.I. SYMBOL	FIXTURE UNIT RATINGS	A SIZE	B SIZE
1/2"	A	1 - 11	5"	1/2"
3/4"	B	12 - 32	5"	3/4"
1"	C	33 - 60	7"	1"
1-1/4"	D	61 - 113	7"	1-1/4"
1-1/2"	E	114 - 154	9"	1-1/2"
2"	F	155 - 330	9"	2"

NOTES:
1) SEE WATER RISER DIAGRAMS FOR LOCATIONS OF SHOCK ABSORBERS.
2) WATER HAMMER ARRESTOR SHALL BE BY MANUFACTURER APPROVING INSTALLATION REQUIRING ZERO ACCESS.

9 WATER SHOCK ARRESTOR DETAIL
NOT TO SCALE

DRAFT
NOT FOR CONSTRUCTION

AVCON
TRANSFORMING TODAY'S IDEAS INTO TOMORROW'S REALITY

ZEMP PEPPER, P.E.
FL LICENSE NO.:41147
FBPR CERTIFICATE OF AUTHORIZATION NO. 5057

NO.	DATE	REVISION	BY

PLUMBING DETAILS

RELEASE FOR BID

AIRPORT TERMINAL AND HANGAR DEVELOPMENT

PREPARED FOR
DEFUNIAK SPRINGS MUNICIPAL AIRPORT

DESIGNED BY: **J. CAGLE**
DRAWN BY: **J. CAGLE**
CHECKED BY: **Z. PEPPER**
APPROVED BY: **Z. PEPPER**
PROJECT NO: **2019.028.01**
DATE: **November 1, 2021**

SHEET NUMBER

P-501

THIS DOCUMENT CONTAINS PRIVILEGED AND PROPRIETARY INFORMATION, ALL OF WHICH IS EXPRESSLY PROVIDED BY AVCON, INC., FOR USE BY THE INTENDED RECIPIENT, AND FOR A SPECIFIC PURPOSE, WITHOUT THE EXPRESS WRITTEN CONSENT OF AVCON, INC. ANY DISTRIBUTION, REPRODUCTION, OR OTHER USE OF THIS DOCUMENT, IN WHOLE OR IN PART, IS STRICTLY PROHIBITED.

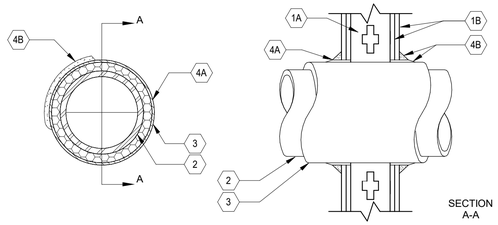

System No.W-L-5010
May 19, 2005
F Rating - 2 Hr.
T Rating - 1-1/2 Hr.
L Rating At Ambient - 2 CFM/sqft
L Rating At 400 F - less than 1 CFM/sqft

NOTE:
THIS MATERIAL WAS EXTRACTED BY 3M FIRE PROTECTION PRODUCTS FROM THE 2004 EDITION OF THE UL FIRE RESISTANCE DIRECTORY.

1. Wall Assembly - The 1 or 2 hr fire-rated gypsum wallboard/stud wall assembly shall be constructed of the materials and in the manner desribed in the individual U300, U400 or V400 Series Wall or Partition Design in the UL Fire Resistance Directory and shall include the following construction features:

A. Studs - Wall framing may consist of either wood studs or steel channel studs. Wood studs to consist of nom 2 in. by 4 in. (25 mm by 102 mm) lumber spaced 16 in. (406 mm) OC with nom 2 by 4 in. lumber end plates and cross braces. Steel studs to be min 3-5/8 in. (92 mm) wide by 1-3/8 in. (35 mm) deep channels spaced max 24 in. (610 mm) OC.

B. Gypsum Board* - Nom 5/8 in. (16 mm) thick, 4 ft (122 cm) wide with square or tapered edges. The gypsum wallboard type, thickness, number of layers, fastener type and sheet orientation shall be as specified in the individual U300 or U400 Series Design in the UL Fire Resistance Directory. Max diam of opening is 14-1/2 in (368 mm) for wood stud walls and 18 in. (457 mm) for steel stud walls.

The hourly F Rating of the firestop system is 1 hr when installed in a 1 hr fire rated wall and 2 hr when installed in a 2 hr fire rated wall.

2. Through Penetrants - One metallic pipe or tubing to be centered within the firestop system. Pipe or tubing to be rigidly supported on both sides of wall assembly. The following types and sizes of metallic pipes or tubing may be used:

A. Steel Pipe - Nom 12 in. (305 mm) diam (or smaller) Schedule 10 (or heavier) steel pipe.
B. Copper Tubing - Nom 6 in. (152 mm) diam (or smaller) Type L (or heavier) copper tubing.
C. Copper Pipe - Nom 6 in. (152 mm) diam (or smaller) Regular (or heavier) copper pipe.

3. Pipe Covering* - Nom 1 in. or 2 in. (25 mm or 51 mm) thick hollow cylindrical heavy density glass fiber units jacketed on the outside with an all service jacket. Longitudinal joints sealed with metal fasteners or factory-applied self-sealing lap tape. Transverse joints sealed with metal fasteners or with butt strip tape supplied with the product. When nom 1 in. (25 mm) thick pipe covering is used, the annular space between the pipe covering and the circular cutout in the gypsum wallboard layers on each side of the wall shall be min 1/4 in. to max 3/8 in. (6 mm to max 10 mm). When nom 2 in. (51 mm) thick pipe covering is used, the annular space between the pipe covering and the circular cutout in the gypsum wallboard layers on each side of the wall shall be min 1/2 in. to max 3/4 in. (13 mm to max 19 mm).

See Pipe and Equipment Covering - Materials (BRGU) category in Building Materials Directory for names of manufacturers. Any pipe covering material meeting the above specifications and bearing the UL Classification Marking with a Flame Spread Index of 25 or less and a Smoke Developed Index of 50 or less may be used.

The hourly T Rating of the firestop system is 3/4 hr when nom 1 in. (25 mm) thick pipe covering is used. The hourly T Rating of the firestop system is 1 hr and 1-1/2 hr when nom 2 in. (51 mm) thick pipe covering is used with 1 hr and 2 hr fire rated walls, respectively.

4. Firestop System - Installed symmetrically on both sides of wall assembly. The details of the firestop system shall be as follows:

A. Fill,Void or Cavity Materials* - Wrap Strip - Nom 1/4 in. (6 mm) thick intumescent elastomeric material faced on one side with aluminum foil, supplied in 2 in. (51 mm) wide strips. Nom 2 in. (51 mm) wide strip tightly wrapped around pipe covering (foil side out) with seam butted. Wrap strip layer securely bound with steel wire or aluminum foil tape and slid into annular space approx 1-1/4 in. (32 mm) such that approx 3/4 in. (19 mm) of the wrap strip width protrudes from the wall surface. One layer of wrap strip is required when nom 1 in. (25 mm) thick pipe covering is used. Two layers of wrap strip are required when nom 2 in. (51 mm) thick pipe covering is used.

3M COMPANY - FS-195+

B. Fill,Void or Cavity Materials* - Caulk or Sealant - Min 1/4 in. (6 mm) diam continuous bead applied to the wrap strip/wall interface and to the exposed edge of the wrap strip layer approx 3/4 in. (19 mm) from the wall surface.

3M COMPANY - CP 25WB+, IC 15WB+, FireDam 150+ caulk or FB-3000 WT sealant

*Bearing the UL Classification Marking

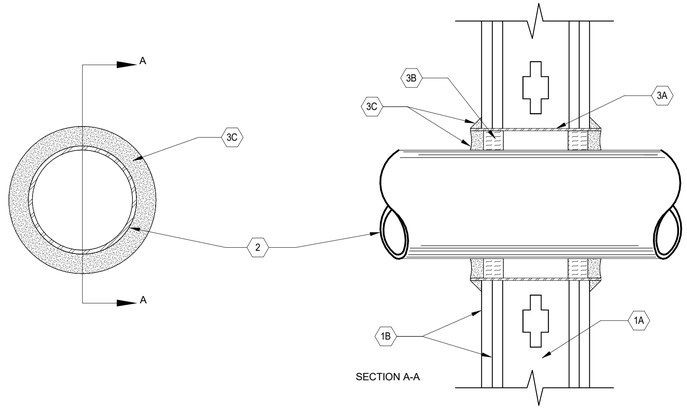

System No.W-L-1003
September 03, 2004
(Formerly System No. 147)
F Ratings - 1 and 2 Hr (See Item 1)
T Rating - 0 Hr

NOTE:
THIS MATERIAL WAS EXTRACTED BY 3M FIRE PROTECTION PRODUCTS FROM THE 2004 EDITION OF THE UL FIRE RESISTANCE DIRECTORY.

1. Wall Assembly - The 1 or 2 hr fire-rated gypsum wallboard/stud wall assembly shall be constructed of the materials and in the manner described in the individual U300 or U400 Series Wall or Partition Design in the UL Fire Resistance Directory and shall include the following construction features:

A. Studs - Wall framing may consist of either wood studs or steel channel studs. Wood studs to consist of nom 2 by 4 in. lumber spaced 16 in. OC with nom 2 by 4 in. lumber end plates and cross braces. Steel studs to be min 3-1/2 in. wide by 1-3/8 in. deep channels spaced max 24 in. OC.
B. Gypsum Board* - Nom 5/8 in. thick, 4 ft. wide with square or tapered edges. The gypsum wallboard type, thickness, number of layers, fastener type and sheet orientation shall be as specified in the individual U300 or U400 Series Design in the UL Fire Resistance Directory. Max diam of opening is 15 in.
The hourly F Rating of the firestop system is equal to the hourly fire rating of the wall assembly in which it is installed.

2. Through Penetrant - One metallic pipe, conduit or tubing to be installed either concentrically or eccentrically within the firestop system. The space between pipes, conduits or tubing and the steel sleeve (Item 3A) shall be min of 0 in. (point contact) to max 2-3/8 in. Pipe, conduit or tubing to be rigidly supported on both sides of wall assembly. The following types and sizes of metallic pipes, conduits or tubing may be used:

A. Steel Pipe - Nom 12 in. diam (or smaller) Schedule 10 (or heavier) steel pipe.
B. Iron Pipe - Nom 12 in. diam (or smaller) service weight (or heavier) cast iron soil pipe, nom 12 in. diam (or smaller) or Class 50 (or heavier) ductile iron pressure pipe.
C. Conduit - Nom 6 in. diam (or smaller) steel conduit or nom 4 in. diam (or smaller) steel electrical metallic tubing.
D. Copper Tubing - Nom 6 in. diam (or smaller) Type L (or heavier) copper tubing.
E. Copper Pipe - Nom 6 in. diam (or smaller) Regular (or heavier) copper pipe.

3. Firestop System - Installed symmetrically on both sides of wall assembly. The details of the firestop system shall be as follows.

A. Steel Sleeve - Cylindrical sleeve fabricated from min 0.019 in. thick (No. 28 gauge) galv sheet steel and having a min 2 in. lap along the longitudinal seam. Length of steel sleeve to be equal to thickness of wall plus 1 to 4 in. such that, when installed, the ends of the sleeve will project approximately 1/2 to 2 in. beyond the surface of the wall on both sides of the wall assembly. Sleeve installed by coiling the sheet steel to a diam smaller than the through opening, inserting the coil through the openings and releasing the coil to let it uncoil against the circular cutouts in the gypsum wallboard layers.
B. Packing Material - Min 1 in. thickness of mineral wool batt insulation firmly packed into steel sleeve on both sides of the wall assembly as permanent forms. Packing material to be recessed min 1/2 in. from end of steel sleeve (flush with or recessed into gypsum wallboard surface) on both sides of wall assembly.
B1. Packing Material - (Not shown) - As an alternate to Item B, nom 1 in. thick polyethylene backer rod may be used. The backer rod is to be recessed within the steel sleeve a min of 1 in. from each surface of wall.
C. Fill,Void or Cavity Materials* - Caulk or Sealant - When mineral wool batt insulation is used, applied to fill the steel sleeve to a min depth of 1/2 in. on both sides of wall assembly. When backer rod is used, a min thickness of 1 in. of CP-25WB+ caulk is required flush with surface of wall. A nom 1/4 in. diam continuous bead of caulk or sealant shall be applied around the circumference of the steel sleeve at its egress from the gypsum wallboard layers on both sides of the wall assembly.

3M COMPANY - CP 25WB+ caulk or FB-3000 WT sealant.

*Bearing the UL Classification Marking

1 FIRESTOP SYSTEM - GYPSUM BOARD WALL INSULATED METAL PIPE
NOT TO SCALE

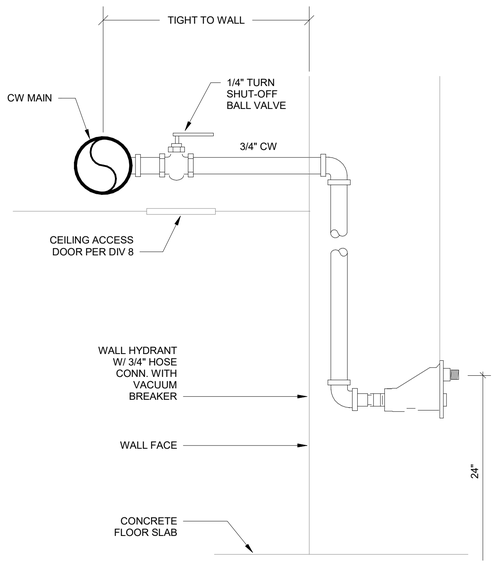

3 WALL HYDRANT DETAIL
NOT TO SCALE

2 FIRESTOP SYSTEM - GYPSUM BOARD WALL UN-INSULATED METAL PIPE
NOT TO SCALE

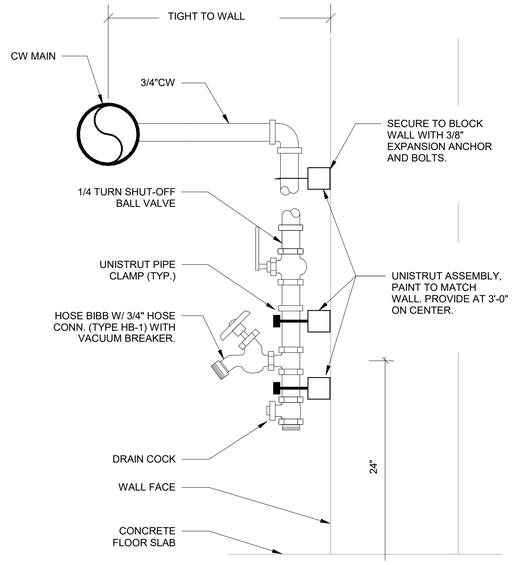

4 EXPOSED HOSE BIBB DETAIL
NOT TO SCALE

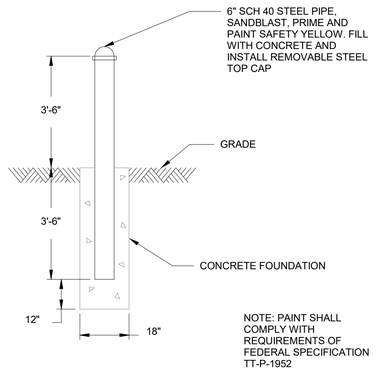

5 BOLLARD DETAIL
NOT TO SCALE

DRAFT
NOT FOR CONSTRUCTION

AVCON
TRANSFORMING TODAY'S IDEAS INTO TOMORROW'S REALITY

ZEMP PEPPER, P.E.
FL LICENSE NO.:41147
FBPR CERTIFICATE OF AUTHORIZATION NO. 5057

NO.	DATE	REVISION	BY

PLUMBING DETAILS

RELEASE FOR BID

AIRPORT TERMINAL AND HANGAR DEVELOPMENT

PREPARED FOR
DEFUNIAK SPRINGS MUNICIPAL AIRPORT

DESIGNED BY:	**J. CAGLE**
DRAWN BY:	**J. CAGLE**
CHECKED BY:	**Z. PEPPER**
APPROVED BY:	**Z. PEPPER**
PROJECT NO:	**2019.028.01**
DATE:	**November 1, 2021**

SHEET NUMBER

P-502

THIS DOCUMENT CONTAINS PRIVILEGED AND PROPRIETARY INFORMATION, ALL OF WHICH IS EXPRESSLY PROVIDED BY AVCON, INC., FOR USE BY THE INTENDED RECIPIENT, AND FOR A SPECIFIC PURPOSE, WITHOUT THE EXPRESS WRITTEN CONSENT OF AVCON, INC. ANY DISTRIBUTION, REPRODUCTION, OR OTHER USE OF THIS DOCUMENT, IN WHOLE OR IN PART, IS STRICTLY PROHIBITED.

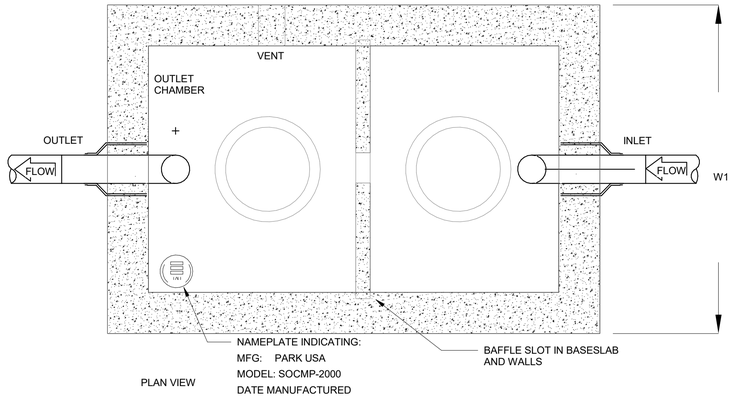

SAND-OIL INTERCEPTOR SCHEDULE									
MODEL NO.	CAPACITY USGal	OIL CAP. US (GAL)	FLOW RATE (GPM)	EMPTY WT (LBS)	LENGTH L1	WIDTH W1	HEIGHT H1	INLET FL1	OUTLET FL2
SOCMP-2000	2000	1000	50	21250	9'-2"	5'-8"	8'-0"	6'-11"	6'-8"

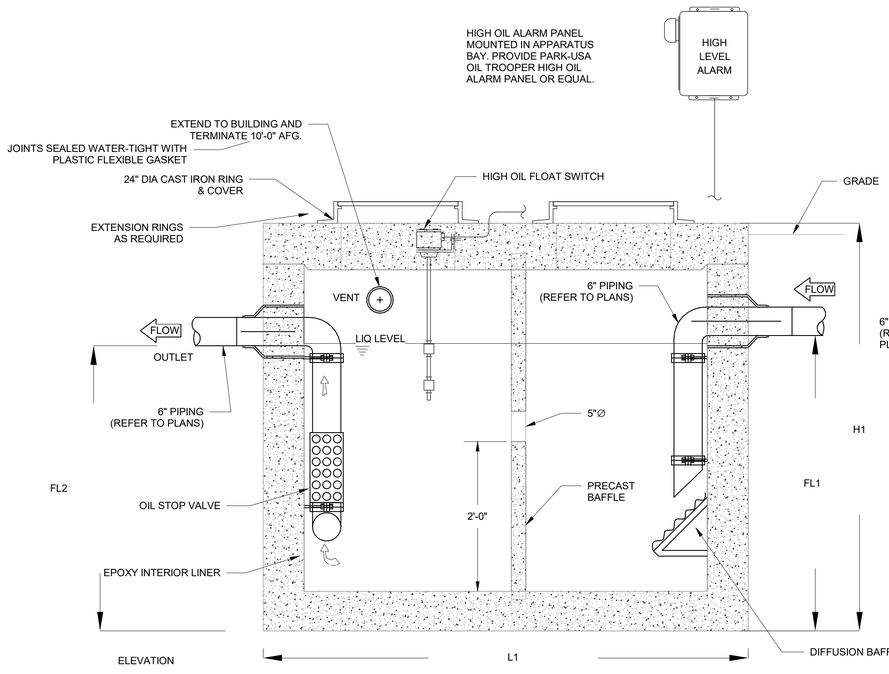

Specifications

CONCRETE : Class II concrete with of design strength of 4000 PSI at 28 days. Unit is of monolithic construction at floor and first stage of wall with sectional riser to required depth. Rated for H-20 Loading.

REINFORCEMENT: Grade 60 reinforced. Steel rebar to conform to ASTM A615 on required centers or equal. Bar bending and placement shall conform the latest ACI standards.

C.I. CASTINGS: Cast iron rings and grates are manufactured of grey cast iron conforming to ASTM A48-76 Class 30.

Engineering Data

Interceptor is structurally and hydraulically engineered conforming to Uniform Plumbing Code. Nominal total liquid capcity and oil holding capacity as indicated. Recommended for flow rates of 5 to 37 GPM (consult Old Castle Precast for proper sizing). Manufacturer shall submit performance calculations for oil & water seperation certified by a licensed professional engineer. Field excavation and preparation shall be completed prior to delivery of interceptor.

Use dimensional data as shown.

Contractor to verify size and location of all openings and verify field conditions.

Oil/water interceptor shall have state approval (FAC) 64c-6.013 Florida Administration Code, FBC section 1003.4 thru 1003.4.2.2 and Florida Administration Code.

The contractor shall install cast-in place ladder rungs for the inside structure face of the oil water separators (if required due to depth) in accordance with OSHA requirements.

1 OIL WATER INTERCEPTOR DETAIL
NOT TO SCALE

DRAFT
NOT FOR CONSTRUCTION

AVCON
TRANSFORMING TODAY'S IDEAS INTO TOMORROW'S REALITY

ZEMP PEPPER, P.E.
FL LICENSE NO.:41147
FBPR CERTIFICATE OF AUTHORIZATION NO. 5057

NO.	DATE	REVISION	BY

PLUMBING DETAILS

RELEASE FOR BID

AIRPORT TERMINAL AND HANGAR DEVELOPMENT

PREPARED FOR
DEFUNIAK SPRINGS MUNICIPAL AIRPORT

DESIGNED BY: **J. CAGLE**
DRAWN BY: **J. CAGLE**
CHECKED BY: **Z. PEPPER**
APPROVED BY: **Z. PEPPER**
PROJECT NO: **2019.028.01**
DATE: **November 1, 2021**

SHEET NUMBER

P-503

THIS DOCUMENT CONTAINS PRIVILEGED AND PROPRIETARY INFORMATION, ALL OF WHICH IS EXPRESSLY PROVIDED BY AVCON, INC., FOR USE BY THE INTENDED RECIPIENT, AND FOR A SPECIFIC PURPOSE. WITHOUT THE EXPRESS WRITTEN CONSENT OF AVCON, INC. ANY DISTRIBUTION, REPRODUCTION, OR OTHER USE OF THIS DOCUMENT, IN WHOLE OR IN PART, IS STRICTLY PROHIBITED.

FIRE PROTECTION LEGEND

F	FIRE LINE
	FIRE DEPARTMENT CONNECTION
	CHECK VALVE
	FIRE DEPARTMENT VALVE
	FIRE RISER (CONTROL VALVE ASSEMBLY)
	PIV
	FIRE RISER (CONTROL VALVE ASSEMBLY)
	PIPE UP
	PIPE DOWN

FIRE PROTECTION SHEET INDEX

F-001	FIRE PROTECTION LEGEND
F-101	OVERALL FIRE PROTECTION FLOOR PLAN
F-102	FIRE PROTECTION 1ST FLOOR PLAN - AREA A
F-501	FIRE PROTECTION DETAILS
F-502	FIRE PROTECTION DETAILS

FAC 61G15-32.003 NOTES

32.003(1) THE FIRE SPRINKLER CONTRACTOR SHALL PREPARE DETAILED WORKING PLANS IN ACCORDANCE WITH NFPA 13, 2010 EDITION. THE FIRE PROTECTION SYSTEM LAYOUT SHALL FOLLOW THE DESIGN GUIDELINES SET FORTH IN THESE FIRE PROTECTION ENGINEERING DOCUMENTS.

32.003(2) THE FIRE SPRINKLER CONTRACTOR SHALL OBTAIN THE ACCEPTANCE TESTS FROM THE LOCAL AUTHORITY. THE ACCEPTANCE TEST FOR THE SPRINKLER SYSTEM PIPING SHALL BE IN ACCORDANCE WITH NFPA 13, CHAPTER 16 AND NFPA 25.

HYDRANT FLOW DATA

FLOW TEST PERFORMED ON MAY 14, 2021.

STATIC PRESSURE (PSI)	52 PSI
RESIDUAL PRESSURE (PSI)	26 PSI
WATER FLOW MEASURED (GPM)	675 GPM

FAC 61G15-32.004 NOTES

32.004(2)(a) THE POINT OF SERVICE IS INDICATED AT POST INDICATOR VALVE. AT THIS POINT, THE SYSTEM IS DEDICATED SOLELY FOR FIRE PROTECTION PURPOSES. NO DOMESTIC WATER SHALL BE TAKEN FROM THE SYSTEM BEYOND THIS POINT FOR OTHER PURPOSES.

32.004(2)(b) THE FOLLOWING ARE APPLICABLE STANDARDS:
2020 FLORIDA FIRE PREVENTION CODE
NFPA 13, 2013 EDITION, INSTALLATION OF SPRINKLER SYSTEMS.
NFPA 24, 2010 EDITION, STANDARD FOR THE INSTALLATION OF PRIVATE FIRE SERVICE MAINS AND THEIR APPURTENANCES.
NFPA 25, 2010 EDITION, INSPECTION, TESTING AND MAINTENANCE OF WATER-BASED FIRE PROTECTION SYSTEMS.

32.004(2)(c) CLASSIFICATIONS OF HAZARD OCCUPANCIES FOR THE AREAS OF DESIGN SHALL BE AS INDICATED ON THE DRAWINGS.

32.004(2)(d) THE SPRINKLER SYSTEM SHALL BE WET PIPE FOR OFFICES, CORRIDORS AND SUPPORT SPACES FOR A LIGHT HAZARD OCCUPANCY AND SHALL BE HYDRAULICALLY CALCULATED PER NFPA 13, 2013 EDITION, 0.10gpm/sq.ft. OVER THE MOST REMOTE 1500sq.ft. SPRINKLERS SHALL HAVE A TEMPERATURE RATING OF 155°F AND THE SPACING SHALL BE 225sq.ft. INCLUDE A FIRE HOSE ALLOWANCE OF 100gpm.
THE SPRINKLER SYSTEM SHALL BE WET PIPE FOR THE MECHANICAL ROOMS, KITCHEN, SCIENCE PASSENGER SPACES, ELECTRICAL ROOMS AND STORAGE FOR AN ORDINARY HAZARD GROUP 1 OCCUPANCY AND SHALL BE HYDRAULICALLY CALCULATED PER NFPA 13, 2013 EDITION, 0.15gpm/sq.ft. OVER THE MOST REMOTE 1500sq.ft. SPRINKLERS SHALL HAVE A TEMPERATURE RATING OF 155°F AND THE SPACING SHALL BE 130sq.ft. INCLUDE A FIRE HOSE ALLOWANCE OF 250gpm.

32.004(2)(e). WATER SUPPLY: THESE BUILDINGS WILL EACH HAVE A NEW 6" WATER SUPPLY FOR FIRE SPRINKLER PROTECTION, WHICH CONNECTS TO A WATER MAIN AS SHOWN ON THE CIVIL PLANS.

32.004(2)(f) WATER SUPPLY INFORMATION SHALL BE OBTAINED FROM THE LOCAL UTILITY BASED ON THE PROVIDED FIRE FLOW CONDITIONS.

32.004(2)(g) VALVE AND ALARM REQUIREMENTS: ALL CONTROL VALVES ON SPRINKLER RISERS AND FIRE PROTECTION BACKFLOW PREVENTERS SHALL HAVE A TAMPER SWITCH. THE FLOW SWITCH SHALL BE SET TO NOT ALARM WITH MINOR CITY WATER PRESSURE FLUCTUATIONS. HOWEVER, THE FLOW OF ONE SPRINKLER HEAD SHALL PRODUCE AN ALARM CONDITION BY TRIPPING THE FLOW SWITCH. ALL FLOW AND TAMPER SWITCHES SHALL BE CONNECTED TO THE BUILDING FIRE ALARM PANEL. FLOW SWITCHES SHALL ALSO SOUND THE ELECTRIC ALARM BELL ON THE OUTSIDE WALL. FIRE SPRINKLER CONTRACTOR SHALL VERIFY AND TEST PER NFPA 13.

32.004(2)(h) THE LOCAL WATER PURVEYOR IS REQUESTED TO ADVISE THE ENGINEER OF RECORD IF CONDITIONS EXIST IN THEIR WATER SUPPLY THAT COULD LEAD TO MIC, SO THAT THE ENGINEER CAN DESIGN CORRECTIVE MEASURES. THERE ARE NO KNOWN MIC CONDITIONS IN THE WALTON COUNTY WATER SYSTEMS.

32.004(2)(i) BACKFLOW PREVENTER AND METERING SPECIFICATIONS SHALL MEET OR EXCEED REQUIREMENTS OF THE LOCAL UTILITY AND AHJ.

32.004(2)(j) YARD AND INTERIOR FIRE PROTECTION COMPONENTS: PRODUCT DATA SHEETS SHALL BE SUBMITTED BY THE SPRINKLER CONTRACTOR ALONG WITH THEIR SHOP DRAWINGS. ALL FIRE PROTECTION DEVICES AND COMPONENTS SHALL BE UL LISTED AND FM APPROVED.

FIRE PROTECTION GENERAL NOTES

1. WET PIPE SPRINKLER SYSTEM DESIGNED PER NFPA 13, 2013 EDITION. LIGHT HAZARD OCCUPANCY (OFFICES, CORRIDORS AND SUPPORT SPACES) USING 0.10gpm/sq.ft. OVER THE MOST REMOTE 1500 sq.ft., 225 sq.ft. MAXIMUM HEAD SPACING & 100gpm HOSE STREAM TO MEET OR EXCEED THE REQUIREMENTS OF NFPA 13, 2013 EDITION AND LOCAL AUTHORITIES. ORDINARY HAZARD GROUP 1 OCCUPANCY (MECHANICAL ROOMS, PASSENGER AREAS, ELECTRICAL ROOMS AND STORAGE) USING 0.15gpm/sf.ft. OVER THE MOST REMOTE 1500 sq.ft., 130 sq.ft. MAXIMUM HEAD SPACING AND 250gpm HOSE STREAM TO MEET OR EXCEED THE REQUIREMENTS OF NFPA 13, 2013 EDITION AND LOCAL AUTHORITIES.
2. ALL FIRE SPRINKLERS SHALL BE IN ACCORDANCE WITH NFPA 13, 2013 EDITION.
3. ALL WORK SHALL BE DONE IN ACCORDANCE WITH NFPA 13, 2013 EDITION.
4. ALL HANGERS & MATERIALS TO BE IN ACCORDANCE WITH NFPA 13, 2013 EDITION.
5. FIRE PROTECTION PIPING 2 1/2" AND LARGER TO BE SCHEDULE 10 BLACK PIPE, U.N.O. FIRE PROTECTION PIPING 2" AND SMALLER TO BE SCHEDULE 40 BLACK PIPE, U.N.O.
6. PIPE TO HANG AT 12"~ ABOVE FINISHED CEILING. COORDINATE WITH ALL STRUCTURAL ELEMENTS AND ABIDE BY ALL OBSTRUCTION RULES PER NFPA 13, 2013 EDITION AND FIRE SPRINKLER MANUFACTURER'S SPECIFICATIONS.
7. UPRIGHT SPRINKLERS TO BE LOCATED BETWEEN 1" AND 12" BELOW ROOF DECK.
8. SPRINKLER HEAD SPACING IS PER NFPA 13, 2013 EDITION.
9. THE CONTRACTOR SHALL PROVIDE, OR HAVE PROVIDED, A SET OF COORDINATION DRAWINGS FOR ALL SYSTEMS AND FEATURES THAT OCCUR ABOVE THE CEILING PLANE. THE COORDINATION DRAWINGS SHALL INCLUDE, BUT NOT BE LIMITED TO, STRUCTURAL MEMBERS, HVAC DUCTWORK, HYDRONIC PIPING, PLUMBING SUPPLY AND WASTE PIPING, FIRE PROTECTION PIPING, ELECTRICAL POWER CONDUITS AND RACEWAYS, AND ELECTRICAL LOW VOLTAGE CONDUITS AND ACEWAYS. THE COORDINATION DRAWINGS SHALL PROVIDE, APPORTION, AND COORDINATE SPACE FOR ALL SYSTEMS, HORIZONTALLY AND VERTICALLY ABOVE THE CEILING PLANE TO THE STRUCTURAL DECK ABOVE ALLOWING EACH TRADE CONTRACTOR THE SPACE TO PROPERLY EXECUTE HIS PORTION OF THE WORK.
10. ALL PENETRATIONS THRU RATED WALLS SHALL BE FIRESTOPPED UNDER DIVISION 07 SPECIFICATION SECTION "FIRESTOPPING".
11. ALL DIMENSIONS TO BE VERIFIED DURING FIELD CHECK OF SPRINKLER SYSTEM.
12. SPRINKLER SYSTEMS, INCLUDING ALL ASSOCIATED FIRE PROTECTION SIGNALS, SHALL BE SUPERVISED BY AN APPROVED CENTRAL, PROPRIETARY, AUXILIARY, OR REMOTE STATION SYSTEM IN ACCORDANCE WITH NFPA.
13. FIRE PROTECTION SHOP DRAWINGS, HYDRAULIC CALCULATIONS, AND MATERIAL DATA SUBMITTALS ARE TO BE SUBMITTED TO ENGINEER OF RECORD FOR REVIEW AND APPROVAL.
14. CORROSION PROTECTION FOR ALL UNDERGROUND BOLTED JOINT ACCESSORIES SHALL BE CLEANED AND THOROUGHLY COATED WITH ASPHALT OR OTHER CORROSION-RETARDING MATERIAL AFTER INSTALLATION IN ACCORDANCE WITH NFPA 13, 2013 EDITION.
15. THE UNDERGROUND MAIN STARTING AT THE PUBLIC WATER UTILITY POINT OF CONNECTION HAS BEEN DESIGNED TO NFPA 24, 2013 EDITION. INSTALLATION AND TESTING MUST BE IN ACCORDANCE WITH NFPA 24, 2013 EDITION.
16. ALL FIRE SPRINKLER COMPONENTS ARE TO BE RATED FOR THE MAXIMUM SYSTEM WORKING PRESSURE TO WHICH THEY ARE EXPOSED IN ACCORDANCE WITH NFPA 13, 2013 EDITION.
17. THE COMPONENTS OF THE FIRE PROTECTION SYSTEM(S) FURNISHED UNDER THIS DIVISION OF THE SPECIFICATIONS SHALL BE GUARANTEED FOR A PERIOD OF ONE (1) YEAR FROM THE DATE OF ACCEPTANCE THEREOF, EITHER FOR BENEFICIAL USE OR FINAL ACCEPTANCE, WHICHEVER IS EARLIER, AGAINST DEFECTIVE MATERIALS, DESIGN, AND WORKMANSHIP. UPON RECEIPT OF NOTICE FROM THE ARCHITECT OF FAILURE OF ANY PART OF THE EQUIPMENT DURING THE GUARANTEE PERIOD, THE AFFECTED PART OR PARTS SHALL BE REPLACED PROMPTLY WHICH INCLUDES REMOVING THE DEFECTIVE PART OR PARTS, REPLACING AND INSTALLING THE NEW PART OR PARTS AND AT THE EXPENSE OF THE CONTRACTOR.
18. OPERATING AND MAINTENANCE INSTRUCTIONS, PRINTED AND BOUND IN HARD COVER THREE-RING LOOSE LEAF NOTEBOOKS, SHALL BE PROVIDED TO THE OWNER.
19. CONTRACTOR SHALL PROVIDE FIRE SUPPRESSION SYSTEM IN CONFORMANCE WITH THE FOLLOWING CODES AND STANDARDS:
NFPA 13, 2013 EDITION
NFPA 24, 2010 EDITION
NFPA 25, 2010 EDITION
FLORIDA BUILDING CODE, 2020
FLORIDA FIRE PREVENTION CODE, 2020
FLORIDA ADMINISTRATIVE CODE 61G15-32.003 AND 61514-32.004
WALTON COUNTY DESIGN CRITERIA FOR FIRE PROTECTION SYSTEMS
20. ALL SYSTEM MAIN DRAINS SHALL DISCHARGE AS SHOWN ON THE PLANS. FIRE PROTECTION CONTRACTOR SHALL COORDINATE LOCATION WITH THE PLUMBING CONTRACTOR.
21. PIPE ROUTING SHOWN IS SCHEMATIC ONLY. IT IS THE RESPONSIBILITY OF THIS CONTRACTOR TO PROVIDE ANY ADDITIONAL OFFSETS REQUIRED FOR PROPER INSTALLATION AND COORDINATION WITH OTHER TRADES.
22. PIPING IN AREAS WITH EXPOSED STRUCTURE SHALL BE INSTALLED AS HIGH AS POSSIBLE TO ALLOW THE OWNER MAXIMUM USE OF THE SPACE.
23. PROVIDE ACCESS PANELS TO ALL VALVES ABOVE NON-ACCESSIBLE CEILINGS AND CHASES.
24. PROVIDE SPRINKLERS UNDER ALL EXPOSED DUCTWORK OVER 48" WIDE AND SPACE HEADS AROUND ALL OBSTRUCTIONS IN ACCORDANCE WITH NFPA 13. HEADS UNDER DUCTS ARE NOT INDICATED ON THE DRAWINGS BUT ARE REQUIRED AND SHALL BE PROVIDED IN ACCORDANCE WITH NFPA 13. SPRINKLER LOCATIONS UNDER DUCTWORK AND AROUND OBSTRUCTIONS SHALL BE GOVERNED BY FINAL INSTALLED LOCATIONS.
25. COORDINATE PIPING WITH ALL ELECTRICAL EQUIPMENT (PANELS, TRANSFORMERS, ETC.) PRIOR TO ANY INSTALLATION. DO NOT ROUTE ANY PIPING OVER ANY ELECTRICAL PANELS UNDER ANY CIRCUMSTANCES. ANY PIPING RUN OVER ELECTRICAL SHALL BE REROUTED AT NO ADDITIONAL COST.
26. SPRINKLER HEADS IN ELECTRICAL AND EQUIPMENT ROOMS ARE TO BE 286°F HEADS.
27. DEPTH OF COVER FOR UNDERGROUND PIPING SHALL BE NOT LESS THAN 30 INCHES.

DRAFT
NOT FOR CONSTRUCTION

AVCON
TRANSFORMING TODAY'S IDEAS INTO TOMORROW'S REALITY

ZEMP PEPPER, P.E.
FL LICENSE NO.:41147
FBPR CERTIFICATE OF AUTHORIZATION NO. 5057

NO.	DATE	REVISION	BY

FIRE PROTECTION LEGEND

RELEASE FOR BID

AIRPORT TERMINAL AND HANGAR DEVELOPMENT

PREPARED FOR
DEFUNIAK SPRINGS MUNICIPAL AIRPORT

DESIGNED BY:	J. CAGLE
DRAWN BY:	J. CAGLE
CHECKED BY:	Z. PEPPER
APPROVED BY:	Z. PEPPER
PROJECT NO:	2019.028.01
DATE:	November 1, 2021

SHEET NUMBER
F-001

THIS DOCUMENT CONTAINS PRIVILEGED AND PROPRIETARY INFORMATION, ALL OF WHICH IS EXPRESSLY PROVIDED BY AVCON, INC., FOR USE BY THE INTENDED RECIPIENT, AND FOR A SPECIFIC PURPOSE. WITHOUT THE EXPRESS WRITTEN CONSENT OF AVCON, INC., ANY DISTRIBUTION, REPRODUCTION, OR OTHER USE OF THIS DOCUMENT, IN WHOLE OR IN PART, IS STRICTLY PROHIBITED.



1 OVERALL FIRE PROTECTION REFLECTED CEILING PLAN
3/32" = 1'-0"

DRAFT
NOT FOR CONSTRUCTION

AVCON
TRANSFORMING TODAY'S IDEAS INTO TOMORROW'S REALITY

ZEMP PEPPER, P.E.
FL LICENSE NO.:41147
FBPR CERTIFICATE OF AUTHORIZATION NO. 5057

NO.	DATE	REVISION	BY

OVERALL FIRE PROTECTION FLOOR PLAN

RELEASE FOR BID

AIRPORT TERMINAL AND HANGAR DEVELOPMENT

PREPARED FOR

DEFUNIAK SPRINGS MUNICIPAL AIRPORT

DESIGNED BY:	J. CAGLE
DRAWN BY:	J. CAGLE
CHECKED BY:	Z. PEPPER
APPROVED BY:	Z. PEPPER
PROJECT NO:	2019.028.01
DATE:	November 1, 2021

SHEET NUMBER

F-101

THIS DOCUMENT CONTAINS PRIVILEGED AND PROPRIETARY INFORMATION, ALL OF WHICH IS EXPRESSLY PROVIDED BY AVCON, INC., FOR USE BY THE INTENDED RECIPIENT, AND FOR A SPECIFIC PURPOSE. WITHOUT THE EXPRESS WRITTEN CONSENT OF AVCON, INC., ANY DISTRIBUTION, REPRODUCTION, OR OTHER USE OF THIS DOCUMENT, IN WHOLE OR IN PART, IS STRICTLY PROHIBITED.

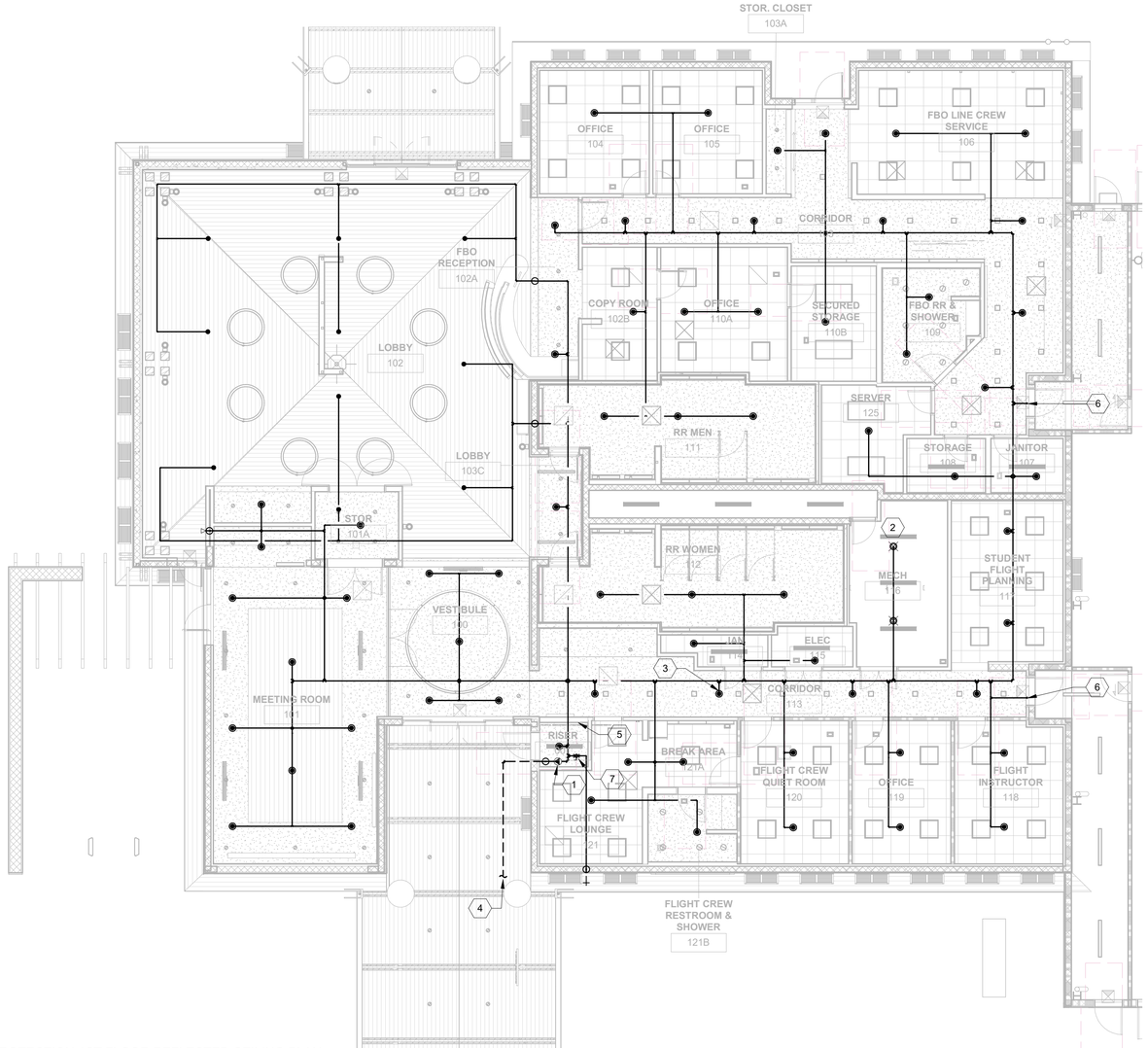

1 FIRE PROTECTION 1ST FLOOR REFLECTED CEILING PLAN - AREA A
1/8" = 1'-0"

FIRE PROTECTION GENERAL NOTES

A. PROVIDE NEW UPRIGHT SPRINKLERS FOR ALL EQUIPMENT ROOMS AND SIMILAR SPACES WITHOUT CEILINGS. PROVIDE NEW CONCEALED SPRINKLER HEADS (QUICK RESPONSE) IN AREAS WITH CEILINGS. OFFICE AREA, MEETING ROOM, CIRCULATION AREAS, AND SIMILAR SHALL BE LIGHT HAZARD IN ACCORDANCE WITH NFPA 13, QR SPRINKLERS. STORAGE AND EQUIPMENT ROOMS SHALL BE ORDINARY HAZARD IN ACCORDANCE WITH NFPA 13, QR SPRINKLERS. CONTRACTOR SHALL SUBMIT COMPLETE FIRE PROTECTION SPRINKLER PLANS IN ACCORDANCE WITH 61G15-32 TO AHJ AND ENGINEER AT TIME OF CONSTRUCTION.

B. ORDINARY HAZARD AND LIGHT HAZARD SPRINKLERS FOR SPACES WITH CEILINGS SHALL HAVE 5.6 K-FACTOR AND TEMPERATURE RATING OF 165 DEGREES AND SHALL BE SIMILAR TO VIKING MODEL VK462 (CONCEALED HEAD SPRINKLER). ORDINARY HAZARD AND LIGHT HAZARD SPRINKLERS FOR SPACES WITHOUT CEILINGS SHALL HAVE 5.6 K-FACTOR AND TEMPERATURE RATING OF 165° AND SHALL BE SIMILAR TO VIKING MODEL VK300 UPRIGHT SPRINKLER (QUICK RESPONSE). NOTE THAT EXTENDED COVERAGE CONCEALED HEAD SPRINKLERS WITH K-FACTOR OF 8.0 MAY BE USED TO REDUCE SYSTEM PRESSURE DROP WHERE SPRINKLERS HAVE APPROPRIATE LISTING FOR HAZARD.

C. COORDINATE ROUTING OF SPRINKLER PIPING WITH OTHER TRADES. ALL SPRINKLER PIPING SHALL BE ROUTED AS HIGH AS POSSIBLE.

D. CONTRACTOR SHALL FIELD VERIFY EXISTING CONDITIONS.

E. PIPING MATERIAL SHALL BE SCHEDULE 10 BLACK STEEL FOR PIPE SIZES >2-1/2" AND SCHEDULE 40 FOR PIPE SIZES <2-1/2". ALL COMPONENTS AND FIRE PROTECTION DEVICES SHALL BE U.L. LISTED FOR 175 PSI WORKING PRESSURE. ALL EXPOSED SPRINKLER PIPING SHALL BE PAINTED WITH METAL PRIMER AND FINISH COAT PER DIVISION 09. NOTE SPRINKLERS MUST BE PROTECTED FROM FIELD PAINTING.

F. NEW SPRINKLER(S) AND PIPING WORK SHALL BE HYDROSTATICALLY TESTED TO PRESSURE OF 200 PSI FOR 2 HOURS PERIOD. SYSTEM SHALL MAINTAIN TEST PRESSURE WITHOUT DROP IN GAUGE PRESSURE OR VISUAL LEAKAGE.

G. THE CONTRACTOR SHALL PERFORM ALL REQUIRED ACCEPTANCE TESTS, COMPLETE THE CONTRACTOR'S MATERIAL AND TEST CERTIFICATE(S), AND FORWARD THE CERTIFICATES TO THE AUTHORITY HAVING JURISDICTION PRIOR TO ASKING FOR APPROVAL OF THE INSTALLATION.

H. SPRINKLER SPACING SHALL BE PER SPRINKLER MANUFACTURER'S LISTING FOR SPECIFIC HAZARD OCCUPANCY. HYDRAULIC DESIGN DENSITY SHALL BE 0.15 GPM/S.F. FOR STORAGE AREAS AND EQUIPMENT ROOMS (ORDINARY HAZARD GROUP 1) OVER THE MOST REMOTE 1500 S.F. AND 0.10 GPM/S.F. FOR LIGHT HAZARD OCCUPANCY OVER MOST REMOTE 1500 S.F.

I. ALL FIRE PROTECTION COMPONENTS SHALL BE U.L. LISTED.

J. ALL FIRE SPRINKLERS SHALL BE QUICK RESPONSE TYPE.

K. AUXILIARY DRAINS SHALL BE PROVIDED FOR ANY TRAPPED SECTION OF SPRINKLER PIPING.

FIRE PROTECTION KEY NOTES

1	NEW WET TYPE SPRINKLER RISER. REFER TO DETAIL 1/F-501. RISER DRAINS SHALL BE PIPED TO FLOOR DRAIN IN FIRE RISER ROOM.
2	PROVIDE UPRIGHT SPRINKLERS (QUICK RESPONSE) IN AREAS WITHOUT CEILINGS. MOUNT SPRINKLERS WITHIN 12" OF DECK IN ACCORDANCE WITH NFPA 13. PROVIDE FACTORY APPLIED ANTI-CORROSION TEFLON FINISH ON SPRINKLERS.
3	SPRINKLER BRANCH PIPING SERVING 1 SPRINKLER HEAD SHALL BE 1" UNLESS NOTED OTHERWISE, TYPICAL.
4	NEW FIRE MAIN SERVICE, REFER TO CIVIL PLANS FOR CONTINUATION, REFER TO CIVIL PLANS AND SPECIFICATIONS FOR BACKFLOW PREVENTER AND FDC LOCATIONS.
5	PROVIDE SPARE FIRE SPRINKLER CABINET WITH REQUIRED QUANTITY OF SPRINKLERS PER NFPA 13. COORDINATE EXACT MOUNTING LOCATION OF CABINET WITH OWNER. PROVIDE SPRINKLER WRENCH FOR EACH STYLE OF SPRINKLER.
6	PROVIDE CAPPED SPRINKLER PIPE BRANCH FOR FUTURE CORRIDOR.
7	INSPECTOR'S TEST STATION, REFER TO DETAIL 03/F-501.

FIRE SPRINKLER LEGEND

	165° 1/2" SEMI-RECESSED HEAD SPRINKLER
	165° 1/2" CONCEALED SPRINKLER
	165° 1/2" UPRIGHT SPRINKLER
	165° 1/2" UPRIGHT SPRINKLER W/ HEAD GUARD
286°	286° 1/2" UPRIGHT SPRINKLER W/ HEAD GUARD
	165° 1/2" SIDEWALL SPRINKLER
	ELECTRICAL OPERATED VALVE CONNECTED TO FIRE ALARM SYSTEM

NOT ALL SYMBOLS NECESSARILY USED ON DRAWINGS

DRAFT
NOT FOR CONSTRUCTION

AVCON
TRANSFORMING TODAY'S IDEAS INTO TOMORROW'S REALITY

ZEMP PEPPER, P.E.
FL LICENSE NO.:41147
FBPR CERTIFICATE OF AUTHORIZATION NO. 5057

NO.	DATE	REVISION	BY

FIRE PROTECTION 1ST FLOOR PLAN - AREA A

RELEASE FOR BID

AIRPORT TERMINAL AND HANGAR DEVELOPMENT

PREPARED FOR
DEFUNIAK SPRINGS MUNICIPAL AIRPORT

DESIGNED BY:	J. CAGLE
DRAWN BY:	J. CAGLE
CHECKED BY:	Z. PEPPER
APPROVED BY:	Z. PEPPER
PROJECT NO:	2019.028.01
DATE:	November 1, 2021

SHEET NUMBER
F-102

THIS DOCUMENT CONTAINS PRIVILEGED AND PROPRIETARY INFORMATION, ALL OF WHICH IS EXPRESSLY PROVIDED BY AVCON, INC., FOR USE BY THE INTENDED RECIPIENT, AND FOR A SPECIFIC PURPOSE, WITHOUT THE EXPRESS WRITTEN CONSENT OF AVCON, INC. ANY DISTRIBUTION, REPRODUCTION, OR OTHER USE OF THIS DOCUMENT, IN WHOLE OR IN PART, IS STRICTLY PROHIBITED.

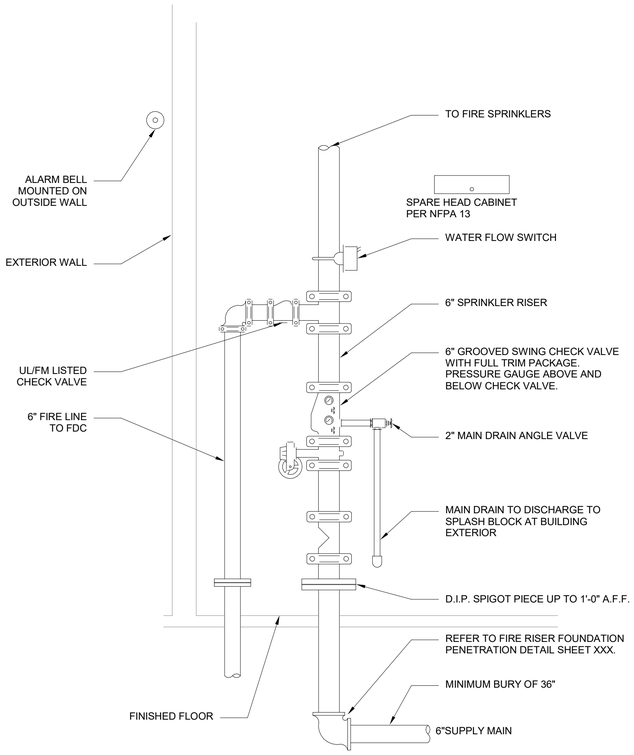

HYDRAULIC CALCULATION PLATE SHALL BE INSTALLED ON THE RISER INDICATING TOTAL DEMAND AT BASE OF RISER

1 FIRE SPRINKLER RISER DETAIL
NOT TO SCALE

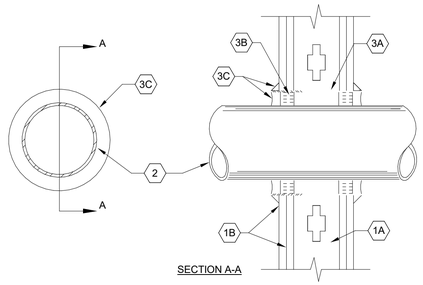

SECTION A-A

SYSTEM NO.W-L-1003
SEPTEMBER 03, 2004
(FORMERLY SYSTEM NO. 147)
F RATINGS - 1 AND 2 HR (SEE ITEM 1)
T RATING - 0 HR

NOTE :
THIS MATERIAL WAS EXTRACTED BY 3M FIRE PROTECTION PRODUCTS FROM THE 2004 EDITION OF THE UL FIRE RESISTANCE DIRECTORY.

1. Wall Assembly - The 1 or 2 hr fire-rated gypsum wallboard/stud wall assembly shall be constructed of the materials and in the manner described in the individual U300 or U400 Series Wall or Partition Design in the UL Fire Resistance Directory and shall include the following construction features:

A. Studs - Wall framing may consist of either wood studs or steel channel studs. Wood studs to consist of nom 2 by 4 in. lumber spaced 16 in. OC with nom 2 by 4 in. lumber end plates and cross braces. Steel studs to be min 3-1/2 in. wide by 1-3/8 in. deep channels spaced max 24 in. OC.
B. Gypsum Board* - Nom 5/8 in. thick, 4 ft. wide with square or tapered edges. The gypsum wallboard type, thickness, number of layers, fastener type and sheet orientation shall be as specified in the individual U300 or U400 Series Design in the UL Fire Resistance Directory. Max diam of opening is 15 in.
The hourly F Rating of the firestop system is equal to the hourly fire rating of the wall assembly in which it is installed.

2. Through Penetrant - One metallic pipe, conduit or tubing to be installed either concentrically or eccentrically within the firestop system. The space between pipes, conduits or tubing and the steel sleeve (Item 3A) shall be min of 0 in. (point contact) to max 2-3/8 in. Pipe, conduit or tubing to be rigidly supported on both sides of wall assembly. The following types and sizes of metallic pipes, conduits or tubing may be used:

A. Steel Pipe - Nom 12 in. diam (or smaller) Schedule 10 (or heavier) steel pipe.
B. Iron Pipe - Nom 12 in. diam (or smaller) service weight (or heavier) cast iron soil pipe, nom 12 in. diam (or smaller) or Class 50 (or heavier) ductile iron pressure pipe.
C. Conduit - Nom 6 in. diam (or smaller) steel conduit or nom 4 in. diam (or smaller) steel electrical metallic tubing.
D. Copper Tubing - Nom 6 in. diam (or smaller) Type L (or heavier) copper tubing.
E. Copper Pipe - Nom 6 in. diam (or smaller) Regular (or heavier) copper pipe.

3. Firestop System - Installed symmetrically on both sides of wall assembly. The details of the firestop system shall be as follows.

A. Steel Sleeve - Cylindrical sleeve fabricated from min 0.019 in. thick (No. 28 gauge) galv sheet steel and having a min 2 in. lap along the longitudinal seam. Length of steel sleeve to be equal to thickness of wall plus 1 to 4 in. such that, when installed, the ends of the sleeve will project approximately 1/2 to 2 in. beyond the surface of the wall on both sides of the wall assembly. Sleeve installed by coiling the sheet steel to a diam smaller than the through opening, inserting the coil through the openings and releasing the coil to let it uncoil against the circular cutouts in the gypsum wallboard layers.
B. Packing Material - Min 1 in. thickness of mineral wool batt insulation firmly packed into steel sleeve on both sides of the wall assembly as permanent forms. Packing material to be recessed min 1/2 in. from end of steel sleeve (flush with or recessed into gypsum wallboard surface) on both sides of wall assembly.
B1. Packing Material - (Not shown) - As an alternate to Item B, nom 1 in. thick polyethylene backer rod may be used. The backer rod is to be recessed within the steel sleeve a min of 1 in. from each surface of wall.
C. Fill,Void or Cavity Materials* - Caulk or Sealant - When mineral wool batt insulation is used, applied to fill the steel sleeve to a min depth of 1/2 in. on both sides of wall assembly. When backer rod is used, a min thickness of 1 in. of CP-25WB+ caulk is required flush with surface of wall. A nom 1/4 in. diam continuous bead of caulk or sealant shall be applied around the circumference of the steel sleeve at its egress from the gypsum wallboard layers on both sides of the wall assembly.

3M COMPANY - CP 25WB+ caulk or FB-3000 WT sealant.

*Bearing the UL Classification Marking

2 FIRESTOP SYSTEM - GYPSUM BOARD WALL UINSULATED METAL PIPE
NOT TO SCALE

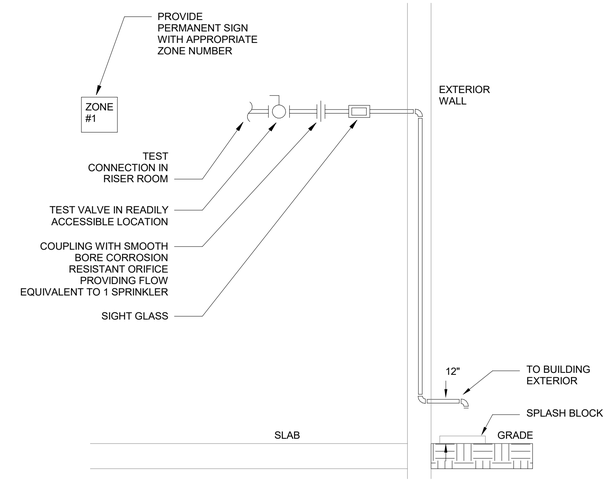

3 SYSTEM TEST CONNECTION FOR WET PIPE SYSTEM
NOT TO SCALE

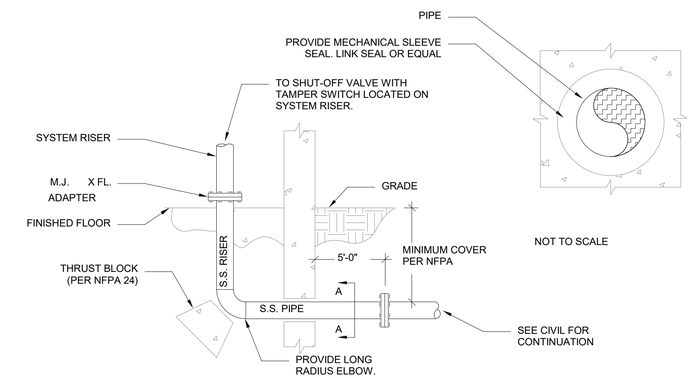

NOT TO SCALE

4 FIRE RISER FOUNDATION PENETRATION DETAIL
NOT TO SCALE

NOTES:

1. U.G. PIPING BY SITE CONTRACTOR TO EXTEND 1'-0" ABOVE FINISHED FLOOR IN BUILDING AT LOCATION SHOWN ON FLOOR PLAN.
2. PROTECTION OF PIPING INCLUDING ARCHING OF FOUNDATION WALL AND DEPTH OF COVER SHALL BE IN ACCORDANCE WITH NFPA-24.
3. PROVIDE TAMPER SWITCHES AT BACKFLOW PREVENTER SERVING FIRE PROTECTION SYSTEM.
4. PROVIDE STAINLESS STEEL TRANSITION RISER (EQUAL TO WATTS TR SERIES). PLASTIC PIPE IS NOT PERMITTED BELOW OR WITHIN 5'-0" OF BUILDING.
5. PROVIDE DI-ELECTRIC FLANGE SET AT TRANSITION TO SYSTEM RISER PIPING MATERIAL.
6. PROVIDE CORROSION PROTECTION PER MANUFACTURER'S RECOMMENDATIONS FOR CORROSIVE SOIL INSTALLATIONS.

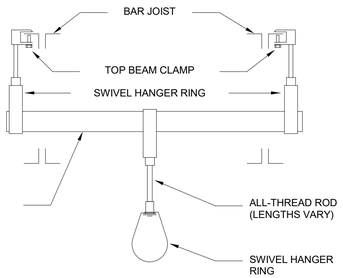

ALL-THREAD ROD SIZES
FOR PIPE UP TO 4" IN DIAMETER, 3/8" ROD TO BE USED
FOR 6" & 8" DIAMETER PIPE, 1/2" ROD TO BE USED

BRANCH LINE PIPE MAY HANG FROM THE BOTTOM OF STEEL. ALL CROSS MAIN PIPING SHALL HANG TO THE TOP OF STEEL.

5 TRAPEZE HANGER DETAIL
NOT TO SCALE

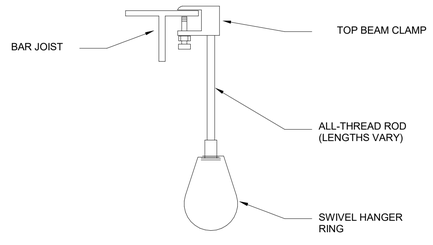

ALL-THREAD ROD SIZES
FOR PIPE UP TO 4" IN DIAMETER, 3/8" ROD TO BE USED
FOR 6" & 8" DIAMETER PIPE, 1/2" ROD TO BE USED

BRANCH LINE PIPE MAY HANG FROM THE BOTTOM OF STEEL. ALL CROSS MAIN PIPING SHALL HANG TO THE TOP OF STEEL.

6 BAR JOIST/BEAM HANGER DETAIL
NOT TO SCALE

STEEL PIPE HANGER
LOCATION DETAIL

PIPE SIZE	A	B	C
1"	3'-0" MAX	12'-0" MAX	3" MIN
1 1/4 "	4'-0" MAX	12'-0" MAX	3" MIN
1 1/2 "- 8"	5'-0" MAX	12'-0" MAX	3" MIN

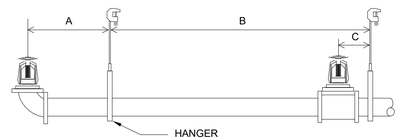

THE UNSUPPORTED LENGTH BETWEEN THE END SPRINKLER AND THE LAST HANGER ON THE LINE SHALL NOT EXCEED 36" FOR 1" PIPE, 48" FOR 1 1/4" PIPE AND 60" FOR 1 1/2" PIPE OR LARGER.

THE CUMULATIVE HORIZONTAL LENGTH OF AN UNSUPPORTED ARMOVER TO A SPRINKLER, SPRINKLER DROP, OR SPRIG-UP SHALL NOT EXCEED 24".

7 PIPE HANGER SCHEDULE
NOT TO SCALE

DRAFT
NOT FOR CONSTRUCTION

AVCON
TRANSFORMING TODAY'S IDEAS INTO TOMORROW'S REALITY

ZEMP PEPPER, P.E.
FL LICENSE NO.:41147
FBPR CERTIFICATE OF AUTHORIZATION NO. 5057

NO.	DATE	REVISION	BY

FIRE PROTECTION DETAILS

RELEASE FOR BID

AIRPORT TERMINAL AND HANGAR DEVELOPMENT

PREPARED FOR
DEFUNIAK SPRINGS MUNICIPAL AIRPORT

DESIGNED BY:	**J. CAGLE**
DRAWN BY:	**J. CAGLE**
CHECKED BY:	**Z. PEPPER**
APPROVED BY:	**Z. PEPPER**
PROJECT NO:	**2019.028.01**
DATE:	**November 1, 2021**

SHEET NUMBER

F-501

THIS DOCUMENT CONTAINS PRIVILEGED AND PROPRIETARY INFORMATION, ALL OF WHICH IS EXPRESSLY PROVIDED BY AVCON, INC., FOR USE BY THE INTENDED RECIPIENT, AND FOR A SPECIFIC PURPOSE. WITHOUT THE EXPRESS WRITTEN CONSENT OF AVCON, INC. ANY DISTRIBUTION, REPRODUCTION, OR OTHER USE OF THIS DOCUMENT, IN WHOLE OR IN PART, IS STRICTLY PROHIBITED.

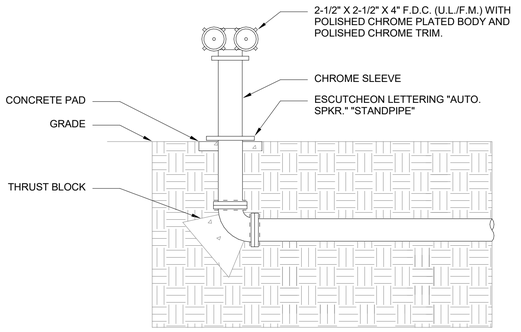

FREE-STRANDING FDC (BY CIVIL DIVISION - FOR INFORMATION ONLY)

1 FIRE DEPARTMENT CONNECTION
NOT TO SCALE

NOTE:

1. FIRE DEPARTMENT CONNECTION THREAD PATTERN SHALL COMPLY WITH REQUIREMENTS OF AUTHORITY HAVING JURISDICTION.
2. PROVIDE WITH KNOX-CAPS AS REQUIRED BY THE AUTHORITY HAVING JURISDICTION.

DRAFT
NOT FOR CONSTRUCTION

AVCON
TRANSFORMING TODAY'S IDEAS INTO TOMORROW'S REALITY

ZEMP PEPPER, P.E.
FL LICENSE NO.:41147
FBPR CERTIFICATE OF AUTHORIZATION NO. 5057

NO.	DATE	REVISION	BY

FIRE PROTECTION DETAILS

RELEASE FOR BID

AIRPORT TERMINAL AND HANGAR DEVELOPMENT

PREPARED FOR

DEFUNIAK SPRINGS MUNICIPAL AIRPORT

DESIGNED BY:	J. CAGLE
DRAWN BY:	J.CAGLE
CHECKED BY:	Z. PEPPER
APPROVED BY:	Z. PEPPER
PROJECT NO:	2019.028.01
DATE:	November 1, 2021

SHEET NUMBER

F-502

THIS DOCUMENT CONTAINS PRIVILEGED AND PROPRIETARY INFORMATION, ALL OF WHICH IS EXPRESSLY PROVIDED BY AVCON, INC., FOR USE BY THE INTENDED RECIPIENT, AND FOR A SPECIFIC PURPOSE. WITHOUT THE EXPRESS WRITTEN CONSENT OF AVCON, INC., ANY DISTRIBUTION, REPRODUCTION, OR OTHER USE OF THIS DOCUMENT, IN WHOLE OR IN PART, IS STRICTLY PROHIBITED.