EDEN ELEMENTARY ADDITION

AND

COOSA VALLEY ELEMENTARY ADDITION

FOR

PELL CITY SCHOOLS

PELL CITY, ALABAMA

LOCATION MAP

EDEN ELEMENTARY SCHOOL
412 WOLF CREEK RD. N.
PELL CITY, AL. 35125

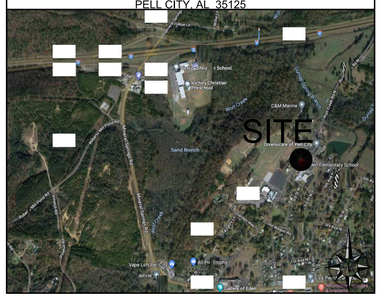

LOCATION MAP

COOSA VALLEY ELEMENTARY SCHOOL
3609 MARTIN ST. S.
CROPWELL, AL. 35054



CONTACTS

OWNER
Pell City Board of Education
1000 Bruce Etheredge Parkway, Suite 201
Pell City, Alabama 3635128
Phone: (205) 814.1010

CIVIL
Morell Engineering, Inc.
112 North Marion Street
Athens, Alabama 35611
Phone: (256) 867.1324

PLUMBING and MECHANICAL
Zgouvas, Eiring and Associates
800 South McDonough Street
Montgomery, Alabama 36104
Phone: (334) 263.4406

ARCHITECTURAL
Mckee and Associates
631 South Hull Street
Montgomery, Alabama 36104
Phone: (334) 834.9933

STRUCTURAL
Day Structures
141 West Main Street
Prattville, Alabama 36067
Phone: (334) 277.9550

ELECTRICAL
Gunn and Associates
3102 Highway 14
Millbrook, AL 36054
Phone: (334) 285.1273

INDEX TO DRAWINGS

GENERAL	
G0.1	TITLE SHEET AND INDEX TO DRAWINGS
G1.0A	SHELTER PLAN - EDEN ELEMENTARY
G1.0B	SHELTER PLAN - COOSA VALLEY ELEMENTARY
G1.1A	CODE PLAN - EDEN ELEMENTARY
G1.1B	CODE PLAN - COOSA VALLEY ELEMENTARY
CIVIL	
C-0.1	GENERAL NOTES - EDEN
C-1.0	EXISTING CONDITIONS - EDEN
C-1.1	DEMOLITION PLAN - EDEN
C-2.0	SITE PLAN - EDEN
C-3.0	GRADING & EROSION CONTROL PLAN - EDEN
C-4.0	UTILITY PLAN - EDEN
C-5.0	STANDARD DETAILS - EDEN
C-0.1	GENERAL NOTES - COOSA VALLEY
C-1.0	EXISTING CONDITIONS - COOSA VALLEY
C-2.0	SITE PLAN - COOSA VALLEY
C-3.0	SITE GRADING & DRAINAGE PLAN - COOSA VALLEY
C-4.0	UTILITY PLAN - COOSA VALLEY
C-4.1	UTILITY PLAN - COOSA VALLEY
C-5.0	EROSION & SEDIMENT CONTROL PLAN - COOSA VALLEY
C-6.0	STANDARD DETAILS - COOSA VALLEY
C-6.1	STANDARD DETAILS - COOSA VALLEY

STRUCTURAL	
S0.1	GENERAL NOTES, TYP. SECTIONS AND SCHEDULES
S0.2	SHELTER NOTES, DETAILS AND SCHEDULES
S0.3	SCHEDULE OF SPECIAL INSPECTIONS
S1.1A	EDEN ELEMENTARY FOUNDATION PLAN
S1.2A	EDEN ELEMENTARY ROOF FRAMING PLAN
S3.1A	EDEN ELEMENTARY SECTIONS
S3.2A	EDEN ELEMENTARY SECTIONS
S1.1B	COOSA VALLEY ELEMENTARY FOUNDATION PLAN
S1.2B	COOSA VALLEY ELEMENTARY ROOF FRAMING PLAN
S3.1B	COOSA VALLEY ELEMENTARY SECTIONS
S3.2B	COOSA VALLEY ELEMENTARY SECTIONS

ARCHITECTURAL	
A0.1	ARCHITECTURAL SITE PLAN - EDEN
A1.1	FLOOR PLAN - EDEN
A1.10	ENLARGED PLAN AND CASEWORK - EDEN
A2.1	REFLECTED CEILING PLAN - EDEN
A3.1	ROOF PLAN - EDEN
A4.1	EXTERIOR ELEVATIONS - EDEN
A5.1	BUILDING SECTIONS - EDEN
A6.1	WALL SECTIONS - EDEN
A7.1	DOOR AND ROOM FINISH SCHEDULE - EDEN
A8.1	MISCELLANEOUS DETAILS - EDEN
A8.2	MISCELLANEOUS DETAILS - EDEN
B0.1	ARCHITECTURAL SITE PLAN - COOSA VALLEY
B1.1	FLOOR PLAN - COOSA VALLEY
B1.10	ENLARGED PLAN AND CASEWORK - COOSA VALLEY
B2.1	REFLECTED CEILING PLAN - COOSA VALLEY
B3.1	ROOF PLAN - COOSA VALLEY
B4.1	EXTERIOR ELEVATIONS - COOSA VALLEY
B5.1	BUILDING SECTIONS - COOSA VALLEY
B6.1	WALL SECTIONS - COOSA VALLEY
B7.1	DOOR AND ROOM FINISH SCHEDULE - COOSA VALLEY
B8.1	MISCELLANEOUS DETAILS - COOSA VALLEY
B8.2	MISCELLANEOUS DETAILS - COOSA VALLEY
PLUMBING	
P1	PLUMBING SCHEDULES, DETAILS AND NOTES
P2	PLUMBING RISERS

P3	PLUMBING FLOOR PLAN/WASTE WATER PIPING
P4	PLUMBING FLOOR PLAN/WATER PIPING
MECHANICAL	
M1	HVAC FLOOR PLANS
M2	SHELTER VENTILATION PLANS
M3	LARGE SCALE MECHANICAL ROOMS AND SECTIONS
M4	HVAC SCHEDULES
M5	HVAC DETAILS
M6	HVAC DETAILS
M7	HVAC O.A. CALCULATIONS
ELECTRICAL	
E0.1	ELECTRICAL LEGEND & NOTES
E2.1	EDEN FLOOR PLAN - LIGHTING
E2.2	COOSA VALLEY FLOOR FLOOR PLAN - LIGHTING
E2.3	LIGHTING CONTROLS, DETAILS & NOTES
E3.1	EDEN FLOOR PLAN - POWER & MECHANICAL POWER
E3.2	COOSA VALLEY FLOOR PLAN - POWER & MECH. POWER
E3.3	GENERAL EQUIPMENT SCHEDULE
E4.1	EDEN FLOOR PLAN - AUXILIARY
E4.2	COOSA VALLEY FLOOR PLAN - AUXILIARY
E5.1	LIGHTING SCHEDULE, DETAILS & NOTES
E5.2	PANELBOARD SCHEDULE, DETAILS & NOTES
E6.1	COMMUNICATIONS RISERS, DETAILS & NOTES
E6.2	FIRE ALARM & INTERCOM RISER DETAILS & NOTES
E7.1	EDEN PARTIAL POWER RISER DIAGRAM, DETAILS & NOTES
E7.2	COOSA VALLEY PARTIAL PWR RSR DIAGRAM, DET.& NOTES

EDEN ELEMENTARY ADDITION
AND
COOSA VALLEY ELEMENTARY SCHOOL ADDITION
FOR
PELL CITY SCHOOLS
PELL CITY, ALABAMA

McKEE and ASSOCIATES
ARCHITECTS, INC.
631 SOUTH HULL STREET MONTGOMERY, ALABAMA 36104 (334) 834-9933

STATE OF ALABAMA
WALTER T. McKEE, JR.
No. 1882
MONTGOMERY, ALA.
REGISTERED ARCHITECT

SHEET TITLE : COVER SHEET AND INDEX TO DRAWINGS

MCKEE JOB # : 21.184

PSCA # : XXX

DRAWN BY : KDD

DATE: 03.03.2022

REVISED DATE:

REVISED DATE:

REVISED DATE:

SHEET NO. : G0.1

- Z:\2021\21-184 Eden Elem &. Coosa Valley Elem Pell City\CAD Drawings\Architectural\Kristie's files\---G0.1 Cover Sheet and Index.dwg
- Thursday, June 9, 2022 11:56:37 AM

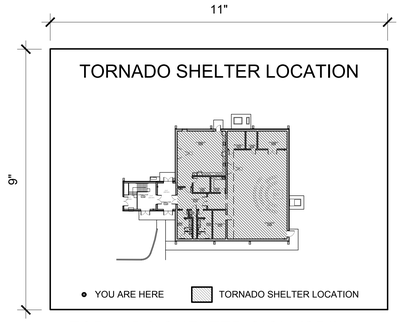

TORNADO SHELTER SIGN (SRI)

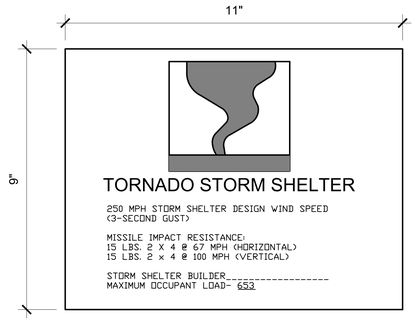

TORNADO SHELTER SIGN (SRB)

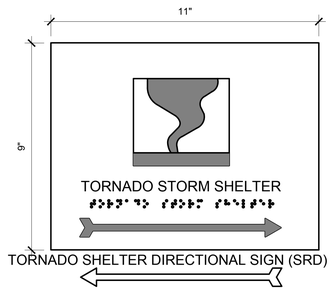

TORNADO SHELTER DIRECTIONAL SIGN (SRD)

SIGN TO BE MOUNTED SO THAT BRAILLE IS NO HIGHER THAN 48" ABOVE FINISH FLOOR

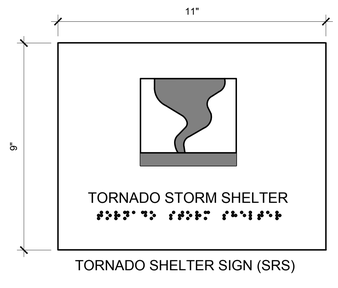

TORNADO SHELTER SIGN (SRS)

SIGN TO BE MOUNTED SO THAT BRAILLE IS NO HIGHER THAN 48" ABOVE FINISH FLOOR

TORNADO SHELTER DESIGN INFORMATION

WIND AND DESIGN LOAD	
DESIGN WIND SPEED	250 MPH
WIND IMPORTANCE FACTOR, I	1.0
WIND EXPOSURE CATAGORY	C
INTERNAL PRESSURE COEFFICIENT, GC_{pi}	+-0.55
TOPOGRAPHIC FACTOR, K_{zt}	1.0
WIND DIRECTIONALITY FACTOR, K_d	1.0
MISSILE IMPACT CRITERIA	100 MPH VERTICALLY 67 MPH HORIZONTALLY
ROOF LIVE LOAD	100 PSF
VENTING AREA (SQ. IN.)	CITING EXCEPTION 304.8 2008 ICC 500
WALL / OPENINGS / DOOR AND WINDOW ASSEMBLIES	
DOOR / ALCOVES /BAFFLED ENTRY	TESTING IN COMPLIANCE WITH ICC-500
WALLS AND ROOF SYSTEMS	TESTING IN COMPLIANCE WITH ICC-500 OR APPENDIX E FEMA 361
GLAZING SYSTEMS	N/A (INTERIOR STORM SHUTTERS COMPLING WITH ICC-500
OPENING PROTECTIVES - LOUVERS OR VENTS	TESTING IN COMLIANCE WITH ICC-500
FLOOD HAZARDS	
SPECIAL FLOOD HAZRD AREA	NO
WITHIN 0.2% OF SFPA	NO
SHELTER AREA FLOOR ELEVATION	522.64

TORNADO SHELTER LEGEND

SYMBOL	DESCRIPTION
	OVERALL SHELTER CONSTRUCTION LIMITS
	EXTENTS OF USABLE SHELTER AREA
1	ONE HOUR FIRE BARRIER WITH 20 MINUTE OPENING PROTECTIVES
2	TWO HOUR FIRE BARRIER WITH 90 MINUTE OPENING PROTECTIVES
3	THREE HOUR FIRE BARRIER
SRS	TORNADO SHELTER ROOM SIGNAGE IN ACCORDANCE WITH ICC 500 - SECTION 504.1.1 & ALABAMA BUILDING COMMISSION BULLETIN JULY 29, 2010, SUBJECT: ADDITIONAL GUIDANCE ON ICC 500 REQUIREMENTS, ATTACHMENT D SHELTER LOCATION SIGNAGE
SRD	TORNADO SHELTER ROOM DIRECTIONAL SIGNAGE (SIGNAGE TO BE POSTED AT EVERY EXIT IN EXISTING BUILDINGS AND CORRIDOR INTERSECTIONS) (CONTRACTOR TO VERIFY EXACT QUANTITY)
SRB	TORNADO SHELTER ROOM DESIGN INFORMATION SIGNAGE IN ACCORDANCE WITH ICC 500 - SECTION 108.1 & ALABAMA BUILDING COMMISSION BULLETIN DATED JULY 29, 2010, SUBJECT: ADDITIONAL GUIDANCE ON ICC 500 REQUIREMENTS ITEM #6 SHELTER SIGNAGE. AND ATTACHMENT C DESIGN INFORMATION SHELTER SIGNAGE. POST OCCUPANT LOAD FOR EACH OCCUPIED SPACE WITHIN SHELTER, POST TOTAL OCCUPANT LOAD OF SHELTER AT "MAIN" DOORS OF SHELTER
FA/#	FIRST AID KIT / NUMBER OF KITS (SEE SPECIFICATIONS)
SRI	TORNADO SHELTER ROOM IDENTIFYING SIGNAGE SIGN INDICATION IN ACCORDANCE WITH ICC 500 - SECTION 504.1.2

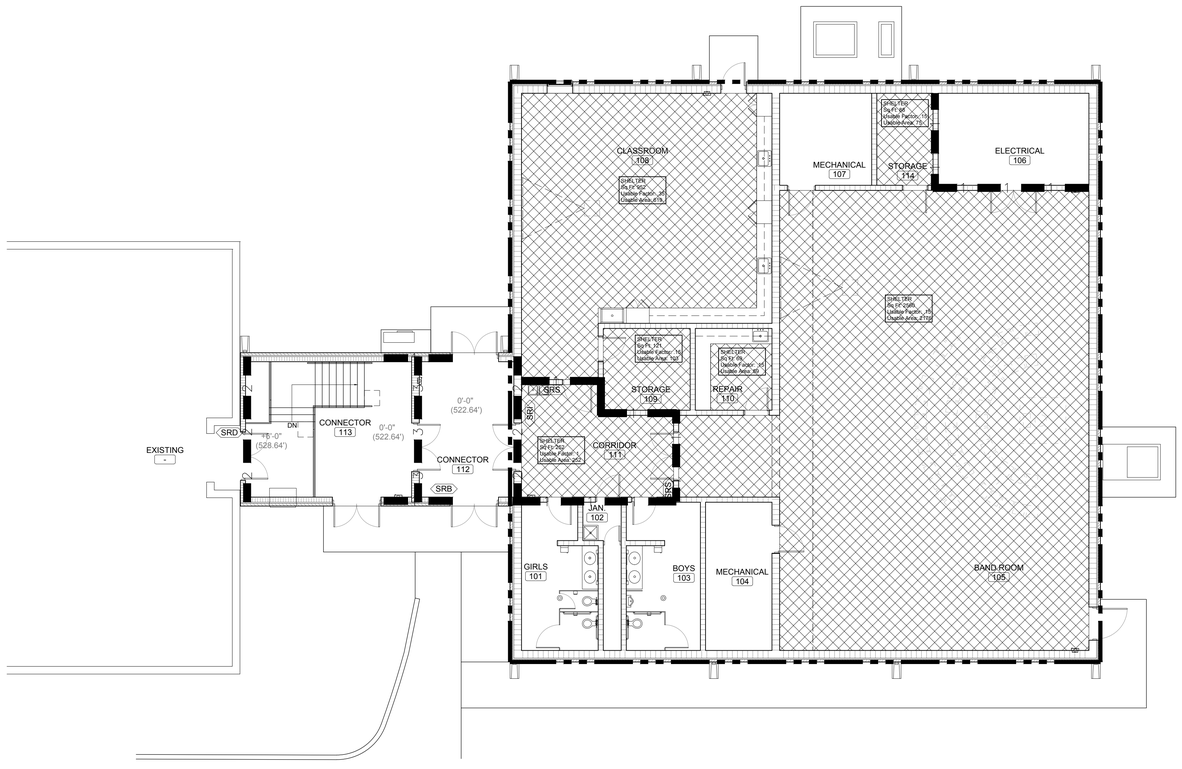

SHELTER PLAN
SCALE: 1/8" = 1'-0"

SHELTER OCCUPANT LOAD

TORNADO SHELTER USEABLE AREA

USEABLE TORNADO SHELTER AREA CALCULATIONS

SHELTER SPACE	SQ. FT.	USABLE REDUCTION FACTOR	USABLE SQ. FT. EACH	TOTAL USABLE SQ. FT.
BAND RM (OPEN PLAN FURNISHINGS)	2560	.15		2176
CORRIDOR	252	0	252	252
CLASSROOM	952	.35	809	619
REPAIR	69	.15	59	59
STORAGE	121	.15	103	103
STORAGE	88	.15	75	75
TOTAL USABLE AREA				3,284 SF

TORNADO SHELTER OCCUPANT CAPACITY (ICC 500 - TABLE 501.1.1)

TORNADO SHELTER OCCUPANT LOAD REQUIRED BY ICC = 1 PER 200 OCCUPANTS = 4 WHEEL CHAIR SPACES REQUIRED.
SPACE FOR WHEELCHAIR OCCUPANTS: 4x10 SQ FT EACH = 40 SQ FT

REMAINING AREA FOR NON WHEELCHAIR OCCUPANTS: 3,284 - 40 = 3,244 SF

MAXIMUM NUMBER OF STANDING OR SITTING OCCUPANTS AT 5 SF EACH: 3,244 / 5 = 649 OCCUPANTS.

TORNADO SHELTER CAPACITY = **653** OCCUPANTS (4 + 649)

PLUMBING CALCULATIONS TORNADO SHELTER

3,244 SQ FT / 5 NET PER PERSON + 4 WHCR= 653 OCCUPANTS

TOILETS (TABLE 702.2)ICC 500 2014
(2 TOILETS MINIMUM)
(1 PER 500 OCC.) **2** REQUIRED **3** PROVIDED

LAVATORIES (TABLE 702.2)CC 500 2014
(1 PER 1,000 OCC.) **1** REQUIRED **4** PROVIDED

EDEN ELEMENTARY ADDITION
AND
COOSA VALLEY ELEMENTARY SCHOOL ADDITION
FOR
PELL CITY SCHOOLS
PELL CITY, ALABAMA

McKEE and ASSOCIATES
ARCHITECTS, INC.
631 SOUTH HULL STREET MONTGOMERY, ALABAMA 36104 (334) 834-9933

STATE OF ALABAMA REGISTERED ARCHITECT
WALTER T. McKEE, JR.
No. 1882
MONTGOMERY, ALA.

SHEET TITLE : EDEN ELEMENTARY SHELTER PLAN

MCKEE JOB # : 21.184

PSCA # : XXX

DRAWN BY : KDD

DATE: 06.01.2022

REVISED DATE:

REVISED DATE:

REVISED DATE:

SHEET NO. : G1.0A

- I:\Users\kristiedieguez\ARCHITECT\McKEE ASSOCIATES\Eden Elem Art & Band Storm Shelter 21-185~~G1.0A Shelter Plan EDEN.dwg
- Tuesday, June 07, 2022 9:37:53 AM

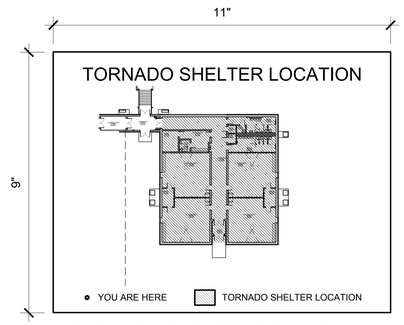

TORNADO SHELTER SIGN (SRI)

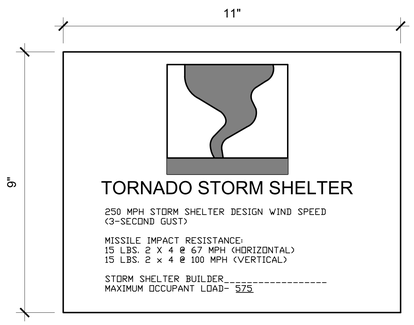

TORNADO SHELTER SIGN (SRB)

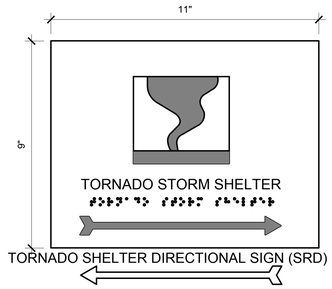

TORNADO SHELTER DIRECTIONAL SIGN (SRD)

SIGN TO BE MOUNTED SO THAT BRAILLE IS NO HIGHER THAN 48" ABOVE FINISH FLOOR

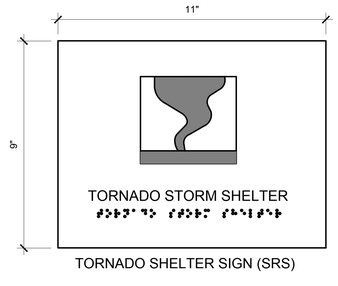

TORNADO SHELTER SIGN (SRS)

SIGN TO BE MOUNTED SO THAT BRAILLE IS NO HIGHER THAN 48" ABOVE FINISH FLOOR

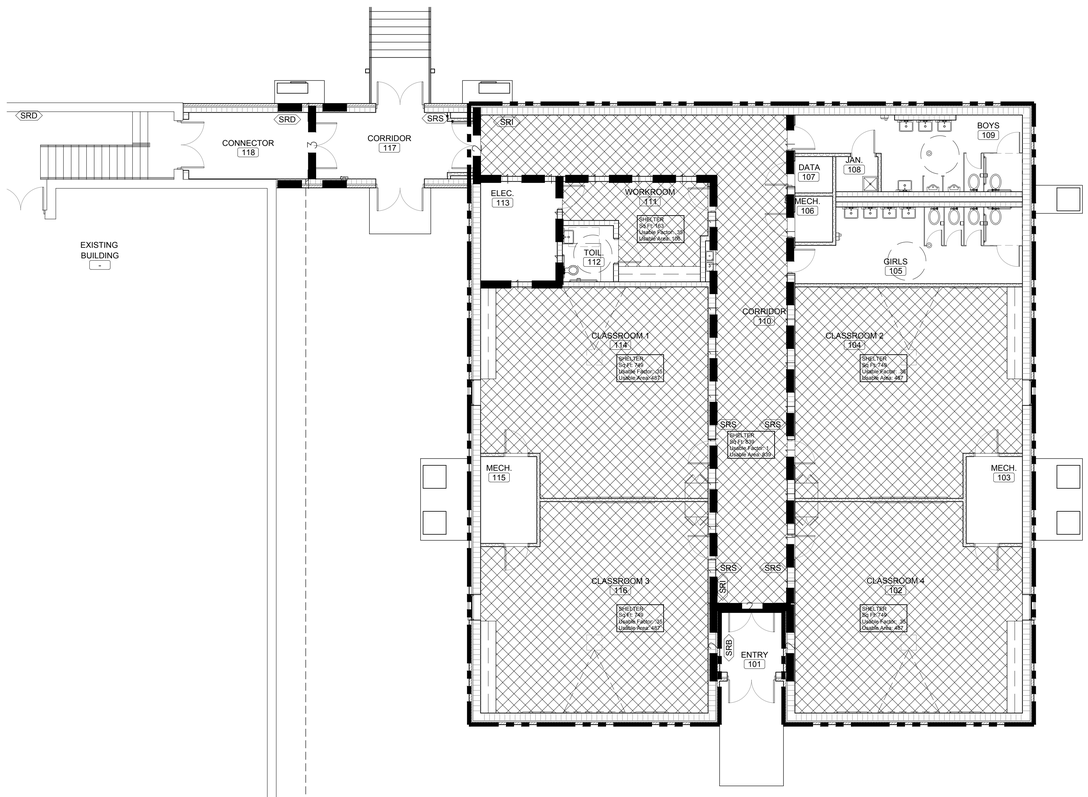

SHELTER PLAN
SCALE: 1/8" = 1'-0"

TORNADO SHELTER DESIGN INFORMATION

WIND AND DESIGN LOAD	
DESIGN WIND SPEED	250 MPH
WIND IMPORTANCE FACTOR, I	1.0
WIND EXPOSURE CATAGORY	C
INTERNAL PRESSURE COEFFICIENT, GC_{pi}	+-0.55
TOPOGRAPHIC FACTOR, K_{zt}	1.0
WIND DIRECTIONALITY FACTOR, K_d	1.0
MISSILE IMPACT CRITERIA	100 MPH VERTICALLY 67 MPH HORIZONTALLY
ROOF LIVE LOAD	100 PSF
VENTING AREA (SQ. IN.)	CITING EXCEPTION 304.8 2008 ICC 500
WALL / OPENINGS / DOOR AND WINDOW ASSEMBLIES	
DOOR / ALCOVES /BAFFLED ENTRY	TESTING IN COMPLIANCE WITH ICC-500
WALLS AND ROOF SYSTEMS	TESTING IN COMPLIANCE WITH ICC-500 OR APPENDIX E FEMA 361
GLAZING SYSTEMS	N/A (INTERIOR STORM SHUTTERS COMPLING WITH ICC-500
OPENING PROTECTIVES - LOUVERS OR VENTS	TESTING IN COMLIANCE WITH ICC-500
FLOOD HAZARDS	
SPECIAL FLOOD HAZRD AREA	NO
WITHIN 0.2% OF SFPA	NO
SHELTER AREA FLOOR ELEVATION	505.86

TORNADO SHELTER LEGEND

SYMBOL	DESCRIPTION
	OVERALL SHELTER CONSTRUCTION LIMITS
	EXTENTS OF USABLE SHELTER AREA
1	ONE HOUR FIRE BARRIER WITH 20 MINUTE OPENING PROTECTIVE'S
2	TWO HOUR FIRE BARRIER WITH 90 MINUTE OPENING PROTECTIVE'S
3	THREE HOUR FIRE BARRIER WITH 90 MINUTE OPENING PROTECTIVES
SRS	TORNADO SHELTER ROOM SIGNAGE IN ACCORDANCE WITH ICC 500 - SECTION 504.1.1 & ALABAMA BUILDING COMMISSION BULLETIN JULY 29, 2010, SUBJECT: ADDITIONAL GUIDANCE ON ICC 500 REQUIREMENTS, ATTACHMENT D SHELTER LOCATION SIGNAGE
SRD	TORNADO SHELTER ROOM DIRECTIONAL SIGNAGE (SIGNAGE TO BE POSTED AT EVERY EXIT IN EXISTING BUILDINGS AND CORRIDOR INTERSECTIONS) (CONTRACTOR TO VERIFY EXACT QUANTITY)
SRB	TORNADO SHELTER ROOM DESIGN INFORMATION SIGNAGE IN ACCORDANCE WITH ICC 500 - SECTION 108.1 & ALABAMA BUILDING COMMISSION BULLETIN DATED JULY 29, 2010, SUBJECT: ADDITIONAL GUIDANCE ON ICC 500 REQUIREMENTS ITEM #6 SHELTER SIGNAGE. AND ATTACHMENT C DESIGN INFORMATION SHELTER SIGNAGE. POST OCCUPANT LOAD FOR EACH OCCUPIED SPACE WITHIN SHELTER, POST TOTAL OCCUPANT LOAD OF SHELTER AT "MAIN" DOORS OF SHELTER
FA/#	FIRST AID KIT / NUMBER OF KITS (SEE SPECIFICATIONS)
SRI	TORNADO SHELTER ROOM IDENTIFYING SIGNAGE SIGN INDICATION IN ACCORDANCE WITH ICC 500 - SECTION 504.1.2
TSV1	PROVIDE PERMANENT SIGNAGE TO INDICATE REQUIREMENT AT VENTILATION SHAFTS AS PER ICC 500 107.2.6 (3)- SEE SHEET G1.4 FOR MORE INFO

SHELTER OCCUPANT LOAD

TORNADO SHELTER USEABLE AREA

USEABLE TORNADO SHELTER AREA CALCULATIONS

SHELTER SPACE	SQ. FT.	USABLE REDUCTION FACTOR	USABLE SQ. FT. EACH	TOTAL USABLE SQ. FT.
CORRIDOR	839	0	839	839
CLASSROOM (4) 749 EA.	2996	.35	487	1948
WORKROOM	163	.35	106	106
TOTAL USABLE AREA				2,893 SF

TORNADO SHELTER OCCUPANT CAPACITY (ICC 500 - TABLE 501.1.1)

TORNADO SHELTER OCCUPANT LOAD REQUIRED BY ICC = 1 PER 200 OCCUPANTS = 1 WHEELCHAIR SPACES REQUIRED.
SPACE FOR WHEELCHAIR OCCUPANTS: 4x10 SQ FT EACH = 10 SQ FT

REMAINING AREA FOR NON WHEELCHAIR OCCUPANTS: 2,893 - 40 = 2,853 SF

MAXIMUM NUMBER OF STANDING OR SITTING OCCUPANTS AT 5 SF EACH: 2,853 / 5 = 571 OCCUPANTS.

TORNADO SHELTER CAPACITY = **575** OCCUPANTS (4 + 571)

PLUMBING CALCULATIONS TORNADO SHELTER

2,853 SQ FT / 5 NET PER PERSON + 4 WHCR= 575 OCCUPANTS

TOILETS (TABLE 702.2)ICC 500 2014
(2 TOILETS MINIMUM)
(1 PER 500 OCC.) **2** REQUIRED **6** PROVIDED

LAVATORIES (TABLE 702.2)ICC 500 2014
(1 PER 1,000 OCC.) **1** REQUIRED **8** PROVIDED

EDEN ELEMENTARY ADDITION
AND
COOSA VALLEY ELEMENTARY SCHOOL ADDITION
FOR
PELL CITY SCHOOLS
PELL CITY, ALABAMA

McKEE and ASSOCIATES
ARCHITECTS, INC.
631 SOUTH HULL STREET MONTGOMERY, ALABAMA 36104 (334) 834-9933

STATE OF ALABAMA REGISTERED ARCHITECT
WALTER T. McKEE, JR.
No. 1082
MONTGOMERY, ALA.

SHEET TITLE : COOSA VALLEY ELEM. SHELTER PLAN

MCKEE JOB # : 21.184

PSCA # : XXX

DRAWN BY : KDD

DATE: 06.01.2022

REVISED DATE:

REVISED DATE:

REVISED DATE:

SHEET NO. : G1.0B

- /Users/kristiedeguez/ARCHITECT/McKEE ASSOCIATES/Coosa Valley Classroom Addition 21-184/~G1.0B Shelter Plan COOSA.dwg
- Tuesday, June 07, 2022 9:37:56 AM

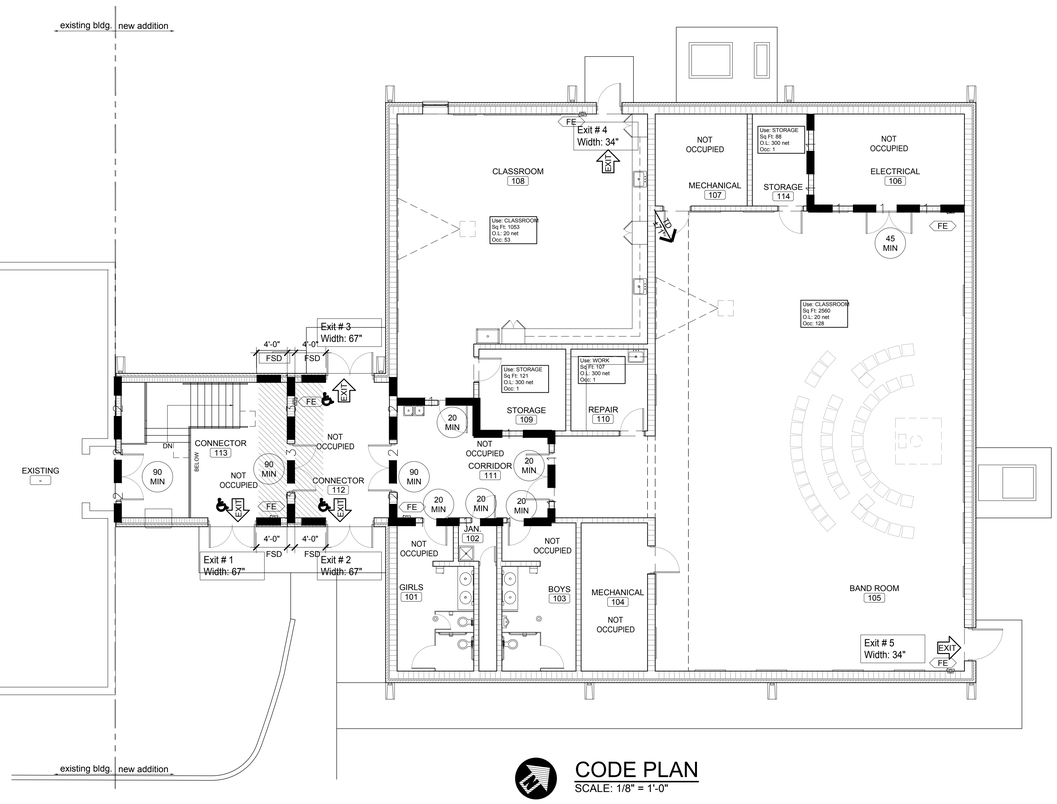

CODE PLAN
SCALE: 1/8" = 1'-0"

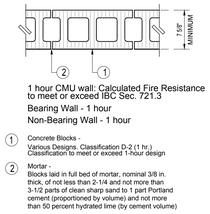

1 hour CMU wall: Calculated Fire Resistance to meet or exceed IBC Sec. 721.3

Bearing Wall - 1 hour
Non-Bearing Wall - 1 hour

1. Concrete Blocks - Various Designs. Classification D-2 (1 hr.) Classification to meet or exceed 1-hour design
2. Mortar - Blocks laid in full bed of mortar, nominal 3/8 in. thick, of not less than 2-1/4 and not more than 3-1/2 parts of clean sharp sand to 1 part Portland cement (proportioned by volume) and not more than 50 percent hydrated lime (by cement volume)

ONE-HOUR FIRE RATED PARTITION PLAN DETAIL
1
SCALE: 1" = 1'-0"

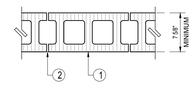

UL Design No. U905 - 2 hour wall

Bearing Wall - 2 hour
Non-Bearing Wall - 2 hour

1. Concrete Blocks - Various Designs. Classification C-2 (2 hr.)
2. Mortar - Blocks laid in full bed of mortar, nominal 3/8 in. thick, of not less than 2-1/4 and not more than 3-1/2 parts of clean sharp sand to 1 part Portland cement (proportioned by volume) and not more than 50 percent hydrated lime (by cement volume) Vertical joints staggered (running bond).

TWO-HOUR FIRE RATED WALL PLAN DETAIL
2
SCALE: 1" = 1'-0"

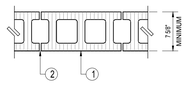

UL Design No. U904 - 3 hour wall

Bearing Wall - 3 hour
Non-Bearing Wall - 3 hour

1. Concrete Blocks - Various Designs. Classification C-3 (3 hr.)
2. Mortar - Blocks laid in full bed of mortar, nominal 3/8 in. thick, of not less than 2-1/4 and not more than 3-1/2 parts of clean sharp sand to 1 part Portland cement (proportioned by volume) and not more than 50 percent hydrated lime (by cement volume) Vertical joints staggered (running bond).

THREE-HOUR FIRE RATED WALL PLAN DETAIL
3
SCALE: 1" = 1'-0"

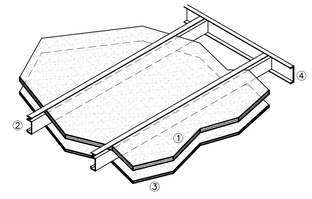

1. 1" LINER PANELS OR 2-LAYERS 1/2" FIRECODE "C" WALLBOARD INSERTED IN C-H STUDS 24" O.C..
2. 600CH20 (6", 20 GA.) STUDS 24" O.C. (SEE LIMITING SPAN NOTE)
3. SINGLE-LAYER 5/8" FIRECODE "C" WALLBOARD SCREW-ATTACHED TO STUDS.
4. SET C-H STUDS IN 20 GA. RUNNERS ANCHORED TO WALL AT 24" O.C. MAX.

LIMITING SPAN NOTE: INSTALL DOUBLE 6" E-STUDS FOR SPANS EXCEEDING 17'-5"

NOTE: ONE-HOUR FIRE-RATED HORIZONTAL SHAFT WALL ASSEMBLY EQUAL TO TEST NO. WHI-495PSH

ONE-HOUR FIRE RATED ROOF / CEILING ASSEMBLY ISOMETRIC DETAIL
4
SCALE: 3/4" = 1'-0"

CODE LEGEND

SYMBOL	DESCRIPTION
1	ONE HOUR FIRE RATED PARTITION UL# - XXX - SEE SECTION 1/G1.1A
2	TWO HOUR FIRE RATED PARTITION UL# - XXX- SEE SECTION 2/G1.1A
3	THREE HOUR FIRE RATED PARTITION UL# - XXX - SEE SECTION 3/G1.1A
	ONE HOUR FIRE RATED CEILING ASSEMBLY UL# - P522 - SEE SECTION 4/G1.1A
EXIT	PRIMARY BUILDING EXIT
TD 250'	TRAVEL DISTANCE NEAREST TO EXIT
	HANDICAP ACCESSIBLE
FE	FIRE EXTINGUISHER LOCATION (SEE DETAIL AX.X)
FSD	FIRE SEPERATION DISTANCE
EWR-10" EWP-34"	EXIT WIDTH REQUIRED EXIT WIDTH PROVIDED
168 340	ACTUAL OCCUPANT LOAD SERVED TOTAL EGRESS CAPACITY
3/4 HOUR	RATED DOOR ASSEMBLY

CODE REVIEW

CODE: **2015 INTERNATIONAL BUILDING CODE**

OCCUPANCY TYPE: **GROUP 'E'**

SPRINKLERED: **NO**

NUMBER OF STORIES: **ONE**

CONSTRUCTION TYPE: **TYPE II-B**

TYPE **II-B**, REQUIRES THE FOLLOWING
FIRE RESISTANCE (TABLE 601):

STRUCTURAL FRAME:	**0 HOUR**
EXTERIOR BEARING WALLS:	**0 HOUR**
INTERIOR BEARING WALLS:	**0 HOUR**
EXTERIOR NONBEARING WALLS:	**0 HOUR**
INTERIOR NONBEARING WALLS:	**0 HOUR**
FLOOR CONSTRUCTION:	**0 HOUR**
ROOF CONSTRUCTION:	**0 HOUR**

OTHER REQUIREMENTS: FIRE BARRIER REQUIRED FOR UNSPRINKERED "E" OCCUPANCY FIRE AREA THAT EXCEEDS 12,000 SQ FT.
FIRE AREAS 1 AND 2 ARE INDICATED ON PLAN. BOTH AREAS ARE LESS THAN 12,000 SQ FT.
FIRE BARRIER RATING = 2 HOURS PER TABLE 707.3.10

FIRE WALL RATING (TABLE 706.4)**2 HOUR** (PER FOOTNOTE "a")

EXIT ACCESS TRAVEL DISTANCE =
200 FEET FOR UNSPRINKLERED **E** OCCUPANCY (TABLE 1017.2)

FIRE SEPARATION DISTANCE REQUIREMENTS:
1. EXTERIOR WALLS FIRE RATING (TABLE 602): 0 HOURS REQUIRED
2. FIRE SEPARATION DISTANCE (TABLE 705.8): 10 FT TO LESS THAN 15 FEET.
3. OPENING PROTECTION: UNPROTECTED OPENINGS, NONSPRINKLERED. ALLOWABLE AREA = 15%. ACTUAL AREAS: EXIST. CLASSROOM BLDG EAST WALL = 112 SF (12.4%) NEW CLASSROOM BLDG WEST WALL = 127 SF (2.2%)

PLUMBING CALCULATIONS

PLUMBING REQUIREMENTS USE GROUP 'E'
BASED ON OCCUPANT LOAD = 184 PERSONS

TOILETS (TABLE 2902.1)
MEN'S (1 PER 50 OCC.) (**92** OCC.): **2R**
WOMEN'S (1 PER 50 OCC.) (**92** OCC.): **2R**

LAVATORIES (TABLE 2902.1)
MEN'S (1 PER 50 OCC.) (92 OCC.): **2R**
WOMEN'S (1 PER 50 OCC.) (**92** OCC.): **2R**

DRINKING FOUNTAINS (TABLE 2902.1)
(1 PER 100.): **2R**

SERVICE SINK (TABLE 2902.1):**1R**

PLUMBING PROVIDED TOTAL

TOILETS (TABLE 2902.1)
MEN'S - 1 W.C. 1 URINALS PROVIDED
WOMEN'S - 2 PROVIDED

LAVATORIES (TABLE 2902.1)
MEN'S - 2 PROVIDED
WOMEN'S - 2 PROVIDED

DRINKING FOUNTAINS (TABLE 2902.1)
2 PROVIDED

SERVICE SINK (TABLE 2902.1):
1 PROVIDED

EXIT CALCULATIONS

TOTAL BUILDING AREA

OCCUPANCY TYPE - GROUP **'E'**
BUILDING TYPE: **II-B**
ALLOWABLE SF: **14,500** SQ FT (TABLE 506.2)
ACTUAL SF - **6,530 SQ. FT.**
ALLOWABLE HEIGHT (TABLE 504.3) ALLOWABLE # OF STORIES (TABLE 504.4)
ALLOWABLE HEIGHT: **55** FT
ALLOWABLE NO. OF STORIES: **2**
ACTUAL BUILDING HEIGHT:**± 18** FT
ACTUAL NO. OF STORIES: **1**

OCCUPANT LOAD

OCCUPANT LOAD TOTAL(1004 & TABLE 1004.1.2)=
184 PERSONS

EXIT REQUIREMENTS

EXIT ACCESS (TABLE 1006.2.1 & TABLE 1006.3.1)
NO. OF EXITS REQUIRED: **2**
NO. OF EXITS FURNISHED: **5**

MEANS OF EGRESS WIDTH (1005.3)
SEE PLAN FOR EXIT WIDTHS

CORRIDORS (TABLE 1020.1): CORRIDORS SERVING MORE THAN 30 OCCUPANTS IN UNSPRINKLERED**'E'** OCCUPANCY SHALL HAVE A 1-HOUR WALL.

MINIMUM CORRIDOR WIDTH (TABLE 1020.2)**72** INCHES

EDEN ELEMENTARY ADDITION
AND
COOSA VALLEY ELEMENTARY SCHOOL ADDITION
FOR
PELL CITY SCHOOLS
PELL CITY, ALABAMA

McKEE and ASSOCIATES
ARCHITECTS, INC.
631 SOUTH HULL STREET MONTGOMERY, ALABAMA 36104 (334) 834-9933

STATE OF ALABAMA REGISTERED ARCHITECT
WALTER T. McKEE, JR.
No. 1082
MONTGOMERY, ALA.

SHEET TITLE : EDEN ELEMENTARY CODE PLAN

MCKEE JOB # : 21.184

PSCA # : XXX

DRAWN BY : KDD

DATE: 06.01.2022

REVISED DATE:

REVISED DATE:

REVISED DATE:

SHEET NO. : G1.1A

- /Users/kristiedeguez/ARCHITECT/McKEE ASSOCIATES/Eden Elem Art & Band Storm Shelter 21-185/~G1.1A Code Plan EDEN.dwg
- Tuesday, June 07, 2022 9:37:57 AM

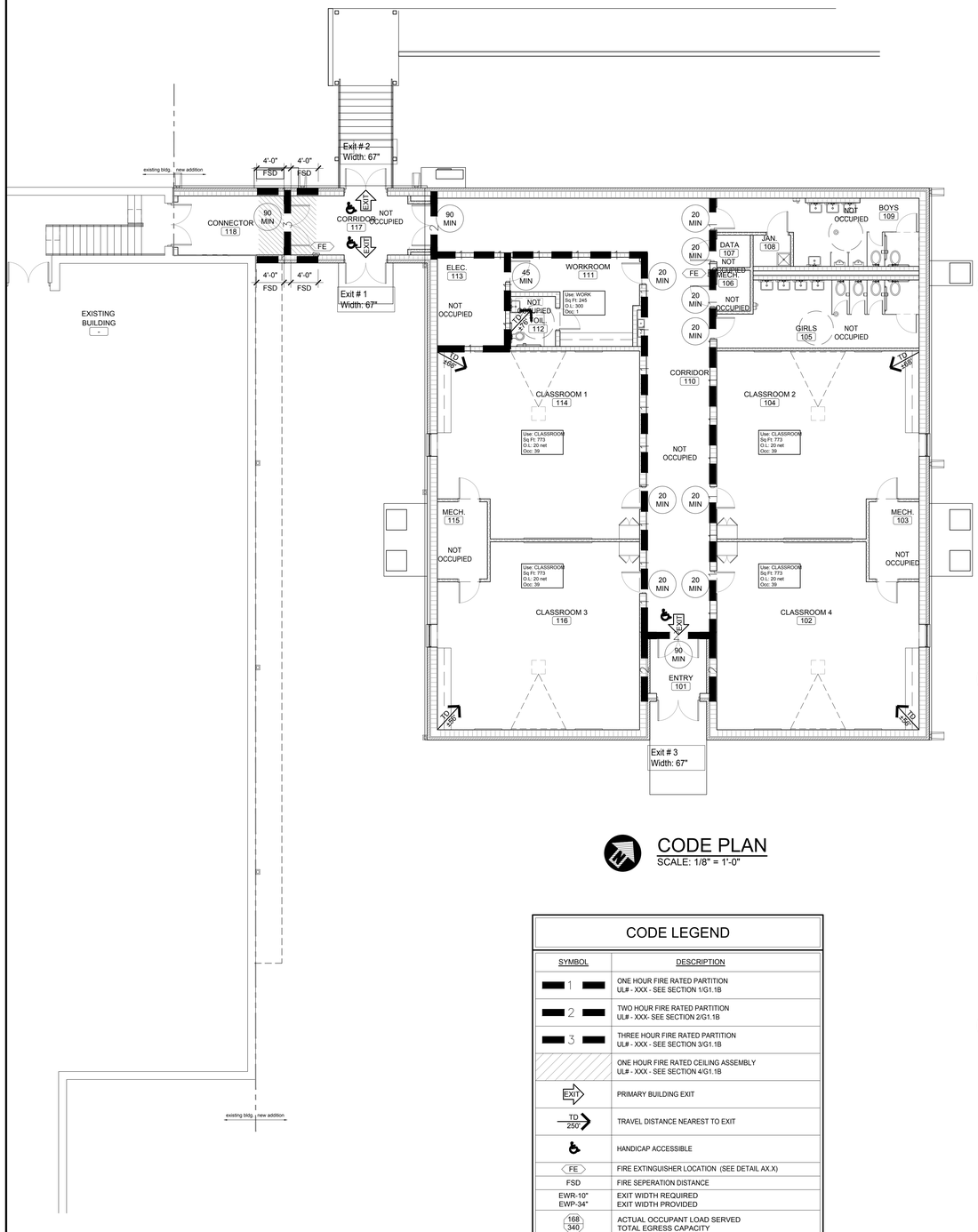

CODE PLAN
SCALE: 1/8" = 1'-0"

CODE LEGEND

SYMBOL	DESCRIPTION
1	ONE HOUR FIRE RATED PARTITION UL# - XXX - SEE SECTION 1/G1.1B
2	TWO HOUR FIRE RATED PARTITION UL# - XXX- SEE SECTION 2/G1.1B
3	THREE HOUR FIRE RATED PARTITION UL# - XXX - SEE SECTION 3/G1.1B
	ONE HOUR FIRE RATED CEILING ASSEMBLY UL# - XXX - SEE SECTION 4/G1.1B
EXIT	PRIMARY BUILDING EXIT
TD 250'	TRAVEL DISTANCE NEAREST TO EXIT
	HANDICAP ACCESSIBLE
FE	FIRE EXTINGUISHER LOCATION (SEE DETAIL AX.X)
FSD	FIRE SEPERATION DISTANCE
EWR-10" EWP-34"	EXIT WIDTH REQUIRED EXIT WIDTH PROVIDED
168 340	ACTUAL OCCUPANT LOAD SERVED TOTAL EGRESS CAPACITY
3/4 HOUR	RATED DOOR ASSEMBLY

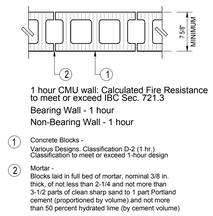

1 hour CMU wall: Calculated Fire Resistance to meet or exceed IBC Sec. 721.3

Bearing Wall - 1 hour
Non-Bearing Wall - 1 hour

1. Concrete Blocks - Various Designs. Classification D-2 (1 hr.) Classification to meet or exceed 1-hour design
2. Mortar - Blocks laid in full bed of mortar, nominal 3/8 in. thick, of not less than 2-1/4 and not more than 3-1/2 parts of clean sharp sand to 1 part Portland cement (proportioned by volume) and not more than 50 percent hydrated lime (by cement volume)

ONE-HOUR FIRE RATED PARTITION PLAN DETAIL
1
SCALE: 1" = 1'-0"

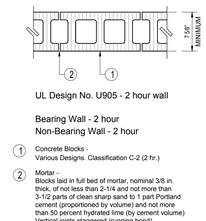

UL Design No. U905 - 2 hour wall

Bearing Wall - 2 hour
Non-Bearing Wall - 2 hour

1. Concrete Blocks - Various Designs. Classification C-2 (2 hr.)
2. Mortar - Blocks laid in full bed of mortar, nominal 3/8 in. thick, of not less than 2-1/4 and not more than 3-1/2 parts of clean sharp sand to 1 part Portland cement (proportioned by volume) and not more than 50 percent hydrated lime (by cement volume) Vertical joints staggered (running bond).

TWO-HOUR FIRE RATED WALL PLAN DETAIL
2
SCALE: 1" = 1'-0"

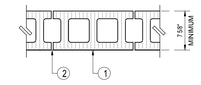

UL Design No. U904 - 3 hour wall

Bearing Wall - 3 hour
Non-Bearing Wall - 3 hour

1. Concrete Blocks - Various Designs. Classification C-3 (3 hr.)
2. Mortar - Blocks laid in full bed of mortar, nominal 3/8 in. thick, of not less than 2-1/4 and not more than 3-1/2 parts of clean sharp sand to 1 part Portland cement (proportioned by volume) and not more than 50 percent hydrated lime (by cement volume) Vertical joints staggered (running bond).

THREE-HOUR FIRE RATED WALL PLAN DETAIL
3
SCALE: 1" = 1'-0"

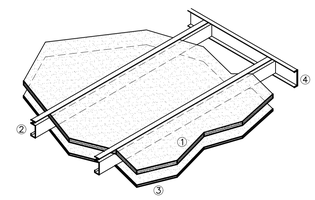

1. 1" LINER PANELS OR 2-LAYERS 1/2" FIRECODE "C" WALLBOARD INSERTED IN C-H STUDS 24" O.C..
2. 600CH20 (6", 20 GA.) STUDS 24" O.C. (SEE LIMITING SPAN NOTE)
3. SINGLE-LAYER 5/8" FIRECODE "C" WALLBOARD SCREW-ATTACHED TO STUDS.
4. SET C-H STUDS IN 20 GA. RUNNERS ANCHORED TO WALL AT 24" O.C. MAX.

LIMITING SPAN NOTE: INSTALL DOUBLE 6" E-STUDS FOR SPANS EXCEEDING 17'-5"

NOTE: ONE-HOUR FIRE-RATED HORIZONTAL SHAFT WALL ASSEMBLY EQUAL TO TEST NO. WHI-495PSH

ONE-HOUR FIRE RATED ROOF / CEILING ASSEMBLY ISOMETRIC DETAIL
4
SCALE: 3/4" = 1'-0"

CODE REVIEW

CODE: **2015 INTERNATIONAL BUILDING CODE**

OCCUPANCY TYPE: **GROUP 'E'**

SPRINKLERED: **NO**

NUMBER OF STORIES: **ONE**

CONSTRUCTION TYPE: **TYPE II-B**

TYPE **II-B**, REQUIRES THE FOLLOWING
FIRE RESISTANCE (TABLE 601):

STRUCTURAL FRAME:	**0 HOUR**
EXTERIOR BEARING WALLS:	**0 HOUR**
INTERIOR BEARING WALLS:	**0 HOUR**
EXTERIOR NONBEARING WALLS:	**0 HOUR**
INTERIOR NONBEARING WALLS:	**0 HOUR**
FLOOR CONSTRUCTION:	**0 HOUR**
ROOF CONSTRUCTION:	**0 HOUR**

OTHER REQUIREMENTS: FIRE BARRIER REQUIRED FOR UNSPRINKERED "E" OCCUPANCY FIRE AREA THAT EXCEEDS 12,000 SQ FT.
FIRE AREAS 1 AND 2 ARE INDICATED ON PLAN. BOTH AREAS ARE LESS THAN 12,000 SQ FT.
FIRE BARRIER RATING = 2 HOURS PER TABLE 707.3.10

FIRE WALL RATING (TABLE 706.4)**2 HOUR** (PER FOOTNOTE "a")

EXIT ACCESS TRAVEL DISTANCE =
200 FEET FOR UNSPRINKLERED **E** OCCUPANCY (TABLE 1017.2)

FIRE SEPARATION DISTANCE REQUIREMENTS:
1. EXTERIOR WALLS FIRE RATING (TABLE 602): 0 HOURS REQUIRED
2. FIRE SEPARATION DISTANCE (TABLE 705.8): 10 FT TO LESS THAN 15 FEET.
3. OPENING PROTECTION: UNPROTECTED OPENINGS, NONSPRINKLERED.
   ALLOWABLE AREA = 15%. ACTUAL AREAS: EXIST. CLASSROOM BLDG EAST WALL = 112 SF (12.4%) NEW CLASSROOM BLDG WEST WALL = 127 SF (2.2%)

PLUMBING CALCULATIONS

PLUMBING REQUIREMENTS USE GROUP 'E'
BASED ON OCCUPANT LOAD =157 PERSONS

TOILETS (TABLE 2902.1)
MEN'S (1 PER 50 OCC.) (**79** OCC.): **2R**
WOMEN'S (1 PER 50 OCC.) (**79** OCC.): **2R**

LAVATORIES (TABLE 2902.1)
MEN'S (1 PER 50 OCC.) (79 OCC.): **2R**
WOMEN'S (1 PER 50 OCC.) (**79** OCC.): **2R**

DRINKING FOUNTAINS (TABLE 2902.1)
(1 PER 100.): **2R**

SERVICE SINK (TABLE 2902.1): **1R**

PLUMBING PROVIDED TOTAL

TOILETS (TABLE 2902.1)
MEN'S - 2 W.C. 2 URINALS PROVIDED
WOMEN'S - 4 PROVIDED
TOILET: 1 UNISEX PROVIDED

LAVATORIES (TABLE 2902.1)
MEN'S - 4 PROVIDED
WOMEN'S - 4 PROVIDED
TOILET: 1 UNISEX PROVIDED

DRINKING FOUNTAINS (TABLE 2902.1)
2 PROVIDED

SERVICE SINK (TABLE 2902.1):
1 PROVIDED

EXIT CALCULATIONS

TOTAL BUILDING AREA

OCCUPANCY TYPE - GROUP **'E'**
BUILDING TYPE: **II-B**
ALLOWABLE SF: **14,500** SQ FT (TABLE 506.2)
ACTUAL SF - **6,252 SQ. FT.**
ALLOWABLE HEIGHT (TABLE 504.3) ALLOWABLE # OF STORIES (TABLE 504.4)
ALLOWABLE HEIGHT: **55** FT
ALLOWABLE NO. OF STORIES: **2**
ACTUAL BUILDING HEIGHT: **± 15** FT
ACTUAL NO. OF STORIES: **1**

OCCUPANT LOAD

OCCUPANT LOAD TOTAL(1004 & TABLE 1004.1.2)=
157 PERSONS

EXIT REQUIREMENTS

EXIT ACCESS (TABLE 1006.2.1 & TABLE 1006.3.1)
NO. OF EXITS REQUIRED: **2**
NO. OF EXITS FURNISHED: **3**

MEANS OF EGRESS WIDTH (1005.3)
SEE PLAN FOR EXIT WIDTHS

CORRIDORS (TABLE 1020.1): CORRIDORS SERVING MORE THAN 30 OCCUPANTS IN UNSPRINKLERED **'E'** OCCUPANCY SHALL HAVE A 1-HOUR WALL.

MINIMUM CORRIDOR WIDTH (TABLE 1020.2)**72** INCHES

EDEN ELEMENTARY ADDITION
AND
COOSA VALLEY ELEMENTARY SCHOOL ADDITION
FOR
PELL CITY SCHOOLS
PELL CITY, ALABAMA

McKEE and ASSOCIATES
ARCHITECTS, INC.
631 SOUTH HULL STREET MONTGOMERY, ALABAMA 36104 (334) 834-9933

STATE OF ALABAMA
WALTER T. McKEE, JR.
No. 1082
MONTGOMERY, ALA.
REGISTERED ARCHITECT

SHEET TITLE : COOSA VALLEY ELEM. CODE PLAN

MCKEE JOB # : 21.184

PSCA # : XXX

DRAWN BY : KDD

DATE: 06.01.2022

REVISED DATE:

REVISED DATE:

REVISED DATE:

SHEET NO. : G1.1B

- /Users/kristiediequez/ARCHITECT/McKEE ASSOCIATES/Coosa Valley Classroom Addition 21-184/~G1.1B Code Plan COOSA.dwg
- Tuesday, June 07, 2022 9:37:59 AM

GENERAL NOTES

1. THE CONTRACTOR SHALL COORDINATE WITH THE UTILITY COMPANIES CONCERNING CONFLICTS, RELOCATION, REMOVAL, AND INTERRUPTIONS OF SERVICE.
2. THE CONTRACTOR SHALL PRESERVE AND PROTECT ACCORDING TO THE INSTRUCTIONS OF THE UTILITY INVOLVED, ANY 'LIVE' UTILITIES LOCATED BY THE UTILITY COMPANY OR THE CONTRACTOR.
3. THE CONTRACTOR SHALL BE IN POSSESSION OF ALL REQUIRED PERMITS PRIOR TO ANY CONSTRUCTION BEGINNING.
4. ANY CHANGES OR REVISIONS MADE TO THE SITE PLANS SHALL BE SUBMITTED FOR APPROVAL TO THE ALABAMA BUILDING COMMISSION AND ALL OTHER PERTINENT AGENCIES
5. CONTRACTOR SHALL BE RESPONSIBLE FOR REMOVAL OF ALL DEBRIS NOT ACCEPTABLE TO THE OWNER AND ENGINEER.
6. IF CONTRACTOR DOES NOT ACCEPT EXISTING TOPOGRAPHY AS SHOWN ON THE PLANS, WITHOUT EXCEPTION, THE CONTRACTOR SHALL MAKE A TOPOGRAPHIC SURVEY AT THEIR OWN EXPENSE AND SUBMIT IT TO THE OWNER FOR REVIEW.
7. CONTRACTOR IS RESPONSIBLE FOR NOTIFYING ALL UTILITIES BEFORE CONSTRUCTION AND VERIFYING LOCATION OF ALL UTILITIES SHOWN OR NOT SHOWN.
8. CONTRACTOR IS RESPONSIBLE FOR REPAIRS OF DAMAGE TO ANY EXISTING IMPROVEMENTS DURING CONSTRUCTION, SUCH AS, BUT NOT LIMITED TO, DRAINAGE, UTILITIES, PAVEMENT, STRIPING, CURBS, SIDEWALKS ETC. REPAIRS SHALL BE EQUAL TO OR BETTER THAN EXISTING CONDITIONS.
9. UNSTABLE AND PUMPING SUBGRADE CONDITIONS MAY OCCUR DURING SITE PREPARATION AND GRADING OPERATIONS. PROPER PROTECTION OF SUBGRADE, DRAINAGE AND DE-WATERING WILL BE CRITICAL TO SITE CONSTRUCTION EFFORTS. IT SHALL BE THE RESPONSIBLY OF THE CONTRACTOR TO MINIMIZE TRAFFIC ACROSS THE SITE. EVERY EFFORT SHALL BE MADE TO LOCALIZE EQUIPMENT STAGING AND TRAFFIC TO SPECIFIC AREAS AND LIMIT THE AMOUNT OF UNDERCUTTING AND SOIL STABILIZATION THAT MY BE NEEDED. UNDERCUTTING AND OTHER REPAIRS NECESSARY BECAUSE OF THE CONTRACTOR'S FAILURE TO DO SO WILL BE MADE AT HIS EXPENSE. THE CONTRACTOR SHALL REFER TO THE GEOTECHNICAL REPORT FOR FURTHER RECOMMENDATIONS.
10. ALL GRADING OPERATIONS SHALL BE MONITORED BY A QUALIFIED GEOTECHNICAL CONSULTANT AS CHOSEN AND PAID FOR BY THE OWNER. THE CONTRACTOR SHALL BE RESPONSIBLE FOR NOTIFYING SAID CONSULTANT IN ADVANCE OF ALL REQUIRED TESTING AND SECURING COPIES OF THE RESULTING REPORTS.
11. THE CONTRACTOR SHALL PAY ALL CONNECTION COSTS AND FEES, INCLUDING BY NOT LIMITED TO, TAPPING FEES, METER COSTS AND SETTING CHARGES, AND CONNECTION CHARGES.
12. ANY EXISTING ABANDONED SANITARY SEWER LATERALS, WATER LINES, STORM SEWERS AND GAS LINES, ETC. SHALL BE CAPPED AND PLUGGED OR REMOVED AS REQUIRED BY THE APPROPRIATE UTILITY PROVIDER OR GOVERNING AGENCY, AND SHOULD BE PERFORMED PER THE RESPECTIVE ENTITY'S STANDARDS AND SPECIFICATIONS.
13. ALL SPOT ELEVATIONS ARE AT PAVEMENT EDGE, GUTTER LINE, OR GROUND LEVEL UNLESS OTHERWISE NOTED.
14. ALL DIMENSIONS SHOWN ARE TO THE FACE OF CURB, FACE OF BUILDING OR AS SHOWN IN THE PLANS.

BEST MANAGEMENT PRACTICES NOTES:

1. ALL BEST MANAGEMENT PRACTICES SHALL BE DEVELOPED AND MAINTAINED BY THE CONTRACTOR ACCORDING TO THE ALABAMA HANDBOOK FOR EROSION CONTROL, SEDIMENT CONTROL AND STORMWATER MANAGEMENT ON CONSTRUCTION SITES AND URBAN AREAS, (JULY 2018 OR MOST CURRENT) BY THE ALABAMA SOIL AND WATER CONSERVATION COMMITTEE ("BLUE BOOK"). THE CONTRACTOR SHALL BE RESPONSIBLE FOR OBTAINING AND FAMILIARIZING HIMSELF WITH THE HANDBOOK AND THE STANDARDS AND MATERIALS CONTAINED THEREIN. THE HANDBOOK MAY BE DOWNLOADED FROM THE ALABAMA SOIL & WATER CONSERVATION COMMITTEE WEBSITE (alabamasoilandwater.gov).
2. THE MAINTENANCE OF ALL BEST MANAGEMENT PRACTICES, SO AS TO BE AN EFFECTIVE BARRIER TO EROSION AND SEDIMENTATION, SHALL BE THE RESPONSIBILITY OF THE CONTRACTOR THROUGHOUT THE DURATION OF THE CONSTRUCTION PERIOD. ALL EROSION AND SEDIMENTATION CONTROL MEASURES SHALL BE INSTALLED AND MAINTAINED IN COMPLIANCE WITH ALL ADEM AND EPA BEST MANAGEMENT PRACTICES AND THE NPDES PERMIT ASSOCIATED WITH THIS SITE. THE CONTRACTOR SHALL BE RESPONSIBLE FOR THE REPAIR, REPLACEMENT, AND/OR SUPPLEMENTATION OF ANY CONTROL MEASURES THAT ARE NOT FUNCTIONING PROPERLY. ALL EROSION AND SEDIMENTATION CONTROL MEASURES SHOWN ON THE PLANS SHALL BE CONSIDERED A MINIMUM.
3. OTHER THAN LAND-CLEARING ACTIVITIES REQUIRED TO INSTALL THE APPROPRIATE BMP IN ACCORDANCE WITH THE BMP PLANS, ANY DOWN SLOPE EROSION AND SEDIMENT CONTROL MEASURES, ON-SITE STREAM CHANNEL PROTECTION AND UPSLOPE DIVERSION OF DRAINAGE REQUIRED BY THE BMP PLAN SHALL BE IN PLACE AND FUNCTIONAL BEFORE ANY CLEARING OR EARTH MOVING OPERATIONS BEGIN AND SHALL BE CONSTRUCTED AND MAINTAINED THROUGHOUT THE CONSTRUCTION PERIOD. TEMPORARY MEASURES MAY BE REMOVED AT THE BEGINNING OF THE WORKDAY, BUT SHALL BE REPLACED AT THE END OF THE WORKDAY.
4. THE ANGLE FOR GRADED SLOPES AND FILLS SHALL BE NO GREATER THAN 3:1. ANY SLOPE OR FILL WHICH HAS BEEN GRADED SHALL BE PLANTED OR OTHERWISE BE PROVIDED GROUND COVER WITHIN FOURTEEN (14) DAYS OF COMPLETION. THE DOWN GRADE BMPS SHALL REMAIN IN PLACE UNTIL THE GRADED SLOPES HAVE BEEN PERMANENTLY STABILIZED.
5. ALL CONTROL MEASURES SHALL BE CHECKED AND REPAIRED MONTHLY IN DRY PERIODS AND WITHIN 24 HOURS AFTER A QUALIFYING EVENT OF .75 INCH IN A 24 HOUR PERIOD. DURING PROLONGED RAINFALL EVENTS, DAILY INSPECTION MAY BE NECESSARY. NEEDED REPAIRS WILL BE COMPLETED IN A EXPEDIENT MANNER. THE PERMITTEE SHALL MAINTAIN WRITTEN RECORDS OF SUCH INSPECTIONS AND REPAIRS.
6. THE CONTRACTOR SHALL BE RESPONSIBLE FOR KEEPING EROSION AND SEDIMENT OFF ADJOINING PROPERTIES. AT HIS EXPENSE, THE CONTRACTOR SHALL BE RESPONSIBLE FOR THE REMOVAL OF SEDIMENTS AND DEBRIS ESCAPING THIS PROJECT SITE, THE REMEDIATION AND REPAIR THAT MAY OCCOR, AND ANY FINES OR PENALTIES LEVIED AGAINST THE PROJECT BY REGULATORY AGENCIES DUE TO DEFICIENCIES OF CONTROL MEASURES.

UTILITY OWNERS:

PELL CITY UTILITY DEPARTMENT
205.338.3886
205.365.5509 (AFTER HOURS)

SEEDING AND GRASSING NOTES:

1. SCOPE OF WORK
   GENERAL REQUIREMENTS: PROVIDE SEEDBED PREPARATION, SOIL AMENDMENTS, PLANTING, MULCHING (OR EROSION CONTROL BLANKET) IN ACCORDANCE WITH THE "BLUE BOOK" TO ALL AREAS INSIDE OR OUTSIDE THE LIMITS OF CONSTRUCTION THAT HAVE BEEN DISTURBED BY THE CONTRACTOR'S OPERATIONS.
2. MATERIALS
   LIME: 2000 POUNDS PER ACRE OF GROUND AGRICULTURAL LIME SHALL BE INCORPORATED INTO THE SOIL.

   FERTILIZER: USE 8-24-24 OR EQUIVALENT, APPLYING 400 POUNDS PER ACRE (9 LBS PER 1000 SQUARE FEET) STARTING. WHEN VEGETATION HAS EMERGED TO A STAND AND IS GROWING, APPLY 30 POUNDS PER ACRE (0.8 POUNDS PER 1000 SQUARE FEET) OF ADDITIONAL NITROGEN FERTILIZER SHALL BE APPLIED.

   SEED: DELIVER SEED TO THE SITE IN ORIGNAL SEALED PACKAGES BEARING THE PRODUCER'S GUARANTEED ANALYSIS FOR PERCENTAGES OF MIXTURE, PURITY, GERMINATION, WEEDSEED CONTENT, AND INERT MATERIAL. WET, MOLDY, OLD, OR OTHERWISE DAMAGED SEED WILL BE REJECTED.

   MULCH: SHALL BE ORGANIC MULCH SPREAD EITHER BY HAND OR MECHANICALLY AND PROVIDE 75% GROUND COVER.

   SOLID SOD: BERMUDA SOD

TEMPORARY SEEDING SPECIFICATION:

1. REFERENCE: ALDOT STANDARD SPECIFICATIONS FOR HIGHWAY CONSTRUCTION, CURRENT EDITION, SECTION 665, SECTION 860, AND OTHERS THAT APPLY.

PERMANENT SEEDING SPECIFICATION:

1. REFERENCE: ALDOT STANDARD SPECIFICATIONS FOR HIGHWAY CONSTRUCTION, CURRENT EDITION, SECTION 650, SECTION 652, SECTION 860 AND OTHERS THAT APPLY. USE ZONE 1 - AREAS SUBJECT TO FREQUENT MOWING.

SOLID SOD SPECIFICATION:

1. REFERENCE: ALDOT STANDARD SPECIFICATIONS FOR HIGHWAY CONSTRUCTION, CURRENT EDITION, SECTION 650, SECTION 652, SECTION 654, SECTION 860 AND OTHERS THAT APPLY.

EDEN ELEMENTARY ADDITION
AND
COOSA VALLEY ELEMENTARY SCHOOL ADDITION
FOR
PELL CITY SCHOOLS
PELL CITY, ALABAMA

McKEE and ASSOCIATES
ARCHITECTS, INC.
631 SOUTH HULL STREET MONTGOMERY, ALABAMA 36104 (334) 834-6933

ALABAMA REGISTERED ARCHITECT — 2022

SHEET TITLE : GENERAL NOTES

MCKEE JOB # : 21.184
PSCA # : XXX
DRAWN BY : BHD
DATE: 06.01.22
REVISED DATE:
REVISED DATE:
REVISED DATE:

SHEET NO. : C-0.1

MORELL ENGINEERING
MORELL JOB # : 22-0130

TOPOGRAPHIC SURVEY OF THE PROPOSED ADDITION TO EDEN ELEMENTARY SCHOOL PELL CITY SCHOOL SYSTEM

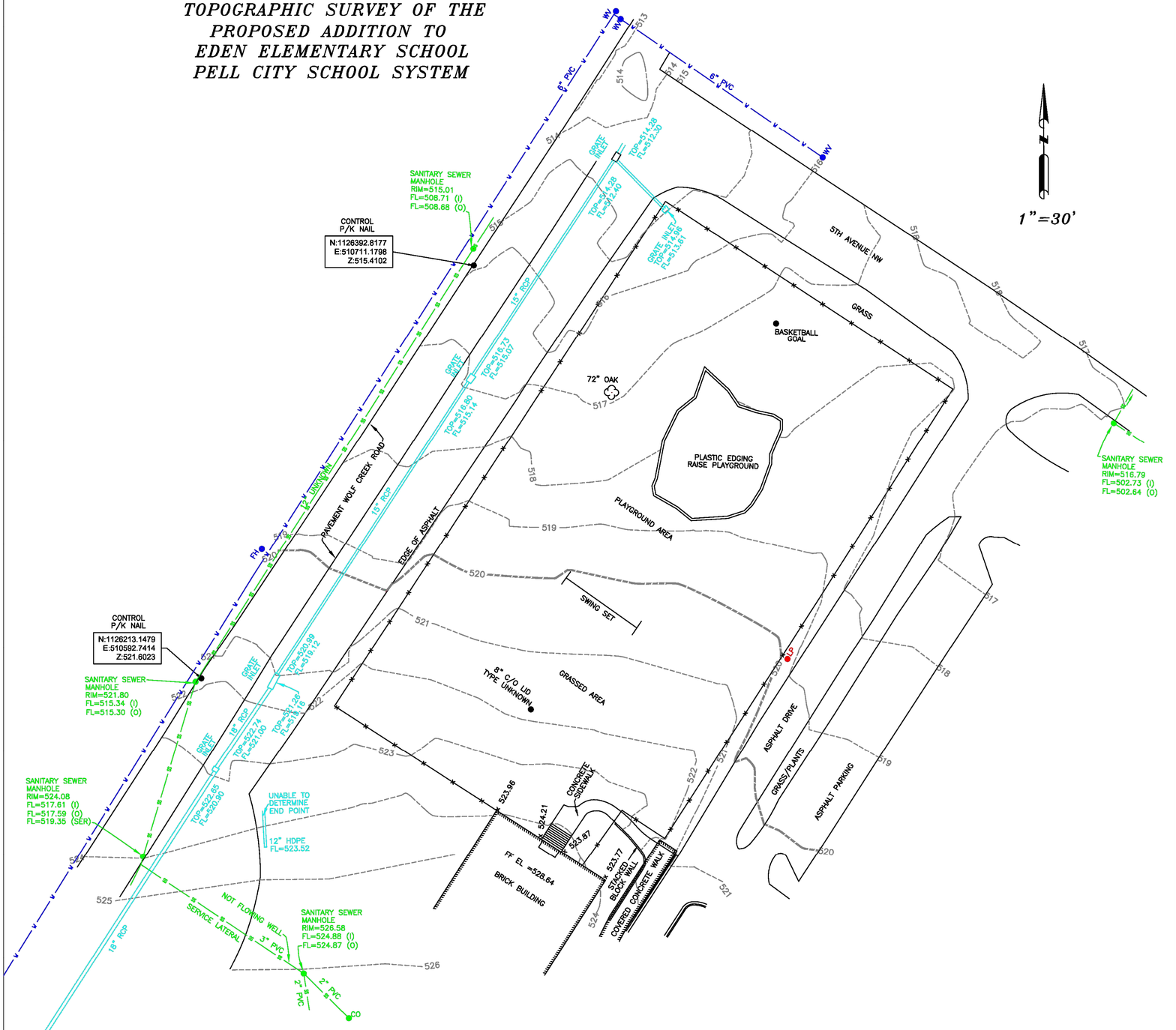

BEARINGS REFERRED TO ALABAMA EAST ZONE GRID.

ELEVATIONS BASED ON NAVD 1988 DATUM.

UTILITIES SHOWN ARE FROM ABOVE GROUND OBSERVATIONS ONLY.

NOTES:

1. LP = LIGHT POLE
2. FF = FINISHED FLOOR

THE ABOVE DOES NOT LIE IN THE SPECIAL FLOOD HAZARD AREA PER FIRM MAP 01115C0381G FOR THE CITY OF PELL CITY, ST. CLAIR COUNTY, ALABAMA DATED 8/17/2016.

STATE OF ALABAMA

ST. CLAIR COUNTY

I, Derrol D. Luker, a Licensed Professional Land Surveyor in the State of Alabama hereby certify that the above is a true and correct plat of a partial topographic survey for a proposed addition to Eden Elementary School for the Pell City Board of Education and that the above has been completed in accordance with the requirements of the Standards of Practice for surveying in the State of Alabama to the best of my information, knowledge and belief:

That said property was surveyed under my supervision on the 30th day of November 2021. This is the 1st day of December 2021.

Derrol D. Luker
License No. 23006
Luker and Company Land Surveying
CA-0587-LS

NOTES:

1. STREET ADDRESS: 412 WOLF CREEK ROAD NORTH, PELL CITY, 35125.
2. SUBJECT PARCEL DEED, DEED BOOK 2006, PAGE 6633. THE ABOVE SURVEY IS NOT TIED TO THE BOUNDARY OF SUBJECT DEED. TAX PARCEL NUMBER 23-08-34-4-001-018.000.
3. ELEVATIONS BASED ON NAVD 1988 DATUM.
4. THE ABOVE DOES NOT LIE IN THE SPECIAL FLOOD HAZARD AREA PER FIRM MAP 01115C0381G FOR THE CITY OF PELL CITY, ST. CLAIR COUNTY, ALABAMA DATED 8/16/2016.
5. NO TITLE SEARCH DONE BY THIS SURVEYOR.
6. UTILITIES SHOWN ARE FROM ABOVE GROUND OBSERVATIONS ONLY.
7.
8. THIS IS A PARTIAL TOPOGRAPHIC SURVEY FOR THE ADDITION OF NEW CLASS ROOMS FOR THE PELL CITY BOARD OF EDUCATION.

REVISIONS

ADDITIONAL TOPO ADDED AT REQUEST OF PELL CITY SCHOOL BOARD

90' 60' 30' 0'

ALABAMA LICENSED No. 23006 PROFESSIONAL LAND SURVEYOR DERROL D. LUKER

PARTIAL TOPOGRAPHIC SURVEY OF THE EDEN ELEMENTARY NEW CLASSROOM ADDITION SECTION 34, T16S, R3E IN THE CITY OF PELL CITY ST. CLAIR COUNTY, ALABAMA

DRAWN	*DATE* 12/1/2021	*LUKER AND COMPANY LAND SURVEYING*
REVISIONS		*DERROL D. LUKER*
		P.O. BOX 305
		PELL CITY, AL 35125
		(205) 338-2425
SCALE 1"=30'		lukerandco@gmail.com
		SURVEY FOR PELL CITY SCHOOL BOARD

MORELL ENGINEERING

MORELL JOB #: 22-0130

SHEET NO.: C-1.0

SHEET TITLE: EXISTING CONDITIONS

MCKEE JOB #: 21-184

PSCA #: XXX

DRAWN BY: BHD

DATE: 06.01.22

REVISED DATE:

REVISED DATE:

REVISED DATE:

EDEN ELEMENTARY ADDITION
AND
COOSA VALLEY ELEMENTARY SCHOOL ADDITION
FOR
PELL CITY SCHOOLS
PELL CITY, ALABAMA

McKEE and ASSOCIATES
ARCHITECTS, INC.
631 SOUTH HULL STREET MONTGOMERY , ALABAMA 36104 (334) 834-9933

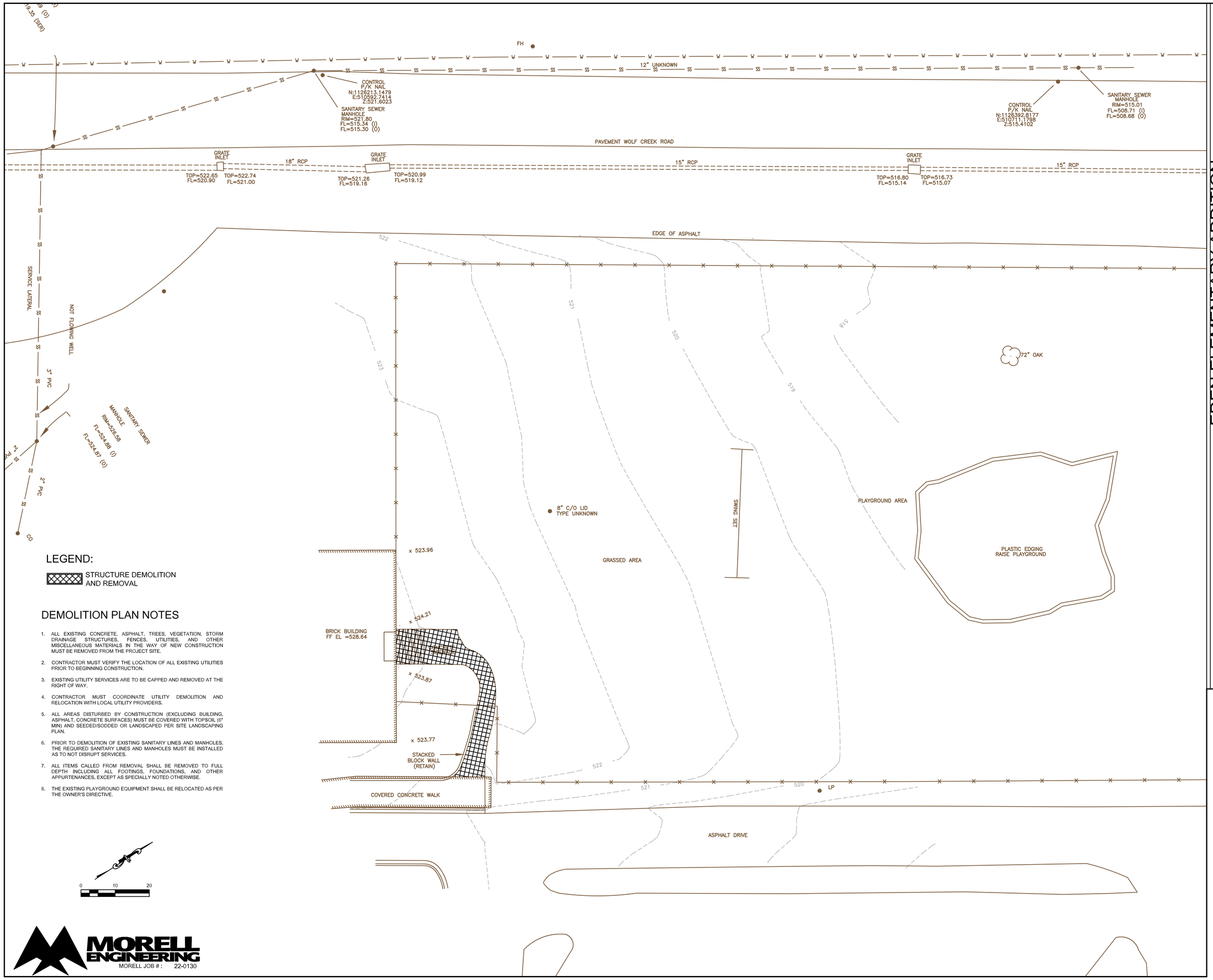

LEGEND:

STRUCTURE DEMOLITION AND REMOVAL

DEMOLITION PLAN NOTES

1. ALL EXISTING CONCRETE, ASPHALT, TREES, VEGETATION, STORM DRAINAGE STRUCTURES, FENCES, UTILITIES, AND OTHER MISCELLANEOUS MATERIALS IN THE WAY OF NEW CONSTRUCTION MUST BE REMOVED FROM THE PROJECT SITE.
2. CONTRACTOR MUST VERIFY THE LOCATION OF ALL EXISTING UTILITIES PRIOR TO BEGINNING CONSTRUCTION.
3. EXISTING UTILITY SERVICES ARE TO BE CAPPED AND REMOVED AT THE RIGHT OF WAY.
4. CONTRACTOR MUST COORDINATE UTILITY DEMOLITION AND RELOCATION WITH LOCAL UTILITY PROVIDERS.
5. ALL AREAS DISTURBED BY CONSTRUCTION (EXCLUDING BUILDING, ASPHALT, CONCRETE SURFACES) MUST BE COVERED WITH TOPSOIL (6" MIN) AND SEEDED/SODDED OR LANDSCAPED PER SITE LANDSCAPING PLAN.
6. PRIOR TO DEMOLITION OF EXISTING SANITARY LINES AND MANHOLES, THE REQUIRED SANITARY LINES AND MANHOLES MUST BE INSTALLED AS TO NOT DISRUPT SERVICES.
7. ALL ITEMS CALLED FROM REMOVAL SHALL BE REMOVED TO FULL DEPTH INCLUDING ALL FOOTINGS, FOUNDATIONS, AND OTHER APPURTENANCES, EXCEPT AS SPECIALLY NOTED OTHERWISE.
8. THE EXISTING PLAYGROUND EQUIPMENT SHALL BE RELOCATED AS PER THE OWNER'S DIRECTIVE.

MORELL ENGINEERING
MORELL JOB # : 22-0130

EDEN ELEMENTARY ADDITION
AND
COOSA VALLEY ELEMENTARY SCHOOL ADDITION
FOR
PELL CITY SCHOOLS
PELL CITY, ALABAMA

McKEE and ASSOCIATES
ARCHITECTS, INC.
631 SOUTH HULL STREET MONTGOMERY, ALABAMA 36104 (334) 834-9933

SHEET TITLE :	DEMOLITION PLAN
MCKEE JOB # :	21.184
PSCA # :	XXX
DRAWN BY :	BHD
DATE:	06.01.22
REVISED DATE:	
REVISED DATE:	
REVISED DATE:	

SHEET NO. : C-1.1

FH

12" UNKNOWN

CONTROL
P/K NAIL
N:1126213.1479
E:510592.7414
Z:521.6023

SANITARY SEWER
MANHOLE
RIM=521.80
FL=515.34 (I)
FL=515.30 (O)

CONTROL
P/K NAIL
N:1126392.8177
E:510711.1798
Z:515.4102

SANITARY SEWER
MANHOLE
RIM=515.01
FL=508.71 (I)
FL=508.68 (O)

PAVEMENT WOLF CREEK ROAD

GRATE
INLET
TOP=522.65
FL=520.90

18" RCP

GRATE
INLET
TOP=522.74
FL=521.00

GRATE
INLET
TOP=521.26
FL=519.16

15" RCP

TOP=520.99
FL=519.12

GRATE
INLET
TOP=516.80
FL=515.14

15" RCP

TOP=516.73
FL=515.07

EDGE OF ASPHALT

522

521

520

519

518

523

SERVICE LATERAL

NOT FLOWING WELL

3" PVC

2" PVC

SANITARY SEWER
MANHOLE
RIM=526.58
FL=524.88 (I)
FL=524.87 (O)

72" OAK

8" C/O LID
TYPE UNKNOWN

PLAYGROUND AREA

PLASTIC EDGING
RAISE PLAYGROUND

x 523.96

GRASSED AREA

EDEN ELEMENTARY
NEW ADDITION
(SEE ARCH. FOR SPECIFIC BUILDING
DIMENSIONS AND DETAILS)
FFE = 522.64

BRICK BUILDING
FF EL =528.64

x 524.47

x 523.87

x 523.77

STACKED
BLOCK WALL
(RETAIN)

COVERED CONCRETE WALK

LP

ASPHALT DRIVE

LEGEND:

CONCRETE SIDEWALK

0 10 20

MORELL ENGINEERING
MORELL JOB # : 22-0130

EDEN ELEMENTARY ADDITION
AND
COOSA VALLEY ELEMENTARY SCHOOL ADDITION
FOR
PELL CITY SCHOOLS
PELL CITY, ALABAMA

McKEE and ASSOCIATES
ARCHITECTS, INC.
631 SOUTH HULL STREET MONTGOMERY, ALABAMA 36104 (334) 834-9933

ALABAMA BOARD OF EXAMINERS FOR ARCHITECTS
LICENSED ARCHITECT
JAMES R. McKEE
NO. 5000
REGISTERED
2022

SHEET TITLE :	SITE PLAN
MCKEE JOB # :	21.184
PSCA # :	XXX
DRAWN BY :	BHD
DATE:	06.01.22
REVISED DATE:	
REVISED DATE:	
REVISED DATE:	

SHEET NO. : C-2.0

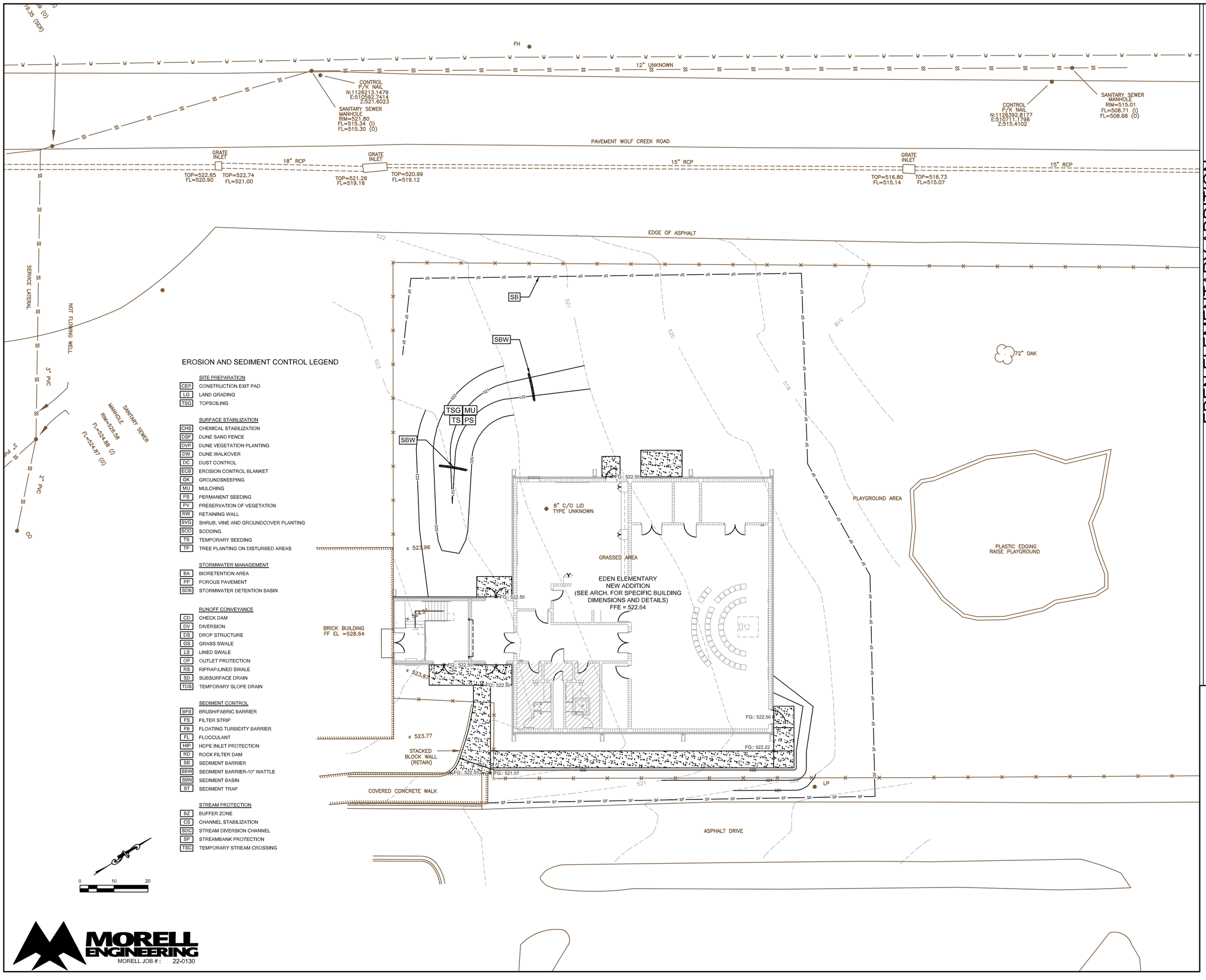

EROSION AND SEDIMENT CONTROL LEGEND

SITE PREPARATION

CEP	CONSTRUCTION EXIT PAD
LG	LAND GRADING
TSG	TOPSOILING

SURFACE STABILIZATION

CHS	CHEMICAL STABILIZATION
DSF	DUNE SAND FENCE
DVP	DUNE VEGETATION PLANTING
DW	DUNE WALKOVER
DC	DUST CONTROL
ECB	EROSION CONTROL BLANKET
GK	GROUNDSKEEPING
MU	MULCHING
PS	PERMANENT SEEDING
PV	PRESERVATION OF VEGETATION
RW	RETAINING WALL
SVG	SHRUB, VINE AND GROUNDCOVER PLANTING
SOD	SODDING
TS	TEMPORARY SEEDING
TP	TREE PLANTING ON DISTURBED AREAS

STORMWATER MANAGEMENT

BA	BIORETENTION AREA
PP	POROUS PAVEMENT
SDB	STORMWATER DETENTION BASIN

RUNOFF CONVEYANCE

CD	CHECK DAM
DV	DIVERSION
DS	DROP STRUCTURE
GS	GRASS SWALE
LS	LINED SWALE
OP	OUTLET PROTECTION
RS	RIPRAP-LINED SWALE
SD	SUBSURFACE DRAIN
TDS	TEMPORARY SLOPE DRAIN

SEDIMENT CONTROL

BFB	BRUSH/FABRIC BARRIER
FS	FILTER STRIP
FB	FLOATING TURBIDITY BARRIER
FL	FLOCCULANT
HIP	HDPE INLET PROTECTION
RD	ROCK FILTER DAM
SB	SEDIMENT BARRIER
SBW	SEDIMENT BARRIER-10" WATTLE
SBN	SEDIMENT BASIN
ST	SEDIMENT TRAP

STREAM PROTECTION

BZ	BUFFER ZONE
CS	CHANNEL STABILIZATION
SDC	STREAM DIVERSION CHANNEL
SP	STREAMBANK PROTECTION
TSC	TEMPORARY STREAM CROSSING

0 10 20

MORELL ENGINEERING
MORELL JOB # : 22-0130

EDEN ELEMENTARY ADDITION
AND
COOSA VALLEY ELEMENTARY SCHOOL ADDITION
FOR
PELL CITY SCHOOLS
PELL CITY, ALABAMA

McKEE and ASSOCIATES
ARCHITECTS, INC.
631 SOUTH HULL STREET MONTGOMERY, ALABAMA 36104 (334) 834-9933

SHEET TITLE :	GRADING & EROSION CONTROL PLAN
MCKEE JOB # :	21.184
PSCA # :	XXX
DRAWN BY :	BHD
DATE:	06.01.22
REVISED DATE:	
REVISED DATE:	
REVISED DATE:	

SHEET NO. : C-3.0

EDEN ELEMENTARY ADDITION
AND
COOSA VALLEY ELEMENTARY SCHOOL ADDITION
FOR
PELL CITY SCHOOLS
PELL CITY, ALABAMA

McKEE and ASSOCIATES
ARCHITECTS, INC.
631 SOUTH HULL STREET MONTGOMERY, ALABAMA 36104 (334) 834-9933

FH

12" UNKNOWN

CONTROL
P/K NAIL
N:1126213.1479
E:510592.7414
Z:521.6023

SANITARY SEWER
MANHOLE
RIM=521.80
FL=515.34 (I)
FL=515.30 (O)

CONTROL
P/K NAIL
N:1126392.8177
E:510711.1798
Z:515.4102

SANITARY SEWER
MANHOLE
RIM=515.01
FL=508.71 (I)
FL=508.68 (O)

PAVEMENT WOLF CREEK ROAD

GRATE INLET
TOP=522.65
FL=520.90

TOP=522.74
FL=521.00

18" RCP

GRATE INLET
TOP=521.26
FL=519.16

TOP=520.99
FL=519.12

15" RCP

GRATE INLET
TOP=516.80
FL=515.14

TOP=516.73
FL=515.07

15" RCP

REQ'D UTILITY CUT

REQ'D DIP ENCASEMENT

REQ'D UTILITY CUT

REQ'D DIP ENCASEMENT

EDGE OF ASPHALT

SERVICE LATERAL

NOT FLOWING WELL

3" PVC

SANITARY SEWER MANHOLE
RIM=526.58
FL=524.68 (I)
FL=524.67 (O)

2" PVC

CO

REQ'D 4"
C900 SANITARY LINE
@1.0% MIN SLOPE

REQ'D 2" WATERLINE

72" OAK

8" C/O LID
TYPE UNKNOWN

x 523.96

GRASSED AREA

EDEN ELEMENTARY
NEW ADDITION
(SEE ARCH. FOR SPECIFIC BUILDING
DIMENSIONS AND DETAILS)
FFE = 522.64

PLAYGROUND AREA

PLASTIC EDGING
RAISE PLAYGROUND

BRICK BUILDING
FF EL =528.64

x 524.37

x 523.87

x 523.77

STACKED
BLOCK WALL
(RETAIN)

COVERED CONCRETE WALK

LP

ASPHALT DRIVE

LEGEND:

REQUIRED ITEMS

- W — WATER LINE
- SS — SANITARY LINE
- CO — SANITARY CLEANOUT
- S — SANITARY MANHOLE
- VALVE
- MTR — WATER METER
- SEE PLUMBING DRAWINGS FOR CONITUATION

0 10 20

MORELL ENGINEERING
MORELL JOB # : 22-0130

SHEET TITLE :	UTILITY PLAN
MCKEE JOB # :	21.184
PSCA # :	XXX
DRAWN BY :	BHD
DATE:	06.01.22
REVISED DATE:	
REVISED DATE:	
REVISED DATE:	

SHEET NO. : C-4.0

NOTES:
PROVIDE 1 1/2" DEEP BY 1/8" WIDE CONTROL JOINTS EVERY 5' WITH EXPANSION JOINTS EVERY 50'.
EXPANSION MATERIAL CAN BE FILTER BOARD OR A TREATED 1x4.

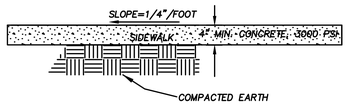

SIDEWALK DETAIL
NOT TO SCALE

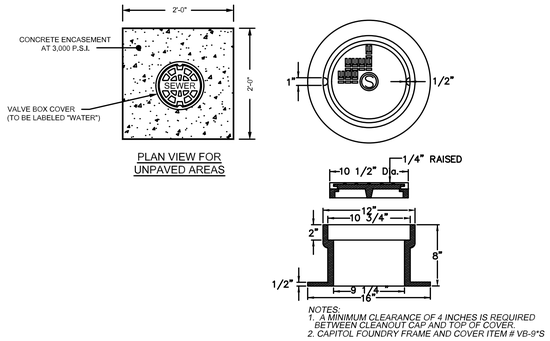

TRAFFIC BEARING CLEANOUT BOX
NOT TO SCALE

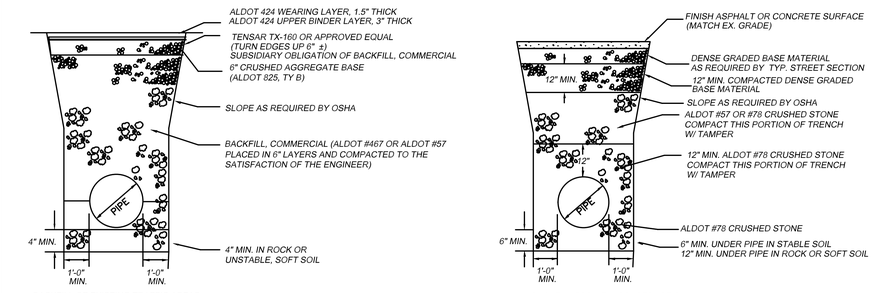

STORM AND UTILITY PIPE BEDDING
NOT TO SCALE

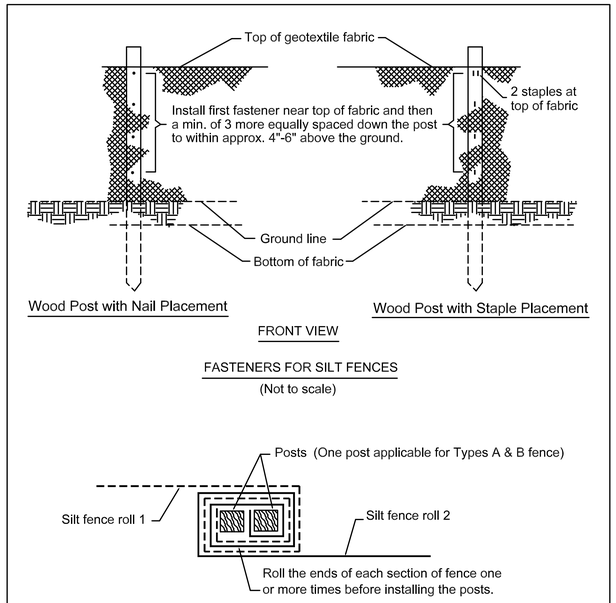

SILT FENCE INSTALLATION DETAIL
SCALE: NTS

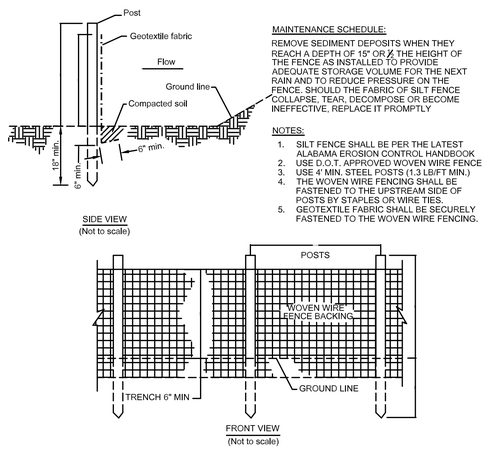

SB SILT FENCE DETAIL
SCALE: NTS

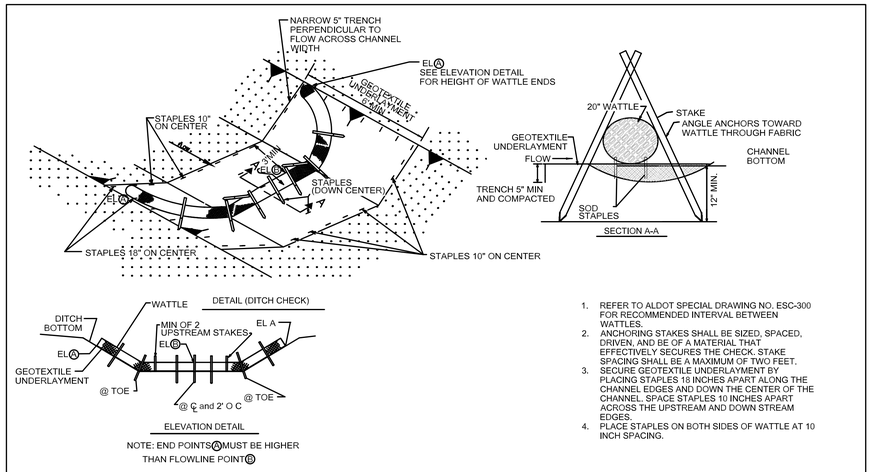

1. REFER TO ALDOT SPECIAL DRAWING NO. ESC-300 FOR RECOMMENDED INTERVAL BETWEEN WATTLES.
2. ANCHORING STAKES SHALL BE SIZED, SPACED, DRIVEN, AND BE OF A MATERIAL THAT EFFECTIVELY SECURES THE CHECK. STAKE SPACING SHALL BE A MAXIMUM OF TWO FEET.
3. SECURE GEOTEXTILE UNDERLAYMENT BY PLACING STAPLES 18 INCHES APART ALONG THE CHANNEL EDGES AND DOWN THE CENTER OF THE CHANNEL, SPACE STAPLES 10 INCHES APART ACROSS THE UPSTREAM AND DOWN STREAM EDGES.
4. PLACE STAPLES ON BOTH SIDES OF WATTLE AT 10 INCH SPACING.

SBW SEDIMENT BARRIER WATTLE
SCALE: NTS

EDEN ELEMENTARY ADDITION
AND
COOSA VALLEY ELEMENTARY SCHOOL ADDITION
FOR
PELL CITY SCHOOLS
PELL CITY, ALABAMA

McKEE and ASSOCIATES
ARCHITECTS, INC.
631 SOUTH HULL STREET MONTGOMERY, ALABAMA 36104 (334) 834-9933

STATE OF ALABAMA
REGISTERED
KYLE NEIL HOLLAND
PROFESSIONAL ENGINEER
2022

SHEET TITLE : STANDARD DETAILS

MCKEE JOB # : 21.184
PSCA # : XXX
DRAWN BY : BHD
DATE: 06.01.22
REVISED DATE:
REVISED DATE:
REVISED DATE:

SHEET NO. : C-5.0

MORELL ENGINEERING
MORELL JOB # : 22-0130

GENERAL NOTES

1. THE CONTRACTOR SHALL COORDINATE WITH THE UTILITY COMPANIES CONCERNING CONFLICTS, RELOCATION, REMOVAL, AND INTERRUPTIONS OF SERVICE.
2. THE CONTRACTOR SHALL PRESERVE AND PROTECT ACCORDING TO THE INSTRUCTIONS OF THE UTILITY INVOLVED, ANY 'LIVE' UTILITIES LOCATED BY THE UTILITY COMPANY OR THE CONTRACTOR.
3. THE CONTRACTOR SHALL BE IN POSSESSION OF ALL REQUIRED PERMITS PRIOR TO ANY CONSTRUCTION BEGINNING.
4. ANY CHANGES OR REVISIONS MADE TO THE SITE PLANS SHALL BE SUBMITTED FOR APPROVAL TO THE ALABAMA BUILDING COMMISSION AND ALL OTHER PERTINENT AGENCIES
5. CONTRACTOR SHALL BE RESPONSIBLE FOR REMOVAL OF ALL DEBRIS NOT ACCEPTABLE TO THE OWNER AND ENGINEER.
6. IF CONTRACTOR DOES NOT ACCEPT EXISTING TOPOGRAPHY AS SHOWN ON THE PLANS, WITHOUT EXCEPTION, THE CONTRACTOR SHALL MAKE A TOPOGRAPHIC SURVEY AT THEIR OWN EXPENSE AND SUBMIT IT TO THE OWNER FOR REVIEW.
7. CONTRACTOR IS RESPONSIBLE FOR NOTIFYING ALL UTILITIES BEFORE CONSTRUCTION AND VERIFYING LOCATION OF ALL UTILITIES SHOWN OR NOT SHOWN.
8. CONTRACTOR IS RESPONSIBLE FOR REPAIRS OF DAMAGE TO ANY EXISTING IMPROVEMENTS DURING CONSTRUCTION, SUCH AS, BUT NOT LIMITED TO, DRAINAGE, UTILITIES, PAVEMENT, STRIPING, CURBS, SIDEWALKS ETC. REPAIRS SHALL BE EQUAL TO OR BETTER THAN EXISTING CONDITIONS.
9. UNSTABLE AND PUMPING SUBGRADE CONDITIONS MAY OCCUR DURING SITE PREPARATION AND GRADING OPERATIONS. PROPER PROTECTION OF SUBGRADE, DRAINAGE AND DE-WATERING WILL BE CRITICAL TO SITE CONSTRUCTION EFFORTS. IT SHALL BE THE RESPONSIBLY OF THE CONTRACTOR TO MINIMIZE TRAFFIC ACROSS THE SITE. EVERY EFFORT SHALL BE MADE TO LOCALIZE EQUIPMENT STAGING AND TRAFFIC TO SPECIFIC AREAS AND LIMIT THE AMOUNT OF UNDERCUTTING AND SOIL STABILIZATION THAT MY BE NEEDED. UNDERCUTTING AND OTHER REPAIRS NECESSARY BECAUSE OF THE CONTRACTOR'S FAILURE TO DO SO WILL BE MADE AT HIS EXPENSE. THE CONTRACTOR SHALL REFER TO THE GEOTECHNICAL REPORT FOR FURTHER RECOMMENDATIONS.
10. ALL GRADING OPERATIONS SHALL BE MONITORED BY A QUALIFIED GEOTECHNICAL CONSULTANT AS CHOSEN AND PAID FOR BY THE OWNER. THE CONTRACTOR SHALL BE RESPONSIBLE FOR NOTIFYING SAID CONSULTANT IN ADVANCE OF ALL REQUIRED TESTING AND SECURING COPIES OF THE RESULTING REPORTS.
11. THE CONTRACTOR SHALL PAY ALL CONNECTION COSTS AND FEES, INCLUDING BY NOT LIMITED TO, TAPPING FEES, METER COSTS AND SETTING CHARGES, AND CONNECTION CHARGES.
12. ANY EXISTING ABANDONED SANITARY SEWER LATERALS, WATER LINES, STORM SEWERS AND GAS LINES, ETC. SHALL BE CAPPED AND PLUGGED OR REMOVED AS REQUIRED BY THE APPROPRIATE UTILITY PROVIDER OR GOVERNING AGENCY, AND SHOULD BE PERFORMED PER THE RESPECTIVE ENTITY'S STANDARDS AND SPECIFICATIONS.
13. ALL SPOT ELEVATIONS ARE AT PAVEMENT EDGE, GUTTER LINE, OR GROUND LEVEL UNLESS OTHERWISE NOTED.
14. ALL DIMENSIONS SHOWN ARE TO THE FACE OF CURB, FACE OF BUILDING OR AS SHOWN IN THE PLANS.

BEST MANAGEMENT PRACTICES NOTES:

1. ALL BEST MANAGEMENT PRACTICES SHALL BE DEVELOPED AND MAINTAINED BY THE CONTRACTOR ACCORDING TO THE ALABAMA HANDBOOK FOR EROSION CONTROL, SEDIMENT CONTROL AND STORMWATER MANAGEMENT ON CONSTRUCTION SITES AND URBAN AREAS, (JULY 2018 OR MOST CURRENT) BY THE ALABAMA SOIL AND WATER CONSERVATION COMMITTEE ("BLUE BOOK"). THE CONTRACTOR SHALL BE RESPONSIBLE FOR OBTAINING AND FAMILIARIZING HIMSELF WITH THE HANDBOOK AND THE STANDARDS AND MATERIALS CONTAINED THEREIN. THE HANDBOOK MAY BE DOWNLOADED FROM THE ALABAMA SOIL & WATER CONSERVATION COMMITTEE WEBSITE (alabamasoilandwater.gov).
2. THE MAINTENANCE OF ALL BEST MANAGEMENT PRACTICES, SO AS TO BE AN EFFECTIVE BARRIER TO EROSION AND SEDIMENTATION, SHALL BE THE RESPONSIBILITY OF THE CONTRACTOR THROUGHOUT THE DURATION OF THE CONSTRUCTION PERIOD. ALL EROSION AND SEDIMENTATION CONTROL MEASURES SHALL BE INSTALLED AND MAINTAINED IN COMPLIANCE WITH ALL ADEM AND EPA BEST MANAGEMENT PRACTICES AND THE NPDES PERMIT ASSOCIATED WITH THIS SITE. THE CONTRACTOR SHALL BE RESPONSIBLE FOR THE REPAIR, REPLACEMENT, AND/OR SUPPLEMENTATION OF ANY CONTROL MEASURES THAT ARE NOT FUNCTIONING PROPERLY. ALL EROSION AND SEDIMENTATION CONTROL MEASURES SHOWN ON THE PLANS SHALL BE CONSIDERED A MINIMUM.
3. OTHER THAN LAND-CLEARING ACTIVITIES REQUIRED TO INSTALL THE APPROPRIATE BMP IN ACCORDANCE WITH THE BMP PLANS, ANY DOWN SLOPE EROSION AND SEDIMENT CONTROL MEASURES, ON-SITE STREAM CHANNEL PROTECTION AND UPSLOPE DIVERSION OF DRAINAGE REQUIRED BY THE BMP PLAN SHALL BE IN PLACE AND FUNCTIONAL BEFORE ANY CLEARING OR EARTH MOVING OPERATIONS BEGIN AND SHALL BE CONSTRUCTED AND MAINTAINED THROUGHOUT THE CONSTRUCTION PERIOD. TEMPORARY MEASURES MAY BE REMOVED AT THE BEGINNING OF THE WORKDAY, BUT SHALL BE REPLACED AT THE END OF THE WORKDAY.
4. THE ANGLE FOR GRADED SLOPES AND FILLS SHALL BE NO GREATER THAN 3:1. ANY SLOPE OR FILL WHICH HAS BEEN GRADED SHALL BE PLANTED OR OTHERWISE BE PROVIDED GROUND COVER WITHIN FOURTEEN (14) DAYS OF COMPLETION. THE DOWN GRADE BMPS SHALL REMAIN IN PLACE UNTIL THE GRADED SLOPES HAVE BEEN PERMANENTLY STABILIZED.
5. ALL CONTROL MEASURES SHALL BE CHECKED AND REPAIRED MONTHLY IN DRY PERIODS AND WITHIN 24 HOURS AFTER A QUALIFYING EVENT OF .75 INCH IN A 24 HOUR PERIOD. DURING PROLONGED RAINFALL EVENTS, DAILY INSPECTION MAY BE NECESSARY. NEEDED REPAIRS WILL BE COMPLETED IN A EXPEDIENT MANNER. THE PERMITTEE SHALL MAINTAIN WRITTEN RECORDS OF SUCH INSPECTIONS AND REPAIRS.
6. THE CONTRACTOR SHALL BE RESPONSIBLE FOR KEEPING EROSION AND SEDIMENT OFF ADJOINING PROPERTIES. AT HIS EXPENSE, THE CONTRACTOR SHALL BE RESPONSIBLE FOR THE REMOVAL OF SEDIMENTS AND DEBRIS ESCAPING THIS PROJECT SITE, THE REMEDIATION AND REPAIR THAT MAY OCCOR, AND ANY FINES OR PENALTIES LEVIED AGAINST THE PROJECT BY REGULATORY AGENCIES DUE TO DEFICIENCIES OF CONTROL MEASURES.

UTILITY OWNERS:

PELL CITY UTILITY DEPARTMENT
205.338.3886
205.365.5509 (AFTER HOURS)

SEEDING AND GRASSING NOTES:

1. SCOPE OF WORK
   GENERAL REQUIREMENTS: PROVIDE SEEDBED PREPARATION, SOIL AMENDMENTS, PLANTING, MULCHING (OR EROSION CONTROL BLANKET) IN ACCORDANCE WITH THE "BLUE BOOK" TO ALL AREAS INSIDE OR OUTSIDE THE LIMITS OF CONSTRUCTION THAT HAVE BEEN DISTURBED BY THE CONTRACTOR'S OPERATIONS.
2. MATERIALS
   LIME: 2000 POUNDS PER ACRE OF GROUND AGRICULTURAL LIME SHALL BE INCORPORATED INTO THE SOIL.

   FERTILIZER: USE 8-24-24 OR EQUIVALENT, APPLYING 400 POUNDS PER ACRE (9 LBS PER 1000 SQUARE FEET) STARTING. WHEN VEGETATION HAS EMERGED TO A STAND AND IS GROWING, APPLY 30 POUNDS PER ACRE (0.8 POUNDS PER 1000 SQUARE FEET) OF ADDITIONAL NITROGEN FERTILIZER SHALL BE APPLIED.

   SEED: DELIVER SEED TO THE SITE IN ORIGNAL SEALED PACKAGES BEARING THE PRODUCER'S GUARANTEED ANALYSIS FOR PERCENTAGES OF MIXTURE, PURITY, GERMINATION, WEEDSEED CONTENT, AND INERT MATERIAL. WET, MOLDY, OLD, OR OTHERWISE DAMAGED SEED WILL BE REJECTED.

   MULCH: SHALL BE ORGANIC MULCH SPREAD EITHER BY HAND OR MECHANICALLY AND PROVIDE 75% GROUND COVER.

   SOLID SOD: BERMUDA SOD

TEMPORARY SEEDING SPECIFICATION:

1. REFERENCE: ALDOT STANDARD SPECIFICATIONS FOR HIGHWAY CONSTRUCTION, CURRENT EDITION, SECTION 665, SECTION 860, AND OTHERS THAT APPLY.

PERMANENT SEEDING SPECIFICATION:

1. REFERENCE: ALDOT STANDARD SPECIFICATIONS FOR HIGHWAY CONSTRUCTION, CURRENT EDITION, SECTION 650, SECTION 652, SECTION 860 AND OTHERS THAT APPLY. USE ZONE 1 - AREAS SUBJECT TO FREQUENT MOWING.

SOLID SOD SPECIFICATION:

1. REFERENCE: ALDOT STANDARD SPECIFICATIONS FOR HIGHWAY CONSTRUCTION, CURRENT EDITION, SECTION 650, SECTION 652, SECTION 654, SECTION 860 AND OTHERS THAT APPLY.

EDEN ELEMENTARY ADDITION
AND
COOSA VALLEY ELEMENTARY SCHOOL ADDITION
FOR
PELL CITY SCHOOLS
PELL CITY, ALABAMA

McKEE and ASSOCIATES
ARCHITECTS, INC.
631 SOUTH HULL STREET MONTGOMERY, ALABAMA 36104 (334) 834-6933

ALABAMA REGISTERED ARCHITECT — 2022

SHEET TITLE : GENERAL NOTES

MCKEE JOB # : 21.184
PSCA # : XXX
DRAWN BY : BHD
DATE: 06.01.22
REVISED DATE:
REVISED DATE:
REVISED DATE:

SHEET NO. : C-0.1

MORELL ENGINEERING
MORELL JOB # : 22-0130

MORELL ENGINEERING

MORELL JOB #: 22-0130

TOPOGRAPHIC SURVEY OF THE PROPOSED ADDITION TO COOSA VALLEY ELEMENTARY SCHOOL PELL CITY SCHOOL SYSTEM

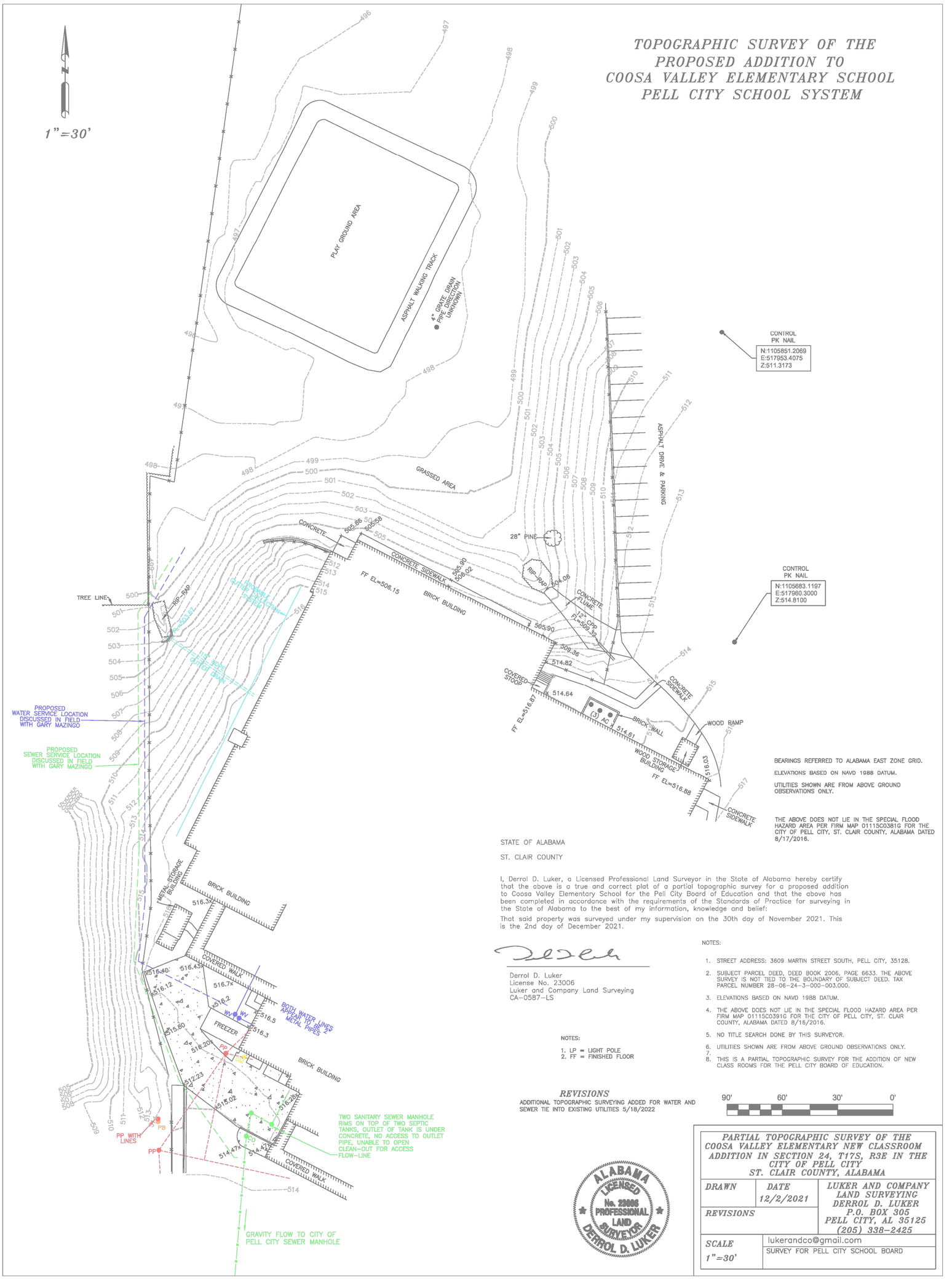

BEARINGS REFERRED TO ALABAMA EAST ZONE GRID.

ELEVATIONS BASED ON NAVD 1988 DATUM.

UTILITIES SHOWN ARE FROM ABOVE GROUND OBSERVATIONS ONLY.

THE ABOVE DOES NOT LIE IN THE SPECIAL FLOOD HAZARD AREA PER FIRM MAP 01115C0381G FOR THE CITY OF PELL CITY, ST. CLAIR COUNTY, ALABAMA DATED 8/17/2016.

STATE OF ALABAMA

ST. CLAIR COUNTY

I, Derrol D. Luker, a Licensed Professional Land Surveyor in the State of Alabama hereby certify that the above is a true and correct plat of a partial topographic survey for a proposed addition to Coosa Valley Elementary School for the Pell City Board of Education and that the above has been completed in accordance with the requirements of the Standards of Practice for surveying in the State of Alabama to the best of my information, knowledge and belief:

That said property was surveyed under my supervision on the 30th day of November 2021. This is the 2nd day of December 2021.

Derrol D. Luker
License No. 23006
Luker and Company Land Surveying
CA-0587-LS

NOTES:

1. LP = LIGHT POLE
2. FF = FINISHED FLOOR

NOTES:

1. STREET ADDRESS: 3609 MARTIN STREET SOUTH, PELL CITY, 35128.
2. SUBJECT PARCEL DEED, DEED BOOK 2006, PAGE 6633. THE ABOVE SURVEY IS NOT TIED TO THE BOUNDARY OF SUBJECT DEED. TAX PARCEL NUMBER 28-06-24-3-000-003.000.
3. ELEVATIONS BASED ON NAVD 1988 DATUM.
4. THE ABOVE DOES NOT LIE IN THE SPECIAL FLOOD HAZARD AREA PER FIRM MAP 01115C0391G FOR THE CITY OF PELL CITY, ST. CLAIR COUNTY, ALABAMA DATED 8/16/2016.
5. NO TITLE SEARCH DONE BY THIS SURVEYOR.
6. UTILITIES SHOWN ARE FROM ABOVE GROUND OBSERVATIONS ONLY.
7.
8. THIS IS A PARTIAL TOPOGRAPHIC SURVEY FOR THE ADDITION OF NEW CLASS ROOMS FOR THE PELL CITY BOARD OF EDUCATION.

REVISIONS

ADDITIONAL TOPOGRAPHIC SURVEYING ADDED FOR WATER AND SEWER TIE INTO EXISTING UTILITIES 5/18/2022

90' 60' 30' 0'

ALABAMA LICENSED No. 23006 PROFESSIONAL LAND SURVEYOR DERROL D. LUKER

PARTIAL TOPOGRAPHIC SURVEY OF THE COOSA VALLEY ELEMENTARY NEW CLASSROOM ADDITION IN SECTION 24, T17S, R3E IN THE CITY OF PELL CITY ST. CLAIR COUNTY, ALABAMA

DRAWN	DATE 12/2/2021	LUKER AND COMPANY LAND SURVEYING DERROL D. LUKER P.O. BOX 305 PELL CITY, AL 35125 (205) 338-2425
REVISIONS		
SCALE 1"=30'		lukerandco@gmail.com
		SURVEY FOR PELL CITY SCHOOL BOARD

SHEET NO.: C-1.0

SHEET TITLE: EXISTING CONDITIONS

MCKEE JOB #: 21.184

PSCA #: XXX

DRAWN BY: BHD

DATE: 06.01.22

REVISED DATE:

REVISED DATE:

REVISED DATE:

EDEN ELEMENTARY ADDITION

AND

COOSA VALLEY ELEMENTARY SCHOOL ADDITION

FOR

PELL CITY SCHOOLS

PELL CITY, ALABAMA

McKEE and ASSOCIATES
ARCHITECTS, INC.
631 SOUTH HULL STREET MONTGOMERY , ALABAMA 36104 (334) 834-9933

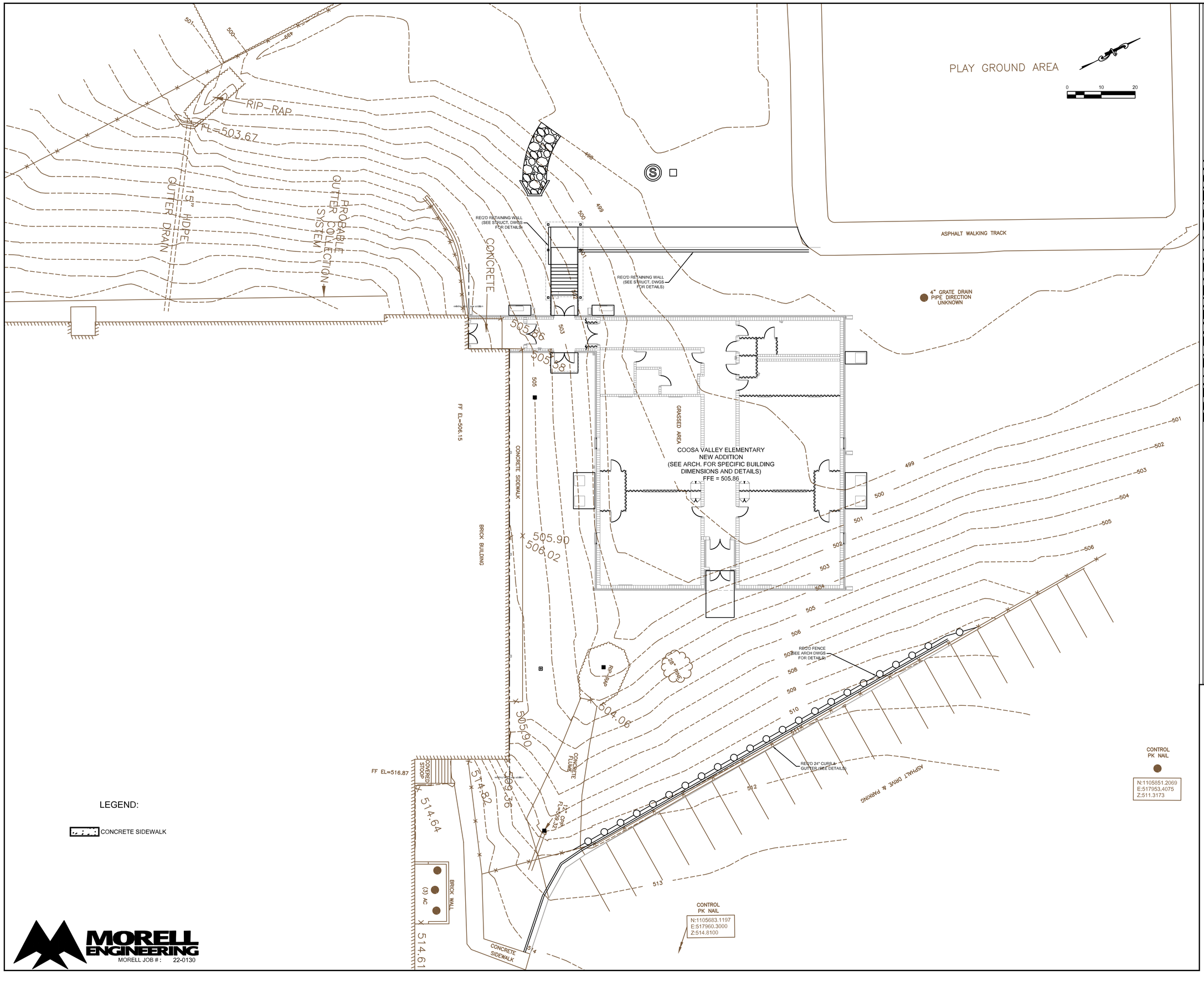

MORELL ENGINEERING
MORELL JOB # : 22-0130

EDEN ELEMENTARY ADDITION
AND
COOSA VALLEY ELEMENTARY SCHOOL ADDITION
FOR
PELL CITY SCHOOLS
PELL CITY, ALABAMA

McKEE and ASSOCIATES
ARCHITECTS, INC.
631 SOUTH HULL STREET MONTGOMERY, ALABAMA 36104 (334) 834-9933

SHEET TITLE :	SITE PLAN
MCKEE JOB # :	21.184
PSCA # :	XXX
DRAWN BY :	BHD
DATE:	06.01.22
REVISED DATE:	
REVISED DATE:	
REVISED DATE:	

SHEET NO. : C-2.0

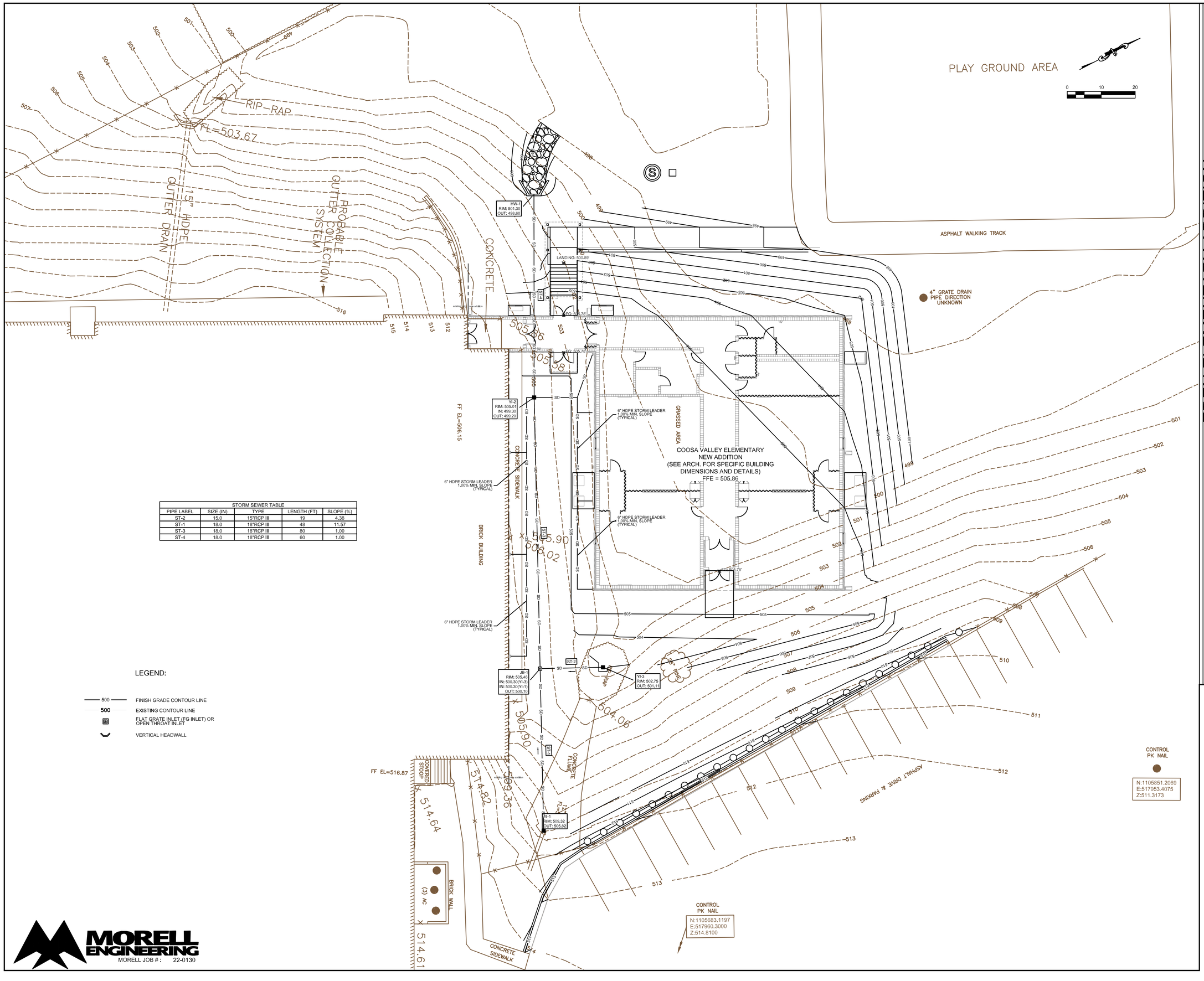

STORM SEWER TABLE				
PIPE LABEL	SIZE (IN)	TYPE	LENGTH (FT)	SLOPE (%)
ST-2	15.0	15"RCP III	19	4.38
ST-1	18.0	18"RCP III	48	11.57
ST-3	18.0	18"RCP III	80	1.00
ST-4	18.0	18"RCP III	60	1.00

MORELL ENGINEERING
MORELL JOB # : 22-0130

EDEN ELEMENTARY ADDITION
AND
COOSA VALLEY ELEMENTARY SCHOOL ADDITION
FOR
PELL CITY SCHOOLS
PELL CITY, ALABAMA

McKEE and ASSOCIATES
ARCHITECTS, INC.
631 SOUTH HULL STREET MONTGOMERY, ALABAMA 36104 (334) 834-9933

SHEET TITLE :	SITE GRADING & DRAINAGE PLAN
MCKEE JOB # :	21.184
PSCA # :	XXX
DRAWN BY :	BHD
DATE:	06.01.22
REVISED DATE:	
REVISED DATE:	
REVISED DATE:	

SHEET NO. : C-3.0

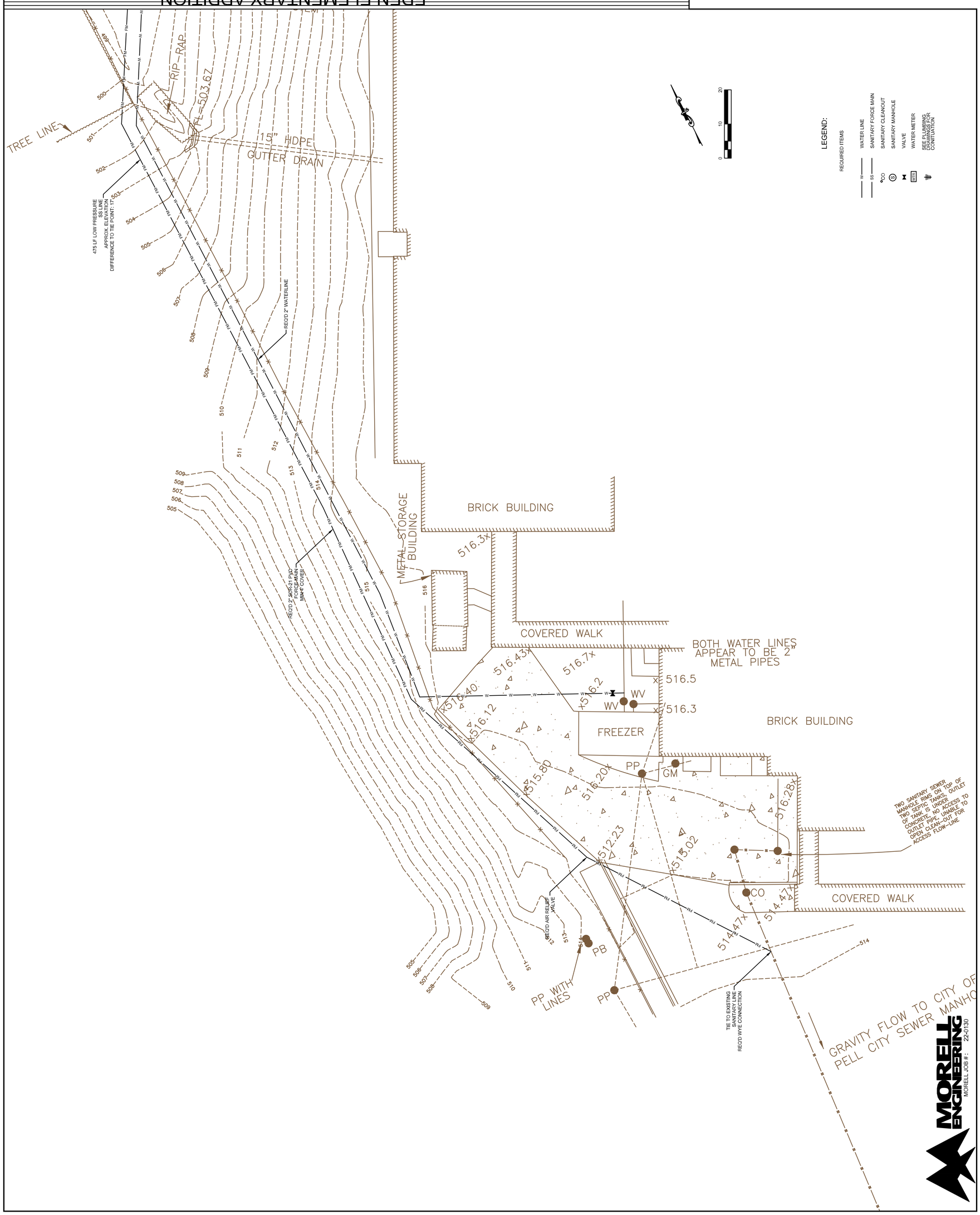

EDEN ELEMENTARY ADDITION
AND
COOSA VALLEY ELEMENTARY SCHOOL ADDITION
FOR
PELL CITY SCHOOLS
PELL CITY, ALABAMA
McKEE and ASSOCIATES
ARCHITECTS, INC.
631 SOUTH HULL STREET MONTGOMERY, ALABAMA 36104 (334) 834-9933
SHEET TITLE: UTILITY PLAN
MCKEE JOB #: 21.184
PSCA #: XXX
DRAWN BY: BHD
DATE: 06.01.22
REVISED DATE:
REVISED DATE:
REVISED DATE:
SHEET NO.: C-4.0
LEGEND:
REQUIRED ITEMS
WATER LINE
SANITARY FORCE MAIN
SANITARY CLEANOUT
SANITARY MANHOLE
VALVE
WATER METER
SEE PLUMBING DRAWINGS FOR CONTUATION
TREE LINE
RIP-RAP
FL=503.67
15" HDPE GUTTER DRAIN
475 LF LOW PRESSURE SS LINE
APPROX. ELEVATION DIFFERENCE TO TIE POINT: 17'
REQ'D 2" WATERLINE
REQ'D 2" SDR-21 PVC FORCE MAIN MIN 4' COVER
METAL STORAGE BUILDING
BRICK BUILDING
COVERED WALK
BOTH WATER LINES APPEAR TO BE 2" METAL PIPES
FREEZER
BRICK BUILDING
COVERED WALK
TWO SANITARY SEWER MANHOLE RIMS ON TOP OF TWO SEPTIC TANKS, OUTLET OF TANK IS UNDER CONCRETE, NO ACCESS TO OUTLET PIPE, UNABLE TO OPEN CLEAN-OUT FOR ACCESS FLOW-LINE
REQ'D AIR RELIEF VALVE
PP WITH LINES
TIE TO EXISTING SANITARY LINE
REQ'D WYE CONNECTION
GRAVITY FLOW TO CITY OF PELL CITY SEWER MANHO
MORELL ENGINEERING
MORELL JOB #: 22-0130

475 LF LOW PRESSURE SS LINE
APPROX. ELEVATION DIFFERENCE TO TIE POINT: 17'

REQ'D 2" SDR-21 PVC FORCE MAIN MIN 4' COVER

REQ'D 2" WATERLINE

REQ'D EONE WH 472 DUPLEX SANITARY LIFT STATION AND CONTROL PANEL
INV IN: 497.68'
INV OUT: 493.40'
(SEE SHEET C-6.1 FOR DETAILS)

REQ'D 4" SCH-40 PVC SANITARY LINE

REQ'D UNDERGROUND SERVICE

PLAY GROUND AREA

0 10 20

ASPHALT WALKING TRACK

4" GRATE DRAIN PIPE DIRECTION UNKNOWN

RIP-RAP

FL=503.67

15" HDPE GUTTER DRAIN

PROBABLE GUTTER COLLECTION SYSTEM

CONCRETE

LANDING: 500.89'

REQ: 505.78'

505.86

505.98

GRASSED AREA

COOSA VALLEY ELEMENTARY
NEW ADDITION
(SEE ARCH. FOR SPECIFIC BUILDING DIMENSIONS AND DETAILS)
FFE = 505.86

FF EL=506.15

CONCRETE SIDEWALK

BRICK BUILDING

505.90

506.02

504.06

505.90

FF EL=516.87

COVERED STOOP

514.82

509.36

514.64

514.61

CONCRETE FLUME

12" DIP FL=509.32

ASPHALT DRIVE & PARKING

BRICK WALL

(3) AC

CONCRETE SIDEWALK

CONTROL PK NAIL
N:1105683.1197
E:517960.3000
Z:514.8100

CONTROL PK NAIL
N:1105851.2069
E:517953.4075
Z:511.3173

LEGEND:

REQUIRED ITEMS

- W — WATER LINE
- SS — SANITARY FORCE MAIN
- CO — SANITARY CLEANOUT
- S — SANITARY MANHOLE
- VALVE
- MTR — WATER METER
- SEE PLUMBING DRAWINGS FOR CONITUATION

MORELL ENGINEERING
MORELL JOB # : 22-0130

EDEN ELEMENTARY ADDITION
AND
COOSA VALLEY ELEMENTARY SCHOOL ADDITION
FOR
PELL CITY SCHOOLS
PELL CITY, ALABAMA

McKEE and ASSOCIATES
ARCHITECTS, INC.
631 SOUTH HULL STREET MONTGOMERY, ALABAMA 36104 (334) 834-6933

ALABAMA LICENSED ARCHITECT
JOSEPH E. BOHANAN
06/01/2022

SHEET TITLE : UTILITY PLAN

MCKEE JOB # : 21.184

PSCA # : XXX

DRAWN BY : BHD

DATE: 06.01.22

REVISED DATE:

REVISED DATE:

REVISED DATE:

SHEET NO. : C-4.1

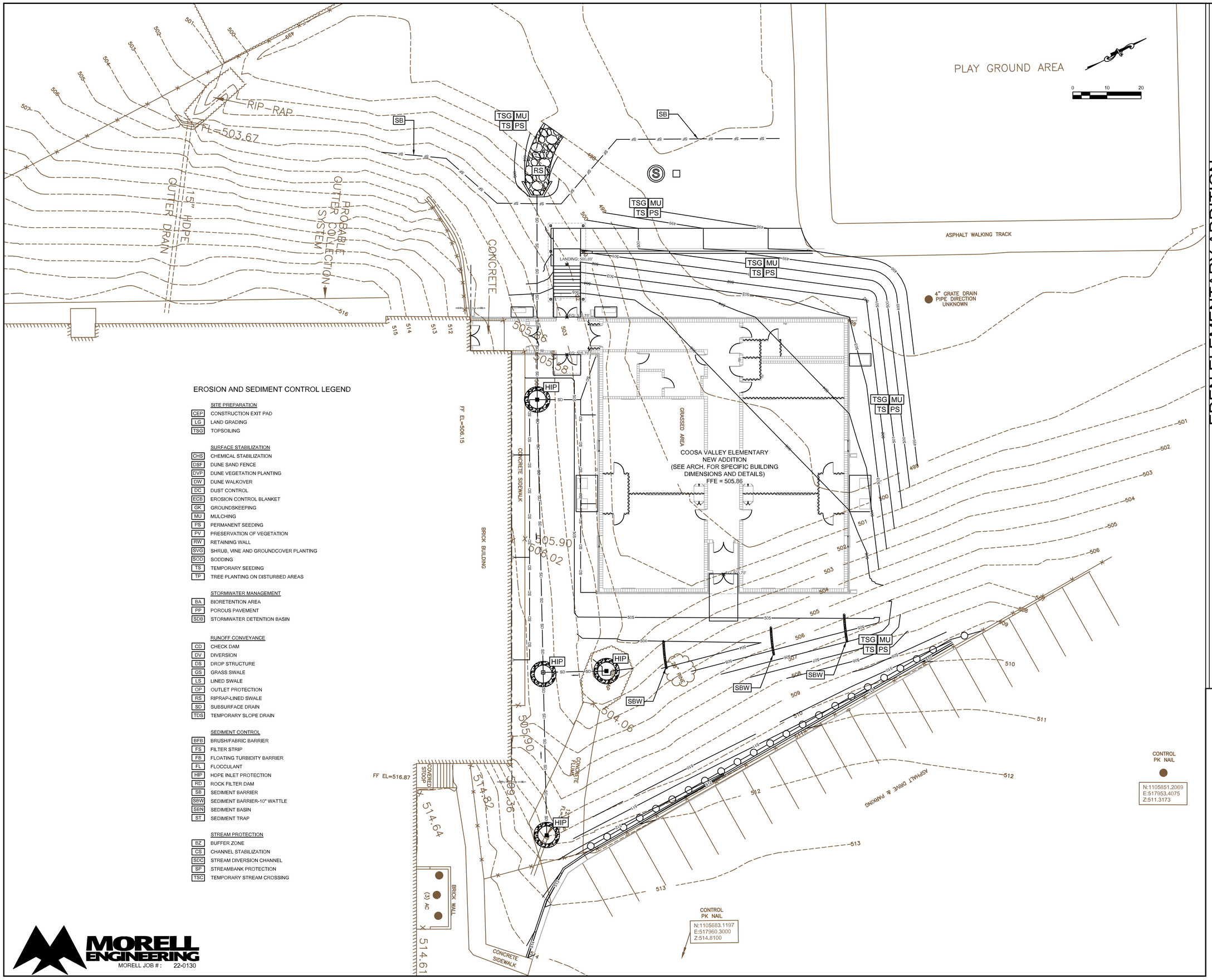

EROSION AND SEDIMENT CONTROL LEGEND

SITE PREPARATION

- CEP — CONSTRUCTION EXIT PAD
- LG — LAND GRADING
- TSG — TOPSOILING

SURFACE STABILIZATION

- CHS — CHEMICAL STABILIZATION
- DSF — DUNE SAND FENCE
- DVP — DUNE VEGETATION PLANTING
- DW — DUNE WALKOVER
- DC — DUST CONTROL
- ECB — EROSION CONTROL BLANKET
- GK — GROUNDSKEEPING
- MU — MULCHING
- PS — PERMANENT SEEDING
- PV — PRESERVATION OF VEGETATION
- RW — RETAINING WALL
- SVG — SHRUB, VINE AND GROUNDCOVER PLANTING
- SOD — SODDING
- TS — TEMPORARY SEEDING
- TP — TREE PLANTING ON DISTURBED AREAS

STORMWATER MANAGEMENT

- BA — BIORETENTION AREA
- PP — POROUS PAVEMENT
- SDB — STORMWATER DETENTION BASIN

RUNOFF CONVEYANCE

- CD — CHECK DAM
- DV — DIVERSION
- DS — DROP STRUCTURE
- GS — GRASS SWALE
- LS — LINED SWALE
- OP — OUTLET PROTECTION
- RS — RIPRAP-LINED SWALE
- SD — SUBSURFACE DRAIN
- TDS — TEMPORARY SLOPE DRAIN

SEDIMENT CONTROL

- BFB — BRUSH/FABRIC BARRIER
- FS — FILTER STRIP
- FB — FLOATING TURBIDITY BARRIER
- FL — FLOCCULANT
- HIP — HDPE INLET PROTECTION
- RD — ROCK FILTER DAM
- SB — SEDIMENT BARRIER
- SBW — SEDIMENT BARRIER-10" WATTLE
- SBN — SEDIMENT BASIN
- ST — SEDIMENT TRAP

STREAM PROTECTION

- BZ — BUFFER ZONE
- CS — CHANNEL STABILIZATION
- SDC — STREAM DIVERSION CHANNEL
- SP — STREAMBANK PROTECTION
- TSC — TEMPORARY STREAM CROSSING

MORELL ENGINEERING
MORELL JOB # : 22-0130

EDEN ELEMENTARY ADDITION
AND
COOSA VALLEY ELEMENTARY SCHOOL ADDITION
FOR
PELL CITY SCHOOLS
PELL CITY, ALABAMA

McKEE and ASSOCIATES
ARCHITECTS, INC.
631 SOUTH HULL STREET MONTGOMERY, ALABAMA 36104 (334) 834-9933

SHEET TITLE :	EROSION & SEDIMENT CONTROL PLAN
MCKEE JOB # :	21.184
PSCA # :	XXX
DRAWN BY :	BHD
DATE:	06.01.22
REVISED DATE:	
REVISED DATE:	
REVISED DATE:	

SHEET NO. : C-5.0

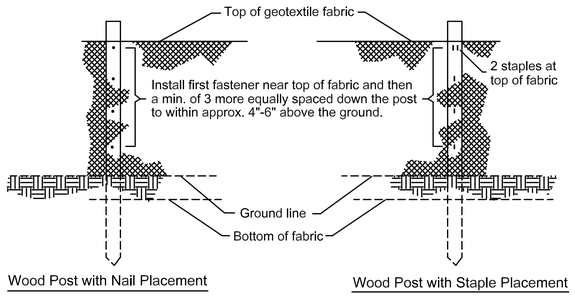

FRONT VIEW

FASTENERS FOR SILT FENCES

(Not to scale)

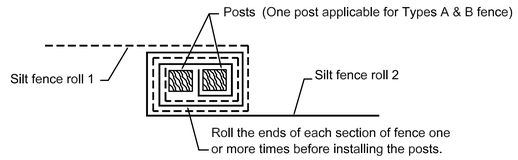

ROLL JOINT FOR JOINING TWO ADJACENT SILT FENCE SECTIONS

(Not to scale)

SILT FENCE INSTALLATION DETAIL

SCALE: NTS

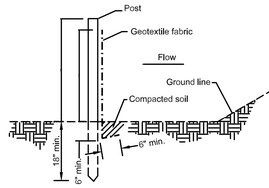

MAINTENANCE SCHEDULE:

REMOVE SEDIMENT DEPOSITS WHEN THEY REACH A DEPTH OF 15" OR ½ THE HEIGHT OF THE FENCE AS INSTALLED TO PROVIDE ADEQUATE STORAGE VOLUME FOR THE NEXT RAIN AND TO REDUCE PRESSURE ON THE FENCE. SHOULD THE FABRIC OF SILT FENCE COLLAPSE, TEAR, DECOMPOSE OR BECOME INEFFECTIVE, REPLACE IT PROMPTLY

NOTES:

1. SILT FENCE SHALL BE PER THE LATEST ALABAMA EROSION CONTROL HANDBOOK
2. USE D.O.T. APPROVED WOVEN WIRE FENCE
3. USE 4' MIN. STEEL POSTS (1.3 LB/FT MIN.)
4. THE WOVEN WIRE FENCING SHALL BE FASTENED TO THE UPSTREAM SIDE OF POSTS BY STAPLES OR WIRE TIES.
5. GEOTEXTILE FABRIC SHALL BE SECURELY FASTENED TO THE WOVEN WIRE FENCING.

SIDE VIEW

(Not to scale)

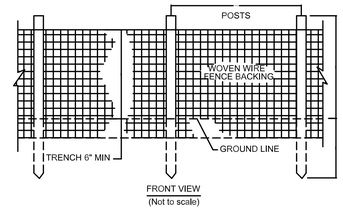

FRONT VIEW

(Not to scale)

SB SILT FENCE DETAIL

SCALE: NTS

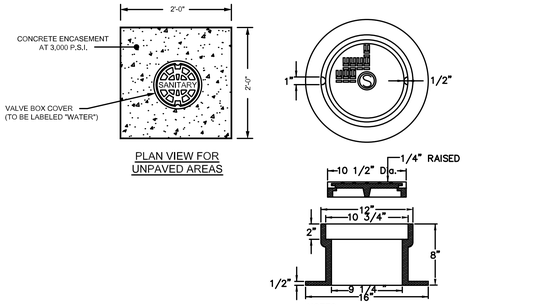

PLAN VIEW FOR UNPAVED AREAS

NOTES:

1. A MINIMUM CLEARANCE OF 4 INCHES IS REQUIRED BETWEEN CLEANOUT CAP AND TOP OF COVER.
2. CAPITOL FOUNDRY FRAME AND COVER ITEM # VB-9"S

TRAFFIC BEARING CLEANOUT BOX

NOT TO SCALE

R100A

SILT - SAVER

EROSION AND SEDIMENT CONTROL PRODUCTS

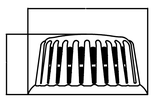

ELEVATION VIEW

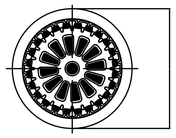

PLAN VIEW

FILTER OPTIONS FOR ASSEMBLIES:

1) R100A-HF(HIGH-FLOW FILTER) GREEN HIGH FLOW MATERIAL THROUGHOUT THE TOP OF THE FILTER EXTENDING TO ROCK BAG PLATFORM.
2) R100A-DOT(DOT FILTER) GREEN HIGH FLOW MATERIAL ALLOWS FOR STORM WATER OVERFLOW AT THE TOP OF THE FILTER WHILE THE GRAY HIGH EFFICIENCY SEDIMENT FILTRATION FABRIC COVERS THE BOTTOM HALF OF THE FILTER EXTENDING TO THE ROCK BAG PLATFORM. IT IS THE PURCHASERS RESPONSIBILITY TO SELECT APPROPRIATE FILTER.

FILTER INSTALLATION

FILTER SHOULD BE PLACED OVER FRAME. POCKETS ON THE EDGES OF THE FILTER SHOULD BE FILLED WITH ROCK. INSTALLER SHALL PROVIDE ROCK FOR FILTER POCKETS

MAINTENANCE

ALL TEMPORARY EROSION, SEDIMENTATION, & POLLUTION CONTROL PRACTICES SHOULD BE INSPECTED DAILY. CONTRACTOR SHALL REMOVE SEDIMENT AND DISPOSE OF IN A PROPER MANNER. INSPECT FRAME AND FILTER DAILY FOR CUTS, ABRASIONS, AND PROPER INSTALLATION. REPLACE OR REPOSITION AS NECESSARY.

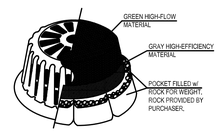

ISOMETRIC ASSEMBLY VIEW

OF R100A-DOT

REPLACEMENT FILTERS: MODEL # R-140(HF OR R-140(DOT

ROUND BASE FRAME & FILTER ASSEMBLY

60" DIAMETER AKA "SS-100A (Round)"

Model # R-100A

FRAME MATERIAL: BLACK PE	
FILTER FABRIC MATERIAL: REFER TO SPEC	
SCALE: NOT TO SCALE	
LAST UPDATED: MARCH 2021	

SILT-SAVER, INC. 1200 FORRESTER CEMETERY RD, COVINGTON, GA 30014 PHONE: (770) 388-7816 FAX: (770) 388-7540 TOLL FREE: 1-888-392-SILT (7458) www.siltsaver.com

RIPRAP DITCH PROFILE DETAIL

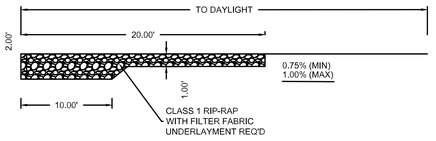

RIPRAP DITCH SECTION

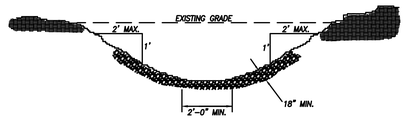

NOTE:

1. BOTTOM WIDTH IS DETERMINED BY ENGINEER.

2. A 3:1 SIDE SLOPE IS PREFERRED, BUT NO SLOPE CAN EXCEED 2:1.

PIPE SIZE	*BOTTOM WIDTH*
15 IN	*2 FT*
18 IN	*2 FT*
24 IN	*3 FT*
30 IN	*3 FT*
36 IN	*4 FT*
42 IN	*4 FT*
48 IN	*5 FT*
54 IN	*5 FT*
60 IN	*6 FT*
72 IN	*7 FT*

NTS

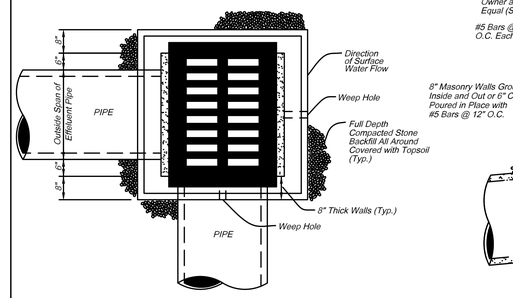

PLAN

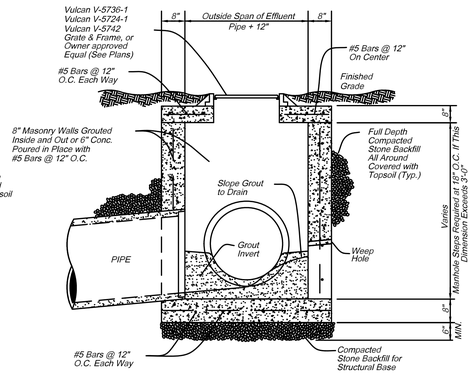

TYPICAL SECTION

STANDARD FLAT GRATE INLET DETAIL

NOT TO SCALE

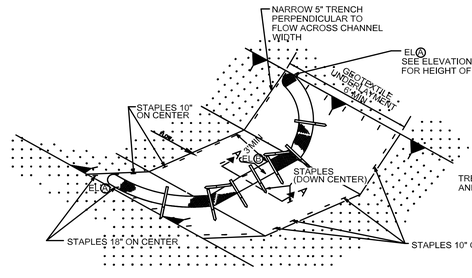

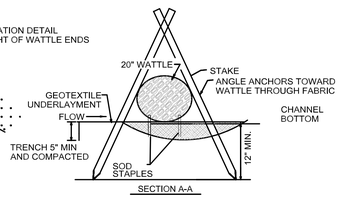

SECTION A-A

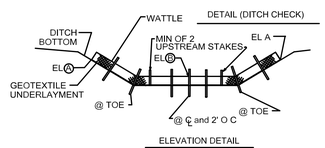

ELEVATION DETAIL

NOTE: END POINTS Ⓐ MUST BE HIGHER THAN FLOWLINE POINT Ⓑ

1. REFER TO ALDOT SPECIAL DRAWING NO. ESC-300 FOR RECOMMENDED INTERVAL BETWEEN WATTLES.
2. ANCHORING STAKES SHALL BE SIZED, SPACED, DRIVEN, AND BE OF A MATERIAL THAT EFFECTIVELY SECURES THE CHECK. STAKE SPACING SHALL BE A MAXIMUM OF TWO FEET.
3. SECURE GEOTEXTILE UNDERLAYMENT BY PLACING STAPLES 18 INCHES APART ALONG THE CHANNEL EDGES AND DOWN THE CENTER OF THE CHANNEL. SPACE STAPLES 10 INCHES APART ACROSS THE UPSTREAM AND DOWN STREAM EDGES.
4. PLACE STAPLES ON BOTH SIDES OF WATTLE AT 10 INCH SPACING.

SBW SEDIMENT BARRIER WATTLE

SCALE: NTS

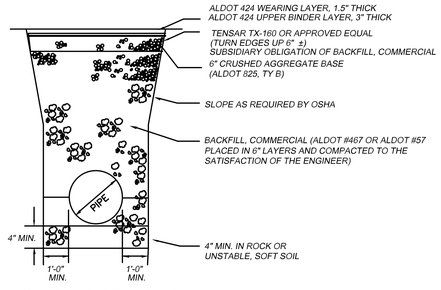

BACKFILL OF EXISTING TRAFFIC AREAS

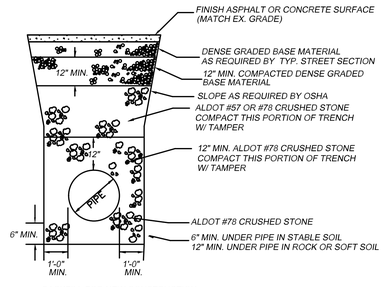

BACKFILL FOR NEW CONSTRUCTION

STORM AND UTILITY PIPE BEDDING

NOT TO SCALE

NOTES:

PROVIDE 1 1/2" DEEP BY 1/8" WIDE CONTROL JOINTS EVERY 5' WITH EXPANSION JOINTS EVERY 50'. EXPANSION MATERIAL CAN BE FILTER BOARD OR A TREATED 1x4.

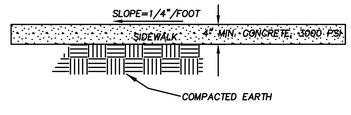

SIDEWALK DETAIL

NOT TO SCALE

EDEN ELEMENTARY ADDITION

AND

COOSA VALLEY ELEMENTARY SCHOOL ADDITION

FOR

PELL CITY SCHOOLS

PELL CITY, ALABAMA

McKEE and ASSOCIATES

ARCHITECTS, INC.

631 SOUTH HULL STREET MONTGOMERY, ALABAMA 36104 (334) 834-9933

SHEET TITLE : STANDARD DETAILS

MCKEE JOB # : 21.184

PSCA # : XXX

DRAWN BY : BHD

DATE: 06.01.22

REVISED DATE:

REVISED DATE:

REVISED DATE:

SHEET NO. : C-6.0

MORELL ENGINEERING

MORELL JOB # : 22-0130

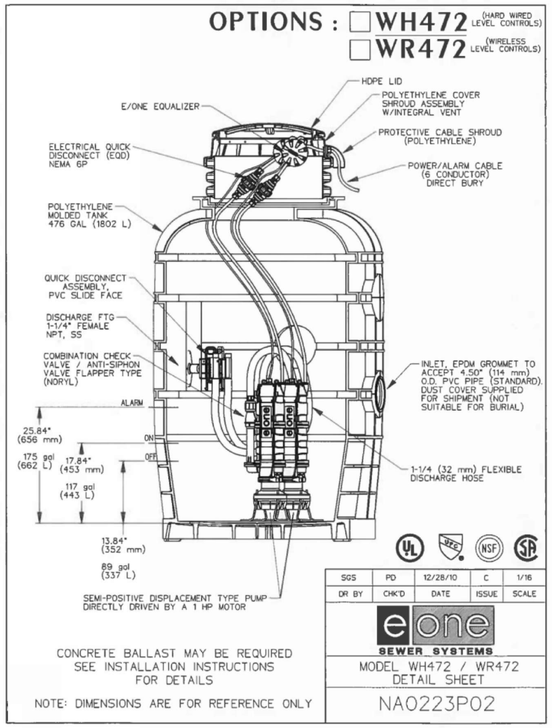

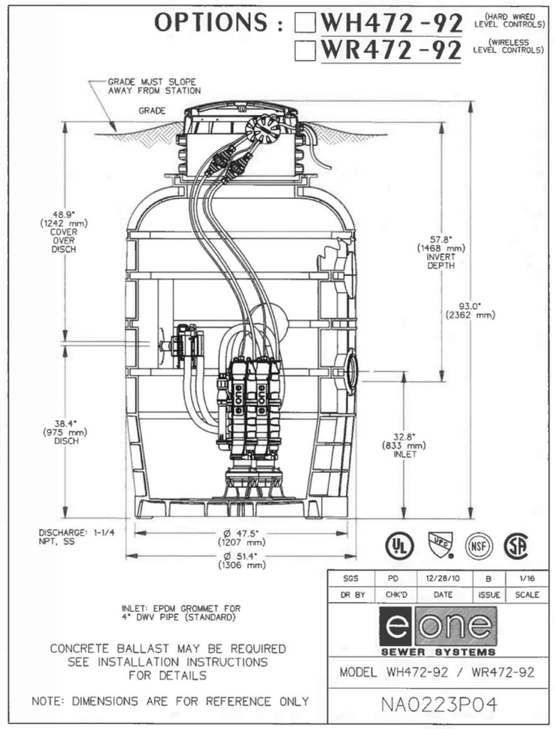

PUMP STATION
NOT TO SCALE

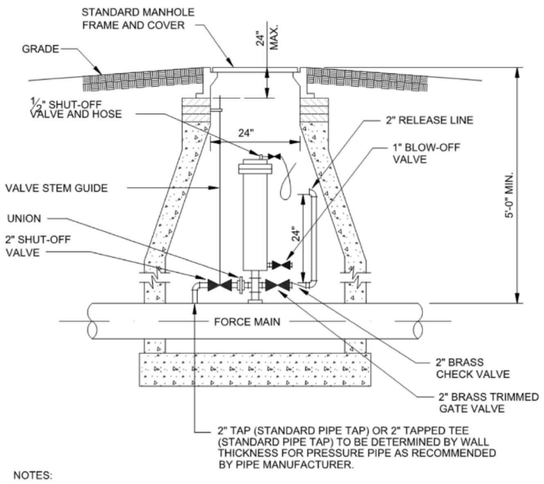

NOTES:

1. AIR RELEASE VALVE TO BE "CRISPIN SEWER VALVE", APCO 400 SEWAGE VALVE, OR EQUAL.
2. AIR VACUUM VALVE INSTALLATION TO BE SIMILAR EXCEPT VALVE TO BE APCO 402 SEWAGE VALVE OR EQUAL.
3. 2" RELEASE LINE, GATE AND CHECK VALVE ON AIR-VACUUM VALVE ONLY.

SANITARY SEWER AIR RELEASE VALVE
NOT TO SCALE

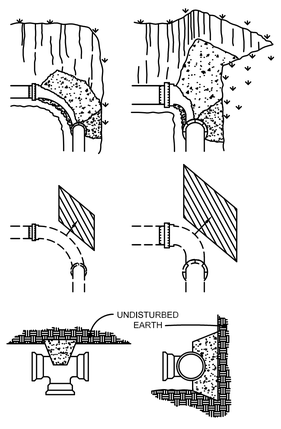

MINIMUM CONCRETE BLOCKING (C.Y.) *					
NOMINAL PIPE DIAMETER INCHES	TEES & DEAD ENDS	90° BEND	45° BEND	22½° BEND	11¼° BEND
4	⅓	⅓	⅓	⅓	⅓
6	⅓	⅓	⅓	⅓	⅓
8	⅓	½	⅓	⅓	⅓
10	⅔	¾	½	⅓	⅓
12	¾	1.0	⅔	⅓	⅓

NOTES:
1. FITTING SHALL BE WRAPPED WITH A MINIMUM 4 MIL PLASTIC.
2. NO CONCRETE SHALL COVER BOLTS OR GLANDS.

* CONCRETE SHALL BE 3,000 P.S.I. MIX.

THURST BLOCK DETAIL & SCHEDULE
NOT TO SCALE

MORELL ENGINEERING
MORELL JOB # : 22-0130

EDEN ELEMENTARY ADDITION
AND
COOSA VALLEY ELEMENTARY SCHOOL ADDITION
FOR
PELL CITY SCHOOLS
PELL CITY, ALABAMA

McKEE and ASSOCIATES
ARCHITECTS, INC.
631 SOUTH HULL STREET MONTGOMERY, ALABAMA 36104 (334) 834-6933

ALABAMA REGISTERED ARCHITECT BRIAN H. DAVIS 20022

SHEET TITLE : STANDARD DETAILS

MCKEE JOB # : 21.184

PSCA # : XXX

DRAWN BY : BHD

DATE: 06.01.22

REVISED DATE:

REVISED DATE:

REVISED DATE:

SHEET NO. : C-6.1

GENERAL NOTES

1. EXISTING CONDITIONS:
 1.1. PROJECT PLANS HAVE BEEN DEVELOPED FROM A VISUAL INSPECTION OF THE EXISTING BUILDING AND/OR PROJECT PLANS PROVIDED BY THE ARCHITECT. ACTUAL CONDITIONS MAY VARY. CONTRACTOR SHALL VERIFY ALL DIMENSIONS AND DETAILS RELATED TO EXISTING CONSTRUCTION AND MAKE MINOR ADJUSTMENTS AS REQUIRED. REPORT SIGNIFICANT DIFFERENCES TO ARCHITECT/ENGINEER.

2. GEOTECHNICAL INFORMATION
 2.1. A GEOTECHNICAL SUB-SURFACE INVESTIGATION HAS NOT BEEN PERFORMED FOR THIS PROJECT. FOUNDATION DESIGN IS BASED ON SUSPECTED SUB-SURFACE CONDITIONS TYPICAL FOR THE AREA. FOOTINGS ARE SIZED FOR A SOIL BEARING VALUE OF 2000 PSF. THE CONTRACTOR SHALL VERIFY THE CAPABILITY OF THE SOIL STRATA TO SUPPORT FOUNDATIONS PRIOR TO ERECTING THE BUILDING ON THE SITE. FOUNDATION SHALL EXTEND TO A MINIMUM OF FROST PENETRATION DEPTH, TO A DEPTH WHERE SOIL MOISTURE CONTENT DOES NOT FLUCTUATE, A MINIMUM DEPTH OF 24" INTO ORIGINAL SOIL AND A MINIMUM DEPTH TO ACHIEVE 2000 PSF BEARING CAPACITY (WHICHEVER IS GREATER). NOTIFY THE ENGINEER SHOULD ANY UNUSUAL SOIL CONDITIONS BE ENCOUNTERED.

3. FOUNDATIONS:
 3.1. THE "CONTROLLED AREA" SHALL EXTEND BENEATH AND 5 FEET BEYOND THE BUILDING AREA. THE "CONTROLLED AREA" SHALL BE COMPLETELY STRIPPED AND ALL SURFACE VEGETATION, ORGANIC FILL OR TOPSOIL, DEBRIS AND ANY OTHER NON-SUITABLE MATERIAL REMOVED.
 3.2. THE SUBGRADE ELEVATIONS SHALL BE ESTABLISHED BY CONSTRUCTION OF AN ENGINEERED FILL USING SUITABLE FILL EARTH, AND PLACED IN LIFTS NOT TO EXCEED 8". THE SUBGRADE SHALL BE DENSIFIED TO 98% (MIN.) STANDARD DENSITY (ASTM D-698A). VERIFYING IN-PLACE DENSITY TESTS ARE REQUIRED.
 3.3. THE CONTRACTOR SHALL DE-WATER THE AREA OF THE BUILDING FOOTPRINT AS REQUIRED TO PREVENT PONDING OF WATER IN THE FOOTING TRENCHES AND SLAB AREAS DURING EXCAVATION AND PRIOR TO CASTING FOOTINGS.
 3.4. ASSUMED BEARING CAPACITY AS LISTED BELOW SHALL BE VERIFIED PRIOR TO CASTING FOOTINGS.
 3.5. FOUNDATION DESIGN PARAMETERS:
  3.5.1. ALLOWABLE BEARING CAPACITY ---------- 2500 PSF
  3.5.2. MINIMUM PERIMETER FOOTING BEARING DEPTH BELOW OUTSIDE FINISH GRADE ---------- 24"
  3.5.3. MINIMUM INTERIOR FOOTING BEARING DEPTH BELOW FINISH FLOOR ELEVATION ---------- 24"

4. CONCRETE:
 4.1. CONCRETE SHALL CONFORM TO THE BUILDING CODE REQUIREMENT FOR REINFORCED CONCRETE (ACI 318).
 4.2. CONCRETE SHALL HAVE THE FOLLOWING COMPRESSIVE STRENGTH (f'c) AT 28 DAYS BASED UPON ITS USE:
  4.2.1. FOOTINGS, SLABS ON GRADE ---------- 3000 PSI (MIN.)
  4.2.2. ELEVATED SLABS ---------- 4000 PSI (MIN.)
 4.3. REINFORCING STEEL SHALL CONFORM TO ASTM A 615, GRADE 60.
 4.4. WELDED WIRE FABRIC (W,W.F.) SHALL CONFORM TO ASTM A 185.
  4.4.1. SLABS ON GRADE SHALL BE REINFORCED AS INDICATED ON PLANS W,W.F. PLACED AT 1/3 SLAB THICKNESS FROM TOP.
 4.5. CAST IN PLACE ANCHOR RODS SHALL CONFORM TO ASTM F 1554 GR. 36.
 4.6. MINIMUM CONCRETE COVER, (UNLESS OTHERWISE NOTED ON DRAWINGS) FOR REINFORCING SHALL BE:
  4.6.1. CAST AGAINST AND PERMANENTLY EXPOSED TO EARTH ---------- 3 IN.
  4.6.2. EXPOSED TO EARTH OR WEATHER ---------- 2 IN.
  4.6.3. BEAMS AND COLUMNS ---------- 1½ IN.
 4.7. LAP ALL CONTINUOUS REINFORCEMENT 30 BAR DIAMETER MINIMUM, UNLESS NOTED OTHERWISE.
 4.8. AT EXTERIOR BUILDING CORNERS FOOTINGS, PROVIDE 3'-0" X 3'-0" CORNER BARS, SAME SIZE AND NUMBER AS DETAILED HORIZONTAL BARS.
 4.9. DOWEL ALL FOOTINGS WHERE THEY ABUT WITH SAME REINFORCEMENT AS DETAILED HORIZONTALLY AND WITH 2'-0" MINIMUM LAP.
 4.10. CAST IN PLACE CONCRETE WALLS ARE UNSTABLE AND REQUIRE TEMPORARY CONSTRUCTION BRACING UNTIL INSTALLATION OF PERMANENT CONNECTION . TEMPORARY CONSTRUCTION BRACING IS THE SOLE RESPONSIBILITY OF THE CONTRACTOR
 4.11. SUBMITTALS
  4.11.1. CONCRETE MIX DESIGNS
   4.11.1.1. SUBMITTALS SHALL BE IN ACCORDANCE WITH ACI 301 AND ACI 318 (LATEST EDITIONS) PRIOR TO COMMENCEMENT OF CONCRETE WORK.
   4.11.1.2. SUBMITTAL SHALL BE REVIEWED AND APPROVED BY THE ARCHITECT AND ENGINEER OF RECORD PRIOR TO SCHEDULING CONCRETE DELIVERY TO JOB SITE.
  4.11.2. REINFORCEMENT SUBMITTALS
   4.11.2.1. SUBMITTALS SHALL BE IN ACCORDANCE WITH ACI 315 (LATEST EDITION) AND SHOW, AT MINIMUM, ALL SIZES, DIMENSIONS, LOCATIONS OF ALL REINFORCEMENT AND EMBEDMENTS.
   4.11.2.2. SUBMITTAL SHALL BE REVIEWED AND APPROVED BY THE ENGINEER OF RECORD PRIOR TO FABRICATING REINFORCEMENT.

5. MASONRY:
 5.1. CONCRETE MASONRY UNITS SHALL BE HOLLOW LOADBEARING CONFORMING TO ASTM C 90 ALL LOCATIONS.
  5.1.1. NET AREA COMPRESSIVE STRENGTH ---------- 3250 PSI
  5.1.2. DESIGN STRENGTH OF MASONRY ---------- 2500 PSI
 5.2. MORTAR SHALL BE GRADE S FOR BELOW GROUND LEVEL AND EITHER TYPE M OR TYPE S FOR ABOVE GROUND CONFORMING TO ASTM C-270.
  5.2.1. MORTAR COMPRESSIVE STRENGTH ---------- 2000 PSI
 5.3. HORIZONTAL JOINT REINFORCING SHALL BE LADDER TYPE FABRICATED WITH A SINGLE PAIR OF 9 GAGE SIDE RODS AND 9 GAGE CROSSRODS SPACED NOT MORE THAN 16" O.C. REINFORCEMENT SHALL BE FOR TOTAL WIDTH OF SINGLE AND MULTIPLE WIDTH UNIT WALLS.
 5.4. FILLED CELLS INDICATED ON PLAN SHALL BE FILLED WITH GROUT IN LIFTS OF 48" (MAX), TERMINATE LIFT 1-1/2" BELOW BED JOINT TO CREATE SHEAR KEY TO NEXT LIFT.
 5.5. STARTER DOWELS AND EACH ADDITIONAL VERTICAL BAR SHALL BE TIED IN ACCORDANCE WITH TMS SPECIFICATIONS AND LAPPED PER CMU LAP SCHEDULE. "WET SETTING" DOWELS SHALL NOT BE ALLOWED.
  5.5.1. GROUT COMPRESSIVE STRENGTH ---------- 3000 PSI
 5.6. MASONRY WALLS ARE UNSTABLE AND REQUIRE TEMPORARY CONSTRUCTION BRACING UNTIL INSTALLATION OF PERMANENT CONNECTION. TEMPORARY CONSTRUCTION BRACING IS THE SOLE RESPONSIBILITY OF THE CONTRACTOR.
 5.7. MASONRY CONTROL JOINTS (M.C.J.) SHALL BE REQUIRED WITH SPACING SHOWN ON ARCHITECTURAL PLAN, MAXIMUM SPACING OF 25' OR 3 TIMES WALL HEIGHT ALONG WALL LENGTH AND 12'-0" MAX FROM WALL CORNERS. CONSTRUCT AS SHOWN ON MASONRY CONTROL JOINT DETAIL ON STRUCTURAL DRAWINGS.

6. STRUCTURAL STEEL
 6.1. STRUCTURAL W-SECTION SHAPES SHALL CONFORM TO ASTM A992.
 6.2. STRUCTURAL RECTANGULAR HSS SHALL CONFORM TO ASTM A500 GR. C.
 6.3. STRUCTURAL ROUND HSS SHALL CONFORM TO ASTM A500 GR. C.
 6.4. STRUCTURAL AND MISCELLANEOUS STEEL ITEMS SHALL CONFORM TO ASTM A36.
 6.5. STRUCTURAL BOLTS SHALL BE ASTM A-325X WITH NUTS AND WASHERS.
 6.6. DETAIL, FABRICATION, AND ERECTION OF ALL STRUCTURAL STEEL SHALL BE IN ACCORDANCE WITH LATEST AISC STANDARDS AND SPECIFICATIONS.
 6.7. ALL WELDING SHALL BE IN ACCORDANCE WITH AWS D1.1 (LATEST EDITION)
 6.8. ELECTRODES SHALL BE E70XX.
 6.9. UNLESS OTHERWISE NOTED OR DETAILED, ALL SHEAR CONNECTIONS SHALL BE DESIGNED USING THE APPROPRIATE DATA FROM PART 10 -"DESIGN OF SIMPLE SHEAR CONNECTIONS" FROM THE AISC MANUAL OF STEEL CONSTRUCTION, LATEST EDITION. DESIGN END REACTION IS 60% OF TOTAL ALLOWABLE LOAD (60% x Vc) FROM THE ALLOWABLE LOAD OF BEAM TABLE FROM PART 9 - "DESIGN OF CONNECTING ELEMENTS" OF THE AISC MANUAL OF STEEL CONSTRUCTION, LATEST EDITION.

7. COLD-FORM METAL FRAMING
 7.1. CFMF SHALL BE DESIGNED ACCORDING TO THE AMERICAN IRON AND STEEL INSTITUTE (AISI) S100 (LATEST EDITION).
 7.2. ALL STRUCTURAL LOADBEARING MEMBERS SHALL BE FORMED FROM CORROSION RESISTANT STEEL CORRESPONDING TO THE REQUIREMENTS OF ASTM A446, WITH A MINIMUM YIELD STRENGTH Fy = 40 KSI FOR S STUDS GRADE A, 33 KSI FOR T TRACK. ALL STRUCTURAL MEMBERS SHALL BE ZINC COATED MEETING REQUIREMENTS FOR ASTM A525.
 7.3. MEMBERS SHALL BE INSTALLED LEVEL AND TRUE IN A WORKMANLIKE MANNER. INSTALL STRAPPING AND ACCESSORIES AS DETAILED AND AS REQUIRED FOR PROPER INSTALLATION.
 7.4. 15.4. THE PHYSICAL AND STRUCTURAL PROPERTIES LISTED BY THE MANUFACTURER SHALL BE CONSIDERED THE MINIMUM PERMITTED FOR ALL FRAMING MEMBERS.

8. PRECAST HOLLOW CORE SLABS
 8.1. ALL PRESTRESSED HOLLOWCORE CONCRETE PRODUCTS SHALL BE DESIGNED TO SUPPORT ALL COMBINATIONS OF THE DEAD AND LIVE LOAD INDICATED ON THE PLANS. DESIGN SHALL BE IN ACCORDANCE WITH ACI 318 (LATEST EDITION).
 8.2. ALL PRESTRESSED CONCRETE DESIGN SHALL BE ACCOMPLISHED BY, OR UNDER THE DIRECT SUPERVISION OF A PROFESSIONAL ENGINEER REGISTERED IN THE STATE OF ALABAMA, WHO HAS HAD A MINIMUM OF FIVE YEARS RESPONSIBLE EXPERIENCE IN PRESTRESSED CONCRETE DESIGN. THE ENGINEER SHALL AFFIX HIS/HER SIGNATURE AND SEAL TO ALL DESIGN CALCULATIONS AND SHOP DRAWINGS CERTIFYING THAT ALL PRESTRESSED CONCRETE PRODUCTS HAVE BEEN DESIGNED TO MEET THIS SPECIFICATION AND ALL LOAD CRITERIA SHOWN ON THE PLANS.
 8.3. THE PRECAST DESIGNER SHALL SUBMIT COMPLETE SHOP DRAWINGS INDICATING ALL RELEVANT CONSTRUCTION DETAILS AND DESIGN CALCULATIONS FOR REVIEW BY THE STRUCTURAL ENGINEER OF RECORD PRIOR TO FABRICATION.
 8.4. ALL CONNECTION, BEARING, AND FITTING DETAILS SHOWN ON THE PLANS INDICATE THE DESIGN INTENT. THE PRESTRESSED CONCRETE MANUFACTURER MAY BE PERMITTED TO MODIFY THESE DETAILS IF SUCH MODIFICATIONS WILL BE EQUALLY OR MORE EFFICIENT, MORE CONSISTENT WITH LATEST RECOMMENDED PRACTICES OF THE PRESTRESSED CONCRETE INSTITUTE, AND NO MORE COSTLY. SUCH MODIFICATIONS SHALL BE REVIEWED AND APPROVED BY THE ENGINEER OF RECORD.
 8.5. ALL PRESTRESSED CONCRETE PRODUCTS SHALL BE DESIGNED WITH AT LEAST SUFFICIENT CAMBER TO PROPERLY OFFSET DEFLECTION UNDER FULL SUPERIMPOSED DEAD LOADS. THE ANTICIPATED CAMBER SHALL BE COMPUTED BY THE PRESTRESSED CONCRETE MANUFACTURER. DESIGN CAMBER IN INCHES UNDER FULL DEAD LOAD SHOULD NOT EXCEED SPAN(INCHES)/360. RESIDUAL CAMBER SHALL NOT VARY FROM THE DESIGN CAMBER MORE THAN 1/8" PER 10' OF MEMBER LENGTH WITH A MAXIMUM VARIANCE OF 1/2". DIFFERENTIAL CAMBER BETWEEN ADJACENT MEMBERS IN THE FINAL ERECTED POSITION SHOULD NOT EXCEED TOLERANCES AS DEFINED IN PCI MNL-116 MANUAL FOR QUALITY CONTROL.
 8.6. TOPPING: HOLLOWCORE PLANKS SHALL BE THOROUGHLY CLEANED AND WET, PRIOR TO CASTING TOPPING TO INSURE ADEQUATE BOND STRENGTH. STRUCTURAL TOPPING SHALL BE OF 3000 PSI, 28 DAY STRENGTH CONCRETE. THE THICKNESS OF THE TOPPING SHALL BE A MINIMUM OF 4 IN. THROUGHOUT THE ENTIRE ROOF WITH #4 @ 12" O.C. EA. WAY CENTERED IN TOPPING SLAB.
 8.7. USE AND TYPE OF BEARING PADS SHALL BE AS DIRECTED BY THE PRECAST SUPPLIER.
 8.8. GROUTING: ALL JOINTS BETWEEN SLABS SHALL BE FULLY PACKED WITH A STIFF GROUT CONSISTING OF 1 PART PORTLAND CEMENT TO 3 PARTS CLEAN SAND. THE GROUTED DECK SHALL BE ALLOWED TO CURE OVERNIGHT BEFORE REMOVING ANY LEVELING SHORES, CUTTING ANY HOLES, RESTRAINING ENDS, OR APPLYING ANY FURTHER CONSTRUCTION.

9. DESIGN LOADS:

SEE S0.2 FOR ALL STORM SHELTER RELATED LOADING AND DESIGN PARAMETERS

 9.1. LIVE LOADS:
  9.1.1. TYPICAL ROOF ---------- 20 PSF (REDUCIBLE)
  9.1.2. STORM SHELTER CEILING ---------- 100 PSF
  9.1.3. TYPICAL FLOOR ---------- 40 PSF
  9.1.4. PUBLIC FLOOR CORRIDOR ---------- 100 PSF
 9.2. DEAD LOADS
  9.2.1. SHELTER ROOF ---------- 10 PSF
  9.2.2. 12" HOLLOW CORE SELF WEIGHT ---------- 77 PSF
  9.2.3. CEILING/COLLATERAL ---------- 10 PSF
 9.3. WIND LOAD (NON SHELTER)
  9.3.1. DESIGN CODE ---------- ASCE 7-10
  9.3.2. DESIGN WIND SPEED (ULT. 3 SEC GUST) ---------- 120 MPH
  9.3.3. OCCUPANCY CATEGORY ---------- III
  9.3.4. WIND EXPOSURE CATEGORY ---------- C
  9.3.5. INTERNAL PRESSURE COEFFICIENTS ---------- +/- 0.18
 9.4. SEISMIC PARAMETERS (NON SHELTER):
  9.4.1. SEISMIC USE GROUP ---------- III
  9.4.2. SEISMIC IMPORTANCE FACTOR (Ie)---------- 1.25
  9.4.3. MAPPED SPECTRAL RESPONSE ACCELERATION:
   9.4.3.1. Ss ---------- 0.245
   9.4.3.2. S1 ---------- 0.101
  9.4.4. SITE CLASS---------- D
  9.4.5. SPECTRAL RESPONSE COEFFICIENTS:
   9.4.5.1. Sds ---------- 0.262
   9.4.5.2. Sd1 ---------- 0.162
   9.4.5.3. SEISMIC DESIGN CATEGORY ---------- C

10. APPLICABLE CODES AND STANDARDS
 10.1. INTERNATIONAL BUILDING CODE 2015
 10.2. AMERICAN CONCRETE INSTITUTE
 10.3. CONCRETE REINFORCING STEEL INSTITUTE
 10.4. AMERICAN INSTITUTE OF STEEL CONSTRUCTION
 10.5. AMERICAN IRON AND STEEL INSTITUTE
 10.6. AMERICAN SOCIETY OF TESTING AND MATERIALS
 10.7. AMERICAN WELDING SOCIETY
 10.8. STEEL JOIST INSTITUTE
 10.9. THE MASONRY SOCIETY

8" CMU REINFORCEMENT LAP SPLICE SCHEDULE			
MASONRY STRENGTH (f'm) (PSI)	BAR SIZE (#)	DEVELPMENT/ LAP LENGTH (FT.-IN.)	NOTES
2500	3	1'-6"	REINFORCEMENT TO BE CENTERED IN CELL UNLESS OTHERWISE NOTED
	4	2'-0"	
	5	2'-6"	
	6	3'-4"	

12" CMU REINFORCEMENT LAP SPLICE SCHEDULE			
MASONRY STRENGTH (f'm) (PSI)	BAR SIZE (#)	DEVELPMENT/ LAP LENGTH (FT.-IN.)	NOTES
2500	3	1'-6"	REINFORCEMENT TO BE CENTERED IN CELL UNLESS OTHERWISE NOTED
	4	2'-0"	
	5	2'-6"	
	6	3'-0"	
	7	3'-6"	

NON-SHELTER CMU WALL REINFORCEMENT SCHEDULE				
MARK	LOCATION	SIZE	MAX HT.	VERT. REINF.
W-1	INTERIOR	8" CMU	12'-8" *	#4 @ 48" O.C.
W-2	EXTERIOR	8" CMU	16'-8" **	#5 @ 32" O.C.

CONCRETE REINFORCEMENT LAP SPLICE SCHEDULE (3000 PSI CONCRETE)		
BAR SIZE (#)	DEVELOPMENT LENGTH (IN.)	CLASS B TENSION SPLICE (IN.)
3	17	22
4	22	29
5	28	36
6	33	43
7	48	63
8	55	72
9	62	81
10	70	91
11	78	101

CONCRETE REINFORCEMENT LAP SPLICE SCHEDULE (4000 PSI CONCRETE)		
BAR SIZE (#)	DEVELOPMENT LENGTH (IN.)	CLASS B TENSION SPLICE (IN.)
3	15	19
4	19	25
5	24	31
6	29	37
7	42	54
8	48	62
9	54	70
10	61	79
11	67	87

BRICK VENEER LINTEL SCHEDULE (BL-X)				
MARK	WALL TYPE	MAX SPAN (X'-X")	SIZE	NOTES
BL-1	CMU	3'-4"	L4x4x¼	8" LOOSE BRNG. EA. END
BL-2	CMU	6'-4"	L6x4x⅜	8" LOOSE BRNG. EA. END
BL-3	CMU	9'-4"	L6x6x½	8" LOOSE BRNG. EA. END
BL-4	CMU	11'-4"	L6x6x⅝	SEE 20/S3.2B - ATTACH TO WALL AS INDICATED

NON-SHELTER CMU LINTEL SCHEDULE (8L-X)					
MARK	WALL SIZE	MAX SPAN (X'-X")	SIZE	REINFORCEMENT	NOTES
8L-1	8"	3'-4"	8" HIGH U-BLOCK	2-#4 BOTT.	
8L-2	8"	6'-4"	16" HIGH U-BLOCK	2-#5 TOP & BOTT.	

WALL SCHEDULE NOTES:
1. BEAR LINTELS 8" MINIMUM EACH END. PROVIDE VERTICAL REINFORCEMENT AND FULL HEIGHT GROUT (SAME SIZE REINFORCEMENT AS SPECIFIED IN WALL) AT EACH JAMB CELL.
2. JAMB CELL REINFORCEMENT SHALL BE CONTINUOUS THROUGH U-BLOCK

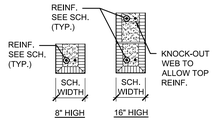

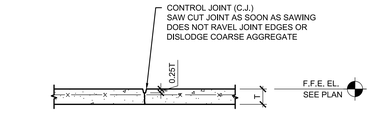

1 S0.1 **CONCRETE CONTROL JOINT (C.J.)**
SCALE: 3/4" = 1'-0"

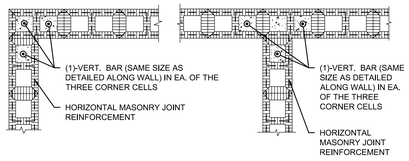

3 S0.1 **TYPICAL CMU CORNER REINF.**
SCALE: 3/4" = 1'-0"

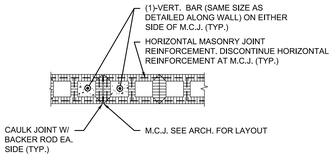

5 S0.1 **TYPICAL MASONRY CONTROL JOINT (M.C.J.)**
SCALE: 3/4" = 1'-0"

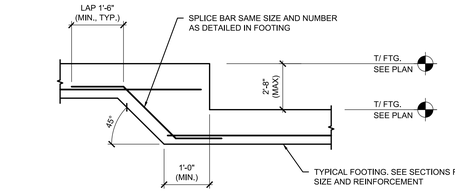

2 S0.1 **TYPICAL FOOTING STEP**
SCALE: 3/4" = 1'-0"

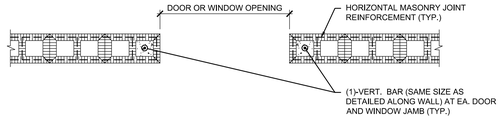

4 S0.1 **TYPICAL CMU JAMB REINF.**
SCALE: 3/4" = 1'-0"

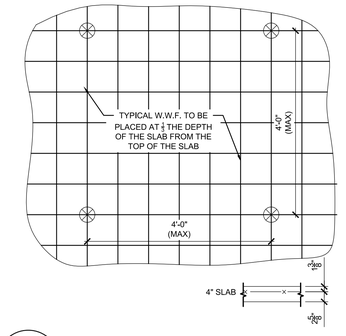

6 S0.1 **TYP. W.W.F. PLACEMENT DIAGRAM**
SCALE: 3/4" = 1'-0"

DAY STRUCTURES
OUR WORK STANDS UP
141 W. MAIN STREET
PRATTVILLE, AL 36067
334.277.9550

EDEN ELEMENTARY ADDITION
AND
COOSA VALLEY ELEMENTARY SCHOOL ADDITION
FOR
PELL CITY SCHOOLS
PELL CITY, ALABAMA

McKEE and ASSOCIATES
ARCHITECTS, INC.
631 SOUTH HULL STREET MONTGOMERY, ALABAMA 36104 (334) 834-9933

ALABAMA LICENSED 05.26.2022 No. 33907 PROFESSIONAL ENGINEER TIMOTHY N. SANFORD

SHEET TITLE : GENERAL NOTES, TYPICAL SECTIONS, AND SCHEDULES

MCKEE JOB # : 21.184

PSCA # : XXX

DRAWN BY : TNS

DATE: 05.26.2022

REVISED DATE:

REVISED DATE:

REVISED DATE:

SHEET NO. : S0.1

SHELTER DESIGN MEETS OR EXCEEDS ICC 500-2014 COMMUNITY SHELTER CRITERIA

DESIGN CRITERIA :

ROOF LIVE LOAD ---------- 100 PSF	(ICC 500-14, SEC. 303.2)
TORNADO DESIGN WIND SPEED ---------- 250 MPH	(ICC 500-14, FIGURE 304.2(1))
VERTICAL MISSILE SPEED ---------- 2x4 @ 100 MPH	(ICC 500-14, TABLE 305.1.1)
HORIZONTAL MISSILE SPEED ---------- 2x4 @ 67 MPH	(ICC 500-14, TABLE 305.1.1)
HURRICANE DESIGN ---------- *NOT A HURRICANE PRONE REGION	(ICC 500-14, FIGURE 304.2(2))
FLOOD DESIGN ---------- *OUTSIDE HIGH RISK HAZARD AREAS	(ICC 500-14, SEC. 401)

MISSILE IMPACT TESTED SYSTEM USED (OR EXCEEDED):

HORIZONTAL:
FULLY GROUTED 8" CMU W/ #5 REBAR SPACED @ 48" O.C AND AT EVERY OPENING AND CORNER (FEMA P-361, FIGURE B8-18)

VERTICAL:
4" THICK CONCRETE SLAB WITH #4 @ 12" O.C. REBAR EACH WAY (FEMA P-361, FIGURE B8-21)

WIND PARAMETERS:

WIND DESIGN PER ASCE 7-10 COMPONENTS AND CLADDING PROCEDURE	(ICC 500-14, SEC. 304.1)
BASIC WIND SPEED, V ---------- 250 MPH	(ICC 500-14, FIGURE 304.2(1))
RISK CATEGORY ---------- IV	(ASCE 7-10, TABLE 1.5-1)
WIND DIRECTIONALITY FACTOR, Kd ---------- 1.0	(ICC 500-14, SEC. 304.3)
EXPOSURE CATEGORY ---------- C	(ICC 500-14, SEC. 304.4)
VELOCITY PRESSURE EXP. COEFFICIENT., Kz ------- 0.85	(ASCE 7-10, TABLE 27.3-1)
TOPOGRAPHIC FACTOR, Kzt ---------- 1.0	(ICC 500-14, SEC. 304.5)
GUST EFFECT FACTOR, G ---------- 0.85	(ASCE 7-10 26.9.1)
ENCLOSURE CLASSIFICATION ---------- PARTIALLY ENCLOSED	(ICC 500-14, 304.7)
INTERNAL PRESSURE COEFFICIENT, GCpi---------- ± 0.55	(ICC 500-14, 304.7)

SEISMIC PARAMETERS:

SEISMIC USE GROUP ---------- IV	
SEISMIC IMPORTANCE FACTOR (Ie)---------- 1.5	
RESPONSE MODIFICATION FACTOR (R)---------- 5	
MAPPED SPECTRAL RESPONSE ACCELERATION:	
Ss ---------- 0.245	
S1 ---------- 0.101	
SITE CLASS---------- D (ASSUMED)	
SPECTRAL RESPONSE COEFFICIENTS:	
Sds ---------- 0.262	
Sd1 ---------- 0.162	
SEISMIC DESIGN CATEGORY ---------- D	

SHELTER CMU WALL REINFORCEMENT SCHEDULE

MARK	LOCATION	SIZE	MAX HT.	VERT. REINF.	NOTES
SW-1	EXTERIOR**	12" CMU	14'-0" *	#5 @ 8" O.C.	FILL ALL CELLS WITH GROUT
SW-2	INTERIOR	12" CMU	12'-8" *	#5 @ 16" O.C.	FILL ALL CELLS WITH GROUT

WALL SCHEDULE NOTES:
* WALL HEIGHT MEASURED FROM FINISH FLOOR TO TOP OF BOND BEAM
** "EXTERIOR" REFERS TO ENVELOPE OF STORM SHELTER

1. WHERE WALLS OCCUR AND ARE NOT CALLED OUT, USE APPLICABLE WALL TYPE IN SCHEDULE ABOVE
2. PROVIDE DOWEL SAME SIZE AS VERTICAL BAR @ EA. VERTICAL BAR. LAP AS INDICATED IN SCHEDULE
3. PROVIDE CORNER REINFORCEMENT AS INDICATED IN 3/S0.1
4. PROVIDE VERTICAL BARS AT EA. DOOR AND WINDOW JAMB AS INDICATED IN 1/S0.2

STORM SHELTER 12' CMU LINTEL SCHEDULE (12L-X)

MARK	WALL SIZE	MAX SPAN (X'-X")	SIZE	REINFORCEMENT	JAMBS (SEE 1/S0.2)
12L-0	12"	2'-0"	8" HIGH U-BLOCK	2-#5 BOTT.	2-#5 JAMB BARS
12L-1	12"	4'-4"	16" HIGH U-BLOCK	2-#5 TOP & BOTT.	2-#5 JAMB BARS
12L-2	12"	6'-4"	24" HIGH U-BLOCK	2-#6 TOP & BOTT.	2-#5 JAMB BARS IN EA. OF THE TWO ADJACENT CELLS (4 TOTAL EACH SIDE)
12L-3	12"	10'-0"	24" HIGH U-BLOCK	2-#6 TOP & BOTT.	2-#6 JAMB BARS IN EA. OF THE TWO ADJACENT CELLS (4 TOTAL EACH SIDE)
12L-4 (EDEN ONLY)	12"	4'-7"	16" HIGH U-BLOCK	2-#5 TOP & BOTT.	2-#5 JAMB BARS IN EA. OF THE TWO ADJACENT CELLS (4 TOTAL EACH SIDE)

WALL SCHEDULE NOTES:
1. BEAR LINTELS 8" MINIMUM EACH END. PROVIDE VERTICAL REINFORCEMENT AND FULL HEIGHT GROUT (SAME SIZE REINFORCEMENT AS SPECIFIED IN WALL) AT EACH JAMB CELL.
2. JAMB CELL REINFORCEMENT SHALL BE CONTINUOUS THROUGH U-BLOCK

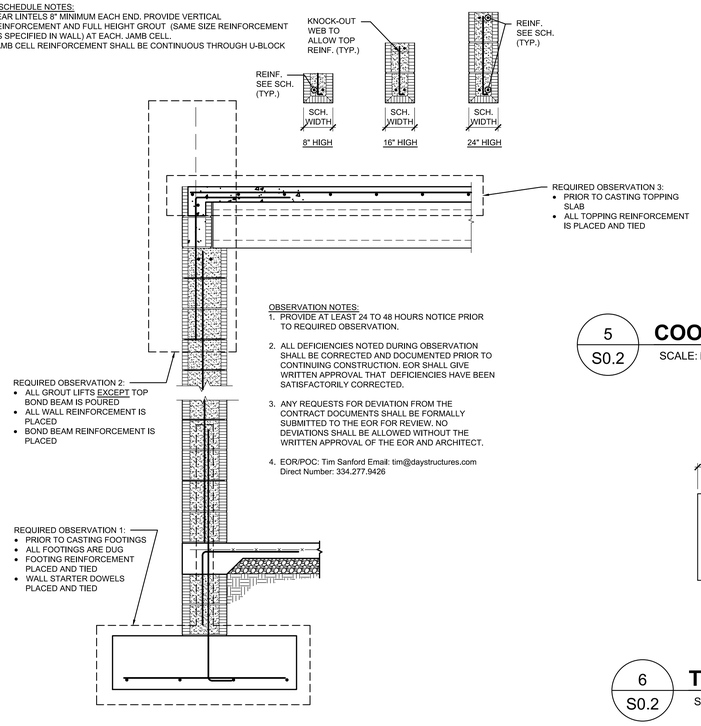

OBSERVATION NOTES:
1. PROVIDE AT LEAST 24 TO 48 HOURS NOTICE PRIOR TO REQUIRED OBSERVATION.
2. ALL DEFICIENCIES NOTED DURING OBSERVATION SHALL BE CORRECTED AND DOCUMENTED PRIOR TO CONTINUING CONSTRUCTION. EOR SHALL GIVE WRITTEN APPROVAL THAT DEFICIENCIES HAVE BEEN SATISFACTORILY CORRECTED.
3. ANY REQUESTS FOR DEVIATION FROM THE CONTRACT DOCUMENTS SHALL BE FORMALLY SUBMITTED TO THE EOR FOR REVIEW. NO DEVIATIONS SHALL BE ALLOWED WITHOUT THE WRITTEN APPROVAL OF THE EOR AND ARCHITECT.
4. EOR/POC: Tim Sanford Email: tim@daystructures.com Direct Number: 334.277.9426

3 / S0.2 **REQ'D OBSERVATIONS BY EOR**
SCALE: NTS

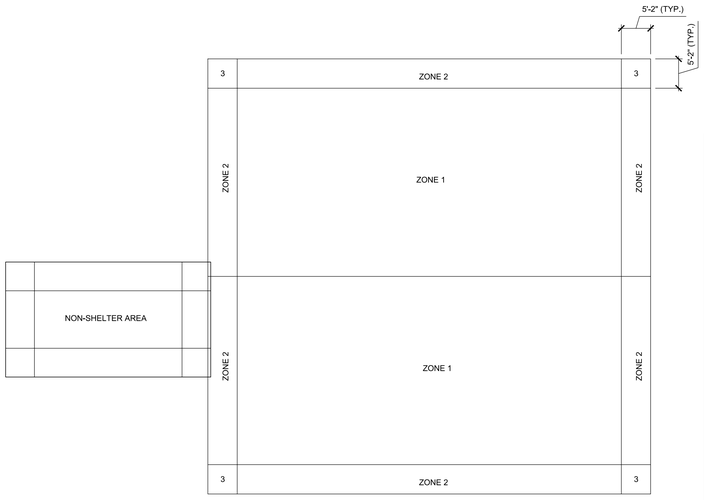

4 / S0.2 **EDEN ELEMENTARY ROOF PRESSURE DIAGRAM**
SCALE: N.T.S.

CALCULATED STORM SHELTER NET ROOF UPLIFT
- RELIABLE DEAD LOAD = [50 TOPPING SLAB] + [77 PSF HOLLOW CORE] = 127 PSF
- NET UPLIFT = 0.6(WL+RELIABLE DL)

ZONE 1 : NET UPLIFT = -42.1 PSF
ZONE 2 : NET UPLIFT = -58.4 PSF
ZONE 3 : NET UPLIFT = -58.4 PSF

EDEN ELEMENTARY SHELTER ROOF & WALLS
WIND COMPONENTS & CLADDING DESIGN PRESSURES

ZONE	EFFECTIVE WIND AREA (SQ. FT.)	3 SEC. ULTIMATE GUST PRESSURE (PSF) + (INWARD)	- (OUTWARD)
ZONE 1 (TYPICAL ROOF)	10	115.6	-210.8
	25	110.2	-205.4
	50	106.1	-201.3
	>100	102.0	-197.2
ZONE 2 (ROOF EDGES)	10	115.6	-319.6
	25	110.2	-281.7
	50	106.1	-253.1
	>100	102.0	-224.4
ZONE 3 (ROOF CORNERS)	10	115.6	-455.6
	25	110.2	-363.6
	50	106.1	-294.0
	>100	102.0	-224.4
ZONE 4 (TYPICAL WALL)	10	197.2	-209.4
	50	182.1	-194.3
	200	169.1	-181.3
	>500	160.5	-172.7
ZONE 5 (WALL CORNERS)	10	197.2	-246.2
	50	182.1	-215.9
	200	169.1	-189.9
	>500	160.5	-172.7

C&C NOTES:
1. (+) POSITIVE PRESSURE, ACTING TOWARDS THE BUILDING SURFACE
2. (-) NEGATIVE PRESSURE, ACTING AWAY FROM THE BUILDING SURFACE
3. ZONE 1 - TYPICAL ROOF SURFACE EXCLUDING EXTERIOR EDGES AND CORNERS
4. ZONE 2 - ROOF EDGES WITHIN DIMENSION SPECIFIED ON DIAGRAM
5. ZONE 3 - ROOF CORNERS WITHIN DIMENSION SPECIFIED ON DIAGRAM
6. ZONE 4 - TYPICAL WALL SURFACE EXCLUDING CORNERS
7. ZONE 5 - WALL CORNERS WITHIN DIMENSION SPECIFIED ON DIAGRAM

5 / S0.2 **COOSA VALLEY ELEM. ROOF PRESSURE DIAGRAM**
SCALE: N.T.S.

COOSA VALLEY ELEMENTARY SHELTER ROOF & WALLS
WIND COMPONENTS & CLADDING DESIGN PRESSURES

ZONE	EFFECTIVE WIND AREA (SQ. FT.)	3 SEC. ULTIMATE GUST PRESSURE (PSF) + (INWARD)	- (OUTWARD)
ZONE 1 (TYPICAL ROOF)	10	115.6	-210.8
	25	110.2	-205.4
	50	106.1	-201.3
	>100	102.0	-197.2
ZONE 2 (ROOF EDGES)	10	115.6	-319.6
	25	110.2	-281.7
	50	106.1	-253.1
	>100	102.0	-224.4
ZONE 3 (ROOF CORNERS)	10	115.6	-455.6
	25	110.2	-363.6
	50	106.1	-294.0
	>100	102.0	-224.4
ZONE 4 (TYPICAL WALL)	10	197.2	-209.4
	50	182.1	-194.3
	200	169.1	-181.3
	>500	160.5	-172.7
ZONE 5 (WALL CORNERS)	10	197.2	-246.2
	50	182.1	-215.9
	200	169.1	-189.9
	>500	160.5	-172.7

C&C NOTES:
1. (+) POSITIVE PRESSURE, ACTING TOWARDS THE BUILDING SURFACE
2. (-) NEGATIVE PRESSURE, ACTING AWAY FROM THE BUILDING SURFACE
3. ZONE 1 - TYPICAL ROOF SURFACE EXCLUDING EXTERIOR EDGES AND CORNERS
4. ZONE 2 - ROOF EDGES WITHIN DIMENSION SPECIFIED ON DIAGRAM
5. ZONE 3 - ROOF CORNERS WITHIN DIMENSION SPECIFIED ON DIAGRAM
6. ZONE 4 - TYPICAL WALL SURFACE EXCLUDING CORNERS
7. ZONE 5 - WALL CORNERS WITHIN DIMENSION SPECIFIED ON DIAGRAM

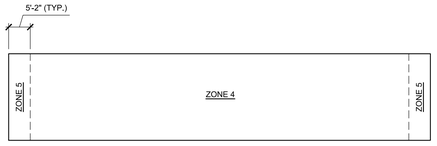

6 / S0.2 **TYPICAL WALL PRESSURE DIAGRAM**
SCALE: N.T.S.

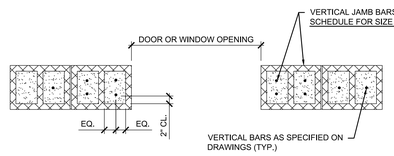

1 / S0.2 **TYP. SHELTER JAMB**
SCALE: 3/4" = 1'-0"

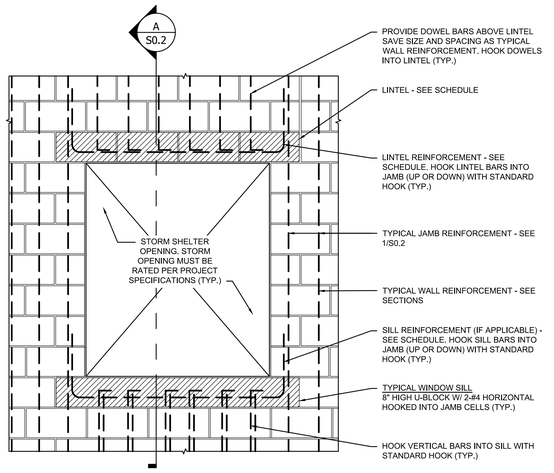

2 / S0.2 **TYP. SHELTER WINDOW / OPENING ELEVATION**
SCALE: 3/4" = 1'-0"

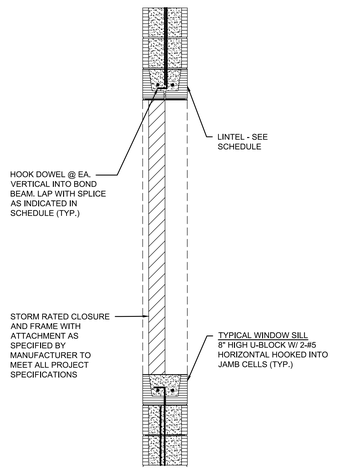

A / S0.2 **TYP. SHELTER WINDOW / OPENING**
SCALE: 3/4" = 1'-0"

EDEN ELEMENTARY ADDITION
AND
COOSA VALLEY ELEMENTARY SCHOOL ADDITION
FOR
PELL CITY SCHOOLS
PELL CITY, ALABAMA

McKEE and ASSOCIATES
ARCHITECTS, INC.
631 SOUTH HULL STREET MONTGOMERY, ALABAMA 36104 (334) 834-9933

ALABAMA LICENSED 05.26.2022 No. 35097 PROFESSIONAL ENGINEER TIMOTHY N. SANFORD

SHEET TITLE :	SHELTER NOTES, DETAILS, AND SCHEDULES
MCKEE JOB # :	21.184
PSCA # :	XXX
DRAWN BY :	TNS
DATE:	05.26.2022
REVISED DATE:	
REVISED DATE:	
REVISED DATE:	

DAY STRUCTURES
OUR WORK STANDS UP
141 W. MAIN STREET
PRATTVILLE, AL 36067
334.277.9550

SHEET NO. : S0.2

STRUCTURAL SCHEDULE OF SPECIAL INSPECTION SERVICES

PROJECT	Eden and Coosa Valley Elementary Schools Addition
INSPECTION SCOPE	Storm Shelter
PROJECT CODE	2015 IBC / ICC 500-14

IBC Reference	Material/ Activity	Service	APPLICABLE TO THIS PROJECT Y/N	EXTENT	AGENT*	DATE COMPLETED
1705.2	**Steel Construction**					
1705.2.1	**Structural Steel**					
	Inspection Tasks Prior to Welding	Per AISC 360 Table N5.4-1 (QC)	Y	Per Table	1	
	Inspection Tasks During Welding	Per AISC 360 Table N5.4-2 (QC)	Y	Per Table	1	
	Inspection Tasks After Welding	Per AISC 360 Table N5.4-3 (QC)	Y	Per Table	1	
	Inspection Tasks Prior to Bolting	Per AISC 360 Table N5.6-1 (QC)	N	Per Table	1	
	Inspection Tasks During Bolting	Per AISC 360 Table N5.6-2 (QC)	N	Per Table	1	
	Inspection Tasks After Bolting	Per AISC 360 Table N5.6-3 (QC)	N	Per Table	1	
1705.2.2	**Cold Form Steel Deck**					
	Inspection or Execution Tasks Prior to Deck Placement	Per ANSI/SDI "QA/QC For Installation of Steel Deck" Appendix 1 Table 1.1	N	Per Table	1	
	Inspection or Execution Tasks After Deck Placement	Per ANSI/SDI "QA/QC For Installation of Steel Deck" Appendix 1 Table 1.2	N	Per Table	1	
	Inspection or Execution Tasks Prior to Welding	Per ANSI/SDI "QA/QC For Installation of Steel Deck" Appendix 1 Table 1.3	N	Per Table	1	
	Inspection or Execution Tasks During Welding	Per ANSI/SDI "QA/QC For Installation of Steel Deck" Appendix 1 Table 1.4	N	Per Table	1	
	Inspection or Execution Tasks After Welding	ANSI/SDI QA/QC For Installation of Steel Deck Appendix 1 Table 1.5	N	Per Table	1	
	Inspection or Execution Tasks Prior to Mechanical Fastening	Per ANSI/SDI "QA/QC For Installation of Steel Deck" Appendix 1 Table 1.6	N	Per Table	1	
	Inspection or Execution Tasks During Mechanical Fastening	Per ANSI/SDI "QA/QC For Installation of Steel Deck" Appendix 1 Table 1.7	N	Per Table	1	
	Inspection or Execution Tasks After Mechanical Fastening	Per ANSI/SDI "QA/QC For Installation of Steel Deck" Appendix 1 Table 1.8	N	Per Table	1	
1705.2.3	**Open-Web Steel Joists & Girders**					
	Required Special Inspections of Open-Web Steel Joists and Joist Girders	IBC 2015 Table 1705.2.3	N	Per Table	1	
1705.2.4	**Cold Form Steel Trusses**					
		**Temporary Installation restraint/bracing installed per approved truss submittal	N	P	1	
	**For trusses spanning equal to or greater than 60'	**Permanent individual truss member restraint/bracing installed per approved truss submittal	N	P	1	
1705.3	**Concrete Construction**					
	Required Special Inspections and Tests of Concrete Construction	Per IBC 2015 Table 1705.3	Y	Per Table	1 & 2	
1705.3.1	**Welding Reinforcement Bars**	Per AWS D1.4/D1.4M:2011	N	Per Table	1	
1705.3.2	**Material Tests**	Per ACI 318-14 Chapters 19 and 20	Y	Per Spec	1	
1705.4	**Masonry Construction**					
	Level A Quality Assurance	Per TMS 402-13/ACI 530-13/ASCE 5-13 Table 3.1.1	N	Per Table	1 & 2	
	Level B Quality Assurance	Per TMS 402-13/ACI 530-13/ASCE 5-13 Table 3.1.2	Y	Per Table	1 & 2	
	Level C Quality Assurance	Per TMS 402-13/ACI 530-13/ASCE 5-13 Table 3.13	N	Per Table	1 & 2	
1705.4.1	**Empirically Designed Masonry, Glass Unit Masonry, & Masonry Veneer**					
	Level B Quality Assurance	Per TMS 402-13/ACI 530-13/ASCE 5-13 Table 3.1.2	N	Per Table	1	
1705.4.2	**Vertical Masonry**					
	Level A Quality Assurance	Per TMS 402-13/ACI 530-13/ASCE 5-13 Table 3.1.1	N	Per Table	1	
	Level B Quality Assurance	Per TMS 402-13/ACI 530-13/ASCE 5-13 Table 3.1.2	N	Per Table	1	
	Level C Quality Assurance	Per TMS 402-13/ACI 530-13/ASCE 5-13 Table 3.13	N	Per Table	1	
1705.5	**Wood Construction**					
	Prefabricated wood structural elements and assemblies	In Plant Review (See Note 3)	N	P	1	
1705.5.1	**High Load Diaphragms**					
	Verify Compliance with Approved Construction Documents	Sheathing Grade & Thickness	N	P	1	
		Nominal Size of Framing Member at Adjoining Panel Edges	N	P	1	
		Fastener Type, Diameter and Length	N	P	1	
		Individual Fastener Spacing	N	P	1	
		Fastener Row Spacing	N	P	1	
		Panel Edge Margins	N	P	1	
1705.5.2	**Metal Plate Connected Wood Trusses**					
	**For trusses spanning equal to or greater than 60'	**Temporary Installation restraint/bracing installed per approved truss submittal	N	P	1	
	**For trusses spanning equal to or greater than 60'	**Permanent individual truss member restraint/bracing installed per approved truss submittal	N	P	1	
1705.6	**Soils**					
	Required Special Inspections and Test of Soils	Per IBC 2015 Table 1705.6	Y	Per Table	3	
1705.7	**Driven Deep Foundation**					
	Required Special Inspections and Tests of Driven Deep Foundation Elements	Per IBC 2015 Table 1705.7	N	Per Table	1 & 3	
1705.8	**Cast-in-Place Deep Foundation**					
	Required Special Inspections and Tests of Cast-in-Place Deep Foundation Elements	Per IBC 2015 Table 1705.8	N		1 & 3	
1705.9	**Helical Pile Foundation**					
	Verify Compliance with Approved Construction Documents	Installation Equipment Used	N	C	1 & 3	
		Pile Dimension	N	C	1 & 3	
		Tip Elevations	N	C	1 & 3	
		Final Depth	N	C	1 & 3	
		Final Installation Torque	N	C	1 & 3	
1705.10	**Fabricated Items**					
		In Plant Review (See Note 3 Below)	N	P	1	
1705.11	**Special Inspections for Wind Resistance**					
1705.11.1	**Wood**					
	Verify Compliance with Approved Construction Documents	Field Gluing Operations of MWFRS Elements	N	C	1	
		All Fastening of the MWFRS	N	P	1	
1705.11.2	**Cold-Form Steel Light Frame Construction**					
	Verify Compliance with Approved Construction Documents	Welding of the MWFRS	N	P	1	
		Fastener Attachment of the MWFRS	N	P	1	
1705.11.3	**Wind Resisting Components**					
	Verify Compliance with Approved Construction Documents	Roof Covering	Y	P	1	
		Roof Deck	Y	P	1	
		Roof Framing	Y	P	1	
		Exterior Wall Coverings	Y	P	1	
		Wall Connections to Roof and Floor Diaphragms and Framing	Y	P	1	
1705.12	**Special Inspections for Seismic Resistance**					
1705.12.1	**Structural Steel**					
1705.12.1.1	**Seismic Force-Resisting System**					
	Visual Inspection Tasks Prior to Welding	Per "AISC 341" Table J6-1 (QC)	N	Per Table	1	
	Visual Inspection Tasks During Welding	Per "AISC 341" Table J6-2 (QC)	N	Per Table	1	
	Visual Inspection Tasks After Welding	Per "AISC 341" Table J6-3 (QC)	N	Per Table	1	
	Visual Inspection Tasks Prior to Bolting	Per "AISC 341" Table J7-1 (QC)	N	Per Table	1	
	Visual Inspection Tasks During Bolting	Per "AISC 341" Table J7-2 (QC)	N	Per Table	1	
	Visual Inspection Tasks After Bolting	Per "AISC 341" Table J7-3 (QC)	N	Per Table	1	
	Other Inspection Tasks	Per "AISC 341" Table J8-1 (QC)	N	Per Table	1	
	Inspection of Composite Structures Prior to Concrete Placement	Per "AISC 341" Table J9-1 (QC)	N	Per Table	1	
	Inspection of Composite Structures During Concrete Placement	Per "AISC 341" Table J9-2 (QC)	N	Per Table	1	
	Inspection of Composite Structures After Concrete Placement	Per "AISC 341" Table J9-3 (QC)	N	Per Table	1	
	Inspection of H-Piles	Per "AISC 341" Table J10-1 (QC)	N	Per Table	1	
1705.12.1.2	**Structural Steel**					
	Visual Inspection Tasks Prior to Welding	Per "AISC 341" Table J6-1 (QC)	N	Per Table	1	
	Visual Inspection Tasks During Welding	Per "AISC 341" Table J6-2 (QC)	N	Per Table	1	
	Visual Inspection Tasks After Welding	Per "AISC 341" Table J6-3 (QC)	N	Per Table	1	
	Visual Inspection Tasks Prior to Bolting	Per "AISC 341" Table J7-1 (QC)	N	Per Table	1	
	Visual Inspection Tasks During Bolting	Per "AISC 341" Table J7-2 (QC)	N	Per Table	1	
	Visual Inspection Tasks After Bolting	Per "AISC 341" Table J7-3 (QC)	N	Per Table	1	
	Other Inspection Tasks	Per "AISC 341" Table J8-1 (QC)	N	Per Table	1	
	Inspection of Composite Structures Prior to Concrete Placement	Per "AISC 341" Table J9-1 (QC)	N	Per Table	1	
	Inspection of Composite Structures During Concrete Placement	Per "AISC 341" Table J9-2 (QC)	N	Per Table	1	
	Inspection of Composite Structures After Concrete Placement	Per "AISC 341" Table J9-3 (QC)	N	Per Table	1	
	Inspection of H-Piles	Per "AISC 341" Table J10-1 (QC)	N	Per Table	1	
1705.12.2	**Structural Wood**					
	Verify Compliance with Approved Construction Documents	Field Gluing Operations of MSFRS Elements	N	C	1	
		All Fastening of the MSFRS	N	P	1	
1705.12.3	**Cold-Form Steel Light Frame Construction**					
	Verify Compliance with Approved Construction Documents	Welding of the MSFRS	N	P	1	
		Fastener Attachment of the MSFRS	N	P	1	
1705.12.8	**Seismic Isolation Systems**					
	Verify Compliance with Approved Construction Documents	Fabrication	N	P	1	
		Installation	N	P	1	
1705.12.9	**Cold-Formed Steel Special Bolted Moment Frames**					
	Verify Compliance with Approved Construction Documents	Installation	N	P	1	
1705.13	**Testing For Seismic Resistance**					
1705.13.1	**Structural Steel**					
1705.13.1.1	**Seismic Force-Resisting System**					
	Visual Inspection Tasks Prior to Welding	Per "AISC 341" Table J6-1 (QA)	N	Per Table	1	
	Visual Inspection Tasks During Welding	Per "AISC 341" Table J6-2 (QA)	N	Per Table	1	
	Visual Inspection Tasks After Welding	Per "AISC 341" Table J6-3 (QA)	N	Per Table	1	
	Visual Inspection Tasks Prior to Bolting	Per "AISC 341" Table J7-1 (QA)	N	Per Table	1	
	Visual Inspection Tasks During Bolting	Per "AISC 341" Table J7-2 (QA)	N	Per Table	1	
	Visual Inspection Tasks After Bolting	Per "AISC 341" Table J7-3 (QA)	N	Per Table	1	
	Other Inspection Tasks	Per "AISC 341" Table J8-1 (QA)	N	Per Table	1	
	Inspection of Composite Structures Prior to Concrete Placement	Per "AISC 341" Table J9-1 (QA)	N	Per Table	1	
	Inspection of Composite Structures During Concrete Placement	Per "AISC 341" Table J9-2 (QA)	N	Per Table	1	
	Inspection of Composite Structures After Concrete Placement	Per "AISC 341" Table J9-3 (QA)	N	Per Table	1	
	Inspection of H-Piles	Per "AISC 341" Table J10-1 (QA)	N	Per Table	1	
1705.13.1.2	**Structural Steel Elements**					
	Visual Inspection Tasks Prior to Welding	Per "AISC 341" Table J6-1 (QA)	N	Per Table	1	
	Visual Inspection Tasks During Welding	Per "AISC 341" Table J6-2 (QA)	N	Per Table	1	
	Visual Inspection Tasks After Welding	Per "AISC 341" Table J6-3 (QA)	N	Per Table	1	
	Visual Inspection Tasks Prior to Bolting	Per "AISC 341" Table J7-1 (QA)	N	Per Table	1	
	Visual Inspection Tasks During Bolting	Per "AISC 341" Table J7-2 (QA)	N	Per Table	1	
	Visual Inspection Tasks After Bolting	Per "AISC 341" Table J7-3 (QA)	N	Per Table	1	
	Other Inspection Tasks	Per "AISC 341" Table J8-1 (QA)	N	Per Table	1	
	Inspection of Composite Structures Prior to Concrete Placement	Per "AISC 341" Table J9-1 (QA)	N	Per Table	1	
	Inspection of Composite Structures During Concrete Placement	Per "AISC 341" Table J9-2 (QA)	N	Per Table	1	
	Inspection of Composite Structures After Concrete Placement	Per "AISC 341" Table J9-3 (QA)	N	Per Table	1	
	Inspection of H-Piles	Per "AISC 341" Table J10-1 (QA)	N	Per Table	1	

* INSPECTION AGENTS	FIRM	ADDRESS	TELEPHONE NO.
1. Owner's Approved Testing Agency			
2. Day Structures, 141 W. Main Street, Prattville, Alabama 36067 334-277-9550			
3. Geotechnical Engineer of Record or approved Geotechnical Engineer			
4.			
5.			

Notes:

1. The inspection and testing agent(s) shall be engaged by the Owner or the Owner's Agent, and not by the Contractor or Subcontractor whose work is to be inspected or tested. Any conflict of interest must be disclosed to the Building Official prior to commencing work. The qualification of the Special Inspector(s) and/or testing agencies may be subject to the approval of the Building Official and/or the Design Professional.

2. The list of Special Inspectors may be submitted as a separate document, if noted so above.

3. Inspection of fabricators is not required where the fabricator is approved in accordance with IBC Section 1704.2.2.

Encircle "Yes" or "No" as appropriate and date this document below:

Are Requirements for Seismic Resistance included in the *Statement of Special Inspections?* **Yes** / **No**

Are Requirements for Wind Resistance included in the *Statement of Special Inspections?* **Yes** / **No**

DATE: 5.26.2022

DAY STRUCTURES
OUR WORK STANDS UP
141 W. MAIN STREET
PRATTVILLE, AL 36067
334.277.9550

EDEN ELEMENTARY ADDITION
AND
COOSA VALLEY ELEMENTARY SCHOOL ADDITION
FOR
PELL CITY SCHOOLS
PELL CITY, ALABAMA

McKEE and ASSOCIATES
ARCHITECTS, INC.
631 SOUTH HULL STREET MONTGOMERY, ALABAMA 36104 (334) 834-9933

ALABAMA LICENSED 05.26.2022 No. 19907 PROFESSIONAL ENGINEER TIMOTHY N. SANFORD

SHEET TITLE : SCHEDULE OF SPECIAL INSPECTIONS

MCKEE JOB # : 21.184

PSCA # : XXX

DRAWN BY : TNS

DATE: 05.26.2022

REVISED DATE:

REVISED DATE:

REVISED DATE:

SHEET NO. : S0.3

MASONRY CONTROL JOINTS (M.C.J.) SHALL BE REQUIRED WITH SPACING SHOWN ON ARCHITECTURAL PLAN AND SHALL CONFORM TO THE FOLLOWING CRITERIA:
- AT ALL LOCATIONS SPECIFICALLY NOTED ON STRUCTURAL PLANS
- MAXIMUM SPACING OF 25' OR 3 TIMES WALL HEIGHT ALONG WALL LENGTH (WHICHEVER IS SMALLER)
- 12'-0" MAX FROM WALL CORNERS.
- AT ALL INTERSECTIONS BETWEEN SHELTER AND NON-SHELTER WALLS

EXIST F.F.E = 522.64
REF. DATUM = 0'-0"

F.F.E = 522.64
REF. DATUM = 0'-0"

4" CONC. SLAB W/ 6x6-8/8 W.W.F. ON VAPOR BARRIER ON 4" POROUS FILL ON COMPACTED "ENGINEERED FILL" (TYPICAL) U.N.O.

STEEL FABRICATED STAIR SYSTEM BY STEEL FABRICATOR

T/ FOOTING = MATCH EXIST.

FTG. STEP AS REQ'D TO MATCH EXIST.

1'-4" FTG. STEP

1 S1.1A EDEN ELEM. FOUNDATION PLAN

4'-0" 2'-0" 0' 4'-0" 8'-0"

SCALE: 1/4" = 1'-0"

NOTES:
1. FINISH FLOOR ELEVATION = REF. DATUM 0'-0"
2. SEE S0.1 & S0.2 FOR GENERAL NOTES AND TYPICAL SECTIONS.
3. SEE ARCH. FOR ALL DIMENSIONS NOT SHOWN
4. IT IS THE CONTRACTOR'S RESPONSIBILITY TO VERIFY AND COORDINATE ALL TOP OF FOOTING ELEVATIONS SHOWN ON DRAWINGS WITH FINAL GRADING PLAN. MINIMUM COVER FROM TOP OF FOOTING TO OUTSIDE FINISH GRADE SHALL BE 1'-0".
5. COORDINATE ALL SLOPES, STEPS, RECESSES, AND PLUMBING FIXTURES W/ CONTRACT DRAWINGS.

LEGEND:
- SHELTER BEARING WALLS
- SHELTER EXTENTS

EDEN ELEMENTARY ADDITION
AND
COOSA VALLEY ELEMENTARY SCHOOL ADDITION
FOR
PELL CITY SCHOOLS
PELL CITY, ALABAMA

McKEE and ASSOCIATES
ARCHITECTS, INC.
631 SOUTH HULL STREET MONTGOMERY, ALABAMA 36104 (334) 834-9933

ALABAMA LICENSED 05.26.2022 No. 33095 PROFESSIONAL ENGINEER TIMOTHY N. SHIVERS

SHEET TITLE : EDEN ELEM. FOUNDATION PLAN

MCKEE JOB # : 21.184

PSCA # : XXX

DRAWN BY : TNS

DATE: 05.26.2022

REVISED DATE:

REVISED DATE:

REVISED DATE:

DAY STRUCTURES
OUR WORK STANDS UP
141 W. MAIN STREET
PRATTVILLE, AL 36067
334.277.9550

SHEET NO. : S1.1A

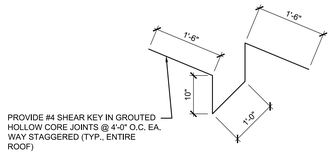

PROVIDE #4 SHEAR KEY IN GROUTED HOLLOW CORE JOINTS @ 4'-0" O.C. EA. WAY STAGGERED (TYP., ENTIRE ROOF)

A / S1.2A **SHEAR KEY BAR**

SCALE: 3/4" = 1'-0"

2 / S1.2A **EDEN ELEM. ROOF FRAMING PLAN**

4'-0" 2'-0" 0' 4'-0" 8'-0"

SCALE: 1/4" = 1'-0"

NOTES:
1. FINISH FLOOR ELEVATION = REF. DATUM 0'-0"
2. SEE S0.1 & S0.2 FOR GENERAL NOTES AND TYPICAL SECTIONS.
3. SEE ARCH. FOR ALL DIMENSIONS NOT SHOWN
4. COORDINATE ALL ROOF PENETRATIONS WITH MECH. AND ARCH. DWGS. CONTRACTOR SHALL COORDINATE OPENINGS WITH PRECAST SUPPLIER
5. THE PRECAST DESIGNER SHALL SUBMIT COMPLETE SHOP DRAWINGS INDICATING ALL RELEVANT CONSTRUCTION DETAILS AND DESIGN CALCULATIONS FOR REVIEW BY THE STRUCTURAL ENGINEER OF RECORD PRIOR TO FABRICATION.

LEGEND:
- SHELTER BEARING WALLS
- SHELTER EXTENTS

EDEN ELEMENTARY ADDITION
AND
COOSA VALLEY ELEMENTARY SCHOOL ADDITION
FOR
PELL CITY SCHOOLS
PELL CITY, ALABAMA

McKEE and ASSOCIATES
ARCHITECTS, INC.
631 SOUTH HULL STREET MONTGOMERY, ALABAMA 36104 (334) 834-9933

ALABAMA LICENSED 05.26.2022 No. 35097 PROFESSIONAL ENGINEER TIMOTHY N. SHEPPARD

SHEET TITLE : EDEN ELEM. ROOF FRAMING PLAN

MCKEE JOB # : 21.184

PSCA # : XXX

DRAWN BY : TNS

DATE: 05.26.2022

REVISED DATE:

REVISED DATE:

REVISED DATE:

DAY STRUCTURES
OUR WORK STANDS UP
141 W. MAIN STREET
PRATTVILLE, AL 36067
334.277.9550

SHEET NO. : S1.2A

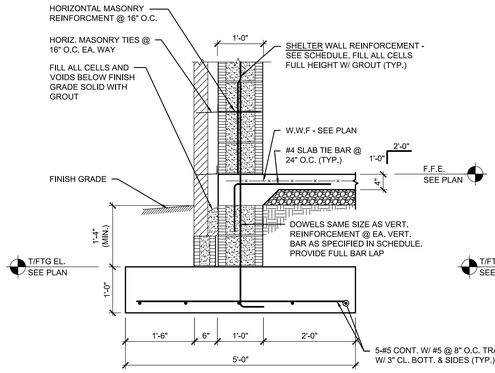

1 S3.1A **SECTION (SHELTER)**

SCALE: 3/4" = 1'-0"

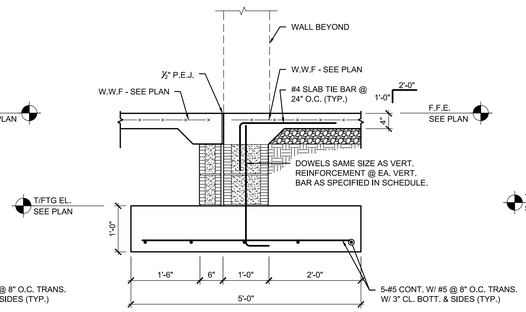

2 S3.1A **SECTION (SHELTER)**

SCALE: 3/4" = 1'-0"

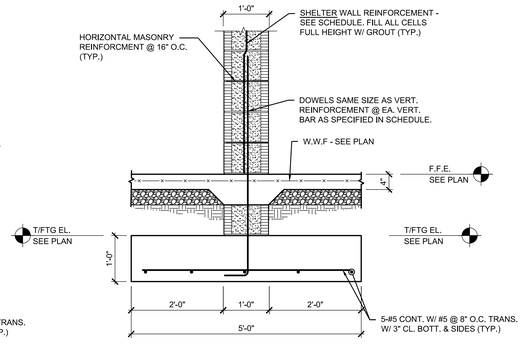

3 S3.1A **(SHELTER) SECTION**

SCALE: 3/4" = 1'-0"

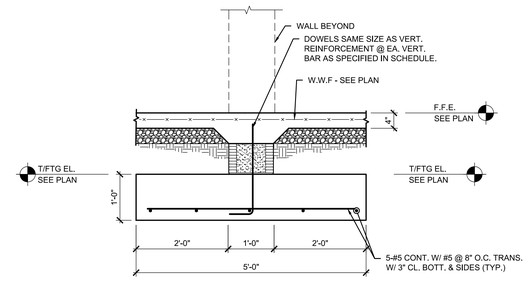

4 S3.1A **(SHELTER) SECTION**

SCALE: 3/4" = 1'-0"

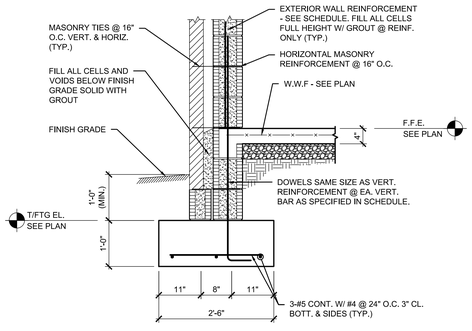

5 S3.1A **SECTION**

SCALE: 3/4" = 1'-0"

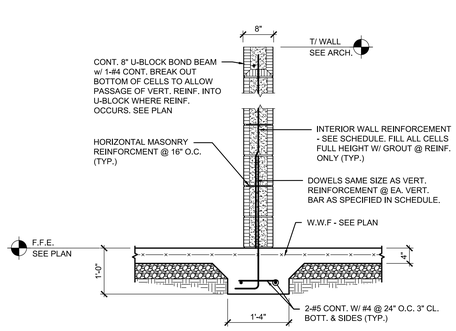

6 S3.1A **SECTION**

SCALE: 3/4" = 1'-0"

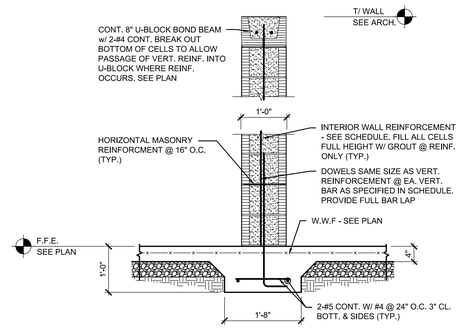

7 S3.1A **SECTION**

SCALE: 3/4" = 1'-0"

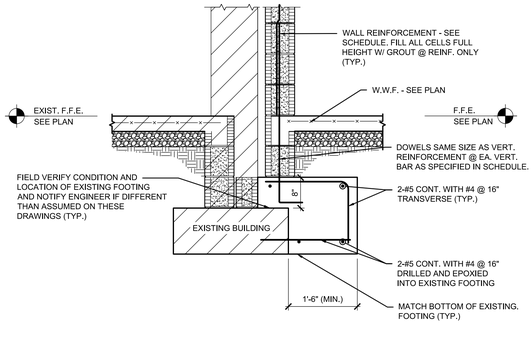

8 S3.1A **SECTION**

SCALE: 3/4" = 1'-0"

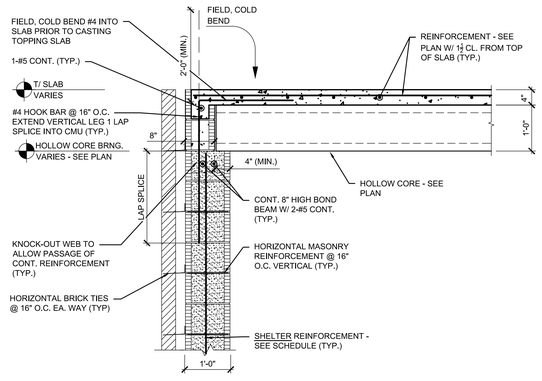

9 S3.1A **(SHELTER) SECTION**

SCALE: 3/4" = 1'-0"

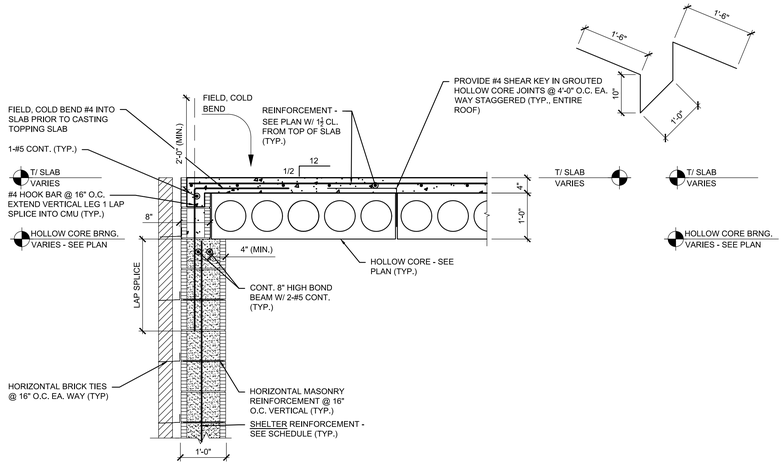

10 S3.1A **(SHELTER) SECTION**

SCALE: 3/4" = 1'-0"

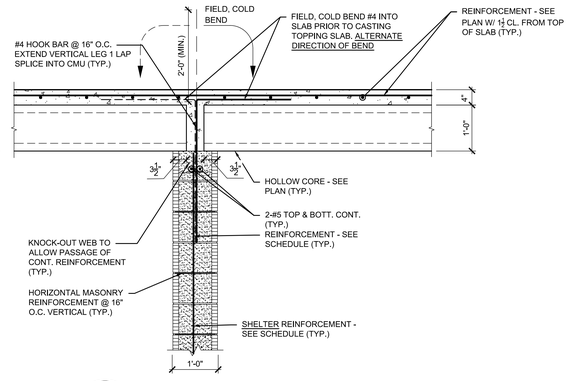

11 S3.1A **(SHELTER) SECTION**

SCALE: 3/4" = 1'-0"

EDEN ELEMENTARY ADDITION
AND
COOSA VALLEY ELEMENTARY SCHOOL ADDITION
FOR
PELL CITY SCHOOLS
PELL CITY, ALABAMA

McKEE and ASSOCIATES
ARCHITECTS, INC.
631 SOUTH HULL STREET MONTGOMERY, ALABAMA 36104 (334) 834-9933

ALABAMA LICENSED 05.26.2022 No. 35907 PROFESSIONAL ENGINEER TIMOTHY N. SANFORD

SHEET TITLE :	EDEN ELEM. ROOF SECTIONS
MCKEE JOB # :	21.184
PSCA # :	XXX
DRAWN BY :	TNS
DATE:	05.26.2022
REVISED DATE:	
REVISED DATE:	
REVISED DATE:	

DAY STRUCTURES
OUR WORK STANDS UP
141 W. MAIN STREET
PRATTVILLE, AL 36067
334.277.9550

SHEET NO. : S3.1A

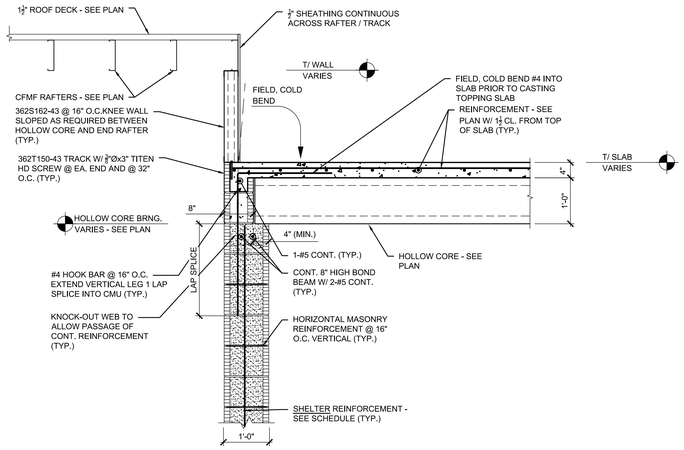

12 S3.2A **(SHELTER) SECTION**

SCALE: 3/4" = 1'-0"

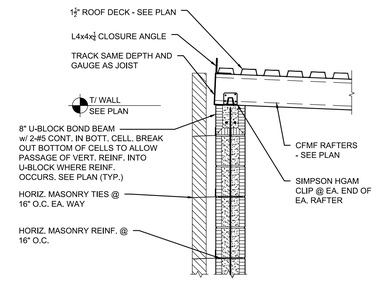

13 S3.2A **SECTION**

SCALE: 3/4" = 1'-0"

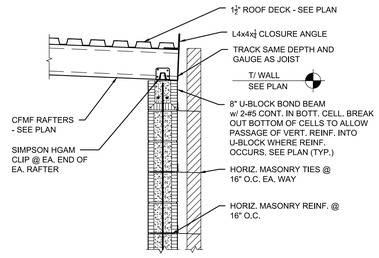

14 S3.2A **SECTION**

SCALE: 3/4" = 1'-0"

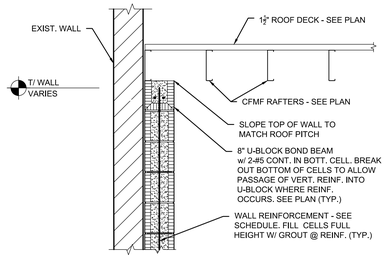

15 S3.2A **SECTION**

SCALE: 3/4" = 1'-0"

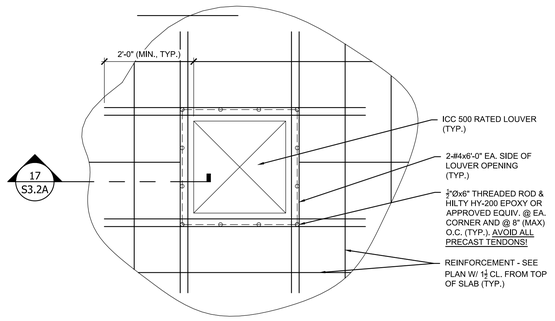

16 S3.2A **(SHELTER) LOUVER OPENING DETAIL PLAN**

SCALE: 3/4" = 1'-0"

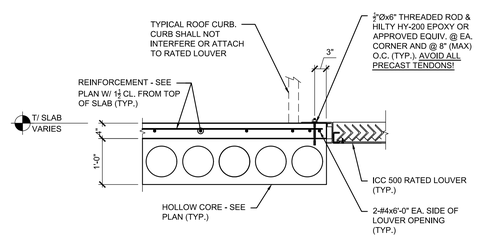

17 S3.2A **(SHELTER) LOUVER OPENING SECTION**

SCALE: 3/4" = 1'-0"

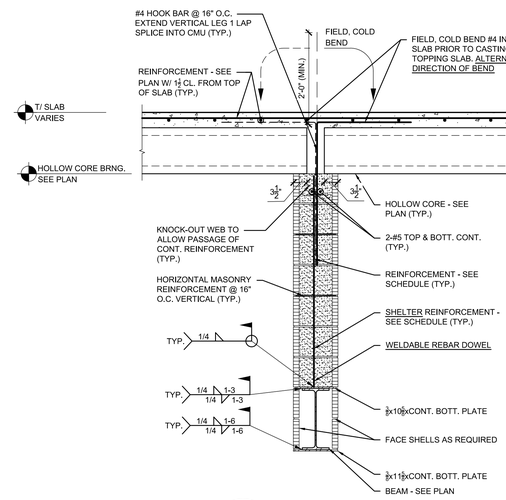

18 S3.2A **SECTION**

SCALE: 3/4" = 1'-0"

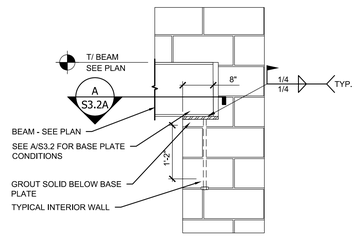

19 S3.2A **SECTION (SHELTER)**

SCALE: 3/4" = 1'-0"

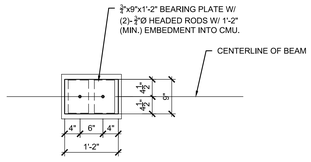

A S3.2A **DETAIL (SHELTER)**

SCALE: 3/4" = 1'-0"

EDEN ELEMENTARY ADDITION
AND
COOSA VALLEY ELEMENTARY SCHOOL ADDITION
FOR
PELL CITY SCHOOLS
PELL CITY, ALABAMA

McKEE and ASSOCIATES
ARCHITECTS, INC.
631 SOUTH HULL STREET MONTGOMERY, ALABAMA 36104 (334) 834-9933

ALABAMA LICENSED 05.26.2022 No. 35097 PROFESSIONAL ENGINEER TIMOTHY N. SHEFFIELD

SHEET TITLE : EDEN ELEM. ROOF SECTIONS

MCKEE JOB # : 21.184

PSCA # : XXX

DRAWN BY : TNS

DATE: 05.26.2022

REVISED DATE:

REVISED DATE:

REVISED DATE:

DAY STRUCTURES
OUR WORK STANDS UP
141 W. MAIN STREET
PRATTVILLE, AL 36067
334.277.9550

SHEET NO. : S3.2A

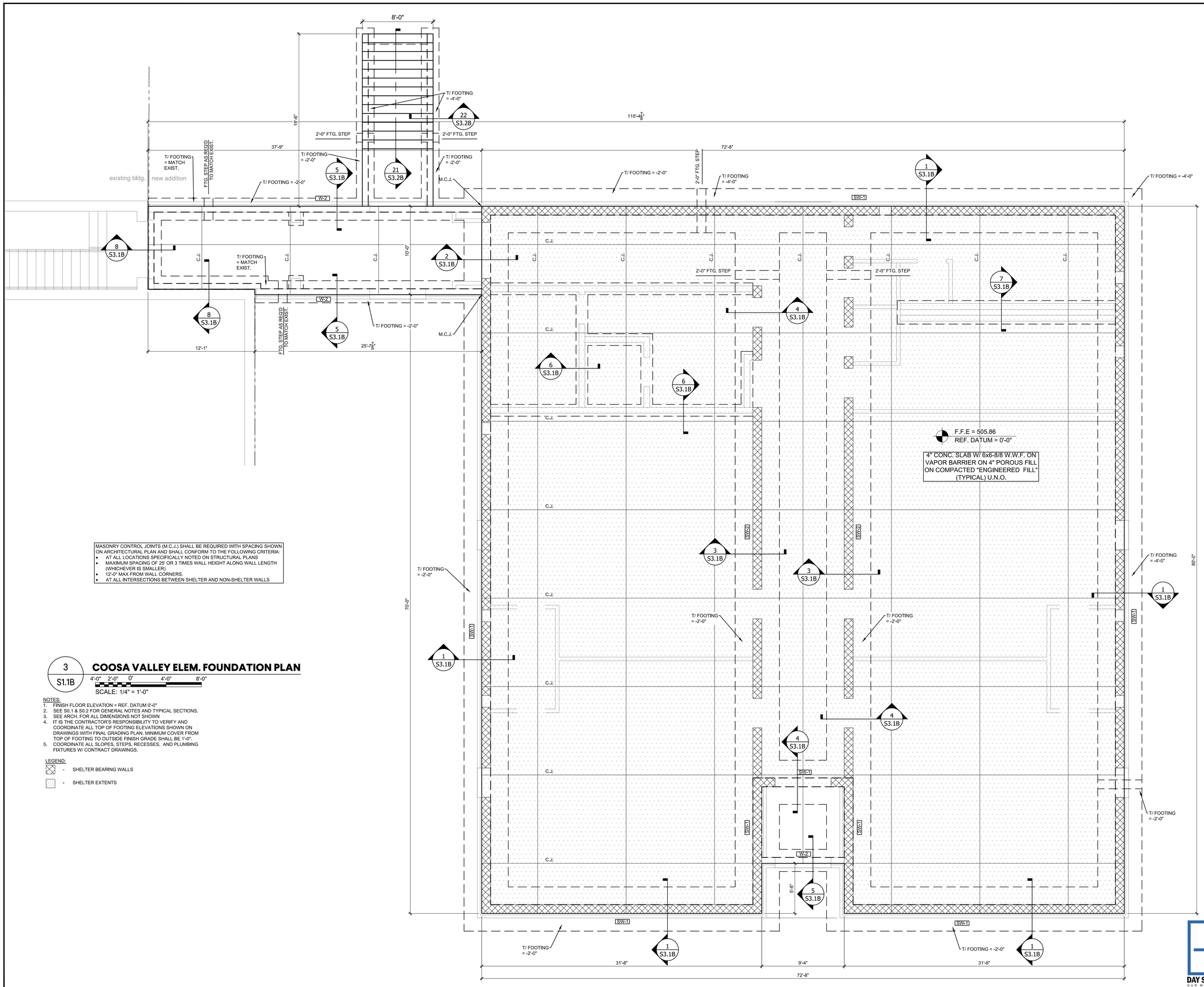

MASONRY CONTROL JOINTS (M.C.J.) SHALL BE REQUIRED WITH SPACING SHOWN ON ARCHITECTURAL PLAN AND SHALL CONFORM TO THE FOLLOWING CRITERIA:
- AT ALL LOCATIONS SPECIFICALLY NOTED ON STRUCTURAL PLANS
- MAXIMUM SPACING OF 25' O/R 3 TIMES WALL HEIGHT ALONG WALL LENGTH (WHICHEVER IS SMALLER)
- 12'-0" MAX FROM WALL CORNERS.
- AT ALL INTERSECTIONS BETWEEN SHELTER AND NON-SHELTER WALLS

3 / S1.1B **COOSA VALLEY ELEM. FOUNDATION PLAN**

4'-0" 2'-0" 0' 4'-0" 8'-0"

SCALE: 1/4" = 1'-0"

NOTES:
1. FINISH FLOOR ELEVATION = REF. DATUM 0'-0"
2. SEE S0.1 & S0.2 FOR GENERAL NOTES AND TYPICAL SECTIONS.
3. SEE ARCH. FOR ALL DIMENSIONS NOT SHOWN
4. IT IS THE CONTRACTOR'S RESPONSIBILITY TO VERIFY AND COORDINATE ALL TOP OF FOOTING ELEVATIONS SHOWN ON DRAWINGS WITH FINAL GRADING PLAN. MINIMUM COVER FROM TOP OF FOOTING TO OUTSIDE FINISH GRADE SHALL BE 1'-0".
5. COORDINATE ALL SLOPES, STEPS, RECESSES, AND PLUMBING FIXTURES W/ CONTRACT DRAWINGS.

LEGEND:

- SHELTER BEARING WALLS
- SHELTER EXTENTS

EDEN ELEMENTARY ADDITION
AND
COOSA VALLEY ELEMENTARY SCHOOL ADDITION
FOR
PELL CITY SCHOOLS
PELL CITY, ALABAMA

McKEE and ASSOCIATES
ARCHITECTS, INC.
631 SOUTH HULL STREET MONTGOMERY, ALABAMA 36104 (334) 834-9933

ALABAMA LICENSED 05.26.2022 No. 35907 PROFESSIONAL ENGINEER TIMOTHY N. SANFORD

SHEET TITLE :	COOSA VALLEY ELEM. FOUNDATION PLAN
MCKEE JOB # :	21.184
PSCA # :	XXX
DRAWN BY :	TNS
DATE:	05.26.2022
REVISED DATE:	
REVISED DATE:	
REVISED DATE:	

DAY STRUCTURES
OUR WORK STANDS UP
141 W. MAIN STREET
PRATTVILLE, AL 36067
334.277.9550

SHEET NO. : S1.1B

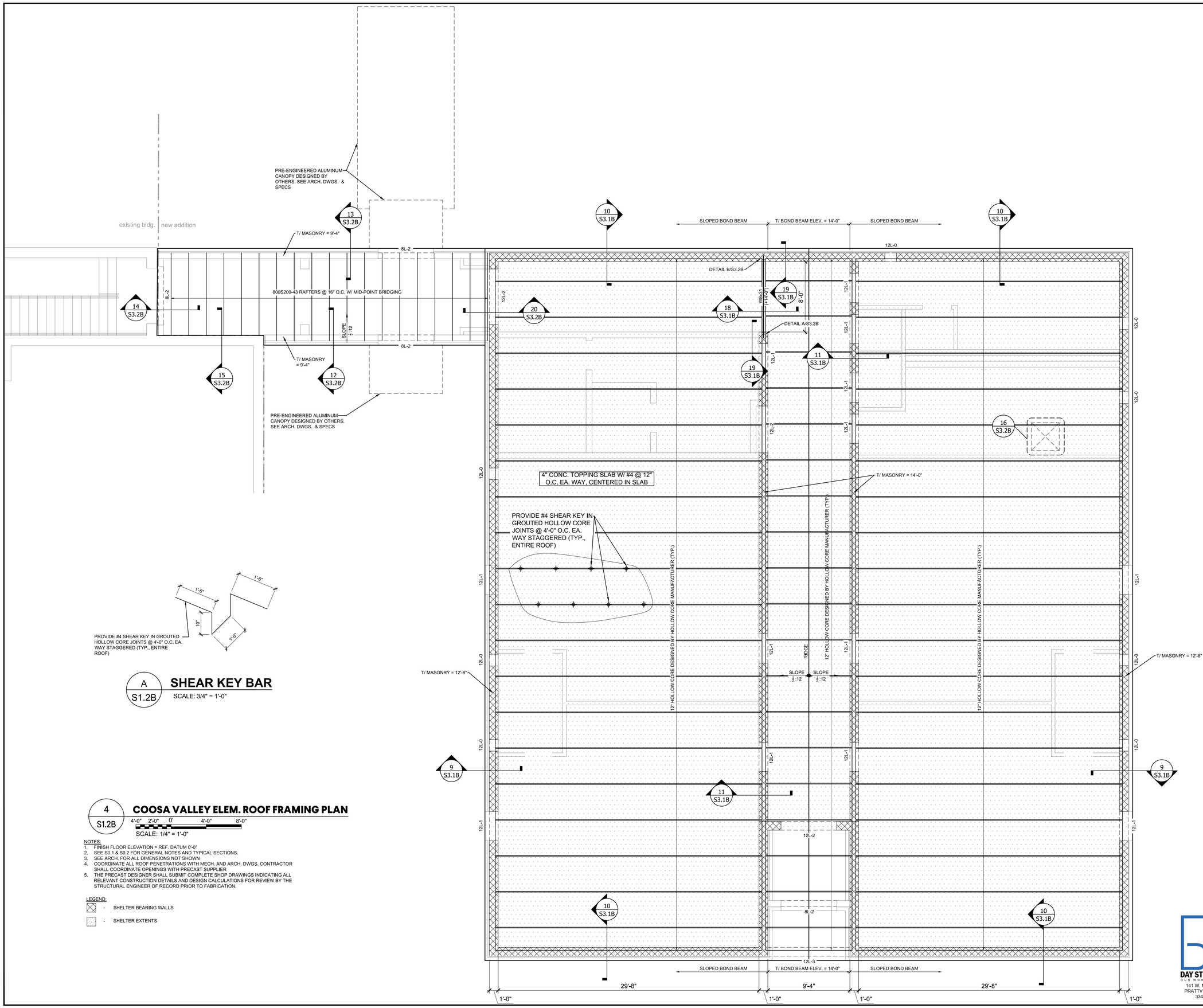

A / S1.2B **SHEAR KEY BAR**

SCALE: 3/4" = 1'-0"

4 / S1.2B **COOSA VALLEY ELEM. ROOF FRAMING PLAN**

4'-0" 2'-0" 0' 4'-0" 8'-0"

SCALE: 1/4" = 1'-0"

NOTES:
1. FINISH FLOOR ELEVATION = REF. DATUM 0'-0"
2. SEE S0.1 & S0.2 FOR GENERAL NOTES AND TYPICAL SECTIONS.
3. SEE ARCH. FOR ALL DIMENSIONS NOT SHOWN
4. COORDINATE ALL ROOF PENETRATIONS WITH MECH. AND ARCH. DWGS. CONTRACTOR SHALL COORDINATE OPENINGS WITH PRECAST SUPPLIER
5. THE PRECAST DESIGNER SHALL SUBMIT COMPLETE SHOP DRAWINGS INDICATING ALL RELEVANT CONSTRUCTION DETAILS AND DESIGN CALCULATIONS FOR REVIEW BY THE STRUCTURAL ENGINEER OF RECORD PRIOR TO FABRICATION.

LEGEND:
- SHELTER BEARING WALLS
- SHELTER EXTENTS

EDEN ELEMENTARY ADDITION
AND
COOSA VALLEY ELEMENTARY SCHOOL ADDITION
FOR
PELL CITY SCHOOLS
PELL CITY, ALABAMA

McKEE and ASSOCIATES
ARCHITECTS, INC.
631 SOUTH HULL STREET MONTGOMERY, ALABAMA 36104 (334) 834-9933

ALABAMA LICENSED 05.26.2022 No. 36007 PROFESSIONAL ENGINEER TIMOTHY N. SANFORD

SHEET TITLE :	COOSA VALLEY ELEM. ROOF FRAMING PLAN
MCKEE JOB # :	21.184
PSCA # :	XXX
DRAWN BY :	TNS
DATE:	05.26.2022
REVISED DATE:	
REVISED DATE:	
REVISED DATE:	

DAY STRUCTURES
OUR WORK STANDS UP
141 W. MAIN STREET
PRATTVILLE, AL 36067
334.277.9550

SHEET NO. : S1.2B

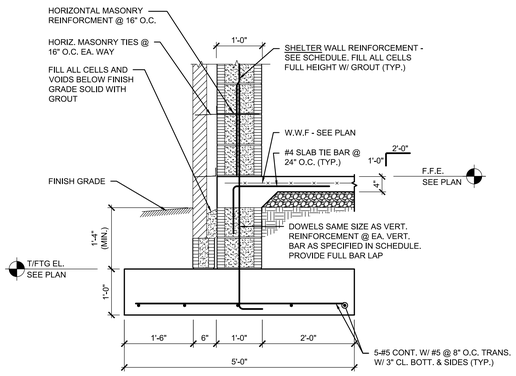

1 S3.1B **SECTION (SHELTER)**
SCALE: 3/4" = 1'-0"

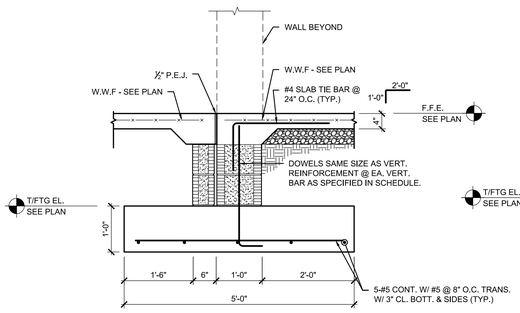

2 S3.1B **SECTION (SHELTER)**
SCALE: 3/4" = 1'-0"

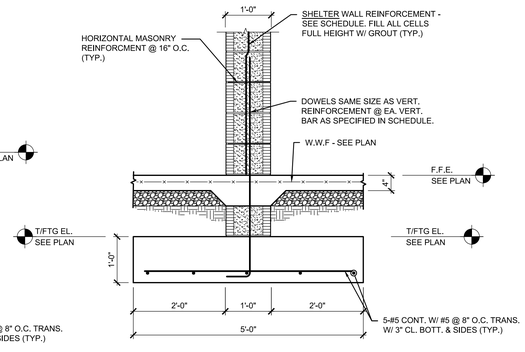

3 S3.1B **(SHELTER) SECTION**
SCALE: 3/4" = 1'-0"

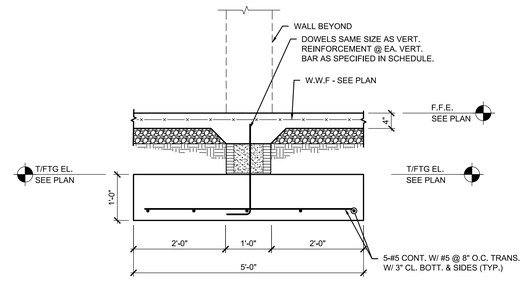

4 S3.1B **(SHELTER) SECTION**
SCALE: 3/4" = 1'-0"

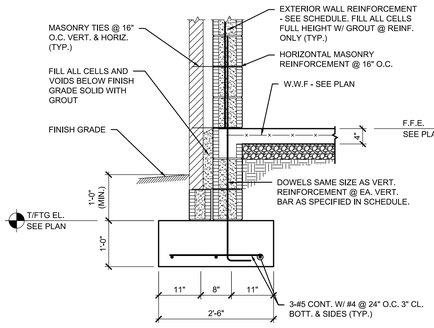

5 S3.1B **SECTION**
SCALE: 3/4" = 1'-0"

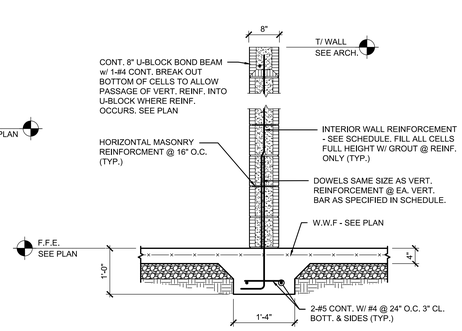

6 S3.1B **SECTION**
SCALE: 3/4" = 1'-0"

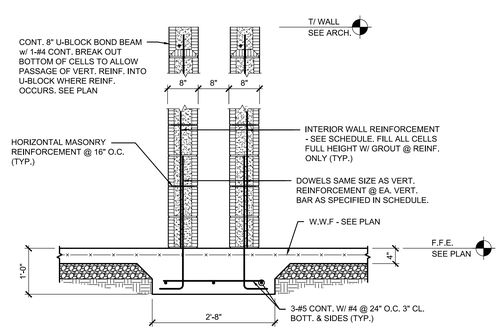

7 S3.1B **SECTION**
SCALE: 3/4" = 1'-0"

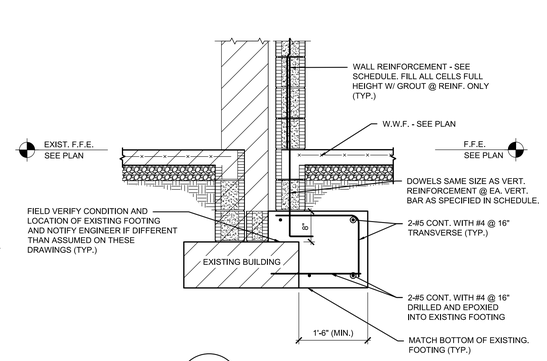

8 S3.1B **SECTION**
SCALE: 3/4" = 1'-0"

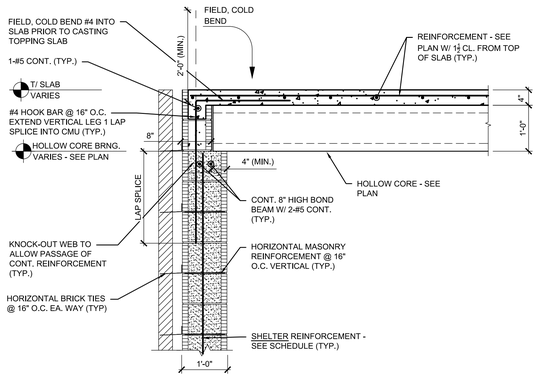

9 S3.1B **(SHELTER) SECTION**
SCALE: 3/4" = 1'-0"

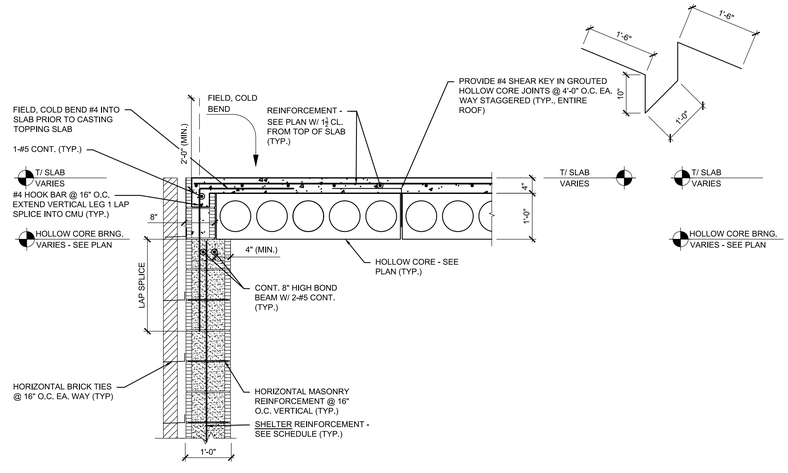

10 S3.1B **(SHELTER) SECTION**
SCALE: 3/4" = 1'-0"

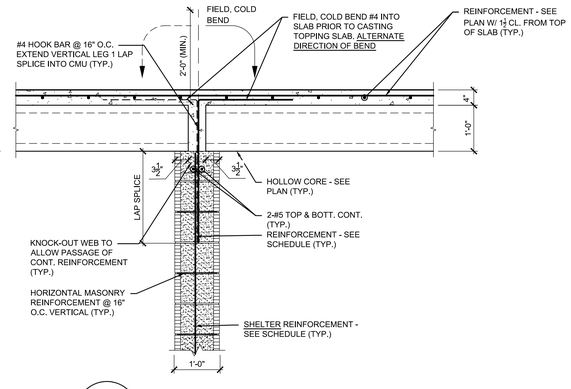

11 S3.1B **(SHELTER) SECTION**
SCALE: 3/4" = 1'-0"

EDEN ELEMENTARY ADDITION
AND
COOSA VALLEY ELEMENTARY SCHOOL ADDITION
FOR
PELL CITY SCHOOLS
PELL CITY, ALABAMA

McKEE and ASSOCIATES
ARCHITECTS, INC.
631 SOUTH HULL STREET MONTGOMERY, ALABAMA 36104 (334) 834-9933

ALABAMA LICENSED 05.26.2022 No. 39007 PROFESSIONAL ENGINEER TIMOTHY N. SANFORD

SHEET TITLE :	COOSA VALLEY ELEM. SECTIONS
MCKEE JOB # :	21.184
PSCA # :	XXX
DRAWN BY :	TNS
DATE:	05.26.2022
REVISED DATE:	
REVISED DATE:	
REVISED DATE:	

DAY STRUCTURES
OUR WORK STANDS UP
141 W. MAIN STREET
PRATTVILLE, AL 36067
334.277.9550

SHEET NO. : S3.1B

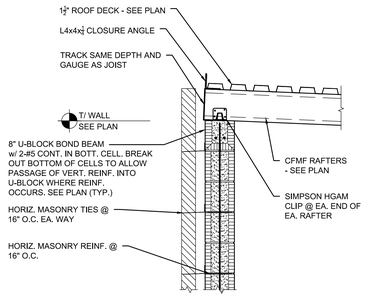

12 S3.2B **SECTION**
SCALE: 3/4" = 1'-0"

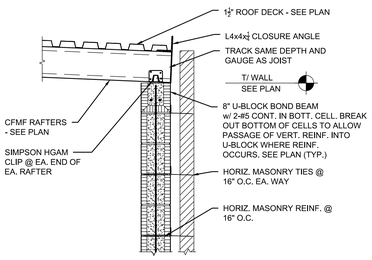

13 S3.2B **SECTION**
SCALE: 3/4" = 1'-0"

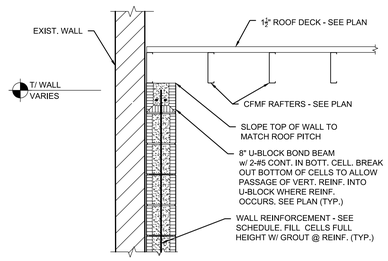

14 S3.2B **SECTION**
SCALE: 3/4" = 1'-0"

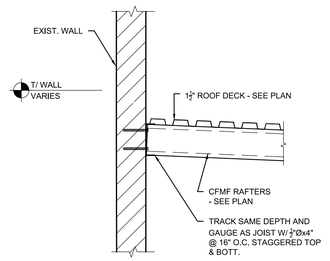

15 S3.2B **SECTION**
SCALE: 3/4" = 1'-0"

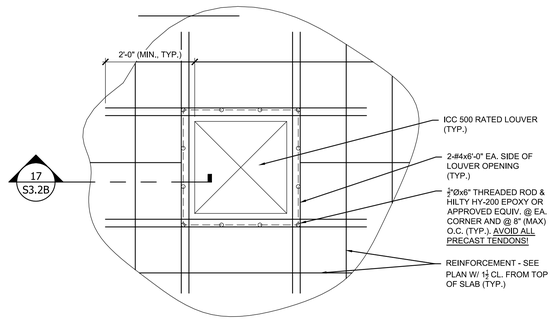

16 S3.2B **(SHELTER) LOUVER OPENING DETAIL PLAN**
SCALE: 3/4" = 1'-0"

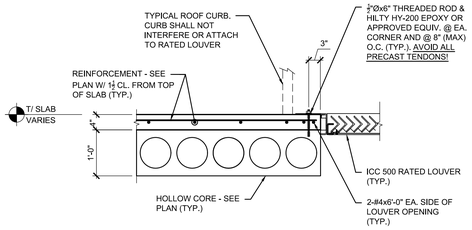

17 S3.2B **(SHELTER) LOUVER OPENING SECTION**
SCALE: 3/4" = 1'-0"

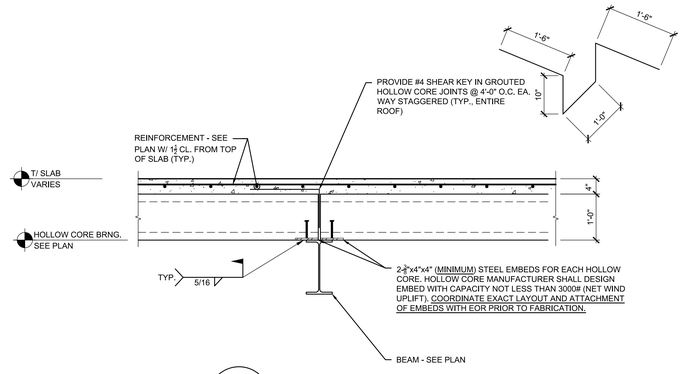

18 S3.2B **SECTION**
SCALE: 3/4" = 1'-0"

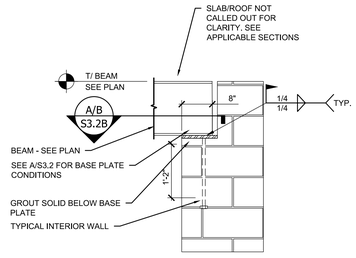

19 S3.2B **SECTION (SHELTER)**
SCALE: 3/4" = 1'-0"

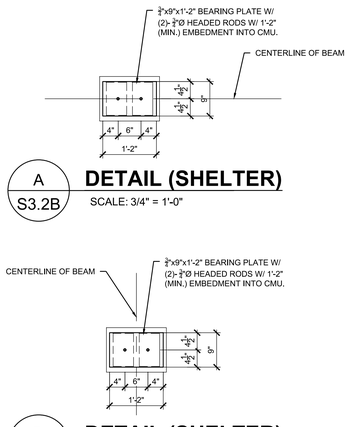

A S3.2B **DETAIL (SHELTER)**
SCALE: 3/4" = 1'-0"

B S3.2 **DETAIL (SHELTER)**
SCALE: 3/4" = 1'-0"

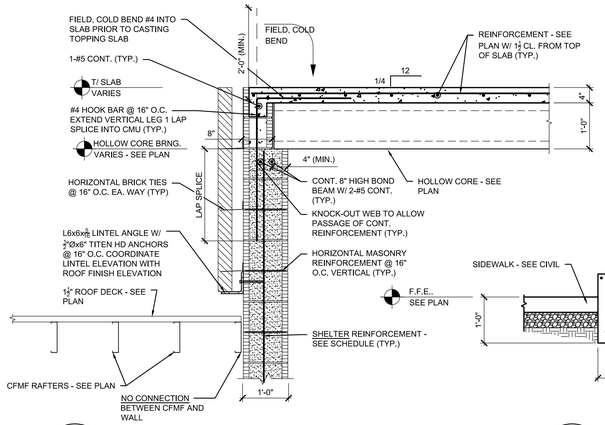

20 S3.2B **SECTION (SHELTER)**
SCALE: 3/4" = 1'-0"

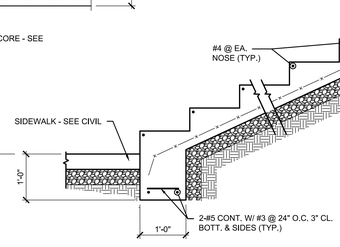

21 S3.2B **SECTION**
SCALE: 3/4" = 1'-0"

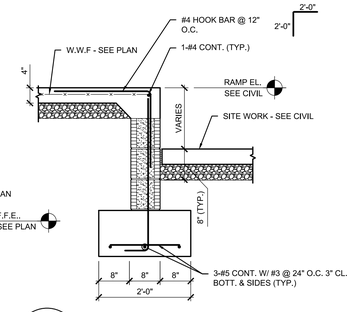

22 S3.2B **SECTION**
SCALE: 3/4" = 1'-0"

EDEN ELEMENTARY ADDITION
AND
COOSA VALLEY ELEMENTARY SCHOOL ADDITION
FOR
PELL CITY SCHOOLS
PELL CITY, ALABAMA

McKEE and ASSOCIATES
ARCHITECTS, INC.
631 SOUTH HULL STREET MONTGOMERY, ALABAMA 36104 (334) 834-9933

ALABAMA LICENSED 05.26.2022 No. 33091 PROFESSIONAL ENGINEER TIMOTHY N. SANFORD

SHEET TITLE : COOSA VALLEY ELEM. SECTIONS

MCKEE JOB # : 21.184

PSCA # : XXX

DRAWN BY : TNS

DATE: 05.26.2022

REVISED DATE:

REVISED DATE:

REVISED DATE:

DAY STRUCTURES
OUR WORK STANDS UP
141 W. MAIN STREET
PRATTVILLE, AL 36067
334.277.9550

SHEET NO. : S3.2B