VOLUME 1 of 2

US Army Corps
of Engineers®

MOBILE DISTRICT
109 SAINT JOSEPH STREET
MOBILE AL 36602

ARTC (B640) RENOVATION, CDP, FEMA

ANNISTON, ALABAMA

MOBILE DISTRICT PROJECT CODE : SEH22002

SOLICITATION NUMBER : W9127822R0048

JUNE 2022

PROJECT C - ARTC (B640) RENOVATION
ADVANCED RESPONDER TRAINING COMPLEX
CENTER FOR DOMESTIC PREPAREDNESS

ANNISTON, ALABAMA

VOLUME - 1

CONTRACT NO.: W9127818D038
TASK ORDER NO.: W9127820F0201

READY TO ADVERTISE
(RTA) SUBMITTAL

29 JUNE 2021

US Army Corps of Engineers
Mobile District

Symbol	No.	Description	Date	Approved
		Revisions		

STATE OF ALABAMA
PAUL L ZANGLIN
7135
06/29/2021
REGISTERED ARCHITECT

Designed By: JCV	Date: 06-29-2021
Drawn By: JCV	File No.
Checked By: PZ	I.S.O. Sheet File Name:
Reviewed By:	Solicitation Number:

U.S. ARMY ENGINEER DISTRICT
CORPS OF ENGINEERS
MOBILE, ALABAMA

ss&a
CLARKNEXSEN

ARTC - B640 RENOVATION
FEMA - DHS - CDP, ANNISTON, AL

COVER SHEET - VOLUME 1

SHEET IDENTIFICATION
G-101
SHEET 1 of 442

C:\Users\VShayla.Stewart\Documents\20002 - A_VShayla.Stewart.rvt
6/29/2021 1:30:41 PM

INDEX OF DRAWINGS - VOLUME 1

SEQUENCE NO.			SHEET NO.	SHEET DESCRIPTION
01 - GENERAL				
1	OF	442	G-101	COVER SHEET - VOLUME 1
2	OF	442	G-102	INDEX OF DRAWINGS - VOLUME 1
3	OF	442	G-103	INDEX OF DRAWINGS - VOLUME 2
4	OF	442	G-110	LIFE SAFETY NOTES
5	OF	442	G-111	LIFE SAFETY PLAN
02 - HAZARDOUS MATERIALS				
6	OF	442	H-101	ABATEMENT NOTES
7	OF	442	H-151	EXISTING ROOF PLAN
8	OF	442	H-152	EXISTING FIRST FLOOR PLAN
9	OF	442	H-153	EXISTING FIRST FLOOR PLAN
03 - CIVIL				
10	OF	442	C-001	PROJECT VICINITY MAP
11	OF	442	C-002	GENERAL NOTES
12	OF	442	C-003	GENERAL NOTES, LEGEND, & ABBREVIATIONS
13	OF	442	VF101	EXISTING CONDITIONS SURVEY
14	OF	442	CD101	SITE DEMOLITION PLAN
15	OF	442	CS101	SITE PLAN
16	OF	442	CS102	SITE PLAN OF MAIN ENTRANCE
17	OF	442	CS501	MISCELLANEOUS DETAILS
18	OF	442	CS502	MISCELLANEOUS DETAILS
19	OF	442	CS503	EQUIPMENT PAD DETAILS
20	OF	442	CS504	MISCELLANEOUS DETAILS
21	OF	442	CS505	HANDICAP PARKING DETAILS
22	OF	442	CU101	SITE UTILITY PLAN
23	OF	442	CU501	MISCELLANEOUS UTILITY DETAILS
24	OF	442	CU502	WATER DETAILS
25	OF	442	CU503	MISCELLANEOUS DETAILS
26	OF	442	CE101	SEDIMENT AND EROSION CONTROL PLAN
05 - STRUCTURAL				
27	OF	442	S-001	GENERAL STRUCTURAL NOTES
28	OF	442	S-002	ABBREVIATIONS & LEGEND
29	OF	442	S-003	TYPICAL DETAILS
30	OF	442	S-004	TYPICAL DETAILS
31	OF	442	S-005	TYPICAL DETAILS
32	OF	442	S-006	WIND UPLIFT PRESSURES AT ROOF
33	OF	442	S-111	FOUNDATION AND SLAB ON GROUND PLAN - COMPOSITE
34	OF	442	S-112	FOUNDATION AND SLAB ON GROUND PLAN - BLOCK A AND BLOCK B
35	OF	442	S-121	ROOF FRAMING PLAN - COMPOSITE
36	OF	442	S-122	ROOF FRAMING PLAN - BLOCK A AND BLOCK B
37	OF	442	S-131	OVERALL ROOF PLAN
38	OF	442	S-132	NEW CONCRETE FILL SLAB ON GROUND PLAN
39	OF	442	S-401	EXISTING CONNECTING COORIDOR ROOF DEMOLITION PLAN
40	OF	442	S-402	ENLARGED RAMP PLAN & DETAILS
41	OF	442	S-403	FOUNDATION AND SLAB ON GROUND PLAN - MECH. ROOM 321
42	OF	442	S-404	FOUNDATION AND SLAB ON GROUND PLAN - ROOM 122
43	OF	442	S-405	FOUNDATION AND SLAB ON GROUND PLAN - ROOM 315
44	OF	442	S-406	MECHANICAL YARD - SCREEN WALLS
45	OF	442	S-407	ENLARGED MEZZANINE FRAMING PLAN
46	OF	442	S-501	DETAILS
47	OF	442	S-502	DETAILS
48	OF	442	S-503	DETAILS
49	OF	442	S-504	DETAILS
50	OF	442	S-505	DETAILS

SEQUENCE NO.			SHEET NO.	SHEET DESCRIPTION
06 - ARCHITECTURAL				
51	OF	442	A-001	ABBREVIATIONS AND SYMBOLS
52	OF	442	A-002	COMPOSITE BID OPTIONS PLAN
53	OF	442	AD111	FIRST FLOOR DEMO PLAN - COMPOSITE
54	OF	442	AD112	DEMO PLAN - BLOCK 1A
55	OF	442	AD113	DEMO PLAN - BLOCK 1B
56	OF	442	AD114	DEMO PLAN - BLOCK 1C
57	OF	442	AD115	DEMO PLAN - BLOCK 1D
58	OF	442	AD116	DEMO PLAN - BLOCK 1F
59	OF	442	AD117	DEMO PLAN - BLOCK 1G
60	OF	442	AD118	DEMO PLAN - BLOCK 1H
61	OF	442	AD119	DEMO PLAN - BLOCK 1J
62	OF	442	AD120	DEMO PLAN - BLOCK 1K
63	OF	442	AD121	DEMO PLAN - BLOCK 1L
64	OF	442	AD122	DEMO PLAN - BLOCK 1M
65	OF	442	AD123	DEMO PLAN - BLOCK 1N
66	OF	442	AD201	DEMO - EXTERIOR ELEVATIONS
67	OF	442	AD202	DEMO - EXTERIOR ELEVATIONS
68	OF	442	A-111	FIRST FLOOR PLAN - COMPOSITE
69	OF	442	A-112	FLOOR PLAN - BLOCK 1A
70	OF	442	A-113	FLOOR PLAN - BLOCK 1B
71	OF	442	A-114	FLOOR PLAN - BLOCK 1C
72	OF	442	A-115	FLOOR PLAN - BLOCK 1D
73	OF	442	A-116	FLOOR PLAN - BLOCK 1F
74	OF	442	A-117	FLOOR PLAN - BLOCK 1G
75	OF	442	A-118	FLOOR PLAN - BLOCK 1H
76	OF	442	A-119	FLOOR PLAN - BLOCK 1J
77	OF	442	A-120	FLOOR PLAN - BLOCK 1K
78	OF	442	A-121	FLOOR PLAN - BLOCK 1L
79	OF	442	A-122	FLOOR PLAN - BLOCK 1M
80	OF	442	A-123	FLOOR PLAN - BLOCK 1N
81	OF	442	A-131	MEZZANINE PLAN
82	OF	442	A-132	CLERESTORY PLAN
83	OF	442	A-151	ROOF PLAN - COMPOSITE
84	OF	442	A-152	ROOF DETAILS
85	OF	442	A-153	ROOF DETAILS
86	OF	442	A-155	COVERED SIDEWALK / EXTERIOR BREAK AREA PLANS
87	OF	442	A-156	EXTERIOR BREAK AREA ELEVATIONS
88	OF	442	A-201	EXTERIOR ELEVATIONS
89	OF	442	A-202	EXTERIOR ELEVATIONS
90	OF	442	A-251	INTERIOR ELEVATIONS
91	OF	442	A-252	INTERIOR ELEVATIONS
92	OF	442	A-253	INTERIOR ELEVATIONS
93	OF	442	A-254	INTERIOR ELEVATIONS
94	OF	442	A-255	INTERIOR ELEVATIONS
95	OF	442	A-256	INTERIOR ELEVATIONS
96	OF	442	A-257	INTERIOR ELEVATIONS
97	OF	442	A-301	BUILDING SECTIONS
98	OF	442	A-310	WALL SECTIONS
99	OF	442	A-311	WALL SECTIONS
100	OF	442	A-312	WALL SECTIONS
101	OF	442	A-313	WALL SECTIONS
102	OF	442	A-314	WALL SECTIONS
103	OF	442	A-315	WALL SECTIONS
104	OF	442	A-316	WALL SECTIONS
105	OF	442	A-317	WALL SECTIONS
106	OF	442	A-400	TYPICAL MOUNTING HEIGHTS
107	OF	442	A-401	ENLARGED FLOOR PLANS ELEVATIONS & SECTIONS
108	OF	442	A-411	ENLARGED WET AREA PLANS & ELEVATIONS
109	OF	442	A-412	ENLARGED WET AREA ELEVATIONS
110	OF	442	A-413	ENLARGED WET AREA PLANS & ELEVATIONS
111	OF	442	A-414	ENLARGED WET AREA PLANS & ELEVATIONS
112	OF	442	A-430	CASEWORK ELEVATIONS
113	OF	442	A-501	EXTERIOR DETAILS
114	OF	442	A-502	EXTERIOR DETAILS
115	OF	442	A-503	EXTERIOR DETAILS
116	OF	442	A-504	MECHANICAL YARD GATE ELEVATION AND DETAILS

SEQUENCE NO.			SHEET NO.	SHEET DESCRIPTION
117	OF	442	A-540	TYPICAL INTERIOR FRAMING DETAILS
118	OF	442	A-541	TYPICAL INTERIOR FRAMING DETAILS
119	OF	442	A-542	INTERIOR DETAILS
120	OF	442	A-543	INTERIOR DETAILS
121	OF	442	A-544	INTERIOR DETAILS
122	OF	442	A-546	INTERIOR DETAILS
123	OF	442	A-550	INTERIOR WALL TYPES
124	OF	442	A-551	INTERIOR WALL TYPES
125	OF	442	A-561	INTERIOR COLUMN DETAILS
126	OF	442	A-562	INTERIOR COLUMN DETAILS
127	OF	442	A-563	INTERIOR COLUMN DETAILS
128	OF	442	A-564	INTERIOR COLUMN DETAILS
129	OF	442	A-565	INTERIOR COLUMN DETAILS
130	OF	442	A-566	INTERIOR COLUMN DETAILS
131	OF	442	A-601	DOOR SCHEDULE
132	OF	442	A-605	DOOR AND FRAME TYPES
133	OF	442	A-610	DOOR DETAILS
134	OF	442	A-611	DOOR DETAILS
135	OF	442	A-621	WINDOW TYPES
136	OF	442	A-622	WINDOW TYPES
137	OF	442	A-630	WINDOW DETAILS
138	OF	442	A-631	WINDOW DETAILS
139	OF	442	A-660	FINISH SCHEDULE
140	OF	442	A-665	FINISH LEGEND
141	OF	442	A-680	EQUIPMENT SCHEDULE
142	OF	442	A-701	ENLARGED STAIR PLANS & SECTIONS
143	OF	442	A-702	ENLARGED STAIR PLANS & SECTIONS
144	OF	442	A-703	EXTERIOR RAMP & STAIR SECTIONS
145	OF	442	A-811	REFLECTED CEILING PLAN - COMPOSITE
146	OF	442	A-812	REFLECTED CEILING PLAN - BLOCK 1A
147	OF	442	A-813	REFLECTED CEILING PLAN - BLOCK 1B
148	OF	442	A-814	REFLECTED CEILING PLAN - BLOCK 1C
149	OF	442	A-815	REFLECTED CEILING PLAN - BLOCK 1D
150	OF	442	A-816	REFLECTED CEILING PLAN - BLOCK 1F
151	OF	442	A-817	REFLECTED CEILING PLAN - BLOCK 1G
152	OF	442	A-818	REFLECTED CEILING PLAN - BLOCK 1H
153	OF	442	A-819	REFLECTED CEILING PLAN - BLOCK 1J
154	OF	442	A-820	REFLECTED CEILING PLAN - BLOCK 1K
155	OF	442	A-821	REFLECTED CEILING PLAN - BLOCK 1L
156	OF	442	A-822	REFLECTED CEILING PLAN - BLOCK 1M
157	OF	442	A-823	REFLECTED CEILING PLAN - BLOCK 1N
158	OF	442	A-831	REFLECTED CEILING PLAN - MEZZANINE COMPOSITE
159	OF	442	A-832	ARTC HALL VERIFICATION
160	OF	442	A-850	CEILING DETAILS
161	OF	442	AF112	FINISH PATTERN PLAN - BLOCK 1A
162	OF	442	AF113	FINISH PATTERN PLAN - BLOCK 1B
163	OF	442	AF114	FINISH PATTERN PLAN - BLOCK 1C
164	OF	442	AF115	FINISH PATTERN PLAN - BLOCK 1D
165	OF	442	AF116	FINISH PATTERN PLAN - BLOCK 1F
166	OF	442	AF117	FINISH PATTERN PLAN - BLOCK 1G
167	OF	442	AF118	FINISH PATTERN PLAN - BLOCK 1H
168	OF	442	AF119	FINISH PATTERN PLAN - BLOCK 1J
169	OF	442	AF120	FINISH PATTERN PLAN - BLOCK 1K
170	OF	442	AF121	FINISH PATTERN PLAN - BLOCK 1L
171	OF	442	AF122	FINISH PATTERN PLAN - BLOCK 1M
172	OF	442	AF123	FINISH PATTERN PLAN - BLOCK 1N
173	OF	442	AG111	FIRST FLOOR SIGNAGE PLAN
174	OF	442	AG601	SIGN MESSAGE SCHEDULE / SIGN TYPES
175	OF	442	AG602	SIGN TYPES

SEQUENCE NO.			SHEET NO.	SHEET DESCRIPTION
07 - PLUMBING				
176	OF	442	P-001	PLUMBING ABBREVIATIONS
177	OF	442	PD111	FIRST FLOOR COMPOSITE DEMO PLAN
178	OF	442	PD112	FIRST FLOOR DEMO PLAN BLOCK 1A
179	OF	442	PD113	FIRST FLOOR DEMO PLAN BLOCK 1B
180	OF	442	PD114	FIRST FLOOR DEMO PLAN BLOCK 1C
181	OF	442	PD115	FIRST FLOOR DEMO PLAN BLOCK 1D
182	OF	442	PD116	FIRST FLOOR DEMO PLAN BLOCK 1F
183	OF	442	PD117	FIRST FLOOR DEMO PLAN BLOCK 1G
184	OF	442	PD118	FIRST FLOOR DEMO PLAN BLOCK 1H
185	OF	442	PD119	FIRST FLOOR DEMO PLAN BLOCK 1J
186	OF	442	PD120	FIRST FLOOR DEMO PLAN BLOCK 1K
187	OF	442	PD121	FIRST FLOOR DEMO PLAN BLOCK 1L
188	OF	442	PD122	FIRST FLOOR DEMO PLAN BLOCK 1M
189	OF	442	PD123	FIRST FLOOR DEMO PLAN BLOCK 1N
190	OF	442	PW011	BELOW SLAB COMPOSITE WASTE PLAN
191	OF	442	PW012	BELOW SLAB WASTE PLAN BLOCK 1A
192	OF	442	PW013	BELOW SLAB WASTE PLAN BLOCK 1B
193	OF	442	PW014	BELOW SLAB WASTE PLAN BLOCK 1C
194	OF	442	PW015	BELOW SLAB WASTE PLAN BLOCK 1D
195	OF	442	PW016	BELOW SLAB WASTE PLAN BLOCK 1F
196	OF	442	PW017	BELOW SLAB WASTE PLAN BLOCK 1G
197	OF	442	PW018	BELOW SLAB WASTE PLAN BLOCK 1H
198	OF	442	PW019	BELOW SLAB WASTE PLAN BLOCK 1J
199	OF	442	PW020	BELOW SLAB WASTE PLAN BLOCK 1K
200	OF	442	PW021	BELOW SLAB WASTE PLAN BLOCK 1L
201	OF	442	PW022	BELOW SLAB WASTE PLAN BLOCK 1M
202	OF	442	PW023	BELOW SLAB WASTE PLAN BLOCK 1N
203	OF	442	PW111	FIRST FLOOR COMPOSITE WASTE PLAN
204	OF	442	PW112	FIRST FLOOR WASTE PLAN BLOCK 1A
205	OF	442	PW113	FIRST FLOOR WASTE PLAN BLOCK 1B
206	OF	442	PW114	FIRST FLOOR WASTE PLAN BLOCK 1C
207	OF	442	PW115	FIRST FLOOR WASTE PLAN BLOCK 1D
208	OF	442	PW116	FIRST FLOOR WASTE PLAN BLOCK 1F
209	OF	442	PW117	FIRST FLOOR WASTE PLAN BLOCK 1G
210	OF	442	PW118	FIRST FLOOR WASTE PLAN BLOCK 1H
211	OF	442	PW119	FIRST FLOOR WASTE PLAN BLOCK 1J
212	OF	442	PW120	FIRST FLOOR WASTE PLAN BLOCK 1K
213	OF	442	PW121	FIRST FLOOR WASTE PLAN BLOCK 1L
214	OF	442	PW122	FIRST FLOOR WASTE PLAN BLOCK 1M
215	OF	442	PW123	FIRST FLOOR WASTE PLAN BLOCK 1N
216	OF	442	PW131	MEZZANINE WASTE PLAN
217	OF	442	PW141	LOW ROOF PLUMBING PLAN
218	OF	442	PW151	HIGH ROOF PLUMBING PLAN
219	OF	442	PP111	FIRST FLOOR COMPOSITE WATER PLAN
220	OF	442	PP112	FIRST FLOOR WATER PLAN BLOCK 1A
221	OF	442	PP113	FIRST FLOOR WATER PLAN BLOCK 1B
222	OF	442	PP114	FIRST FLOOR WATER PLAN BLOCK 1C
223	OF	442	PP115	FIRST FLOOR WATER PLAN BLOCK 1D
224	OF	442	PP116	FIRST FLOOR WATER PLAN BLOCK 1F
225	OF	442	PP117	FIRST FLOOR WATER PLAN BLOCK 1G
226	OF	442	PP118	FIRST FLOOR WATER PLAN BLOCK 1H
227	OF	442	PP119	FIRST FLOOR WATER PLAN BLOCK 1J
228	OF	442	PP120	FIRST FLOOR WATER PLAN BLOCK 1K
229	OF	442	PP121	FIRST FLOOR WATER PLAN BLOCK 1L
230	OF	442	PP122	FIRST FLOOR WATER PLAN BLOCK 1M
231	OF	442	PP123	FIRST FLOOR WATER PLAN BLOCK 1N
232	OF	442	P-501	PLUMBING DETAILS
233	OF	442	P-502	PLUMBING DETAILS
234	OF	442	P-701	WASTE RISER DIAGRAM A
235	OF	442	P-702	WASTE RISER DIAGRAM B
236	OF	442	P-703	WASTE RISER DIAGRAM C
237	OF	442	P-704	WATER RISER DIAGRAM A
238	OF	442	P-705	WATER RISER DIAGRAM A (CONTINUED)
239	OF	442	P-706	WATER RISER DIAGRAM B
240	OF	442	P-801	PLUMBING SCHEDULES
241	OF	442	P-802	PLUMBING SCHEDULES

US Army Corps of Engineers
Mobile District

Revisions

Symbol	No.	Description	Date	Approved

STATE OF ALABAMA
PAUL ZANGLIN
7135
06/29/2021
REGISTERED ARCHITECT

Designed By: JCV	Date: 06-29-2021
Drawn By: JCV	File No.
Checked By: PZ	I.S.O. Sheet File Name:
Reviewed By:	Solicitation Number:

U.S. ARMY ENGINEER DISTRICT
CORPS OF ENGINEERS
MOBILE, ALABAMA

ss&a
CLARKNEXSEN

ARTC - B640 RENOVATION
FEMA - DHS - CDP, ANNISTON, AL

INDEX OF DRAWINGS - VOLUME 1

SHEET IDENTIFICATION
G-102
SHEET 2 of 442

C:\Users\V\Shayla.Stewart\Documents\20002 - A_V\Shayla.Stewart.rvt
6/29/2021 1:30:57 PM

INDEX OF DRAWINGS - 2

SEQUENCE NO.		SHEET NO.	SHEET DESCRIPTION
01 - GENERAL			
242	OF	G-201	COVER SHEET - VOLUME 2
243	OF	G-202	INDEX OF DRAWINGS - VOLUME 1
244	OF	G-203	INDEX OF DRAWINGS - VOLUME 2
08-MECHANICAL			
245	OF 442	M-001	LEGEND AND NOTES
246	OF 442	MD111	DEMO MECHANICAL COMPOSITE PLAN
247	OF 442	MH111	DUCTWORK PLAN FIRST FLOOR - COMPOSITE
248	OF 442	MH112	DUCTWORK PLAN - BLOCK 1A
249	OF 442	MH113	DUCTWORK PLAN - BLOCK 1B
250	OF 442	MH114	DUCTWORK PLAN - BLOCK 1C
251	OF 442	MH115	DUCTWORK PLAN - BLOCK 1D
252	OF 442	MH116	DUCTWORK PLAN - BLOCK 1F
253	OF 442	MH117	DUCTWORK PLAN - BLOCK 1G
254	OF 442	MH118	DUCTWORK PLAN - BLOCK 1H
255	OF 442	MH119	DUCTWORK PLAN - BLOCK 1J
256	OF 442	MH120	DUCTWORK PLAN - BLOCK 1K
257	OF 442	MH121	DUCTWORK PLAN - BLOCK 1L
258	OF 442	MH122	DUCTWORK PLAN - BLOCK 1M
259	OF 442	MH123	DUCTWORK PLAN - BLOCK 1N
260	OF 442	MH130	MECHANICAL ROOM PLAN
261	OF 442	MH131	MECHANICAL ROOM PLAN
262	OF 442	MH132	MECHANICAL ROOM PLAN
263	OF 442	MH151	ROOF COMPOSITE PLAN
264	OF 442	MP111	HYDRONIC PLAN FIRST FLOOR- COMPOSITE
265	OF 442	MP112	HYDRONIC PLAN - BLOCK 1A
266	OF 442	MP113	HYDRONIC PLAN - BLOCK 1B
267	OF 442	MP115	HYDRONIC PLAN - BLOCK 1D
268	OF 442	MP116	HYDRONIC PLAN - BLOCK 1F
269	OF 442	MP117	HYDRONIC PLAN - BLOCK 1G
270	OF 442	MP118	HYDRONIC PLAN - BLOCK 1H
271	OF 442	MP119	HYDRONIC PLAN - BLOCK 1J
272	OF 442	MP120	HYDRONIC PLAN - BLOCK 1K
273	OF 442	MP121	HYDRONIC PLAN - BLOCK 1L
274	OF 442	MP122	HYDRONIC PLAN - BLOCK 1M
275	OF 442	MP123	HYDRONIC PLAN- BLOCK 1N
276	OF 442	M-301	SECTIONS
277	OF 442	M-701	DETAILS
278	OF 442	M-702	DETAILS
279	OF 442	M-703	DETAILS
280	OF 442	M-704	DETAILS
281	OF 442	M-705	DETAILS
282	OF 442	M-706	DETAILS
283	OF 442	M-801	SCHEDULES
284	OF 442	M-802	SCHEDULES
285	OF 442	M-803	SCHEDULES
286	OF 442	M-901	CONTROLS
287	OF 442	M-902	CONTROLS
288	OF 442	M-903	CONTROLS
289	OF 442	M-904	CONTROLS
290	OF 442	M-905	CONTROLS
291	OF 442	M-906	CONTROLS
292	OF 442	M-907	CONTROLS
293	OF 442	M-908	CONTROLS
294	OF 442	M-909	CONTROLS
295	OF 442	M-910	AIRFLOW MAP - EAST
296	OF 442	M-911	AIRFLOW MAP - WEST
09 - ELECTRICAL			
297	OF 442	E-001	ELECTRICAL LEGEND
298	OF 442	E-002	ELECTRICAL LEGEND
299	OF 442	E-003	ELECTRICAL NOTES
300	OF 442	ED101	ELECTRICAL SITE PLAN - DEMOLITION
301	OF 442	ED111	DEMOLITION COMPOSITE PLAN - ELECTRICAL
302	OF 442	ES101	ELECTRICAL SITE PLAN - POWER
303	OF 442	ES102	ELECTRICAL SITE PLAN - LIGHTING
304	OF 442	ES103	ELECTRICAL SITE PLAN - TELECOMMUNICATIONS
305	OF 442	ES501	SITE DETAILS
306	OF 442	ES502	SITE DETAILS
307	OF 442	EL111	LIGHTING FIRST FLOOR PLAN - COMPOSITE
308	OF 442	EL112	LIGHTING FLOOR PLAN - BLOCK 1A
309	OF 442	EL113	LIGHTING FLOOR PLAN - BLOCK 1B
310	OF 442	EL114	LIGHTING FLOOR PLAN - BLOCK 1C
311	OF 442	EL115	LIGHTING FLOOR PLAN - BLOCK 1D
312	OF 442	EL116	LIGHTING FLOOR PLAN - BLOCK 1F
313	OF 442	EL117	LIGHTING FLOOR PLAN - BLOCK 1G
314	OF 442	EL118	LIGHTING FLOOR PLAN - BLOCK 1H
315	OF 442	EL119	LIGHTING FLOOR PLAN - BLOCK 1J
316	OF 442	EL120	LIGHTING FLOOR PLAN - BLOCK 1K
317	OF 442	EL121	LIGHTING FLOOR PLAN - BLOCK 1L
318	OF 442	EL122	LIGHTING FLOOR PLAN - BLOCK 1M
319	OF 442	EL123	LIGHTING FLOOR PLAN - BLOCK 1N
320	OF 442	EL131	LIGHTING FLOOR PLAN - MEZZANINE
321	OF 442	EL401	ENLARGED LIGHTING PLANS
322	OF 442	EL501	LUMINAIRE DETAILS
323	OF 442	EL502	LUMINAIRE DETAILS
324	OF 442	EL503	LUMINAIRE DETAILS
325	OF 442	EL601	LUMINAIRE SCHEDULE
326	OF 442	EL602	LIGHTING CONTROL SINGLE LINE DIAGRAM
327	OF 442	EL603	LIGHTING CONTROL PANEL SCHEDULE
328	OF 442	EL604	LIGHTING CONTROL WIRING DIAGRAM
329	OF 442	EL605	LIGHTING CONTROL WIRING DIAGRAM
330	OF 442	EL606	LIGHTING CONTROL WIRING DIAGRAM
331	OF 442	EL607	LIGHTING CONTROL WIRING DIAGRAM
332	OF 442	EL608	LIGHTING CONTROL WIRING DIAGRAM
333	OF 442	EL609	LIGHTING CONTROL WIRING DIAGRAM
334	OF 442	EL610	LIGHTING CONTROL WIRING DIAGRAM
335	OF 442	EP111	POWER FIRST FLOOR PLAN - COMPOSITE
336	OF 442	EP112	POWER FLOOR PLAN - BLOCK 1A
337	OF 442	EP113	POWER FLOOR PLAN - BLOCK 1B
338	OF 442	EP114	POWER FLOOR PLAN - BLOCK 1C
339	OF 442	EP115	POWER FLOOR PLAN - BLOCK 1D
340	OF 442	EP116	POWER FLOOR PLAN - BLOCK 1F
341	OF 442	EP117	POWER FLOOR PLAN - BLOCK 1G
342	OF 442	EP118	POWER FLOOR PLAN - BLOCK 1H
343	OF 442	EP119	POWER FLOOR PLAN - BLOCK 1J
344	OF 442	EP120	POWER FLOOR PLAN - BLOCK 1K
345	OF 442	EP121	POWER FLOOR PLAN - BLOCK 1L
346	OF 442	EP122	POWER FLOOR PLAN - BLOCK 1M
347	OF 442	EP123	POWER FLOOR PLAN - BLOCK 1N
348	OF 442	EP131	POWER FLOOR PLAN -MEZZANINE
349	OF 442	EP151	POWER ROOF PLAN - COMPOSITE
350	OF 442	EP401	ENLARGED POWER PLANS
351	OF 442	EP501	ELECTRICAL DETAILS
352	OF 442	EP601	POWER SINGLE LINE DIAGRAM
353	OF 442	EP602	POWER SINGLE LINE DIAGRAM
354	OF 442	EP603	POWER SINGLE LINE DIAGRAM
355	OF 442	EP604	FEEDER SCHEDULE
356	OF 442	EP605	PANELBOARD SCHEDULES
357	OF 442	EP606	PANELBOARD SCHEDULES
358	OF 442	EP607	PANELBOARD SCHEDULES
359	OF 442	EP608	PANELBOARD SCHEDULES
360	OF 442	EP609	PANELBOARD SCHEDULES
361	OF 442	EP610	PANELBOARD SCHEDULES
362	OF 442	EP611	PANELBOARD SCHEDULES
363	OF 442	EP801	LIGHTNING PROTECTION PLAN
364	OF 442	EP802	LIGHTNING PROTECTION DETAILS
365	OF 442	EG601	GROUNDING RISER AND DETAIL
366	OF 442	EG602	GROUNDING SYSTEM WIRING DIAGRAM
10 - TELECOMMUNICATIONS			
367	OF 442	ET001	TELECOMMUNICATIONS LEGEND
368	OF 442	ET002	TELECOMMUNICATIONS NOTES
369	OF 442	ET111	TELECOMMUNICATIONS FIRST FLOOR PLAN - COMPOSITE
370	OF 442	ET112	TELECOMMUNICATIONS FLOOR PLAN - BLOCK 1A
371	OF 442	ET113	TELECOMMUNICATIONS FLOOR PLAN - BLOCK 1B
372	OF 442	ET114	TELECOMMUNICATIONS FLOOR PLAN - BLOCK 1C
373	OF 442	ET115	TELECOMMUNICATIONS FLOOR PLAN - BLOCK 1D
374	OF 442	ET116	TELECOMMUNICATIONS FLOOR PLAN - BLOCK 1F
375	OF 442	ET117	TELECOMMUNICATIONS FLOOR PLAN - BLOCK 1G
376	OF 442	ET118	TELECOMMUNICATIONS FLOOR PLAN - BLOCK 1H
377	OF 442	ET119	TELECOMMUNICATIONS FLOOR PLAN - BLOCK 1J
378	OF 442	ET120	TELECOMMUNICATIONS FLOOR PLAN - BLOCK 1K
379	OF 442	ET121	TELECOMMUNICATIONS FLOOR PLAN - BLOCK 1L
380	OF 442	ET122	TELECOMMUNICATIONS FLOOR PLAN - BLOCK 1M
381	OF 442	ET123	TELECOMMUNICATIONS FLOOR PLAN - BLOCK 1N
382	OF 442	ET131	TELECOMMUNICATIONS FLOOR PLAN - MEZZANINE
383	OF 442	ET501	TELECOMMUNICATIONS SINGLE LINE DIAGRAMS
384	OF 442	ET502	TELECOMMUNICATIONS SINGLE LINE DIAGRAMS
385	OF 442	ET503	TELECOMMUNICATIONS SINGLE LINE DIAGRAMS
386	OF 442	ET504	TELECOMMUNICATIONS SINGLE LINE DIAGRAMS
387	OF 442	ET505	TELECOMMUNICATIONS SINGLE LINE DIAGRAMS
388	OF 442	ET506	TELECOMMUNICATIONS SINGLE LINE DIAGRAMS
389	OF 442	ET601	TELECOMMUNICATIONS DETAILS
390	OF 442	ET602	TELECOMMUNICATIONS DETAILS
391	OF 442	ET603	TELECOMMUNICATIONS DETAILS
392	OF 442	ET604	TELECOMMUNICATIONS DETAILS
393	OF 442	ET605	TELECOMMUNICATIONS DETAILS
394	OF 442	ET606	TELECOMMUNICATIONS DETAILS
11 - FIRE PROTECTION			
395	OF 442	FA001	FIRE ALARM/MNS NOTES & SYMBOLS
396	OF 442	FA111	FIRE ALARM/MNS - COMPOSITE PLAN
397	OF 442	FA112	FIRE ALARM/MNS - BLOCK 1A
398	OF 442	FA113	FIRE ALARM/MNS - BLOCK 1B
399	OF 442	FA114	FIRE ALARM/MNS - BLOCK 1C
400	OF 442	FA115	FIRE ALARM/MNS - BLOCK 1D
401	OF 442	FA116	FIRE ALARM/MNS - BLOCK 1F
402	OF 442	FA117	FIRE ALARM/MNS - BLOCK 1G
403	OF 442	FA118	FIRE ALARM/MNS - BLOCK 1H
404	OF 442	FA119	FIRE ALARM/MNS - BLOCK 1J
405	OF 442	FA120	FIRE ALARM/MNS - BLOCK 1K
406	OF 442	FA121	FIRE ALARM/MNS - BLOCK 1L
407	OF 442	FA122	FIRE ALARM/MNS - BLOCK 1M
408	OF 442	FA123	FIRE ALARM/MNS - BLOCK 1N
409	OF 442	FA131	FIRE ALARM/MNS - MEZZANINE
410	OF 442	FA400	FIRE ALARM/MNS MATRIX
411	OF 442	FA501	FIRE ALARM/MNS DETAILS
412	OF 442	FP001	FIRE SPRINKLER NOTES
413	OF 442	FP111	FIRE SPRINKLER - COMPOSITE PLAN
414	OF 442	FP112	FIRE SPRINKLER - BLOCK 1A
415	OF 442	FP113	FIRE SPRINKLER - BLOCK 1B
416	OF 442	FP114	FIRE SPRINKLER - BLOCK 1C
417	OF 442	FP115	FIRE SPRINKLER - BLOCK 1D
418	OF 442	FP116	FIRE SPRINKLER - BLOCK 1F
419	OF 442	FP117	FIRE SPRINKLER - BLOCK 1G
420	OF 442	FP118	FIRE SPRINKLER - BLOCK 1H
421	OF 442	FP119	FIRE SPRINKLER - BLOCK 1J
422	OF 442	FP120	FIRE SPRINKLER - BLOCK 1K
423	OF 442	FP121	FIRE SPRINKLER - BLOCK 1L
424	OF 442	FP122	FIRE SPRINKLER - BLOCK 1M
425	OF 442	FP123	FIRE SPRINKLER - BLOCK 1N
426	OF 442	FP131	FIRE SPRINKLER - MEZZANINE
427	OF 442	FP400	FIRE SPRINKLER DETAILS AND RISER
428	OF 442	FP401	FIRE SPRINKLER DETAILS
12 - EQUIPMENT			
429	OF 442	EQ111	EQUIPMENT PLAN - COMPOSITE
430	OF 442	EQ112	EQUIPMENT PLAN - 1A
431	OF 442	EQ113	EQUIPMENT PLAN - 1B
432	OF 442	EQ114	EQUIPMENT PLAN - 1C
433	OF 442	EQ115	EQUIPMENT PLAN - 1D
434	OF 442	EQ116	EQUIPMENT PLAN - 1F
435	OF 442	EQ117	EQUIPMENT PLAN - 1G
436	OF 442	EQ118	EQUIPMENT PLAN - 1H
437	OF 442	EQ119	EQUIPMENT PLAN - 1J
438	OF 442	EQ120	EQUIPMENT PLAN - 1K
439	OF 442	EQ121	EQUIPMENT PLAN - 1L
440	OF 442	EQ122	EQUIPMENT PLAN - 1M
441	OF 442	EQ123	EQUIPMENT PLAN - 1N
442	OF 442	EQ601	EQUIPMENT SCHEDULE

US Army Corps of Engineers
Mobile District

Revisions

Symbol	No.	Description	Date	Approved

STATE OF ALABAMA
PAUL L. ZANGLIN
7135
06/29/2021
REGISTERED ARCHITECT

Designed By: JCV
Drawn By: JCV
Checked By: PZ
Reviewed By:
Date: 06-29-2021
File No.
I.S.O. Sheet File Name:
Solicitation Number:

U.S. ARMY ENGINEER DISTRICT
CORPS OF ENGINEERS
MOBILE, ALABAMA

ss&a
CLARKNEXSEN

ARTC - B640 RENOVATION
FEMA - DHS - CDP, ANNISTON, AL

INDEX OF DRAWINGS - VOLUME 2

SHEET IDENTIFICATION
G-103
SHEET 3 of 442

C:\Users\V\Shayla.Stewart\Documents\20002 - A_V\Shayla.Stewart.rvt
6/29/2021 1:31:05 PM

CODE REQUIREMENTS

APPLICABLE CODES AND STANDARDS

NFPA 1 FIRE CODE, 2018 EDITION
NFPA 10 STANDARD FOR PORTABLE FIRE EXTINGUISHERS, 2018 EDITION
NFPA 13 STANDARD FOR THE INSTALLATION OF SPRINKLER SYSTEMS, 2019 EDITION
NFPA 24 INSTALLATION FOR THE INSTALLATION OF PRIVATE FIRE SERVICE MAINS AND THEIR APPURTENANCES, 2019 EDITION
NFPA 70 NATIONAL ELECTRICAL CODE, 2020 EDITION
NFPA 72 NATIONAL FIRE ALARM AND SIGNALING CODE, 2019 EDITION
NFPA 90A STANDARD FOR THE INSTALLATION OF AIR-CONDITIONING AND VENTILATING SYSTEMS, 2021 EDITION
NFPA 101 LIFE SAFETY CODE (LSC), 2021 EDITION
NFPA 291 RECOMMENDED PRACTICE FOR FIRE FLOW TESTING AND MARKING OF HYDRANTS, 2019 EDITION
NFPA 495 EXPLOSIVE MATERIALS CODE, 2018 EDITION
IBC INTERNATIONAL BUILDING CODE, 2018 EDITION
UFC 1-200-01 DOD BUILDING CODE, 8 OCTOBER 2019, CHANGE 1, 1 OCT 2020
UFC 3-600-01 FIRE PROTECTION ENGINEERING FOR FACILITIES, 8 AUGUST 2016, CHANGE 5, 24 SEPT 2020
UFC 4-021-01 DESIGN AND O&M: MASS NOTIFICATION SYSTEMS, 9 APRIL 2008, CHANGE 1, JANUARY 2010

BUILDING CODE AND LIFE SAFETY CODE SUMMARY

CLASSIFICATION OF OCCUPANCY - GROUP A-3 ASSEMBLY - ARTC HALL, STUDENT COMMON AREA, WELCOME CENTER RECEPTION, AND CLASSROOMS WITH OCCUPANT LOAD OF 50 PERSONS OR MORE.
- GROUP B BUSINESS - REMAINDER OF BUILDING

NONSEPARATED MIXED USE PER IBC SECTION 508.3 / MIXED OCCUPANCIES PER NFPA 101 SECTION 6.1.14.3.

CONSTRUCTION TYPE: TYPE II B (NON COMBUSTIBLE, UNPROTECTED CONSTRUCTION)

HEIGHT AND AREA (EXISTING):
ALLOWABLE HEIGHT: 3 STORIES, 75 FEET
ACTUAL BUILDING HEIGHT: 1 STORY, < 23 FEET

ALLOWABLE AREA: UNLIMITED PER IBC SECTION 507.4 AND 507.6
ACTUAL PER FLOOR < 43,000 SQUARE FEET

THE EXISTING MECHANICAL MEZZANINE IS NOT CONSIDERED A STORY, SINCE IT IS LESS THAN HALF THE AREA OF THE ROOM THAT CONTAINS THE MEZZANINE (REF. 505.2.1(2)/IBC SECTION). THE MEZZANINE IS CONSIDERED TO BE WITHIN THE STUDENT COMMONS AREA; THE MEZZANINE IS PERMITTED TO BE ENCLOSED AND NOT OPEN TO THE COMMONS AREA SINCE THE OCCUPANT LOAD OF THE MEZZANINE IS LESS THAN 10 PERSONS (REF. 505.2.3(1)/IBC).

PROTECTION OF CONSTRUCTION ELEMENTS:

	FIRE RESISTANCE RATING REQUIREMENTS
PRIMARY STRUCTURAL FRAME	0 HOUR
BEARING WALLS AND PARTITIONS	
INTERIOR	0 HOUR
EXTERIOR 10 FEET OR GREATER SEPARATION	0 HOUR
NONBEARING WALLS AND PARTITIONS	
INTERIOR	0 HOUR
EXTERIOR 10 FEET OR GREATER SEPARATION	0 HOUR
FLOOR CONSTRUCTION	0 HOUR
ROOF CONSTRUCTION	0 HOUR

SUBDIVISION OF BUILDING

STORAGE ROOMS USED FOR GENERAL STORAGE AND BOILER OR FURNACE ROOMS WILL BE ENCLOSED WITH SMOKE PARTITIONS DESIGNED TO LIMIT THE TRANSFER OF SMOKE (REF. PARAGRAPHS 12.3.2, 38.3.2, 8.4 AND 8.7/LSC).

OCCUPANT LOAD (REF. TABLE 7.3.1.2/NFPA 101 AND TABLE 10-1/UFC 3-600-01)

OCCUPANT LOAD FACTORS BASED ON USE
ASSEMBLY USE
(TABLES AND CHAIRS; NOT FIXED): 1 PERSON PER 15 NSF
(CHAIRS; NOT FIXED): 1 PERSON PER 7 NSF
(CHAIRS; FIXED): NUMBER OF CHAIRS
BUSINESS USE: 1 PERSON PER 150 GSF
CLASSROOM USE: 1 PERSON PER 20 NSF
LABS, SHOPS, VOCATION ROOM USE: 1 PERSON PER 50 NSF
STORAGE USE: 1 PERSON PER 500 GSF

CALCULATED OCCUPANT LOAD:

ROOM/SPACE		USE	AREA (SF)	OCCUPANT LOAD FACTOR (SF/PERSON)	OCCUPANT LOAD (PERSONS)
RECEPTION AREA	200	ASSEMBLY - CONCENTRATED	862.1	7 NET	124
CONFERENCE	124	ASSEMBLY - LESS CONCENTRATED	349.4	15 NET	24
CONFERENCE	136		558.0		38
STUDENT COMMON AREA			3,262.0		227
LOUNGE	137		240.2		17
SEATING ALCOVE	316		139.9		10
BREAKOUT ROOM	310	CLASSROOM	513.3	20 NET	26
BREAKOUT ROOM	311		514.3		26
BREAKOUT ROOM	312		510.3		26
BREAKOUT ROOM	313		400.4		22
LARGE CLASSROOM	300		963.4		63
LARGE CLASSROOM	301		1010.5		63
LARGE CLASSROOM	302		877.0		63
LARGE CLASSROOM	303		829.2		63
CLASSROOM STORAGE	306	STORAGE	83.5	500 GROSS	1
CONTROL ROOM	104A		97.2		
STORAGE	302A		19.0		
STORAGE	303A		17.5		
STORAGE	305		17.8		
STORAGE	106B		88.1		
STU ARMS ROOM	107		102.9		
MULTI-PURPOSE WET ENVIORNMENT	315	LABORATORIES, SHOPS, VOCATION ROOMS	996.7	50 NET	24
LECTURE HALL	201	FIXED SEATING	2,966.9	NUMBER OF SEATS	206
LECTURE HALL LECTURER AREA		INCLUDED IN BUSINESS AREA		500 GROSS	
REMAINING BUSINESS USE		BUSINESS	2,7276.3	150 GROSS	182
TOTAL					**1,196**

CODE REQUIREMENTS (CONT.)

EGRESS

EGRESS CAPACITY - DOORS, RAMPS, AND LEVEL COMPONENTS: 0.2 IN PER PERSON
- EXISTING STAIR COMPONENTS: 0.3 IN PER PERSON (WIDTH WITHIN 44-INCHES OF HANDRAIL)

ARRANGEMENT OF MEANS OF EGRESS FOR EGRESS:

MAXIMUM PERMITTED COMMON PATH OF TRAVEL
- ASSEMBLY OCCUPANCY: 20 FT
- BUSINESS OCCUPANCY: 100 FT

MAXIMUM PERMITTED TRAVEL DISTANCE TO AN EXIT FROM ANY POINT IN A ROOM
- ASSEMBLY OCCUPANCY: 250 FT
- BUSINESS OCCUPANCY: 300 FT

MAXIMUM PERMITTED DEAD END CORRIDORS
- ASSEMBLY OCCUPANCY: 20 FT
- BUSINESS OCCUPANCY: 50 FT (IF SERVING BUSINESS OCCUPANTS ONLY)

EMERGENCY LIGHTING WILL BE INTEGRATED INTO THE BUILDING'S LIGHTING FIXTURES VIA BATTERY POWER TO ILLUMINATE MEANS OF EGRESS IN ACCORDANCE WITH NFPA 101. EMERGENCY LIGHT LOCATIONS ARE SHOWN ON ELECTRICAL DRAWINGS.

SIDE-HINGED DOORS IN ROOMS OR AREAS WITH AN OCCUPANT LOAD OF 50 OR MORE SHALL SWING IN THE DIRECTION OF EGRESS TRAVEL.

INTERIOR FINISH

INTERIOR WALL AND CEILING:

LOBBIES AND EXIT ACCESS CORRIDORS: CLASS A OR B

ALL OTHER AREAS: CLASS A, B, OR C

INTERIOR FLOOR FINISH: SHALL BE NOT LESS THAN CLASS II IN EXIT ENCLOSURES AND EXIT ACCESS CORRIDORS

INSULATING MATERIALS INSTALLED IN ANY CONSTRUCTION TYPE, CONCEALED OR EXPOSED, SHALL HAVE A FLAMESPREAD RATING NO GREATER THAN 25 AND A SMOKE DEVELOPED RATING NO GREATER THAN 450 AS DETERMINED IN ACCORDANCE WITH ASTM E 84.

FIRE SPRINKLER SYSTEM

THE EXISTING FACILITY WILL BE FULLY SPRINKLERED WITH A WET-PIPE SPRINKLER SYSTEM. QUICK RESPONSE TYPE SPRINKLERS WILL BE UTILIZED IN ALL AREAS EXCEPT IN MECHANICAL SPACES OR IN SPACES IN THE IMMEDIATE VICINITY OF UNIT-TYPE HEATERS, OR WHERE QUICK RESPONSE TYPE SPRINKLERS ARE NOT LISTED FOR USE. THE SPRINKLER SYSTEMS WILL BE INSTALLED IN ACCORDANCE WITH THE REQUIREMENTS OF SECTION 9.7/NFPA 101 AND NFPA 13. THE WATER SUPPLY WILL BE DESIGNED TO MEET THE MINIMUM REQUIREMENTS FOR AN AUTOMATIC SPRINKLER SYSTEM IN ACCORDANCE WITH NFPA 13, CHAPTER 9/UFC 3 600-01.

STANDPIPE PROTECTION IS NOT REQUIRED FOR THE SINGLE STORY BUILDING.

SPRINKLER HAZARD CLASSIFICATIONS WILL BE AS FOLLOWS:

LIGHT HAZARD: OFFICES, AUDITORIUMS, VOCATION SHOPS, CLASSROOMS, RESTROOMS, LOBBY, ADMINISTRATIVE SPACES.

ORDINARY HAZARD: ELECTRICAL ROOMS, MECHANICAL ROOMS, STORAGE ROOMS.

AUTOMATIC SPRINKLER PROTECTION SYSTEMS WILL MEET THE FOLLOWING:

NON-STORAGE OCCUPANCIES: IN ACCORDANCE WITH NFPA 13, EXCEPT DISCHARGE REQUIREMENTS IN ACCORDANCE WITH UFC 3-600-01, TABLE 9-3.

LIGHT HAZARD: 0.10 GPM/SF OVER 1,500 SF WITH 250 GPM TOTAL INSIDE AND OUTSIDE HOSE STREAM ALLOWANCE FOR A MINIMUM DURATION OF 60 MINUTES; MINIMUM SPRINKLER K-FACTOR OF 5.6.

ORDINARY HAZARD: 0.20 GPM/SF OVER 2,500 SF WITH 250 GPM TOTAL INSIDE AND OUTSIDE HOSE STREAM ALLOWANCE FOR A MINIMUM DURATION OF 60 MINUTES; MINIMUM SPRINKLER K-FACTOR OF 8.0.

OTHER STORAGE OVER 12 FT IN HEIGHT IN ACCORDANCE WITH NFPA 13, CHAPTERS 14 OR 16 (NOT ANTICIPATED FOR THE FACILITY).

REFER TO THE FIRE SPRINKLER DRAWINGS FOR ADDITIONAL INFORMATION.

FIRE DEPARTMENT ACCESS

FIRE DEPARTMENT ACCESS WILL BE IN ACCORDANCE WITH PER UFC 3-600-01, SECTION 9-1.

FIRE HYDRANTS

FIRE HYDRANTS WILL BE PROVIDED IN ACCORDANCE WITH UFC 3-600-01, SECTION 9-3.5.8.2, WITHIN 350 FEET OF ALL POINTS OF THE BUILDING EXTERIOR. ONE HYDRANT WILL BE LOCATED WITHIN 150 FEET OF FIRE DEPARTMENT CONNECTION.

FIRE ALARM AND MASS NOTIFICATION SYSTEM

A NEW COMPLETE ELECTRONICALLY SUPERVISED, ADDRESSABLE, INTELLIGENT, MANUAL AND AUTOMATIC, ANNUNCIATED FIRE ALARM AND DETECTION SYSTEM (AND MASS NOTIFICATION SYSTEM) WILL BE INSTALLED THROUGHOUT THE FACILITY(NFPA 72 AND UFC 4-021-01). THE SYSTEM SHALL INCLUDE CONTROL PANEL(S), REMOTE ANNUNCIATOR(S), LOCAL OPERATING CONSOLES, POWER SUPPLIES, SPRINKLER SYSTEM MONITORING, AHU MONITORING AND SHUT DOWN, INITIATING DEVICES AND SPEAKER/STROBE NOTIFICATION APPLIANCES. THE SYSTEM SHALL COMPLY WITH UFC 3-600-01, UFC 4-021-01 AND NFPA 72. THE FIRE ALARM AND MASS NOTIFICATION SYSTEMS WILL BE COMBINED INTO ONE SYSTEM. REFER TO THE FIRE ALARM DRAWINGS FOR ADDITIONAL INFORMATION.

SYMBOL LIST

—S— NON-RATED SMOKE PARTITION
EXIT TRAVEL DISTANCE
COMMON PATH OF TRAVEL
DEAD-END CORRIDOR TRAVEL DISTANCE
EXIT SIGN LOCATED ABOVE EXIT DOOR
EXIT SIGN WITH DIRECTIONAL ARROWS DIRECTING OCCUPANT TOWARDS EXIT
FIRE EXTINGUISHER
KEY NOTE INDICATOR

OCCUPANT LOAD IDENTIFIER
OCCUPANT LOAD (NO. OF PERSONS)
FUNCTION OF SPACE
AREA (SQUARE FEET)

EXTERIOR EXIT IDENTIFIER
EXIT
CLEAR WIDTH OF DISCHARGE COMPONENT: IN
EXIT CAPACITY PROVIDED - NO. OF PEOPLE:
EXIT CAPACITY REQUIRED - NO. OF PEOPLE:
EXIT NUMBER
WIDTH OF EXTERIOR EXIT DOOR
NO. OF PEOPLE THAT CAN USE DOOR
NO. OF PEOPLE THAT MUST USE DOOR

ABBREVIATIONS

ABBREVIATION	DESCRIPTION
A-7	ASSEMBLY USE (7 SQ. FT. / PERSON)
A-15	ASSEMBLY USE (15 SQ. FT. / PERSON)
BUS	BUSINESS
C-20	CLASSROOM USE (20 SQ. FT. /PERSON)
CP	COMMON PATH
FIXED	ASSEMBLY USE - FIXED SEATING
FT	FOOT
GSF	GROSS SQUARE FEET
IN	INCHES
MECH	MECHANICAL
MIN	MINUTE
NO	NUMBER
NSF	NET SQUARE FEET
SF	SQUARE FEET
STOR	STORAGE
TD	TRAVEL DISTANCE
V-50	VOCATION SHOPS USE (50 SQ. FT. / PERSON)

US Army Corps of Engineers
Mobile District

Revisions
Symbol | No. | Description | Date | Approved

GEORGIA REGISTERED No. PE039514 PROFESSIONAL ENGINEER STEPHEN M. TAMBURELLO
29 JUN 2021

Date: 06-29-2021
File No.
I.S.O. Sheet File Name:
Solicitation Number:
Designed By: SMT
Drawn By: SMT
Checked By: PDR
Reviewed By:

U.S. ARMY ENGINEER DISTRICT
CORPS OF ENGINEERS
MOBILE, ALABAMA

ss&a
CLARKNEXSEN

ARTC - B640 RENOVATION
FEMA - DHS - CDP, ANNISTON, AL

LIFE SAFETY NOTES

SHEET IDENTIFICATION
G-110
SHEET 4 of 442

C:\Users\stamburello\Documents\20002 - F_stamburelloVFGXW.rvt
6/28/2021 12:31:52 PM

EXIT 7		
CLEAR WIDTH OF DISCHARGE COMPONENT:	31	IN
EXIT CAPACITY PROVIDED - NO. OF PEOPLE:	155	
EXIT CAPACITY REQUIRED - NO. OF PEOPLE:	90	

EXIT 6		
EGRESS WIDTH OF STAIR COMPONENT:	96	IN
EXIT CAPACITY PROVIDED - NO. OF PEOPLE:	320	
EXIT CAPACITY REQUIRED - NO. OF PEOPLE:	100	

*STAIR WIDTHS LIMITED DUE TO PROXIMITY OF HANDRAIL.
*STAIR COMPONENT IS MORE RESTRICTIVE THAN EXIT DOORS.

EXIT 5		
EGRESS WIDTH OF STAIR COMPONENT:	96	IN
EXIT CAPACITY PROVIDED - NO. OF PEOPLE:	320	
EXIT CAPACITY REQUIRED - NO. OF PEOPLE:	100	

EXIT 4		
CLEAR WIDTH OF DISCHARGE COMPONENT:	33	IN
EXIT CAPACITY PROVIDED - NO. OF PEOPLE:	165	
EXIT CAPACITY REQUIRED - NO. OF PEOPLE:	91	

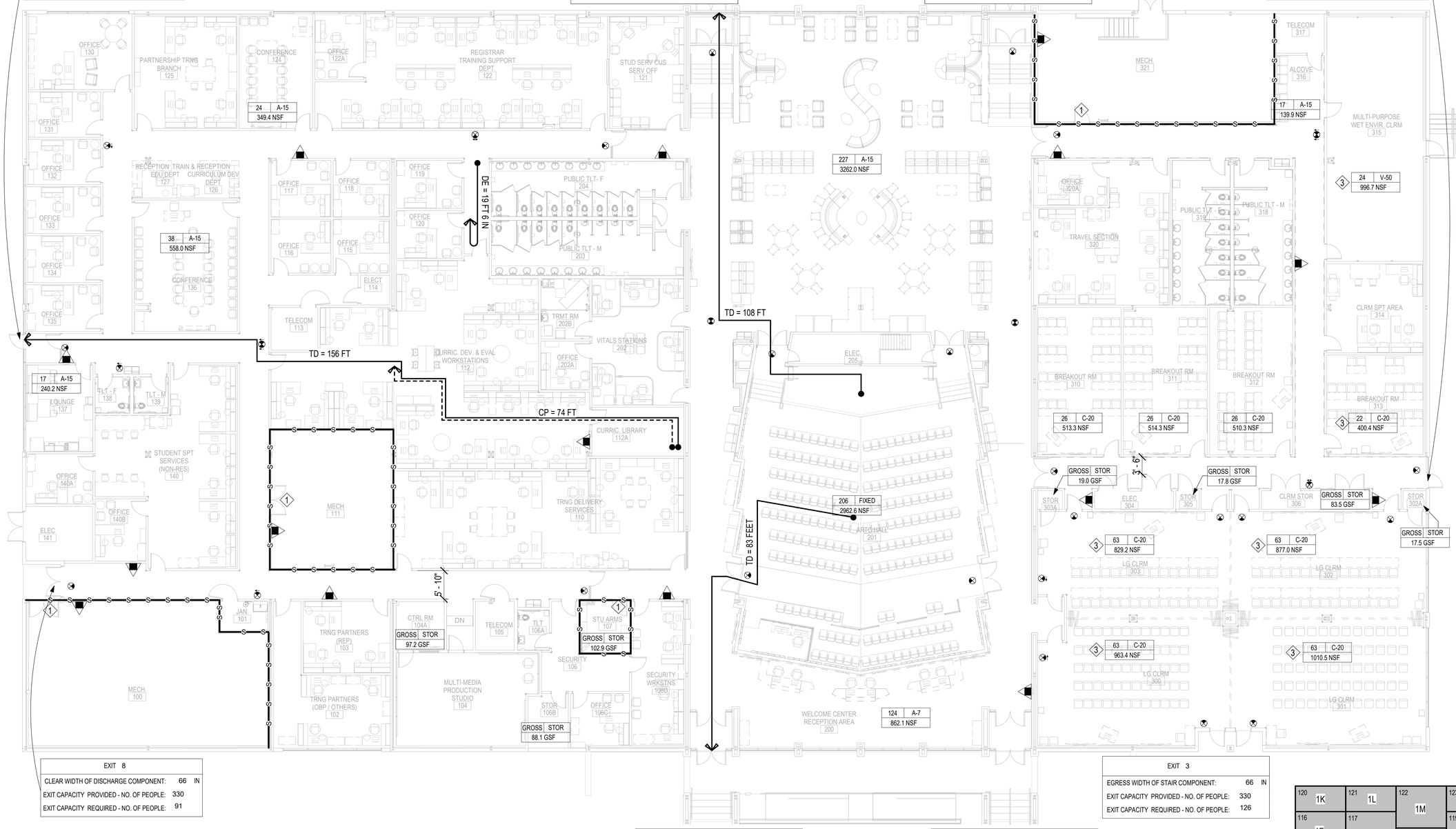

EXIT 8		
CLEAR WIDTH OF DISCHARGE COMPONENT:	66	IN
EXIT CAPACITY PROVIDED - NO. OF PEOPLE:	330	
EXIT CAPACITY REQUIRED - NO. OF PEOPLE:	91	

EXIT 3		
EGRESS WIDTH OF STAIR COMPONENT:	66	IN
EXIT CAPACITY PROVIDED - NO. OF PEOPLE:	330	
EXIT CAPACITY REQUIRED - NO. OF PEOPLE:	126	

EXIT 1		
EGRESS WIDTH OF STAIR COMPONENT:	96	IN
EXIT CAPACITY PROVIDED - NO. OF PEOPLE:	320	
EXIT CAPACITY REQUIRED - NO. OF PEOPLE:	299	

*STAIR WIDTH LIMITED DUE TO PROXIMITY OF HANDRAIL.
*STAIR COMPONENT MORE RESTRICTIVE THAN EXIT DOORS.

EXIT 2		
EGRESS WIDTH OF STAIR COMPONENT:	96	IN
EXIT CAPACITY PROVIDED - NO. OF PEOPLE:	320	
EXIT CAPACITY REQUIRED - NO. OF PEOPLE:	299	

*STAIR WIDTH LIMITED DUE TO PROXIMITY OF HANDRAIL.
*STAIR COMPONENT MORE RESTRICTIVE THAN EXIT DOORS.

TOTAL STORAGE USE	2	STOR	2
	557.6 GSF		
REMAINING BUSINESS USE	179	BUS	
	26,830 GSF		

KEYNOTES

1. ALL DOORS IN NON-RATED SMOKE PARTITIONS SHALL BE SELF-CLOSING OR AUTOMATIC-CLOSING AND SHALL NOT INCLUDE LOUVERS.
2. TOTAL OCCUPANT LOAD FOR ALL STORAGE ROOMS INDICATED IN "TOTAL STORAGE USE" TAG. ROOMS WITH OCCUPANT LOAD TAGS LABELED "GROSS" ARE ACCOUNTED FOR IN THE TOTAL STORAGE USE TAG.
3. THE HIGHER OF THE SCOPE OF WORK INTENDED USE AND CALCULATED OCCUPANT LOAD FOR SPACE USED IN OCCUPANT LOAD CALCULATION.

PLAN NORTH

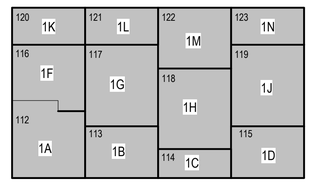

FIRST FLOOR KEY PLAN

LIFE SAFETY PLAN

SCALE: 3/32"=1'-0"

US Army Corps of Engineers
Mobile District

Symbol	No.	Description	Date	Approved
		Revisions		

STATE OF GEORGIA
JOHN M. TAMBURELLO
No. PE0009814
PROFESSIONAL
ENGINEER
29 Jun 2021

Date: 06-29-2021
File No.
I.S.O. Sheet File Name:
Solicitation Number:
Designed By: SMT
Drawn By: SMT
Checked By: PDR
Reviewed By:

U.S. ARMY ENGINEER DISTRICT
CORPS OF ENGINEERS
MOBILE, ALABAMA

ss&a
CLARKNEXSEN

ARTC - B640 RENOVATION
FEMA - DHS - CDP, ANNISTON, AL

LIFE SAFETY PLAN

SHEET IDENTIFICATION
G-111
SHEET 5 of 442

C:\Users\stamburello\Documents\20002 - F_stamburelloVFGXW.rvt
6/28/2021 12:32:06 PM

ASBESTOS ABATEMENT GENERAL NOTES

ACM = ASBESTOS CONTAINING MATERIAL
NAM = NON–ASBESTOS CONTAINING MATERIAL
NPE = NEGATIVE PRESSURE ENCLOSURE

1. ALL WORK ASSOCIATED WITH THE REMOVAL, HANDLING, TRANSPORT, AND DISPOSAL OF ACM SHALL BE CONDUCTED BY A SAFE STATE ALABAMA LICENSED CONTRACTOR IN ACCORDANCE WITH ALL APPLICABLE STATE LAWS. ALL ACM ABATEMENT PERSONNEL EMPLOYED ON THIS PROJECT SHALL HAVE CURRENT (WITHIN LAST 12 MONTHS) TRAINING, AS SUPERVISORS OR WORKERS, THAT COMPLIES WITH 40 CFR PART 763.

2. ALL WORK ADDRESSED BY THESE DRAWINGS AND NOTES SHALL BE CONDUCTED IN ACCORDANCE WITH SPECIFICATION SECTION 028213.0010. REFER TO SPECIFICATION SECTION 028213.0010 FOR ALL SUBMITTAL, DOCUMENTATION, NOTIFICATION, TRAINING, AND MONITORING REQUIREMENTS.

3. A PRE–RENOVATION ASBESTOS INSPECTION WAS CONDUCTED FOR THIS PROJECT & ACM WAS IDENTIFIED IN THE FORM OF SEVERAL TYPES OF MATERIALS. THOSE ACM THAT WILL BE IMPACTED BY THE WORK OF THIS PROJECT ARE INDICATED ON THE "H" SERIES DRAWING SHEETS. IT IS THE INTENT OF THIS PROJECT TO HAVE THE ACM ABATEMENT CONTRACTOR REMOVE, FROM THE WORK AREAS, ONLY THE ACM THAT WOULD OTHERWISE BE REMOVED OR DISTURBED BY OTHER TRADES IN ORDER TO ACCOMPLISH THE PROJECT SCOPE OF WORK. THE ACM ABATEMENT CONTRACTOR SHALL PERFORM THE ACM REMOVAL, IN ANY GIVEN AREA, PRIOR TO WORK BY OTHER TRADES IN THAT AREA.

4. THE WORD "ABATEMENT", AS USED ON THESE DRAWINGS, SHALL GENERALLY MEAN ACM REMOVAL AND DISPOSAL. OTHER RELATED ACTIVTIES SUCH AS LABELING AND/OR SEALING EDGES OF ACM TO REMAIN IN PLACE ARE NOTED ACCORDINGLY, IF APPLICABLE.

5. FOR THE PURPOSES OF THIS CONTRACT ALL ACM INDICATED FOR ABATEMENT SHALL BE TREATED AS NESHAP REGULATED ACM (RACM) PURSUANT TO 40 CFR 61 SUBPART M. ALL REMOVED ACM SHALL BE SIX MIL POLY DOUBLE BAGGED OR DOUBLE WRAPPED AND SEALED BY 6 MIL POLY SHEETING AND LABELED AS RACM.

6. NON–ACM COMPONENTS THAT HAVE ACM ADHERED TO THEM (E.G. NON–ACM LEVELING COMPOUND WITH ADHERED ACM FLOOR TILE AND/OR ACM MASTIC; NAM MASTIC OR FIBERGLASS INSULATION WITH ADHERED ACM MASTIC) SHALL EITHER BE COMPLETELY SEPARATED FROM THE ACM, OR THE ACM/NAM ADHERED COMBINATION SHALL BE DISPOSED OF AS FULLY REGULATED ACM (RACM).

7. FLOORING MASTIC WITH LEVELING COMPOUND REMOVAL SHALL BE PERFORMED INSIDE A NPE USING LOW ODOR CHEMICAL STRIPPERS. MASTIC REMOVAL SHALL BE DEEMED COMPLETE WHEN NO MASTIC OR STRIPPER RESIDUE CAN BE PEELED OFF THE CONCRETE SURFACE USING A RAZOR SCRAPER. REMOVAL OF DEEP STAINS AND/OR SMALL POCKETS OF MASTIC EMBEDDED IN CRACKS AND IRREGULAR DEPRESSIONS IS NOT NECESSARY. PARTICULAR ATTENTION SHALL BE GIVEN TO THE EDGES OF WORK AREAS ALONG WALLS AND CORNERS TO ENSURE THAT ANY FUTURE ACM INSPECTIONS DON'T PRODUCE FALSE POSITIVE RESULTS FOR THE ABATED SPACES.

8. AT ALL LOCATIONS WHERE ACM ABATEMENT IS INDICATED, REMOVAL SHALL EXTEND IN ALL DIRECTIONS TO SUFFICIENT DIMENSIONS TO PROVIDE AN ACM FREE ZONE FOR SUBSEQUENT WORK BY OTHER TRADES. PARTICULAR ATTENTION SHOULD BE PAID TO EDGES OF REMAINING ACM TO ENSURE CLEAN AND SEALED EXPOSED SURFACES

9. ALL ACM REMOVAL SHALL BE CONDUCTED WITHIN A NPE USING WET METHODS. THE AIR PRESSURE INSIDE THE CONTAINMENT SHALL BE MAINTAINED AT 0.02 INCHES OF WATER LESS THAN THE AIR PRESSURE OUTSIDE THE CONTAINMENT. TO THE FULLEST EXTENT FEASIBLE ALSO CONDUCT ANY REQUIRED HVAC SYSTEM ABATEMENT IN THE AFFECTED ROOM/AREA WHILE THE DRYWALL ABATEMENT NPE IS IN PLACE.

10. AT PIPE INSULATION MASTIC ABATEMENT LOCATIONS ABOVE CEILINGS IN AREAS WHERE AN NPE IS NOT REQUIRED FOR OTHER ACM REMOVAL, CONDUCT THE ACM REMOVAL USING OSHA COMPLIANT CLASS 2 AND/OR GLOVEBAG PROCEDURES.

11. ABATEMENT PERSONNEL DECONTAMINATION SHALL BE CONDUCTED INSIDE AN ENCLOSED SPACE ATTACHED TO THE NPE CONTAINMENT AND SEPARATED FROM IT BY AN AIR LOCK.

12. ALL ABATEMENT WORK SHALL BE PROVIDED IN ACCORDANCE WITH 29 CFR 1926.1101. WHERE THESE NOTES INDICATE MORE STRINGENT CRITERIA THE NOTES SHALL BECOME BINDING.

13. TEMPORARY ON SITE STORAGE OF ACM WASTE SHALL BE WITHIN SECURED DUMPSTERS WITH HARD IMPERMEABLE TOPS OR LOCKABLE FULLY ENCLOSED TRUCK OR VAN COMPARTMENTS. FULLY LINE THE INTERIOR STORAGE CONTAINER SURFACES WITH AT LEAST TWO LAYERS OF AT LEAST 6 MIL THICK POLY SHEETING. MOVEMENT OF ACM WASTE FROM THE REMOVAL LOCATIONS TO THE STORAGE/TRANSPORT CONTAINER LOCATION SHALL BE VIA A POLY–LINED IMPERMEABLE CART.

LEAD CONTAINING PAINTS/MATERIALS GENERAL NOTES

LCP = LEAD CONTAINING PAINT
LCM = LEAD CONTAINING MATERIALS

1. A PRE–RENOVATION LEAD PAINT INSPECTION WAS CONDUCTED FOR THIS PROJECT. ONLY VERY LOW LEVELS (< 1.0 MG/CM^2) OF LEAD WERE IDENTIFIED IN PAINTS APPLIED TO MOST OF THE INTERIOR BUILDING MATERIALS THAT WERE TESTED.

2. LEAD CONCENTRATIONS GREATER THAN 1.0 MG/CM^2 WERE DETECTED IN COATINGS APPLIED TO THE FOLLOWING COMPONENTS LISTED BELOW.

   –GLAZING ON PORCELAIN MOP SINKS.
   –PAINT APPLIED TO METAL DOORS, DOOR FRAMES, LADDERS, CABINETRY & HANDRAILS.
   –PAINT APPLIED TO STRUCTURAL STEEL.
   –PAINT APPLIED TO GYPSUM BOARD WALLS.
   –PAINT APPLIED TO WOOD PANEL WALLS.

3. THE CONTRACTOR SHALL CONDUCT ALL ABATEMENT, RENOVATION, AND CONSTRUCTION ACTIVITIES IN A MANNER THAT MINIMIZES LEAD DEBRIS AND AIRBORNE LEAD DUST AND FUMES. CONTROLS SHALL INCLUDE WORK AREA PERIMETER DUST BARRIERS, AND LOCALIZED DUST COLLECTION SYSTEM SUPPORTED BY HEPA FILTERED VENTILATION AND EXHAUST EQUIPMENT.

4. ALL WORK SHALL COMPLY WITH THE OSHA LEAD IN CONSTRUCTION STANDARD 29 CFR 1926.62.

5. PRIOR TO COMMENCEMENT OF ACM ABATEMENT AND RENOVATION/ DEMOLITION OPERATIONS, THE CONTRACTOR SHALL SUBMIT A LEAD COMPLIANCE PLAN IN ACCORDANCE WITH 29 CFR 1926.62 TO ADDRESS OPERATIONS BY ALL TRADES THAT PERFORM WORK IMPACTING THE EXISTING LCM. THE PLAN SHALL ALSO ADDRESS LEAD WASTE MANAGEMENT.

6. DURING RENOVATON/DEMOLITION OPERATIONS IMPACTING LCP/LCM, THE CONTRACTOR SHALL EMPLOY AN INDEPENDENT INDUSTRIAL HYGIENE TECHNICIAN TO CONDUCT EXPOSURE MONITORING PER 29 CFR 1926.62 AND DAILY WORK AREA AIR MONITORING TO DOCUMENT THAT LEAD WORKERS AND OTHERS IN ADJACENT AREAS ARE NOT EXPOSED TO LEAD IN EXCESS OF THE OSHA PERMISSIBLE EXPOSURE LIMIT (PEL.)

7. THE CONTRACTOR SHALL EMPLOY THE SERVICES OF AN ABIH CERTIFIED INDUSTRIAL HYGIENIST (CIH) TO PREPARE THE ABOVE–REFERENCED LEAD COMPLIANCE PLAN. ALSO THE CIH SHALL SUPERVISE THE MONITORING SERVICES.

PCB & MERCURY GENERAL NOTES

1. DURING A PRE–RENOVATION INSPECTION, VARIOUS FLUORESCENT LIGHT FIXTURES WERE OPENED AND INSPECTED FOR INDICATIONS OF PCB BALLASTS. NO EVIDENCE OF PCB BALLASTS WAS OBSERVED. HOWEVER, IT IS THE CONTRACTOR'S RESPONSIBILITY TO CAREFULLY INSPECT ALL BALLASTS. IF ANY PCB BALLASTS OR OLD OIL COOLED BALLASTS WITHOUT LABELS STATING "NO PCBS" ARE DISCOVERED, THEY SHALL BE CAREFULLY REMOVED, PACKAGED, AND DISPOSED IN ACCORDANCE WITH 40 CFR PART 761.

2. ALL FLUORESCENT LIGHT FIXTURE LAMPS SHALL BE CAREFULLY REMOVED, PACKAGED, AND PROPERLY RELINQUISHED FOR RECYCLING OR DISPOSED IN ACCORDANCE WITH UNIVERSAL WASTE REGULATIONS 40 CFR PART 273.

ASBESTOS ABATEMENT LEGEND / KEY NOTES

ACM = ASBESTOS CONTAINING MATERIAL
NAM = NON–ASBESTOS CONTAINING MATERIAL

(1) REMOVE BLACK ACM MASTIC APPLIED BELOW MEMBRANE ON PARAPET WALLS AT THE MAIN ROOF AND NORTH ROOF

(2) REMOVE BLACK ACM CAULKING MATERIAL APPLIED TO THE INTERIOR SIDE OF METAL WINDOW PANES AT THE INTERFACE OF GLASS 7 METAL WINDOWS LOCATED IN THE NORTHERN ATRIUM.

(3) REMOVE BROWN ACM CAULKING MATERIAL APPLIED TO DOOR FRAMES AT THE METAL FRAME & PLASTER WALL INTERFACE IN BATHROOMS AND JANITORIAL CLOSETS IN ROOMS 102, 103, 118, 119, 123, 124, 125, 181, 183, 184, 190, 191, 192, 193, 194, 195, 197 & 198.

(4) REMOVE WHITE/CREAM ACM MASTIC APPLIED TO ENDS AND SEAMS OF PAPER FOIL FACED FIBERGLASS PIPE INSULATION IN WALL CAVITIES OF ROOMS 113, 158 AND CEILING CAVITIES OF ROOMS 178 AND 181.

(5) REMOVE WHITE/CREAM ACM MASTIC APPLIED TO FITTINGS OF DOMESTIC WATER LINES AND OLD STEAM LINE PIPING SYSTEMS IN ROOMS 102, 103, 104, 105, 106, 118, 119, 120, 123, 124, 125, 127, 128, 129, 130, 131, 133, 145, 148, 149, 150, 151, 175,178, 180, 181, 183,190, 191,195, 198, 203, 204, 206, 207, 209, 210, 211, 213, & 217.

(6) REMOVE RESIDUAL FLOORING MASTIC AND LEVELING COMPOUND APPLIED TO EXPANSION JOINTS AT CONCRETE FLOORS IN ROOMS 122, 152, 156, 159, 186, AND 187.

(7) REMOVE ACM SINK UNDERCOATING APPLIED TO BOTTOM OF STAINLESS STEEL SINKS IN ROOMS 158 AND 192.

(8) REMOVE ACM BLACK MASTIC ON SEAMS AND FITTINGS OF FOAM GLASS INSULATION LOCATED IN THE CEILING PLENUM OF CORRIDOR 143 AND PROTRUDING FROM THE CONCRETE FLOOR SLAB IN MECHANICAL ROOMS 149 AND 178.

SPECIAL ASBESTOS ABATEMENT NOTES:

1. WITH REGARD TO ACM REMOVAL AS DESCRIBED ABOVE, REFER TO MECHANICAL DEMOLITION DRAWINGS FOR EXTENT OF HVAC DEMOLITION WORK, AND TO MECHANICAL DRAWINGS FOR EXTENT OF NEW HVAC WORK. REFER TO ELECTRICAL DRAWINGS FOR EXTENT OF ELECTRICAL COMPONENT REMOVAL AND INSTALLATION. REFER TO ARCHITECTURAL DRAWINGS FOR EXTENT OF DEMOLITION AND NEW WORK, WHICH PRIMARILY INCLUDES REMOVAL OF WALL SECTIONS AND/OR DOORWAYS, AND INSTALLATION OF NEW WALL SECTIONS AND/OR DOORWAYS.

Safety Environmental Laboratories and Consulting, Inc.
SELC
989 Yeager Parkway
Pelham, AL 35124
(205) 823–6200 fax (205) 823–9066

US Army Corps of Engineers
Mobile District

Symbol	No.	Description	Date	Approved
		Revisions		

Designed By: WBS	Date: 06 - 29 - 2021
Drawn By: NEA	File No.
Checked By: WBS	I.S.O. Sheet File Name:
Reviewed By:	Solicitation Number:

U.S. ARMY ENGINEER DISTRICT
CORPS OF ENGINEERS
MOBILE, ALABAMA

ARTC B640 RENOVATION
FEMA - DHS - CDP, ANNISTON, AL

ABATEMENT NOTES

SHEET IDENTIFICATION
H-101
SHEET 6 of 442

C:\Users\vtda_j\Documents\20002 - A_julian.vtda.rvt
12/3/2020 10:46:20 AM

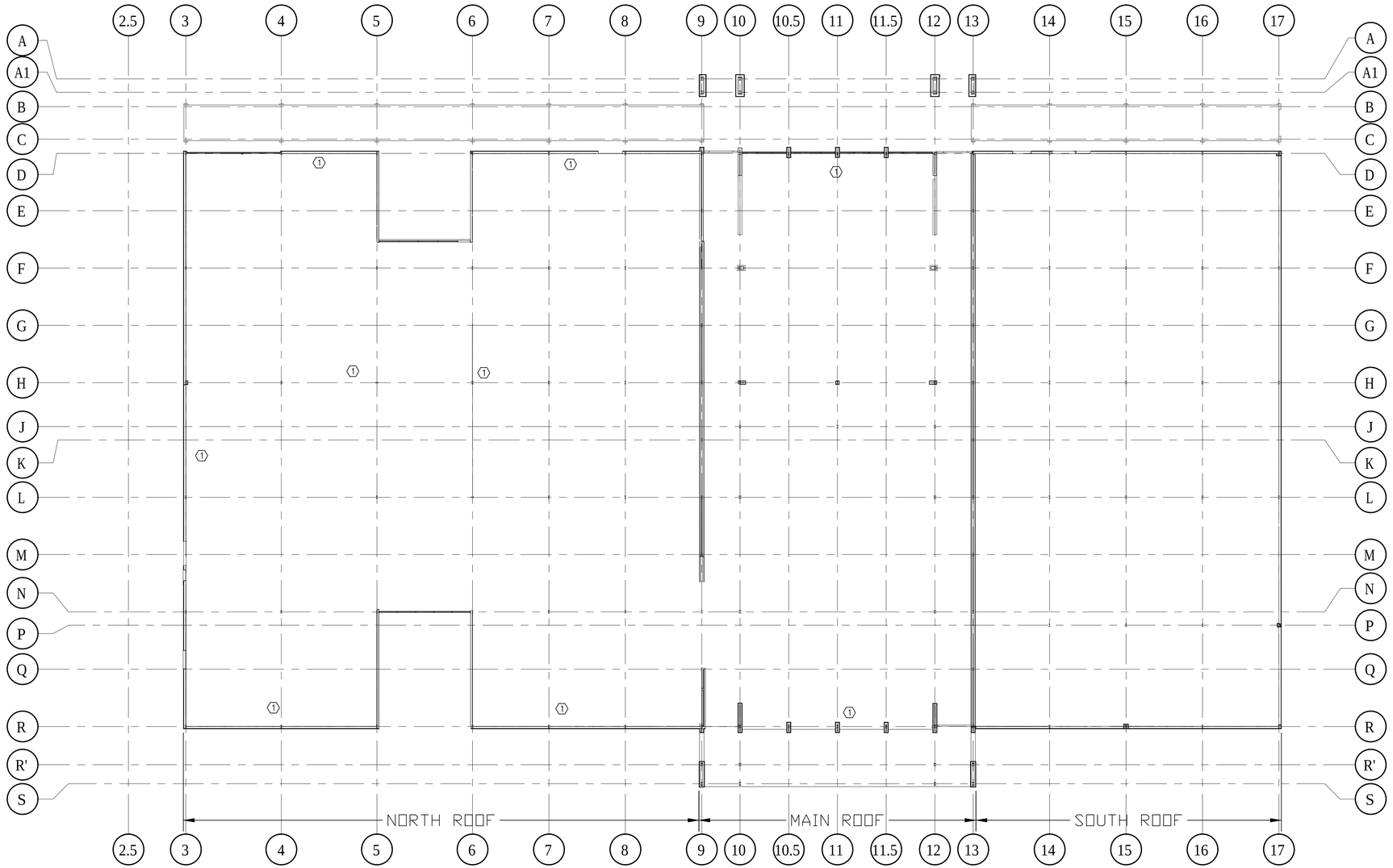

EXISTING ROOF PLAN

0 8' 16' 32'

SCALE: 1/16"=1'-0"

PLAN NORTH

NOTE:
FOR ASBESTOS ABATEMENT LEGEND / KEY NOTES, SEE SHEET H-101

[redacted]

FIRST FLOOR KEY PLAN

US Army Corps of Engineers
Mobile District

Symbol	No.	Description	Date	Approved
		Revisions		

Date: 06 - 29 - 2021
File No.
I.S.O. Sheet File Name:
Solicitation Number:

Designed By: WBS
Drawn By: NEA
Checked By: WBS
Reviewed By:

U.S. ARMY ENGINEER DISTRICT
CORPS OF ENGINEERS
MOBILE, ALABAMA

ARTC B640 RENOVATION
FEMA - DHS - CDP, ANNISTON, AL

EXISTING ROOF PLAN

SHEET IDENTIFICATION
H-151
SHEET 7 of 442

C:\Users\wda_l\Documents\20002 - A_julian.vda.rvt
12/3/2020 10:46:20 AM

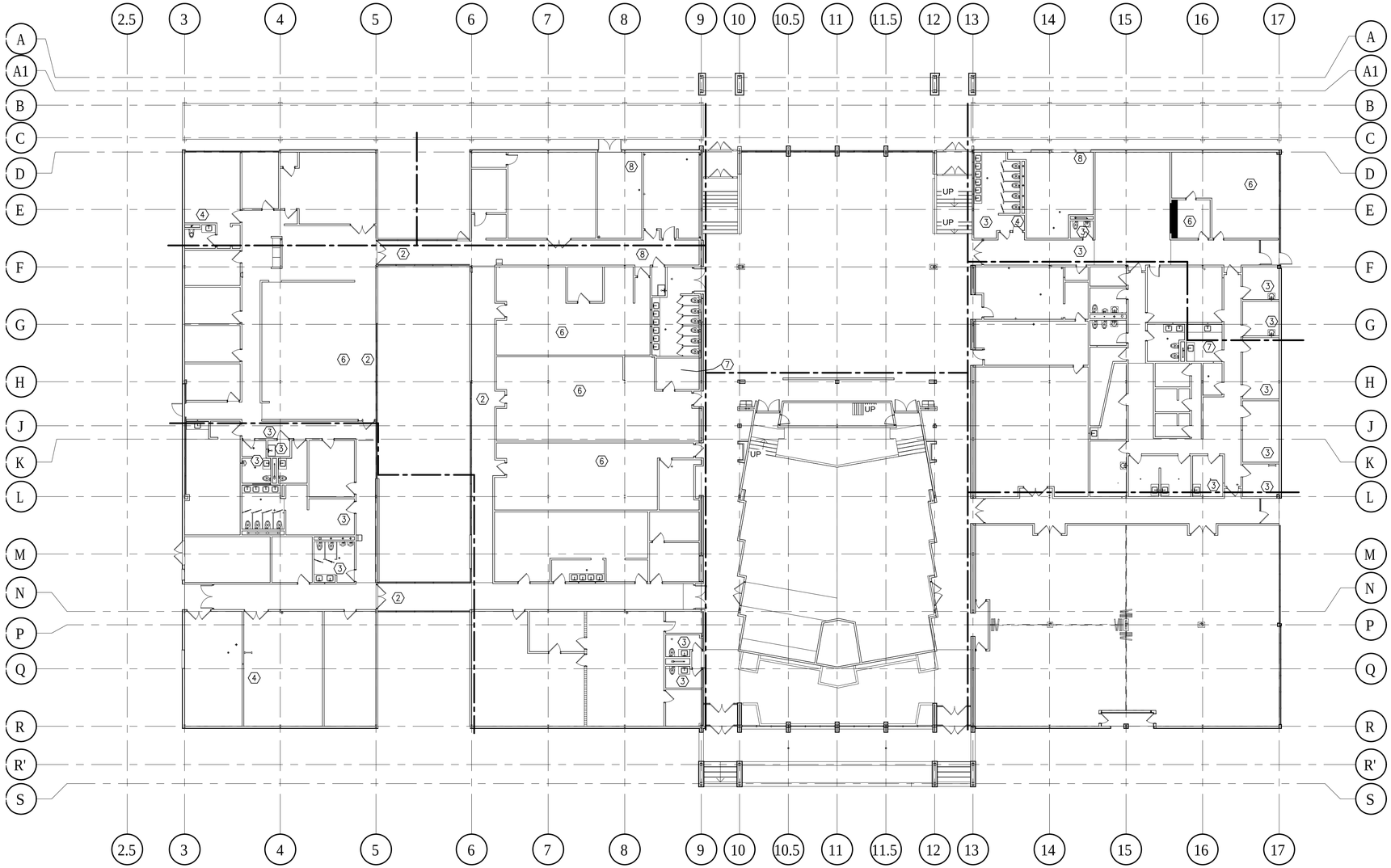

NOTE:
FOR ASBESTOS ABATEMENT LEGEND / KEY NOTES, SEE SHEET H-101



FIRST FLOOR KEY PLAN

PLAN NORTH

EXISTING FIRST FLOOR PLAN

0 8' 16' 32'
SCALE: 1/16"=1'-0"

US Army Corps of Engineers
Mobile District

Symbol	No.	Description	Date	Approved
		Revisions		

Date: 06 - 29 - 2021
File No.
I.S.O. Sheet File Name:
Solicitation Number:

Designed By: WBS
Drawn By: NEA
Checked By: WBS
Reviewed By:

U.S. ARMY ENGINEER DISTRICT
CORPS OF ENGINEERS
MOBILE, ALABAMA

ARTC B640 RENOVATION
FEMA - DHS - CDP, ANNISTON, AL

EXISTING FIRST FLOOR PLAN

SHEET IDENTIFICATION
H-152
SHEET 8 of 442

C:\Users\vida_l\Documents\20002 - A_julian.vida.rvt
12/3/2020 10:46:20 AM



NOTE:
FOR ASBESTOS ABATEMENT LEGEND / KEY NOTES, SEE SHEET H-101



FIRST FLOOR KEY PLAN

PLAN NORTH

EXISTING FIRST FLOOR PLAN

SCALE: 1/16"=1'-0"

US Army Corps of Engineers
Mobile District

Symbol	No.	Description	Date	Approved
		Revisions		

Date: 06 - 29 - 2021
File No.
I.S.O. Sheet File Name:
Solicitation Number:

Designed By: WBS
Drawn By: NEA
Checked By: WBS
Reviewed By:

U.S. ARMY ENGINEER DISTRICT
CORPS OF ENGINEERS
MOBILE, ALABAMA

ARTC B640 RENOVATION
FEMA - DHS - CDP, ANNISTON, AL

EXISTING FIRST FLOOR PLAN

SHEET IDENTIFICATION
H-153
SHEET 9 of 442

C:\Users\vida_l\Documents\20002 - A_julian.vida.rvt
12/3/2020 10:46:20 AM



NOTES:

1. CONTRACTOR SHALL USE GATE ON McCLELLAN BLVD FOR ACCESS.
2. THERE ARE NO SPOIL AREAS OR BORROW PIT AREAS ON BASE.
3. CONTRACTOR SHALL REMOVE ALL CONSTRUCTION DEBRIS OFF BASE.
4. COORDINATE AND OBTAIN APPROVAL FROM THE CONTRACTING OFFICER FOR HAUL ROUTE, WORK SITE ACCESS POINT(S), EMPLOYEE PARKING LOCATIONS, AND MATERIAL LAYDOWN AND STORAGE AREAS.

PROJECT VICINITY MAP
1 INCH = 500 FEET

PLAN NORTH

0 200' 500' 1000'
SCALE: 1"=500'

US Army Corps of Engineers
Mobile District

Symbol	No.	Description	Date	Approved
		Revisions		

ALABAMA PROFESSIONAL ENGINEER LICENSED No. 12701 DENNIS R. ALLEN
06JUNE2021

Designed By: ORA	Date: 06-29-2021
Drawn By: ORA	File No.
Checked By: DRG	I.S.O. Sheet File Name:
Reviewed By:	Solicitation Number:

U.S. ARMY ENGINEER DISTRICT
CORPS OF ENGINEERS
MOBILE, ALABAMA

ss&a CLARKNEXSEN

ARTC B640 RENOVATION
FEMA - DHS - CDP, ANNISTON, AL

PROJECT VICINITY MAP

SHEET IDENTIFICATION
C-001
SHEET 10 of 442

GENERAL NOTES

1. THE AREA WITHIN CONSTRUCTION LIMITS AND NEW UTILITY ROUTES SHALL BE THE LIMITS OF NEW CONSTRUCTION.
2. PRIOR TO ANY GROUND DISTURBANCE ACTIVITIES, THE CONTRACTOR SHALL OBTAIN A DIGGING PERMIT FROM PUBLIC WORKS DEPARTMENT (PWD) PRIOR TO THE START OF EXCAVATION BY CONTACTING THE CONTRACTING OFFICER 30 CALENDAR DAYS IN ADVANCE.
3. PRIOR TO THE START OF ANY GROUND DISTURBANCE ACTIVITIES, THE CONTRACTOR SHALL FIELD VERIFY THE EXACT LOCATION AND DEPTH OF ALL EXISTING UTILITIES THAT ARE WITHIN THE LIMITS OF NEW CONSTRUCTION. COORDINATE UTILITY LOCATIONS WITH THE CONTRACTING OFFICER.
4. ANY EXISTING FEATURE, STRUCTURE, SIDEWALK, CURB/GUTTER, PAVEMENT, UTILITY, ETC. DISTURBED OR DAMAGED DURING CONSTRUCTION, WHICH ARE TO REMAIN, SHALL BE RESTORED TO A CONDITION THAT IS EQUAL TO OR BETTER THAN ORIGINAL CONDITION AT THE EXPENSE OF THE CONTRACTOR.
5. THE UNDERGROUND PIPES, CABLES OR DUCT LINES KNOWN TO EXIST AS INDICATED BY UTILITY MAPS, TOPOGRAPHIC SURVEY, AND FROM AS-BUILT DRAWING RECORDS ARE INDICATED ON THE PLANS. THE CONTRACTOR SHALL VERIFY THE LOCATIONS AND DEPTHS OF ALL FACILITIES AND EXERCISE PROPER CARE IN EXCAVATING IN THE AREA. WHEREVER CONNECTIONS OF NEW UTILITIES TO EXISTING UTILITIES ARE SHOWN ON THE PLANS, THE CONTRACTOR SHALL EXPOSE THE EXISTING LINES AT THE PROPOSED CONNECTIONS TO VERIFY THEIR LOCATION, SIZE AND DEPTH PRIOR TO EXCAVATION FOR THE NEW LINES.
6. THE CONTRACTOR SHALL PROVIDE SAFE ACCESS TO AND FROM ALL DRIVEWAYS AND STREETS. ACCESS TO ALL EXISTING DRIVEWAYS, PAVED OR UNPAVED, SHALL BE PROVIDED AT ALL TIMES DURING CONSTRUCTION. SIDEWALKS AND PEDESTRIAN PATHWAYS SHALL REMAIN OPEN AND PROTECTED. IF WORK IS REQUIRED WITHIN PEDESTRIAN AREAS, PROVIDE RE-ROUTING AROUND AFFECTED AREAS.

EROSION CONTOL AND SEDIMENT CONTROL NOTES

1. THE CONTRACTOR SHALL OBSERVE ALL STATE OF ALABAMA DEPARTMENT OF ENVIRONMENTAL MANAGEMENT (ADEM) REQUIREMENTS AS TO SEDIMENT RUNOFF CONTROL, MONITORING AND REPORTING. THE CONTRACTOR SHALL UTILIZE "BEST MANAGEMENT PRACTICES" TO PREVENT SEDIMENT FROM LEAVING THE CONSTRUCTION SITE AND ENTERING NEIGHBORING PRIVATE PROPERTY, STATE HIGHWAYS, CITY STREETS OR STORM DRAINAGE SYSTEMS. ANY MUD OR SEDIMENT TRACKED ON TO ANY ROADWAYS OR PARKING AREAS SHALL BE PROMPTLY REMOVED BY THE CONTRACTOR. ALL EROSION AND SEDIMENT CONTROL COSTS ARE THE CONTRACTOR'S RESPONSIBILITY AND SHOULD BE INCLUDED IN THE PROJECT BID. CONTRACTOR SHOULD MAINTAIN A COPY OF THE STATE OF ALABAMA HANDBOOK FOR EROSION CONTOL, SEDIMENT CONTROL AND STORMWATER MANAGEMENT ON CONSTRUCTION SITES AND URBAN AREAS, VOLUME 2 FOR REFERENCE TO BEST MANAGEMENT PRACTICES.
2. THE EROSION AND SEDIMENT CONTROL PLAN INCLUDED IN THIS SET OF PLANS SHOULD NOT BE CONSIDERED ALL INCLUSIVE BUT ONLY THE MINIMUM REQUIREMENTS. THE LOCATION OF SILT FENCING ON THE DRAWING IS CONSIDERED THE MINIMUM AMOUNT OF SILT FENCING REQUIRED AT THE START OF THE PROJECT TO PROTECT THE SURROUNDING AREAS FROM SEDIMENT. IT IS THE RESPONSIBILITY OF THE CONTRACTOR TO ADD ADDITIONAL SILT FENCING AND ADJUST THE LOCATION OF THE SILT FENCING AND/OR TO EMPLOY OTHER CONTROL METHODS AS REQUIRED TO PROVIDE EFFECTIVE EROSION AND SEDIMENT CONTROL.

   THE CONTRACTOR SHALL PROTECT ALL EXISTING GRASSED AREAS NOT IN THE LIMITS OF NEW CONSTRUCTION FROM DAMAGE BY EQUIPMENT, CONSTRUCTION ACTIVITIES AND THE CONTRACTOR'S PERSONNEL. THE CONTRACTOR SHALL NOT DISTURB ANY LARGER AN AREA THAN IS REQUIRED TO COMPLETE THE CURRENT CONSTRUCTION TASKS AND SHALL STABILIZE ALL DISTURBED AREAS AS SOON AS POSSIBLE FOLLOWING COMPLETION OF CONSTRUCTION ACTIVITIES.

   THE CONTRACTOR SHALL INSTALL AND MAINTAIN EROSION AND SEDIMENT CONTROL DEVICES AS NECESSARY UNTIL ADEQUATE VEGETATION IS PRESENT TO PREVENT SOIL EROSION. THE CONTRACTOR SHALL PROVIDE INLET PROTECTION AT ALL INLETS INTO THE STORM SEWER SYSTEM.

   THE CONTRACTOR SHALL INSPECT AND MAINTAIN ALL EROSION AND SEDIMENT CONTROL DEVICES AND PRACTICES. INSPECTIONS SHALL BE PERFORMED AS LEAST ONCE EVER 7 CLAENDAR DAYS AND WITHIN 24 HOURS OF THE END OF A RAINFALL EVENT OF 1/2 INCH OR GREATER.

   UPON COMPLETION OF THE REQUIRED WORK, THE CONTRACTOR SHALL DISTRIBUTE TOPSOIL, FINE GRADE AND PROMPTLY STABILIZE ALL DISTURBED AREAS. THE CONTRACTOR SHALL REFER TO THE SITE LANDSCAPING PLANS AND SPECIFICATIONS TO DETERMINE THE LOCATION AND TYPE OF PERMANENT GROUND COVER. SOD SHALL BE PLACED AS PRESCRIBED IN THE SITE LANDSCAPING PLANS TO ALL DISTURBED AREAS WHERE REQUIRED AS SOON AS POSSIBLE.

   AFTER THE PERMANENT STABILIZATION OF THE SITE AND WITH THE PERMISSION OF THE ARCHITECT AND/OR ENGINEER, THE CONTRACTOR SHALL REMOVE AND DISPOSE OF ALL SEDIMENTATION/EROSION CONTROL DEVICES. DISPOSAL SHALL BE IN AN APPROVED MANNER AND ALL COSTS ASSOCIATED WITH REMOVAL/DISPOSAL SHALL BE BORNE SOLELY BY THE CONTRACTOR.

CONSTRUCTION NOTES

1. THE CONTRACTOR SHALL PROTECT ALL EXISTING UTILITIES WHETHER SHOWN ON THE PLANS OR NOT. BEFORE DISRUPTING SERVICE OF ANY UTILITY, THE CONTRACTOR SHALL CONTACT THE CONTRACTING OFFICER AND THE RESPONSIBLE UTILITY AUTHORITY. DAMAGE TO EXISTING UTILITIES AS A RESULT OF CONSTRUCTION ACTIVITIES SHALL BE REPAIRED IMMEDIATELY BY THE CONTRACTOR AT NO ADDITIONAL COST TO THE GOVERNMENT AND AT NO COST TO THE AFFECTED UTILITY AUTHORITY.
2. UNLESS INDICATED OTHERWISE, EXISTING UTILITIES SHALL REMAIN IN SERVICE AND IN PLACE. IF RELOCATION OF EXISTING UTILITIES IS FOR THE CONTRACTOR'S CONVENIENCE, INTERRUPTION OF SERVICE SHALL BE KEPT TO A MINIMUM AND SHALL BE DONE AT THE CONTRACTOR'S EXPENSE, AND ONLY WITH THE WRITTEN APPROVAL OF THE CONTRACTING OFFICER. PRIOR TO RELOCATING EXISTING UTILITIES, THE CONTRACTOR SHALL COORDINATE THE WORK WITH THE CONTRACTING OFFICER IN ORDER TO MINIMIZE DISRUPTIONS.
3. THE CONTRACTOR SHALL OBSERVE AND COMPLY WITH ALL STATE EPA REQUIREMENTS AND FEDERAL AND LOCAL LAWS REQUIRED FOR THE PROTECTION OF PUBLIC HEALTH, SAFETY, AND ENVIRONMENTAL QUALITY.
4. THE CONTRACTOR SHALL PROVIDE, INSTALL AND MAINTAIN ALL NECESSARY SIGNS, BARRICADES AND OTHER PROTECTIVE FACILITIES AND SHALL TAKE ALL NECESSARY PRECAUTIONS FOR THE PROTECTION, CONVENIENCE AND SAFETY OF THE PUBLIC.
5. THE CONTRACTOR, AT HIS/HER OWN EXPENSE, SHALL KEEP THE PROJECT AND ITS SURROUNDING AREAS FREE FROM DUST NUISANCE. THE WORK SHALL BE IN CONFORMANCE WITH THE SPECIFICATIONS AND AIR POLLUTION STANDARDS OF THE STATE ENVIRONMENTAL PROTECTION AGENCY. THE CONTRACTING OFFICER MAY REQUIRE SUPPLEMENTARY MEASURES AS NECESSARY.
6. IN THE EVENT ANY ARTIFACTS OR HUMAN REMAINS ARE UNCOVERED DURING CONSTRUCTION OPERATION, THE CONTRACTOR SHALL IMMEDIATELY SUSPEND WORK AND NOTIFY THE CONTRACTING OFFICER.
7. THE CONTRACTOR SHALL BE RESPONSIBLE FOR CONFORMANCE WITH THE APPLICABLE PROVISIONS OF THE WATER QUALITY STANDARDS AND WATER POLLUTION CONTROL STANDARDS OF THE STATE EPA.

GRADING NOTES

1. ALL GRADING WORK SHALL BE DONE IN ACCORDANCE WITH THE PLANS AND SPECIFICATIONS.
2. THE CONTRACTOR SHALL NOT PERFORM ANY GRADING OPERATION WHICH CAUSES FALLING ROCKS, SOIL OR DEBRIS, IN ANY FORM, TO FALL, SLIDE OR FLOW INTO BASE DRAINAGE SYSTEMS, ONTO ADJOINING STREETS OR INTO NATURAL WATERCOURSES. SHOULD SUCH VIOLATIONS OCCUR, THE CONTRACTOR MAY BE CITED AND THE CONTRACTOR SHALL IMMEDIATELY MAKE ALL REMEDIAL ACTIONS NECESSARY AT NO ADDITIONAL COST TO THE GOVERNMENT.
3. ADEQUATE PROVISIONS SHALL BE MADE TO PREVENT SURFACE WATERS FROM DAMAGING THE CUT FACE OF AN EXCAVATION OR THE SLOPED SURFACES OF A FILL. FURTHERMORE, ADEQUATE PROVISIONS SHALL BE MADE TO PREVENT SEDIMENT-LADEN RUNOFF FROM LEAVING THE SITE.
4. ALL SLOPES AND EXPOSED AREAS SHALL BE SODDED OR PLANTED AS SOON AS FINAL GRADES HAVE BEEN ESTABLISHED. PLANTING SHALL NOT BE DELAYED UNTIL ALL GRADING WORK HAS BEEN COMPLETED. GRADING TO FINAL GRADE SHALL BE CONTINUOUS AND ANY AREA WITHIN WHICH WORK HAS BEEN INTERRUPTED OR DELAYED SHALL BE PLANTED.
5. FILLS ON SLOPES STEEPER THAN 5:1 SHALL BE KEYED.
6. NO GRADING WORK SHALL BE DONE ON SATURDAYS, SUNDAYS OR HOLIDAYS AT ANY TIME WITHOUT PRIOR APPROVAL OF THE CONTRACTING OFFICER.
7. THE LIMITS OF THE AREA TO BE CLEARED, CLEARED AND GRUBBED, OR GRADED SHALL BE FLAGGED BY THE CONTRACTOR BEFORE THE COMMENCEMENT OF THE GRADING WORK.
8. ALL GRADING OPERATIONS SHALL BE PERFORMED IN CONFORMANCE WITH THE APPLICABLE PROVISIONS OF THE STATE EPA WATER POLLUTION CONTROL AND WATER QUALITY STANDARDS AND THE NPDES PERMIT FOR THE PROJECT.
9. TEMPORARY EROSION CONTROL PROCEDURES SHALL BE SUBMITTED TO THE CONTRACTING OFFICER FOR APPROVAL PRIOR TO APPLICATION FOR THE GRADING PERMIT.
10. DURING CONSTRUCTION, PREVENTIVE MEASURES SHALL BE USED TO CONTROL FORESEEABLE DUST, AND EROSION AND SEDIMENTATION PROBLEMS WHICH MAY ARISE AS WORK PROGRESSES. THE CONTRACTOR SHALL SPRINKLE THE SOIL AT THE SITE, HAUL ROADS, AND OTHER AREAS DISTURBED BY OPERATIONS, OR TREAT WITH DUST SUPPRESSANTS.
11. ALL EXPOSED AREAS WHICH ARE NOT AT FINAL GRADE AND WHICH ARE TO BE LEFT EXPOSED LONGER THAN 2 WEEKS SHALL BE PROTECTED FROM EROSION AND SEDIMENTATION TO THE SATISFACTION OF THE CONTRACTING OFFICER.

SITE & UTILITY DEMOLITION NOTES

1. SAW CUT ON A SMOOTH AND STRAIGHT LINE AT THE BOUNDARY BETWEEN THE EXISTING PAVEMENT (CONCRETE OR BITUMINOUS) THAT IS TO REMAIN AND THAT TO BE REMOVED.
2. ALL TRENCHES EXCAVATED FOR UTILITIES SHALL BE BACKFILLED WITH STRUCTURAL FILL AND COMPACTED IN 6 INCH LIFTS. THE LEVEL OF COMPACTION EFFORT SHALL BE AS REQUIRED IN SPECIFICATION SECTION 31 23 00.00 20, "EXCAVATION AND FILL".
3. ALL DEMOLITION DEBRIS SHALL BE REMOVED FROM THE SITE AND DISPOSED OF OFF GOVERNMENT PROPERTY. ALL DEBRIS SHALL BE DISPOSED OF IN A LANDFILL LICENSED BY THE STATE TO RECEIVE THE SPECIFIC DEMOLITION DEBRIS. CONTRACTOR IS RESPONSIBLE FOR ANY PERMITS OR FEES ASSOCIATED WITH DISPOSAL OF DEMOLISHED AND REMOVED MATERIALS IN ACCORDANCE WITH LOCAL REGULATIONS.
4. THE BURNING OF CONSTRUCTION DEBRIS OR TRASH ON GOVERNMENT PROPERTY IS FORBIDDEN.
5. ANY TYPE OF BLASTING ON THIS PROJECT IS FORBIDDEN.
6. DEMOLISH AND REMOVE ALL UNDERGROUND UTILITIES AS SHOWN ON THE PLANS. PRIOR TO DEMOLITION, COORDINATE WITH UTILITY PROVIDERS AND OWNER AS NECESSARY FOR VALVE CLOSURES, RE-ROUTING ETC. SEE ELECTRICAL AND COMMUNICATION SHEETS FOR ADDITIONAL UTILITY REQUIREMENTS.
7. PROVIDE TEMPORARY UTILITY MEASURES AS REQUIRED.
8. REFER TO THE SPECIFICATIONS FOR UTILITY OUTAGE REQUIREMENTS.
9. COORDINATE DEMOLITION OF ALL ITEMS WITH PROPOSED IMPROVEMENTS.
10. DEMOLISH AND REMOVE ALL EXISTING STRUCTURES TO BOTTOM OF FOUNDATION. FOUNDATION PILES SHALL BE REMOVED TO 2 FEET BELOW FINISHED GRADE.
11. ALL UNDERGROUND UTILITIES, INCLUDING MECHANICAL PIPING, COMMUNICATIONS, AND ELECTRICAL DUCTS, SHALL BE INSTALLED BENEATH THE BUILDING FOOTINGS IN ACCORDANCE WITH "TYPICAL UTILITY BENEATH FOOTINGS DETAIL" LOCATED ON SHEET CU503

GEOTECHNICAL INVESTIGATION NOTES

1. GEOTECHNICAL RECOMMENDATIONS FOR THIS SUBMITTAL ARE INCLUDED WITH THE GEOTECHNICAL REPORT IN THE APPENDIX OF THE BASIS OF DESIGN. THE RECOMMENDATIONS ARE REFLECTED IN SPECIFICATION SECTION 31 23 00.00 20 "EXCAVATION AND FILL".
2. BORING LOCATIONS ARE INDICATED IN THE GEOTECHNICAL REPORT FOR THIS SUBMITTAL.

US Army Corps of Engineers
Mobile District

Symbol	No.	Description	Date	Approved
		Revisions		

ALABAMA PROFESSIONAL LICENSED No. 12701 ENGINEER
DENNIS R. ALLEN
06JUNE2021

Designed By: ORA
Drawn By: ORA
Checked By: DRG
Reviewed By:

Date: 06-29-2021
File No.
I.S.O. Sheet File Name:
Solicitation Number:

U.S. ARMY ENGINEER DISTRICT
CORPS OF ENGINEERS
MOBILE, ALABAMA

ss&a CLARKNEXSEN

ARTC B640 RENOVATION
FEMA - DHS - CDP, ANNISTON, AL

GENERAL NOTES

SHEET IDENTIFICATION
C-002
SHEET 11 of 442

UTILITY NOTES

1. ADJUST TOP ELEVATIONS OF EXISTING CLEANOUTS, VALVES, AND MANHOLES, ETC OF ALL UTILITIES, THAT ARE TO REMAIN, TO FLUSH WITH FINISHED GRADE. FOR UTILITIES THAT ARE TO REMAIN, REPLACE ALL UTILITY FRAME AND COVERS WITH H–20 TRAFFIC RATED.
2. TRENCH EXCAVATION SHALL COMPLY WITH CURRENT OCCUPATIONAL SAFETY AND HEALTH ADMINISTRATION (OSHA) REGULATIONS.
3. PROVIDE NEW UTILITIES IN A MANNER TO PREVENT THE INTERRUPTION OF SERVICE TO ANY PART OF THE BASE OR TO ADJACENT BUILDINGS.
4. THE CONTRACTOR SHALL GIVE THE CONTRACTING OFFICER WRITTEN NOTICE PRIOR TO MAKING ANY CONNECTIONS TO EXISTING UTILITIES, AND RECEIVE WRITTEN APPROVAL FROM THE CONTRACTING OFFICER TO BEGIN WORK. SEE SPECIFICATION SECTION 01 14 00.
5. ANY UTILITIES TO BE ABANDONED IN PLACE SHALL BE PLUGGED AND FILLED WITH EXPANSIVE GROUT. GROUT SHALL HAVE A MINIMUM COMPRESSIVE STRENGTH OF 3,000 PSI.
6. PAINT ALL EXPOSED PIPE, BACKFLOW PREVENTERS, ETC., AS FOLLOWS: FIRE SUPPLY (RED), DOMESTIC WATER (BLUE).
7. PROVIDE BACKFLOW PREVENTER CERTIFICATION AND LICENSED CERTIFIER'S CREDENTIALS. CONTRACTOR SHALL DELIVER COMPLETED TEST CERTIFICATES TO THE CONTRACTING OFFICER.

WATER DISTRIBUTION NOTES

1. THE CONTRACTOR SHALL BE RESPONSIBLE FOR THE PROTECTION OF ALL WATER LINES DURING CONSTRUCTION. THE CONTRACTOR SHALL BE ESPECIALLY CAREFUL WHEN EXCAVATING BEHIND WATER LINES, TEES AND BENDS WHEREVER THERE IS A POSSIBILITY OF WATER LINE MOVEMENT DUE TO THE REMOVAL OF THE SUPPORTING EARTH BEYOND THE EXISTING THRUST BLOCKS. THE CONTRACTOR SHALL TAKE WHATEVER MEASURES NECESSARY TO PROTECT THE WATER LINES, SUCH AS CONSTRUCTING SPECIAL REACTION BLOCKS (WITH THE CONTRACTING OFFICER'S APPROVAL) AND/OR MODIFYING HIS/HER CONSTRUCTION METHOD.
2. CONCRETE THRUST BLOCKS ARE NOT PERMITTED FOR JOINT RESTRAINT OF NEW FIRE WATER MAINS SHOWN ON THE UTILITY SHEETS. ALL JOINTS ARE TO BE RESTRAINED PER SPECIFICATION SECTION 33 11 00 WATER DISTRIBUTION FOR JOINT RESTRAINT REQUIREMENTS. CONCRETE THRUST BLOCKS ARE REQUIRED AS INDICATED ON DETAILS FOR FIRE HYDRANTS AND VALVES BUT ARE NOT INTENDED FOR JOINT RESTRAINT.
3. CONCRETE THRUST BLOCKS ARE PERMITTED AND REQUIRED AT CONNECTION POINTS TO EXISTING WATER MAINS AND WATER MAINS THAT ARE BEING PLUGGED/CAPPED.

SANITARY SEWER NOTES

1. THE CONTRACTOR SHALL BE RESPONSIBLE FOR ANY SEWAGE SPILLS CAUSED DURING CONSTRUCTION. THE CONTRACTOR SHALL NOTIFY THE CONTRACTING OFFICER AND UTILIZE APPROPRIATE SAMPLING AND ANALYZING PROCEDURES. THE CONTRACTOR SHALL BE RESPONSIBLE FOR ALL PUBLIC NOTIFICATIONS.
2. WHEN CONNECTING TO A LIVE SEWER LINE, THE CONTRACTOR SHALL ABIDE BY ALL CONDITIONS THAT THE STATE EPA SETS FORTH TO MITIGATE ANY WASTEWATER SPILL THAT MAY OCCUR. THE CONTRACTOR SHALL INFORM THE CONTRACTING OFFICER FIVE (5) WORKING DAYS PRIOR TO THE ACTUAL CONNECTION. THE CONTRACTOR SHALL BE RESPONSIBLE FOR ANY FINES AND PENALTIES DUE TO ANY SPILLS RESULTING FROM THE CONNECTION.

TRAFFIC NOTES

1. THE CONTRACTOR SHALL PROVIDE, INSTALL AND MAINTAIN ALL NECESSARY SIGNS AND OTHER PROTECTIVE FACILITIES, WHICH SHALL CONFORM WITH THE TRAFFIC REGULATIONS AND THE CURRENT U.S. FEDERAL HIGHWAY ADMINISTRATION'S "MANUAL ON UNIFORM TRAFFIC CONTROL DEVICES (MUTCD) FOR STREETS AND HIGHWAYS, PART 6 – TEMPORARY TRAFFIC CONTROL."
2. DURING WORKING HOURS, THE CONTRACTOR SHALL PROVIDE FOR THROUGH TRAFFIC. DURING NON–WORKING HOURS, ALL TRENCHES SHALL BE COVERED WITH A SAFE NON–SKID BRIDGING MATERIAL RATED FOR H–20 LOADING AND ALL LANES SHALL BE OPEN TO TRAFFIC.
3. THE CONTRACTOR SHALL DEVELOP AND SUBMIT TO THE CONTRACTING OFFICER FOR APPROVAL A TRAFFIC CONTROL PLAN. TRAFFIC CONTROL PLAN SHALL BE SUBMITTED 21 DAYS PRIOR TO ANY WORK WITHIN ROAD RIGHTS OF WAY.
4. THE CONTRACTOR IS RESPONSIBLE FOR REPAIRING ANY DAMAGE TO ROADWAYS AND PAVEMENT MARKINGS ON NEW ASPHALT PAVING RESULTING FROM THIS PROJECT.

ABBREVIATIONS LEGEND

ABBREVIATION	WORD
ABND	ABANDONED
AC	ASPHALTIC CONCRETE
ACU	AIR CONDITIONING UNIT
AG	ABOVE GROUND
B	BOTTOM
BC	BOTTOM OF CURB
BLDG	BUILDING
BM	BENCHMARK
BSW	BACK OF SIDEWALK
C & G	CURB & GUTTER
C.BLOCK	CONCRETE BLOCK
CB	CATCH BASIN
CWS	CONCRETE WHEEL STOP
CHW OR CW	CHILLED WATER
℄	CENTER LINE
COL	COLUMN
CMU	CONCRETE MASONRY UNIT
CO	CLEANOUT
COMM	COMMUNICATION
CONST. JT.	CONSTRUCTION JOINT
CONT	CONTINUOUS
CP	CULVERT PIPE
CT. JT.	CONTRACTION JOINT
E	EASTING
DI	DUCTILE IRON
DS	DOWNSPOUT
E.BOX	ELECTRICAL BOX
EB	ELECTRICAL BOX
EX OR EXST	EXISTING
EXP.	EXPOSED
EXP. JT.	EXPANSION JOINT
FDC	FIRE DEPARTMENT CONNECTION
FF OR FFE	FINISH FLOOR
FH	FIRE HYDRANT
G	NATURAL GAS
GEN	GENERATOR
H	HEIGHT
HC	HANDICAPPED CURB RAMP
HB	HOSE BIBB
IE	INVERT ELEVATION
INV	INVERT
IP	INLET PROTECTION
JT	JOINT
LPG	LIQUID PROPANE GAS
LP	LIGHT POLE
MP	METAL POLE
OC	ON CENTER
PED	UTILITY PEDESTAL
PEJ	PRE-MOLDED EXPANSION JOINT
PIV	POST INDICATOR VALVE
PVC	POLYVINYL CHLORIDE PIPE
Q	FLOWRATE
RCP	REINFORCED CONCRETE PIPE
RPBV	REDUCED PRESSURE BACKFLOW PREVENTER
RD	ROOF DRAIN
RDMH	ROOF DRAIN MANHOLE
RJ	RESTRAINED JOINT PIPE
REF	REFLECTOR
REQ'D	REQUIRED WORK PROVIDED BY CONTRACTOR
SCO	SANITARY CLEANOUT
SDCO	STORM DRAIN CLEANOUT
SDCB	STORM DRAIN CATCH BASIN
SDMH	STORM DRAIN MANHOLE
SMH	SANITARY MANHOLE
SH	SHEET
SS	SANITARY SEWER
SSMH	SANITARY SEWER MANHOLE
STP	STANDPIPE
SUD	SUBSURFACE DRAIN
SW	SIDEWALK
T	TOP
T.BOX	TELEPHONE BOX
TB	TELEPHONE BOX
TC	TOP OF CURB
TE	TOP ELEVATION
TP	TOP OF PIPE
TS	TOP OF STEM
UG	UNDER GROUND
UNK	UNKNOWN
W	WATER
W GV 4	WATER GATE VALVE #4
WM	WATER METER
WMH	WATER MANHOLE
WP	WOOD POST
WV	WATER GATE VALVE
XFMR	TRANSFORMER

LEGEND

DESCRIPTION	EXISTING	REQ'D	DEMOLITION	ABANDONED
BUILDING				
ASPHALT PAVING		N/A		
CONCRETE PAVING				
CONCRETE SIDEWALK			AS INDICATED	
CONCRETE CURB & GUTTER			AS INDICATED	
CONCRETE CURB			AS INDICATED	
ABANDONED WATER MAIN	W		W	
DOMESTIC WATER LINE	W	W	W	
IRRIGATION WATER LINE				
FIRE WATER LINE	FW	FW	FW	
FIRE HYDRANT & VALVE ASSEMBLY				
GATE VALVE & VALVE BOX (GV)				
WATER METER / VALVE BOX AS INDICATED				
STORM DRAIN PIPE	SD	SD	AS INDICATED	
SUBSURFACE DRAINAGE		SUD		
SANITARY SEWER	SS	SS	SS	
SANITARY SEWER MANHOLE (SSMH)	SS	SS	AS INDICATED	
SANITARY CLEANOUT (SSCO)			AS INDICATED	
ELECTRICAL SWITCH				
LIGHT POLE				
UTILITY POLE AND GUY WIRE				
AERIAL POWER	E			
UNDERGROUND POWER	E	UE	UE	
UNDERGROUND COMMUNICATIONS LINE	C	C		
COMMUNICATIONS MANHOLE	C			
POINT OF CONNECTION NEW TO EXISTING				
HIGH TEMPERATURE HOT WATER				
SIGN				
SPOT ELEVATIONS	+776.2	+776.2		
GRADE CONTOURS	776	776		
TREE				
SOIL BORING LOCATION AND NUMBER	SEE GEOTECHNICAL REPORT IN BASIS OF DESIGN FOR THIS SUBMITTAL AND SHEET C-002 FOR GEOTECHNICAL NOTES.			
BOLLARD				
POST INDICATOR VALVE (PIV)		PIV		
FIRE DEPARTMENT CONNECTION (FDC)				
DRAINAGE SWALE				
ELECTRIC MANHOLE (EMH)	E			
CHAIN LINK FENCE (CLF)				
ROOF DRAIN PIPE		RD		
NATURAL GAS MAIN		G		
FIRE DEPARTMENT CONNECTION MAIN		FDC		

NOTE: SEE VF SHEETS FOR ADDITIONAL EXISTING CONDITIONS LEGEND.

PLAN OR BUILDING NORTH
SURVEY NORTH

US Army Corps of Engineers
Mobile District

Revisions			
Symbol	No.	Description	Date
			Approved

ALABAMA PROFESSIONAL ENGINEER LICENSED No. 12701 CHRIS R. ALLEN
06JUNE2021

Designed By: ORA	Drawn By: ORA	Checked By: DRG	Reviewed By:
Date: 06-29-2021	File No.	I.S.O. Sheet File Name:	Solicitation Number:

U.S. ARMY ENGINEER DISTRICT
CORPS OF ENGINEERS
MOBILE, ALABAMA

ss&a CLARKNEXSEN

ARTC B640 RENOVATION
FEMA - DHS - CDP, ANNISTON, AL

GENERAL NOTES, LEGEND, & ABBREVIATIONS

SHEET IDENTIFICATION
C-003
SHEET 12 of 442

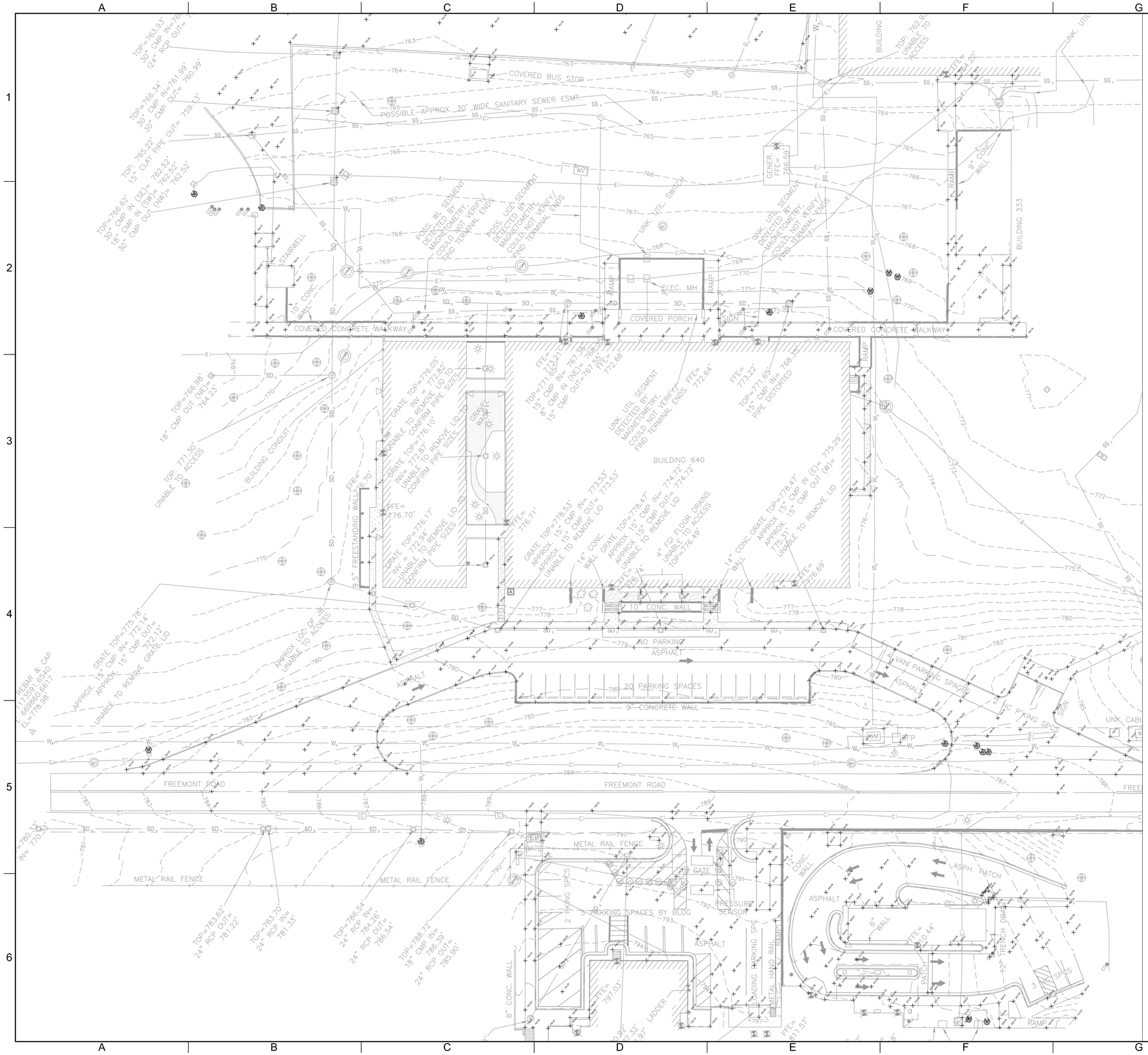

SURVEY LEGEND

- BOUNDARY LINE
- LANDS ADJOINING
- APPROX. RIGHT OF WAY
- CENTERLINE
- CANOPY OVERHANG
- POSSIBLE/ APPROX. EASEMENT MARGIN
- AERIAL UTILITY LINES
- UNDERGROUND ELECTRICAL LINE
- UNDERGROUND COMMUNICATIONS LINE
- UNDERGROUND GAS LINE
- UNDERGROUND SANITARY SEWER LINE
- APPROX. UNDERGROUND SANITARY SEWER LINE
- UNDERGROUND WATER LINE
- APPROX. UNDERGROUND WATER LINE
- UNDERGROUND FIRE WATER LINE
- UNDERGROUND NON-POTABLE WATER LINE
- UNDERGROUND CHILLED WATER SUPPLY
- UNDERGROUND CHILLED WATER RETURN
- STORM SEWER
- EXISTING FENCE AS NOTED
- 100 YR FLOOD LIMITS INFORMATIONAL ONLY
- SET 5/8" REBAR & CAP SELS #682 (or as noted)
- FOUND MONUMENT (AS NOTED)
- CONTROL POINT
- 6" RIGHT OF WAY MONUMENT
- ( ) REF. TO PREVIOUS DEED OR SURVEY MEASURE
- G.P. GRAVEL PAD AT COLUMN
- W.R. WOOD RAMP / HAND RAIL
- RAMP DIRECTIONAL ARROW
- FINISH FLOOR ELEVATION (FFE)
- CONCRETE SURFACE
- GRAVEL / CLAY SURFACE
- ASPHALT SURFACE
- CONCRETE CURB & GUTTER
- CONCRETE CURB

LEGEND

- ET ELECTRICAL TRANSFORMER
- E ELECTRICAL SWITCH / BOX / METER
- A AIR COND. UNIT
- UTILITY POLE
- GUY WIRE ANCHOR
- LIGHT POST / FLOOD LIGHT
- LIGHT POLE W/ CONC. BASE
- SANITARY SEWER MANHOLE
- CO CLEAN OUT
- SANITARY SEWER VALVE (UNKNOWN)
- IRRIGATION CONTROL VALVE
- WATER VALVE
- W WATER METER
- FIRE HYDRANT
- WATER FAUCET
- FD FIRE DEPT. CONNECTION
- WATER VAULT
- Y YARD INLET
- JB JUNCTION BOX
- CURB INLET
- GRATE INLET
- G GAS VALVE
- G GAS METER
- T TELEPHONE PEDESTAL
- TMH TELEPHONE MANHOLE
- COMM COMMUNICATION MANHOLE
- C COMMUNICATION PEDESTAL / BOX
- METAL BOLLARD
- TREE
- ROOF DRAIN
- UNKNOWN UTILITY/ ACCESS
- SIGN
- WALL (AS NOTED)

EXISTING CONDITIONS SURVEY

SCALE: AS NOTED

PLAN NORTH

0 30' 60'

SCALE: 1 INCH = 30 FEET

US Army Corps of Engineers
Mobile District

Symbol	No.	Description	Date	Approved
		Revisions		

ALABAMA PROFESSIONAL LICENSED No. 12701 ENGINEER
JAMES R. ALLEN
06JUNE2021

Designed By: ORA
Drawn By: ORA
Checked By: DRG
Reviewed By:
Date: 05-29-2021
File No.
I.S.O. Sheet File Name:
Solicitation Number:

U.S. ARMY ENGINEER DISTRICT CORPS OF ENGINEERS MOBILE, ALABAMA

ss&a CLARKNEXSEN

ARTC B640 RENOVATION
FEMA - DHS - CDP, ANNISTON, AL

EXISTING CONDITIONS SURVEY

SHEET IDENTIFICATION
VF101
SHEET 13 of 442

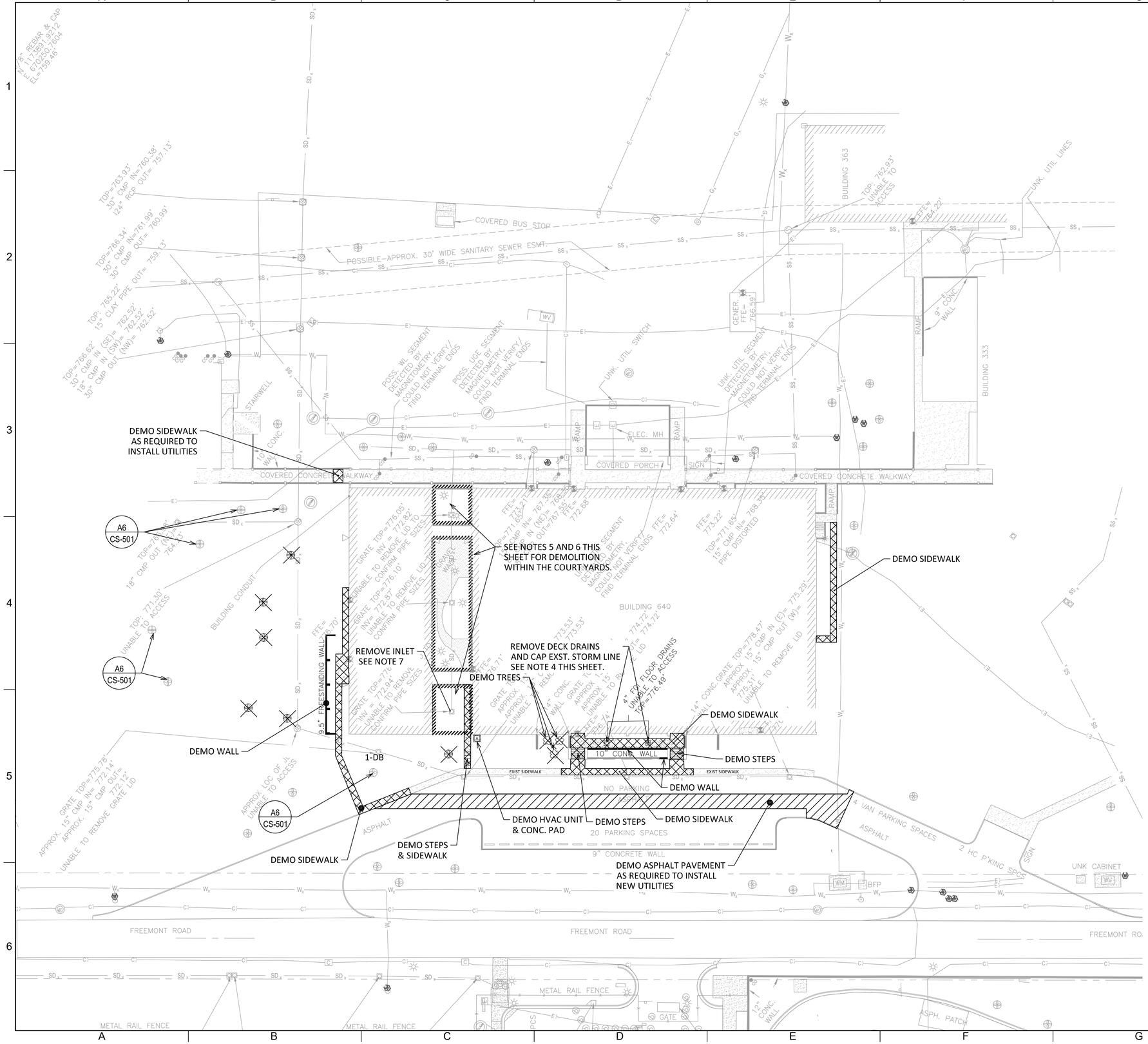

DEMOLITION NOTES:

1. SEE SHEET C-002 AND C-003 FOR ADDITIONAL UTILITY NOTES.

2. DEMO EXISTING UTILITIES AND CAP AT LIMITS INDICATED TO CONSTRUCT NEW WORK. CLOSE NEAREST VALVE AND REMOVE VALVE BOX ON ABANDONED WATER MAINS. FIELD VERIFY NEAREST VALVE ONLY SERVES SECTION OF WATER MAIN BEING ABANDONED.

3. SEE STRUCTURAL SHEETS FOR DEMOLITION OF RETAINING WALLS.

4. CAP FLOOR DRAIN PIPING FROM SIDEWALK THAT DRAINS NORTH UNDER BUILDING. EXISTING DRAINS DOWNSTREAM OF CAPS SHALL REMAIN OPERATIONAL. CONTRACTOR SHALL PREVENT CONCRETE, SOIL OR DEBRIS FROM ENTERING THE EXISTING STORM SYSTEM DURING CONSTRUCTION.

5. REMOVE ALL SITE FEATURES FROM WITHIN EXISTING COURTYARDS. STRIPE COURTYARDS OF TOP SOIL, GRAVEL AND OTHER SURFACES THAT DO NOT COMPLY WITH THE REQUIREMENTS OF SECTION 31 23 00.00 20 "EXCAVATION AND FILL".

6. REMOVE INLETS WITHIN COURTYARD AND RECONNECT REMAINING STORM PIPING WITH PIPING OF THE SAME DIAMETER. PROVIDE WATER TIGHT JOINTS FOR ALL PIPING. CONTRACTOR SHALL PREVENT CONCRETE, SOIL OR DEBRIS FROM ENTERING THE EXISTING STORM SYSTEM.

7. REMOVE STORM INLETS AND CAP EXISTING STORM LINE.

8. BACKFILL ALL VOIDS LEFT FROM DEMOLITION ACTIVITIES WITH COMPACTED STRUCTURAL FILL.

SITE DEMOLITION PLAN

SCALE: AS NOTED

PLAN NORTH

0 30' 60'

SCALE: 1 INCH = 30 FEET

US Army Corps of Engineers
Mobile District

Symbol	No.	Description	Date	Approved
		Revisions		

ALABAMA PROFESSIONAL LICENSED No. 12771 ENGINEER
OTIS R. ALLEN
06JUNE2021

Designed By: ORA
Drawn By: ORA
Checked By: DRG
Reviewed By:
Date: 06-29-2021
File No.
I.S.O. Sheet File Name:
Solicitation Number:

U.S. ARMY ENGINEER DISTRICT
CORPS OF ENGINEERS
MOBILE, ALABAMA

ss&a
CLARKNEXSEN

ARTC B640 RENOVATION
FEMA - DHS - CDP, ANNISTON, AL

SITE DEMOLITION PLAN

SHEET IDENTIFICATION
CD-101
SHEET 14 of 442

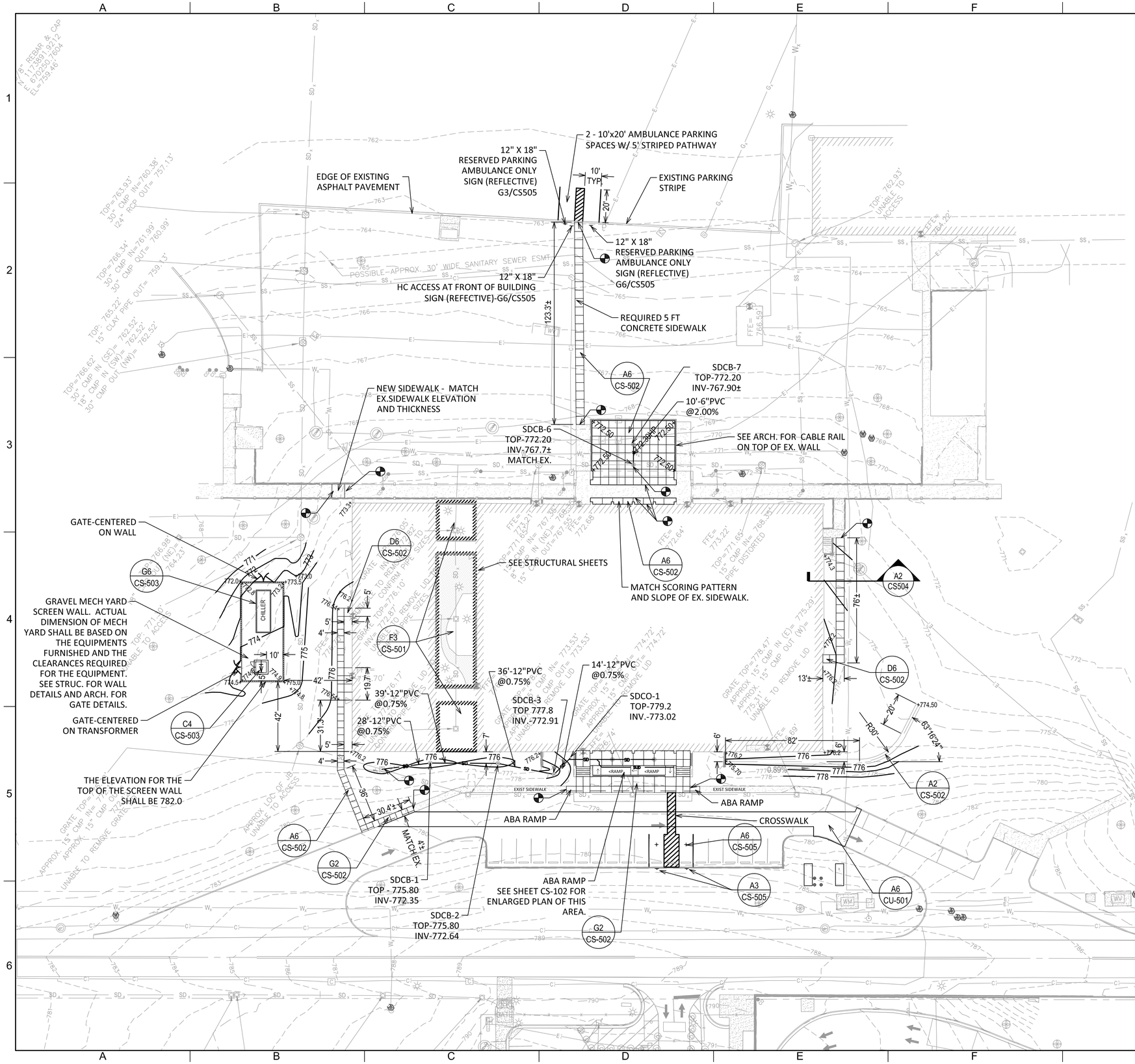

CIVIL NOTES:

1. CONTRACTOR SHALL FIELD VERIFY EXISTING CONDITIONS INCLUDING UTILITIES AND ADJUST PROPOSED IMPROVEMENTS AS NEEDED TO MEET DESIGN INTENT.

2. PROVIDE SIGNAGE AT EACH AMBULANCE PARKING SPACE.

3. CENTER STOOPS AT DOOR LOCATION, SEE ARCHITECTURAL.

4. UNLESS INDICATED OTHERWISE, DIMENSIONS AND COORDINATES INDICATED ON PLANS ARE IN FEET AND ARE TO OUTSIDE FACE OF BUILDING, BACK OF CURB, EDGE OF SIDEWALK, FACE OF WALL, EDGE OF PAVEMENT, EDGE OF PAD, OR CENTER LINE OF PIPE OR ALIGNMENT. COORDINATE BUILDING DIMENSIONS WITH ARCHITECTURAL AND STRUCTURAL SHEETS.

5. UNLESS INDICATED OTHERWISE, SCORE SIDEWALKS TRANSVERSELY AT SPACING EQUAL TO WIDTH. HALF INCH EXPANSION JOINTS SHALL BE SPACED AT MAXIMUM 40 FEET, AT POINTS WHERE SIDEWALK ABUTS OTHER STRUCTURES AND/OR AS INDICATED OTHERWISE ON PLANS.

6. UNLESS INDICATED OTHERWISE, ALL TRAFFIC SIGNS SHALL BE REFLECTIVE AND COMPLY WITH THE CURRENT U.S. FEDERAL HIGHWAY ADMINISTRATION'S "MANUAL ON UNIFORM TRAFFIC CONTROL DEVICES" (MUTCD).

7. ALL AREAS DISTURBED BY CONSTRUCTION MUST BE STABILIZED WITH SOLID SOD. SOLID SOD MUST MATCH EXISTING GRASS COVER.

8. SEE ELECTRICAL FOR SITE PLANS FOR POWER, LIGHTIING AND TELECOMMUNICATIONS.

9. SEE SHEETS C-002 AND C-003 FOR NOTES AND LEGENEDS.

SITE PLAN

SCALE: AS NOTED

PLAN NORTH

0 30' 60'

SCALE: 1 INCH = 30 FEET

US Army Corps of Engineers
Mobile District

Symbol	No.	Description	Date	Approved
		Revisions		

ALABAMA PROFESSIONAL ENGINEER LICENSED No. 12701 JARVIS R. ALLEN
06JUNE2021

Designed By: ORA
Drawn By: ORA
Checked By: DRG
Reviewed By:
Date: 06-29-2021
File No.:
I.S.O. Sheet File Name:
Solicitation Number:

U.S. ARMY ENGINEER DISTRICT CORPS OF ENGINEERS MOBILE, ALABAMA

ss&a CLARKNEXSEN

ARTC B640 RENOVATION
FEMA - DHS - CDP, ANNISTON, AL

SITE PLAN

SHEET IDENTIFICATION
CS-101
SHEET 15 of 442

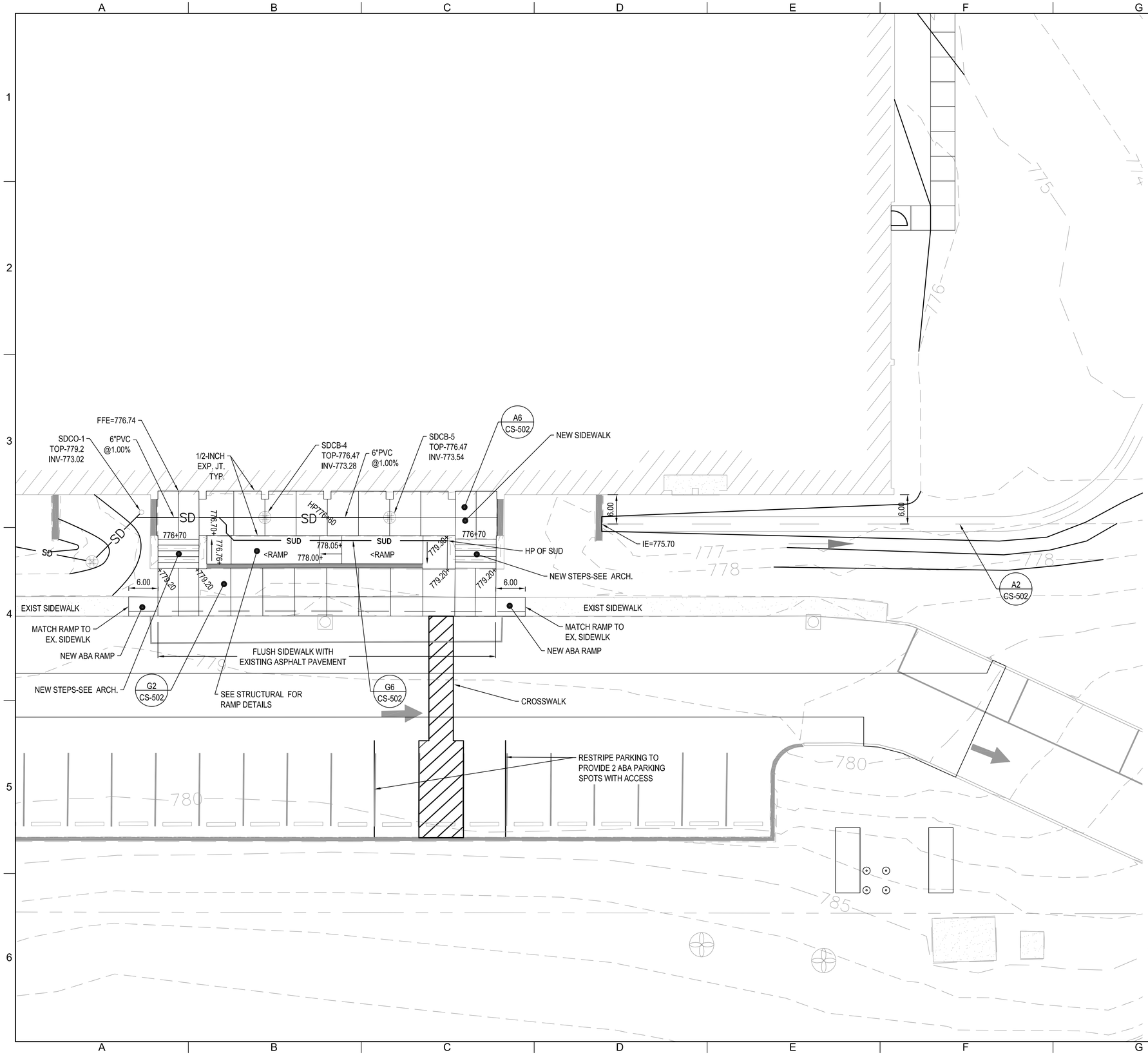

SITE PLAN OF MAIN ENTRANCE

SCALE: AS NOTED

PLAN NORTH

0 10' 20'

SCALE: 1 INCH = 10 FEET

US Army Corps of Engineers
Mobile District

Symbol	No.	Description	Date	Approved
		Revisions		

ALABAMA PROFESSIONAL ENGINEER LICENSED No. 12701
JAMES R. ALLEN
06JUNE2021

Designed By: ORA	Drawn By: ORA	Checked By: DRG	Reviewed By:
Date: 05-29-2021	File No.	I.S.O. Sheet File Name:	Solicitation Number:

U.S. ARMY ENGINEER DISTRICT
CORPS OF ENGINEERS
MOBILE, ALABAMA

ss&a
CLARKNEXSEN

ARTC B640 RENOVATION
FEMA - DHS - CDP, ANNISTON, AL

SITE PLAN OF MAIN ENTRANCE

SHEET IDENTIFICATION
CS-102
SHEET 16 of 442

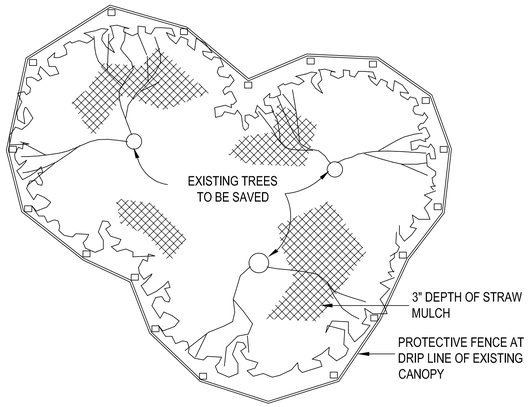

PLAN

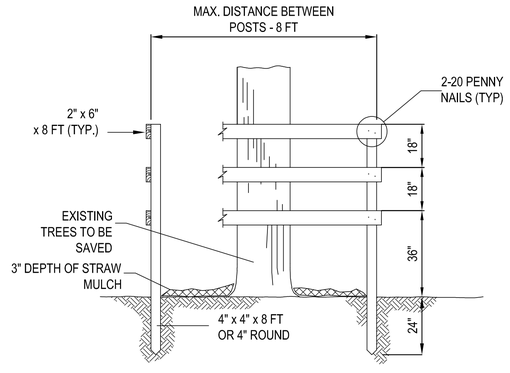

SECTION ELEVATION

TREE PROTECTION NOTES:

1. CLOSELY GROUPED TREES SHOULD BE ENCLOSED IN ONE LARGE PROTECTION FENCE.
2. REMOVE ALL EXISTING CONCRETE OR ASPHALT PAVING WITHIN THE LIMITS OF THE FENCED AREA.
3. IF REMOVAL CREATES A POTENTIAL WATER POCKET, IT SHALL BE FILLED TO PROVIDE POSITIVE DRAINAGE.
4. REMOVE ALL VINES FROM TREES IN FENCED AREA.
5. REMOVE DEAD OR DAMAGED LIMBS AND PAINT ALL WOUNDS WITH TREE WOUND PAINT. TREE PROTECTION FENCE SHALL BE PLACED ALONG THE CANOPY LINES OF EXISTING TREES.
6. PROTECT ALL TREES TO BE SAVED FROM EXCAVATION OF ALL UNDERGROUND UTILITIES.

A6 TREE PROTECTION DETAIL
NOT TO SCALE

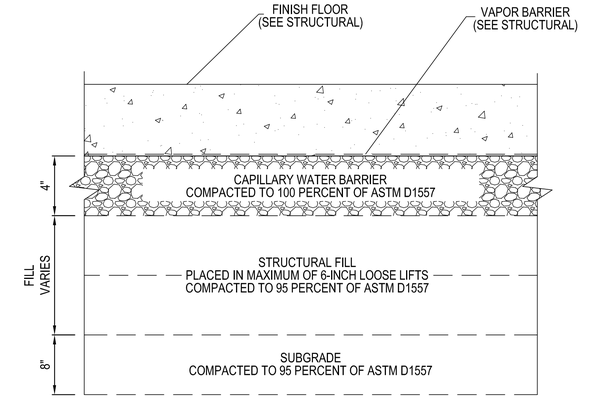

F3 TYPICAL BLDG. FINISH FLOOR SECTION
NOT TO SCALE CS SHEET SERIES

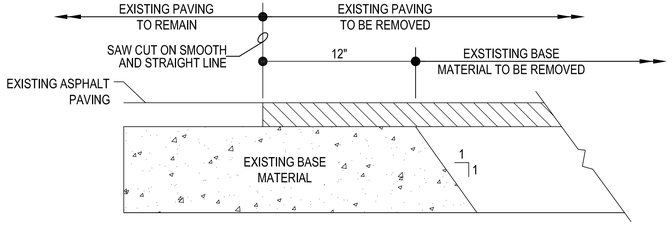

D6 PAVEMENT SAW CUT DETAIL
NOT TO SCALE

US Army Corps of Engineers
Mobile District

Symbol	No.	Description	Date	Approved
		Revisions		

ALABAMA PROFESSIONAL LICENSED No. 12701 ENGINEER
JARVIS R. ALLEN
06JUNE2021

Designed By: ORA
Drawn By: ORA
Checked By: DRG
Reviewed By:
Date: 06-29-2021
File No.
I.S.O. Sheet File Name:
Solicitation Number:

U.S. ARMY ENGINEER DISTRICT
CORPS OF ENGINEERS
MOBILE, ALABAMA

ss&a CLARKNEXSEN

ARTC B640 RENOVATION
FEMA - DHS - CDP, ANNISTON, AL

MISCELLANEOUS DETAILS

SHEET IDENTIFICATION
CS-501
SHEET 17 of 442

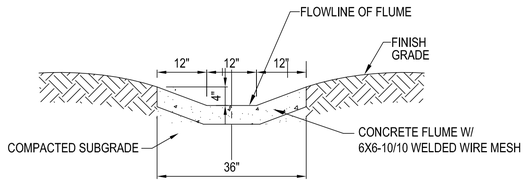

A2 TYPICAL SECTION - CONCRETE FLUME
NOT TO SCALE

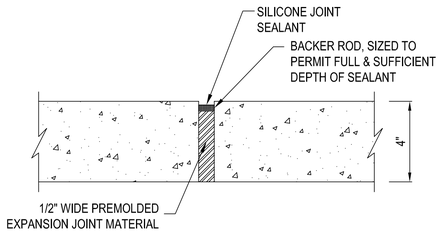

EXPANSION JOINT IN SIDEWALK DETAIL

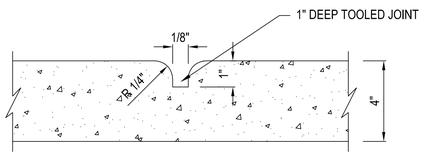

CONTRACTION JOINT IN SIDEWALK DETAIL

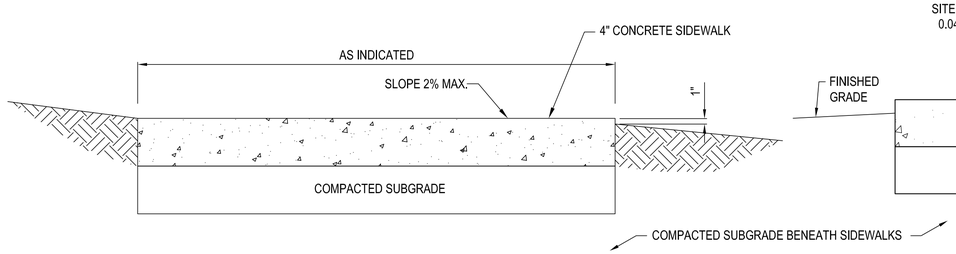

SECTION

A6 TYPICAL SIDEWALK DETAILS
NOT TO SCALE

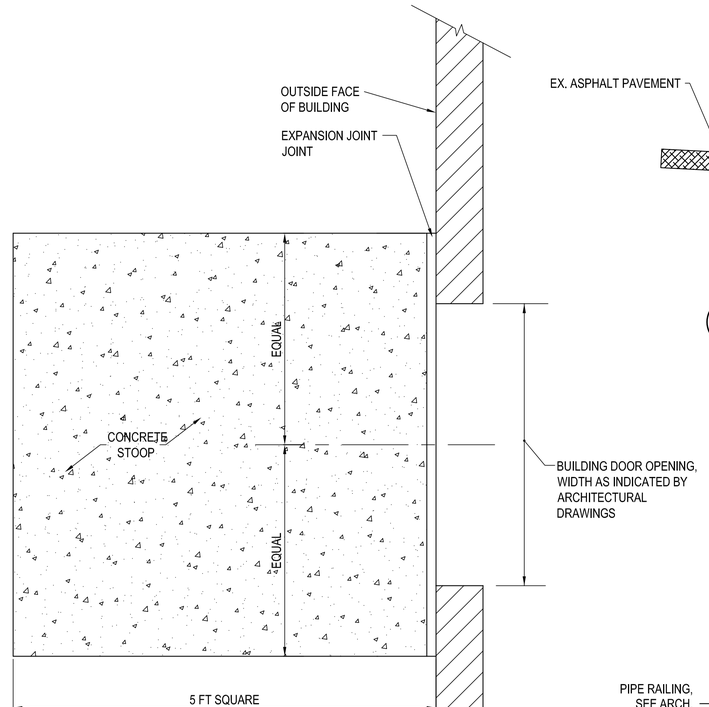

NOTE: CONCRETE SHALL HAVE SMOOTH FINISH

PLAN

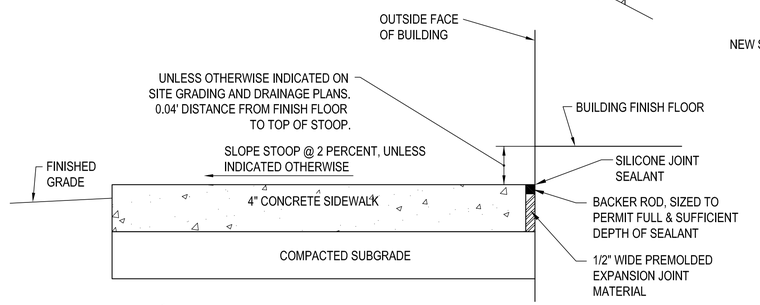

SECTION

D6 TYPICAL BUILDING CONCRETE STOOP
NOT TO SCALE

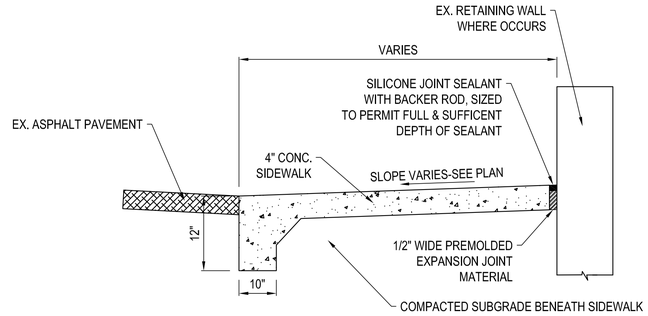

G2 SIDEWALK WITH THICKENED EDGE DETAIL
NOT TO SCALE

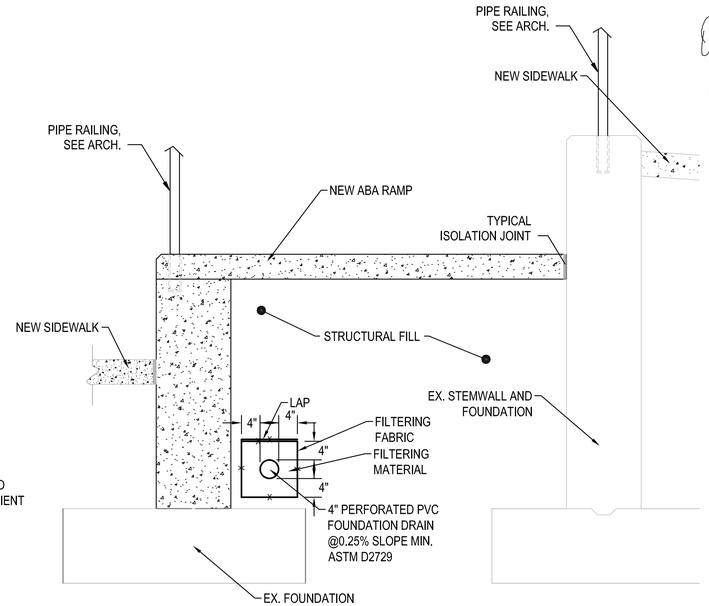

NOTE:
START SUBSURFACE FOUNDATION DRAIN AT INDICATED HIGH POINT (HP).

G6 SUBSURFACE FOUNDATION DRAIN (SUD)
NOT TO SCALE

US Army Corps of Engineers
Mobile District

Symbol	No.	Description	Date	Approved
		Revisions		

ALABAMA PROFESSIONAL ENGINEER LICENSED No. 12701 CHRIS R. ALLEN
06JUNE2021

Date: 06-29-2021
File No.
I.S.O. Sheet File Name:
Solicitation Number:
Designed By: ORA
Drawn By: ORA
Checked By: DRG
Reviewed By:

U.S. ARMY ENGINEER DISTRICT
CORPS OF ENGINEERS
MOBILE, ALABAMA

ss&a CLARKNEXSEN

ARTC B640 RENOVATION
FEMA - DHS - CDP, ANNISTON, AL

MISCELLANEOUS DETAILS

SHEET IDENTIFICATION
CS-502
SHEET 18 of 442

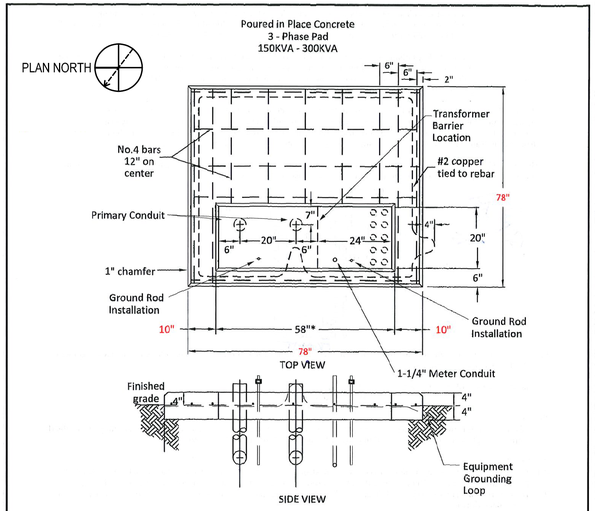

* 58" opening includes chamfer.

Disclaimer Notice - Please Read Carefully
The information contained in these specifications is the property of Southern Company Operating Companies. They do not cover all situations associated with distribution construction, nor do they include all the requirements associated with this construction. They are being provided as a reference for use during construction. Any other use is strictly prohibited. Disclosure of these specifications to any third party for any reason without the prior written consent of Alabama Power Company is strictly prohibited. By making these specifications available to an individual, Alabama Power Company and Southern Company do not assume any responsibility whatsoever for the individual's activities.

SUBJECT UNDERGROUND DISTRIBUTION

DETAIL EQUIPMENT AND PADS- POURED IN PLACE CONCRETE THREE PHASE PAD - 150KVA-300KVA

Date	SUPERSEDES DATE	SHEET		A-AUH16001
07-31-12	AUH16001 02-11-08	1 OF 4 SHEETS	ALABAMA POWER A SOUTHERN COMPANY	A

AUH-16.001

1.Customer's service entrance cable and conduits should be installed in the open window of the concrete pad in the shaded area shown. Conduits should be installed starting at the extreme right hand side of the window. Conduits should not be installed near the left hand dimension of the shaded customer conduit window unless absolutely necessary.

2.Grounding is to be provided by enhanced grounding consisting of 100 ft. of #2 copper 7 strand conductor installed in the bottom of the trench or 32 ft. stacked sections of ground rod installed in both the primary and secondary sides of the concrete pad window. The ground rod locations are not dimensioned to allow maximum flexibility in locating the ground rods, but the separation between ground rods should be as great as possible.

3. The transformer pad should NOT be located near: fire escapes, doors, windows, ventilation ducts, within 4 ft. of fire hydrants, or under building overhangs. If possible the pad should be installed on ground that slopes away from the building. There should be no above ground obstructions such as air conditioners, walls, shrubbery, trash bins, etc. in front of the transformer location. The transformer location must be accessible by large truck or crane.

4. There must be clear area around the transformer as detailed in the drawing below. The 10' X 10' area at the rear of the pad is necessary for the proper operation of the bayonet fuse of the transformer.

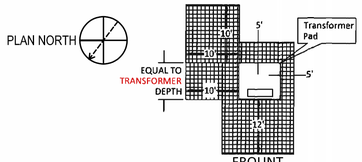

5. Precast concrete three phase transformer pads are available for customer purchase. Contact Supply Chain Management with the following information:

Maximo Number of precast pads: 41485.....76"x65"x8"
41486..... 90"x112"x8"

1.0 SCOPE

1.1 This specification covers the mechanical strength, dimensions and construction details of precast concrete pads for dead front, three phase pad-mounted distribution transformers, 45 kVA through 2500 kVA.

2.0 STRENGTH

2.1 The concrete shall develop a minimum compression strength of 3000 PSI within 28 days. Pads shall be placed in pad form within 1-1/2 hours after mixing and shall be cured a minimum of 72 hours prior to transformer installation.

2.2 The concrete shall be reinforced with No. 4 steel reinforcing bars installed on nominal 12" x 12" centers arranged as per attached drawing.

2.3 All reinforcing steel shall have a minimum of 1-1/2" clear cover.

2.4 All concrete shall be vibrated in forms to increase strength and prevent any voids or honeycomb in the finished pad.

2.5 Concrete must be kept moist for the first seven (7) days during curing and protected from temperatures below 50 °F.

Disclaimer Notice - Please Read Carefully
The information contained in these specifications is the property of Southern Company Operating Companies. They do not cover all situations associated with distribution construction, nor do they include all the requirements associated with this construction. They are being provided as a reference for use during construction. Any other use is strictly prohibited. Disclosure of these specifications to any third party for any reason without the prior written consent of Alabama Power Company is strictly prohibited. By making these specifications available to an individual, Alabama Power Company and Southern Company do not assume any responsibility whatsoever for the individual's activities.

SUBJECT UNDERGROUND DISTRIBUTION

DETAIL EQUIPMENT AND PADS - POURED IN PLACE CONCRETE 3 PHASE PAD
150 KVA - 2500 KVA

Date	SUPERSEDES DATE	SHEET		A-AUH16003
07-31-12	AUH-16.003 05-12-09	3 OF 4 SHEETS	ALABAMA POWER A SOUTHERN COMPANY	A

AUH-16.003

3.0 LIFTING EYES (FOR PRECAST PADS ONLY)

3.1 There shall be four lifting eyes for each pad. They shall be constructed of a minimum of #4 steel reinforcement bars for pads weighing less than 2000 pounds. For pads weighing 2000 pounds and more a minimum #6 steel reinforcing bar shall be used for the lifting eye. Other lifting methods of equal strength can be used with approval of the Alabama Power Company Distribution Engineering Services Department.

4.0 SURFACE FINISH

4.1 All surfaces shall be smooth finished and the top surface shall be flat. All top outside edges shall be beveled one inch with no sharp edges.

5.0 CABLE OPENING

5.1 The cable window openings are detailed in attached drawing. All edges shall be beveled and smooth with no concrete overflow into the cable opening.

6.0 COPPER GROUND BUS

6.1 A #2 Copper ground bus wire shall be cast in the concrete pad as detailed in attached drawing. The #2 Copper wire shall be tied or clamped to the reinforcing steel bar to assure a good electrical connection. A four inch (4") loop of the ground bus wire shall extend from the concrete pad into the cable window of the pad and from the right hand side of the pad for connection to the system ground. The #2 Copper wire shall be bare soft drawn solid or 7 strand.

7.0 MATERIAL STANDARDS

7.1 All reinforcing shall conform to ASTM A615; standard specifications for deformed billet bars, grade 60, latest revision.

8.0 MARKING (FOR PRECAST PADS ONLY)

8.1 Each pad shall be permanently marked so as to identify the manufacturer and date of manufacture of the pad. The markings shall be in one inch (1") letters (minimum) and shall be located at the right hand outside corner of the pad nearest to the cable window opening. The marking shall be approximately one (1") from the outer bevel edge.

8.2 A manufacturer may use an approved logo in the place of the above manufacturer name.

9.0 APPROVAL

9.1 Alabama Power Distribution Engineering Services shall be the final authority in the interpretation of this specification.

9.2 Alternatives to this specification, which will reduce cost, increase service life, reduce maintenance or simplify installation while maintaining quality, are encouraged and will be considered by Alabama Power Company.

9.3 Exceptions to this specification must be approved by Alabama Power Company Distribution Engineering Services prior to manufacturer of this product.

9.4 Concrete pads may be rejected for failure to conform to this specification. Pads may also be rejected for cracks in the concrete and surface areas that are not smooth and level.

Disclaimer Notice - Please Read Carefully
The information contained in these specifications is the property of Southern Company Operating Companies. They do not cover all situations associated with distribution construction, nor do they include all the requirements associated with this construction. They are being provided as a reference for use during construction. Any other use is strictly prohibited. Disclosure of these specifications to any third party for any reason without the prior written consent of Alabama Power Company is strictly prohibited. By making these specifications available to an individual, Alabama Power Company and Southern Company do not assume any responsibility whatsoever for the individual's activities.

SUBJECT UNDERGROUND DISTRIBUTION

DETAIL EQUIPMENT AND PADS - POURED IN PLACE CONCRETE 3 PHASE PAD
150 KVA - 2500 KVA

Date	SUPERSEDES DATE	SHEET		A-AUH16004
03-25-08		4 OF 4 SHEETS	ALABAMA POWER A SOUTHERN COMPANY	A

AUH-16.004

C4 TRANSFORMER PAD DETAILS AND SPECIFICATIONS

NOT TO SCALE

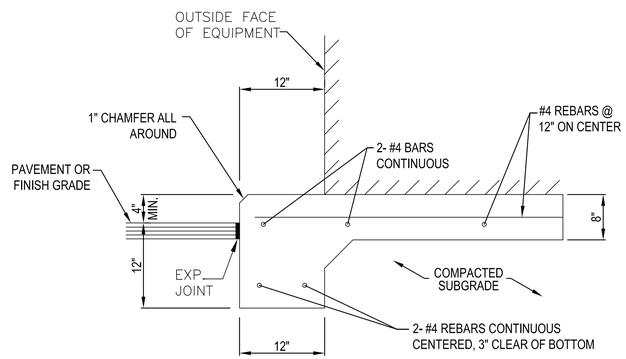

NOTE: EXACT SIZE OF EQUIPMENT PAD SHALL BE AS REQUIRED TO SUIT EQUIPMENT FURNISHED PLUS CLEARANCES.

G6 CONCRETE EQUIPMENT PAD DETAIL

NOT TO SCALE

US Army Corps of Engineers
Mobile District

Revisions

Symbol	No.	Description	Date	Approved

ALABAMA PROFESSIONAL ENGINEER LICENSED No. 12701 CHRIS R. ALLEN

06JUNE2021

Date: 06-29-2021
File No.
I.S.O. Sheet File Name:
Solicitation Number:

Designed By: ORA
Drawn By: ORA
Checked By: DRG
Reviewed By:

U.S. ARMY ENGINEER DISTRICT
CORPS OF ENGINEERS
MOBILE, ALABAMA

ss&a CLARKNEXSEN

ARTC B640 RENOVATION
FEMA - DHS - CDP, ANNISTON, AL

EQUIPMENT PAD DETAILS

SHEET IDENTIFICATION
CS-503
SHEET 19 of 442

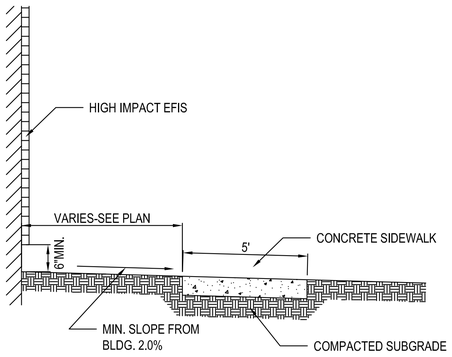

A2 TYPICAL SECTION
NOT TO SCALE

US Army Corps of Engineers
Mobile District

Symbol	No.	Description	Date	Approved
		Revisions		

ALABAMA PROFESSIONAL LICENSED No. 12701 ENGINEER
CHRIS R. ALLEN
06JUNE2021

Designed By: DRA	Date: 06-29-2021	I.S.O. Sheet File Name:	Solicitation Number:
Drawn By: DRA	File No.		
Checked By: DRB			
Reviewed By:			

U.S. ARMY ENGINEER DISTRICT
CORPS OF ENGINEERS
MOBILE, ALABAMA

ss&a
CLARKNEXSEN

ARTC B640 RENOVATION
FEMA - DHS - CDP, ANNISTON, AL

MISCELLANEOUS DETAILS

SHEET IDENTIFICATION
CS-504
SHEET 20 of 442

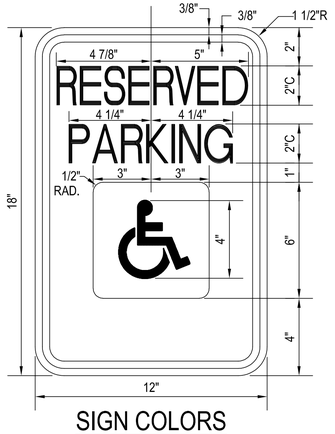

SIGN COLORS

LEGEND AND BORDER - GREEN (REFLECTIVE)
WHITE SYMBOL ON BLUE BACKGROUND (REFLECTIVE)
BACKGROUND - WHITE (REFLECTIVE)

A3 HANDICAPPED PARKING SIGN (R7-8)
NOT TO SCALE — CS SHEET SERIES

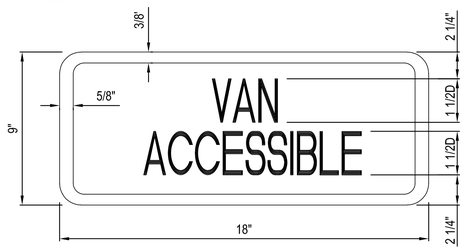

SIGN COLORS

BORDER: WHITE
BACKGROUND: BLUE

A4 VAN ACCESSIBLE SIGN (R7-8a)
NOT TO SCALE — CS SHEET SERIES

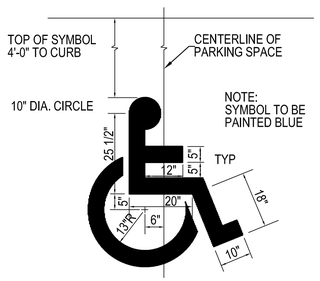

A6 INTERNATIONAL SYMBOL OF ACCESS
NOT TO SCALE — CS SHEET SERIES

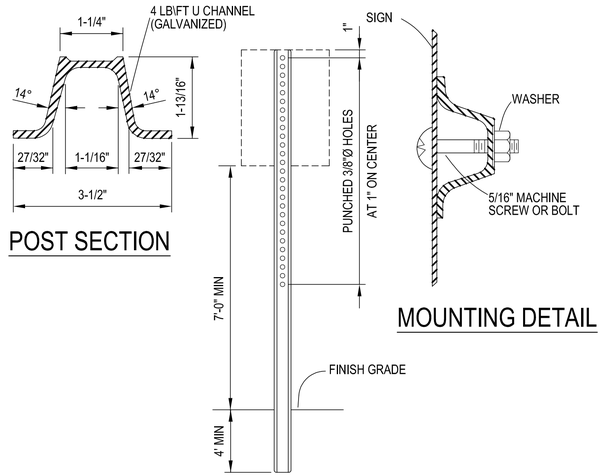

POST SECTION

MOUNTING DETAIL

D4 SIGN POST DETAIL
NOT TO SCALE — CS SHEET SERIES

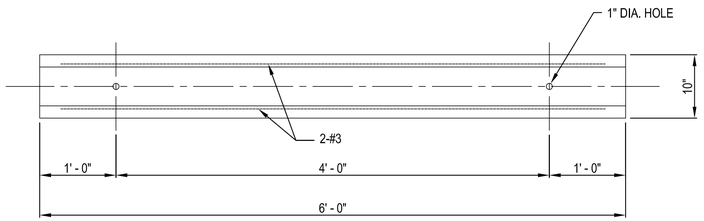

NOTE: CENTER BUMPER CURB IN EACH PARKING STALL AND 6" IN FROM EDGE OF PAVEMENT. BUMPER CURBS SHALL BE INSTALLED ONLY WHERE SHOWN ON PLANS.

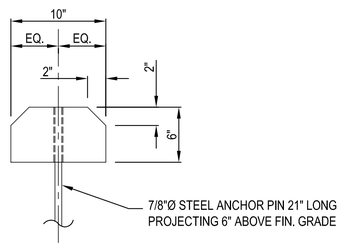

D6 BUMPER CURB DETAIL
NOT TO SCALE — CS SHEET SERIES



G3 RESERVED PARKING AMBULANCE ONLY SIGN
NOT TO SCALE — CS SHEET SERIES



G6 ACCES AT FRONT SIGN
NOT TO SCALE — CS SHEET SERIES

US Army Corps of Engineers
Mobile District

Symbol	No.	Description	Date	Approved
		Revisions		

ALABAMA PROFESSIONAL LICENSED No. 12701 ENGINEER
CHRIS R. ALLEN
06JUNE2021

Date: 06-29-2021
File No.
I.S.O. Sheet File Name:
Solicitation Number:

Designed By: BWA
Drawn By: BWA
Checked By: BWB
Reviewed By:

U.S. ARMY ENGINEER DISTRICT
CORPS OF ENGINEERS
MOBILE, ALABAMA

ss&a CLARKNEXSEN

ARTC B640 RENOVATION
FEMA - DHS - CDP, ANNISTON, AL

HANDICAPPED PARKING DETAILS

SHEET IDENTIFICATION
CS-505
SHEET 21 of 442

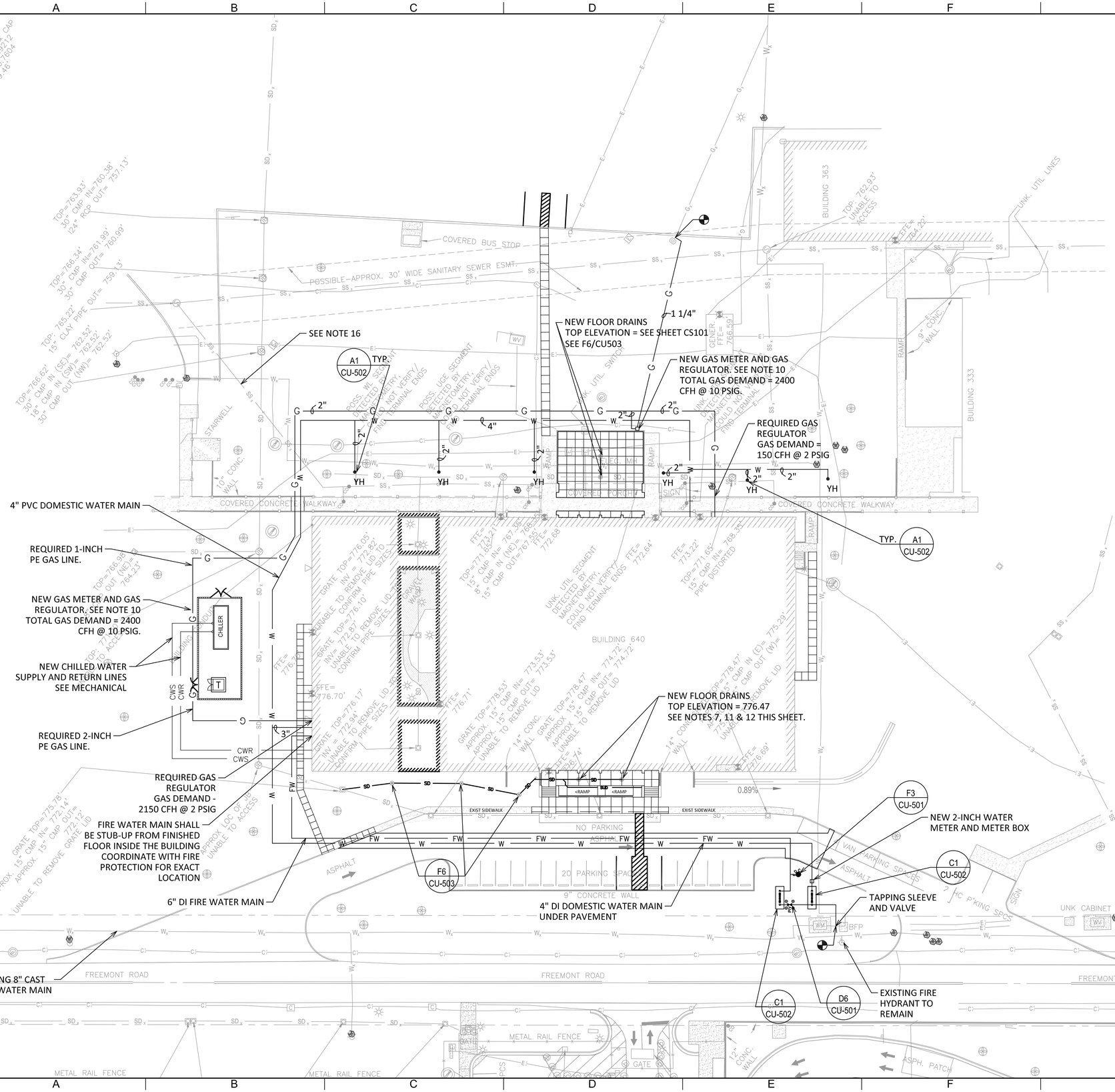

UTILITY NOTES:

1. SEE SHEET C-002 AND C-003 FOR ADDITIONAL UTILITY NOTES AND LEGENDS.

2. CAP EXISTING STORM LINES PRIOR TO COMMENCING DEMOLITION. PROTECT REMAIN STORM SYSTEM FROM THE INTRODUCTION OF DIRT AND DEBRIS.

3. SUD PIPES ARE 4 INCH PERFORATED PVC. SUD PIPES SHALL SLOPE 0.25% MINIMUM SLOPE TO OUTLET AS INDICATED. SUD SHALL BE INSTALLED IN A DRAINAGE LAYER OF ASTM NO. 57 STONE, SEE SPECIFICATIONS.

4. FIRE WATER BACKFLOW PREVENTION SHALL BE A 6-INCH REDUCED PRESSURE BACKFLOW PREVENTOR, LOCATED IN AN ENVIRONMENTAL COVER, SEE SPECIFICATIONS.

5. NEW FIRE WATER (FW) MAINS ARE PVC OR DUCTILE IRON AND SIZED AS NOTED. PVC PIPES SHALL CONFORM TO AWWA C900 AND BE A MINIMUM PRESSURE CLASS 200 (DR14). ALL JOINTS SHALL BE RESTRAINED, SEE SPECIFICATIONS.

6. ALL STORM PIPE (SD) SHALL BE 12-INCH, PVC SDR 35 WITH WATER TIGHT JOINTS SLOPED AT A 0.50 PERCENT MINIMUM SLOPE.

7. NEW FLOOR DRAINS SHALL BE J.R.SMITH, FIG. 2250 OR APPROVED EQUAL, WITH 6-INCH DISCHARGE, CAST IRON BODY, WITH SEDIMENT BUCKET. FLOOR DRAINS SHALL MEET ADA REQUIREMENTS.

8. SEE DETAIL F6 SHEET CU-503 FOR DRAINAGE BASIN (DB) DETAIL.

9. DOMESTIC REDUCED PRESSURE BACKFLOW PREVENTOR SHALL BE 4 INCHES LOCATED WITHIN A HEATED ENVIRONMENTAL COVER. SEE SPECIFICATIONS.

10. SPIRE ENERGY WILL SET THE GAS METER AND REGULATOR WITH SET FOR A DISCHARGE PRESSURE OF 10 PSIG. THE CONTRACTOR SHALL BE RESPONSIBLE FOR ALL COST ASSOCIATED WITH THIS WORK.

11. REMOVE FLOOR DRAIN PIPING FROM SIDEWALK THAT DRAINS NORTH UNDER BUILDING. CAP REMAIN STORM LINE THAT DRAINS UNDER BUILDING. PROTECT STORM LINES TO REMAIN FROM THE INTRODUCTION OF DIRT, CONCRETE OR DEBRIS.

12. PROVIDE NEW FLOOR DRAINS IN NEW CONCRETE AND ROUTE TO NEW EXTERIOR STORM PIPE SYSTEM. MINIMUM PIPE SIZE SHALL BE 6-INCH PVC @ 0.50 MINIMUM SLOPE

13. PROVIDE 4" PERFORATED SUBSURFACE DRAINAGE (SUD) PIPE BEHIND NEW RETAINING WALLS. SEE SHEET CS-102 FOR EXTENT OF SUD.

14. SEE PLUMBING, MECHANICAL, FIRE, AND ELECTRICAL SHEETS FOR EXACT LOCATION OF UTILITIES ENTERING THE BUILDINGS.

15. SEE ELECTRICAL FOR SITE PLANS FOR POWER, LIGHTIING AND TELECOMMUNICATIONS.

16. IF EXTERIOR SANITARY SEWER PIPING IS REQUIRED USE SCHEDULE 40 PVC PIPE WITH WATER TIGHT JOINTS.

SITE UTILITY PLAN

SCALE: AS NOTED

0 30' 60'

SCALE: 1 INCH = 30 FEET

US Army Corps of Engineers
Mobile District

Symbol	No.	Description	Date	Approved
		Revisions		

ALABAMA PROFESSIONAL ENGINEER LICENSED No. 12701 CHRIS R. ALLEN
06JUNE2021

Date:	06-29-2021
File No.	
I.S.O. Sheet File Name:	
Solicitation Number:	
Designed By:	ORA
Drawn By:	ORA
Checked By:	DRG
Reviewed By:	

U.S. ARMY ENGINEER DISTRICT
CORPS OF ENGINEERS
MOBILE, ALABAMA

ss&a CLARKNEXSEN

ARTC B640 RENOVATION
FEMA - DHS - CDP, ANNISTON, AL

SITE UTILITY PLAN

SHEET IDENTIFICATION
CU-101
SHEET 22 of 442

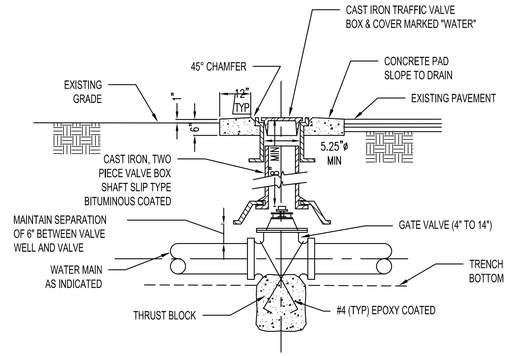

SECTION

NOTE:
1) PROVIDE VALVE EXTENSION IF TOP OF OPERATOR NUT IS > 4' BELOW FINISHED GRADE.
2) SECTION VALVES SHALL NOT BE LOCATED IN GUTTER AREAS.

D3 SECTION VALVE
NOT TO SCALE

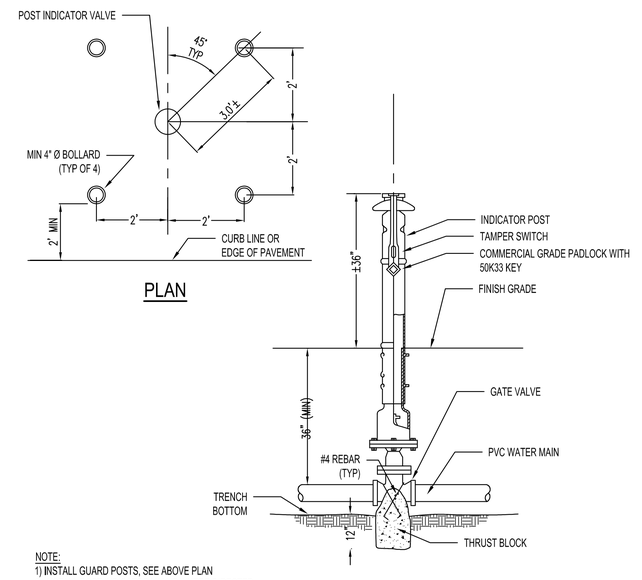

PLAN

SECTION

NOTE:
1) INSTALL GUARD POSTS, SEE ABOVE PLAN
2) INSTALL POST INDICATOR VALVE WHERE DIRECTED BY BASE PERSONNEL.

F3 POST INDICATOR VALVE
NOT TO SCALE

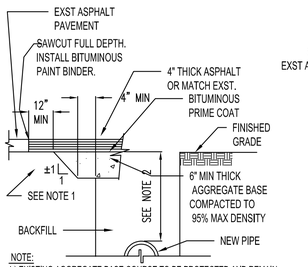

NOTE:
1.) EXISTING AGGREGATE BASE COURSE TO BE PROTECTED AND REMAIN UNDISTURBED TO PREVENT LOSS OF DENSITY AND SUPPORT UNDER EXISTING BITUMINOUS PAVEMENT.
2.) DEPTH = 36" MIN FOR PIPES LARGER THAN 2"Ø UNDER PAVEMENT.
DEPTH = 48" MIN FOR PIPES 2"Ø AND LARGER UNDER FINISH GRADE.
DEPTH = 24" MIN FOR PIPES 2"Ø AND SMALLER
3.) D = OUTSIDE DIAMETER OF PIPE.
4.) BACKFILL COMPACTION LIFT = 12"

TRENCH IN EXST PAVED AREA

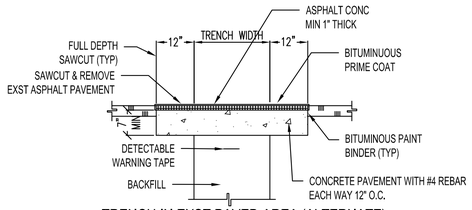

TRENCH IN EXST PAVED AREA (ALTERNATE)

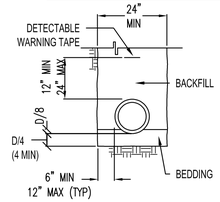

METALLIC PIPE

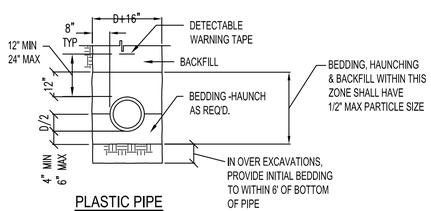

PLASTIC PIPE

A6 UTILITY TRENCH
NOT TO SCALE

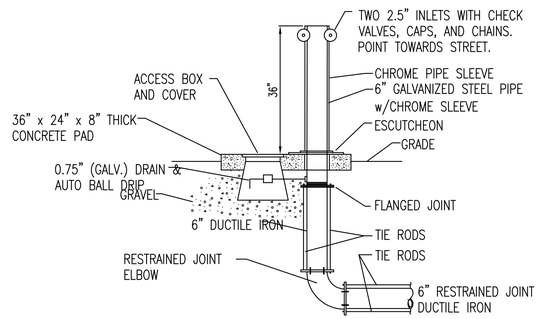

NOTES:
1. COAT TIE RODS, FLANGES AND BOLTS WITH 2 COATS OF COAL TAR AFTER ASSEMBLY.
2. PRIME PAINT ALL GALVANIZED PIPE AND SPIRAL WRAP WITH POLYKEN 826 PLASTIC TAPE.
3. PROVIDE BOLLARDS AS INDICATED ON DETAIL.

D6 REMOTE FIRE DEPARTMENT CONNECTION
NOT TO SCALE

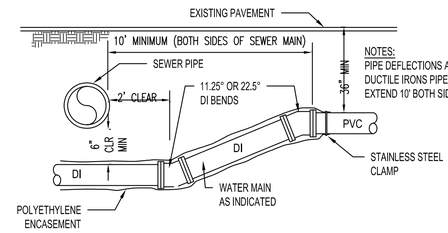

NOTES:
PIPE DEFLECTIONS AND COUPLING MAY BE USED IN LIEU OF BENDS. DUCTILE IRONS PIPE AND POLYETHYLENE ENCASEMENT SHALL EXTEND 10' BOTH SIDES OF SEWER.

F4 WATER PIPE SANITARY SEWER CROSSING - ELEVATION
NOT TO SCALE

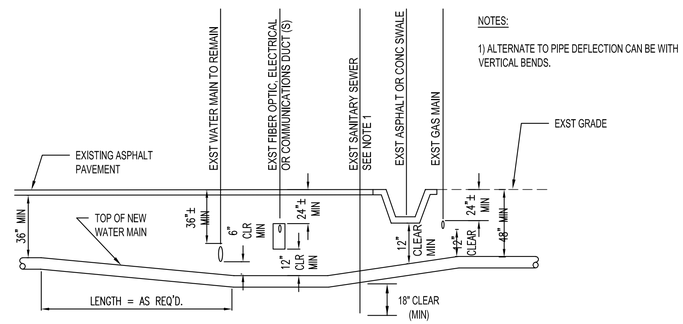

NOTES:
1) ALTERNATE TO PIPE DEFLECTION CAN BE WITH VERTICAL BENDS.

F6 TYPICAL WATER PIPE UTILITY CROSSING
NOT TO SCALE

US Army Corps of Engineers
Mobile District

Symbol	No.	Description	Date	Approved
		Revisions		

ALABAMA PROFESSIONAL ENGINEER LICENSED No. 12701 CHRIS R. ALLEN
06JUNE2021

Date: 06-29-2021
File No.
I.S.O. Sheet File Name:
Solicitation Number:
Designed By: ORA
Drawn By: ORA
Checked By: DRG
Reviewed By:

U.S. ARMY ENGINEER DISTRICT
CORPS OF ENGINEERS
MOBILE, ALABAMA

ss&a
CLARKNEXSEN

ARTC B640 RENOVATION
FEMA - DHS - CDP, ANNISTON, AL

MISCELLANEOUS UTILITY DETAILS

SHEET IDENTIFICATION
CU-501
SHEET 23 of 442

NOTES:
1) RPBA = REDUCED PRESSURE BACKFLOW PREVENTION ASSEMBLY.
2) RPBA SHALL HAVE A MIN 12" CLEARANCE ON ALL SIDES.
3) RPBA & PIPING SIZES TO MATCH WATER MAIN.
4) SEE PLAN FOR GUARD POST PROTECTION.
5) RPBA TO CONFORM TO AWWA C511.
6) RPBA ARE REQUIRED ON ALL NEW FACILITY DOMESTIC SERVICES AND IRRIGATION POINT OF CONNECTION.
7) RPBA ARE TO BE FULLY ENCLOSED IN A HEATED ENVIRONMENTAL COVER.

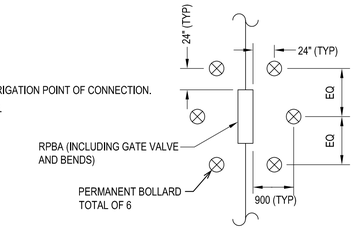

PLAN

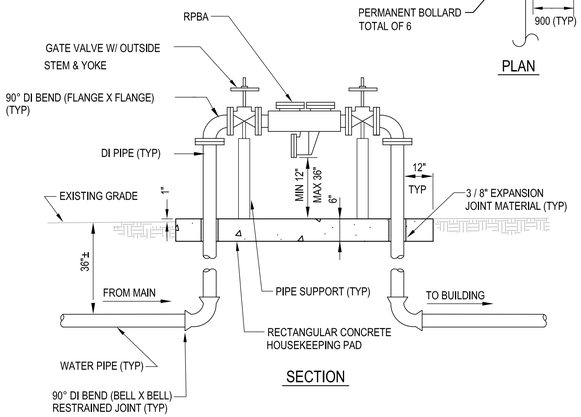

SECTION

C1 4" AND ABOVE REDUCED PRESSURE BACKFLOW ASSEMBLY
NOT TO SCALE

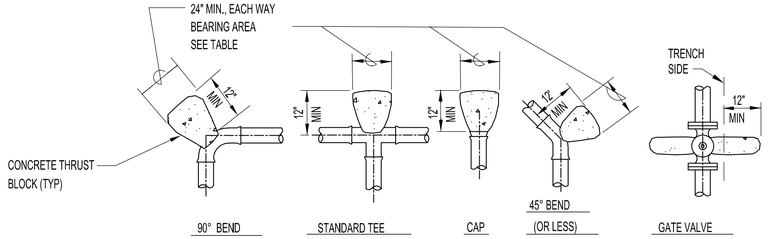

PIPE SIZE	FITTINGS					BEARING AREA (SQ. FEET)
	90°	45°	22 1/2°	11 1/4°	TEE,CAP&GV	
8"	14.1	8.0	4.0	2.0	10.1	
10"	22.0	12.6	6.3	3.1	15.7	
12"	31.7	18.1	9.0	4.5	22.6	

HORIZONTAL BEND THRUST BLOCK TABLE AND DETAILS

C3 CONCRETE THRUST BLOCK DETAIL
NOT TO SCALE

CONCRETE THRUST BLOCK NOTES:

1) MAX. ALLOWABLE SOIL PRESSURE (MASP)= 1,000 PSF

2) DESIGN OPERATING PRESSURE (DOP) = 120 PSI

3) DESIGN TEST PRESSURE (DTP) = SEE SPECIFICATIONS FOR TESTING REQUIREMENTS.

4) CONCRETE THRUST BLOCKS SHALL NOT INFRINGE ON VALVE OPERATORS, BOLTS, ETC.

5) ALL THRUST BLOCK BEARING AREAS SHALL BE CARRIED TO UNDISTURBED SOIL.

6) IF MASP, DOP, OR DTP DIFFERS THEN THRUST BLOCK BEARING AREAS AND VOLUMES MUST BE RE-CALCULATED.

7) THRUST BLOCKS SHALL BE USED AT CONNECTIONS BETWEEN EXISTING & NEW PIPE MAINS WHERE JOINTS ARE N RESTRAINED AND AT LOCATIONS WHERE EXISTING PIPE TO REMAIN IS BEING PLUGGED.

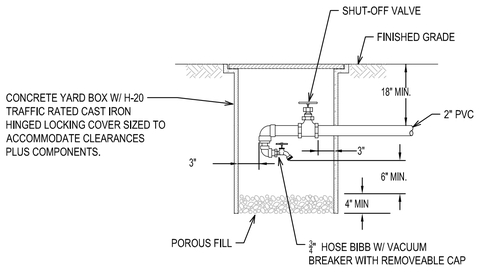

TYPICAL HOSE BIBB DETAIL (YH) A1
NOT TO SCALE

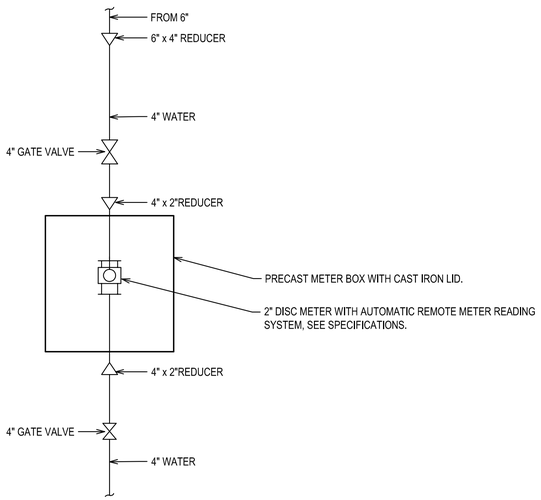

A1 DOMESTIC METER WATER DETAIL
NOT TO SCALE

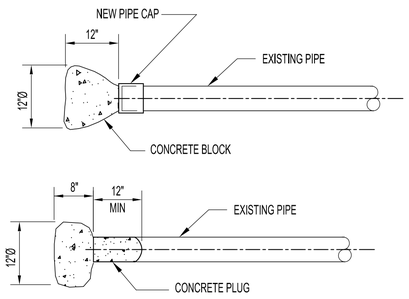

NOTE: WHERE PIPING IS INDICATED TO BE CAPPED, PLUGS ARE NOT ALLOWED.

C2 PLUG/CAP EXISTING PIPE
NOT TO SCALE

F6 PERMANENT BOLLARD DETAIL
NOT TO SCALE

US Army Corps of Engineers
Mobile District

Symbol	No.	Description	Date	Approved

Revisions

ALABAMA PROFESSIONAL ENGINEER LICENSED No. 12701 CHRIS R. ALLEN
06JUNE2021

Designed By: ORA	Drawn By: ORA	Checked By: DRG	Reviewed By:
Date: 06-29-2021	File No.	U.S.O. Sheet File Name:	Solicitation Number:

U.S. ARMY ENGINEER DISTRICT CORPS OF ENGINEERS MOBILE, ALABAMA

ss&a CLARKNEXSEN

ARTC B640 RENOVATION
FEMA - DHS - CDP, ANNISTON, AL

WATER DETAILS

SHEET IDENTIFICATION
CU-502
SHEET 24 of 442

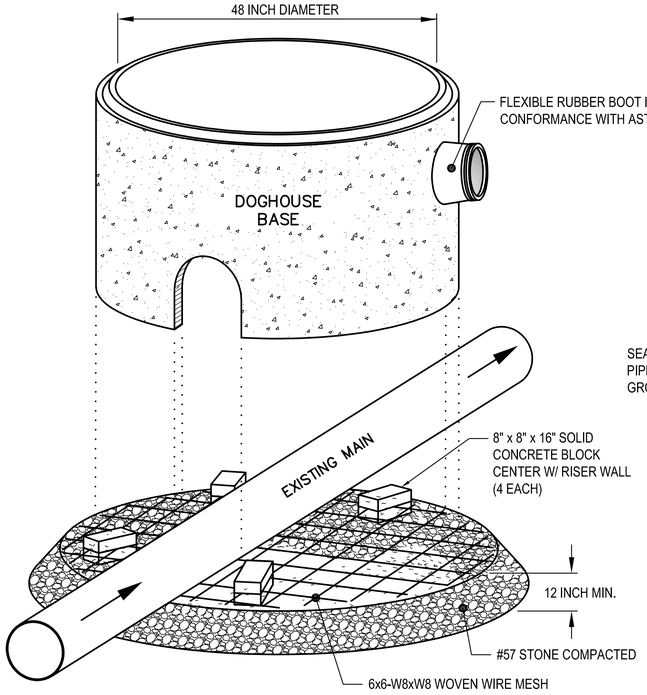

BASE UNIT INSTALLMENT

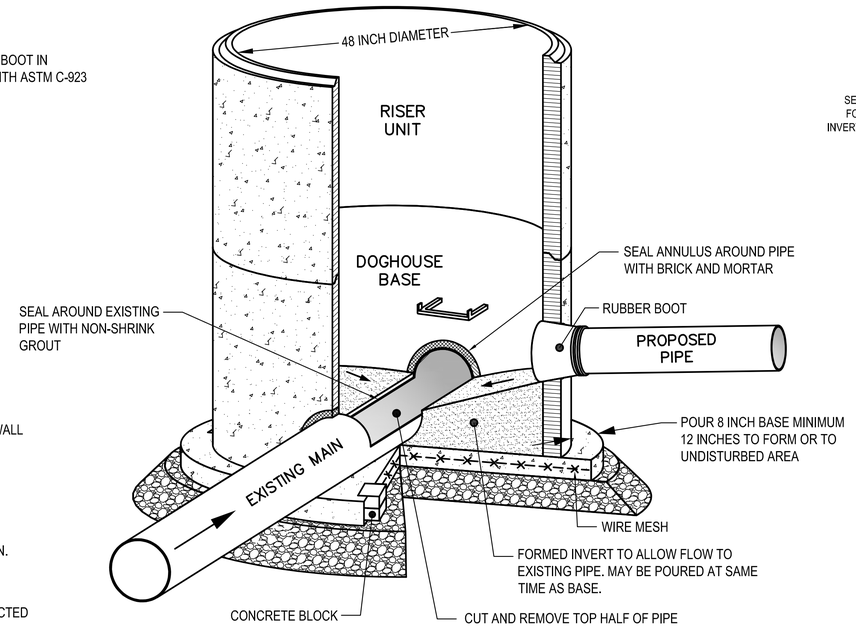

INVERT INSTALLMENT

NOTES:

1. DOGHOUSE OPENINGS IN PRECAST UNITS SHALL HAVE A RADIUS OF 4 TO 8 INCHES LARGER THAN THE EXISTING PIPE DIAMETER.
2. CAST-IN-PLACE CONCRETE SHALL BE 4000 PSI, PER ASTM C-94.
3. ALL PRECAST MANHOLE COMPONENTS SHALL MEET ASTM C-478.
4. BENCH SHALL SLOPE UPWARD FROM THE SPRINGLINE TO THE PROJECTED LEVEL OF THE PIPE CROWN OR 8 INCHES ABOVE THE SPRINGLINE, WHICHEVER IS LESS.

C4 DOGHOUSE TYPE MANHOLE DETAIL

NOT TO SCALE — CU SHEET SERIES

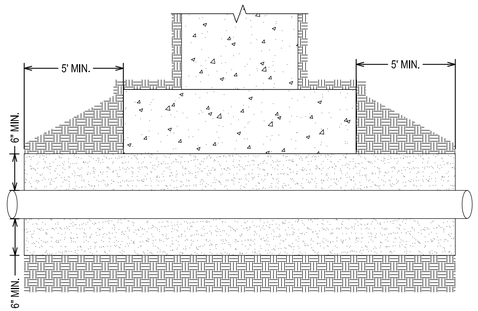

SECTION

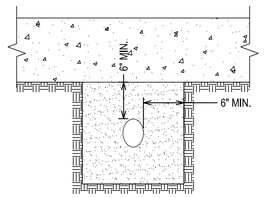

ELEVATION

B6 TYPICAL UTILITY BENEATH BLDG. FOOTING DETAILS

NOT TO SCALE — CU SHEET SERIES

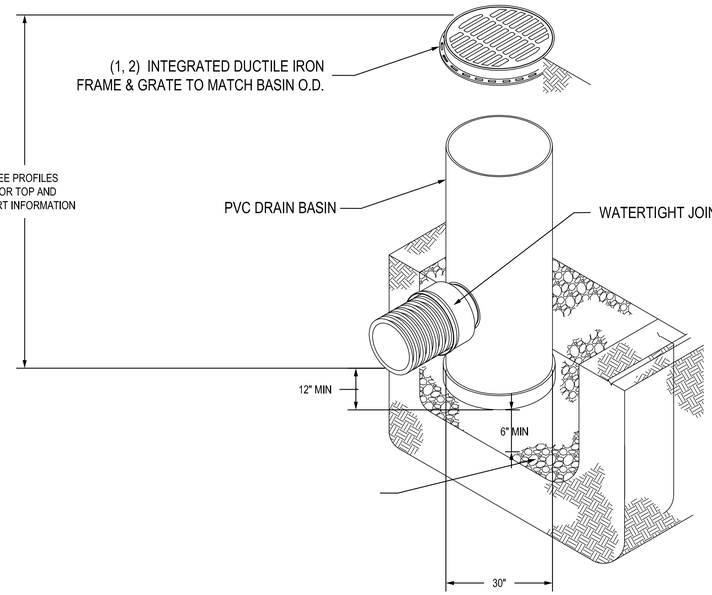

CB ELEVATION

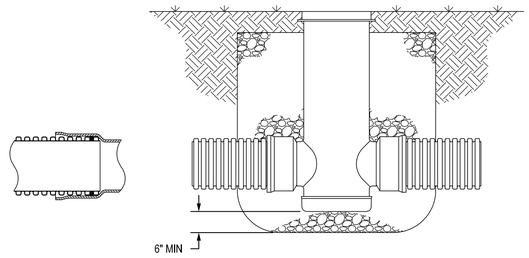

CB SECTION

1 - GRATES SHALL BE ROUND DUCTILE IRON PER ASTM A536 GRADE 70-50-05.

2 - FRAMES SHALL BE DUCTILE IRON PER ASTM A536 GRADE 70-50-05.

3 - DRAIN BASIN TO BE CUSTOM MANUFACTURED ACCORDING TO PLAN DETAILS.

4 - DRAINAGE CONNECTION STUB JOINT TIGHTNESS SHALL CONFORM TO ASTM D3212.

5 - GRATES SHALL MEET H-20 LOAD RATING.

CB NOTES

F6 CATCH BASIN (CB)

NOT TO SCALE

US Army Corps of Engineers
Mobile District

Symbol	No.	Description	Date	Approved
		Revisions		

ALABAMA PROFESSIONAL ENGINEER LICENSED No. 12701 DENNIS R. ALLEN
06JUNE2021

Designed By: ORA	Drawn By: ORA	Checked By: DRG	Reviewed By:
Date: 06-29-2021	File No.	I.S.O. Sheet File Name:	Solicitation Number:

U.S. ARMY ENGINEER DISTRICT
CORPS OF ENGINEERS
MOBILE, ALABAMA

ss&a CLARKNEXSEN

ARTC B640 RENOVATION
FEMA - DHS - CDP, ANNISTON, AL

MISCELLANEOUS UTILITY DETAILS

SHEET IDENTIFICATION
CU-503
SHEET 25 of 442

NOTES:
1. THE EROSION AND SEDIMENT CONTROL PLAN, AS PROVIDE, IS NOT COMPLETE FOR PERMITTING. THE CONTRACTOR SHALL BE RESPONSIBLE FOR OBTAINING PERMITS AND PROVIDE ALL DOCUMENTS REQUIRED FOR PERMIT SUBMITTAL.

2. SEE SHEET C-002 AND C-003 FOR ADDITIONAL SEDIMENT AND EROSION CONTROL NOTES AND LEGENDS.

EDGE OF EXISTING ASPHALT PAVEMENT

SEDIMENT FENCE

POSSIBLE APPROX. 30' WIDE SANITARY SEWER ESMT.

SEDIMENT FENCE

SEDIMENT FENCE

INLET PROTECTION TYPICAL

CHILLER

EXIST SIDEWALK

EXIST SIDEWALK

<RAMP

<RAMP

YH

SEDIMENT AND EROSION CONTROL PLAN

SCALE: AS NOTED

PLAN NORTH

0 30' 60'

SCALE: 1 INCH = 30 FEET

US Army Corps of Engineers
Mobile District

Symbol	No.	Description	Date	Approved
		Revisions		

ALABAMA PROFESSIONAL ENGINEER LICENSED No. 12701 DENNIS R. ALLEN

06JUNE2021

Designed By: ORA	Date: 06-29-2021
Drawn By: ORA	File No.
Checked By: DRG	I.S.O. Sheet File Name:
Reviewed By:	Solicitation Number:

U.S. ARMY ENGINEER DISTRICT CORPS OF ENGINEERS MOBILE, ALABAMA

ss&a CLARKNEXSEN

ARTC B640 RENOVATION
FEMA - DHS - CDP, ANNISTON, AL

SEDIMENT AND EROSION CONTROL PLAN

SHEET IDENTIFICATION

CE-101

SHEET 26 of 442