A NEW FIRE STATION NO. 1
located at
3170 Highway 77
for the
City of Southside, Alabama

Dana Snyder, Mayor

SCHEDULE OF DRAWINGS:

TITLE SHEET

CIVIL

C1.0 of 07 EXISTING SITE SURVEY
C2.0 of 07 SITE LAYOUT PLAN
C3.0 of 07 SITE GRADING PLAN
C4.0 of 07 STORMWATER HYDRAULICS & EROSION CONTROL PLAN
C5.0 of 07 SITE UTILITY PLAN
C6.0 of 07 MISC. DETAILS
C7.0 of 07 MISC. UTILITY DETAILS

ARCHITECTURAL

A2.0 of 17 LIFE SAFETY FLOOR PLAN
A2.1 of 17 FLOOR PLAN–ARCHITECTURAL NOTES
A2.2 of 17 FLOOR PLAN–DIMENSIONS
A2.3 of 17 REFLECTED CEILING PLAN
A3.0 of 17 DOOR AND WINDOW ELEVATIONS AND SCHEDULES
A3.1 of 17 DOOR AND WINDOW DETAILS–SHEET ONE
A3.2 of 17 DOOR AND WINDOW DETAILS–SHEET TWO
A4.0 of 17 ELEVATIONS
A5.0 of 17 ROOF PLAN, SECTIONS & DETAILS
A5.1 of 17 SECTIONS & DETAILS
A6.0 of 17 CROSS SECTIONS–SHEET ONE
A6.1 of 17 CROSS SECTIONS–SHEET TWO
A7.0 of 17 WALL SECTIONS–SHEET ONE
A7.1 of 17 WALL SECTIONS–SHEET TWO
A8.0 of 17 LARGE SCALE PARTIAL PLANS, ELEVATIONS & SCHEDULES
A8.1 of 17 INTERIOR ELEVATIONS
A8.2 of 17 LARGE SCALE STAIR PLANS and SECTIONS

STRUCTURAL

S1.0 of 07 GENERAL NOTES
S1.1 of 07 GENERAL NOTES
S1.2 of 07 TYPICAL DETAILS
S1.3 of 07 TYPICAL DETAILS
S2.1 of 07 FOUNDATION & FLOOR PLAN, MEZZANINE FRAMING PLAN
S2.2 of 07 ROOF FRAMING PLAN
S7.0 of 07 SECTIONS

PLUMBING

FP0.1 of 06 FIRE PROTECTION SCHEDULE AND NOTES
FP.1 of 06 FIRE PROTECTION FLOOR PLAN
P0.1 of 06 PLUMBING SCHEDULES AND NOTES
P0.2 of 06 PLUMBING RISERS
P1.0 of 06 NON–PRESSURE PIPING FLOOR PLAN
P2.0 of 06 PRESSURE PIPING FLOOR PLAN

MECHANICAL

M0.1 of 10 MECHANICAL LEGEND AND SCHEDULES
M0.2 of 10 MECHANICAL SCHEDULES AND CONTROLS
M0.3 of 10 MECHANICAL DETAILS
M0.4 of 10 MECHANICAL DETAILS
M0.5 of 10 MECHANICAL DETAILS
M0.6 of 10 MECHANICAL OSA CALCULATIONS
M0.7 of 10 MECHANICAL OSA CALCULATIONS
M1.0 of 10 MECHANICAL FLOOR PLAN
M1.1 of 10 MECHANICAL ATTIC PLAN
M2.0 of 10 MECHANICAL PIPING FLOOR PLAN

ELECTRICAL

E0.1 of 12 ELECTRICAL LEGEND
E0.2 of 12 ELECTRICAL SINGLE LINE DIAGRAM
E0.3 of 12 ELECTRICAL PANEL SCHEDULES
E0.4 of 12 ELECTRICAL DETAILS
E0.5 of 12 ELECTRICAL DETAILS
E0.6 of 12 ELECTRICAL DETAILS
E0.7 of 12 ELECTRICAL DETAILS
E1.0 of 12 FLOOR PLAN LIGHTING
E2.0 of 12 FLOOR PLAN POWER
E3.0 of 12 ELECTRICAL M&P CONNECTIONS FLOOR PLAN
E4.0 of 12 FLOOR PLAN AUXILIARY
E5.0 of 12 SITE PLAN ELECTRICAL

GENERAL NOTES (APPLICABLE TO ALL DWG'S)

1. This Contractor shall verify these Drawings with existing field dimensions & conditions that affect new work under this Contract. Do not scale Drawings. If dimensions are in question, obtain clarification from Architect prior to proceeding with the work. All dimensions relative to existing construction/conditions shall be considered approximate only(+/–). Minor discrepancies shall not relieve the Contractor from completing the work in accordance with the intent set forth. Upon discovery of existing conditions appreciably different from those shown or indicated, notify the Architect or Engineer immediately for further instructions.
2. Restore existing site improvements (shown to remain) where damaged by construction work, where new items are installed in or on a surface, and where existing items are removed.
3. Verify exact location of existing utility lines prior to commencing work.
4. See CIVIL, MECHANICAL & ELECTRICAL drawings for routing and/or connection of new or existing items relative to each trade.
5. Traffic: Conduct construction operations to ensure minimum interference with drives, walks, roads and adjacent occupied homes and other facilities.
6. Ensure safe passage of persons around area of construction. Conduct operations to prevent injury to persons, adjacent property and other improvements.
7. See Notes and Specifications for disposal of all rubbish and debris.

ARCHITECT:

ARCHITECT

THOMAS M. McELRATH, ARCHITECT

THOMAS M. McELRATH, ARCHITECT

717 MERIT SPRINGS ROAD
GADSDEN, ALABAMA 35901
PHONE: (256) 490–8244
EMAIL: tom@tmm–architect.com

CONSULTANTS:

CIVIL

SKIPPER ENGINEERING, INC.

SCOTT SKIPPER, P.E.

171 WOODLAND DRIVE
RAINBOW CITY, AL 35906
PHONE: (256) 390–9424
EMAIL: Scott@skipperengineering.com

STRUCTURAL

MBA ENGINEERS, INC.

KEITH OWENS, P.E.

300 20th NORTH, SUITE 100
BIRMINGHAM, AL 35203
PHONE: (205) 323–6385
FAX: (205) 324–0698

PLUMBING & MECHANICAL

DEWBERRY-EDMONDS

WADE STEWART, P.E.
SCOTT CARLISLE, P.E.

158 BUSINESS CENTER DRIVE
BIRMINGHAM, AL 35244
PHONE: (205) 988–2069
FAX: (205) 988–2065

ELECTRICAL

THE EE GROUP, INC.,

JAY MORGAN, P.E.

1521 RAINBOW DRIVE
GADSDEN, AL 35901
PHONE: (256) 413–7717
FAX: (256) 413–7789

STATE OF ALABAMA
THOMAS M. McELRATH
3072
GADSDEN, ALABAMA
REGISTERED ARCHITECT

THOMAS M. McELRATH, ARCHITECT
ARCHITECTURE and SPACE PLANNING
717 MERIT SPRINGS ROAD
GADSDEN, ALABAMA 35901
PHONE: (256) 490-8244
EMAIL: TOM@TMM-ARCHITECT.COM

A NEW FIRE STATION NO. 1
located at
3170 Highway 77
for the
City of Southside, Alabama

TITLE SHEET

DRAWN	TMM
CHECKED	TMM
SCALE	AS NOTED
DATE	NOVEMBER 15, 2021
FILE	18–04 TS.dwg
JOB NO.	21–01
REVISIONS	

SET
NUMBER

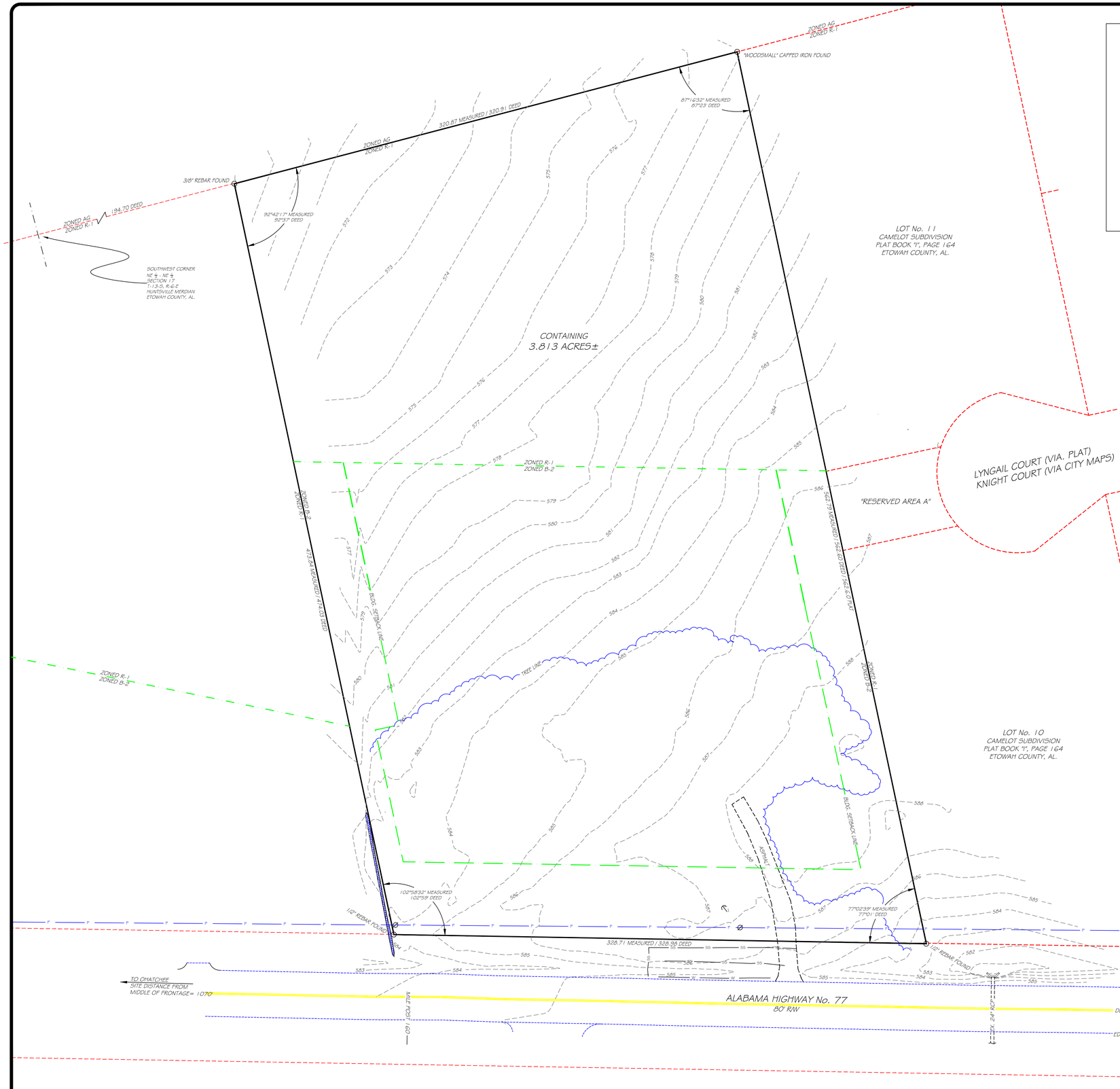

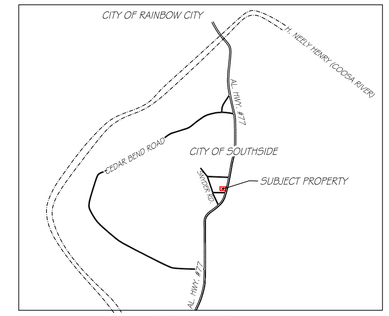

VICINITY MAP
-NTS-

PLAT

PROJECT #21009
SCALE 1"= 30'

STATE OF ALABAMA
COUNTY OF ETOWAH

I, Scott Skipper, a Registered Engineer and Land Surveyor of Alabama, hereby certify to the City of Southside, Alabama that all parts of this boundary & topographic survey and drawing of the following described property have been completed in accordance with the current requirements of the Standards of Practice for Surveying in the State of Alabama to the best of my knowledge, information, and belief:

Commence at the Southwest corner of the NE 1/4 of the NE 1/4, Section 17, T-17-S, R-6-E of the Huntsville Meridian, Etowah County, Alabama. From said point of commencement run North along the West line thereof a distance of 194.70 feet to 3/8" rebar found monumenting the point of beginning of the lands herein described. From said point of beginning continue along the previously described course a distance of 320.87 feet to a "Woodsmall" capped iron found monumenting the Southwest corner of Lot 11 of Camelot Subdivision as recorded in Plat Book "1", Page 164 in the Judge of Probate Office, Etowah County, Alabama; thence deflect 92° 43'28" right and run Easterly along the Southerly line of said Subdivision a distance of 562.79 feet to a 1/2" rebar found monumenting the Southeast corner of Lot 10 of said Subdivision, said point also being on the Westerly right-of-way line of Alabama Highway No. 77; thence deflect 102° 57'21" right and run Southwesterly along said right-of-way line a distance of 328.71 feet to a 1/2" rebar found; thence deflect 77° 01'28" right, depart from said right-of-way line and run Westerly a distance of 473.84 feet to the point of beginning.
Said parcel being a portion of the NE 1/4 of the NE 1/4, Section 17, T-17-S, R-6-E of the Huntsville Meridian, Etowah County, Alabama.
Said parcel being that same property as previously described in instrument Number 3503069 (dated 6/5/2020) in the Judge of Probate Office, Etowah County, Alabama.

According to my survey this the 29th day of March, 2021.

Scott Skipper

Scott Skipper
Registered Professional Land Surveyor
License Number 20141
Phone 256-390-9424

GENERAL NOTES:
1.) This survey was done without the benefit of a title search/opinion, and the surveyor makes no warranty that all easements, restrictions or encumbrances of record are shown.
2.) Zoned B-2, Rear Lot zoned R-1.

R-1 Allows "public utility" by special exception, subject to approval of the Board of Adjustment. Internet search of topic reveals fire stations may be considered as public utility as they exhibit similar characteristics w/ public utilities. provided no outside storage area and a buffer not less than 20' of any property line.

B-2 requirements & setbacks: 45' front, 15' side (30' when adjoining a residential zoning), rear 40', max. 65% impervious surfaces, not more than ½ of off-street parking spaces may be located w/in the front yard of the property.

AS REQUIRED BY ALABAMA LAW
CALL 2 WORKING DAYS
BEFORE EXCAVATION
811
ALABAMA LINE LOCATION CENTER, INC.

LEGEND

	IRON PIN FOUND
— P —	POWER OR OTHER AERIAL LINE
— SS —	SANITARY SEWER
— W —	WATER
Ø	POWER POLE
←	GUY WIRE

ALABAMA REGISTERED No. 20141 PROFESSIONAL ENGINEER & LAND SURVEYOR SCOTT SKIPPER

SURVEYING & CIVIL ENGINEERING BY:
SKIPPER ENGINEERING, INC.
171 WOODLAND DRIVE
RAINBOW CITY, AL. 35906
256-390-9424
scott@skipperengineering.com

ALDOT PERMIT SHEET 1 OF 3

STATE OF ALABAMA
THOMAS M. McELRATH
3072
GADSDEN, ALABAMA
REGISTERED ARCHITECT

THOMAS M. McELRATH, ARCHITECT
ARCHITECTURE and SPACE PLANNING
717 MERIT SPRINGS ROAD
GADSDEN, ALABAMA 35901
PHONE: (256) 490-8244
EMAIL: TOM@TMM-ARCHITECT.COM

A NEW FIRE STATION NO. 1
located at
3170 Highway 77
for the
City of Southside, Alabama

EXISTING SITE SURVEY

DRAWN	
CHECKED	
SCALE	1"= 30'
DATE	NOVEMBER 15, 2021
FILE	
JOB NO.	21-01
REVISIONS	

SHEET C-1 OF 07 SHEETS

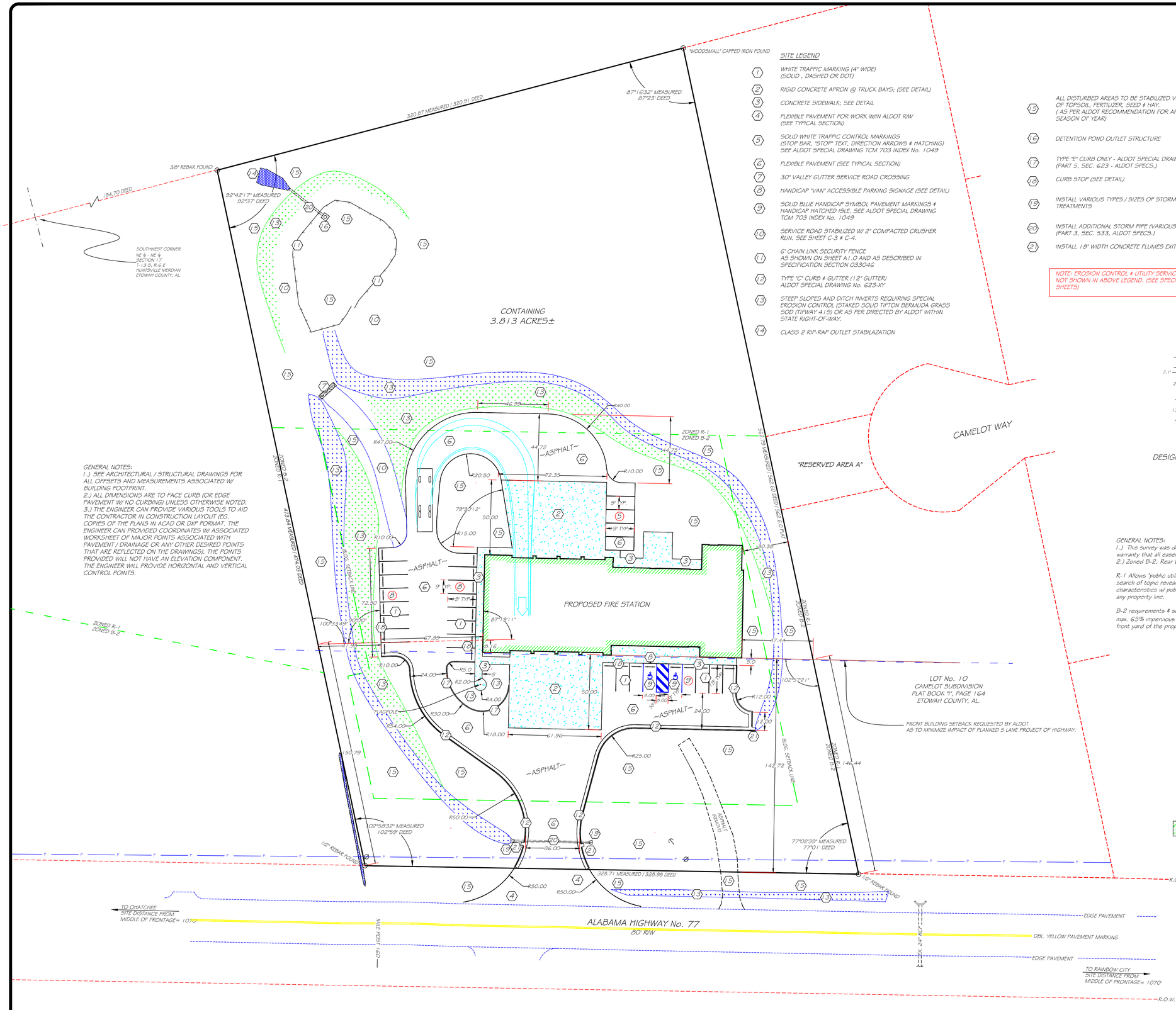

GENERAL NOTES:
1.) SEE ARCHITECTURAL / STRUCTURAL DRAWINGS FOR ALL OFFSETS AND MEASUREMENTS ASSOCIATED W/ BUILDING FOOTPRINT.
2.) ALL DIMENSIONS ARE TO FACE CURB (OR EDGE PAVEMENT W/ NO CURBING) UNLESS OTHERWISE NOTED.
3.) THE ENGINEER CAN PROVIDE VARIOUS TOOLS TO AID THE CONTRACTOR IN CONSTRUCTION LAYOUT (EG. COPIES OF THE PLANS IN ACAD OR DXF FORMAT. THE ENGINEER CAN PROVIDED COORDINATES W/ ASSOCIATED WORKSHEET OF MAJOR POINTS ASSOCIATED WITH PAVEMENT / DRAINAGE OR ANY OTHER DESIRED POINTS THAT ARE REFLECTED ON THE DRAWINGS). THE POINTS PROVIDED WILL NOT HAVE AN ELEVATION COMPONENT. THE ENGINEER WILL PROVIDE HORIZONTAL AND VERTICAL CONTROL POINTS.

SITE LEGEND

1. WHITE TRAFFIC MARKING (4" WIDE) (SOLID , DASHED OR DOT)
2. RIGID CONCRETE APRON @ TRUCK BAYS; (SEE DETAIL)
3. CONCRETE SIDEWALK; SEE DETAIL
4. FLEXIBLE PAVEMENT FOR WORK W/IN ALDOT R/W (SEE TYPICAL SECTION)
5. SOLID WHITE TRAFFIC CONTROL MARKINGS (STOP BAR, "STOP" TEXT, DIRECTION ARROWS & HATCHING) SEE ALDOT SPECIAL DRAWING TCM 703 INDEX No. 1049
6. FLEXIBLE PAVEMENT (SEE TYPICAL SECTION)
7. 30" VALLEY GUTTER SERVICE ROAD CROSSING
8. HANDICAP "VAN" ACCESSIBLE PARKING SIGNAGE (SEE DETAIL)
9. SOLID BLUE HANDICAP SYMBOL PAVEMENT MARKINGS & HANDICAP HATCHED ISLE. SEE ALDOT SPECIAL DRAWING TCM 703 INDEX No. 1049
10. SERVICE ROAD STABILIZED W/ 2" COMPACTED CRUSHER RUN. SEE SHEET C-3 & C-4.
11. 6' CHAIN LINK SECURITY FENCE AS SHOWN ON SHEET A1.0 AND AS DESCRIBED IN SPECIFICATION SECTION 033046
12. TYPE "C" CURB & GUTTER (12" GUTTER) ALDOT SPECIAL DRAWING No. 623-XY
13. STEEP SLOPES AND DITCH INVERTS REQUIRING SPECIAL EROSION CONTROL (STAKED SOLID TIFTON BERMUDA GRASS SOD (TIFWAY 419) OR AS PER DIRECTED BY ALDOT WITHIN STATE RIGHT-OF-WAY.
14. CLASS 2 RIP-RAP OUTLET STABILAZATION
15. ALL DISTURBED AREAS TO BE STABILIZED VIA. APPLICATION OF TOPSOIL, FERTILIZER, SEED & HAY. (AS PER ALDOT RECOMMENDATION FOR APPROPRIATE SEASON OF YEAR)
16. DETENTION POND OUTLET STRUCTURE
17. TYPE "E" CURB ONLY - ALDOT SPECIAL DRAWING No. 623-XY (PART 5, SEC. 623 - ALDOT SPECS.)
18. CURB STOP (SEE DETAIL)
19. INSTALL VARIOUS TYPES / SIZES OF STORM PIPING END TREATMENTS
20. INSTALL ADDITIONAL STORM PIPE (VARIOUS SIZE & TYPE) (PART 3, SEC. 533, ALDOT SPECS.)
21. INSTALL 18" WIDTH CONCRETE FLUMES EXITING CURBING

NOTE- EROSION CONTROL & UTILITY SERVICE ITEMS ARE NOT SHOWN IN ABOVE LEGEND. (SEE SPECIFIC CIVIL SHEETS)

PROJECT #21009
SCALE 1"= 30'

GENERAL NOTES:
1.) This survey was done without the benefit of a title search/opinion, and the surveyor makes no warranty that all easements, restrictions or encumbrances of record are shown.
2.) Zoned B-2, Rear Lot zoned R-1.

R-1 Allows "public utility" by special exception, subject to approval of the Board of Adjustment. Internet search of topic reveals fire stations may be considered as public utility as they exhibit similar characteristics w/ public utilities. provided no outside storage area and a buffer not less than 20' of any property line.

B-2 requirements & setbacks: 45' front, 15' side (30' when adjoining a residential zoning), rear 40', max. 65% impervious surfaces, not more than ⅓ of off-street parking spaces may be located w/in the front yard of the property.

STATE OF ALABAMA
THOMAS M. McELRATH
3072
GADSDEN, ALABAMA
REGISTERED ARCHITECT

THOMAS M. McELRATH, ARCHITECT
ARCHITECTURE and SPACE PLANNING
717 MERIT SPRINGS ROAD
GADSDEN, ALABAMA 35901
PHONE: (256) 490-8244
EMAIL: TOM@TMM-ARCHITECT.COM

A NEW FIRE STATION NO. 1
located at
3170 Highway 77
for the
City of Southside, Alabama

SITE LAYOUT PLAN

DRAWN	
CHECKED	
SCALE	1"= 30'
DATE	NOVEMBER 15, 2021
FILE	
JOB NO.	21-01
REVISIONS	

SHEET C-2 OF 07 SHEETS

ALABAMA REGISTERED No. 20141 PROFESSIONAL ENGINEER & LAND SURVEYOR SCOTT SKIPPER

SURVEYING & CIVIL ENGINEERING BY:
SKIPPER ENGINEERING, INC.
171 WOODLAND DRIVE
RAINBOW CITY, AL. 35906
256-390-9424
scott@skipperengineering.com

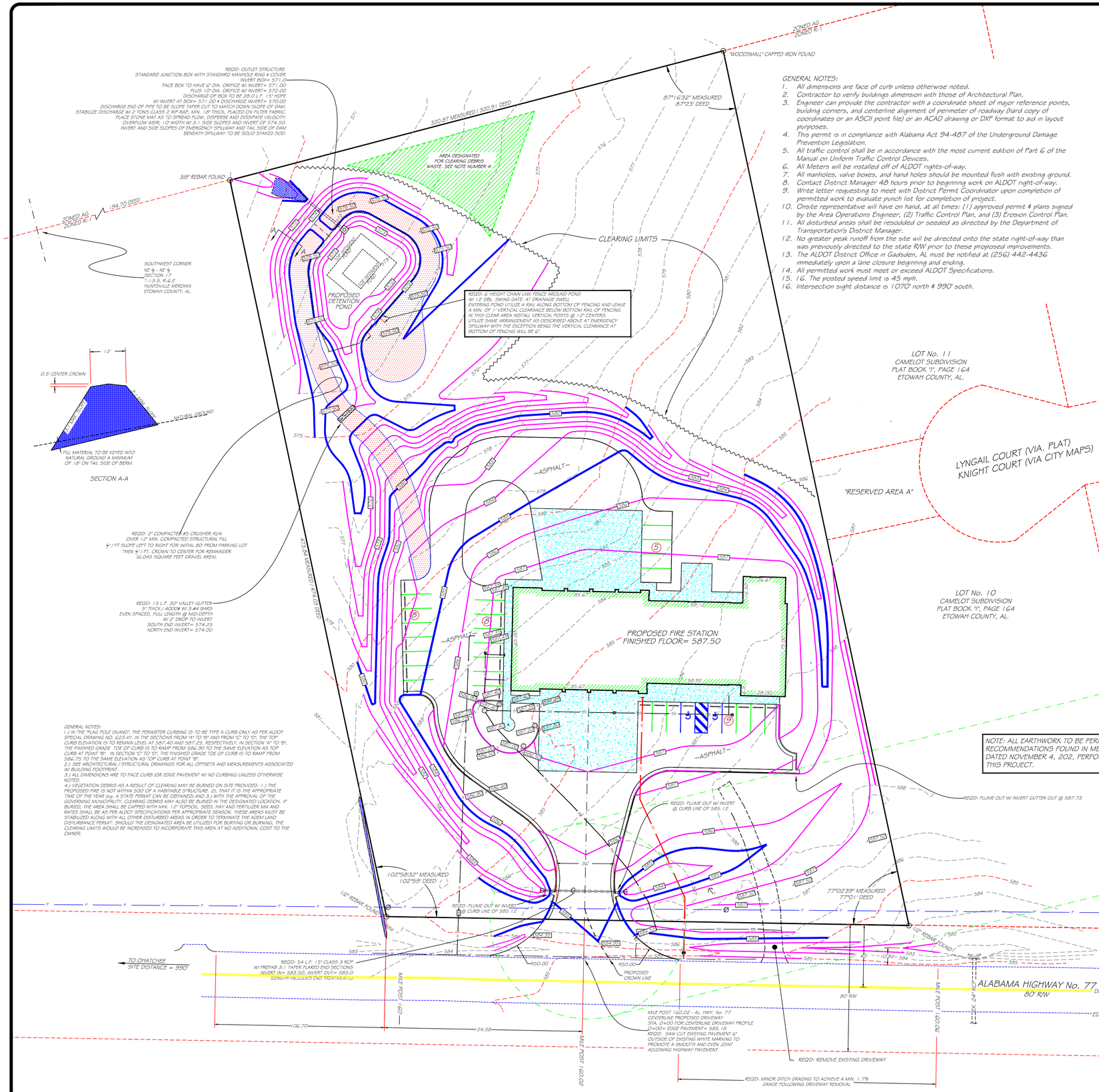

GENERAL NOTES:

1. All dimensions are face of curb unless otherwise noted.
2. Contractor to verify buildings dimension with those of Architectural Plan.
3. Engineer can provide the contractor with a coordinate sheet of major reference points, building corners, and centerline alignment of perimeter of roadway (hard copy of coordinates or an ASCII point file) or an ACAD drawing or DXF format to aid in layout purposes.
4. This permit is in compliance with Alabama Act 94-487 of the Underground Damage Prevention Legislation.
5. All traffic control shall be in accordance with the most current edition of Part 6 of the Manual on Uniform Traffic Control Devices.
6. All Meters will be installed off of ALDOT rights-of-way.
7. All manholes, valve boxes, and hand holes should be mounted flush with existing ground.
8. Contact Distrnct Manager 48 hours prior to beginning work on ALDOT right-of-way.
9. Write letter requesting to meet with Distrnct Permit Coordinator upon completion of permitted work to evaluate punch list for completion of project.
10. Onsite representative will have on hand, at all times: (1) approved permit & plans signed by the Area Operations Engineer, (2) Traffic Control Plan, and (3) Erosion Control Plan.
11. All disturbed areas shall be resodded or seeded as directed by the Department of Transportation's Distrnct Manager.
12. No greater peak runoff from the site will be directed onto the state right-of-way than was previously directed to the state R/W prior to these proposed improvements.
13. The ALDOT Distrnct Office in Gadsden, AL must be notified at (256) 442-4436 immediately upon a lane closure beginning and ending.
14. All permitted work must meet or exceed ALDOT Specifications.
15. 16. The posted speed limit is 45 mph.
16. Intersection sight distance is 1070' north & 990' south.

GENERAL NOTES:
1.) IN THE "FLAG POLE ISLAND", THE PERIMETER CURBING IS TO BE TYPE A CURB ONLY AS PER ALDOT SPECIAL DRAWING NO. 623-XY. IN THE SECTIONS FROM "A" TO "B" AND FROM "C" TO "D", THE TOP CURB ELEVATION IS TO REMAIN LEVEL AT 587.40 AND 587.25, RESPECTIVELY. IN SECTION "A" TO "B", THE FINISHED GRADE TOE OF CURB IS TO RAMP FROM 586.90 TO THE SAME ELEVATION AS TOP CURB AT POINT "B". IN SECTION "C" TO "D", THE FINISHED GRADE TOE OF CURB IS TO RAMP FROM 586.75 TO THE SAME ELEVATION AS TOP CURB AT POINT "B".
2.) SEE ARCHITECTURAL / STRUCTURAL DRAWINGS FOR ALL OFFSETS AND MEASUREMENTS ASSOCIATED W/ BUILDING FOOTPRINT.
3.) ALL DIMENSIONS ARE TO FACE CURB (OR EDGE PAVEMENT W/ NO CURBING) UNLESS OTHERWISE NOTED.
4.) VEGETATION DEBRIS AS A RESULT OF CLEARING MAY BE BURNED ON SITE PROVIDED: 1.) THE PROPOSED FIRE IS NOT WITHIN 500' OF A HABITABLE STRUCTURE. 2). THAT IT IS THE APPROPRIATE TIME OF THE YEAR (eg. A STATE PERMIT CAN BE OBTAINED) AND 3.) WITH THE APPROVAL OF THE GOVERNING MUNICIPALITY. CLEARING DEBRIS MAY ALSO BE BURIED IN THE DESIGNATED LOCATION. IF BURIED, THE AREA SHALL BE CAPPED WITH MIN. 12" TOPSOIL, SEED, HAY AND FERTILIZER MIX AND RATES SHALL BE AS PER ALDOT SPECIFICATIONS PER APPROPRIATE SEASON. THESE AREAS MUST BE STABILIZED ALONG WITH ALL OTHER DISTURBED AREAS IN ORDER TO TERMINATE THE ADEM LAND DISTURBANCE PERMIT. SHOULD THE DESIGNATED AREA BE UTILIZED FOR BURYING OR BURNING, THE CLEARING LIMITS WOULD BE INCREASED TO INCORPORATE THIS AREA AT NO ADDITIONAL COST TO THE OWNER.

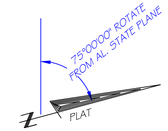

PROJECT #21009
SCALE 1"= 30'

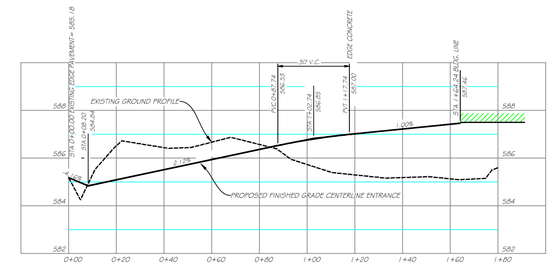

CENTERLINE ENTRANCE PROFILE
SCALE: 1"= 20' HORIZ. / 5' VERT.

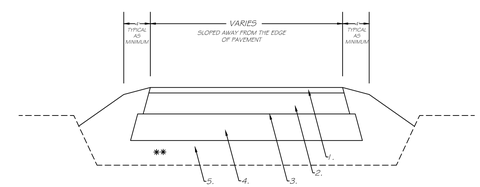

1. SUPERPAVE BITUMINOUS CONCRETE WEARING SURFACE LAYER, ½" MAXIMUM AGGREGATE SIZE MIX, ESAL RANGE C/D, APPROXIMATELY 135 POUNDS PER SQUARE YARD
   ITEM: 424A-360
2. SUPERPAVE BITUMINOUS CONCRETE UPPER BINDER LAYER, 1" MAXIMUM AGGREGATE SIZE MIX, ESAL RANGE C/D, APPROXIMATELY 250 POUNDS PER SQUARE YARD
   ITEM 424B-651
3. BITUMINOUS TREATMENT A
   ITEM: 401A-000
4. CRUSHED AGGREGATE BASE COURSE, TYPE B,PLANT MIXED, 6" COMPACTED THICKNESS
   ITEM: 301A-012
5. BORROW EXCAVATION [(A-2-4(0) OR A-4(0)]
   ITEM: 2100-012

** NOTE: COMPACT TO 100% OF AASHTO T-99

COMMERCIAL DRIVE: ASPHALT
ROADWAY BUILDUP FOR WORK
WITH ALDOT RIGHT-OF-WAY

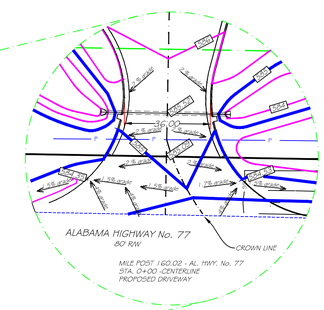

PROJECT REPRESENTATIVES / EMERGENCY CONTACTS:

Tom McElrath Architect / Project Manager 256-490-8244
Wade Buckner Fire Chief 256-458-0250
Scott Skipper Civil Engineer 256-390-9424

ALABAMA REGISTERED No. 20141 PROFESSIONAL ENGINEER & LAND SURVEYOR SCOTT SKIPPER

SURVEYING & CIVIL ENGINEERING BY:
SKIPPER ENGINEERING, INC.
171 WOODLAND DRIVE
RAINBOW CITY, AL. 35906
256-390-9424
scott@skipperengineering.com

ALDOT PERMIT SHEET 2 OF 3

STATE OF ALABAMA
THOMAS M. McELRATH
3072
GADSDEN, ALABAMA
REGISTERED ARCHITECT

THOMAS M. McELRATH, ARCHITECT
ARCHITECTURE and SPACE PLANNING
717 MERIT SPRINGS ROAD
GADSDEN, ALABAMA 35901
PHONE: (256) 490-8244
EMAIL: TOM@TMM-ARCHITECT.COM

A NEW FIRE STATION NO. 1
located at
3170 Highway 77
for the
City of Southside, Alabama

SITE GRADING PLAN

DRAWN	
CHECKED	
SCALE	1"= 30'
DATE	NOVEMBER 15, 2021
FILE	
JOB NO.	21-01
REVISIONS	

SHEET C-3 OF 07 SHEETS

BASIN "A" (SOUTHEAST CORNER OF PROPERTY)

EXISTING CONDITIONS:

0.294 ACRE LAWN, WELL DRAINED SANDY SOIL - "C"=0.30
0.0018 ACRE PAVED - "C"= 0.90

WEIGHTED "C" VALUE= 0.294 (0.3)+ 0.0018 (0.90) / 0.296= 0.303
PATH= 237; FALL= 5'

YR.	STORM	PEAK FLOW (FT³/SEC)
2		0.354
5		0.422
10		0.471
25		0.544
50		0.601

POST PROPOSED IMPROVEMENTS:

0.061 ACRE LAWNS, WELL DRAINED SANDY SOIL - "C"=0.30
0.034 ACRE PAVED - "C"= 0.90

WEIGHTED "C" VALUE= 0.061 (0.3)+ 0.034 (0.90) / 0.095= 0.515
PATH= 120; FALL= 2'

YR.	STORM	PEAK FLOW (FT³/SEC)
2		0.239
5		0.279
10		0.309
25		0.354
50		0.390

BASIN "B" (NORTHEAST CORNER OF PROPERTY)

EXISTING CONDITIONS:

0.245 ACRE LAWN, WELL DRAINED SANDY SOIL - "C"=0.30
0.023 ACRE PAVED - "C"= 0.90

WEIGHTED "C" VALUE= 0.245 (0.3)+ 0.023 (0.90) / 0.268= 0.351
PATH= 143; FALL= 6'

YR.	STORM	PEAK FLOW (FT³/SEC)
2		0.442
5		0.518
10		0.575
25		0.660
50		0.726

POST PROPOSED IMPROVEMENTS:

0.185 ACRE LAWN, WELL DRAINED SANDY SOIL - "C"=0.30
0.037 ACRE PAVED - "C"= 0.90

WEIGHTED "C" VALUE= 0.185 (0.3)+ 0.037 (0.90) / 0.222= 0.400
PATH= 206; FALL= 5'

YR.	STORM	PEAK FLOW (FT³/SEC)
2		0.387
5		0.457
10		0.509
25		0.586
50		0.645

BASIN "C" (WESTERN, MAIN BODY OF PROPERTY)

EXISTING CONDITIONS:

2.01 ACRES ROLLING WOODLAND, SANDY LOAM - "C"=0.20
0.88 ACRE LAWN, WELL DRAINED SANDY LOAM - "C"= 0.30

WEIGHTED "C" VALUE= 2.01 (0.2)+ 0.88 (0.3) / 2.89= 0.230
PATH= 453; FALL= 16'

YR.	STORM	PEAK FLOW (FT³/SEC)
2		2.9
5		3.4
10		3.8
25		4.4
50		4.8

POST PROPOSED IMPROVEMENTS:

2.14 ACRES LAWN, WELL DRAINED SANDY SOIL - "C"=0.30
0.93 ACRE PAVED/ ROOFED - "C"= 0.90

WEIGHTED "C" VALUE= 2.14 (0.3)+ 0.93 (0.90) / 3.07= 0.482
PATH= 480; FALL= 14'

YR.	STORM	PEAK FLOW (FT³/SEC)
2		3.7
5		4.3
10		4.5
25		5.2
50		5.7

BASIN "C" DETENTION POND

AVAILABLE STORAGE

ELEVATION	CONTOUR AREA (FT²)	INCREMENTAL VOLUME (FT³)	TOTAL VOLUME (FT³)
571	0	0	0
572	2134	1067	1067
573	2698	2416	3483
574	3318	3008	6491
575	8994	3656	10147

OUTLET STRUCTURE

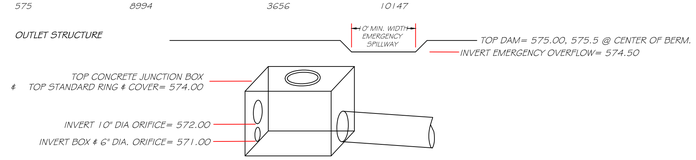

DETENTION POND SUMMARY

YEAR EVENT	PRE IMPROVED PEAK Q (FT³/SEC)	POST DEVELOPED PEAK Q (FT³/SEC)	POND ELEVATION (FT)	POND STORAGE (FT³)	PEAK POND OUTFLOW (FT³/SEC)
2	2.9	3.7	572.99	3097	2.9
5	3.4	4.3	573.24	3857	3.3
10	3.8	4.5	573.41	4359	3.6
25	4.4	5.2	573.72	5281	4.1
50	4.8	5.7	573.97	6040	4.4

STORM WATER NARRATIVE:

IN AN EFFORT TO NOT INCREASE RUNOFF TOWARD THE HIGHWAY AS A RESULT OF IMPROVEMENTS, A PORTION OF THE AREA OF LAND THAT ORIGINALLY DRAINED TOWARD THE FRONT OF THE LOT WILL BE REDIRECTED TOWARD THE REAR OF THE PROPERTY. THE AMOUNT OF RUNOFF FROM REDIRECTED SURFACE AREA BEING SLIGHTLY GREATER THAN THE INCREASE IN RUNOFF DUE TO IMPERVIOUS IMPROVEMENTS ADJACENT TO THE HIGHWAY. THE DETENTION POND AT THE REAR OF THE PROPERTY WILL CONTROL THE PEAK RUNOFF FROM THESE REDIRECTED AREAS AND ALSO THE PEAK RUNOFF FROM IMPROVED AREAS THAT ORIGINALLY DRAINED TO THE REAR OF THE PROPERTY. THE POND IS DESIGNED TO DISCHARGE A LESSER PEAK FLOW THAN DISCHARGED PRIOR TO THIS PROJECT.

NOTE: THE PLAN FOR CONTROL OF EROSION FROM EXITING THIS SITE RELIES HEAVILY ON THE EFFECTIVENESS OF THE DETENTION POND SERVING TEMPORALLY AS A SEDIMENT TRAP. THEREFORE, IT IS MANDATORY THAT THE POND, OUTLET STRUCTURE, RIP-RAP TAIL CHANNEL, AND MEASURES FOR TEMPORARY USE AS A SEDIMENT TRAP BE AN INITIAL PRIORITY.

REQD: PRIOR TO CONSTRUCTION ACTIVITIES (BEYOND CONSTRUCTION OF POND) A TEMPORARY SEDIMENT PIT IS TO BE EXCAVATED W/IN THE DETENTION POND FLOOR BEING APPROXIMATELY 3.5' DEEP, 15' X 20' TOE DIMENSION AND 2:1 SIDE SLOPES. IN ADDITION, THE LOWER 6" DIA. OUT ON THE FACE OF THE OUTLET STRUCTURE IS TO REMAIN PLUGGED. THESE FEATURES ARE TO REMAIN IN EFFECT UNTIL SUCH TIME AS THE SITE IS FULLY STABILIZED. ACCUMULATED SEDIMENT IS TO BE REMOVED WHEN IT HAS REACHED A DEPTH OF 18" IN THE EXCAVATED PIT.

NOTE: THIS SKETCH DEPICTS SURFACE DRAINAGE PATTERNS AND IS FOR THE PURPOSE OF HYDRAULIC CALCULATIONS AND EROSION CONTROL. FOR PROPOSED FINISHED GRADING SEE SHEET C-3.

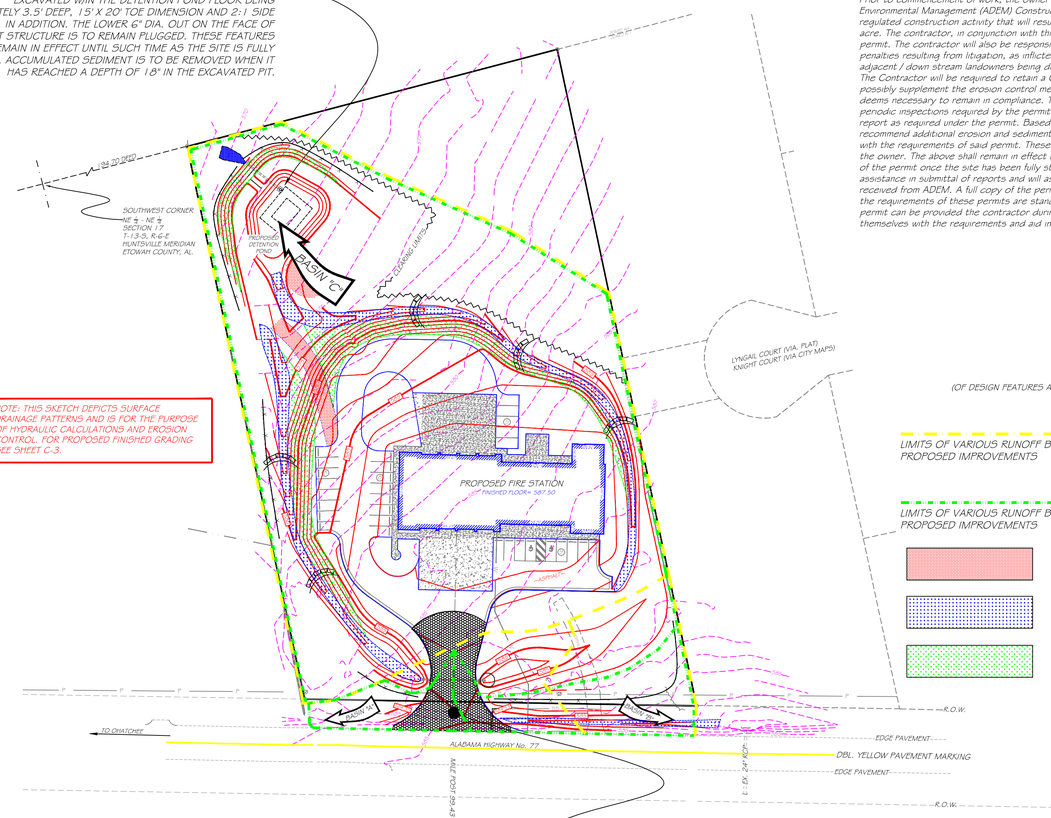

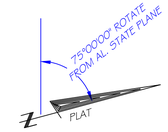

PROJECT #21009
SCALE 1"= 60'

ADEM CONSTRUCTION ACTIVITIES PERMIT

Prior to commencement of work, the owner will have obtained an Alabama Department of Environmental Management (ADEM) Construction Activities Permit for discharges associated with regulated construction activity that will result in land disturbance equal to or greater than one acre. The contractor, in conjunction with this project, will be responsible for compliance with said permit. The contractor will also be responsible for any costs, fines, fees, litigation or / and any penalties resulting from litigation, as inflicted by ADEM or as a result from damages claimed by adjacent / down stream landowners being due to non-compliance with said permit.
The Contractor will be required to retain a Qualified Credentialed Professional (QCP) to review and possibly supplement the erosion control measures reflected within these drawings as he or she deems necessary to remain in compliance. The QPC retained by the contractor shall provide the periodic inspections required by the permit, report results of these inspections to the owner and report as required under the permit. Based on these periodic inspections the QPC may recommend additional erosion and sediment control measures as needed to remain in compliance with the requirements of said permit. These additional measures will be at no additional cost to the owner. The above shall remain in effect until such time as the contractor can obtain termination of the permit once the site has been fully stabilized. The project civil engineer can provide assistance in submittal of reports and will assist in conveyance of documents to be submitted and received from ADEM. A full copy of the permit will be provided to the selected contractor. As the requirements of these permits are standard, a copy of the requirements of a recently obtained permit can be provided the contractor during the bidding process, upon request, to familiarize themselves with the requirements and aid in estimating of cost associated with compliance.

LEGEND
(OF DESIGN FEATURES AND REQUIRED SEDIMENT & EROSION CONTROL MEASURES)

LIMITS OF VARIOUS RUNOFF BASINS PRIOR TO PROPOSED IMPROVEMENTS

LIMITS OF VARIOUS RUNOFF BASINS POST PROPOSED IMPROVEMENTS

REQD: TYPE "A" SILT FENCING

REQD: "HORSE SHOE" ARRANGEMENT OF SILT FENCE BACKED BY STAKED HAY BALES

REQD: INLET PROTECTION

SERVICE ROAD STABILIZED W/ 2" COMPACTED #5 CRUSHER RUN (6,045 SQ.FT.).

REQD: SPECIAL STABILIZATION MEASURES FOR INVERT DITCHING (7000 SQ.FT.) SEE GENERAL NOTES #7 & #8.

REQD: SPECIAL STABILIZATION MEASURES FOR STEEP SLOPES (9450 SQ.FT.) SEE GENERAL NOTES #7..

Schedule of Implementation & general notes:

1.) Silt fence shall be installed prior to any land disturbance activities.

2.) Construction entrance shall be in place prior to hauling operations.

3.) ADEM permit sign shall be placed at entrance to site and a rain gauge shall be made available on-site.

4.) The most significant measure for erosion control of this project is the detention pond. The detention pond and and temporary conversion as a sediment trap pond shall be constructed at the beginning of the project.

5.) Stockpile topsoil for placement after final grades are achieved.

6.) Disturbed areas or stockpiles which will be left for greater than 14 days shall be stabilized with temporary seed, hay and mulch.

7.) The contractor shall strive to achieve permanent stabilization of the site as soon as possible. Slopes steeper than 3.5:1 grade and the invert (together w/ 6" vertical on side slopes) shall receive min. 4" topsoil, staked sod and fertilizer. Other methods for stabilization of steep areas can be utilized under the condition that should they fail then staked sod will be required.

8.) The perimeter drainage ditching is all in a "cut" sceneno. Careful attention should be given not to over excavate as ditching invert being of fill material will be much more difficult to stabilize.

9.) Erosion Control Measures shown and noted are considered to be minimum.

10.) Construction and proper maintenance of most major erosion and sediment control measures can be found in "Alabama Handbook for Erosion Control, Sediment Control and Stormwater Management on Construction Sites and Urban Areas". The handbook can be viewed and copied without charge at http://www.swcc.state.al.us/. The various devices shown on this plan are to be constructed and maintained as per the above referenced Handbook.

11.) All erosion control measures shall be in accordance with the above referenced manual or the manufacture's recommendations and shall be properly maintained.

A CONSTRUCTION EXIT PAD IS REQUIRED AT ANY POINTS OF EXIT FOR TRUCKS. A CONSTRUCTION EXIT PAD IS REQUIRED TO PREVENT MUD AND SOIL FROM LEAVING THE CONSTRUCTION SITE. PAD SHALL CONSIST OF COARSE AGGREGATE 6" MINIMUM THICKNESS. THE WIDTH IS TYPICALLY 20' BUT MAY BE NARROWER OR WIDER TO EQUAL THE FULL WIDTH OF VEHICULAR EGRESS. THE PAD LENGTH WILL BE 50' MINIMUM. IF THE ACTION OF THE VEHICLE TRAVELING OVER THE PAD DOES NOT SUFFICIENTLY REMOVE THE MUD, A WASHING FACILITY SHOULD BE INCLUDED WITH THE PAD. IF A WASHING FACILITY IS USED, ALL WASH WATER SHALL BE DIVERTED TO THE SEDIMENT BASIN DOWNSTREAM. (SEE FIGURE CEP-2 OF THE "ALABAMA HANDBOOK FOR EROSION CONTROL, SEDIMENT CONTROL AND STORMWATER MANAGEMENT ON CONSTRUCTION SITES AND URBAN AREAS" FOR A DETAIL OF CONSTRUCTION EXIT WITH WASHRACK)

GENERAL NOTES:

1.) If fuel or chemcals are stored onsite or maintained onsite, have readily available sufficient oil & grease absorbing material and floatation booms to contain and clean-up fuel or chemical spills and leaks.

2.) All construction and worker debris (e.g. trash, garbage, etc.) must be immediately removed and disposed of in an approved manner as required by State and Federal laws and regulations. Also, soil contaminated by paint or chemical spills, oil spills, etc. must be immediately cleaned up or be removed and disposed of in an approved manner.

3.) Appropriate measures to be taken to prevent the deposition of airborne pollutants such as spray paint, herbicides, excessive road dust, etc. from entering any waterbody.

4.) Run-off from dust suppression operation. Please be advised that the use of used motor oil and other petroleum based or toxic liquids for dust suppression operations is prohibited.

5.) All materials used as fill or for construction purposes must be non-toxic, non-acid forming and free of solid waste or other debris.

6.) No rubbish, trash, garbage, or other such materials shall be discharged into waters of the State

REVISED 8/1/2022: TO REFLECT THE OWNER OBTAINING THE ADEM LAND DISTURBANCE PERMIT AND THE CONTRACTOR BEING RESPONSIBLE FOR COMPLIANCE WITH SAID PERMIT.

LEGEND

IRON PIN FOUND	
P	POWER OR OTHER AERIAL LINE
SS	SANITARY SEWER
W	WATER
	POWER POLE
	GUY WIRE

ALABAMA REGISTERED PROFESSIONAL ENGINEER & LAND SURVEYOR No. 20141 SCOTT SKIPPER

SURVEYING & CIVIL ENGINEERING BY:
SKIPPER ENGINEERING, INC.
171 WOODLAND DRIVE
RAINBOW CITY, AL. 35906
256-390-9424
scott@skipperengineering.com

ALDOT PERMIT SHEET 4 OF 4

STATE OF ALABAMA
THOMAS M. McELRATH 3072
GADSDEN, ALABAMA
REGISTERED ARCHITECT

THOMAS M. McELRATH, ARCHITECT
ARCHITECTURE and SPACE PLANNING
717 MERIT SPRINGS ROAD
GADSDEN, ALABAMA 35901
PHONE: (256) 490-8244
EMAIL: TOM@TMM-ARCHITECT.COM

A NEW FIRE STATION NO. 1
located at
3170 Highway 77
for the
City of Southside, Alabama

STORMWATER HYDRAULICS & EROSION CONTROL PLAN

DRAWN	
CHECKED	
SCALE	1"= 30'
DATE	NOVEMBER 15, 2021
FILE	
JOB NO.	21-01
REVISIONS	

SHEET C-4 OF 07 SHEETS

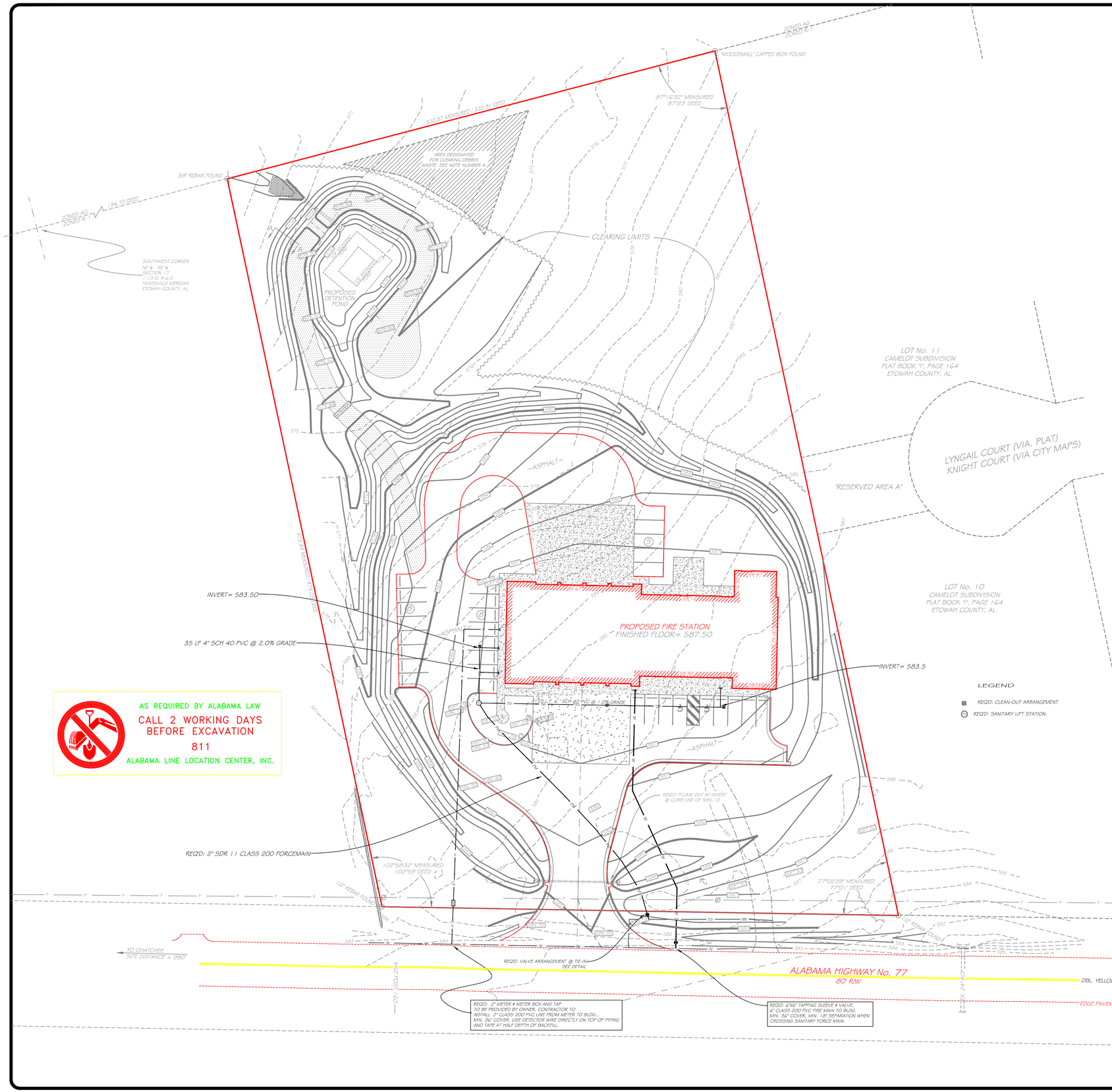

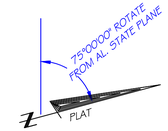

PROJECT #21009
SCALE 1"= 30'

GENERAL UTILITY NOTES:

1.) THE CONTRACTOR SHALL COORDINATE WATER AND SEWER SERVICES WITH THE WATER WORKS & SEWER BOARD OF THE CITY OF SOUTHSIDE, AL. 256-442-8707.
2.) ALL COMPONENTS AND INSTALLATION OF THE SANITARY SEWER COLLECTION SYSTEM SHALL BE IN ACCORDANCE W/ THE WATER WORKS & SEWER BOARD ORDINANCES. NO COMPONENT OF THE SANITARY COLLECTION SYSTEM SHALL BE COVERED UNTIL A REPRESENTATIVE OF THE BOARD IS AFFORDED THE OPPORTUNITY TO INSPECT THE INSTALLATION.
3.) SHOP DRAWINGS OF ALL COMPONENTS OF THE SANITARY COLLECTION SYSTEM SHALL BE SUBMITTED TO THE ARCHITECT AND TO THE WATER WORKS & SEWER BOARD OF THE CITY OF SOUTHSIDE FOR APPROVAL. USE OF OTHER THAN SPECIFIED SANITARY SEWER COMPONENTS WOULD REQUIRE APPROVAL OF THE ARCHITECT AND THE WATER WORKS & SEWER BOARD OF THE CITY OF SOUTHSIDE. IT WOULD BE ADVISABLE TO SEEK SUCH APPROVAL PRIOR TO BIDDING.
4.) ALL TRENCHED BENEATH PAVED AREAS ARE TO BE COMPLETELY BACKFILLED W/ COMPACTED CRUSHED LIMESTONE.
5.) SEE SHEET C-7 FOR ADDITIONAL UTILITY DETAILS AND NOTES.
6.) THE CONTRACTOR IS TO PROVIDE AN ADDITIONAL BACK UP PUMP, IDENTICAL TO THAT PUMP INSTALLED AS PART OF THIS CONTRACT.

AS REQUIRED BY ALABAMA LAW
CALL 2 WORKING DAYS BEFORE EXCAVATION
811
ALABAMA LINE LOCATION CENTER, INC.

LEGEND

	IRON PIN FOUND
— P —	POWER OR OTHER AERIAL LINE
— SS —	SANITARY SEWER
— W —	WATER
	POWER POLE
	GUY WIRE

ALABAMA REGISTERED No. 20141 PROFESSIONAL ENGINEER & LAND SURVEYOR SCOTT SKIPPER

SURVEYING & CIVIL ENGINEERING BY:
SKIPPER ENGINEERING, INC.
171 WOODLAND DRIVE
RAINBOW CITY, AL. 35906
256-390-9424
scott@skipperengineering.com

STATE OF ALABAMA
THOMAS M. McELRATH
3072
GADSDEN, ALABAMA
REGISTERED ARCHITECT

THOMAS M. McELRATH, ARCHITECT
ARCHITECTURE and SPACE PLANNING
717 MERIT SPRINGS ROAD
GADSDEN, ALABAMA 35901
PHONE: (256) 490-8244
EMAIL: TOM@TMM-ARCHITECT.COM

A NEW FIRE STATION NO. 1
located at
3170 Highway 77
for the
City of Southside, Alabama

SITE UTILITY PLAN

DRAWN	
CHECKED	
SCALE	1"= 30'
DATE	NOVEMBER 15, 2021
FILE	
JOB NO.	21-01
REVISIONS	

SHEET C-5 OF 07 SHEETS

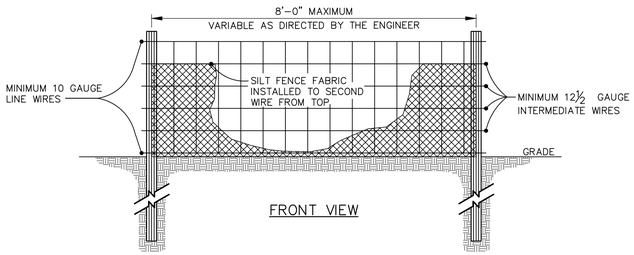

FRONT VIEW

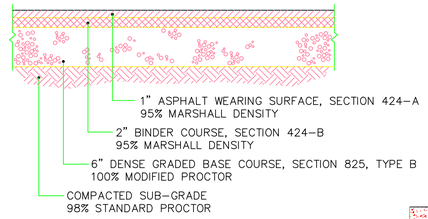

TYPICAL FLEXIBLE PAVEMENT SECTION
NTS
(FOR PAVEMENT OUTSIDE ALDOT RIGHT-OF-WAY)

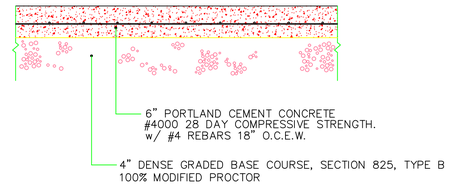

TYPICAL RIGID PAVEMENT SECTION
NTS

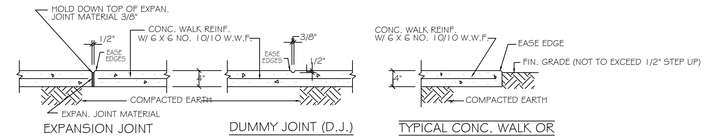

EXPANSION JOINT — DUMMY JOINT (D.J.) — TYPICAL CONC. WALK OR SLAB EDGE DETAIL (UNLESS OTHERWISE SHOWN)

TYPICAL CONC. WALK — NOT TO SCALE

NOTE: ACI RECOMMENDS THAT CONSTRUCTION JOINTS NOT EXCEED A SPACING OF 30 TIMES THE THICKNESS OF THE CONCRETE; THEREFORE, A JOINT SPACING OF NO GREATER THAN 10 FEET IS RECOMMENDED FOR THE 4 INCH PORTLAND CEMENT CONCRETE PAVEMENTS.

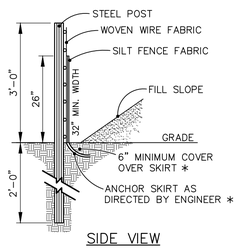

SIDE VIEW

STANDARD TEMPORARY SILT FENCE

NOTE:
USE SILT FENCE ONLY WHEN DRAINAGE AREA DOES NOT EXCEED 1/4 ACRE AND NEVER IN AREAS OF CONCENTRATED FLOW.

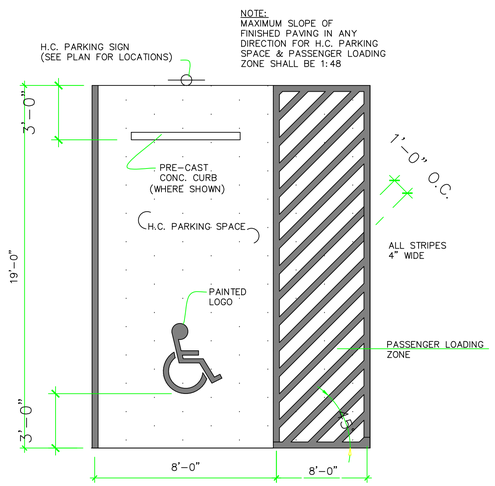

MINIMUM H.C. PARKING LAYOUT
SCALE: 1/4" = 1'-0"

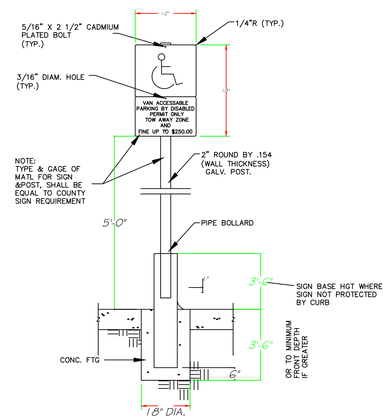

NOTE:
CONTRACTOR SHALL VERIFY ALL THE REQUIRED INFORMATION NECESSARY AT EACH SIGN WITH LOCAL AUTHORITIES PRIOR TO PURCHASING.

TYP. HANDICAP SIGNAGE DETAIL

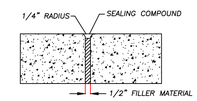

1.) CONTROL JOINT SHALL NOT EXCEED 15' GRID; SAW CUT 1" DEPTH
2.) EXPANSION JOINT AS PER DETAIL NOT TO EXCEED 30' GRID AND AT FACE CURB
3.) CURB JOINTS AS PER STATE (ALDOT) DETAIL.
4.) CONCRETE 4000 PSI AIR ENTRAINED MEDIUM BRUME FINISH ON CURB AND PAVING
5.) TYPICAL PAVEMENT SECTION AS PER GEOTECHNICAL REPORT.

EXPANSION JOINT DETAIL

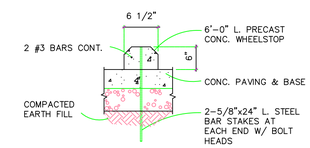

TYP. PRECAST CONC. WHEELSTOP

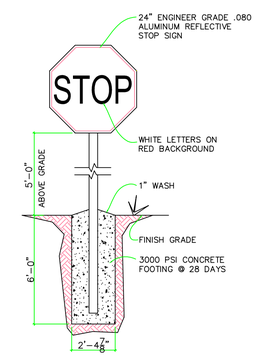

6 / S1 STOP SIGN
SCALE: 3/4"=1'-0"

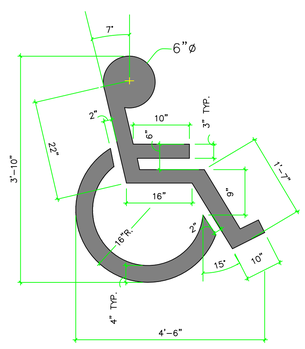

TYPICAL H.C. LOGO DETAIL
SCALE: N.T.S.

NOTE: PAINT COLOR FOR H.C. LOGO & STRIPING SHALL BE BLUE.

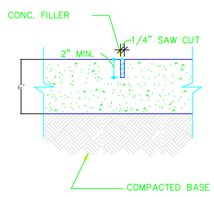

NOTE:
THOROUGHLY CLEAN JOINT OF ALL SAND, SOIL AND MISCELLANEOUS DEBRIS. APPLY MASKING TAPE ALONG SIDES OF JOINT FOR TEMPORARY PROTECTION DURING SEALANT APPLICATIONS. APPLY FULL BEAD OF VULKEM 116 OR 245 (NON SAG) POURABLE SEALANT AND TOOL LIGHTLY. REMOVE TAPE IMMEDIATELY.

TYPICAL SAW CUT DETAIL — N.T.S.

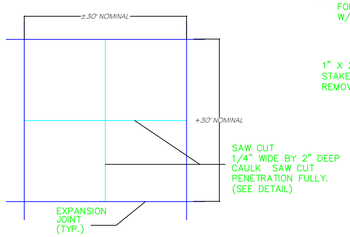

CONC. FILLER

VULKEM 116 OR 245 (NON SAG) JOINT MATERIAL TO BE INSTALLED PER MANUFACTURERS SPECIFICATIONS. PROVIDE LIGHT GREY COLOR TO MATCH CONC.

SAW CUT MUST BE COMPLETED WITHIN 24 HOURS OF POUR.

NOTE:
FORM 30' X 30' NOM. W/ FULL 1" X 6"

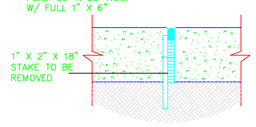

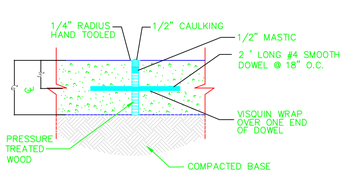

EXPANSION JOINT

TYP. EXPANSION JOINT & REBAR LAYOUT DETAIL — N.T.S.

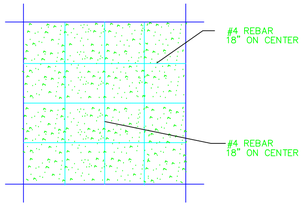

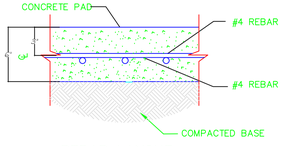

REBAR LAYOUT

ALABAMA REGISTERED No. 20141 PROFESSIONAL ENGINEER & LAND SURVEYOR SCOTT SKIPPER

SURVEYING & CIVIL ENGINEERING BY:
SKIPPER ENGINEERING, INC.
171 WOODLAND DRIVE
RAINBOW CITY, AL 35906
256-390-9424
scott@skipperengineering.com

STATE OF ALABAMA — THOMAS M. McELRATH 3072 — GADSDEN, ALABAMA — REGISTERED ARCHITECT

THOMAS M. McELRATH, ARCHITECT
ARCHITECTURE and SPACE PLANNING
717 MERIT SPRINGS ROAD
GADSDEN, ALABAMA 35901
PHONE: (256) 490-8244
EMAIL: TOM@TMM-ARCHITECT.COM

A NEW FIRE STATION NO. 1
located at
3170 Highway 77
for the
City of Southside, Alabama

MISC. DETAILS

DRAWN	
CHECKED	
SCALE	1"= 30'
DATE	NOVEMBER 15, 2021
FILE	
JOB NO.	21-01
REVISIONS	

SHEET C-6 OF 07 SHEETS

BUILDING CODE COMPLIANCE STUDY

1. ENFORCED CODE: IBC 2015 (As adopted by the City of Southside)

2. TYPE OF CONSTRUCTION: ENTIRE BUILDING TYPE IIB FULLY SPRINKLERED (See Table 601)

3. USE & OCCUPANCY CLASSIFICATION: MIXED OCCUPANCY NON-SEPARATED USES

APPARATUS BAY	STORAGE GROUP S-2
RESIDENTIAL (OTHER THAN INCIDENTAL ACCESSORY OCCUPANCIES LISTED BELOW)	RESIDENTIAL GROUP R-2
ALL OTHER AREAS (OTHER THAN INCIDENTAL ACCESSORY OCCUPANCIES LISTED BELOW)	BUSINESS GROUP B

LAUNDRY AREAS (INCIDENTAL ACCESSORY TO GROUP S-2)

TOTAL GROSS AREA 10,682 S.F.

4. MAXIMUM AREA AND NUMBER OF STORIES: Per Table 504.3 and Table 504.4

ENTIRE BUILDING: ACTUAL TOTAL S.F.: 10,682 S.F. / MAX. ALLOWABLE S.F.: 64,000 S.F

MAX. ALLOWABLE STORIES: 5

5. FIRE RESISTANCE RATINGS (Per Table 601)

Structural Frame (columns):	0 HOURS
Bearing Walls (Exterior):	0 HOURS
Bearing Walls (Interior):	0 HOURS
Exterior non-bearing walls and partitions:	0 HOURS
Interior non-bearing walls and partitions:	0 HOURS
Roof Construction (including supporting beams and joists):	0 HOURS

(Per table 602) see Site Plan for separation distances and fire ratings relative to these requirements.

6. OCCUPANT LOAD (Per Table 1004.1.2)

GROUP B	34
GROUP S-2	26
GROUP R	7

7. EGRESS WIDTH PER OCCUPANT SERVED (Per 1005.3.2)

GROUPS B, R and S2 (inches per occupant) .2

8. AREAS OF REFUGE ("RESCUE ASSISTANCE")

Areas of refuge not required per ADAAG Section 4.1.3 (9) Exception.
Building is Fully Sprinklered

FIRE PROTECTION and LIFE SAFETY LEGEND:

F.E.C. FIRE EXTINGUISHER & CABINET

XX EGRESS SYMBOL – The number indicates the opening's calculated egress load.

CLEAR FLOOR SPACE – Requirement at door, plumbing fixture or cabinet, meeting ADAAG.

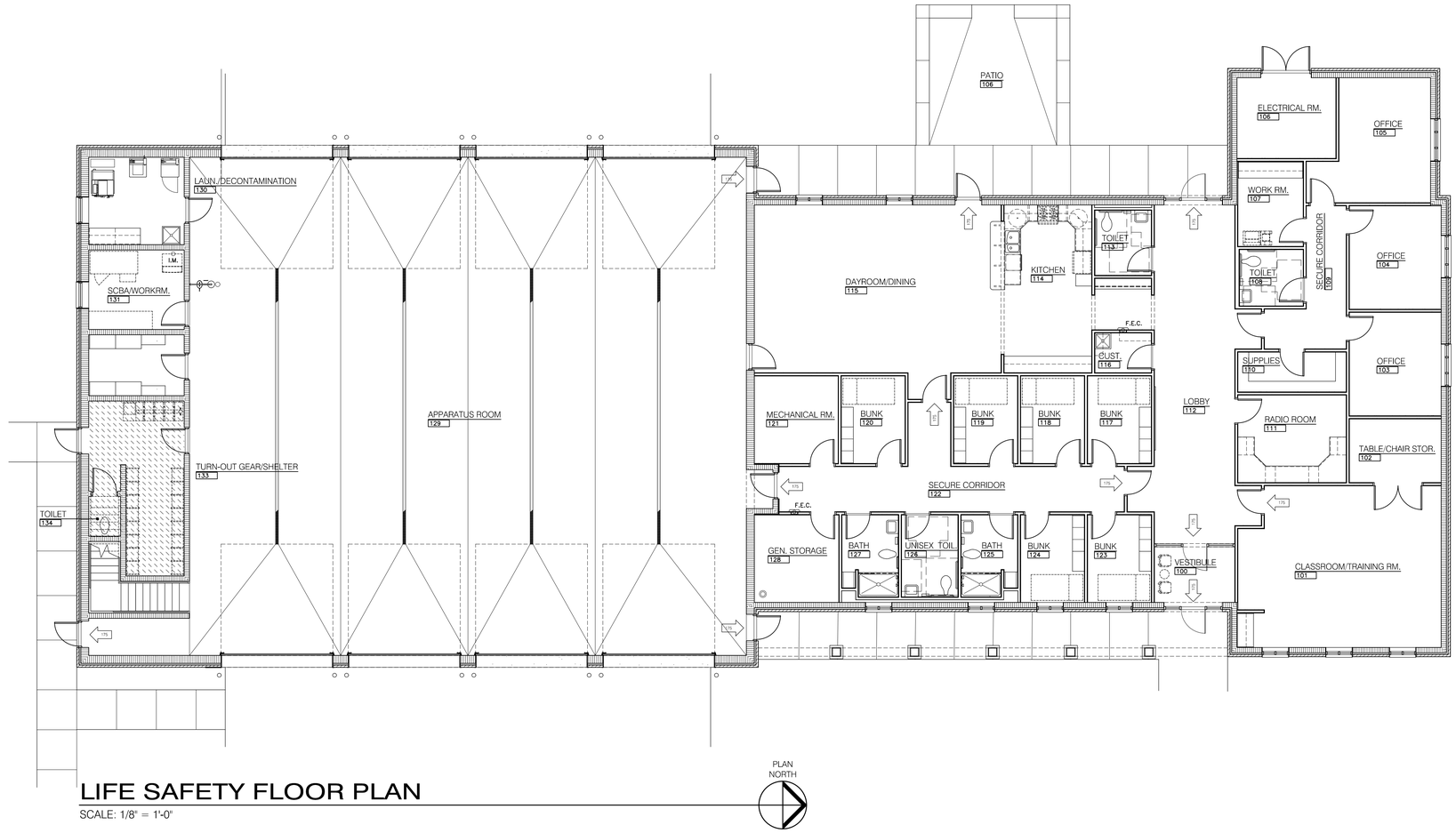

LIFE SAFETY FLOOR PLAN

SCALE: 1/8" = 1'-0"

PLAN NORTH

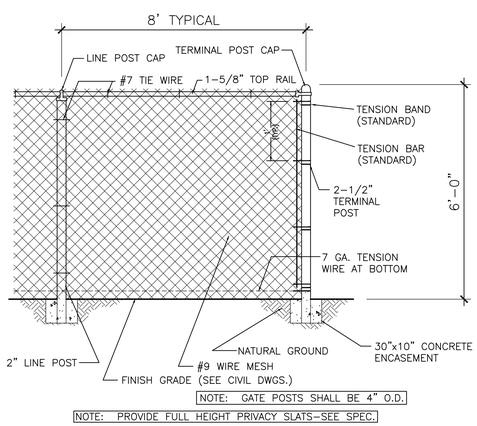

STANDARD CHAINLINK FENCE DETAIL

SC: 1/2" = 1'-0"

SEE CIVIL SITE PLAN for LOCATION

STATE OF ALABAMA
THOMAS M. McELRATH
3072
GADSDEN, ALABAMA
REGISTERED ARCHITECT

THOMAS M. McELRATH, ARCHITECT
ARCHITECTURE and SPACE PLANNING
717 MERIT SPRINGS ROAD
GADSDEN, ALABAMA 35901
PHONE: (256) 490-8244
EMAIL: TOM@TMM-ARCHITECT.COM

A NEW FIRE STATION NO. 1
located at
3170 Highway 77
for the
City of Southside, Alabama

LIFE SAFETY FLOOR PLAN

DRAWN	TMM
CHECKED	TMM
SCALE	AS NOTED
DATE	NOVEMBER 15, 2021
FILE	A2.0 Life Safety FP.dwg
JOB NO.	21-01
REVISIONS	

SHEET A2.0 OF 17 SHEETS

REMOVABLE MEZZANINE GUARD RAIL CONSTRUCTION:

1 1/2" O.D. STL. PIPE TOP INTERMEDIATE & BOTTOM RAILS & 1 1/2" O.D. STL. PIPE VERT. POSTS @ EACH END AND AT QUARTER POINTS– SEE CROSS SECTION FOR SPACING. PROVIDE 1/2" SQUARE STEEL BAR VERT. PICKETS @ 5" O.C. MAX. BETWEEN INTERMEDIATE & BOTTOM RAILS. PROVIDE 1/2" STL. SQ. BAR VERT. PICKETS @ 7" O.C. MAX. BETWEEN INTERMEDIATE & TOP RAILS. SECURE EACH VERTICAL POST INTO VERTICAL LEG OF 6"x6" STEEL EDGE ANGLE W/ FASCIA FLANGE EQUAL TO J.G. BRAUN #KK68–8. WELD FLANGES TO EDGE ANGLE ALL AROUND. SEE DETAIL 3/A6.0

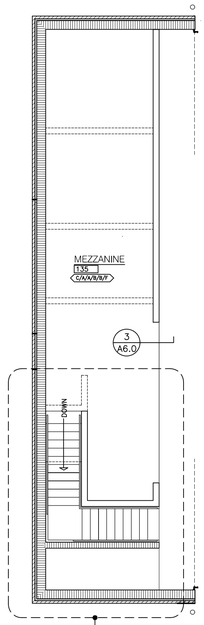

SEE L.S. PLAN SHEET A8.0 FOR ADDITIONAL INFORMATION

MEZZANINE FLOOR PLAN

SCALE: 1/8" = 1'-0"

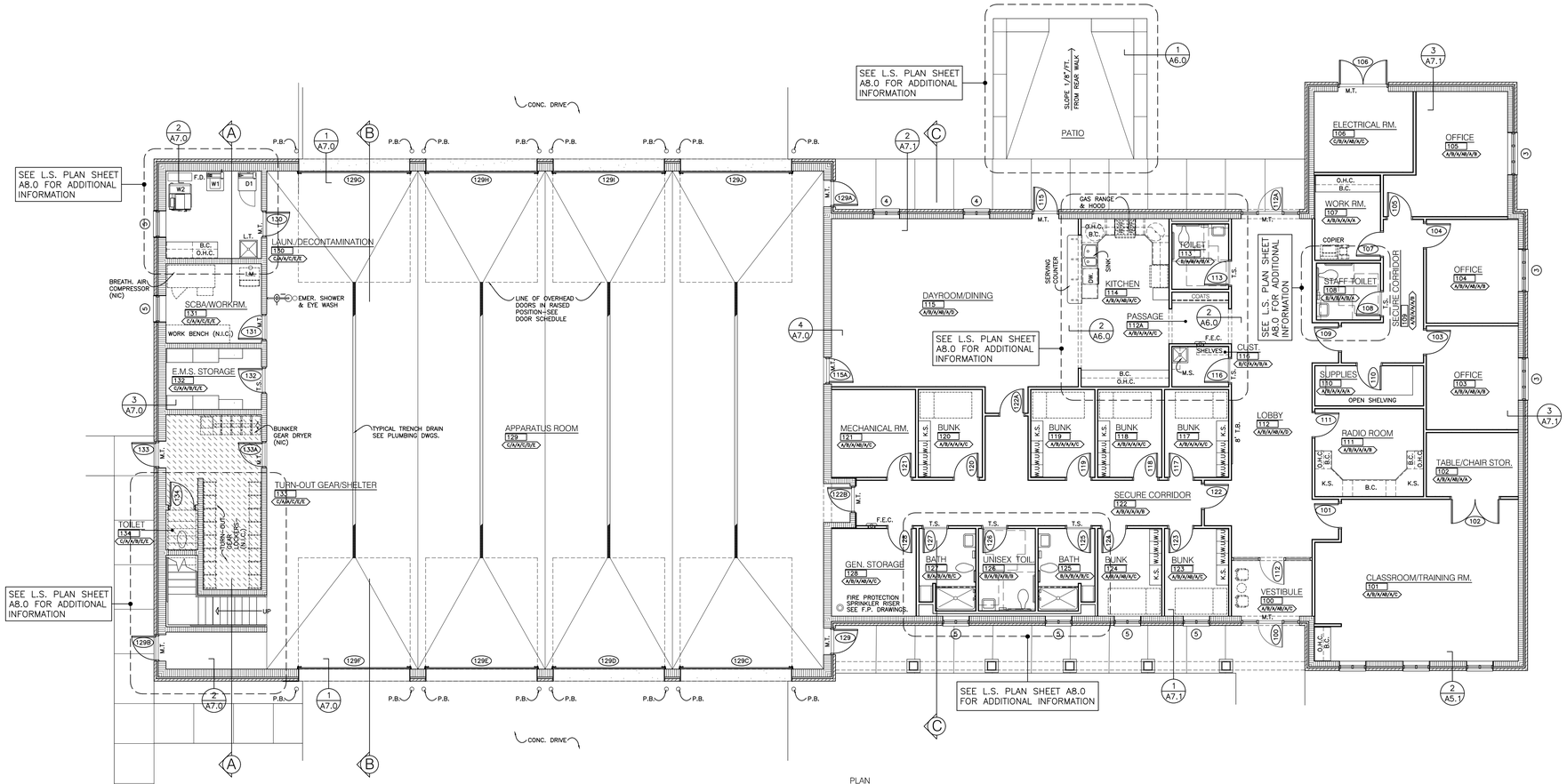

FLOOR PLAN - ARCHITECTURAL NOTES

SCALE: 1/8" = 1'-0"

PLAN NORTH

INTERIOR FINISH LEGEND

FLOOR (U/V/W/X/Y/Z)	
A	RESILIENT FLOOR TILE (LVT)
B	PORCELAIN TILE (THIN-SET)
C	EXPOSED CONCRETE WITH DUST-PROOF HARDENER

WAINSCOT (U/V/W/X/Y/Z)	
A	NONE
B	4'-3" HIGH THIN-SET PORCELAIN TILE

CEILING (U/V/W/X/Y/Z)	
A	NON-RATED LAY-IN SQUARE-EDGE ACOUST. TILE IN 24" x 24" GRID
B	NON-RATED LAY-IN VINYL-FACED ACOUST. TILE IN 24 x 24" GRID
C	EXPOSED STRUCTURE UN-PAINTED
D	GYP. BOARD CEILING OVER CHANNELS SECURED TO TRUSSES
E	EXPOSED STRUCTURE DECK PAINTED WITH SEMI-GLOSS ENAMEL PAINT.

BASE (U/V/W/X/Y/Z)	
A	NONE
B	4" HIGH COVE RUBBER
C	15" HIGH THIN-SET PORCELAIN TILE

WALLS (U/V/W/X/Y/Z)	
A	GYPSUM BOARD WITH EGGSHELL ENAMEL PAINT
B	EXPOSED CONCRETE BLOCK WITH SEMI-GLOSS ENAMEL PAINT
C	EXPOSED CONCRETE OR CONCRETE BLOCK WITH EPOXY PAINT

CEILING HGT. (U/V/W/X/Y/Z)	
A	8'-0"
B	8'-8"
C	9'-4"
D	10'-0"
E	20'-0"
F	8'-9"

ABBREVIATIONS: (APPLICABLE TO ALL ARCHITECTURAL FLOOR PLANS WHERE INDICATED)

A.S.U.	ADJUSTABLE SHELF UNIT
B.C.	BASE CABINET
C.E.S.	CARPET EDGE STRIP at floor
℄	CENTERLINE
D.F.	DRINKING FOUNTAIN – See Plumbing
D.S.	DOWNSPOUT & SPLASHBLOCK – See Roofing
D.	DRYER – See Plumbing and/or Electrical
D.W.	DISHWASHER – N.I.C. – See Plumbing and/or Electrical
F.D.	FLOOR DRAIN – See Plumbing
F.E.C.	FIRE EXTINGUISHER & CABINET
F.O.B.	FACE OF BLOCK OR BRICK
F.O.S.	FACE OF STUDS
F.O.W.	FACE OF WALL
F.S.	FEATURE STRIP at floor – 2" wide unless noted otherwise
HCP.	HANDICAP ACCESSIBLE
H.R.	HAND RAILING – See Typical Details
I.M.	ICE MACHINE – N.I.C. – See Plumbing for Rough-in
LAV.	LAVATORY – See Plumbing
L.T.	LAUNDRY TUB – See Plumbing
M.B.	MARKER BOARD – See Specifications
M.S.	MOP SINK – See Plumbing
M.T.	METAL THRESHOLD
N.I.C	NOT IN CONTRACT
O.C.	ON CENTER
O.H.C.	OVER HEAD CABINET
P.B.	PIPE BOLLARD – See Civil
P.T.	PRESSURE TREATED
REF.	REFRIGERATOR – By Others (N.I.C.)
R.S.	RUBBER REDUCER STRIP at floor
T.B.	TACK BOARD – See Specifications
T.O.S.	TOP OF SLAB
T.S.	METAL TRANSITION STRIP AT PORC. TILE EDGE – See Details & Tile Spec.
T.W.H.	TANKLESS WATER HEATER – See Plumbing
V.S.T.R.	VENT STACK THROUGH ROOF – See Plumbing
W1.	WASHING MACHINE – N.I.C. – See Plumbing for Rough-in
W2.	EXTRACTOR WASHING MACHINE – N.I.C. – See Plumbing for Rough-in
W.C.	WATER CLOSET – See Plumbing

STATE OF ALABAMA
THOMAS M. McELRATH
3072
GADSDEN, ALABAMA
REGISTERED ARCHITECT

THOMAS M. McELRATH, ARCHITECT
ARCHITECTURE and SPACE PLANNING
717 MERIT SPRINGS ROAD
GADSDEN, ALABAMA 35901
PHONE: (256) 490-8244
EMAIL: TOM@TMM-ARCHITECT.COM

A NEW FIRE STATION NO. 1
located at
3170 Highway 77
for the
City of Southside, Alabama

FLOOR PLAN
ARCH. NOTES

DRAWN	TMM
CHECKED	TMM
SCALE	AS NOTED
DATE	NOVEMBER 15, 2021
FILE	A2.1–2.2 Floor Plans.dwg
JOB NO.	21–01
REVISIONS	

SHEET A2.1 OF 17 SHEETS

REMOVABLE MEZZANINE GUARD RAIL CONSTRUCTION:

1 1/2" O.D. STL. PIPE TOP INTERMEDIATE & BOTTOM RAILS & 1 1/2" O.D. STL. PIPE VERT. POSTS @ EACH END AND AT QUARTER POINTS– SEE CROSS SECTION FOR SPACING. PROVIDE 1/2" SQUARE STEEL BAR VERT. PICKETS @ 5" O.C. MAX. BETWEEN INTERMEDIATE & BOTTOM RAILS. PROVIDE 1/2" STL. SQ. BAR VERT. PICKETS @ 7" O.C. MAX. BETWEEN INTERMEDIATE & TOP RAILS. SECURE EACH VERTICAL POST INTO VERTICAL LEG OF 6"x6" STEEL EDGE ANGLE W/ FASCIA FLANGE EQUAL TO J.G. BRAUN #KK68–8. WELD FLANGES TO EDGE ANGLE ALL AROUND. SEE DETAIL 3/A6.0

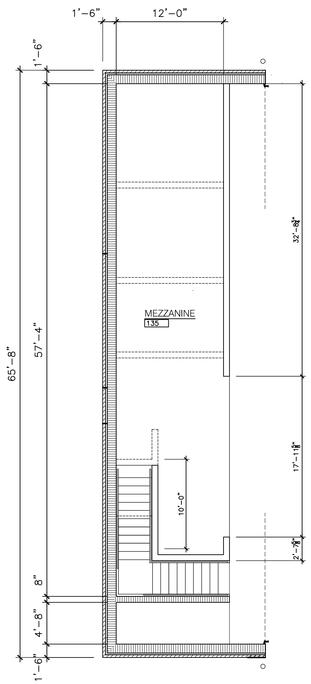

MEZZANINE FLOOR PLAN

SCALE: 1/8" = 1'-0"

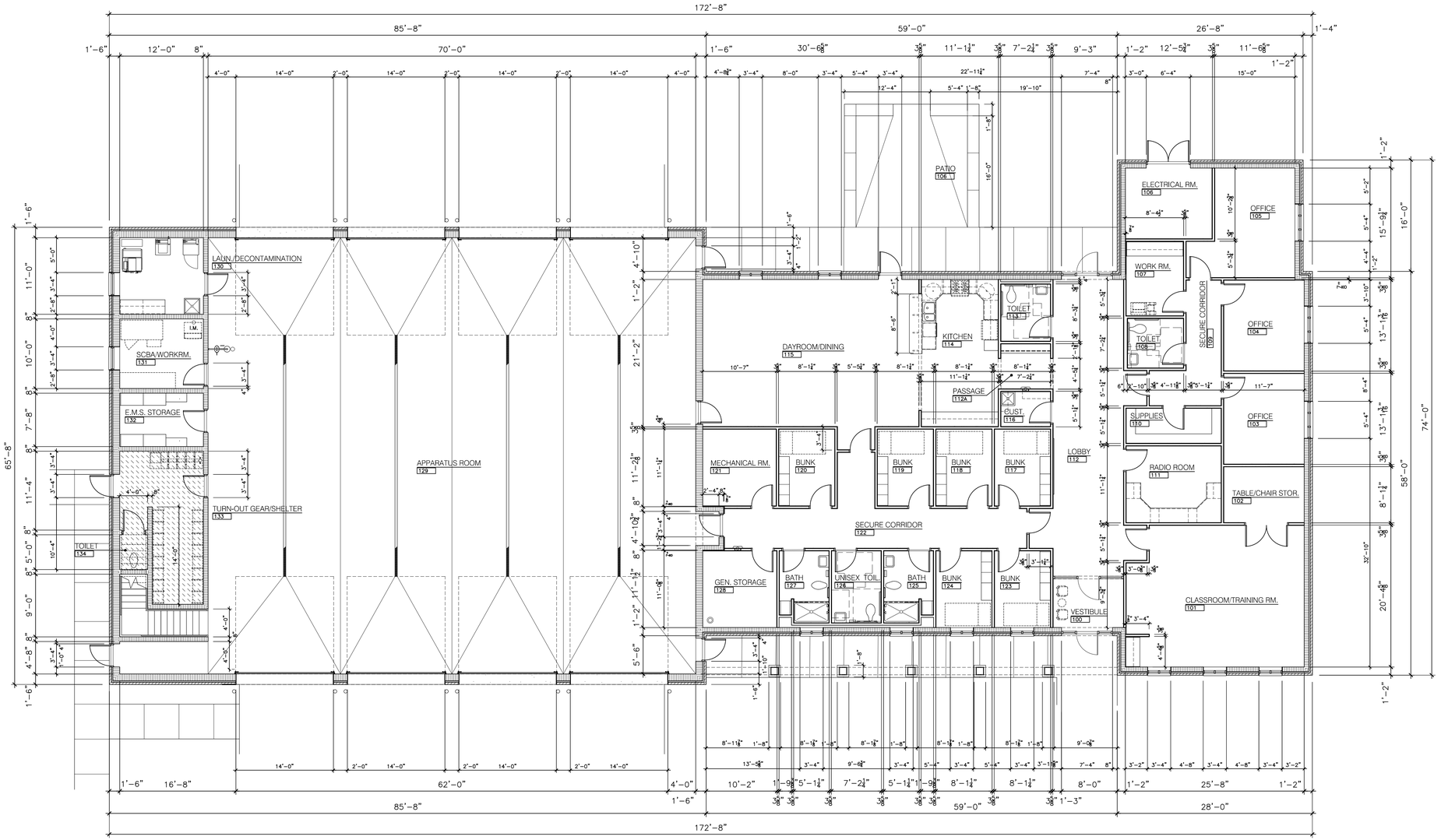

FLOOR PLAN - DIMENSIONS

SCALE: 1/8" = 1'-0"

PLAN NORTH

FLOOR PLAN LEGEND: (APPLICABLE TO ALL ARCHITECTURAL FLOOR PLANS)

- NEW 1'–6" th. EXTERIOR WALL: Nominal 4" th. face brick, air space, mastic damp proofing and 12" th. concrete block with foamed–in–place masonry wall insulation. See Structural for required reinforcing and other specifications.
- NEW 1'–6" th. EXTERIOR WALL: Nominal 4" th. face brick, air space, 1–1/2" th. rigid insulation board, mastic dampproofing and 12" th. concrete block with full height grout fill. See Structural for required reinforcing and other specifications.
- NEW 1'–2" th. EXTERIOR WALL: Nominal 4" th. face brick, air space, mastic damp proofing and 8" th. concrete block with foamed–in–place masonry wall insulation. See Structural for required reinforcing and other specifications.
- NEW INTERIOR MASONRY WALL: Concrete block in thickness as shown. Build all non load bearing interior block masonry walls to a minimum 4" above highest adjacent ceiling unless detailed or indicated otherwise.
- NEW INTERIOR MASONRY WALL: Concrete block in thickness as shown with foamed–in–place masonry wall insulation. Build all non load bearing interior block masonry walls to a minimum 4" above highest adjacent ceiling unless detailed or indicated otherwise.
- NEW INTERIOR MASONRY WALL: Concrete block in thickness as shown with full height grout fill. See Structural for required reinforcing and other specifications. with sections and Structural for height.
- NEW INTERIOR DRYWALL PARTITION: 3–5/8" th. x 20 gauge metal studs at 24" o.c. with one(1) layer of 5/8" th. gypsum board on each face. Provide full–width/full–height unfaced batt insulation between studs. Extend to 4" above highest adjacent ceiling, unless detailed or noted otherwise.
- NEW INTERIOR DRYWALL PARTITION: 3–5/8" th. x 20 gauge metal studs at 24" o.c. with one(1) layer of 5/8" th. gypsum board on one side only. Provide full–width/full–height unfaced batt insulation between studs. Extend to 4" above highest adjacent ceiling, unless detailed or noted otherwise.
- NEW GYPSUM BOARD & METAL FURRING: 7/8" dp. metal furring channels at 24" o.c. with one(1) layer of 5/8" th. gypsum board on face, over concrete block or cast–in–place concrete. Build to a point 4" (min.) above ceiling unless detailed or noted otherwise.
- SYMBOL INDICATING: Concrete block partitions to be extended from a point above the highest adjacent ceiling to the roof deck above.
- WALL SECTION/DETAIL KEY – The wall section or detail number is located at the top and the number of the sheet it is on is located at the bottom.
- BUILDING CROSS SECTION KEY – The cross section number is located at the top and the number of the sheet it is on is located at the bottom.
- ROOM NUMBER SYMBOL – See "Schedule of Finishes"
- ROOM FINISH SYMBOL – See "Schedule of Finishes"
- DOOR SYMBOL – See "Schedule of Doors and Frames"
- WINDOW SYMBOL – See "Window Schedule"
- ACCESSORY SYMBOL – See "Schedule of Toilet Accessories"
- NOTE SYMBOL – See "Notes" applicable to the specific plan, elevation, section, or detail
- CASEWORK SYMBOL – See "Schedule of Casework"
- EXISTING SPOT GRADE – Elevation as noted
- NEW SPOT GRADE – Elevation as noted
- NEW EXTERIOR CONCRETE WORK – Expansion joints as detailed & dummy joints as shown & detailed. See typical details & Civil Dwgs.
- LINE OF 1 HR. FIRE RATED BARRIER
- AREA OF FEMA 361 TORNADO SHELTER

DIMENSION NOTE:

ALL DIMENSIONS ARE SHOWN TO FACE OF STUDS, MASONRY, CONCRETE, OR STEEL STRUCTURE; OR TO CENTERLINE OF COLUMNS – UNLESS SHOWN OR NOTED OTHERWISE.

GYPSUM BOARD / MASONRY INTERSECTION:

PROVIDE CASING BEAD & CAULK AT ALL LOCATIONS WHERE GYPSUM BOARD PARTITIONS TERMINATE AGAINST MASONRY.

CONCEALED WOOD BLOCKING at STUD PARTITIONS:

PROVIDE CONCEALED 2x6 WOOD BLOCKING IN STUD PARTITIONS, WHERE REQUIRED TO ADEQUATELY ANCHOR & SUPPORT ALL WALL–MOUNTED ITEMS, INCLUDING BUT NOT LIMITED TO GRAB BARS AND OTHER TOILET ACCESSORIES, CASEWORK, MILLWORK, PLUMBING FIXTURES & TRIM, WALL–MOUNTED DOOR STOPS, WALL–MOUNTED TELEVISION BRACKETS, AND HANDRAIL BRACKETS. SEE SPECIFIC DISCIPLINES FOR LOCATIONS.

DOWNSPOUT LOCATION COORDINATION:

COORDINATE ALL DOWNSPOUT LOCATIONS WITH CIVIL, ROOFING AND ELEVATIONS DRAWINGS. FINAL LOCATIONS SHALL BE CONFIRMED BY THE ARCHITECT AND CIVIL CONSULTANTS FOR PROPER FUNCTION AND TIE–IN AND WITH THE ARCHITECT FOR PROPER AESTHETICS.

IDENTIFICATION OF FIRE–RATED WALLS:

ALL FIRE RATED WALLS AND PARTITIONS SHALL BE PERMANENTLY IDENTIFIED ABOVE THE CEILING LINE WITH WORDING AS FOLLOWS:

2 HOUR FIRE BARRIER – PROTECT ALL OPENINGS

OR

1 HOUR FIRE BARRIER – PROTECT ALL OPENINGS

SUCH IDENTIFICATION SHALL CONSIST OF 2" HIGH RED LETTERS PAINTED DIRECTLY ON BOTH SIDES OF THE WALL. USE RED ENAMEL PAINT. SPACING SHALL BE 10'–0" O.C. MAXIMUM.

SEE SPEC. SECTION 09900.

SEE FLOOR PLAN THIS SHEET FOR THE LOCATION OF ALL FIRE–RATED WALLS AND PARTITIONS.

STATE OF ALABAMA
THOMAS M. McELRATH
3072
GADSDEN, ALABAMA
REGISTERED ARCHITECT

THOMAS M. McELRATH, ARCHITECT
ARCHITECTURE and SPACE PLANNING
717 MERIT SPRINGS ROAD
GADSDEN, ALABAMA 35901
PHONE: (256) 490-8244
EMAIL: TOM@TMM-ARCHITECT.COM

A NEW FIRE STATION NO. 1
located at
3170 Highway 77
for the
City of Southside, Alabama

FLOOR PLAN DIMENSIONS

DRAWN	TMM
CHECKED	TMM
SCALE	AS NOTED
DATE	NOVEMBER 15, 2021
FILE	A2.1–2.2 Floor Plans.dwg
JOB NO.	21–01
REVISIONS	

SHEET A2.2 OF 17 SHEETS

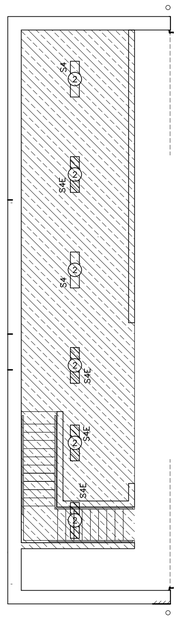

MEZZANINE FLOOR PLAN

SCALE: 1/8" = 1'-0"

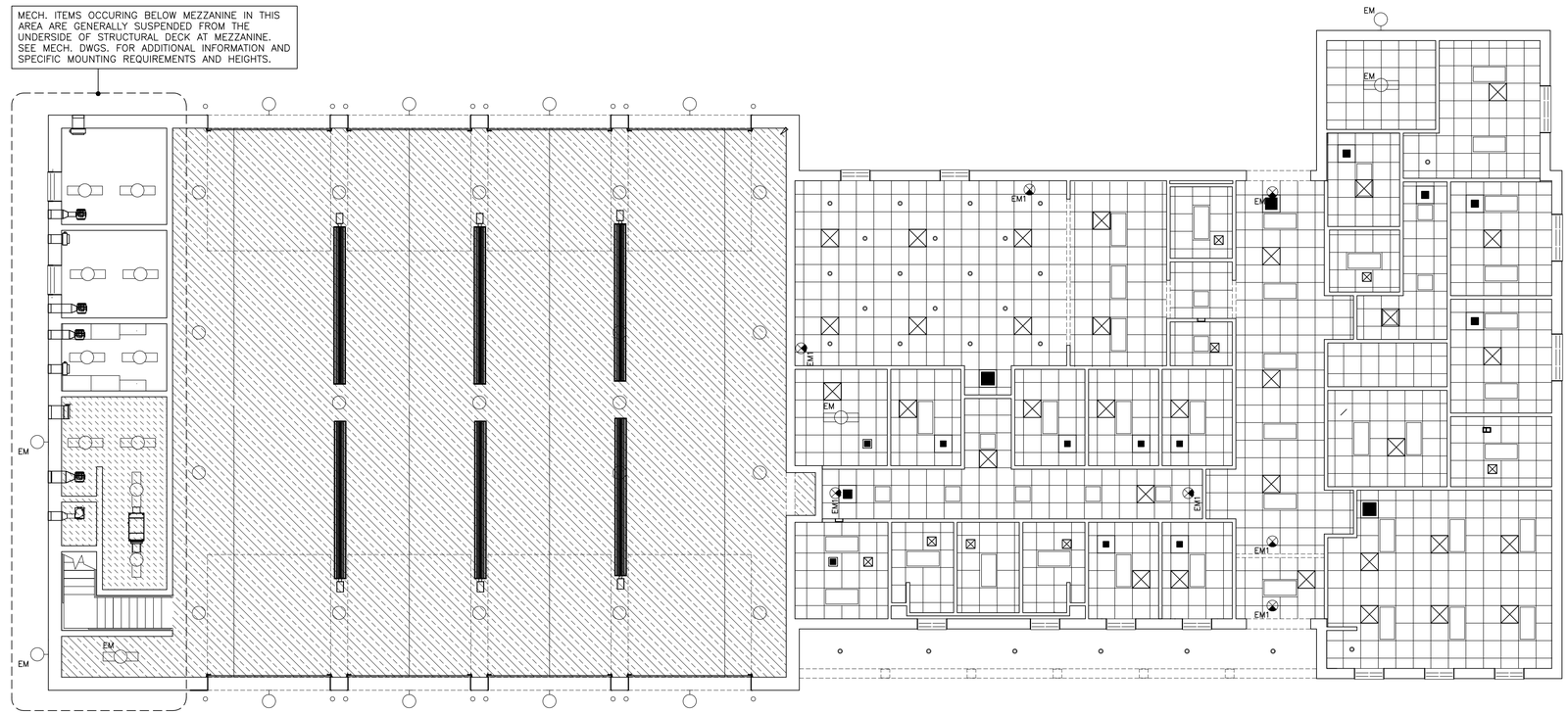

REFLECTED CEILING PLAN

SCALE: 1/8" = 1'-0"

PLAN NORTH

REFLECTED CEILING LEGEND:

- 2'x2' LAY–IN CEILING SYSTEMS: See Finish Schedule and Specifications.
- 2'x4' LAY–IN LIGHT FIXTURE: See Electrical.
- 1'x4' LAY–IN LIGHT FIXTURE: See Electrical.
- WALL MOUNTED LIGHT FIXTURE: See Electrical.
- EM — CEILING OR WALL MOUNTED EXIT LIGHT FIXTURE: See Electrical.
- 2'x2' LAY–IN LIGHT FIXTURE: See Electrical.
- 1'x4' SURFACE MOUNTED LIGHT FIXTURE: See Electrical.
- RECESSED CAN LIGHT FIXTURE: See Electrical.
- PENDANT LIGHT FIXTURE: See Electrical.
- CEILING MOUNTED DIFFUSER: See Mechanical.
- CEILING MOUNTED RETURN: See Mechanical.
- CEILING MOUNTED EXHAUST GRILLE: See Mechanical.
- GAS–FIRED INFRARED HEATERS: See Mechanical
- EXPOSED GYPSUM BOARD CEILING – See Finish Schedule and Specifications.

STATE OF ALABAMA
THOMAS M. McELRATH
3072
GADSDEN, ALABAMA
REGISTERED ARCHITECT

THOMAS M. McELRATH, ARCHITECT
ARCHITECTURE and SPACE PLANNING
717 MERIT SPRINGS ROAD
GADSDEN, ALABAMA 35901
PHONE: (256) 490-8244
EMAIL: TOM@TMM-ARCHITECT.COM

A NEW FIRE STATION NO. 1
located at
3170 Highway 77
for the
City of Southside, Alabama

REFLECTED CEILING PLAN

DRAWN	TMM
CHECKED	TMM
SCALE	AS NOTED
DATE	NOVEMBER 15, 2021
FILE	A2.3_RCP.dwg
JOB NO.	21–01
REVISIONS	

SHEET A2.3 OF 17 SHEETS

SCHEDULE of DOORS and FRAMES

DOORS						FRAMES						MISC.
MARK	TYPE	SIZE WIDTH	SIZE HGT.	SIZE THICK	MATERIAL	TYPE	DETAILS HEAD	DETAILS JAMB	DETAILS SILL	MATERIAL	FIRE RATING	REMARKS
100	I	3'-0"	7'-0"	1 3/4"	ALUM	1	1/A3.2	1/A3.2	1/A3.2	ALUM	NONE	
101	G	3'-0"	7'-0"	1 3/4"	WOOD	8	15/A3.1	16/A3.1	17/A3.1	H'MET.	NONE	
102	H	6'-0"	7'-0"	1 3/4"	WOOD	8	15/A3.1	16/A3.1	17/A3.1	H'MET.	NONE	
103	G	3'-0"	7'-0"	1 3/4"	WOOD	8	15/A3.1	16/A3.1	17/A3.1	H'MET.	NONE	
104	G	3'-0"	7'-0"	1 3/4"	WOOD	8	15/A3.1	16/A3.1	17/A3.1	H'MET.	NONE	
105	G	3'-0"	7'-0"	1 3/4"	WOOD	8	15/A3.1	16/A3.1	17/A3.1	H'MET.	NONE	
106	E	6'-0"	7'-0"	1 3/4"	H'MET.	6	7/A3.1	8/A3.1	9/A3.1	H'MET.	NONE	
107	G	3'-0"	7'-0"	1 3/4"	WOOD	8	15/A3.1	16/A3.1	17/A3.1	H'MET.	NONE	
108	F	3'-0"	7'-0"	1 3/4"	WOOD	8	15/A3.1	16/A3.1	17/A3.1	H'MET.	NONE	
109	G	3'-0"	7'-0"	1 3/4"	WOOD	8	15/A3.1	16/A3.1	17/A3.1	H'MET.	NONE	
110	F	3'-0"	7'-0"	1 3/4"	WOOD	8	15/A3.1	16/A3.1	17/A3.1	H'MET.	NONE	
111	G	3'-0"	7'-0"	1 3/4"	WOOD	8	15/A3.1	16/A3.1	17/A3.1	H'MET.	NONE	
112	I	3'-0"	7'-0"	1 3/4"	ALUM	2	2/A3.2	2/A3.2	2/A3.2	ALUM	NONE	
112A	I	3'-0"	7'-0"	1 3/4"	ALUM	1	1/A3.2	1/A3.2	1/A3.2	ALUM	NONE	
113	F	3'-0"	7'-0"	1 3/4"	WOOD	8	15/A3.1	16/A3.1	17/A3.1	H'MET.	NONE	
115	C	3'-0"	7'-0"	1 3/4"	FRP FACED ALUM.	6	7/A3.1	8/A3.1	9/A3.1	H'MET.	NONE	
115A	C	3'-0"	7'-0"	1 3/4"	FRP FACED ALUM.	6	11/A3.1	12/A3.1	13/A3.1	H'MET.	NONE	
116	F	3'-0"	7'-0"	1 3/4"	WOOD	8	15/A3.1	16/A3.1	17/A3.1	H'MET.	NONE	
117	F	3'-0"	7'-0"	1 3/4"	WOOD	8	15/A3.1	16/A3.1	17/A3.1	H'MET.	NONE	
118	F	3'-0"	7'-0"	1 3/4"	WOOD	8	15/A3.1	16/A3.1	17/A3.1	H'MET.	NONE	
119	F	3'-0"	7'-0"	1 3/4"	WOOD	8	15/A3.1	16/A3.1	17/A3.1	H'MET.	NONE	
120	F	3'-0"	7'-0"	1 3/4"	WOOD	8	15/A3.1	16/A3.1	17/A3.1	H'MET.	NONE	
121	F	3'-0"	7'-0"	1 3/4"	WOOD	8	15/A3.1	16/A3.1	17/A3.1	H'MET.	NONE	
122	F	3'-0"	7'-0"	1 3/4"	WOOD	8	15/A3.1	16/A3.1	17/A3.1	H'MET.	NONE	
122A	F	3'-0"	7'-0"	1 3/4"	WOOD	8	15/A3.1	16/A3.1	17/A3.1	H'MET.	NONE	
122B	B	3'-0"	7'-0"	1 3/4"	FRP FACED ALUM.	5	11/A3.1	12/A3.1	13/A3.1	H'MET.	NONE	
123	F	3'-0"	7'-0"	1 3/4"	WOOD	8	15/A3.1	16/A3.1	17/A3.1	H'MET.	NONE	
124	F	3'-0"	7'-0"	1 3/4"	WOOD	8	15/A3.1	16/A3.1	17/A3.1	H'MET.	NONE	
125	F	3'-0"	7'-0"	1 3/4"	WOOD	8	15/A3.1	16/A3.1	17/A3.1	H'MET.	NONE	
126	F	3'-0"	7'-0"	1 3/4"	WOOD	8	15/A3.1	16/A3.1	17/A3.1	H'MET.	NONE	
127	F	3'-0"	7'-0"	1 3/4"	WOOD	8	15/A3.1	16/A3.1	17/A3.1	H'MET.	NONE	
128	F	3'-0"	7'-0"	1 3/4"	WOOD	8	15/A3.1	16/A3.1	17/A3.1	H'MET.	NONE	
129	C	3'-0"	7'-0"	1 3/4"	FRP FACED ALUM.	6	4/A3.1	5/A3.1	6/A3.1	H'MET.	NONE	
129A	C	3'-0"	7'-0"	1 3/4"	FRP FACED ALUM.	6	4/A3.1	5/A3.1	6/A3.1	H'MET.	NONE	
129B	C	3'-0"	7'-0"	1 3/4"	FRP FACED ALUM.	6	4/A3.1	5/A3.1	6/A3.1	H'MET.	NONE	
129C	A	14'-0"	14'-0"	–	ALUM	–	1/A3.1	2/A3.1	3/A3.1	STEEL	NONE	
129D	A	14'-0"	14'-0"	–	ALUM	–	1/A3.1	2/A3.1	3/A3.1	STEEL	NONE	
129E	A	14'-0"	14'-0"	–	ALUM	–	1/A3.1	2/A3.1	3/A3.1	STEEL	NONE	
129F	A	14'-0"	14'-0"	–	ALUM	–	1/A3.1	2/A3.1	3/A3.1	STEEL	NONE	
129G	A	14'-0"	14'-0"	–	ALUM	–	1/A3.1	2/A3.1	3/A3.1	STEEL	NONE	
129H	A	14'-0"	14'-0"	–	ALUM	–	1/A3.1	2/A3.1	3/A3.1	STEEL	NONE	
129I	A	14'-0"	14'-0"	–	ALUM	–	1/A3.1	2/A3.1	3/A3.1	STEEL	NONE	
129J	A	14'-0"	14'-0"	–	ALUM	–	1/A3.1	2/A3.1	3/A3.1	STEEL	NONE	
130	C	3'-0"	7'-0"	1 3/4"	FRP FACED ALUM.	6	11/A3.1	12/A3.1	13/A3.1	H'MET.	NONE	
131	C	3'-0"	7'-0"	1 3/4"	FRP FACED ALUM.	6	11/A3.1	12/A3.1	13/A3.1	H'MET.	NONE	
132	B	3'-0"	7'-0"	1 3/4"	FRP FACED ALUM.	6	11/A3.1	12/A3.1	13/A3.1	H'MET.	NONE	
133	D	3'-0"	7'-0"	1 3/4"	H'MET.	7	4/A3.1	5/A3.1	6/A3.1	H'MET.	NONE	FEMA 361 OPENING–SEE SPEC.
133A	D	3'-0"	7'-0"	1 3/4"	H'MET.	7	11/A3.1	12/A3.1	13/A3.1	H'MET.	NONE	FEMA 361 OPENING–SEE SPEC.
134	D	3'-0"	7'-0"	1 3/4"	H'MET.	6	11/A3.1	12/A3.1	13/A3.1	H'MET.	NONE	

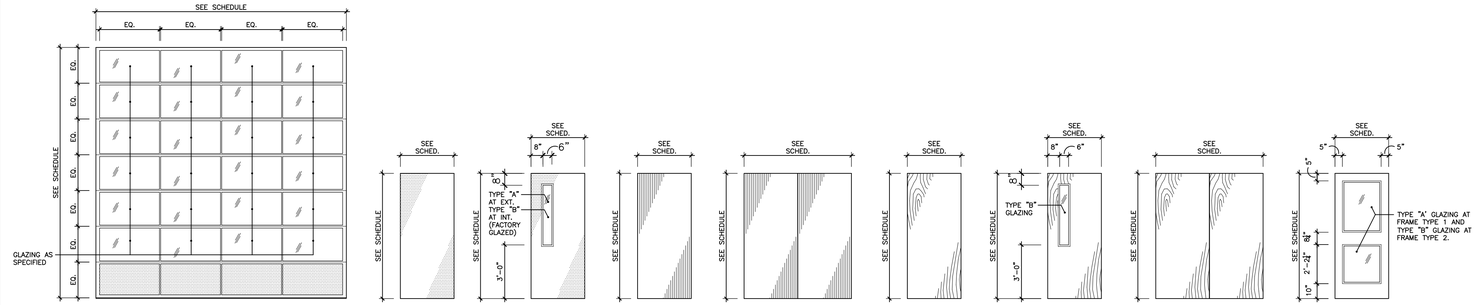

A — SECTIONAL OVERHEAD ALUMINUM DOOR AS SPECIFIED

B — FRP–FACED FLUSH ALUM. FRAMED DOOR AS SPECIFIED

C — FRP–FACED FLUSH ALUM. FRAMED DOOR AS SPECIFIED

D — FLUSH HOLLOW METAL DOOR IN GAUGE AS SPECIFIED

E — FLUSH HOLLOW METAL DOOR IN GAUGE AS SPECIFIED

F — FLUSH SOLID–CORE WD DOOR W/ FACE VENEER SPECIFIED

G — FLUSH SOLID–CORE WD DOOR W/ FACE VENEER SPECIFIED

H — FLUSH SOLID–CORE WD DOOR W/ FACE VENEER SPECIFIED

I — WIDE STILE ALUM. DOOR AS SPECIFIED

DOOR TYPE ELEVATIONS

SCALE: 1/4" = 1'-0"

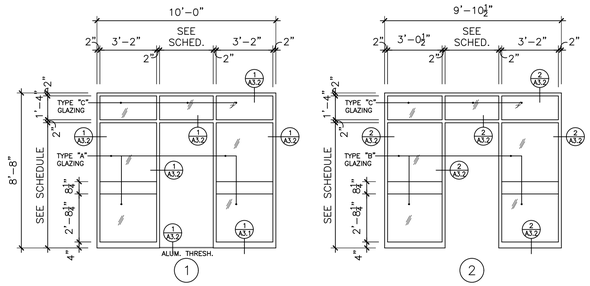

1 — EXTERIOR ALUMINUM STOREFRONT AS SPECIFIED

2 — INTERIOR ALUMINUM STOREFRONT AS SPECIFIED

ALUMINUM STOREFRONT DOOR FRAME TYPE ELEVATIONS

SCALE: 1/4" = 1'-0"

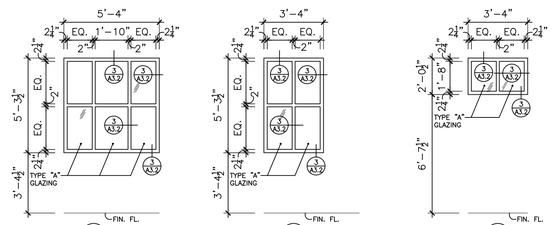

3 — ALUMINUM STOREFRONT AS SPECIFIED

4 — ALUMINUM STOREFRONT AS SPECIFIED

5 — ALUMINUM STOREFRONT AS SPECIFIED

WINDOW TYPE ELEVATIONS

SCALE: 1/4" = 1'-0"

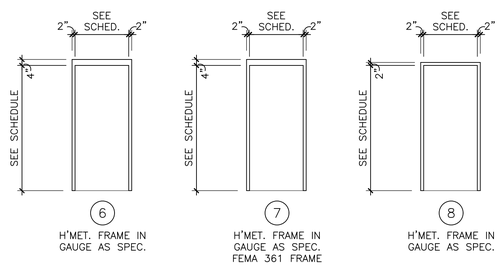

6 — H'MET. FRAME IN GAUGE AS SPEC.

7 — H'MET. FRAME IN GAUGE AS SPEC. FEMA 361 FRAME

8 — H'MET. FRAME IN GAUGE AS SPEC.

HOLLOW METAL FRAME TYPE ELEVATIONS

SCALE: 1/4" = 1'-0"

SCHEDULE of GLAZING TYPES for DOORS, WINDOWS & SIDELITES	
TYPE	DESCRIPTION
A	1" TH. "CLEAR" TEMPERED INSULATING GLASS with "LOW E" COATING AS SPECIFIED.
B	1/4" TH. "CLEAR" TEMPERED SAFETY GLASS AS SPECIFIED.
C	1/4" TH. "CLEAR" ANNEALED GLASS AS SPECIFIED.

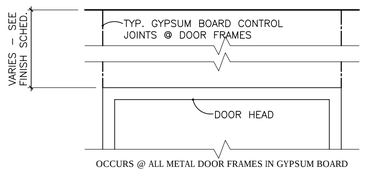

OCCURS @ ALL METAL DOOR FRAMES IN GYPSUM BOARD

SCHEDULE of INTERIOR SIGNAGE			
TYPE	DESCRIPTION OR TEXT	SIZE	LOCATION
1	NO. and CARD HOLDER	3 1/2" x Req'd. Length	Adjacent to Door "103"
1	NO. and CARD HOLDER	3 1/2" x Req'd. Length	Adjacent to Door "104"
1	NO. and CARD HOLDER	3 1/2" x Req'd. Length	Adjacent to Door "105"
2	TOILET	8" x 8"	Adjacent to Doors "108","113" and "126"
2	SHOWER	8" x 8"	Adjacent to Door "125" and "127"
3	APPARATUS ROOM	3" x Req'd. Length	Adjacent to Door "115A" and "122B"
3	MECHANICAL	3" x Req'd. Length	Adjacent to Door "121"
3	CUSTODIAL	3" x Req'd. Length	Adjacent to Door "116"
3	GENERAL STORAGE	3" x Req'd. Length	Adjacent to Door "128"
3	CLASSROOM/TRAINING	3" x Req'd. Length	Adjacent to Door "101"
3	BUNK ONE	3" x Req'd. Length	Adjacent to Door "117"
3	BUNK TWO	3" x Req'd. Length	Adjacent to Door "118"
3	BUNK THREE	3" x Req'd. Length	Adjacent to Door "119"
3	BUNK FOUR	3" x Req'd. Length	Adjacent to Door "120"
3	BUNK FIVE	3" x Req'd. Length	Adjacent to Door "123"
3	BUNK SIX	3" x Req'd. Length	Adjacent to Door "124"
3	LAUNDRY	3" x Req'd. Length	Adjacent to Door "130"
3	SCBA WORKROOM	3" x Req'd. Length	Adjacent to Door "131"
3	EMS STORAGE	3" x Req'd. Length	Adjacent to Door "132"
3	TURN–OUT GEAR	3" x Req'd. Length	Adjacent to Door "133A"

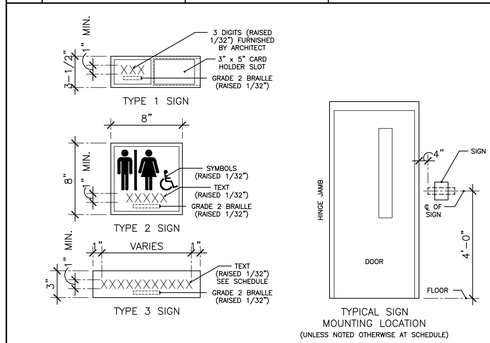

STATE OF ALABAMA — THOMAS M. McELRATH 3072 — GADSDEN, ALABAMA — REGISTERED ARCHITECT

THOMAS M. McELRATH, ARCHITECT
ARCHITECTURE and SPACE PLANNING
717 MERIT SPRINGS ROAD
GADSDEN, ALABAMA 35901
PHONE: (256) 490-8244
EMAIL: TOM@TMM-ARCHITECT.COM

A NEW FIRE STATION NO. 1
located at
3170 Highway 77
for the
City of Southside, Alabama

DOOR and WINDOW ELEVATIONS and SCHEDULES

DRAWN	TMM
CHECKED	TMM
SCALE	AS NOTED
DATE	NOVEMBER 15, 2021
FILE	A3.0thruA3.2_Sched.dwg
JOB NO.	21–01
REVISIONS	

SHEET A3.0 OF 17 SHEETS

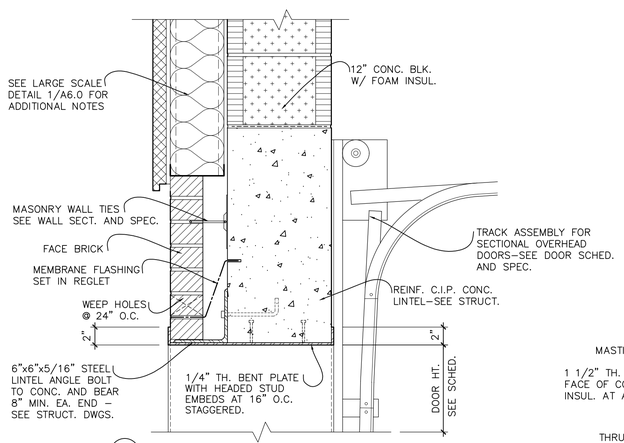

3 A3.1 HEAD at SECTIONAL O.H. DOOR

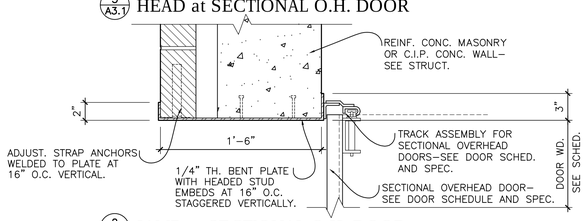

2 A3.1 JAMB at SECTIONAL O.H. DOOR

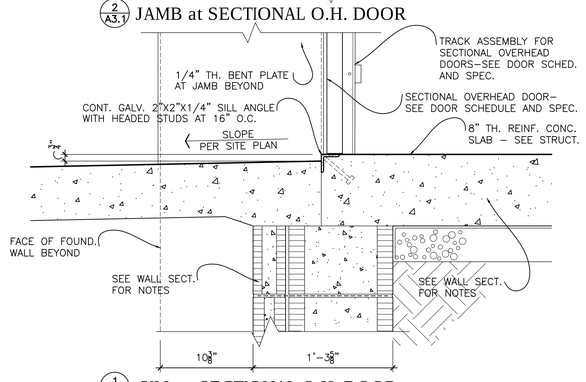

1 A3.1 SILL at SECTIONAL O.H. DOOR

FRAME DETAILS at SECTIONAL OVERHEAD DOORS

SC: 1 1/2" = 1'–0" NOTE: COORD. W/ FLOOR PLAN & SCHED. FOR FIRE RATED MAT'L

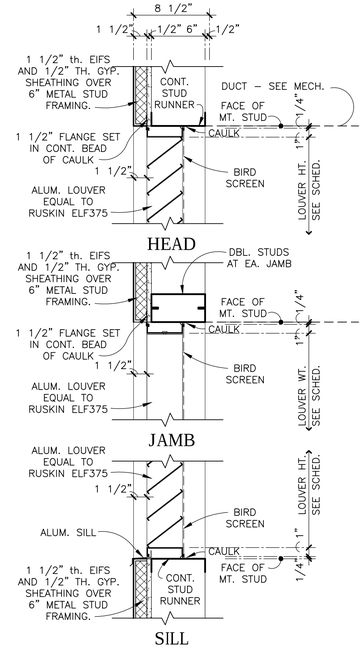

TYPICAL SECTION thru MECHANICAL LOUVER at E.I.F.S.

SCALE: 1–1/2" = 1'–0"

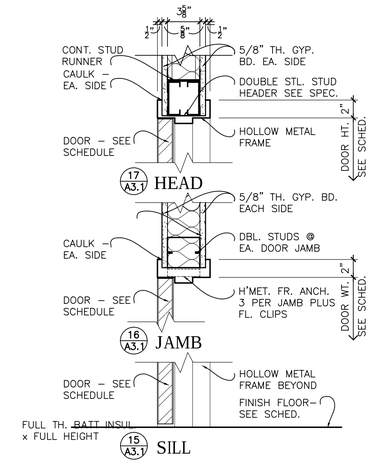

FRAME DETAILS for DOOR FRAMES in METAL STUDS w/ DRYWALL

SC.: 1 1/2" = 1'–0" NOTE: COORD. W/ FLOOR PLAN & SCHED. FOR FIRE RATED MAT'L

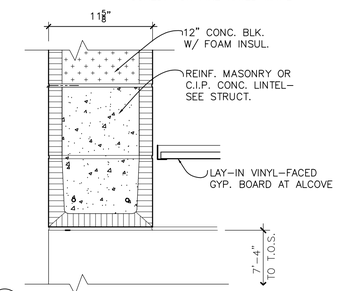

14 A3.1 BULKHEAD at DOOR 122B ALCOVE

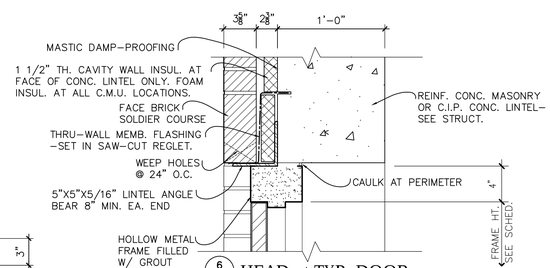

6 A3.1 HEAD at TYP. DOOR

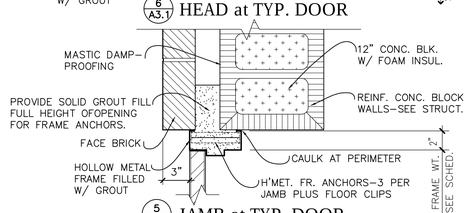

5 A3.1 JAMB at TYP. DOOR

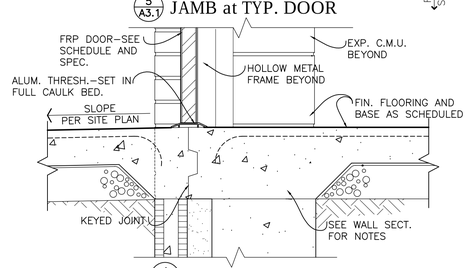

4 A3.1 THRESHOLD at TYP. DOOR

FRAME DETAILS at 18" FACE BRICK/C.M.U. WALLS

SC: 1 1/2" = 1'–0" NOTE: COORD. W/ FLOOR PLAN & SCHED. FOR FIRE RATED MAT'L

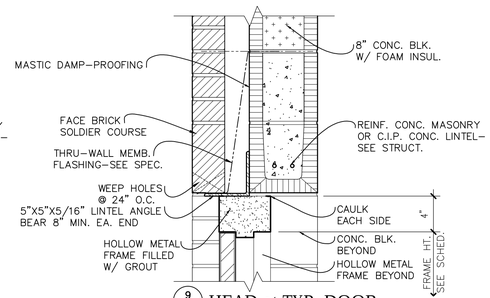

9 A3.1 HEAD at TYP. DOOR

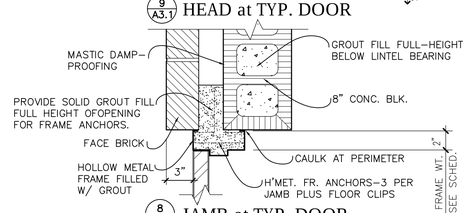

8 A3.1 JAMB at TYP. DOOR

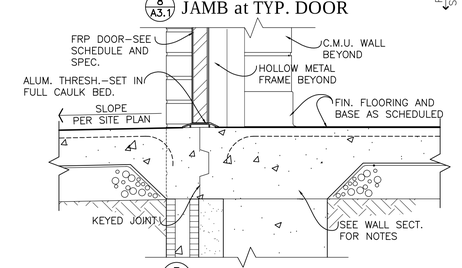

7 A3.1 THRESHOLD at TYP. DOOR

FRAME DETAILS at 14" FACE BRICK/C.M.U. WALLS

SC: 1 1/2" = 1'–0" NOTE: COORD. W/ FLOOR PLAN & SCHED. FOR FIRE RATED MAT'L

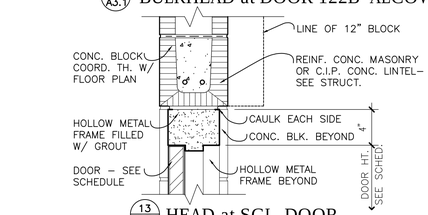

13 A3.3 HEAD at SGL. DOOR

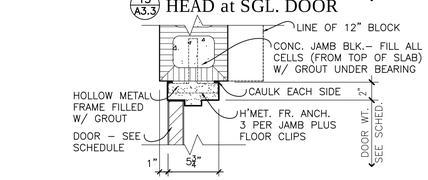

12 A3.3 JAMB at TYP. DOOR

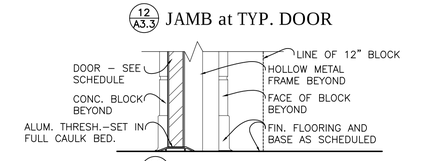

11 A3.1 SILL w/ THRESHOLD

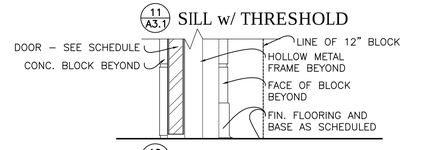

10 A3.3 SILL w/o THRESHOLD

FRAME DETAILS at 8" or 12" EXPOSED INTERIOR C.M.U. WALLS

SCALE: 1 1/2" = 1'–0" NOTE: COORD. W/ FLOOR PLAN & SCHED. FOR FIRE RATED MAT'L

STATE OF ALABAMA
THOMAS M. McELRATH
3072
GADSDEN, ALABAMA
REGISTERED ARCHITECT

THOMAS M. McELRATH, ARCHITECT
ARCHITECTURE and SPACE PLANNING
717 MERIT SPRINGS ROAD
GADSDEN, ALABAMA 35901
PHONE: (256) 490-8244
EMAIL: TOM@TMM-ARCHITECT.COM

A NEW FIRE STATION NO. 1
located at
3170 Highway 77
for the
City of Southside, Alabama

DOOR and WINDOW DETAILS

SHEET ONE

DRAWN	TMM
CHECKED	TMM
SCALE	AS NOTED
DATE	NOVEMBER 15, 2021
FILE	A3.0thruA3.2_Sched.dwg
JOB NO.	21–01
REVISIONS	

SHEET A3.1 OF 17 SHEETS

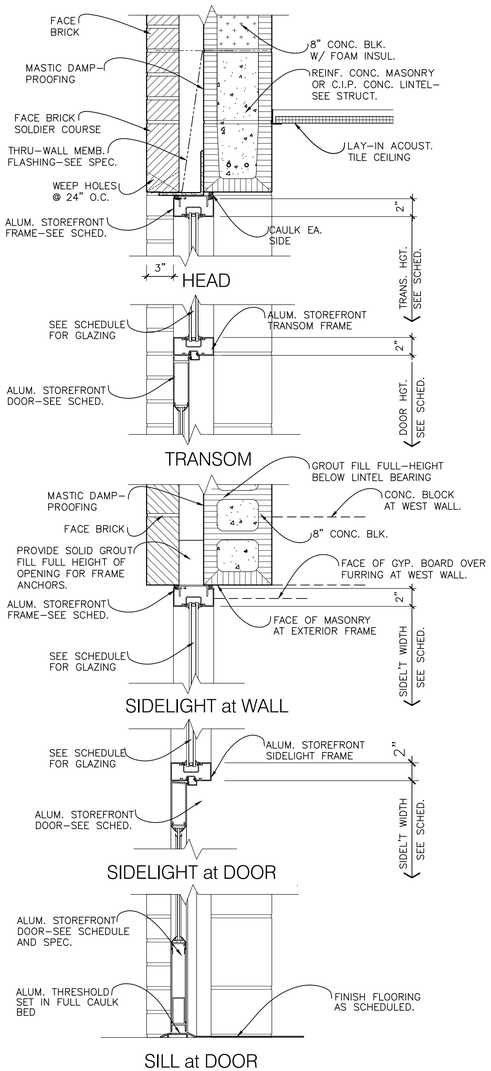

1 A3.2 SECTION thru EXTERIOR ALUM. STOREFRONT ENTRANCE FRAME

SC: 1 1/2" = 1'-0"

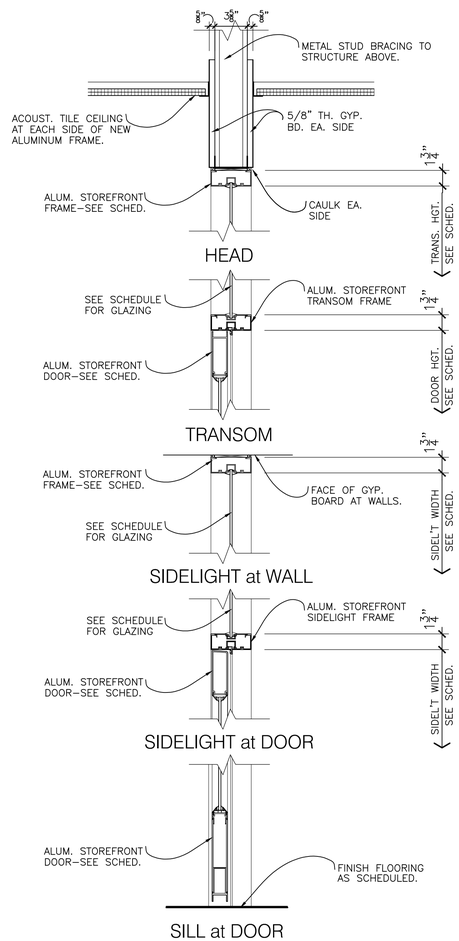

2 A3.2 SECTION thru INTERIOR ALUM. STOREFRONT ENTRANCE FRAME

SC: 1 1/2" = 1'-0"

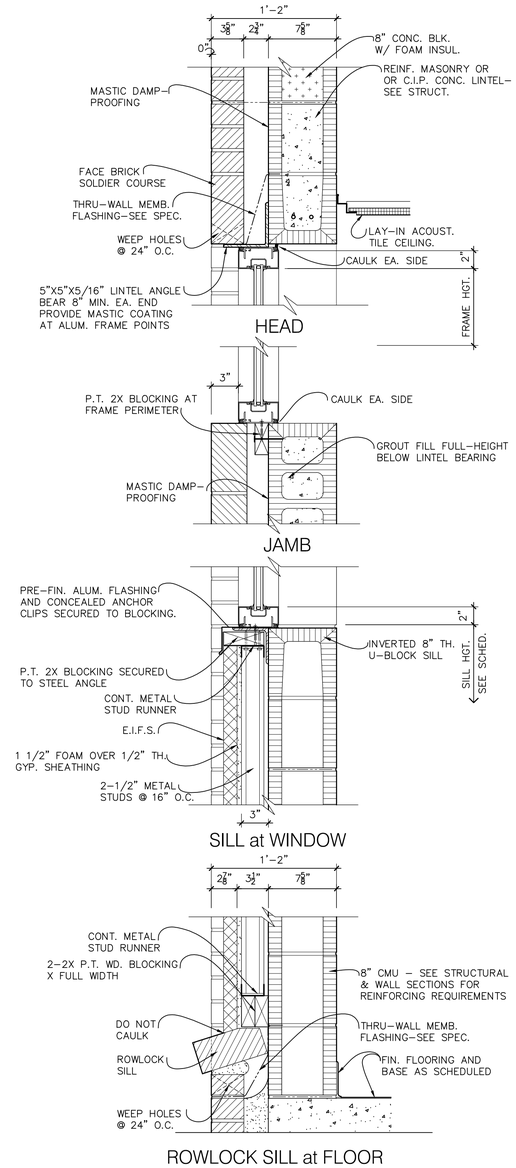

3 A3.2 SECTION thru ALUMINUM STOREFRONT WINDOWS

SC: 1 1/2" = 1'-0"

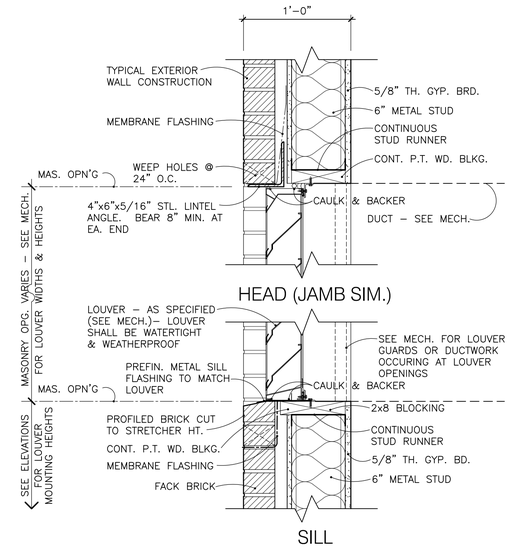

TYPICAL SECTION thru LOUVER in EXTERIOR METAL STUD WALL

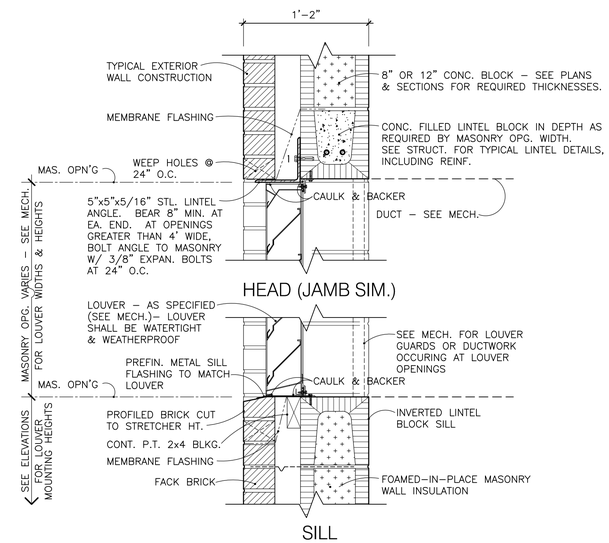

TYPICAL SECTION thru LOUVER in EXTERIOR MASONRY WALL

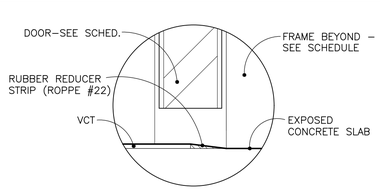

LVT TO EXPOSED CONCRETE

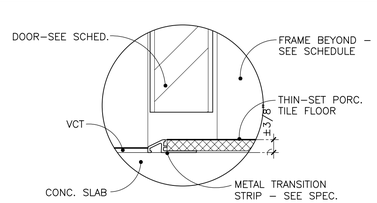

LVT TO PORCELAIN TILE

TYPICAL FINISH FLOORING TRANSITION DETAILS

SC: 6" = 1'-0"

STATE OF ALABAMA
THOMAS M. McELRATH 3072
GADSDEN, ALABAMA
REGISTERED ARCHITECT

THOMAS M. McELRATH, ARCHITECT
ARCHITECTURE and SPACE PLANNING
717 MERIT SPRINGS ROAD
GADSDEN, ALABAMA 35901
PHONE: (256) 490-8244
EMAIL: TOM@TMM-ARCHITECT.COM

A NEW FIRE STATION NO. 1
located at
3170 Highway 77
for the
City of Southside, Alabama

DOOR and WINDOW DETAILS

SHEET TWO

DRAWN	TMM
CHECKED	TMM
SCALE	AS NOTED
DATE	NOVEMBER 15, 2021
FILE	A3.0thruA3.2_Sched.dwg
JOB NO.	21-01
REVISIONS	

SHEET A3.2 OF 17 SHEETS

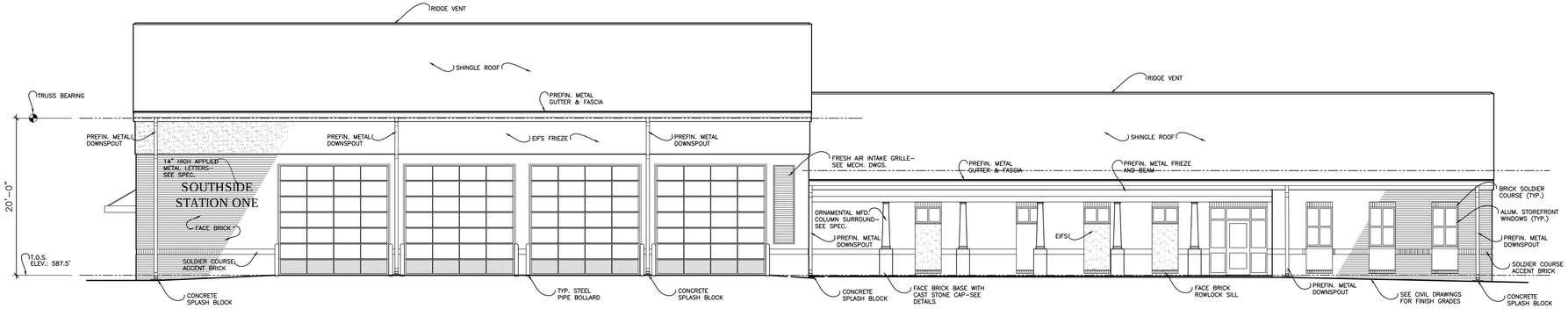

EAST (FRONT) ELEVATION

SCALE: 1/8" = 1'-0"

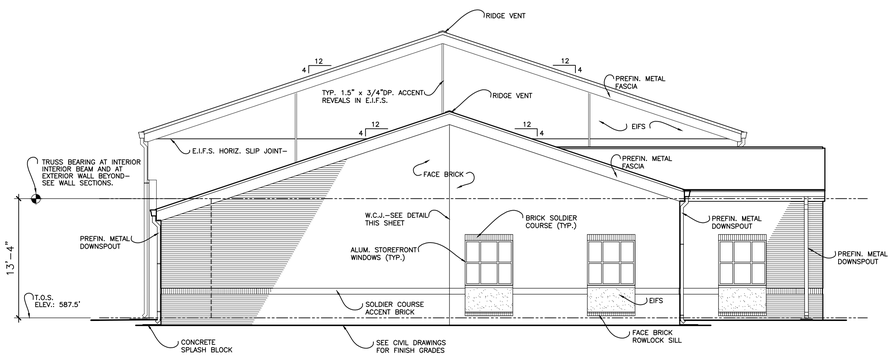

NORTH (RIGHT SIDE) ELEVATION

SCALE: 1/8" = 1'-0"

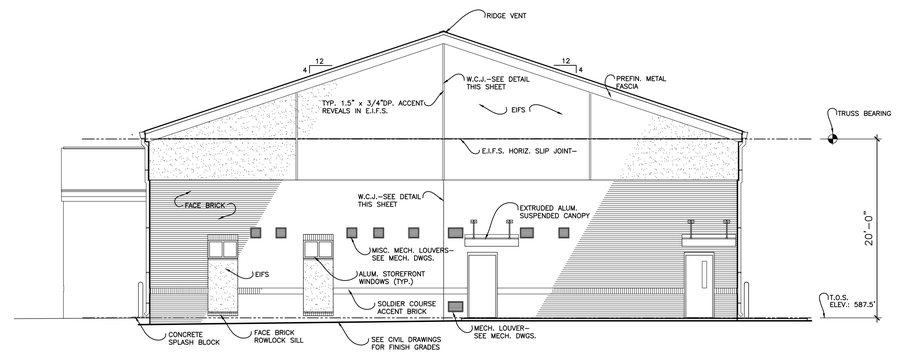

SOUTH (LEFT SIDE) ELEVATION

SCALE: 1/8" = 1'-0"

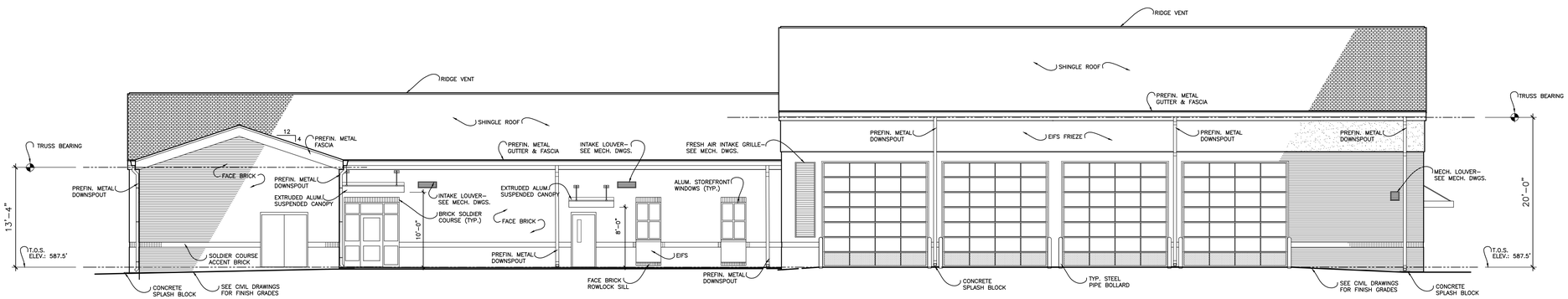

WEST (REAR) ELEVATION

SCALE: 1/8" = 1'-0"

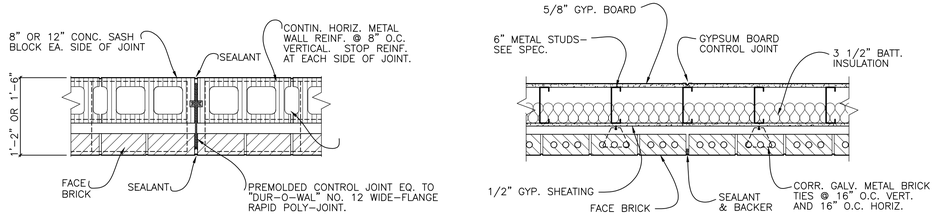

TYPICAL WALL CONTROL JOINT DETAILS

SC: 1"=1'-0"

MECHANICAL LOUVER NOTE:

SEE MECHANICAL LOUVER DETAILS ON SHEETS A3.1 AND A3.2 FOR REQUIREMENTS AT MECHANICAL LOUVERS/GRILLES SHOWN ON THIS SHEET.

FOOTING ELEVATION NOTE:

SEE STRUCTURAL DRAWINGS FOR ELEVATIONS OF ALL FOOTINGS AT BOTH INTERIOR AND EXTERIOR WALLS.

STATE OF ALABAMA
THOMAS M. McELRATH
3072
GADSDEN, ALABAMA
REGISTERED ARCHITECT

THOMAS M. McELRATH, ARCHITECT
ARCHITECTURE and SPACE PLANNING
717 MERIT SPRINGS ROAD
GADSDEN, ALABAMA 35901
PHONE: (256) 490-8244
EMAIL: TOM@TMM-ARCHITECT.COM

A NEW FIRE STATION NO. 1
located at
3170 Highway 77
for the
City of Southside, Alabama

ELEVATIONS

DRAWN	TMM
CHECKED	TMM
SCALE	AS NOTED
DATE	NOVEMBER 15, 2021
FILE	A4.0 ELEVATIONS
JOB NO.	21-01
REVISIONS	

SHEET A4.0 OF 17 SHEETS

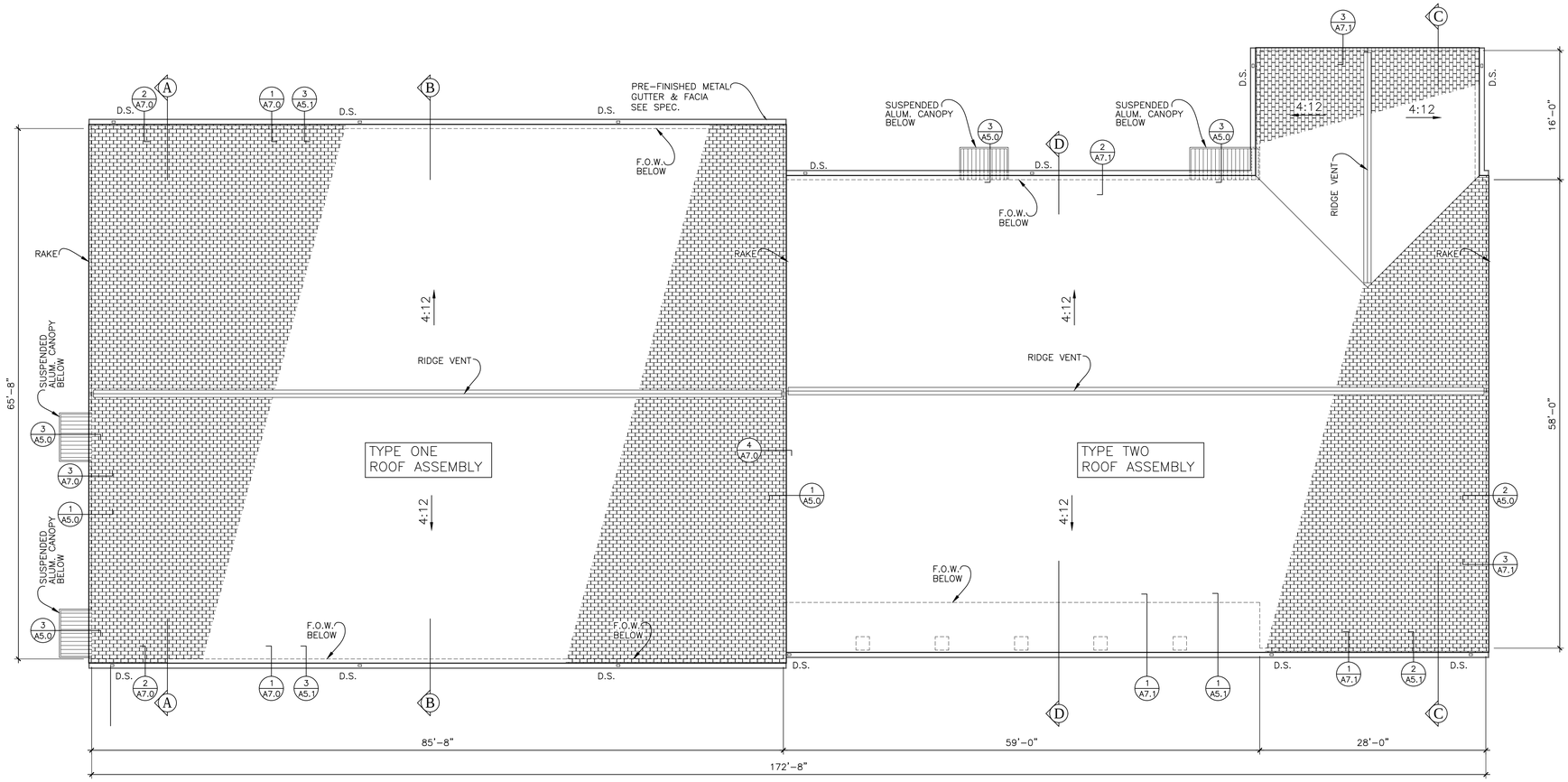

ARCHITECTURAL ROOF PLAN

SCALE: 1/8" = 1'-0"

ROOF ASSEMBLIES:

ROOF ASSEMBLY 'TYPE ONE':

ARCHITECTURAL COMPOSITION SHINGLES, OVER UNDERLAYMENT AS SPECIFIED OVER NOM. 6.625" THICK VENTED NAIL BASE INSULATION (R-20) OVER 1" DP. x 22 GA. FLUTED METAL DECK (SEE STRUCTURAL), OVER LIGHT GAUGE STEEL TRUSSES @ 48" O.C. (MAXIMUM).

ROOF ASSEMBLY 'TYPE TWO':

ARCHITECTURAL COMPOSITION SHINGLES, OVER UNDERLAYMENT AS SPECIFIED, OVER NOM. 3/4" TH. PLYWOOD DECKING, OVER 7/8" DP. METAL HAT SECTIONS (APPLIED PERPENDICULAR TO METAL DECK RIBS), OVER 1 1/2" x22 GA. TYPE "B" FLUTED METAL DECK (SEE STRUCT.), OVER LIGHT GAUGE STEEL TRUSSES AT 48" O.C. (MAXIMUM).

NOTE:

SEE PLUMBING AND MECHANICAL ROOF PLAN FOR ALL PLUMBING AND MECHANICAL ROOF PENETRATIONS AND DETAILS.

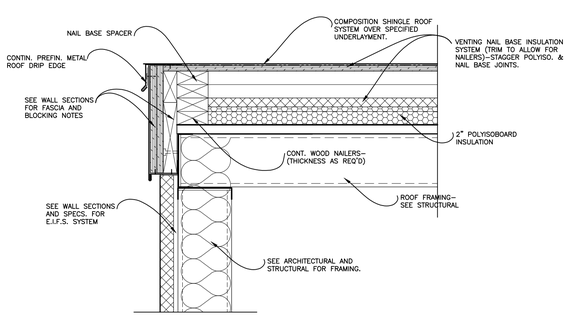

1 / A5.0 LARGE RAKE DETAIL for TYPE 1 ROOF

SCALE: 1 1/2" = 1'-0"

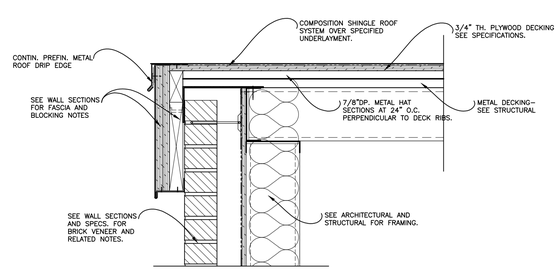

2 / A5.0 LARGE RAKE DETAIL for TYPE 2 ROOF

SCALE: 1 1/2" = 1'-0"

SEE TYP. WALL SECTIONS FOR CONDITIONS @ CANOPY LOCATIONS. PROVIDE SUPPLEMENTAL FRAMING AS REQUIRED TO SECURE SUSPENDED ROD ANCHOR PLATE TO STRUCTURE.

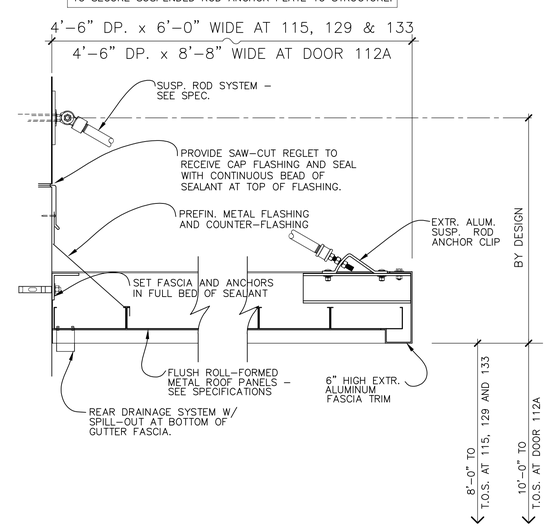

3 / A5.0 TYPICAL SUSPENDED CANOPY

SCALE: 1 1/2" = 1'-0" OCCURS AT DOORS 112A, 115, 129 AND 133

STATE OF ALABAMA
THOMAS M. McELRATH 3072
GADSDEN, ALABAMA
REGISTERED ARCHITECT

THOMAS M. McELRATH, ARCHITECT
ARCHITECTURE and SPACE PLANNING
717 MERIT SPRINGS ROAD
GADSDEN, ALABAMA 35901
PHONE: (256) 490-8244
EMAIL: TOM@TMM-ARCHITECT.COM

A NEW FIRE STATION NO. 1
located at
3170 Highway 77
for the
City of Southside, Alabama

ROOF PLAN SECTIONS & DETAILS

DRAWN	TMM
CHECKED	TMM
SCALE	AS NOTED
DATE	NOVEMBER 15, 2021
FILE	A5.0_Roof Plan.dwg
JOB NO.	21-01
REVISIONS	

SHEET A5.0 OF 17 SHEETS

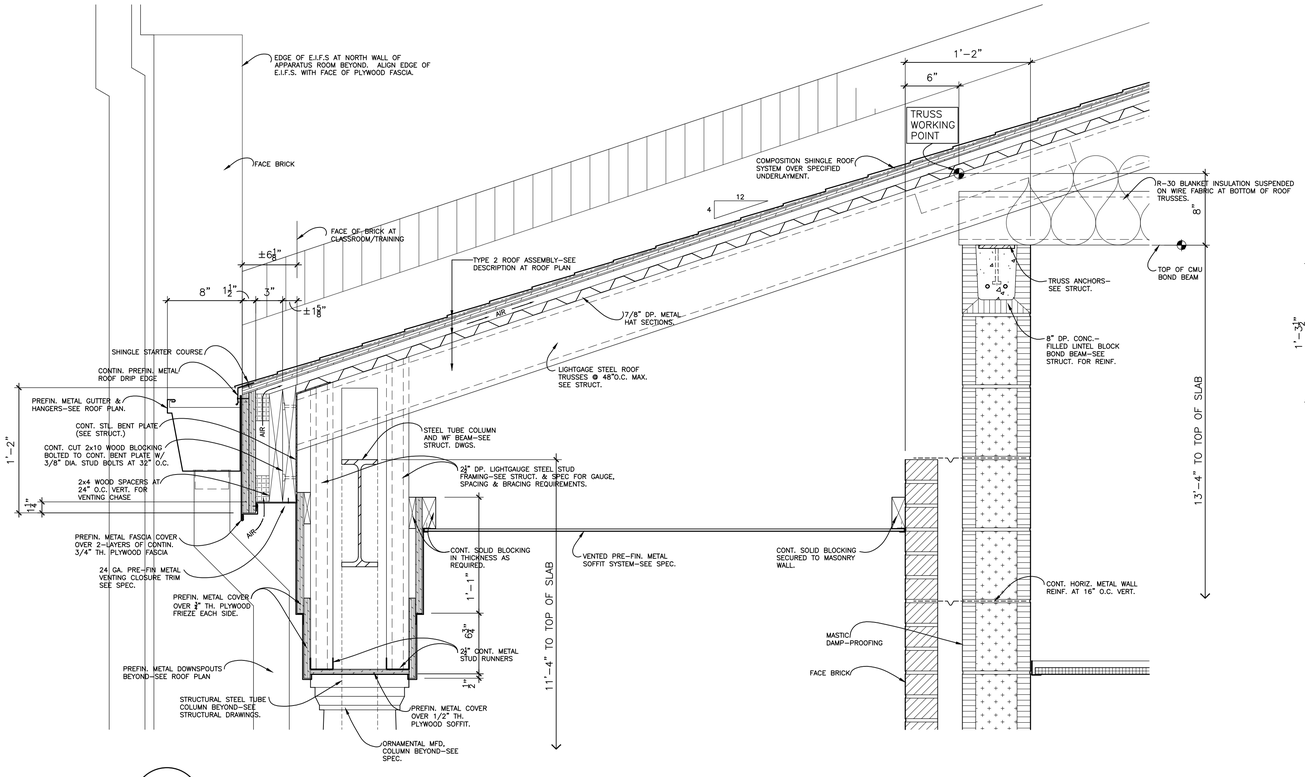

1 / A5.1 LARGE SCALE EAVE DETAIL at COVERED ARCADE

SCALE: 1 1/2" = 1'-0"

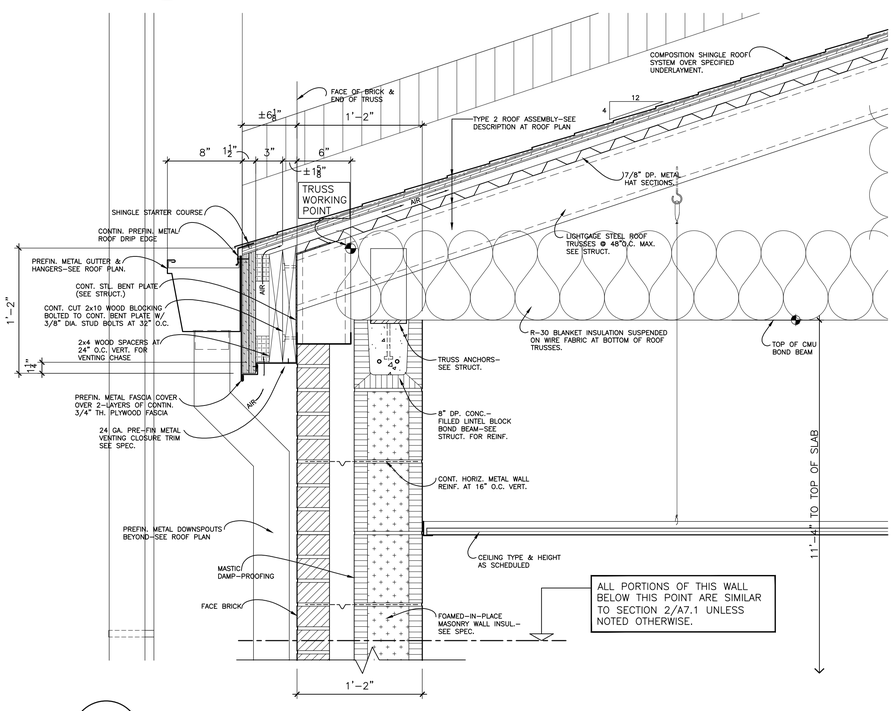

2 / A5.1 LARGE SCALE EAVE DETAIL at EAST WALL C/T ROOM 101

SCALE: 1 1/2" = 1'-0"

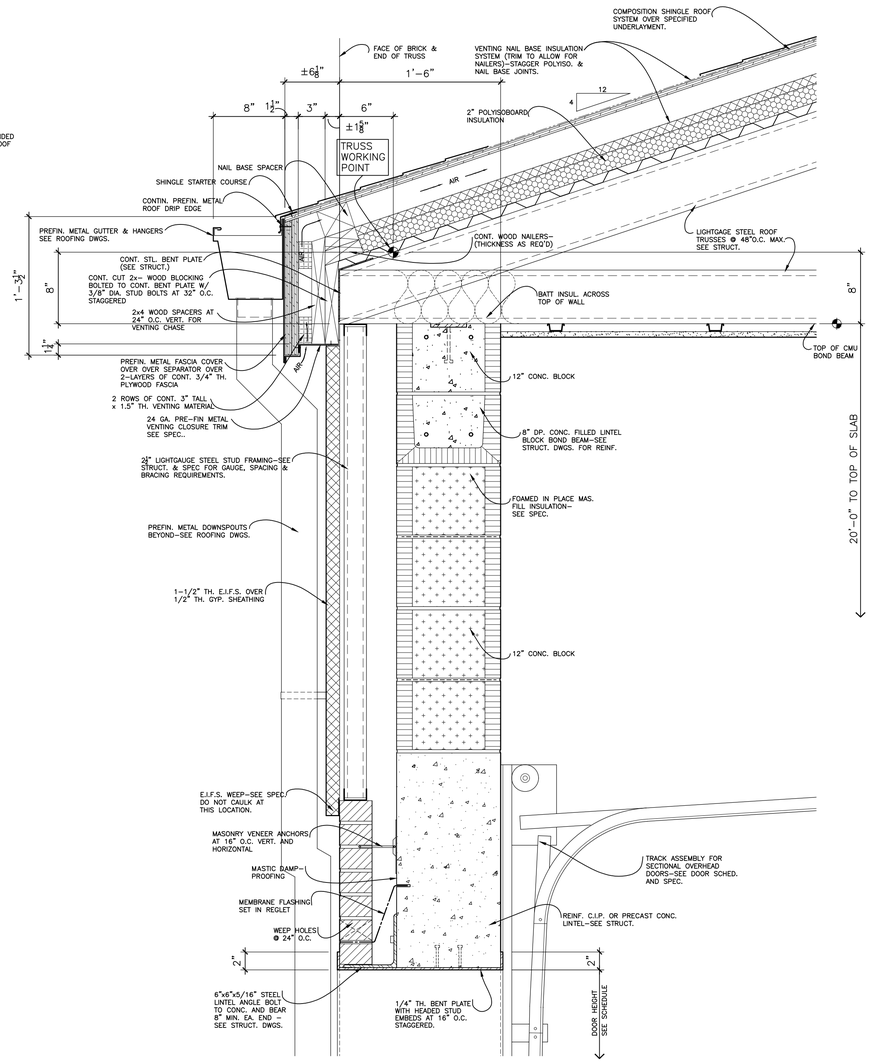

3 / A5.1 LARGE SCALE EAVE DETAIL at APPARATUS DOOR

SCALE: 1 1/2" = 1'-0"

ROOF ASSEMBLIES:

ROOF ASSEMBLY 'TYPE ONE':

ARCHITECTURAL COMPOSITION SHINGLES, OVER UNDERLAYMENT AS SPECIFIED OVER NOM. 6.625" THICK VENTED NAIL BASE INSULATION (R-20) OVER 1" DP. x 22 GA. FLUTED METAL DECK (SEE STRUCTURAL), OVER LIGHT GAUGE STEEL TRUSSES @ 48" O.C. (MAXIMUM).

ROOF ASSEMBLY 'TYPE TWO':

ARCHITECTURAL COMPOSITION SHINGLES, OVER UNDERLAYMENT AS SPECIFIED, OVER NOM. 3/4" TH. PLYWOOD DECKING, OVER 7/8" DP. METAL HAT SECTIONS (APPLIED PERPENDICULAR TO METAL DECK RIBS), OVER 1 1/2" x22 GA. TYPE "B" FLUTED METAL DECK (SEE STRUCT.), OVER LIGHT GAUGE STEEL TRUSSES AT 48" O.C. (MAXIMUM).

STATE OF ALABAMA
THOMAS M. McELRATH
3072
GADSDEN, ALABAMA
REGISTERED ARCHITECT

THOMAS M. McELRATH, ARCHITECT
ARCHITECTURE and SPACE PLANNING
717 MERIT SPRINGS ROAD
GADSDEN, ALABAMA 35901
PHONE: (256) 490-8244
EMAIL: TOM@TMM-ARCHITECT.COM

A NEW FIRE STATION NO. 1
located at
3170 Highway 77
for the
City of Southside, Alabama

SECTIONS & DETAILS

DRAWN	TMM
CHECKED	TMM
SCALE	AS NOTED
DATE	NOVEMBER 15, 2021
FILE	A5.1_Roof Details.dwg
JOB NO.	21-01
REVISIONS	

SHEET A5.1 OF 17 SHEETS

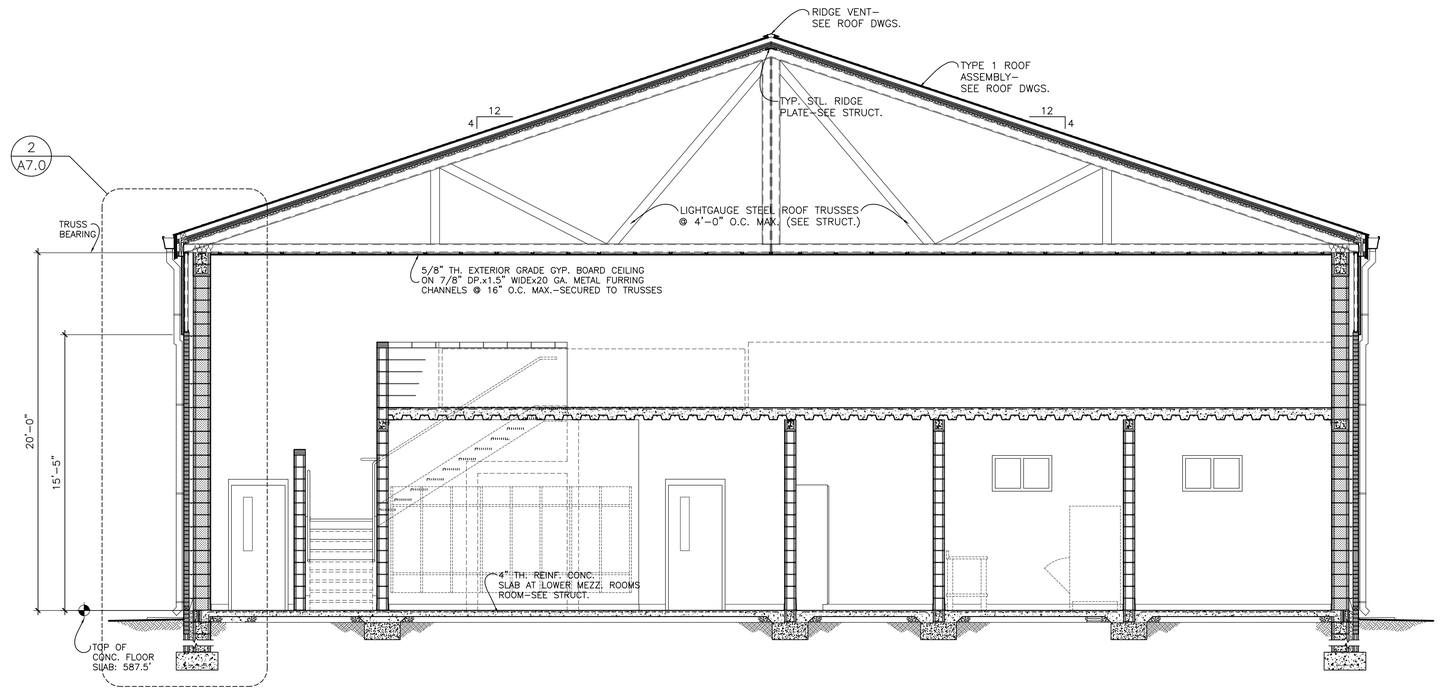

CROSS SECTION "A-A" through APPARATUS ROOM at MEZZANINE

SCALE: 1/4" = 1'-0"

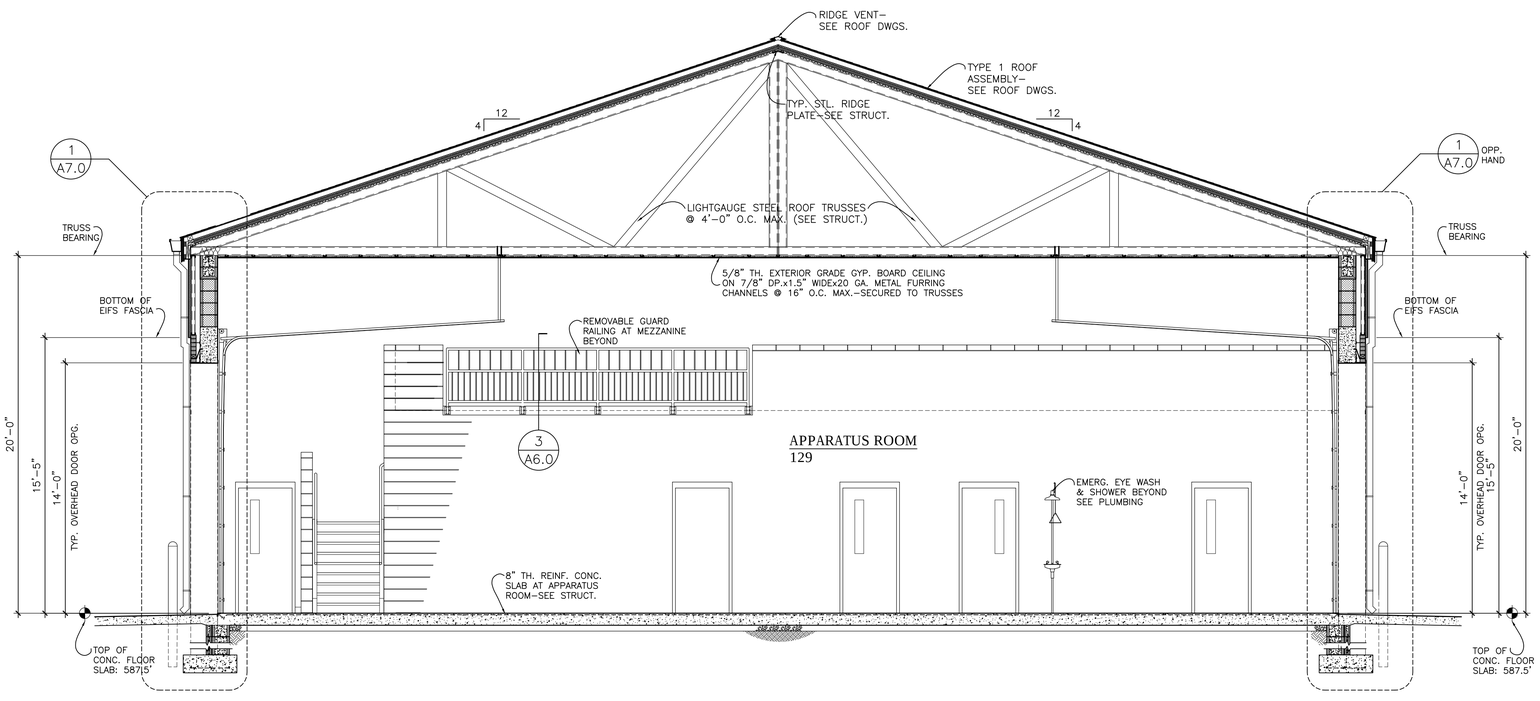

CROSS SECTION "B-B" through APPARATUS ROOM

SCALE: 1/4" = 1'-0"

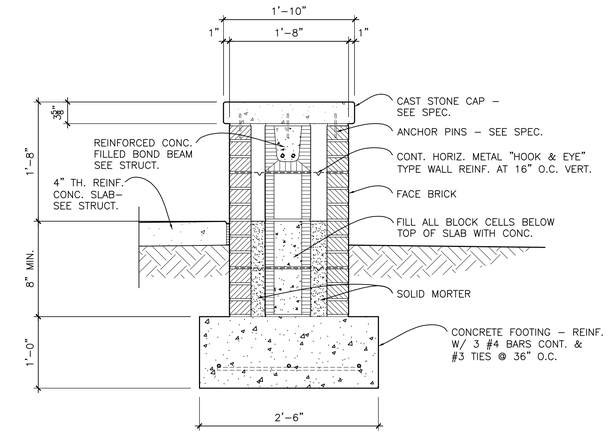

1 A6.0 TYP. SECTION at EXTERIOR PATIO BENCH WALL

SCALE: 1" = 1'-0"

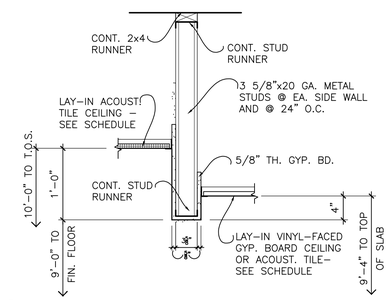

2 A6.0 GYP. BOARD BULKHEAD at CEILING TRANSITION

SCALE: 1" = 1'-0" (SEE FLOOR PLAN for BULKHEAD LOCATIONS)

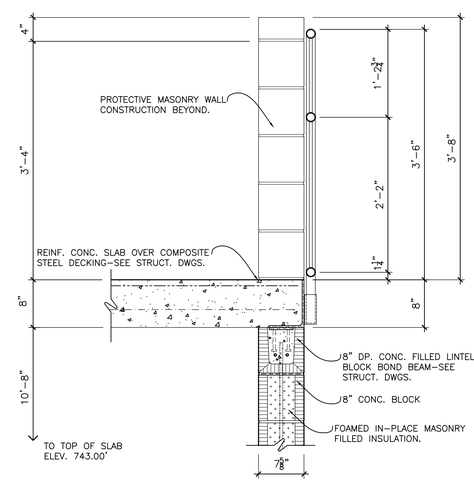

3 A6.0 SECTION thru REMOVABLE RAILING at MEZZANINE

SCALE: 1" = 1'-0"

STATE OF ALABAMA
THOMAS M. McELRATH
3072
GADSDEN, ALABAMA
REGISTERED ARCHITECT

THOMAS M. McELRATH, ARCHITECT
ARCHITECTURE and SPACE PLANNING
717 MERIT SPRINGS ROAD
GADSDEN, ALABAMA 35901
PHONE: (256) 490-8244
EMAIL: TOM@TMM-ARCHITECT.COM

A NEW FIRE STATION NO. 1
located at
3170 Highway 77
for the
City of Southside, Alabama

CROSS SECTION

SHEET ONE

DRAWN	TMM
CHECKED	TMM
SCALE	AS NOTED
DATE	NOVEMBER 15, 2021
FILE	A6.0–6.1CS.DWG
JOB NO.	21–01
REVISIONS	

SHEET A6.0 OF 17 SHEETS

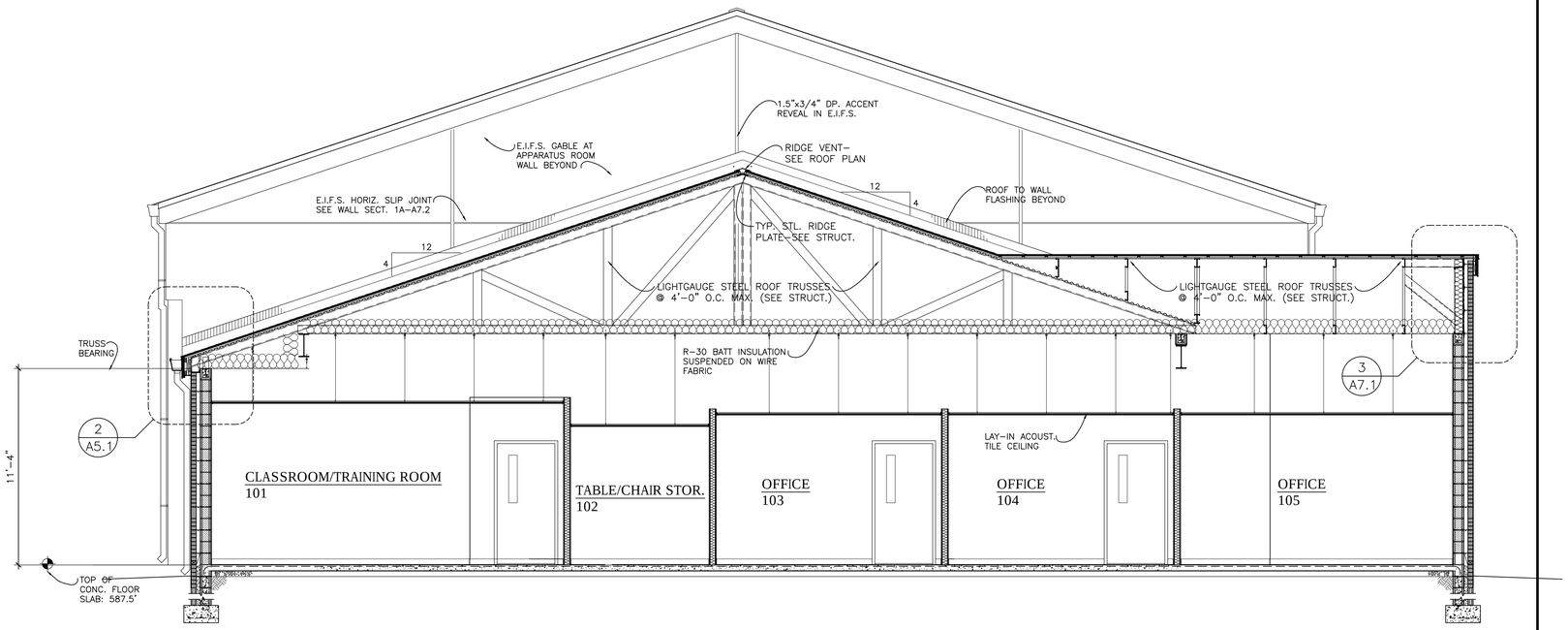

CROSS SECTION "C-C" through CLASSROOM/TRAINING and ADMINISTRATIVE AREAS

SCALE: 1/4" = 1'-0"

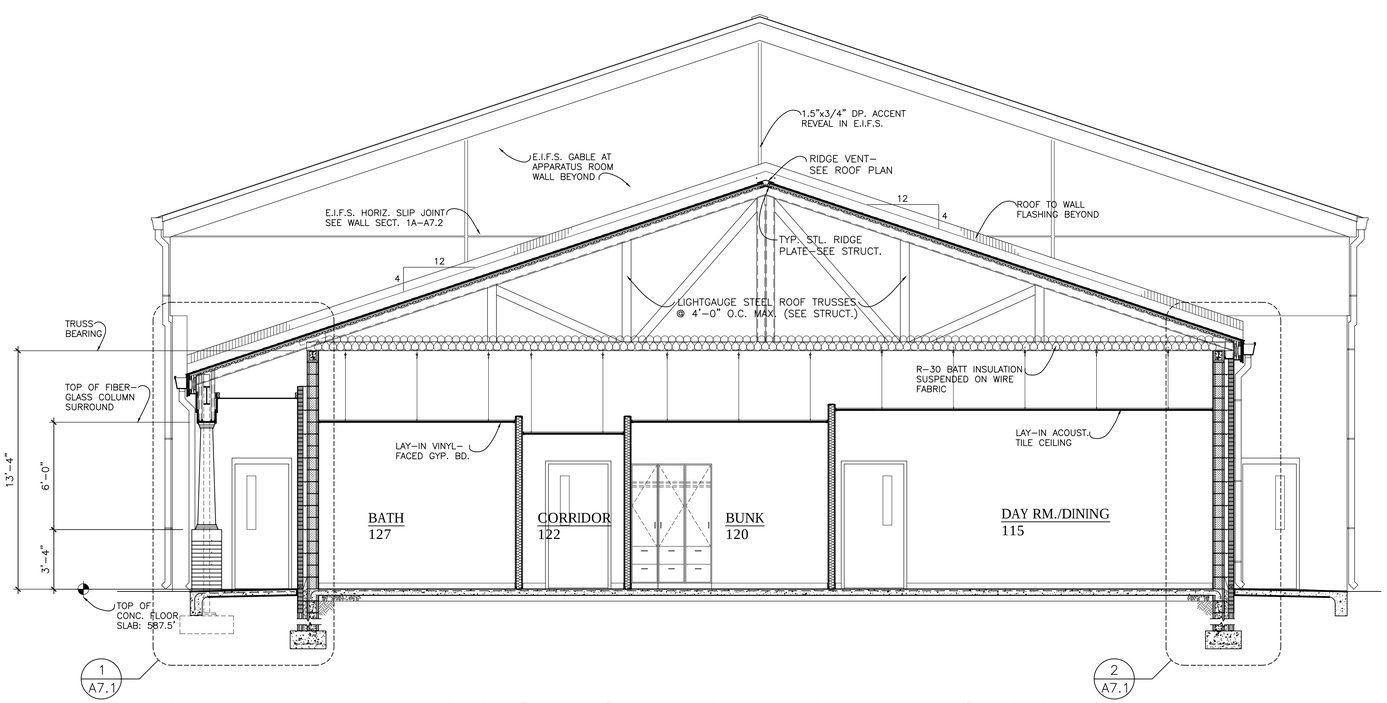

CROSS SECTION "D-D" through DAY ROOM/DINING and DORM.

SCALE: 1/4" = 1'-0"

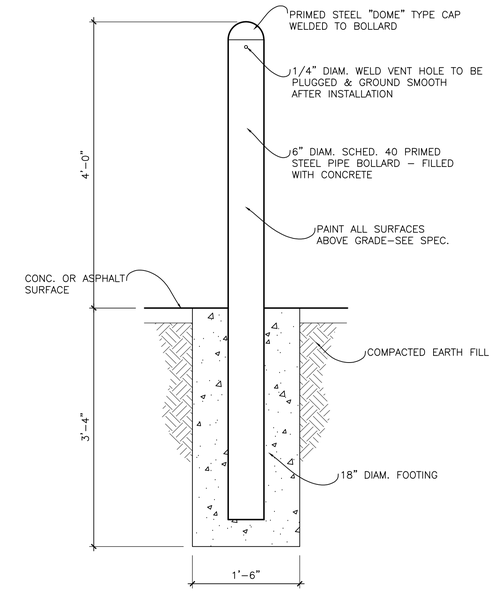

SECTION thru TYP. 6" DIAM. STEEL PIPE BOLLARD

SCALE: 1" = 1'-0" (DENOTED AS "P.B." - SEE FLOOR PLAN FOR LOCATIONS)

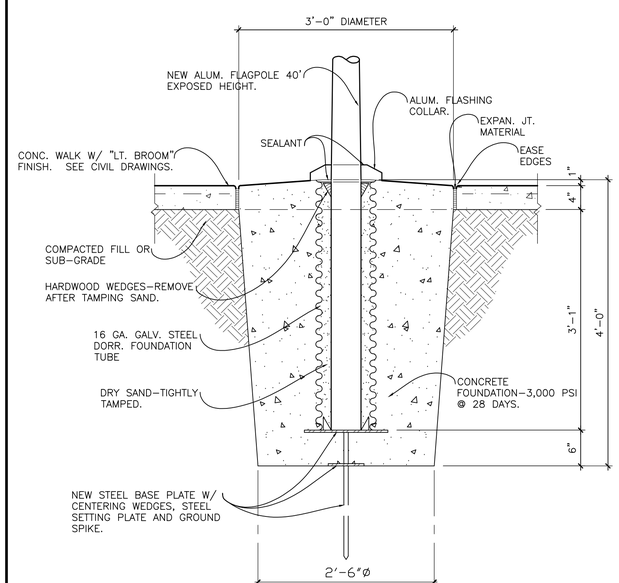

BASE DETAIL at FLAGPOLE

SCALE: 1" = 1'-0" (SEE CIVIL SITE PLAN for LOCATION)

STATE OF ALABAMA
THOMAS M. McELRATH
3072
GADSDEN, ALABAMA
REGISTERED ARCHITECT

THOMAS M. McELRATH, ARCHITECT
ARCHITECTURE and SPACE PLANNING
717 MERIT SPRINGS ROAD
GADSDEN, ALABAMA 35901
PHONE: (256) 490-8244
EMAIL: TOM@TMM-ARCHITECT.COM

A NEW FIRE STATION NO. 1
located at
3170 Highway 77
for the
City of Southside, Alabama

CROSS SECTION

SHEET TWO

DRAWN	TMM
CHECKED	TMM
SCALE	AS NOTED
DATE	NOVEMBER 15, 2021
FILE	A6.0–6.1CS.DWG
JOB NO.	21–01
REVISIONS	

SHEET A6.1 OF 17 SHEETS

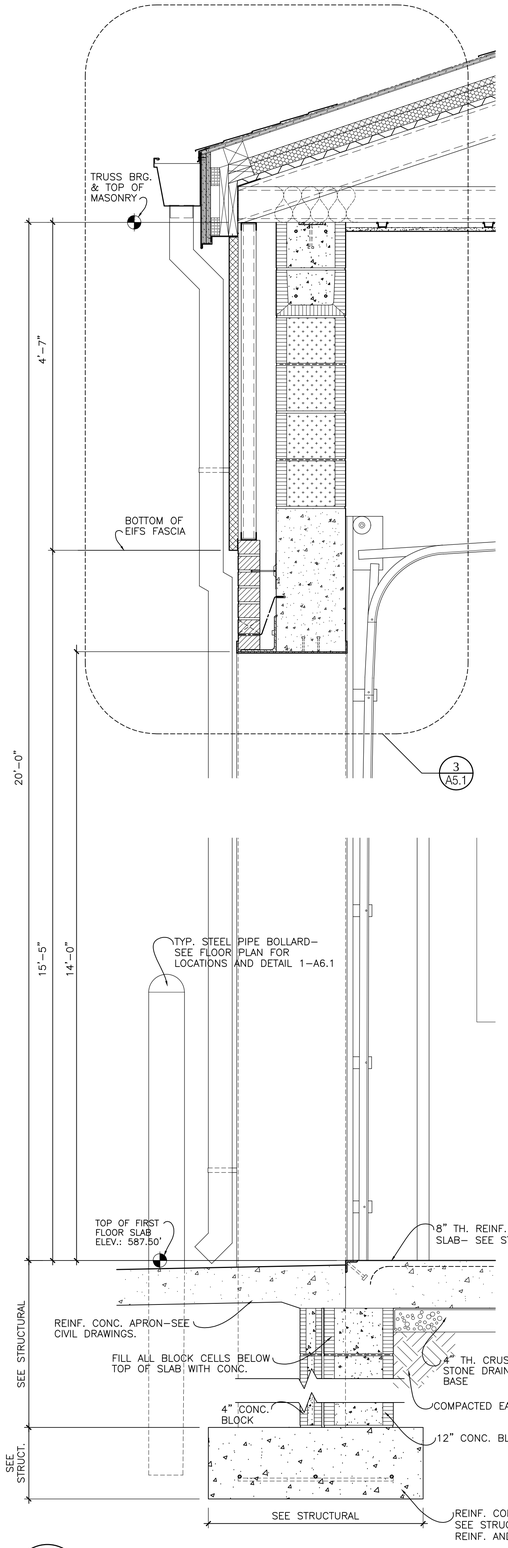

1 A7.0 SECTION at APPARATUS 129 O.H. DOOR
SCALE: 1" = 1'-0"

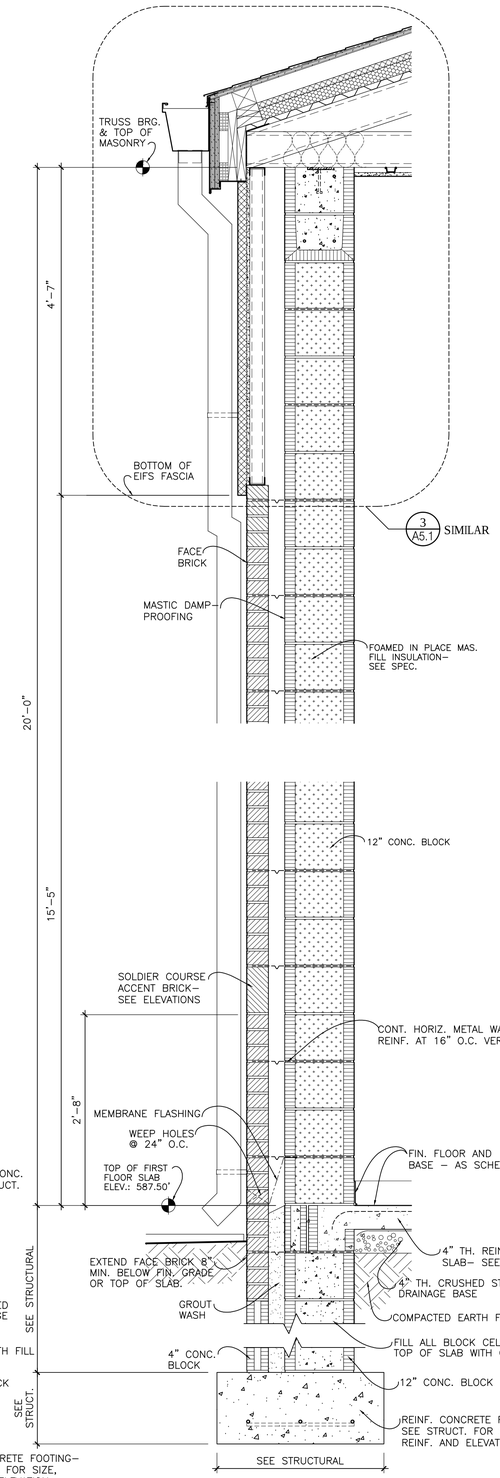

2 A7.0 SECT. at APP. 129 E. WALL
SCALE: 1" = 1'-0"

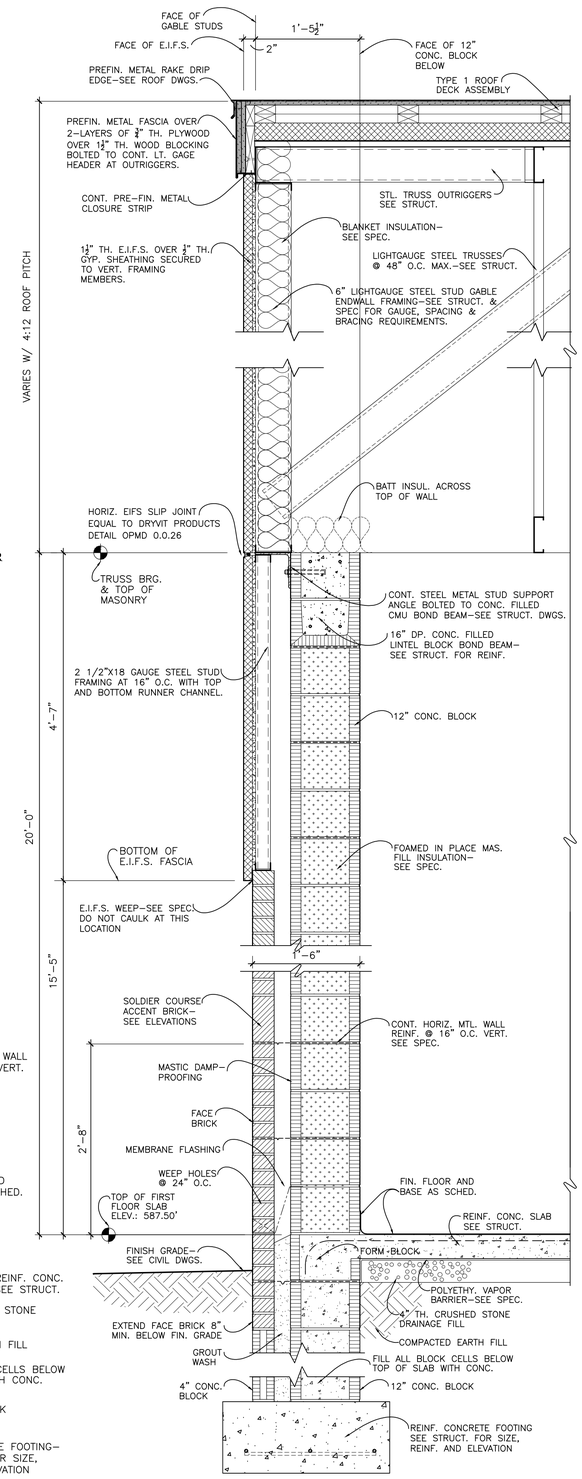

3 A7.0 SECT. at S. SIDE GABLE of APP. RM. 129
SCALE: 1" = 1'-0"

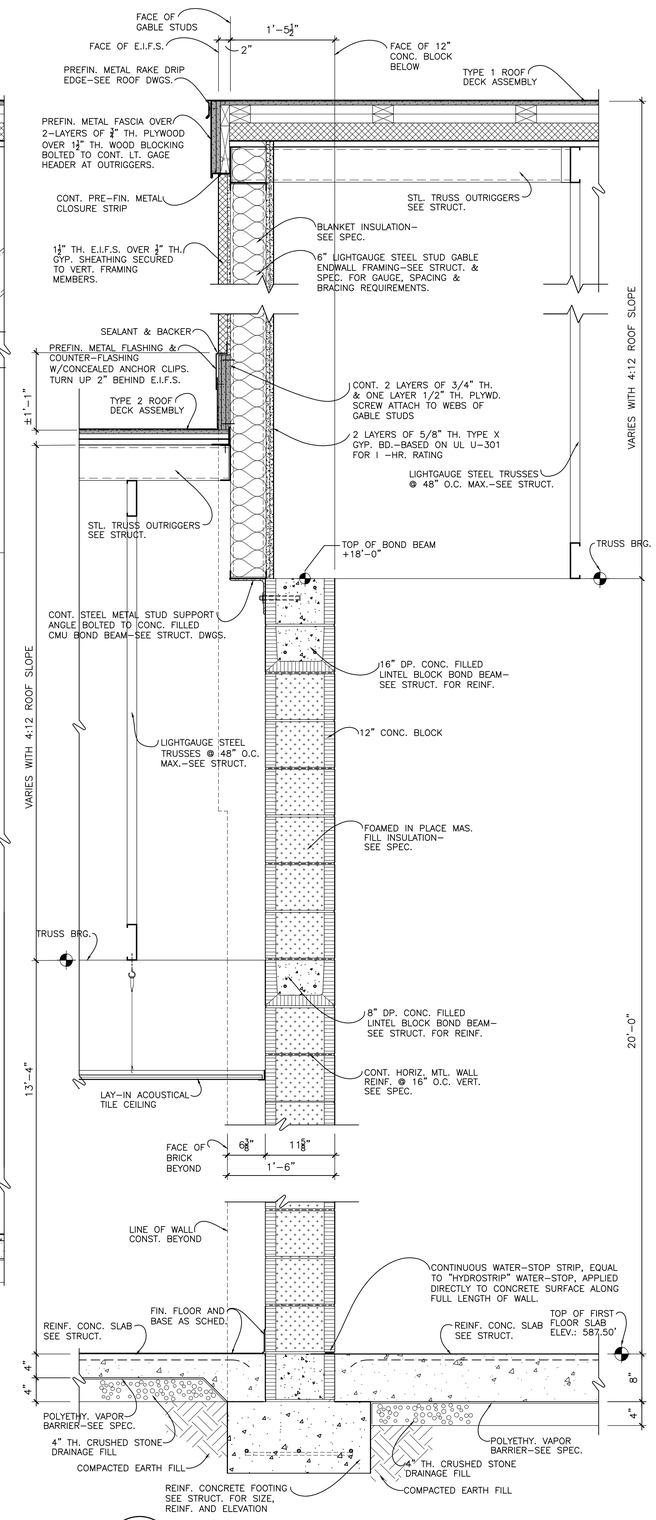

4 A7.0 GABLE END WALL at NORTH SIDE of APPARATUS ROOM 129
SCALE: 1" = 1'-0"

STATE OF ALABAMA
THOMAS M. McELRATH
3072
GADSDEN, ALABAMA
REGISTERED ARCHITECT

THOMAS M. McELRATH, ARCHITECT
ARCHITECTURE and SPACE PLANNING
717 MERIT SPRINGS ROAD
GADSDEN, ALABAMA 35901
PHONE: (256) 490-8244
EMAIL: TOM@TMM-ARCHITECT.COM

A NEW FIRE STATION NO. 1
located at
3170 Highway 77
for the
City of Southside, Alabama

WALL SECTIONS

SHEET ONE

DRAWN	TMM
CHECKED	TMM
SCALE	AS NOTED
DATE	NOVEMBER 15, 2021
FILE	A7.0 WALL SECTIONS
JOB NO.	21–01
REVISIONS	

SHEET A7.0 OF 17 SHEETS

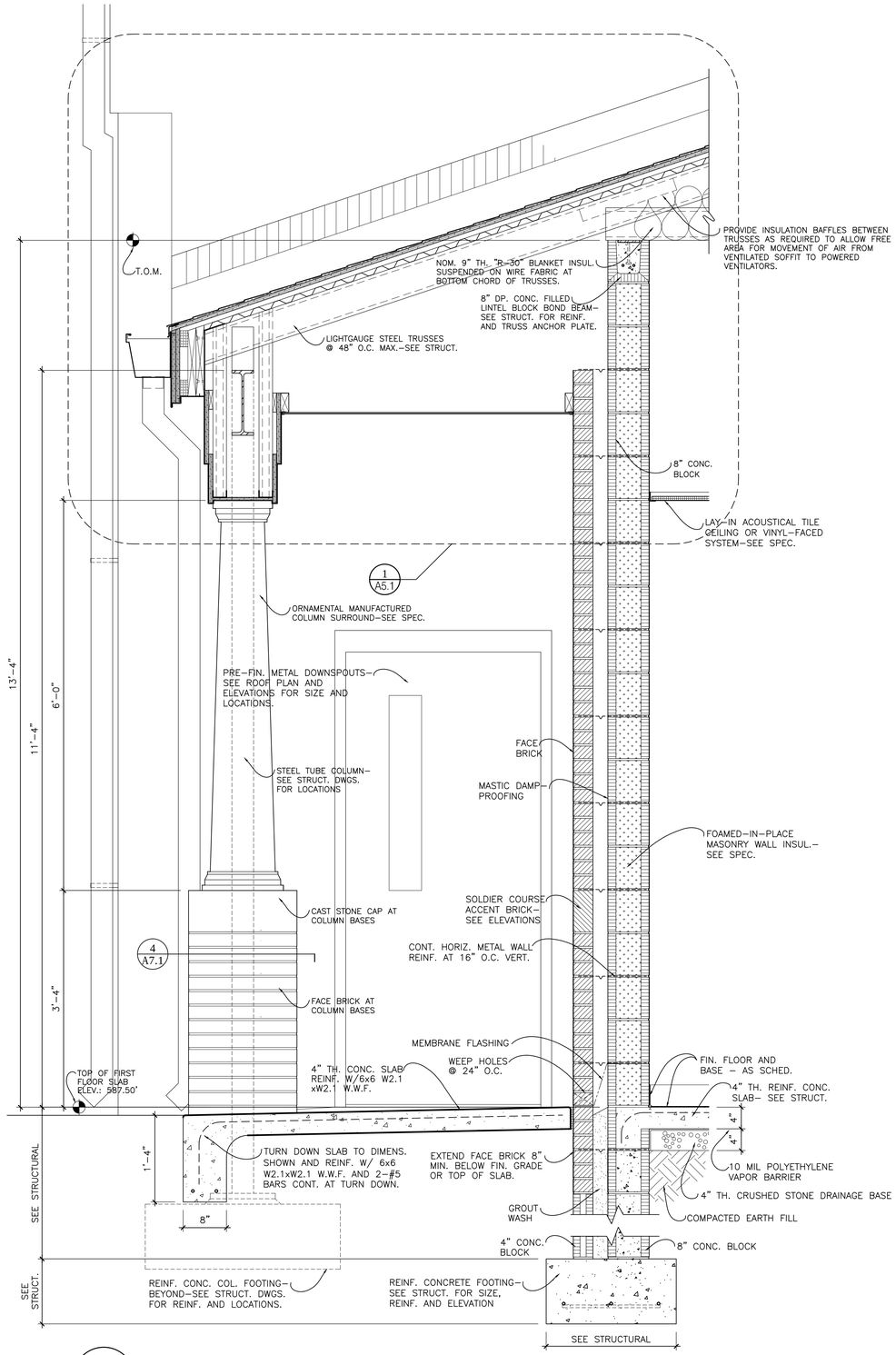

1 A7.1 SECTION at DORMITORY AREA BEARING WALL and ARCADE

SCALE: 1" = 1'-0"

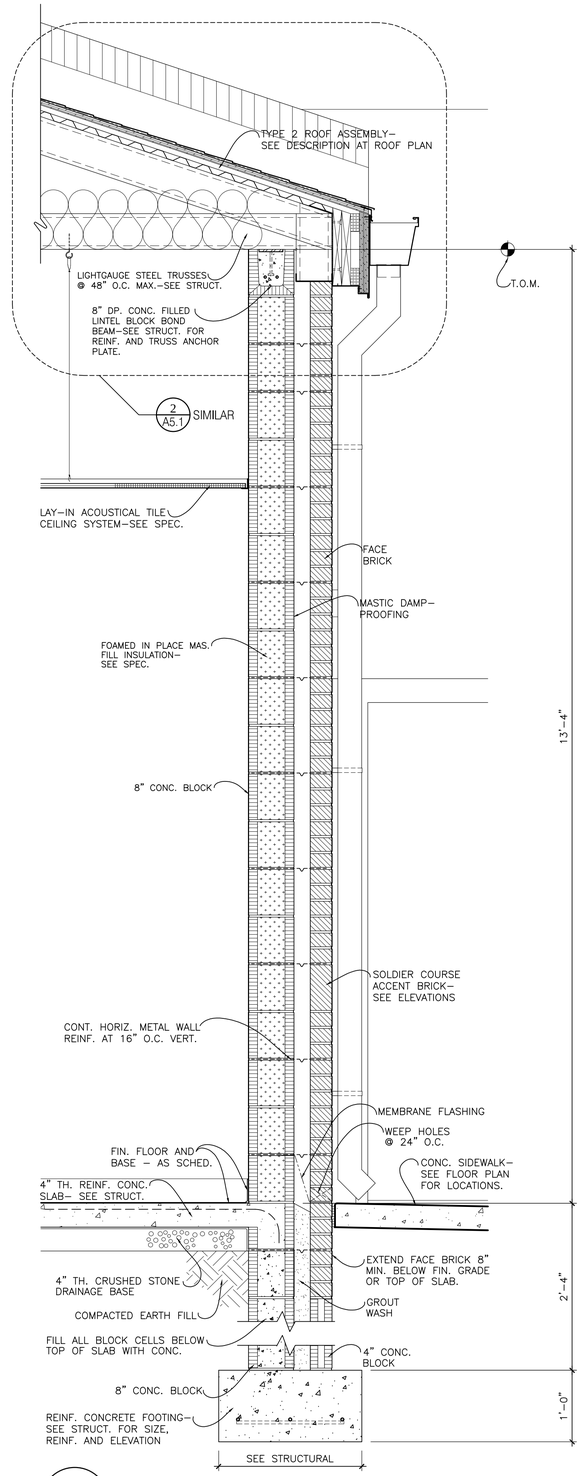

2 A7.1 SECTION at DAYROOM 115 BEARING WALL

SCALE: 1" = 1'-0"

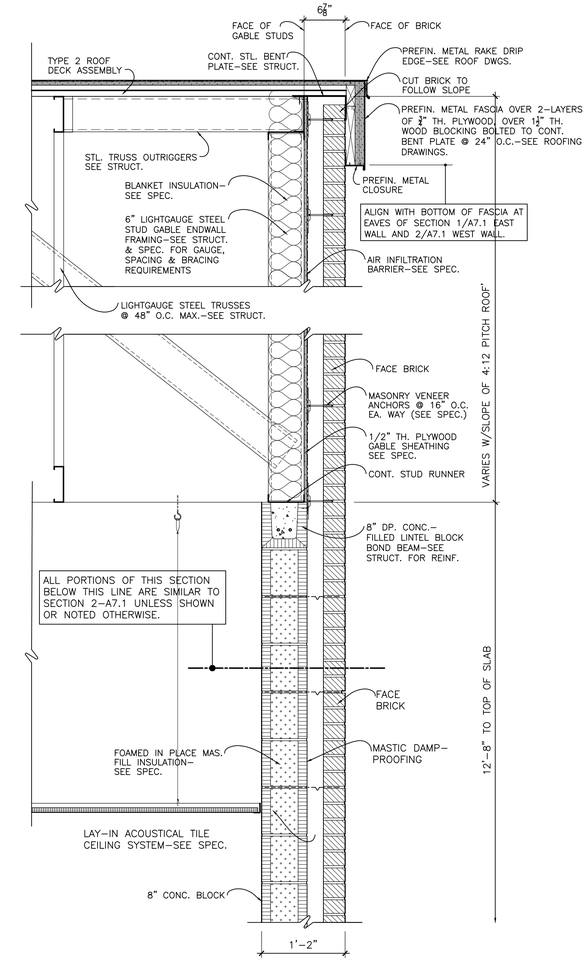

3 A7.1 TYPICAL GABLE END WALL with BRICK VENEER

SCALE: 1" = 1'-0"

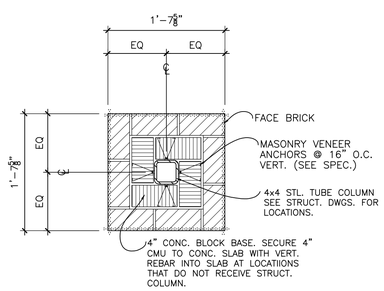

4 A7.1 PLAN SECTION THRU TYP. COLUMN PIER

SCALE: 1" = 1'-0"

STATE OF ALABAMA
THOMAS M. McELRATH
3072
GADSDEN, ALABAMA
REGISTERED ARCHITECT

THOMAS M. McELRATH, ARCHITECT
ARCHITECTURE and SPACE PLANNING
717 MERIT SPRINGS ROAD
GADSDEN, ALABAMA 35901
PHONE: (256) 490-8244
EMAIL: TOM@TMM-ARCHITECT.COM

A NEW FIRE STATION NO. 1
located at
3170 Highway 77
for the
City of Southside, Alabama

WALL SECTIONS

SHEET TWO

DRAWN	TMM
CHECKED	TMM
SCALE	AS NOTED
DATE	NOVEMBER 15, 2021
FILE	A7.1 WALL SECTIONS
JOB NO.	21-01
REVISIONS	

SHEET A7.1 OF 17 SHEETS

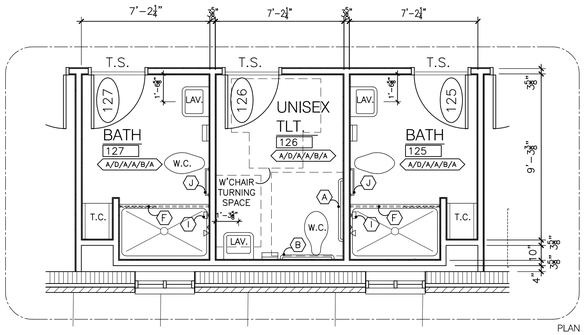

L.S. TOILET/BATH PLANS

SCALE: 1/4" = 1'-0"

PLAN NORTH

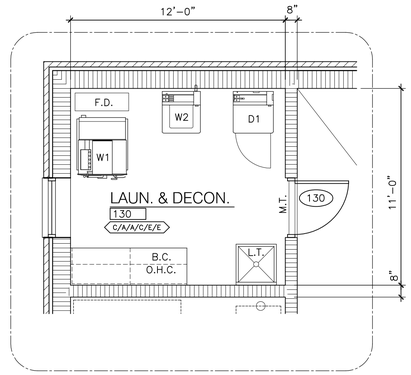

L.S. LAUN./DECON. PLAN

SCALE: 1/4" = 1'-0"

PLAN NORTH

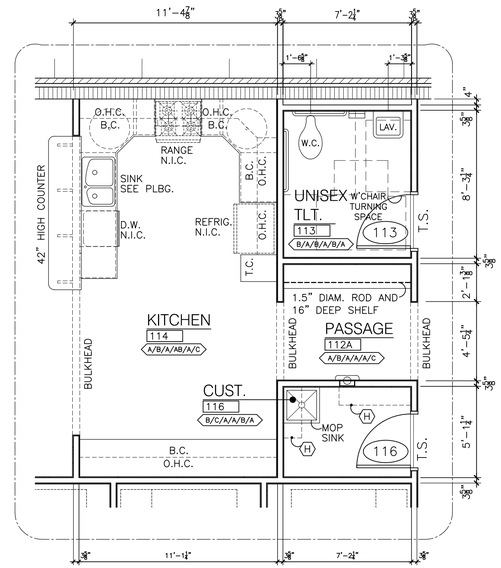

L.S. KITCHEN/CUSTODIAL and UNISEX TOILET PLANS

SCALE: 1/4" = 1'-0"

PLAN NORTH

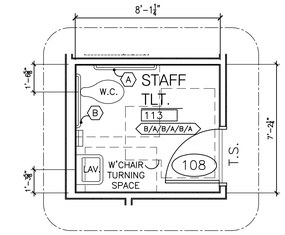

L.S. STAFF TOILET PLAN

SCALE: 1/4" = 1'-0"

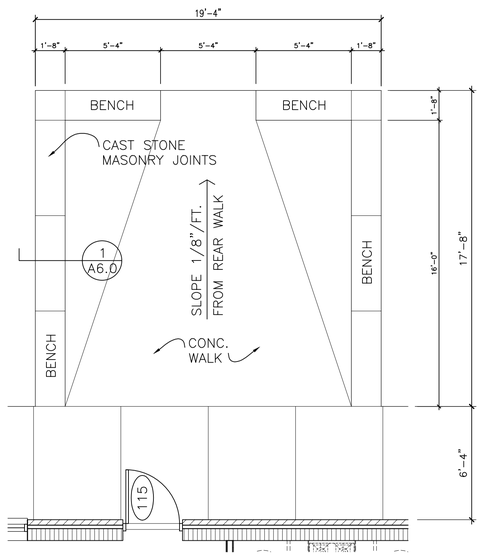

L.S. PATIO PLAN

SCALE: 1/4" = 1'-0"

PLAN NORTH

INTERIOR FINISH LEGEND

FLOOR (U/V/W/X/Y/Z)	
A	RESILIENT FLOOR TILE (LVT)
B	PORCELAIN TILE (THIN-SET)
C	EXPOSED CONCRETE WITH DUST-PROOF HARDENER

BASE (U/V/W/X/Y/Z)	
A	NONE
B	4" HIGH COVE RUBBER
C	15" HIGH THIN-SET PORCELAIN TILE

WAINSCOT (U/V/W/X/Y/Z)	
A	NONE
B	4'-3" HIGH THIN-SET PORCELAIN TILE

WALLS (U/V/W/X/Y/Z)	
A	GYPSUM BOARD WITH EGGSHELL ENAMEL PAINT
B	EXPOSED CONCRETE BLOCK WITH SEMI-GLOSS ENAMEL PAINT
C	EXPOSED CONCRETE OR CONCRETE BLOCK WITH EPOXY PAINT

CEILING (U/V/W/X/Y/Z)	
A	NON-RATED LAY-IN SQUARE-EDGE ACOUST. TILE IN 24" x 24" GRID
B	NON-RATED LAY-IN VINYL-FACED ACOUST. TILE IN 24 x 24" GRID
C	EXPOSED STRUCTURE UN-PAINTED
D	GYP. BOARD CEILING OVER CHANNELS SECURED TO TRUSSES
E	EXPOSED STRUCTURE DECK PAINTED WITH SEMI-GLOSS ENAMEL PAINT.

CEILING HGT. (U/V/W/X/Y/Z)	
A	8'-0"
B	8'-8"
C	9'-4"
D	10'-0"
E	20'-0"
F	8'-9"

SCHEDULE of TOILET ACCESSORIES

MARK	ITEM	MFR.	NO.	MOUNTING HEIGHTS
A	GRAB BARS AT SIDE WALL OF WATER CLOSETS	BOBRICK	B-6806 x42"	33" TO CENTERLINE A.F.F.
B	GRAB BARS AT REAR WALL OF WATER CLOSETS	BOBRICK	B-6806 x36"	33" TO CENTERLINE A.F.F.
C	SURFACE-MOUNTED DUAL-ROLL TISSUE PAPER DISPENSER	BOBRICK	B-6867	24" TO CENTERLINE A.F.F.
D	SURFACE-MOUNTED PAPER TOWEL DISPENSER	BOBRICK	B-2621	47" TO BOTTOM OF UNIT A.F.F.
E	SINGLE FEMININE NAPKIN DISPOSAL UNIT	BOBRICK	B-254	30" TO TOP OF UNIT A.F.F.
F	SHOWER CURTAIN ROD	BOBRICK	B-6107 60"	6'-6" TO CENTERLINE A.F.F.
G	SHOWER CURTAIN & HOOKS	BOBRICK	204-2 & 204-1	SUSPEND FROM ITEM "F" ABOVE
H	SHELF W/ MOP & BROOM HOLDERS	BOBRICK	B-239x34	5'-9" TO TOP OF SHELF A.F.F.
I	SOAP DISH	BOBRICK	B-438	4'-0" TO CENTERLINE A.F.F.
J	SURFACE-MOUNTED TOWEL BAR	BOBRICK	B-205 18"	4'-0" TO CENTERLINE A.F.F.
K	MIRROR 18"x36"	BOBRICK	B-165 18"x36"	40" TO BOTTOM OF MIRROR A.F.F.
L	AIR BLADE V HAND DRYER	SEE ELECTRICAL DRAWINGS		52" TO TOP OF UNIT A.F.F.

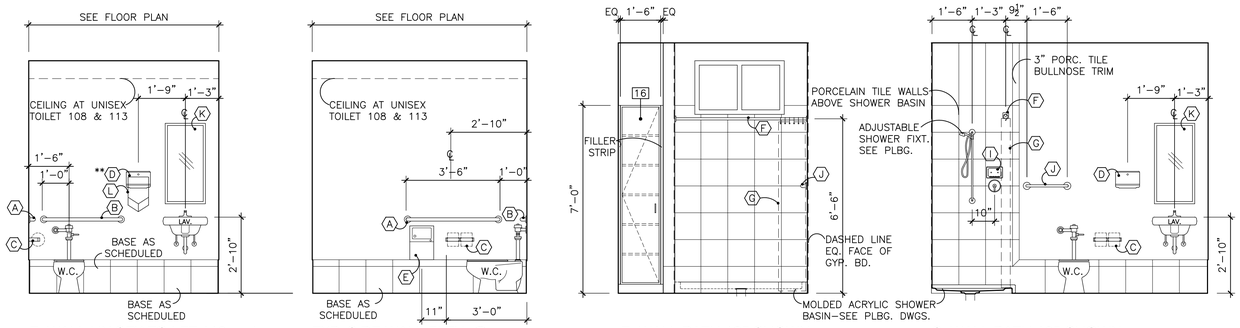

E. WALL UNISEX TOILET 113 and
W. WALL UNISEX TOILET 126 SHOWN
S. WALL UNISEX TOILET 108
SIM. but OPP. HAND

TYP. SIDE WALL ELEV. @
UNISEX TOILETS 113 and 126
UNISEX TOILETS 113 and 126

E. WALL BATH 125 SHOWN
E. WALL BATH 127
SIM. but OPP. HAND

S. WALL BATH 125 SHOWN
N. WALL BATH 127
SIM. but OPP. HAND

UNISEX TOILET and BATH ELEVATIONS

SCALE: 3/8" = 1'-0" ** ITEM "D" OCCURS at TOILETS 125, 126 and 127 ONLY. TOILETS 108 and 113 RECEIVE ITEM "L" AT THIS LOCATION.

SCHEDULE of CASEWORK (DENOTED BY SYMBOL "□")

ITEM#	ITEM	DESCRIPTION
1	WALL CABINET	Single door wall cabinet (right-or left-hand as shown). Nom. 30"h x 14"dp. x width as shown. Two (2) adjustable shelves.
2	WALL CABINET	Double door wall cabinet. Nom. 30"h x 14"dp. x width as shown. Two (2) adjustable shelves.
3	WALL CABINET	Double door wall cabinet. Nom. 12"h x 14"dp. x width shown. No shelves.
4	ALL DRAWER BASE CABINET	Nom. 36"h x 24"dp. x width as shown all drawer base cabinet. HPL Built-up countertop with Nom. 1 1/2" Self-edge and 4" high backsplash.
5	SINK BASE CABINET	Nom. 36"h x 24"dp. x width as shown double-door sink base cabinet with false front above doors. HPL Buildup countertop with Nom. 1 1/2" Self-edge with 4" high backsplash. See Elevations.
6	BASE CABINET CABINET	Double door base cabinet. Nom. 36"h x 24"dp. x width as shown. One (1) adjustable shelf. HPL Buildup countertop with Nom. 1 1/2" Self-edge and 4" high backsplash.
7	BASE CABINET WITH DRAWER	Nom. 36"h x 24"dp. x width as shown single-door base cabinet. One (1) drawer and one (1) adjustable shelf. HPL Buildup countertop with Nom. 1 1/2" Self-edge with 4" high backsplash. See Elevations.
8	BASE CABINET WITH DRAWER	Nom. 36"h x 24"dp. x width as shown double-door base cabinet. Two (2) drawers and one (1) adjustable shelf. HPL Buildup countertop with Nom. 1 1/2" Self-edge with 4" high backsplash. See Elevations.
9	CORNER BASE CABINET	Nom. 36"w x 36"h x 36"dp. diagonal corner base cabinet with right or left hinged door and two (2) revolving polymer shelves. HPL Built-up countertop with Nom. 1 1/2" Self-edge with 4" high backsplash.
10	BASE CABINET WITH DRAWER	Nom. 36"h x 24"dp. x width as shown double-door base cabinet. Two (2) drawers and one (1) adjustable shelf. HPL Buildup countertop with Nom. 1 1/2" Self-edge with no backsplash. See Elevations.
11	BASE CABINET CABINET	Double door base cabinet. Nom. 36"h x 24"dp. x width as shown. One (1) adjustable shelf. HPL Buildup countertop with Nom. 1 1/2" Self-edge and no backsplash.
12	BASE CABINET WITH DRAWER	Nom. 30"h x 24"dp. x width as shown double-door base cabinet. Two (2) drawers and one (1) adjustable shelf. HPL Buildup countertop with Nom. 1 1/2" Self-edge with no backsplash. See Elevations.
13	BASE CABINET	Nom. 15w x 30"h x 24"dp. two (2) drawer and one (1) file drawer base cabinet. HPL Buildup countertop with Nom. 1 1/2" Self-edge with no backsplash. See Elevations.
14	DESK UNIT	Nom. 1" th. plastic laminate countertop 18"dp. x width as shown on plan with nom. 1" th. plastic laminate end support panel as shown and support cleat at back and adjacent tall cabinet. See Elevations.
15	TALL CABINET	Nom. 84"h x 17"dp. x width as shown open tall cabinet with five (5) adjustable shelves. See Elevations.
16	TALL CABINET	Nom. 18"w x 84"h x 24"dp. single door tall cabinet with five (5) adjustable shelves.
17	TALL CABINET	Nom. 18"w x 84"h x 18"dp. single door tall cabinet with one (1) fixed shelf, one (1) hanging rod and two (2) drawers. Provide locks on all door and drawers. Noted as W.U. on Floor Plan.
18	TALL CABINET	Nom. 18"w x 84"h x 24"dp. single door tall cabinet with two (2) fixed shelves, and fixed bottom shelf.

CASEWORK NOTES:

RUBBER BASE OR WOOD BASE (AS SCHEDULED FOR ROOM) SHALL BE INSTALLED AROUND EXPOSED BASE OF ALL CASEWORK.
ALL DOORS AND DRAWERS SCHEDULED TO HAVE LOCKS SHALL BE KEYED IN GROUPS OR SEPARATELY, AS DETERMINED BY THE OWNER.

STATE OF ALABAMA
THOMAS M. McELRATH
3072
GADSDEN, ALABAMA
REGISTERED ARCHITECT

THOMAS M. McELRATH, ARCHITECT
ARCHITECTURE and SPACE PLANNING
717 MERIT SPRINGS ROAD
GADSDEN, ALABAMA 35901
PHONE: (256) 490-8244
EMAIL: TOM@TMM-ARCHITECT.COM

A NEW FIRE STATION NO. 1
located at
3170 Highway 77
for the
City of Southside, Alabama

LARGE SCALE PARTIAL PLANS ELEVATIONS & SCHEDULES

DRAWN	TMM
CHECKED	TMM
SCALE	AS NOTED
DATE	NOVEMBER 15, 2021
FILE	A8.0_LS Plans.dwg
JOB NO.	21-01
REVISIONS	

SHEET A8.0 OF 17 SHEETS

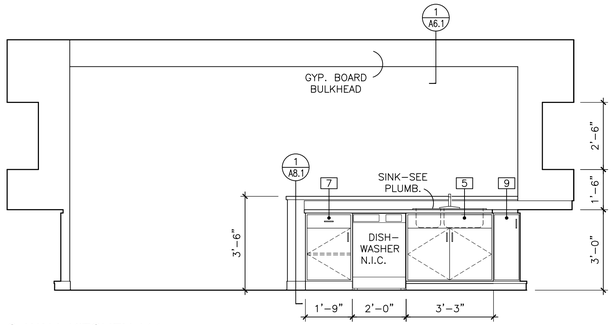

S. WALL KITCHEN 114

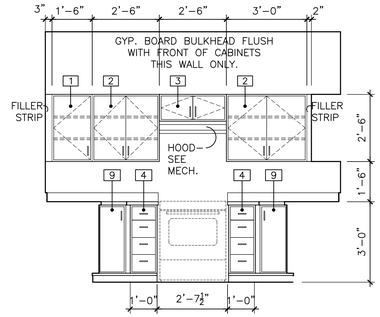

W. WALL KITCHEN 114

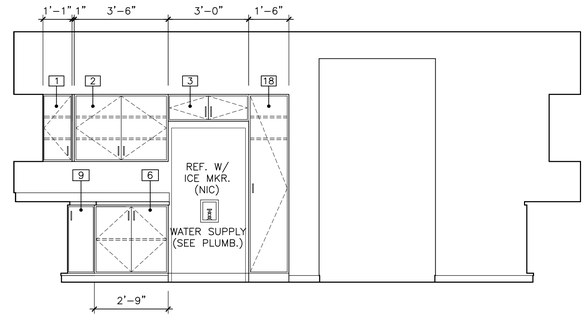

N. WALL KITCHEN 114

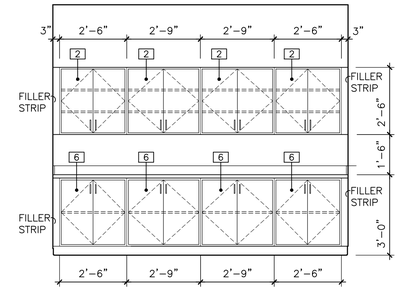

E. WALL KITCHEN 114

KITCHEN 114 ELEVATIONS

SCALE: 3/8" = 1'-0"

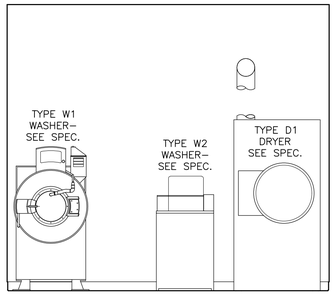

W. WALL LAUNDRY & DECONTAM. 130

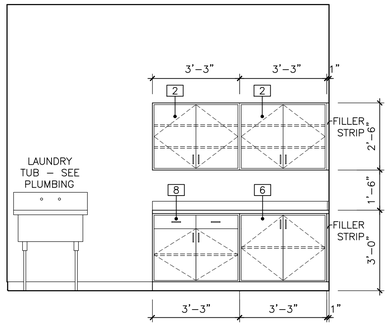

E. WALL LAUNDRY & DECONTAM. 130

LAUNDRY/DECONTAMINATION 130 ELEVATIONS

SCALE: 3/8" = 1'-0"

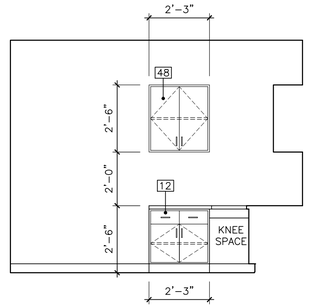

N. WALL RADIO ROOM 111

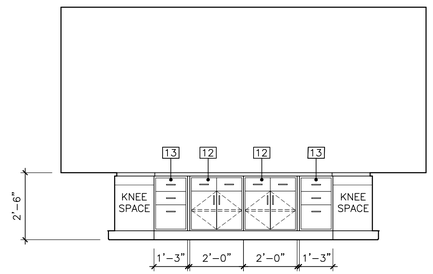

E. WALL RADIO ROOM 111

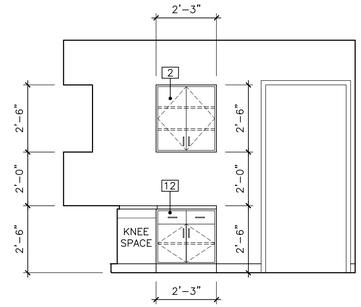

S. WALL RADIO ROOM 111

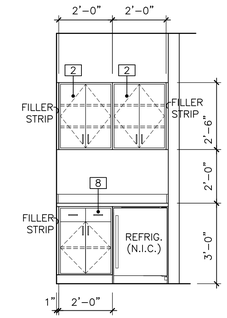

S. WALL CLASSROOM/ TRAINING 101

RADIO ROOM 111 ELEVATIONS

SCALE: 3/8" = 1'-0"

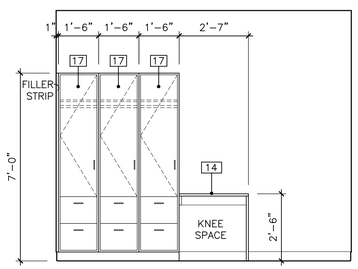

S. WALL BUNK ROOM 118, 119, 120 SHOWN

N. WALL BUNK ROOM 123, 124 SHOWN

N. WALL BUNK ROOM 117 SIM. but OPP. HAND

TYPICAL BUNK ROOM

SCALE: 3/8" = 1'-0"

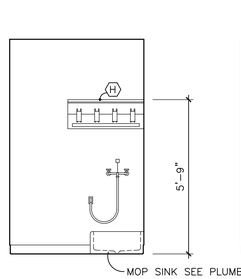

S. WALL UTILITY 116

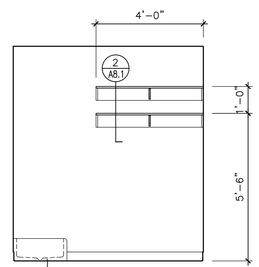

W. WALL UTILITY 116

CUSTODIAL ROOM 116

SCALE: 3/8" = 1'-0"

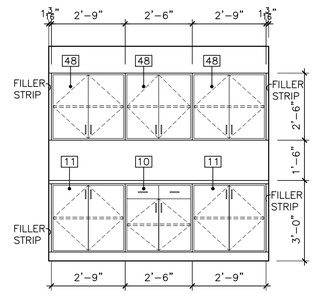

W. WALL WORK ROOM 107

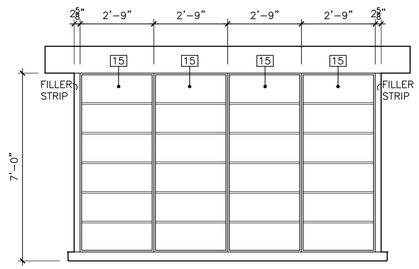

E. WALL SUPPLIES 110

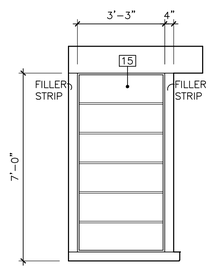

N. WALL SUPPLIES 110

S. WALL SIM. but OPP. HAND

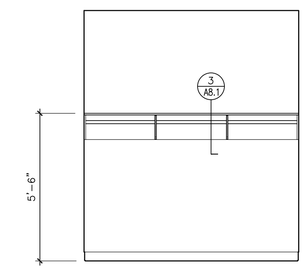

W. WALL PASSAGE 112A

SUPPLIES ROOM 110

SCALE: 3/8" = 1'-0"

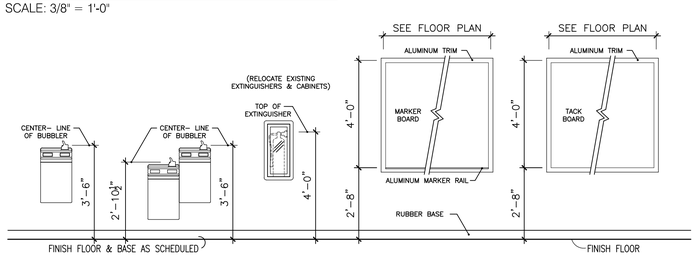

SINGLE DRINKING FOUNTAIN | PAIRED DRINKING FOUNTAINS | TYPICAL FIRE EXTINGUISHER CABINET | TYP. MARKER BOARD | TYP. TACK BOARD

TYPICAL MOUNTING HEIGHTS

SC: 3/8" = 1'-0"

NOT ALL OF THE ABOVE ARE APPLICABLE TO THIS PROJECT-
SEE FLOOR PLANS FOR LOCATIONS & LAYOUT of APPLICABLE ITEMS

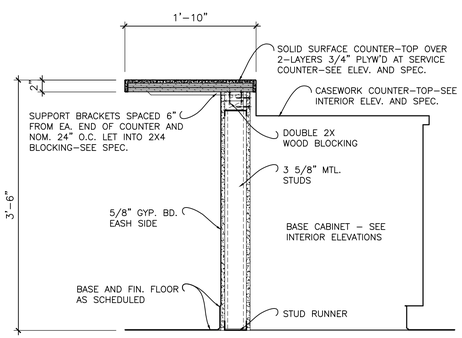

1 A8.1 COUNTERTOP AT KITCHEN HALF WALL

SCALE: 1" = 1'-0"

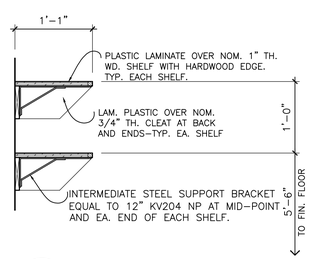

2 A8.1 FIXED SHELVES

SCALE: 1" = 1'-0"

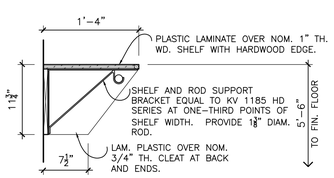

3 A8.1 FIXED SHELF and HANGING ROD

SCALE: 1" = 1'-0"

STATE OF ALABAMA
THOMAS M. McELRATH
3072
GADSDEN, ALABAMA
REGISTERED ARCHITECT

THOMAS M. McELRATH, ARCHITECT
ARCHITECTURE and SPACE PLANNING
717 MERIT SPRINGS ROAD
GADSDEN, ALABAMA 35901
PHONE: (256) 490-8244
EMAIL: TOM@TMM-ARCHITECT.COM

A NEW FIRE STATION NO. 1
located at
3170 Highway 77
for the
City of Southside, Alabama

INTERIOR ELEVATIONS

DRAWN	TMM
CHECKED	TMM
SCALE	AS NOTED
DATE	NOVEMBER 15, 2021
FILE	A8.1_LS Plans.dwg
JOB NO.	21–01
REVISIONS	

SHEET A8.1 OF 17 SHEETS

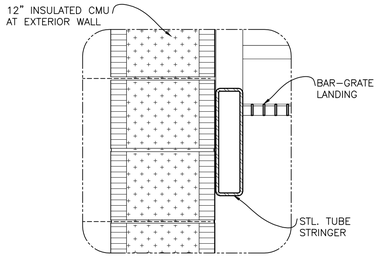

3 / A8.2 SECTION THRU INTERMEDIATE LANDING @ EXTERIOR WALL

SCALE: 1-1/2" = 1'-0"

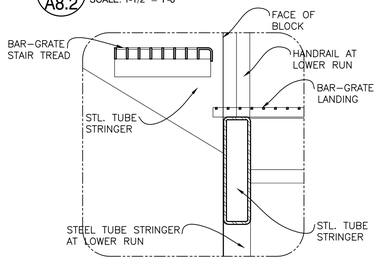

4 / A8.2 SECTION THRU UPPER STRINGER OF STAIR @ INTERMEDIATE LANDING

SCALE: 1-1/2" = 1'-0"

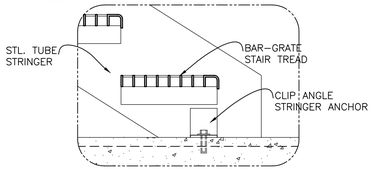

5 / A8.2 SECTION THRU LOWER STRINGER OF STAIR @ 1ST FLOOR SLAB

SCALE: 1-1/2" = 1'-0"

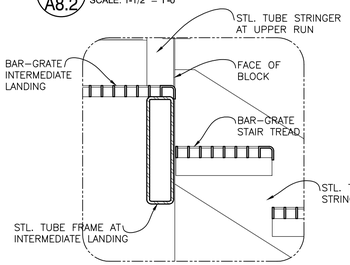

6 / A8.2 SECTION THRU LOWER STRINGER OF STAIR @ INTER. LANDING

SCALE: 1-1/2" = 1'-0"

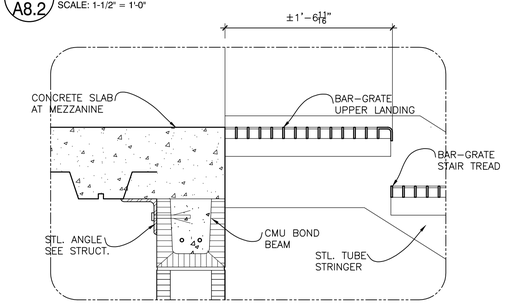

7 / A8.2 SECTION THRU UPPER STRINGER OF STAIR @ MEZZANINE FLOOR SLAB

SCALE: 1-1/2" = 1'-0"

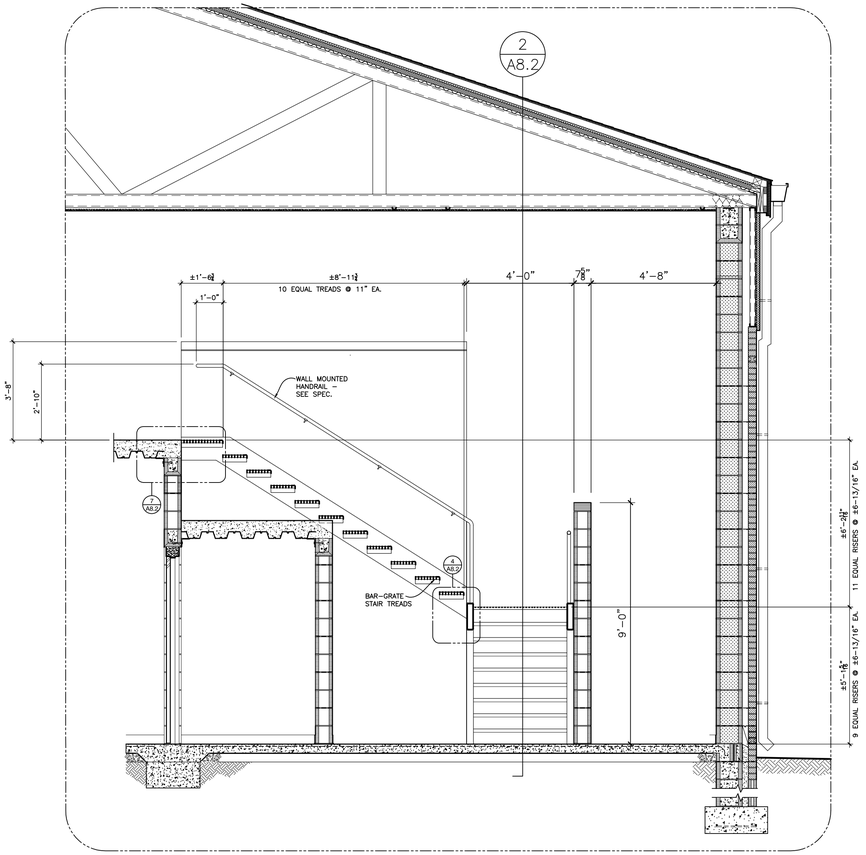

1 / A8.2 SECTION thru UPPER RUN of MEZZANINE STAIRS

SCALE: 3/8" = 1'-0"

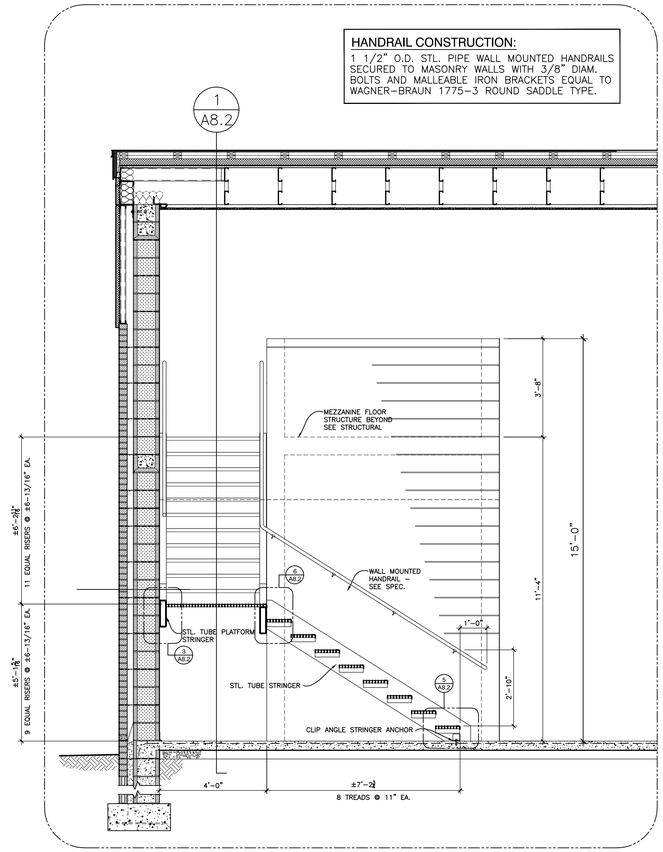

2 / A8.2 SECTION thru LOWER RUN of MEZZANINE STAIRS

SCALE: 3/8" = 1'-0"

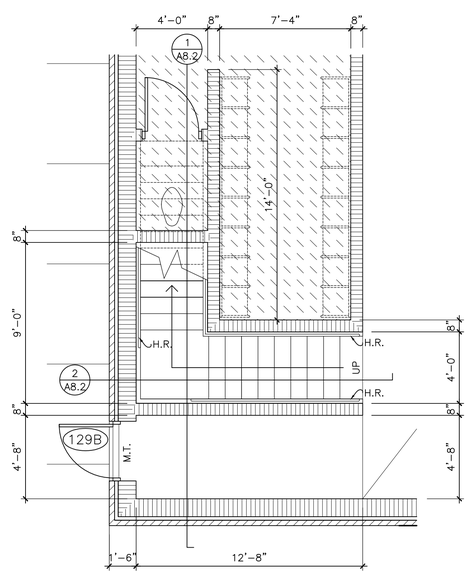

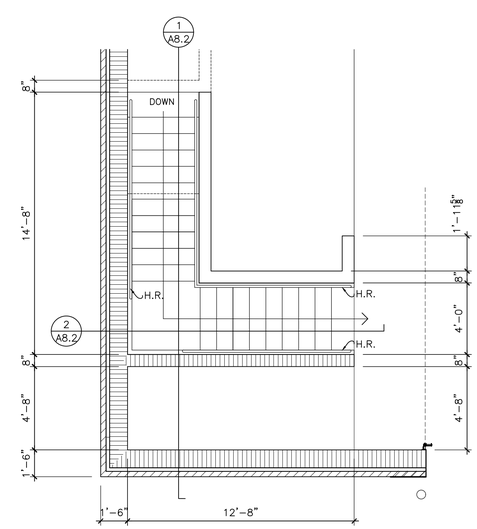

LARGE SCALE MEZZANINE STAIR PLANS

SCALE: 1/4" = 1'-0"

PLAN NORTH

STATE OF ALABAMA
THOMAS M. McELRATH
3072
GADSDEN, ALABAMA
REGISTERED ARCHITECT

THOMAS M. McELRATH, ARCHITECT
ARCHITECTURE and SPACE PLANNING
717 MERIT SPRINGS ROAD
GADSDEN, ALABAMA 35901
PHONE: (256) 490-8244
EMAIL: TOM@TMM-ARCHITECT.COM

A NEW FIRE STATION NO. 1
located at
3170 Highway 77
for the
City of Southside, Alabama

LARGE SCALE STAIR PLANS and SECTIONS

DRAWN	TMM
CHECKED	TMM
SCALE	AS NOTED
DATE	NOVEMBER 15, 2021
FILE	A8.0-8.2_LS Plans.dwg
JOB NO.	21-01
REVISIONS	

SHEET A8.2 OF 17 SHEETS

GENERAL NOTES:

1. CONTRACTOR SHALL COORDINATE BETWEEN ARCHITECTURAL, STRUCTURAL, MECHANICAL, ELECTRICAL, PLUMBING, AND OTHER DRAWINGS:

   A. ANY DISCREPANCIES OR CONFLICTS BETWEEN DRAWINGS OF DIFFERENT DISCIPLINES SHALL BE BROUGHT TO THE ATTENTION OF THE ARCHITECT. CONTRACTOR SHALL NOT PROCEED WITH SHOP DRAWING PREPARATION OR ANY CONSTRUCTION UNTIL THE ARCHITECT HAS GIVEN DIRECTION OF RESOLUTION FOR THE DISCREPANCY OR CONFLICT.

   B. NOT ALL OPENINGS AND OTHER COMPONENTS THAT ARE REQUIRED HAVE BEEN SHOWN ON THE STRUCTURAL DRAWINGS. COORDINATE AND VERIFY THE LOCATIONS AND SIZES OF CHASES, INSERTS, OPENINGS, SLEEVES, FINISHES, DEPRESSIONS AND OTHER PROJECT REQUIREMENTS AT FLOORS, WALLS, AND ROOFS BETWEEN DRAWINGS OF DIFFERENT DISCIPLINES.

2. IN THE CASE OF INCONSISTENCIES BETWEEN DRAWINGS AND SPECIFICATIONS OR WITHIN EITHER DOCUMENT, A BIDDER WILL BE DEEMED TO HAVE INCLUDED IN ITS BID THE BETTER QUALITY OR GREATER QUANTITY OF THE WORK INVOLVED UNLESS THE BIDDER ASKED FOR AND OBTAINED THE ARCHITECT'S WRITTEN CLARIFICATION OF THE REQUIREMENTS BEFORE SUBMISSION OF BID.

3. ALL DIMENSIONS SHOWN TAKE PRECEDENCE OVER SCALE SHOWN ON PLANS, SECTIONS, AND DETAILS. DO NOT SCALE THE DRAWINGS.

4. THE DETAILS PROVIDED ON SHEETS LABELED AS "TYPICAL DETAILS" APPLY GENERALLY TO THE DRAWINGS IN AREAS WHERE CONDITIONS ARE SIMILAR TO THOSE DESCRIBED IN THE DETAILS, UNLESS NOTED OTHERWISE.

5. ALL OF THE CONTRACTOR'S PROPOSED SUBSTITUTIONS ARE CONSIDERED CHANGE ORDERS AND SHALL BE SUBMITTED TO THE ARCHITECT/ENGINEER FOR REVIEW AND/OR APPROVAL PRIOR TO ANY PERTINENT WORK OR FABRICATION.

6. CONSTRUCTION METHODS, PROCEDURES AND SEQUENCES ARE THE CONTRACTOR'S RESPONSIBILITY. THE CONTRACTOR SHALL TAKE ALL THE NECESSARY MEANS TO MAINTAIN AND PROTECT THE STRUCTURAL INTEGRITY OF ALL CONSTRUCTION, NEW AND EXISTING, AT ALL STAGES INCLUDING, BUT NOT LIMITED TO, THE FOLLOWING:

   A. BRACE ALL BASEMENT-TYPE WALLS RETAINING EARTH UNTIL RESTRAINING SLABS/FLOORS HAVE BEEN INSTALLED AND REACHED REQUIRED DESIGN STRENGTH.

   B. BRACE/SHORE ALL WALLS AS REQUIRED TO MAINTAIN STABILITY DURING CONSTRUCTION.

   C. SHORE EXISTING FLOORS, WALLS, AND/OR ROOFS AS REQUIRED DURING DEMOLITION OF ANY PORTION OF EXISTING STRUCTURE UNTIL NEW SUPPORT FRAMING HAS BEEN INSTALLED.

7. ALL STRUCTURAL MEMBERS, AS SHOWN, HAVE BEEN DESIGNED TO CARRY IN PLACE DESIGN LOADS ONLY. THE CONTRACTOR SHALL BE RESPONSIBLE FOR THE SUPPORT OF ANY LOADS AND FORCES IMPOSED DURING CONSTRUCTION, TRANSPORTATION, ERECTION, AND HANDLING. THE CONTRACTOR SHALL INSURE THAT CONSTRUCTION LOADS DO NOT EXCEED THE DESIGN LIVE LOADS INDICATED ON THE STRUCTURAL DRAWINGS AND THAT THESE LOADS ARE NOT IMPOSED ON THE STRUCTURAL MEMBERS PRIOR TO THE TIME THAT CONCRETE REACHES THE FULL SPECIFIED DESIGN STRENGTH, STEEL MEMBERS AND THEIR CONNECTIONS ARE FULLY BOLTED AND / OR WELDED AND ALL OTHER FRAMING MEMBERS AND THEIR CONNECTIONS ARE IN PLACE.

8. CONTRACTOR SHALL FIELD VERIFY ALL EXISTING DIMENSIONS AND CONDITIONS PRIOR TO ANY PERTINENT WORK OR FABRICATION. ALL EXISTING CONDITIONS AND DIMENSIONS SHALL BE NOTED ON THE SHOP DRAWINGS.

9. ALL CONSTRUCTION JOINTS SHOWN ON THE STRUCTURAL DRAWINGS SHALL BE INCORPORATED INTO THE STRUCTURE. ADDITIONAL CONSTRUCTION JOINTS TO FACILITATE CONSTRUCTION SHALL BE LOCATED AND DETAILED ON THE SHOP DRAWINGS FOR REVIEW.

CONSTRUCTION CRANES:

1. DESIGN OF CONSTRUCTION CRANE FOUNDATIONS AND ASSOCIATED OPENINGS IN THE STRUCTURE ARE THE RESPONSIBILITY OF THE CONTRACTOR. THE DESIGN DOCUMENTS SUBMITTED FOR APPROVAL OF ANY OPENINGS & FOUNDATIONS MUST BEAR THE SEAL OF A REGISTERED PROFESSIONAL ENGINEER LICENSED IN THE STATE WHERE THE PROJECT IS LOCATED.THE PLANS AND DETAILS SHALL BE SUBMITTED TO THE ARCHITECT AND STRUCTURAL ENGINEER OF RECORD FOR REVIEW WITH ALL NECESSARY SUPPORTING CALCULATIONS BASED ON THE APPLICABLE DESIGN CODES. THE REVIEW IS ONLY FOR VERIFICATION THAT THE WORK HAS BEEN DONE AND IS NOT TO IMPLY ACCEPTANCE OF RESPONSIBLY FOR DESIGN ADEQUACY. RESPONSIBILITY IS SOLELY THE CONTRACTORS.

SHOP DRAWINGS/SUBMITTALS:

1. SHOP DRAWING SUBMITTAL REQUIREMENTS SHALL BE IN ACCORDANCE WITH THE PROJECT CONTRACT DOCUMENTS (DRAWINGS AND SPECIFICATIONS) AND SHALL FOLLOW INDUSTRY GUIDELINES AND STANDARDS.

2. ALL QUESTIONS, CLARIFICATIONS, OR MODIFICATIONS OF THE CONTRACT DOCUMENTS SHALL BE CLEARLY DOCUMENTED AND INDICATED ON THE SHOP DRAWING TRANSMITTAL OR COVER SHEET. ITEMS SHALL NOT BE CONSIDERED APPROVED UNLESS SPECIFICALLY ADDRESSED BY MBA IN THE REVIEW COMMENTS.

3. ALL SHOP DRAWINGS ARE TO BE NEWLY PREPARED. REPRODUCTIONS OF CONTRACT STRUCTURAL DRAWINGS FOR USE AS ERECTION DRAWINGS WILL NOT BE PERMITTED. SHOULD SHOP DRAWING SUBMITTALS CONTAIN ANY REPRODUCTIONS OF CONTRACT STRUCTURAL DRAWINGS, THEY WILL BE REJECTED AND RETURNED WITHOUT ENGINEER REVIEW.

   A. MBA MAY CONSIDER TRANSFERRING COMPUTER FILES, IN THE FORMAT CREATED, OF THE PLAN SHEETS TO PROJECT SUBCONTRACTORS TO ASSIST IN DEVELOPING SHOP DRAWINGS ON A CASE BY CASE BASIS. A SIGNED FILE TRANSFER AGREEMENT WILL BE REQUIRE PRIOR TO RELEASE OF MBA FILES.

4. CONTRACTOR TO REVIEW ALL SHOP DRAWING SUBMITTALS AND STAMP WITH APPROVAL PRIOR TO SUBMISSION TO ARCHITECT/ ENGINEER. ***SHOP DRAWINGS RECEIVED BY ARCHITECT/ENGINEER THAT HAVE NOT BEEN REVIEWED AND COORDINATED BY THE CONTRACTOR WILL BE RETURNED WITHOUT ARCHITECT/ENGINEER'S REVIEW.*** THE CONTRACTOR IS RESPONSIBLE FOR CONFIRMING AND CORRECTING DIMENSIONS WHICH PERTAIN TO FABRICATION PROCESSES OR CONSTRUCTION TECHNIQUES PRIOR TO SUBMITTAL AND FOR COORDINATION OF WORK OF ALL TRADES.

5. CONTRACTOR MAY PROVIDE REVIEWED AND APPROVED SUBMITTALS IN AN ELECTRONIC .PDF FORMAT FOR ENGINEER REVIEW AND APPROVAL, IN LIEU OF ELECTRONIC SUBMITTALS, CONTRACTOR MAY PROVIDE NO MORE THAN FOUR PAPER COPIES OF EACH STRUCTURAL SHOP DRAWING SUBMITTAL TO THE ENGINEER. THE STRUCTURAL ENGINEER WILL REVIEW AND RETURN TWO OF THE COPIES TO THE ARCHITECT. ADDITIONAL COPIES REQUIRED BY THE CONTRACTOR SHALL BE MADE BY THE CONTRACTOR AFTER THE REVIEW PROCESS.

6. MBA REVIEW OF SHOP DRAWING SUBMITTALS IS FOR GENERAL CONFORMANCE WITH THE DESIGN CONCEPT OF THE PROJECT AND FOR GENERAL COMPLIANCE WITH THE CONTRACT DOCUMENTS. REVIEW AND/OR APPROVAL OF SHOP DRAWINGS SHALL NOT RELIEVE THE CONTRACTOR OF THE RESPONSIBILITY FOR DEVIATIONS FROM THE REQUIREMENTS OF THE CONTRACT DOCUMENTS OR FOR ERRORS/ OMISSIONS IN THE SHOP DRAWINGS.

7. RESUBMITTED SHOP DRAWINGS SHALL HAVE CHANGES AND/OR ADDITIONS CLEARLY INDICATED. REVIEW OF RESUBMITTED SHOP DRAWINGS IS LIMITED TO THE ITEMS REQUIRING CORRECTION ON THE PREVIOUS SUBMITTAL.

EQUIPMENT NOTES:

1. CONTRACTOR SHALL COORDINATE BETWEEN DRAWINGS TO VERIFY ALL EQUIPMENT WEIGHTS, LOCATIONS, AND/OR PENETRATIONS. THIS INFORMATION SHALL BE PROVIDED TO SUBCONTRACTORS PERFORMING DELEGATED DESIGN AND SHALL BE IDENTIFIED ON THE CORRESPONDING SUBMITTAL.

2. EQUIPMENT LOADS CONSIDERED IN THIS DESIGN ARE SHOWN ON PLANS THUSLY (1400#). THE STRUCTURAL ENGINEER SHALL BE NOTIFIED AND ALLOWED TO MODIFY THE DESIGN AS REQUIRED IF FINAL EQUIPMENT WEIGHTS ARE HEAVIER OR THE EQUIPMENT LAYOUT DIFFERS FROM THE APPROXIMATE LAYOUT SHOWN ON THE PLAN.

3. CONTRACTOR SHALL FOLLOW THE MANUFACTURER'S CERTIFIED DRAWINGS, SPECIFICATIONS AND/OR OTHER REQUIREMENTS FOR ATTACHING THE EQUIPMENT TO THE STRUCTURE. IF STRUCTURAL MEMBERS CONFLICT WITH ATTACHMENT, THE STRUCTURAL ENGINEER SHALL BE NOTIFIED AND ALLOWED TO MODIFY THE DESIGN AS REQUIRED TO ACCOMMODATE THE MANUFACTURER'S REQUIREMENTS.

SITE AND FOUNDATION:

1. THE DESIGN OF FOUNDATIONS AND RELATED COMPONENTS IS BASED ON THE GEOTECHNICAL ENGINEERING REPORT PREPARED BY MBA ENGINEERS, INC., REFERENCE No. G21-051.00, DATED NOVEMBER 4, 2021. THE GENERAL CONTRACTOR SHALL ADHERE TO ALL REQUIREMENTS AND RECOMMENDATIONS IN THE REPORT.

2. ALLOWABLE SOIL BEARING PRESSURES (PSF):

ISOLATED FOOTINGS	3000 PSF
CONTINUOUS FOOTINGS	3000 PSF

3. EXCAVATE, WHERE REQUIRED, TO BUILDING AND STRUCTURE SUBGRADE.

4. PROOF-ROLL THE AREA UNDER THE BUILDING, PLUS 5'-0" ON ALL SIDES, WITH A LOADED DUMP TRUCK TO LOCATE ANY SOFT AREAS. A GEOTECHNICAL ENGINEER IS TO BE PRESENT DURING THIS OPERATION. ANY SOFT AREAS DETECTED ARE TO BE UNDERCUT AND REPLACED WITH ENGINEERED FILL.

5. ACCEPTABLE FILL MATERIAL SHALL BE FREE OF ORGANICS, AND HAVE A P.I. OF LESS THAN 25, L.L. OF LESS THAN 50 AND A MAXIMUM DRY DENSITY OF GREATER THAN 105 PCF. ONSITE MATERIAL MAY BE REUSED AS STRUCTURAL FILL AS LONG AS THE MATERIAL IS PROPERLY MOISTURE CONDITIONED. CRUSHED STONE BACKFILL TO MEET REQUIREMENTS OF A.H.D. No. 57 STONE. DRAINAGE FILL SUPPORTING SLABS SHALL MEET THE REQUIREMENTS OF THE GEOTECHNICAL ENGINEER.

6. FILL, WHERE REQUIRED, IS TO BE PLACED IN 8" LOOSE LIFTS AND COMPACTED TO 98% STANDARD PROCTOR (ASTM D-698), WITHIN ±2% OF OPTIMUM MOISTURE CONTENT. COMPACT FOOTING BEARING WITH A MANUALLY OPERATED PISTON TYPE TAMPER OR VIBRATORY PLATE COMPACTOR PRIOR TO PLACEMENT OF THE REINFORCING STEEL.

7. THE GEOTECHNICAL ENGINEER SHALL REVIEW THE FINAL FOUNDATION DESIGN TO VERIFY THAT ALL FOUNDATION SYSTEMS, INCLUDING SLAB ON GRADE DESIGN AND DETAILING, COMPLIES WITH THE GEOTECHNICAL PARAMETERS INCLUDED IN THE GEOTECHNICAL REPORT. WRITTEN VERIFICATION OF THIS REVIEW SHALL BE SUBMITTED TO THE ARCHITECT TWO WEEKS BEFORE FINAL PRICING/BID DATE.

CONCRETE:

1. CONCRETE CONSTRUCTION AND QUALITY ASSURANCE SHALL BE IN ACCORDANCE WITH CURRENT ACI STANDARDS.

2. CONCRETE SCHEDULES

	ITEM	28 DAY COMPRESSIVE STRENGTH
A.	CONCRETE IN CMU CELLS	3000 PSI GROUT
B.	ALL OTHER CONCRETE	3000 PSI NORMAL WEIGHT

3. CONCRETE COVER OVER REINFORCING (UNO)

A.	UNFORMED SURFACE IN CONTACT WITH EARTH:	3 IN.
B.	UNFORMED SURFACE OVER VAPOR BARRIER:	2 IN.
C.	FORMED SURFACES EXPOSED TO EARTH OR WEATHER	
	#6 AND LARGER	2 IN.
	#5 AND SMALLER	1 1/2 IN.
D.	FORMED SURFACES NOT EXPOSED TO EARTH OR WEATHER:	
	WALLS, SLABS:	3/4 IN.
	COLUMNS, BEAMS:	1 1/2 IN. TO TIES

4. CONCRETE AT SLABS ON GRADE SHALL HAVE A NOMINAL MAXIMUM COARSE AGGREGATE SIZE OF 3/4 INCH. ADJUST PORTIONS OF COMBINED COARSE, INTERMEDIATE AND FINE AGGREGATES TO PROVIDE A COARSENESS FACTOR OF 60 TO 75%.

5. ALL REINFORCING SHALL CONFORM TO THE LATEST REVISION OF ASTM SPECIFICATION A615, GRADE 60 AND BE DETAILED IN ACCORDANCE WITH THE LATEST REVISION OF ACI STANDARD 315.

6. NO REINFORCING BAR SHALL BE WELDED IN ANY MANNER, UNLESS SPECIFICALLY SHOWN OR NOTED ON THE DRAWINGS.

7. CONTINUOUS FOOTING REINFORCING BARS SHALL BE LAPPED 30 BAR DIAMETERS, BUT NOT LESS THAN 1'-0".

8. GRADE BEAM, ELEVATED BEAM, AND ELEVATED SLAB REINFORCING BARS SHALL BE SPLICED ONLY AS SHOWN ON THE DRAWINGS, EXCEPT THE REINFORCING DESIGNATED AS "CONTINUOUS" SHALL HAVE A CLASS "B" LAP SPLICE (PER ACI 318). LAP SPLICES OF CONTINUOUS REINFORCING SHALL BE MADE OVER SUPPORTS FOR BOTTOM BARS AND FOR INTERMEDIATE BARS AND AT MID-SPAN FOR TOP BARS. AT EXTERIOR SUPPORTS, TOP AND BOTTOM BARS SHALL BE HOOKED AND INTERMEDIATE BARS SHALL EXTEND TO WITHIN 2" OF EXTERIOR FACE.

9. COLUMN AND WALL VERTICAL REINFORCING BARS SHALL BE LAPPED WITH A CLASS "B" SPLICE. WALL HORIZONTAL REINFORCING BARS SHALL BE LAPPED 30 DIAMETERS AT SPLICE POINTS. PROVIDE CORNER BARS FOR WALLS.

10. PROVIDE FULL EMBEDMENT FOR ALL DOWELS. IF NOT OTHERWISE SPECIFIED, DOWEL SIZE AND SPACING SHALL BE THE SAME AS MAIN REINFORCING.

11. CONSTRUCTION JOINTS IN CONCRETE BEAMS AND SLABS SHALL BE AT OR NEAR MIDSPAN. ALL CONSTRUCTION JOINTS TO BE KEYED.

12. HORIZONTAL CONSTRUCTION JOINTS SHALL NOT BE PERMITTED IN WALLS AND BEAMS, UNLESS SHOWN ON THE STRUCTURAL DRAWINGS.

13. CONDUIT, PIPES, AND SLEEVES SHALL NOT BE SPACED CLOSER THAN 3 DIAMETERS ON CENTER, NOT HAVE AN OUTSIDE DIAMETER GREATER THAN 1/3 THE OVERALL THICKNESS OF THE SLAB, WALL OR BEAM IN WHICH THEY ARE EMBEDDED, AND SHALL HAVE A MINIMUM COVER OF 1 1/2 INCH FOR CONCRETE EXPOSED TO EARTH OR WEATHER AND 3/4 INCH FOR CONCRETE NOT EXPOSED TO EARTH OR WEATHER.

14. PIPING AND CONDUIT SHALL BE SO FABRICATED AND INSTALLED THAT CUTTING, BENDING, OR DISPLACEMENT OF REINFORCEMENT FROM ITS PROPER LOCATION WILL NOT BE REQUIRED.

15. THE CONTRACTOR SHALL SUBMIT, FOR REVIEW, SHOP DRAWINGS FOR ALL REINFORCING BARS INCLUDING DETAILS AT ALL OPENINGS AND ASSOCIATED ADDED REINFORCEMENT AS SHOWN ON TYPICAL DETAILS.

CONCRETE MASONRY:

1. MASONRY CONSTRUCTION SHALL CONFORM TO ACI 530.1 SPECIFICATION OR TMS 402/602.

2. MASONRY COMPRESSIVE STRENGTH (f'm) SHALL BE 1900 PSI BASED ON THE UNIT STRENGTH METHOD OR VERIFIED BY PRISM TESTS IN ACCORDANCE WITH ASTM C 1314.

3. MORTAR SHALL BE TYPE S OR M.

4. ALL REINFORCING BARS SHALL CONFORM TO ASTM A615, GRADE 60.

5. NO REINFORCING BAR SHALL BE WELDED IN ANY MANNER, UNLESS SPECIFICALLY SHOWN OR NOTED ON THE DRAWINGS.

6. BLOCK FILL SHALL BE GROUT WITH AN 8" TO 11" SLUMP, PROPORTIONED PER ASTM C 476 OR ATTAINING 3000 PSI AT 28 DAYS PER ASTM C 1019. DO NOT USE MORTAR AS BLOCK FILL.

7. ALL GROUT SHALL BE CONSOLIDATED AT TIME OF PLACEMENT USING A LOW-VELOCITY MECHANICAL VIBRATOR WITH A 3/4-INCH HEAD. RE-CONSOLIDATE GROUT AFTER INITIAL WATER LOSS AND SETTLEMENT HAS OCCURRED. DO NOT PLACE NEXT LIFT OF GROUT UNTIL LOWER LIFT HAS BEEN RE-CONSOLIDATED.

8. ALL BLOCK CELLS AND CAVITIES BELOW GRADE SHALL BE GROUTED SOLID. ALL LINTELS & BOND BEAMS SHALL BE GROUTED SOLID.

9. ALL BLOCK CELLS WHICH HAVE VERTICAL REINFORCING SHALL BE GROUTED FULL-HEIGHT IN 5'-0" LIFTS (MAXIMUM HEIGHT). PROVIDE 1 1/2" (MINIMUM) GROUT KEY BELOW MORTAR JOINT AT TOP OF EACH LIFT.

10. VERTICAL REINFORCING SHALL BE DOWELED TO FOOTING WITH HOOKED BARS AT THE BASE AND EXTEND FULL-HEIGHT INTO BOND BEAM AT THE TOP. WHERE SPLICES ARE NECESSARY, PROVIDE LAP LENGTH = 48 BAR DIAMETERS.

11. VERTICAL REINFORCING SHALL BE LOCATED IN THE CENTER OF THE BLOCK CELLS, UNLESS NOTED, AND SHALL BE HELD IN PLACE WITH BAR POSITIONERS (HECKMANN #376 OR HOHMANN & BARNARD #RB) PRIOR TO GROUTING. "WET-STICKING" OF REINFORCING SHALL NOT BE ALLOWED.

12. MINIMUM VERTICAL WALL REINFORCING IN ALL WALLS SHALL CONSIST OF ONE VERTICAL (MATCHING WALL REINF. BUT NOT LESS THAN #5) IN EACH CORNER, AT EACH DOOR & WINDOW JAMB & AT EACH SIDE OF CONTROL AND/OR EXPANSION JOINTS. PROVIDE ADDITIONAL VERTICAL REINFORCING AS SHOWN IN SECTIONS AND AS NOTED ON PLANS.

13. AT CORNERS AND INTERSECTIONS OF BOND BEAMS IN WALLS, PROVIDE CORNER BARS (48 DIAMETERS LONG EA. LEG) TO TIE WALLS TOGETHER. BAR DIAMETER SHALL MATCH BOND BEAM REINFORCING.

14. AT TOP OF ALL MASONRY WALLS (BEARING OR NON-BEARING), PROVIDE 8" DEEP CONTINUOUS BOND BEAM REINFORCED WITH 2#5 CONTINUOUS, UNLESS NOTED OTHERWISE.

15. WHERE CMU IS PLACED IN A STACK BOND PATTERN, HORIZONTAL WALL REINFORCING SHALL CONSIST OF A MINIMUM STANDARD (9 GAGE) LADDER-TYPE JOINT REINFORCING AT EVERY COURSE (8" O.C.) FOR 12" CMU OR AT EVERY OTHER COURSE (16" O.C.) FOR 8" CMU. COORDINATE W/ ARCHITECTURAL DRAWINGS. WHERE CMU IS PLACED IN A RUNNING BOND PATTERN, HORIZONTAL WALL REINFORCING SHALL CONSIST OF A MINIMUM STANDARD (9 GAGE) LADDER-TYPE REINFORCING AT EVERY OTHER COURSE (16" O.C.).

16. COORDINATE WITH ARCHITECTURAL DRAWINGS FOR DETAILS AND LOCATIONS OF MASONRY CONTROL JOINTS. IF NOT OTHERWISE SHOWN, DO NOT EXCEED 30'-0" BETWEEN BLOCK WALL CONTROL JOINTS AND 20'-0" BETWEEN BRICK VENEER CONTROL JOINTS.

17. ANCHOR WALLS TO SUPPORTING STRUCTURES AS SHOWN ON THE STRUCTURAL AND ARCHITECTURAL DRAWINGS. CONTRACTOR SHALL PROVIDE ADEQUATE TEMPORARY BRACING OF ALL MASONRY WALLS DURING CONSTRUCTION.

18. THE CONTRACTOR SHALL SUBMIT, FOR REVIEW, SHOP DRAWINGS FOR ALL REINFORCING BARS INCLUDING DETAILS AT ALL OPENINGS AND ASSOCIATED ADDED REINFORCEMENT AS SHOWN ON TYPICAL DETAILS.

POST-INSTALLED ANCHORS:

1. ANCHOR CAPACITY USED IN DESIGN IS BASED UPON THE TECHNICAL DATA PUBLISHED BY THE MANUFACTURER. SUBSTITUTION REQUESTS FOR ALTERNATE PRODUCTS MUST BE APPROVED IN WRITING BY THE STRUCTURAL ENGINEER OF RECORD PRIOR TO USE. CONTRACTOR SHALL PROVIDE CALCULATIONS DEMONSTRATING THAT THE SUBSTITUTED PRODUCT IS CAPABLE OF ACHIEVING THE PERFORMANCE VALUES OF THE SPECIFIED PRODUCT. SUBSTITUTIONS WILL BE EVALUATED ON THE FOLLOWING; HAVING AN ICC-ES ESR OR IAPMO UES ER SHOWING COMPLIANCE WITH THE RELEVANT BUILDING CODE FOR SEISMIC USES, LOAD RESISTANCE, INSTALLATION CATEGORY, AND AVAILABILITY OF COMPREHENSIVE INSTALLATION INSTRUCTIONS. ADHESIVE ANCHOR EVALUATION WILL ALSO CONSIDER CREEP, IN-SERVICE TEMPERATURE, AND INSTALLATION TEMPERATURE.

2. ANCHOR CAPACITY IS DEPENDANT UPON SPACING BETWEEN ADJACENT ANCHORS AND PROXIMITY OF ANCHORS TO EDGE OF CONCRETE. INSTALL ANCHORS IN ACCORDANCE WITH SPACING AND EDGE CLEARANCES INDICATED ON THE DRAWINGS.

3. EXISTING REINFORCING BARS IN THE CONCRETE STRUCTURE MAY CONFLICT WITH SPECIFIC ANCHOR LOCATIONS. UNLESS NOTED ON THE DRAWINGS THAT THE BARS CAN BE CUT, THE CONTRACTOR SHALL REVIEW THE EXISTING STRUCTURAL DRAWINGS AND SHALL UNDERTAKE TO LOCATE THE POSITION OF THE REINFORCING BARS AT THE LOCATIONS OF THE CONCRETE ANCHORS, BY USE OF HILTI FERROSCAN, GPR, X-RAY, CHIPPING OR OTHER MEANS APPROVED BY THE ENGINEER OF RECORD. DO NOT CUT PRESTRESSED OR POST TENSIONED TENDONS WITHOUT PRIOR APPROVAL FROM THE STRUCTURAL ENGINEER OF RECORD.

4. INSTALL ANCHORS PER THE MANUFACTURER PRINTED INSTALLATION INSTRUCTIONS.

5. UNLESS NOTED OTHERWISE, ALL ANCHORS TO BE INSTALLED WITH AN EMBEDMENT DEPTH EQUAL TO OR GREATER THAN MANUFACTURER STANDARD EMBEDMENT. OVERHEAD ADHESIVE ANCHORS MUST BE INSTALLED USING A SYSTEM THAT IS APPROVED FOR SUCH INSTALLATIONS IN THE PRODUCT CODE REPORT.

6. THE CONTRACTOR SHOULD ARRANGE AN ANCHOR MANUFACTURER'S REPRESENTATIVE TO PROVIDE ONSITE INSTALLATION TRAINING FOR ALL OF THEIR ANCHORING PRODUCTS SPECIFIED.

7. UNLESS SPECIFICALLY NOTED ON THE DRAWINGS, APPROVED ANCHORS ARE AS FOLLOWS:

   A. ANCHORAGE TO CONCRETE

      1. ADHESIVE ANCHORS FOR CONCRETE USE:
         a. SIMPSON STRONG-TIE AT-XP ADHESIVE ANCHORING SYSTEM WITH THREADED RODS (IAPMO UES ER-263).
         b. SIMPSON STRONG-TIE SET-XP ADHESIVE ANCHORING SYSTEM WITH THREADED RODS (ICC-ES ESR-2508) FOR SLOW CURE APPLICATIONS.
         c. HILTI HIT-HY 200 SAFE SET SYSTEM WITH HILTI HOLLOW DRILL BIT SYSTEM WITH THREADED ROD (ICC-ES ESR-3187).
         d. HILTI HIT-RE 500-SD EPOXY ADHESIVE ANCHORING SYSTEM WITH HAS-E THREADED ROD (ICC-ES ESR-2322) FOR SLOW CURE APPLICATIONS.

      2. MECHANICAL ANCHORS FOR CONCRETE USE:
         a. SIMPSON STRONG-TIE TITEN-HD (ICC-ES ESR-2713).
         b. SIMPSON STRONG-TIE STRONG-BOLT 2 (ICC-ES ESR-3037).
         c. HILTI KWIK HUS-EZ AND KWIK HUS EZ-I SCREW ANCHORS (ICC-ES ESR-3027).
         d. HILTI KWIK BOLT-TZ EXPANSION ANCHORS (ICC-ES ESR-1917).

   B. REBAR DOWELING INTO CONCRETE

      1. ADHESIVE ANCHORS FOR CONCRETE USE:
         a. SIMPSON STRONG-TIE SET-XP ADHESIVE ANCHORING SYSTEM WITH CONTINUOUSLY DEFORMED REBAR (ICC-ES ESR-2508).
         b. HILTI HIT-HY 200 SAFE SET SYSTEM WITH HILTI HOLLOW DRILL BIT SYSTEM WITH CONTINUOUSLY DEFORMED REBAR (ICC-ES ESR-3187).
         c. HILTI HIT-RE 500-SD EPOXY ADHESIVE ANCHORING SYSTEM WITH CONTINUOUSLY DEFORMED REBAR (ICC-ES ESR-2322).

   C. ANCHORAGE TO SOLID GROUTED MASONRY

      1. ADHESIVE ANCHORS USE:
         a. SIMPSON STRONG-TIE AT-XP ADHESIVE ANCHORING SYSTEM WITH THREADED ROD OR REBAR (IAMPMO UES ER-281).
         b. SIMPSON STRONG-TIE SET-XP ADHESIVE ANCHORING SYSTEM WITH THREADED ROD OR REBAR (IAMPMO UES ER-265).
         c. HILTI HIT-HY 70 MASONRY ADHESIVE ANCHORING SYSTEM PER ICC ESR-2682. STEEL ANCHOR ELEMENT SHALL BE HILTI HAS-E CONTINUOUSLY THREADED ROD OR CONTINUOUSLY DEFORMED STEEL REBAR.

      2. MECHANICAL ANCHORS USE:
         a. SIMPSON STRONG-TIE TITEN-HD (ICC-ES ESR-1056).
         b. SIMPSON STRONG-TIE STRONG-BOLT 2 (IAPMO-UES ER-240).
         c. HILTI KWIK HUS-EZ SCREW ANCHOR (ICC-ES ESR-3056).
         d. HILTI KWIK BOLT-3 EXPANSION ANCHORS (ICC-ES ESR-1385).

   D. ANCHORAGE TO HOLLOW / MULTI-WYTHE MASONRY

      1. ADHESIVE ANCHORS USE:
         a. SIMPSON STRONG-TIE "SET" (ICC-ES ESR-1772).
         b. SIMPSON STRONG-TIE AT (ICC-ES ESR-1958).
         c. HILTI HIT-HY 70 MASONRY ADHESIVE ANCHORING SYSTEM (ICC-ES ESR-3342).
         d. STEEL ANCHOR ELEMENT SHALL BE CONTINUOUSLY THREADED ROD OR CONTINUOUSLY DEFORMED STEEL REBAR. THE APPROPRIATE SIZE SCREEN TUBE SHALL BE USED PER ADHESIVE MANUFACTURER'S RECOMMENDATION.

TENSION LAP SPLICE LENGTH

BAR SIZE	f'c = 3000 PSI				f'c = 4000 PSI				f'c = 5000 PSI				f'c = 6000 PSI			
	TOP BARS		OTHER BARS		TOP BARS		OTHER BARS		TOP BARS		OTHER BARS		TOP BARS		OTHER BARS	
	A	B	A	B	A	B	A	B	A	B	A	B	A	B	A	B
#3	22"	28"	17"	22"	19"	24"	15"	19"	17"	22"	13"	17"	15"	20"	12"	15"
#4	29"	37"	22"	29"	25"	32"	19"	25"	22"	29"	17"	22"	20"	26"	16"	22"
#5	36"	47"	28"	36"	31"	40"	24"	31"	28"	36"	22"	28"	25"	33"	20"	25"
#6	43"	56"	33"	43"	37"	48"	29"	37"	33"	43"	26"	33"	31"	40"	24"	31"
#7	63"	81"	48"	63"	54"	70"	42"	54"	49"	63"	37"	49"	44"	58"	34"	44"
#8	72"	93"	55"	72"	62"	80"	48"	62"	55"	72"	43"	55"	51"	66"	39"	51"
#9	81"	105"	62"	81"	70"	91"	54"	70"	63"	81"	48"	63"	57"	75"	44"	57"
#10	91"	118"	70"	91"	79"	102"	61"	79"	70"	91"	54"	70"	64"	83"	49"	64"
#11	101"	131"	78"	101"	87"	113"	67"	87"	78"	101"	60"	78"	71"	93"	55"	71"

STATE OF ALABAMA
THOMAS M. McELRATH
3072
GADSDEN, ALABAMA
REGISTERED ARCHITECTS

THOMAS M. McELRATH, ARCHITECT
ARCHITECTURE and SPACE PLANNING
7317 MERIT SPRINGS ROAD
GADSDEN, ALABAMA 35901
PHONE: (256) 490-8244
EMAIL: TOM@TMM-ARCHITECT.COM

A NEW FIRE STATION NO. 1
located at
3170 Highway 77
for the
City of Southside, Alabama

GENERAL NOTES

DRAWN	KLO
CHECKED	KLO
SCALE	AS NOTED
DATE	NOVEMBER 15, 2021
FILE	
JOB NO.	21-01
REVISIONS	

STATE OF ALABAMA
LICENSED
No. 19873
PROFESSIONAL
11/15/21
ENGINEER
KEITH L. OWENS

MBA ENGINEERS, INC.
STRUCTURAL CIVIL GEOTECHNICAL

SHEET
S1.0
OF
SHEETS

STRUCTURAL STEEL:

1. DESIGN, CONSTRUCTION, QUALITY ASSURANCE, AND ERECTION OF STRUCTURAL STEEL SHALL BE IN ACCORDANCE WITH CURRENT AISC STANDARDS.
2. ALL STRUCTURAL STEEL WIDE FLANGE SHAPES SHALL CONFORM TO ASTM A992
3. ALL STRUCTURAL STEEL PLATES, ANGLES AND CHANNELS SHALL CONFORM TO ASTM A36.
4. ALL STRUCTURAL STEEL SQUARE, RECTANGULAR AND ROUND HSS SECTIONS SHALL CONFORM TO ASTM A500, GRADE B.
5. ALL STRUCTURAL STEEL PIPE SHALL CONFORM TO ASTM A53, TYPE E OR S, GRADE B
6. FABRICATION AND ERECTION SHALL CONFORM TO AISC CODE OF STANDARD PRACTICE.
7. ALL WELDING SHALL CONFORM TO AWS STANDARDS. THICKNESS OF WELDS ARE AS SHOWN, SPECIFIED OR REQUIRED.
8. ALL BOLTED CONNECTIONS SHALL BE MINIMUM 3/4" DIAMETER, A325 HIGH STRENGTH BOLTS, UNLESS NOTED OTHERWISE.
9. THE STRUCTURAL STEEL FABRICATOR SHALL PROVIDE CERTIFICATIONS BY A PROFESSIONAL STRUCTURAL ENGINEER (P.E.) REGISTERED IN THE STATE OF ALABAMA THAT THE CONNECTION DESIGN IS IN ACCORDANCE WITH ALL APPLICABLE CODES AND SPECIFICATIONS. CONNECTION DESIGN CALCULATIONS SHALL BE SUBMITTED TO THE STRUCTURAL ENGINEER OF RECORD FOR REVIEW.
10. ALL BEAM CONNECTIONS SHALL BE "SIMPLE SHEAR CONNECTIONS" UNLESS NOTED OTHERWISE. WHERE BEAM REACTIONS AND/OR DESIGN FORCES ARE NOT SHOWN ON THE STRUCTURAL DRAWINGS, THE CONNECTIONS SHALL BE DESIGNED TO SUPPORT A REACTION EQUAL TO ONE-HALF THE TOTAL UNIFORM LOAD CAPACITY FROM THE MAXIMUM UNIFORM LOAD TABLE (LATEST AISC MANUAL OF STEEL PRACTICE) MULTIPLIED BY A FACTOR OF 1.2 (NON-COMPOSITE BEAMS) OR 1.45 (COMPOSITE BEAMS) FOR GIVEN SHAPE, SPAN, AND GRADE OF STEEL.

STEEL DECK:

1. STEEL DECK CONSTRUCTION SHALL BE IN ACCORDANCE WITHTHE LATEST EDITION OF SDI STANDARDS.
2. ATTACH ROOF DECK TO SUPPORTS AT 12" OC. W/ #12 TEK SCREWS. ATTACH TO PERIMETER SUPPORTS AT 6" OC. PROVIDE #10 TEK SCREW SIDELAP FASTENERS AT 36" OC. (MIN. 1 PER SPAN).
3. DECK SUPPORTS AROUND STEEL COLUMNS AND CLOSURE ANGLES SHALL BE SUPPLIED BY THE DECK MANUFACTURER, IF REQUIRED.

PRE-FABRICATED COLD-FORMED STEEL TRUSSES:

1. THE DESIGN, MANUFACTURE, QUALITY ASSURANCE AND ERECTION OF COLD-FORMED STEEL TRUSSES SHALL BE IN ACCORDANCE WITH THE CURRENT AISI NORTH AMERICAN STANDARDS FOR COLD-FORMED STEEL FRAMING.
2. A TRUSS DESIGN PACKAGE SHALL BE SUBMITTED TO THE STRUCTURAL ENGINEER OF RECORD FOR REVIEW PRIOR TO FABRICATION AND ERECTION. THIS PACKAGE SHALL INCLUDE, AT A MINIMUM, EACH INDIVIDUAL TRUSS DESIGN DRAWING AND CALCULATION, THE TRUSS PLACEMENT DIAGRAM, THE PERMANENT INDIVIDUAL TRUSS MEMBER RESTRAINT/BRACING METHOD AND DETAILS, AND ANY OTHER STRUCTURAL DETAILS GERMANE TO THE TRUSSES. THE TRUSS DESIGN DRAWINGS SHALL BEAR THE SEAL AND SIGNATURE OF THE TRUSS DESIGNER WHO SHALL BE REGISTERED IN THE STATE OF ALABAMA.
3. TRUSS TO TRUSS CONNECTIONS SHALL BE DESIGNED AND SPECIFIED BY THE TRUSS MANUFACTURER FOR THE DESIGN LOADS.
4. TRUSS MANUFACTURER SHALL DESIGN AND PROVIDE COLD-FORMED STEEL FRAMING FOR ALL RIDGE, HIP RIDGE AND VALLEY MEMBERS.
5. ALL TEMPORARY AND PERMANENT BRACING MEMBERS AND CONNECTIONS REQUIRED FOR TRUSSES SHALL BE DESIGNED AND DETAILED BY THE TRUSS DESIGNER. AT A MINIMUM, TRUSS INSTALLER SHALL COMPLY WITH THE "GUIDE TO GOOD PRACTICE FOR HANDLING, INSTALLING, RESTRAINING, AND BRACING OF COLD-FORMED STEEL TRUSSES" BY THE COLD-FORMED STEEL COUNCIL.
6. TRUSSES SHALL BE DESIGNED FOR THE FOLLOWING SUPERIMPOSED LOADS:
   ROOF TOP CHORD DEAD LOAD--20 PSF
   ROOF BOTTOM CHORD DEAD LOAD------------------------------------5 PSF
   ROOF TOP CHORD LIVE LOAD---20 PSF
7. TRUSSES SHALL BE DESIGNED FOR COMPONENT AND CLADDING WIND LOADS BASED ON THE PROVIDED DESIGN CRITERIA AND COMPONENT AND CLADDING WIND LOAD TABLES.
8. TRUSS DESIGNER SHALL VERIFY THAT ALL EQUIPMENT WEIGHTS, CONCENTRATED LOADS, AND LOCATIONS ARE PROVIDED BY THE GENERAL CONTRACTOR. GENERAL CONTRACTOR SHALL PROVIDE THIS INFORMATION TO THE TRUSS DESIGNER. THE LOADS AND CORRESPONDING LOCATIONS SHALL BE IDENTIFIED ON THE TRUSS PLACEMENT DIAGRAM.
9. MECHANICAL DUCT OPENINGS IN TRUSSES SHALL BE COORDINATED WITH THE MECHANICAL DRAWINGS TO ACCOMMODATE THE DUCT LOCATION AND SIZE WITH INSULATION.

DESIGN CRITERIA:

1. GOVERNING CODE:
   A. INTERNATIONAL BUILDING CODE, I.B.C. 2018
2. GRAVITY DESIGN LOADS:
   A. DEAD
      1. DESIGN DEAD LOADS ARE BASED ON THE SELF WEIGHT OF CONSTRUCTION MATERIALS SHOWN IN THE ARCHITECTURAL AND STRUCTURAL DRAWINGS. ANY ALTERNATE MATERIALS SHALL BE SUBMITTED TO THE STRUCTURAL ENGINEER TO REVIEW.
   B. LIVE:
      1. STORM SHELTER 100 PSF
      2. CORRIDORS 100 PSF
      3. ROOF 20 PSF
   C. SNOW
      1. GROUND SNOW LOAD (Pf) = 5 PSF
      2. SNOW EXPOSURE FACTOR (Ce) = 1.0
      3. SNOW LOAD IMPORTANCE FACTOR (Is) = 1.0
      4. THERMAL FACTOR (Ct) = 1.0
3. LATERAL DESIGN LOADS:
   A. WIND
      1. DESIGNED PER ASCE 7-10
      2. BASIC WIND SPEED = 120 MPH
      3. WIND RISK CATEGORY = IV
      4. BUILDING CATEGORY = ENCLOSED
      5. EXPOSURE CATEGORY = C
      6. INTERNAL PRESSURE COEFFICIENT (GCpl) = ±0.18
      7. COMPONENTS & CLADDING WIND PRESSURES SEE CHART
   B. STORM SHELTER WIND
      1. DESIGNED FOR WIND ACCORDING TO ICC/NSSA STANDARD FOR THE DESIGN AND CONSTRUCTION OF STORM SHELTERS (ICC 500 -2014)
      2. BASIC WIND SPEED = 250 MPH
      3. WIND IMPORTANCE FACTOR (Iw) = 1.0
      4. BUILDING CATEGORY = ENCLOSED
      5. EXPOSURE CATEGORY = C
      6. INTERNAL PRESSURE COEFFICIENT (GCpl) = ±0.55 (PER EXCEPTION TO SECTION 304.8 OF ICC 500)
      7. TOPOGRAPHIC FACTOR, Kzt = 1.0
      8. DIRECTIONALITY FACTOR, Kd = 1.0
      9. MEETS MISSILE IMPACT CRITERIA OF ICC 500 (15 POUND 2x4 MISSILE IMPACTING AT 100 MPH FOR VERTICAL
   C. EARTHQUAKE
      1. SEISMIC IMPORTANCE FACTOR (I) = 1.5
      2. RISK CATEGORY = IV
      3. MAPPED SPECTRAL RESPONSE ACCELERATIONS
         A. Ss = 0.265
         B. S1 = 0.106
      4. SOIL SITE CLASS = D
      5. DESIGN SPECTRAL RESPONSE ACCELERATIONS
         A. Sds = 0.280
         B. Sd1 = 0.167
      6. SEISMIC DESIGN CATEGORY = D
      7. BASIC SEISMIC-FORCE-RESISTING SYSTEM SPECIAL REINFORCED MASONRY SHEAR WALLS
      8. DESIGN BASE SHEAR = 90 KIPS
      9. RESPONSE MODIFICATION FACTOR (R) = 5
      10. ANALYSIS PROCEDURE: EQUIVALENT LATERAL FORCE

SPECIAL INSPECTIONS:

1. THE OWNER SHALL EMPLOY A QUALIFIED TESTING AGENT/ENGINEER TO PROVIDE SPECIAL INSPECTIONS. SPECIAL INSPECTORS SHALL SUBMIT RESUME OF EXPERIENCE AND QUALIFICATIONS OF ALL INDIVIDUALS PERFORMING WORK TO THE ARCHITECT/STRUCTURAL ENGINEER OF RECORD FOR APPROVAL PRIOR TO ANY WORK BEING PERFORMED. SPECIAL INSPECTIONS SHOULD BE IN ACCORDANCE WITH THE INTERNATIONAL BUILDING CODE, 2015 ED. AND AS INDICATED IN THE SPECIFICATIONS.

STORM SHELTER QUALITY ASSURANCE PLAN:

1. ROOF CLADDING AND ROOF FRAMING CONNECTIONS:
   A. ATTACH COMPOSITE METAL DECK TO BEAMS AND/OR JOISTS AT 12" ON CENTER WITH 3/4" DIAMETER PUDDLE WELDS. ATTACH TO PERIMETER SUPPORTS AT 6" ON CENTER. PROVIDE SIDELAP FASTENERS AT 36" ON CENTER MINIMUM (1 SIDELAP FASTENER PER SPAN MINIMUM). DECK WELDS SHALL BE INSPECTED AS NOTED IN TABLE OF SPECIAL INSPECTIONS.
   B. WELD BEAMS AND/OR JOISTS TO EMBED PLATES AS NOTED IN TYPICAL BEARING DETAILS. WELDS AND PLACEMENT OF EMBED PLATES SHALL BE INSPECTED AS NOTED IN THE TABLE OF SPECIAL INSPECTIONS.
2. WALL CONNECTIONS TO ROOF AND FLOOR DIAPHRAGM AND FRAMING:
   A. ATTACH ROOF SLAB TO WALL WITH REBAR DOWELS OF SIZE AND SPACING SHOWN IN WALL SECTIONS. DOWEL PLACEMENT SHALL BE INSPECTED AS NOTED FOR STEEL REINFORCING IN THE TABLE OF SPECIAL INSPECTIONS.
3. ROOF AND FLOOR DIAPHRAGM SYSTEM, INCLUDING CONNECTORS, DRAG STRUTS, AND BOUNDARY ELEMENTS:
   A. REINFORCE ROOF SLAB WITH WELDED WIRE FABRIC AND STEEL REINFORCING AS SHOWN IN BUILDING SECTIONS. REINFORCING SIZE AND PLACEMENT SHALL BE INSPECTED AS NOTED IN THE TABLE OF SPECIAL INSPECTIONS.
4. MAIN WIND FORCE RESISTING SYSTEMS, INCLUDING BRACED FRAMES, MOMENT FRAMES AND SHEAR WALLS:
   A. MAIN WIND FORCE RESISTING SYSTEM CONSISTS OF MASONRY WALLS AND COMPOSITE SLAB ROOF ACTING AS MOMENT FRAMES. MASONRY WALLS ALSO ACT AS SHEAR WALLS. INSPECT MASONRY, GROUT, AND REINFORCING STEEL AS NOTED IN THE TABLE OF SPECIAL INSPECTIONS.
5. MAIN WIND FORCE RESISTING SYSTEM CONNECTIONS TO THE FOUNDATION:
   A. ATTACH MASONRY WALLS TO SPREAD FOUNDATIONS WITH REBAR DOWELS OF SIZE AND SPACING SHOWN IN WALL SECTIONS (MATCH VERTICAL REINFORCING). DOWEL PLACEMENT AND SIZE SHALL BE INSPECTED AS NOTED IN THE TABLE OF SPECIAL INSPECTIONS.
6. FABRICATION AND INSTALLATION OF COMPONENTS AND ASSEMBLIES OF THE SHELTER ENVELOPE REQUIRED TO MEET MISSILE IMPACT TEST REQUIREMENTS OF CHAPTER 3:
   A. MASONRY WALLS SHALL BE GROUTED AND REINFORCED AS SHOWN IN BUILDING SECTIONS IN ORDER TO MEET THE MISSILE IMPACT TEST REQUIREMENTS FOR ICC - 500.
   B. CONCRETE SLAB ON COMPOSITE DECK AT ROOF SHALL BE OF THICKNESS NOTED AND SHALL BE REINFORCED AS SHOWN IN BUILDING SECTIONS IN ORDER TO MEET THE MISSILE IMPACT TEST REQUIREMENTS FOR ICC-500.
7. REQUIREMENTS FOR COMPONENTS AND CLADDING INCLUDING SOFFITS:
   A. DOORS, WINDOWS, AND LOUVERS SHALL MEET MISSILE IMPACT TEST REQUIREMENTS OF ICC-500. REFER TO ARCHITECTURAL AND MECHANICAL DRAWINGS AND SPECIFICATIONS FOR DETAILS.
   B. DOOR, WINDOW, AND LOUVER INSTALLATIONS SHALL BE INSPECTED PER ARCHITECTURAL AND MECHANICAL SPECIFICATIONS.
8. CORROSION RESISTANCE OR PROTECTION OF METAL CONNECTORS EXPOSED TO THE ELEMENTS THAT PROVIDE LOAD PATH CONTINUITY:
   A. NO EXPOSED CONNECTORS IN THIS STORM SHELTER.
9. REQUIREMENTS FOR CRITICAL SUPPORT SYSTEMS CONNECTIONS AND DEBRIS IMPACT PROTECTION OF THE COMPONENTS AND CONNECTIONS:
   A. SEE MECHANICAL AND ELECTRICAL DRAWINGS FOR CRITICAL SUPPORT SYSTEMS THAT ARE TO BE LOCATED INSIDE STORM SHELTER.
   B. MECHANICAL AND ELECTRICAL CRITICAL SUPPORT SYSTEMS LOCATED OUTSIDE OF THE STORM SHELTER SHALL BE PROTECTED WITH A PRE-MANUFACTURED ENCASEMENT SHELTER THAT MEETS ALL CRITERIA OF ICC-500. SEE MECHANICAL AND ELECTRICAL DRAWINGS FOR LOCATIONS AND DETAILS OF THESE SYSTEMS AND THEIR ENCLOSURES.
10. INSPECTION & TESTING:
   A. SPECIAL INSPECTION OF ALL STORM SHELTER CONSTRUCTION SHALL BE PER TABLE OF SPECIAL INSPECTIONS.
   B. MATERIAL TESTING SHALL BE OF TYPE AND FREQUENCY INDICATED IN SPECIFICATIONS.
   C. CONTRACTOR SHALL NOTIFY ENGINEER OF RECORD AT ALL SIGNIFICANT CONSTRUCTION STAGES TO ALLOW FOR STRUCTURAL OBSERVATION OF SHELTER CONSTRUCTION.
   D. INSPECTION, TESTING AND OBSERVATION REPORTS SHALL BE DISTRIBUTED TO CONTRACTOR, ARCHITECT, AND ENGINEER OF RECORD. REPORTS INDICATING DEFICIENCIES OR DEVIATIONS FROM CONTRACT DRAWINGS SHOULD BE DISTRIBUTED WITHIN 24 HOURS OF THE SITE VISIT. INSPECTOR SHALL NOTIFY CONTRACTOR OF ANY DEFICIENCY OR DEVIATION PRIOR TO LEAVING SITE.

COMPONENTS AND CLADDING DESIGN WIND PRESSURES (PSF)

ZONE	EFFECTIVE WIND AREA				
	10 SF	20 SF	50 SF	100 SF	200 SF
1	23	21	19	17	17
	-37	-36	-35	-34	-34
2	23	21	19	17	17
	-64	-59	-52	-47	-47
3	23	21	19	17	17
	-94	-88	-80	-74	-74
4	40	39	36	34	33
	-44	-42	-40	-38	-36
5	40	39	36	34	33
	-54	-50	-46	-42	-38

NOTE: WIND LOADS SHOWN IN TABLE ARE ULTIMATE LOADS PER ASCE 7-10. FOR USE WITH ASCE 7-10 LOAD COMBINATIONS (MULTIPLY BY 0.6 FOR SERVICE LOADS)

STORM SHELTER COMPONENTS AND CLADDING DESIGN WIND PRESSURES (PSF)

ZONE	EFFECTIVE WIND AREA				
	10 SF	20 SF	50 SF	100 SF	200 SF
1	117	113	107	103	103
	-213	-209	-204	-200	-200
2	117	113	107	103	103
	-324	-295	-256	-227	-227
3	117	113	107	103	103
	-461	-391	-298	-227	-227
4	200	193	184	178	171
	-212	-205	-197	-190	-184
5	200	193	184	178	171
	-250	-236	-219	-205	-192

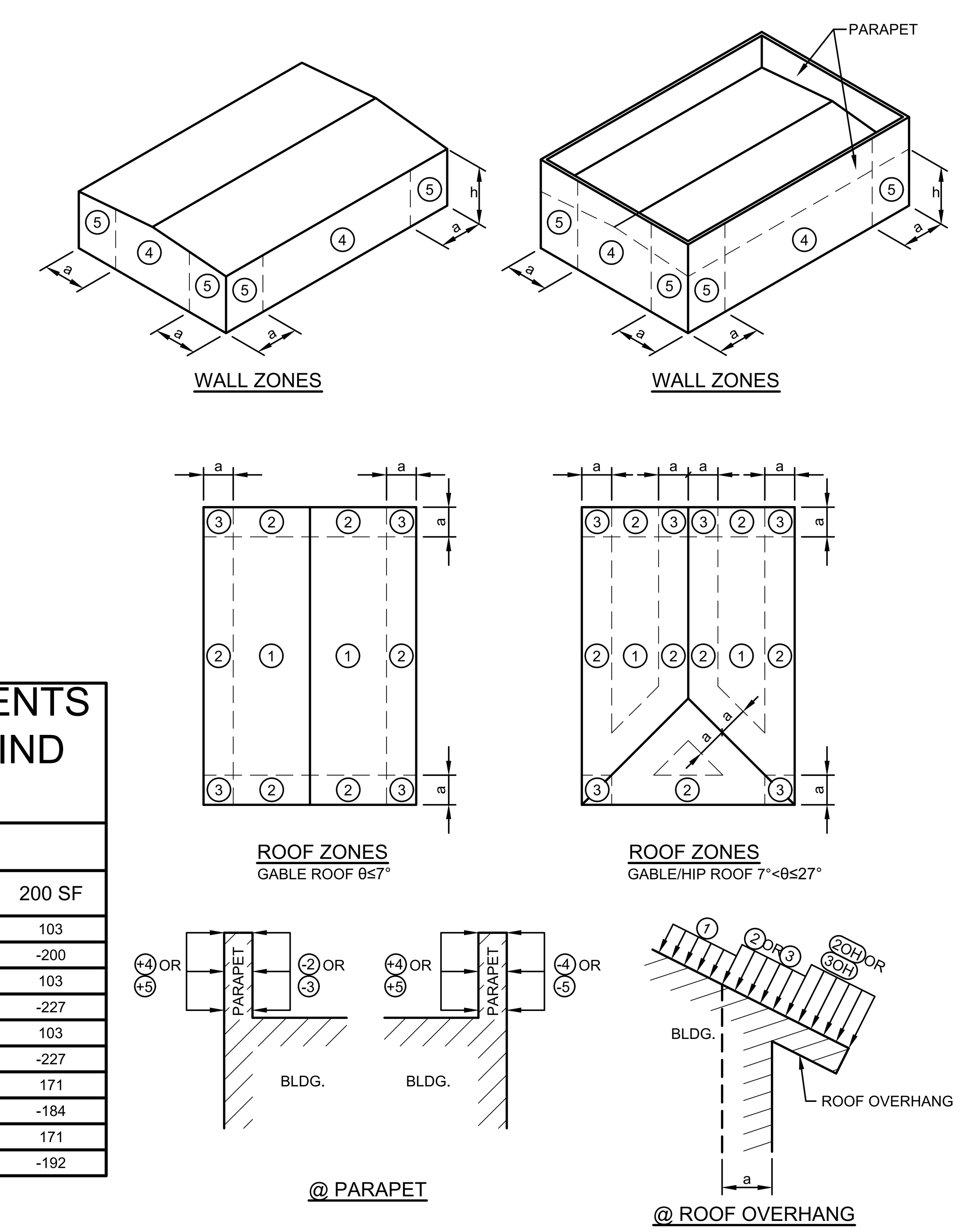

ZONE LAYOUT DIAGRAMS

STATE OF ALABAMA REGISTERED ARCHITECTS
THOMAS M. McELRATH 3072
GADSDEN, ALABAMA

THOMAS M. McELRATH, ARCHITECT
ARCHITECTURE and SPACE PLANNING
717 MERIT SPRINGS ROAD
GADSDEN, ALABAMA 35901
PHONE: (256) 490-8244
EMAIL: TOM@TMM-ARCHITECT.COM

A NEW FIRE STATION NO. 1
located at
3170 Highway 77
for the
City of Southside, Alabama

GENERAL NOTES

DRAWN	KLO
CHECKED	KLO
SCALE	AS NOTED
DATE	NOVEMBER 15, 2021
FILE	
JOB NO.	21-01
REVISIONS	

ALABAMA LICENSED No. 19873 PROFESSIONAL ENGINEER KEITH L. OWENS 11/15/21

MBA ENGINEERS, INC.
STRUCTURAL CIVIL GEOTECHNICAL

SHEET
S1.1
OF
SHEETS

FILE: 21087-PLANS.dwg TAB: S1.1 PD: 11/4/2005 11:04 AM PB: Troy Polet

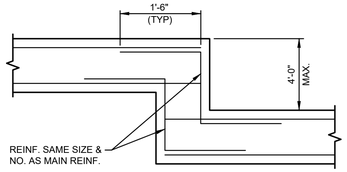

TYPICAL FOOTING STEP DETAIL

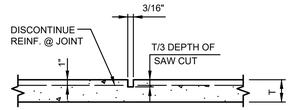

TYPICAL SAWED CONTROL JOINT

NOTES:
1. USE SAWS, BLADES AND SKID PLATES BY SOFF-CUT INTERNATIONAL OR EQUAL.
2. SEE PLAN FOR JOINT LAYOUT OR PROVIDE @ 12'-0" OC. MAX. EA. WAY.
3. START CUTTING SAWED JOINTS AS SOON AS CONCRETE HAS HARDENED SUFFICIENTLY TO PREVENT RAVELING OR DISLODGING OF AGGREGATES. THIS WILL TYPICALLY BE FROM 1 HOUR IN HOT WEATHER TO 4 HOURS IN COLD WEATHER AFTER COMPLETING FINISHING OF SLAB IN THAT JOINT LOCATION.
4. EXTEND SAWED JOINT TO THE SLAB BOUNDARIES AND ABUTMENTS, INCLUDING COLUMNS, DRAINS AND OTHER PENETRATIONS IN THE PATH OF A DEFINED JOINT. IMPLEMENT METHODS AND TIMING OF THE SAW CUT BEYOND THE LIMITS OF THE SOFF-CUT SAW REACH TO PROVIDE A CONSISTENT DEPTH OF CUT WITH MINIMAL RAVELING OF JOINT EDGES.

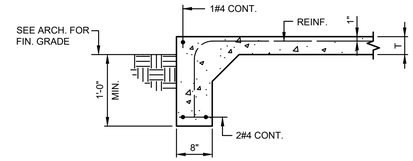

TYPICAL TURNDOWN SLAB DETAIL

NOTE:
T = SLAB THICKNESS (SEE PLAN)

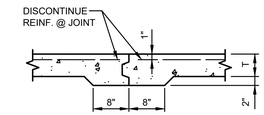

TYPICAL KEYED CONTROL JOINT

NOTES:
1. T = SLAB THICKNESS (SEE PLAN)
2. SEE PLAN FOR LOCATION OF JOINTS

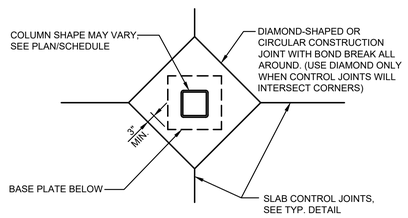

PLAN VIEW

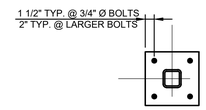

BP-1

TYPICAL BASE PLATE DETAILS

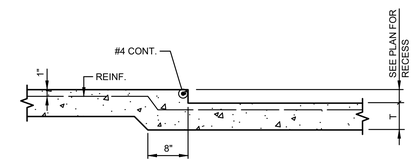

8" AND LESS

TYPICAL SLAB RECESS @ SLAB ON GRADE

NOTES:
1. T = SLAB THICKNESS (SEE PLAN)
2. SEE PLAN FOR LOCATION OF SLAB DEPRESSION

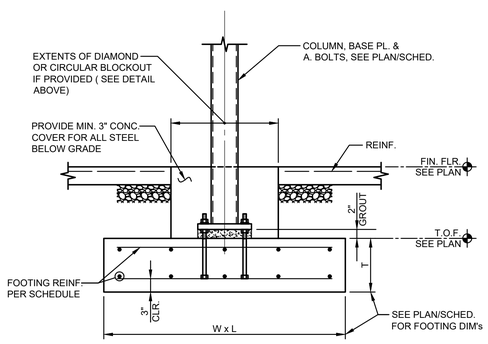

SECTION VIEW (NO PEDESTAL)

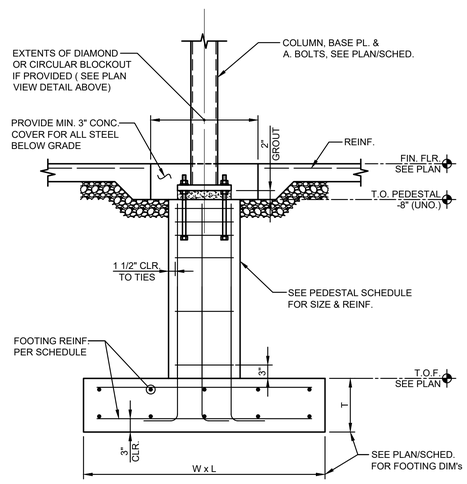

SECTION VIEW (WITH PEDESTAL)

TYPICAL COLUMN FOOTING DETAILS

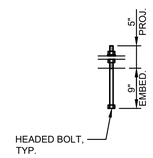

AB-1

TYPICAL ANCHOR BOLT DETAILS

USE ASTM F1554 GRADE 55 WITH WELDABILITY SUPPLEMENT
S1 FOR ALL ANCHOR BOLTS UNO.

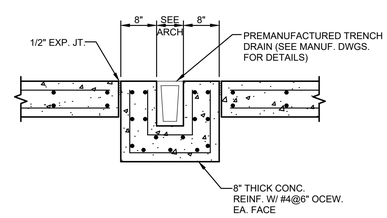

TYPICAL TRENCH DRAIN DETAIL

NOTE:
SEE ARCH. DWGS. FOR LOCATIONS

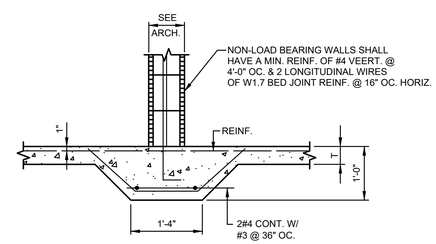

TYPICAL THICKENED SLAB @ NON-LOAD BEARING MASONRY PARTITIONS

NOTES:
1. T = SLAB THICKNESS (SEE PLAN FOR SLAB CONSTRUCTION)
2. COORD. LOCATION OF NON-LOAD BEARING MASONRY PARTITIONS W/ ARCH.

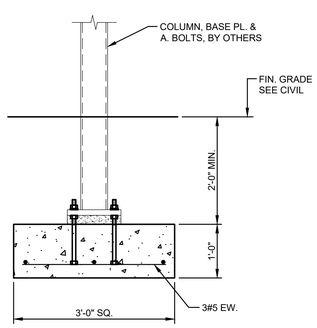

TYPICAL CANOPY COLUMN FOOTING DETAIL

STATE OF ALABAMA
THOMAS M. McELRATH
3072
GADSDEN, ALABAMA
REGISTERED ARCHITECTS

THOMAS M. McELRATH, ARCHITECT
ARCHITECTURE and SPACE PLANNING
717 MERIT SPRINGS ROAD
GADSDEN, ALABAMA 35901
PHONE: (256) 490-8244
EMAIL: TOM@TMM-ARCHITECT.COM

A NEW FIRE STATION NO. 1
located at
3170 Highway 77
for the
City of Southside, Alabama

TYPICAL DETAILS

DRAWN	KLO
CHECKED	KLO
SCALE	AS NOTED
DATE	NOVEMBER 15, 2021
FILE	
JOB NO.	21-01
REVISIONS	

STATE OF ALABAMA
LICENSED
No. 19873
PROFESSIONAL
11/15/21
KEITH L. OWENS

MBA ENGINEERS, INC.
STRUCTURAL CIVIL GEOTECHNICAL

SHEET
S1.2
OF
SHEETS

FILE: 21087-PLANS.dwg TAB:S1.2 PD:11/4/2005 11:04 AM PB:Troy Polst

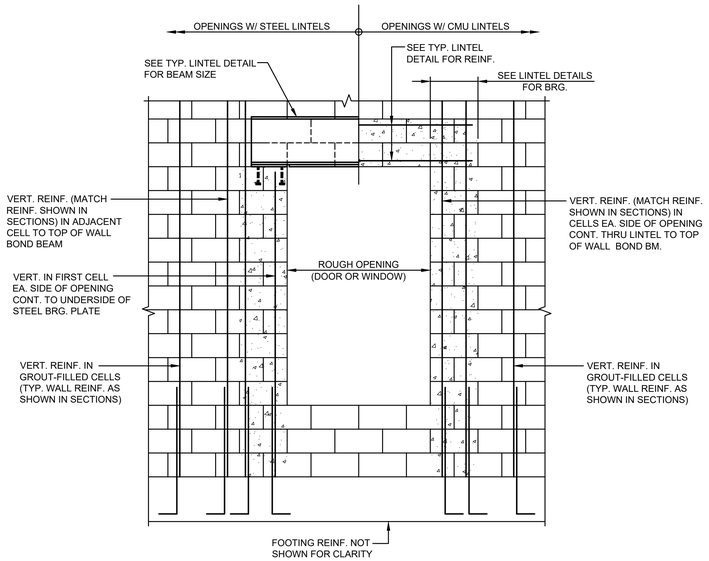

TYPICAL REINF. @ MASONRY WALL OPENINGS

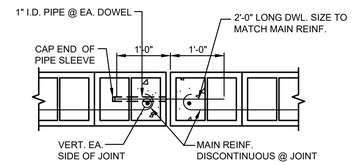

TYPICAL WALL CONTROL JOINT DETAIL AT U-BLOCK FILLED WITH CONCRETE OR AT CONCRETE BEAM

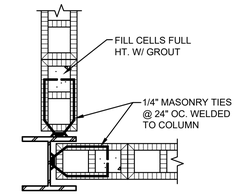

TYPICAL MASONRY COLUMN ATTACHMENT

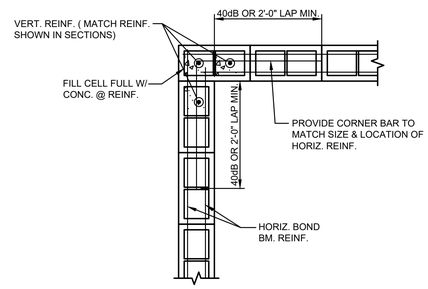

TYPICAL CORNER MASONRY WALL REINF. DETAIL

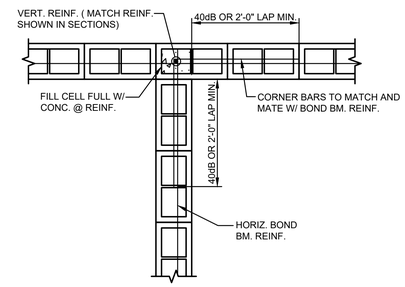

TYPICAL INTERSECTION MASONRY WALL REINF. DETAIL

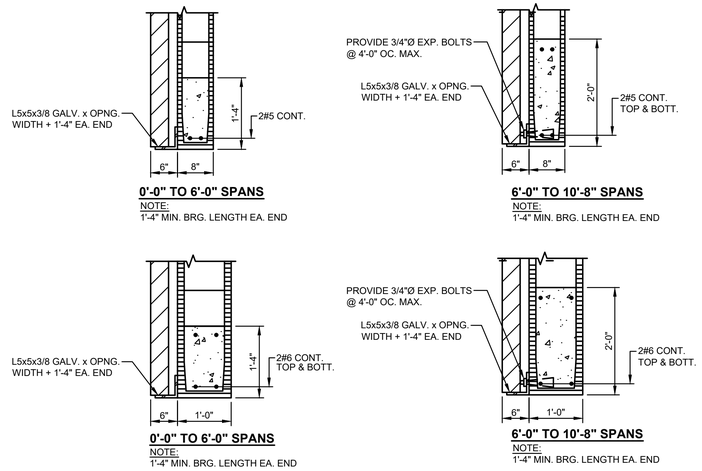

TYPICAL LOAD BEARING WALL LINTEL DETAILS (U.N.O.)

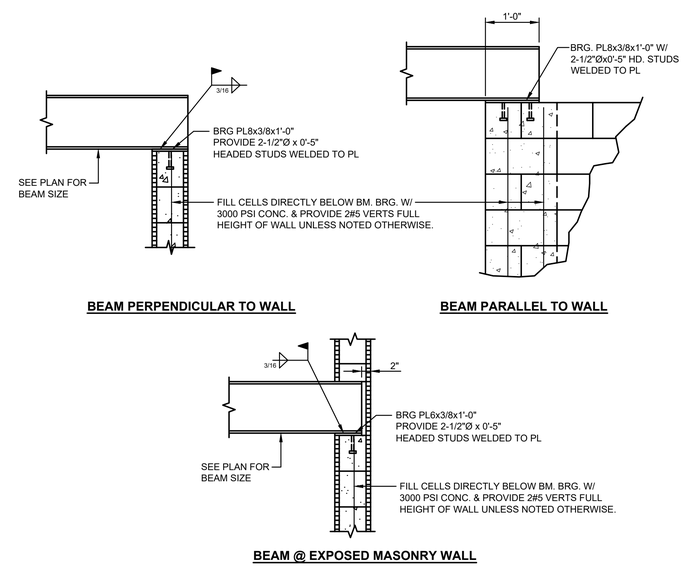

TYPICAL STEEL BEAM BEARING ON MASONRY WALL DETAILS

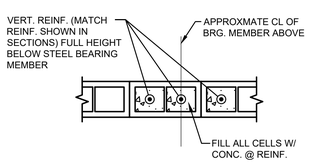

TYPICAL WALL REINF. BELOW BEARING MEMBER DETAIL

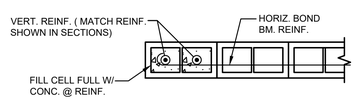

TYPICAL JAMB AND END OF MASONRY WALL REINF. DETAIL

STATE OF ALABAMA
THOMAS M. McELRATH
3072
GADSDEN, ALABAMA
REGISTERED ARCHITECTS

THOMAS M. McELRATH, ARCHITECT
ARCHITECTURE and SPACE PLANNING
717 MERIT SPRINGS ROAD
GADSDEN, ALABAMA 35901
PHONE: (256) 490-8244
EMAIL: TOM@TMM-ARCHITECT.COM

A NEW FIRE STATION NO. 1
located at
3170 Highway 77
for the
City of Southside, Alabama

TYPICAL DETAILS

DRAWN	KLO
CHECKED	KLO
SCALE	AS NOTED
DATE	NOVEMBER 15, 2021
FILE	
JOB NO.	21–01
REVISIONS	

STATE OF ALABAMA
LICENSED
No. 19873
PROFESSIONAL
11/15/21
KEITH L. OWENS

MBA ENGINEERS, INC.
STRUCTURAL CIVIL GEOTECHNICAL

SHEET
S1.3
OF
SHEETS

FILE: 21087-PLANS.dwg TAB:S1.3 PD:11/4/2005 11:04 AM PB:Troy Polst

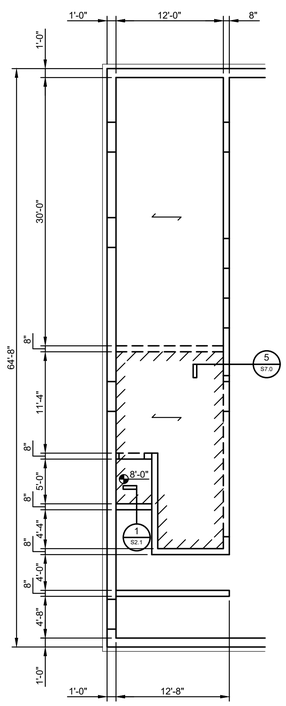

N

MEZZANINE FRAMING PLAN

1/8" = 1'-0" FIN. FLR. ELEV. 11'-4" U.N.O.

SLAB CONSTRUCTION:
5" CONC. SLAB ON 3", 20 GA. GALV., COMPOSITE METAL DECKING. REINF. W/ #5@8" OCEW.

NOTE:
SHORE SLAB UNTIL CONC. REACHES DESIRED STRENGHT.

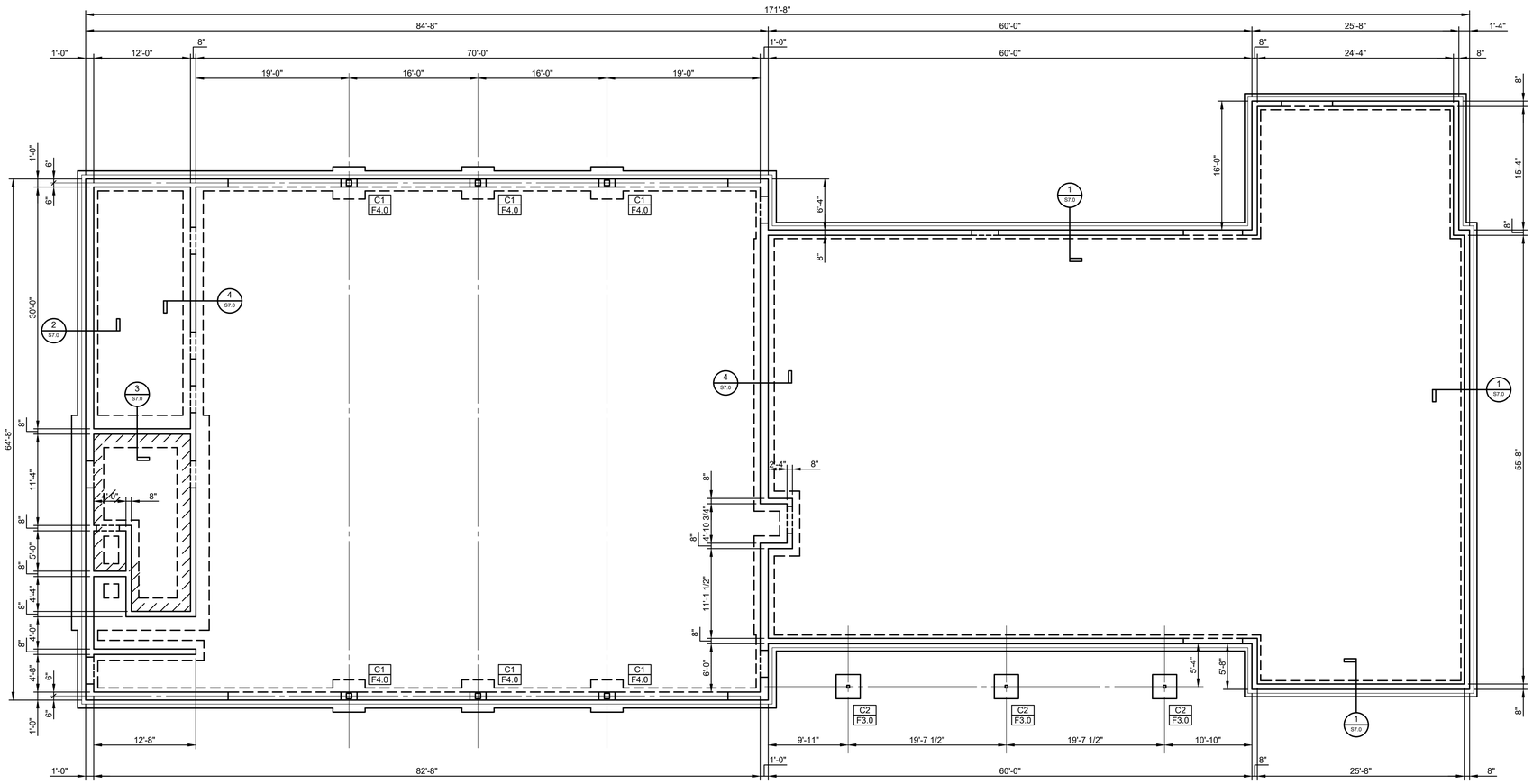

N

FOUNDATION & FLOOR PLAN

1/8" = 1'-0" FIN. FLR. ELEV. 0'-0"

TYPICAL FLOOR CONSTRUCTION:
4" CONC. SLAB ON DRAINAGE FILL
REINF. W/ 6x6-W2.1xW2.1 W.W.R.

APPARATUS FLOOR CONSTRUCTION:
8" CONC. SLAB ON DRAINAGE FILL
REINF. W/ #5@12" OCEW. TOP & BOTTOM.

NOTES:
1. TOP OF FOOTINGELEV. (-2'-0") BELOW FIN. FLR. U.N.O.
2. SHADED AREA DENOTES STORM SHELTER.

FOOTING SCHEDULE

MARK	SIZE: WxLxT	REINFORCING
F3.0	3'-0"x3'-0"x12"	3#5 EW. BOTTOM
F4.0	4'-0"x4'-0"x12"	4#5 EW. BOTTOM

COLUMN SCHEDULE

MARK	SIZE	BASE PLATE	BASE PLATE DETAIL	ANCHOR BOLTS	ANCHOR BOLTS DETAIL	REMARKS
C1	HSS8x8x3/8	14x1x1'-2"	BP-1	4-3/4"Ø	AB-1	
C2	HSS4x4x1/4	12x1x1'-0"	BP-1	4-3/4"Ø	AB-1	

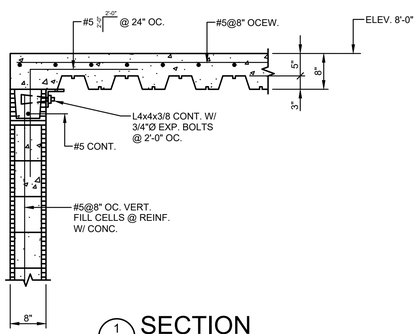

1 S2.1 **SECTION**
3/4" = 1'-0"

FILE: 21087-PLANS.dwg TAB:S2.1 PD:11/4/2005 11:04 AM PB:Troy Polst

STATE OF ALABAMA
THOMAS M. McELRATH
3072
GADSDEN, ALABAMA
REGISTERED ARCHITECTS

THOMAS M. McELRATH, ARCHITECT
ARCHITECTURE and SPACE PLANNING
717 MERIT SPRINGS ROAD
GADSDEN, ALABAMA 35901
PHONE: (256) 490-8244
EMAIL: TOM@TMM-ARCHITECT.COM

A NEW FIRE STATION NO. 1
located at
3170 Highway 77
for the
City of Southside, Alabama

FOUNDATION & FLOOR PLAN, MEZZANINE FRAMING PLAN

DRAWN	KLO
CHECKED	KLO
SCALE	AS NOTED
DATE	NOVEMBER 15, 2021
FILE	
JOB NO.	21-01
REVISIONS	

STATE OF ALABAMA
LICENSED
No. 19873
PROFESSIONAL
ENGINEER
11/15/21
KEITH L. OWENS

MBA ENGINEERS, INC.
STRUCTURAL CIVIL GEOTECHNICAL

SHEET
S2.1
OF
SHEETS

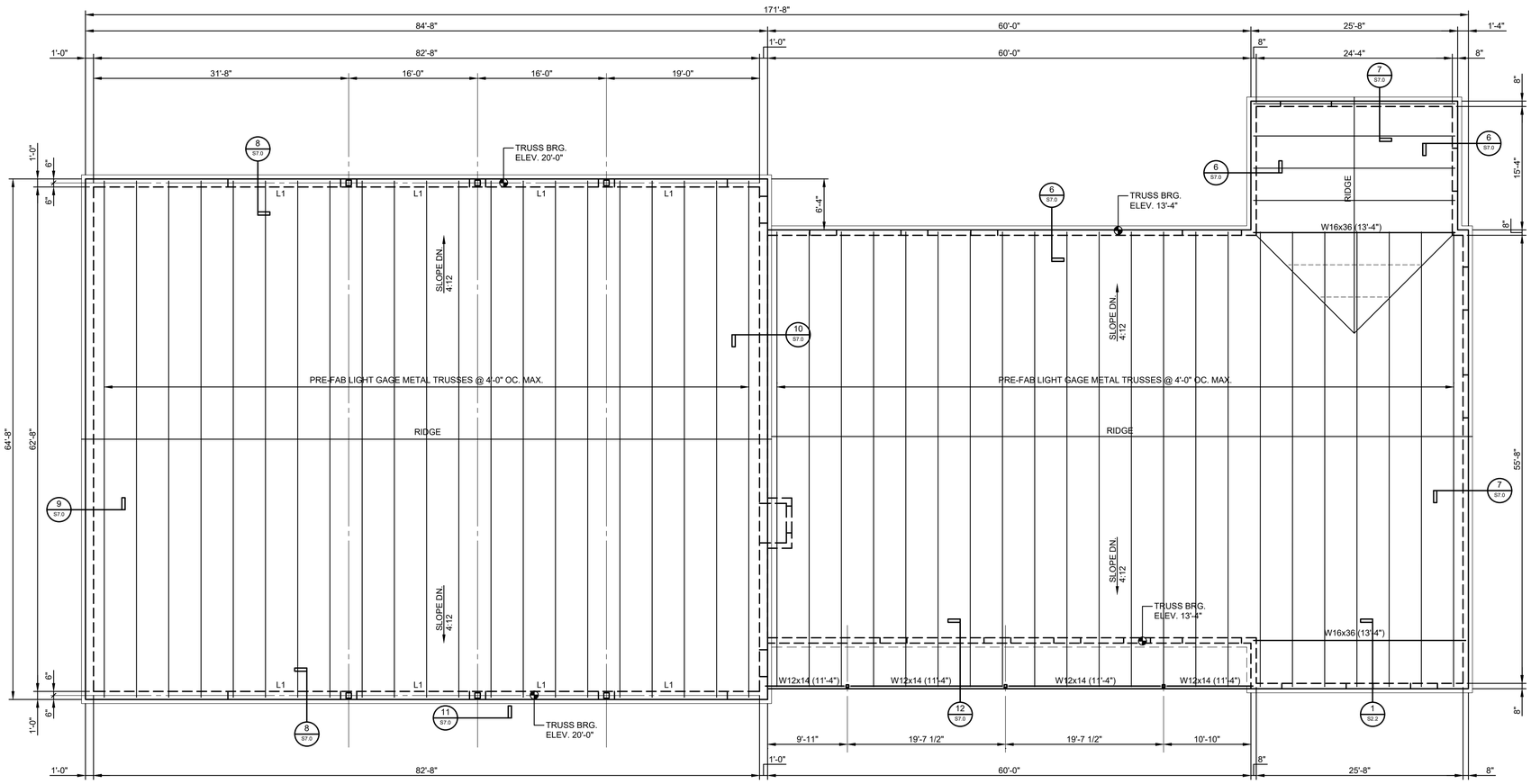

ROOF FRAMING PLAN

1/8" = 1'-0"

ROOF CONSTRUCTION:
1 1/2", 20 GA. GALV., WIDE RIB (TYPE "B") METAL ROOF DECK.

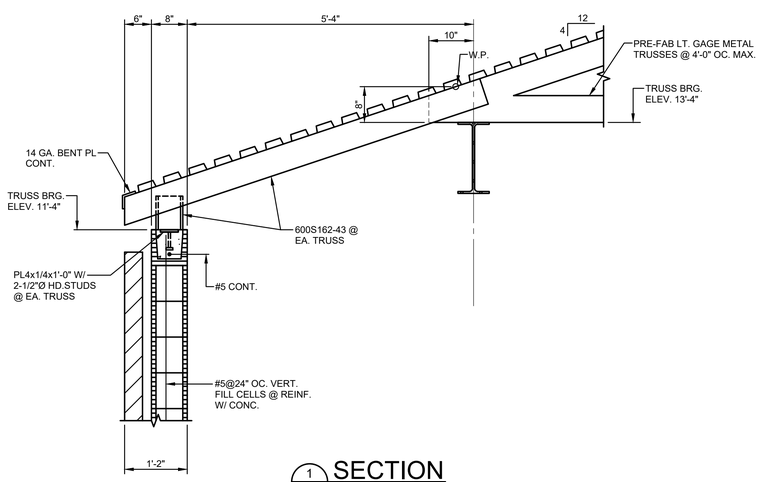

SECTION

1 / S2.2

3/4" = 1'-0"

STATE OF ALABAMA
THOMAS M. McELRATH
3072
GADSDEN, ALABAMA
REGISTERED ARCHITECTS

THOMAS M. McELRATH, ARCHITECT
ARCHITECTURE and SPACE PLANNING
717 MERIT SPRINGS ROAD
GADSDEN, ALABAMA 35901
PHONE: (256) 490-8244
EMAIL: TOM@TMM-ARCHITECT.COM

A NEW FIRE STATION NO. 1
located at
3170 Highway 77
for the
City of Southside, Alabama

ROOF FRAMING PLAN

DRAWN	KLO
CHECKED	KLO
SCALE	AS NOTED
DATE	NOVEMBER 15, 2021
FILE	
JOB NO.	21–01
REVISIONS	

STATE OF ALABAMA
LICENSED
No. 19873
PROFESSIONAL
11/15/21
KEITH L. OWENS

MBA ENGINEERS, INC.
STRUCTURAL CIVIL GEOTECHNICAL

SHEET S2.2 OF SHEETS

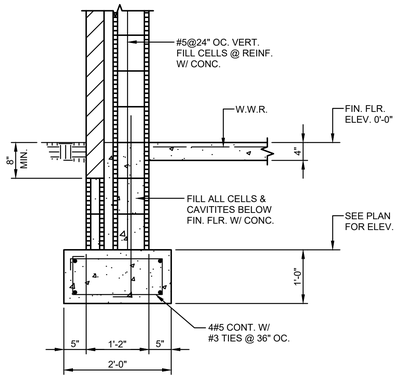

1 S7.0 SECTION
3/4" = 1'-0"

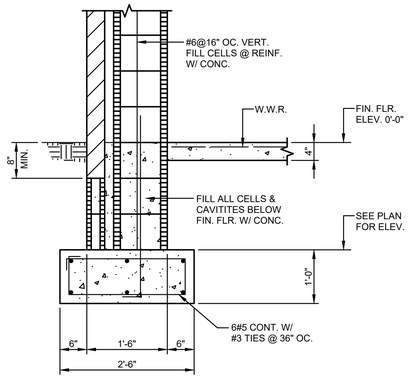

2 S7.0 SECTION
3/4" = 1'-0"

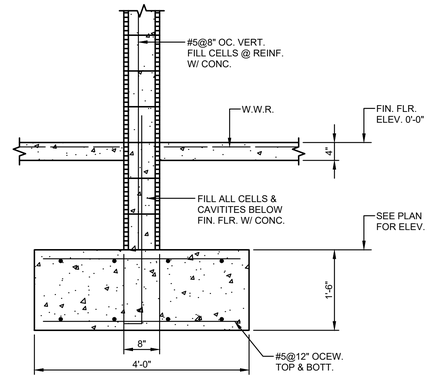

3 S7.0 SECTION
3/4" = 1'-0"

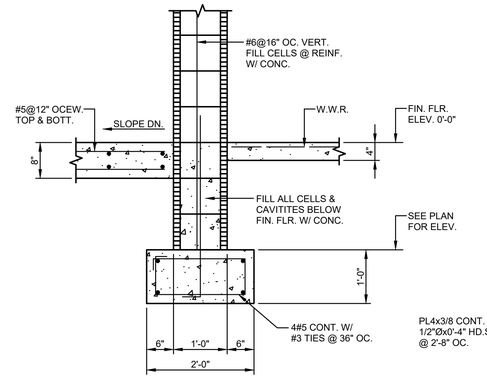

4 S7.0 SECTION
3/4" = 1'-0"

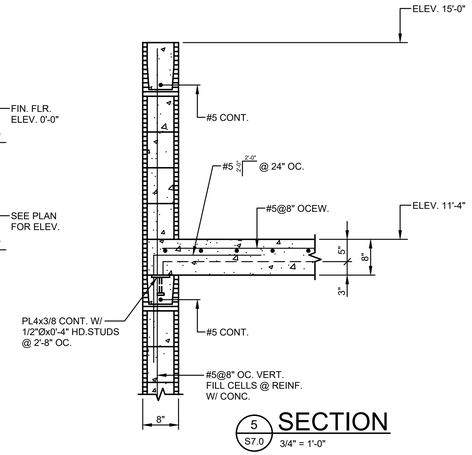

5 S7.0 SECTION
3/4" = 1'-0"

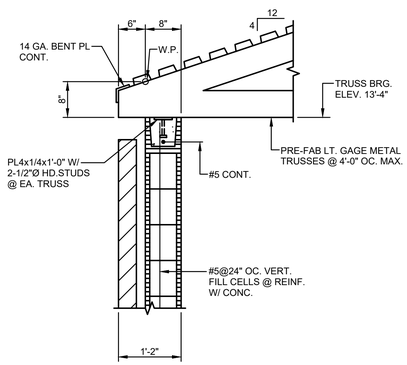

6 S7.0 SECTION
3/4" = 1'-0"

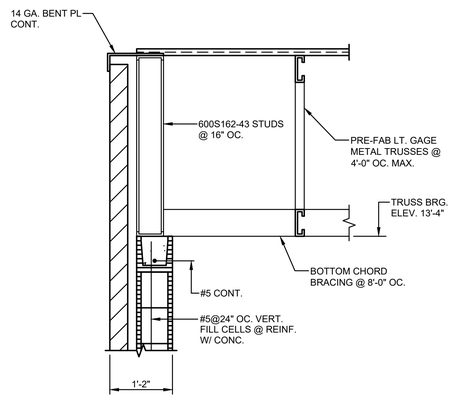

7 S7.0 SECTION
3/4" = 1'-0"

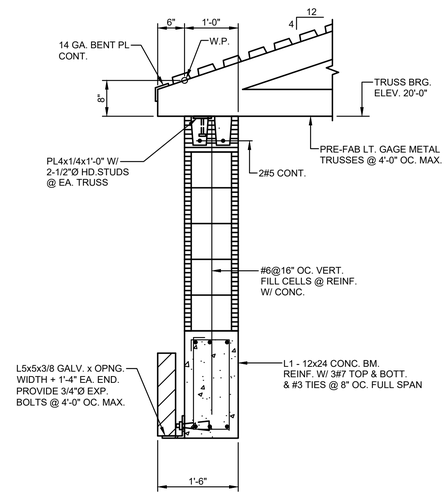

8 S7.0 SECTION
3/4" = 1'-0"

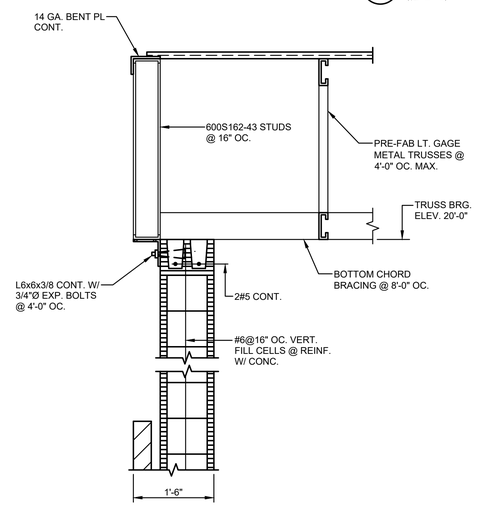

9 S7.0 SECTION
3/4" = 1'-0"

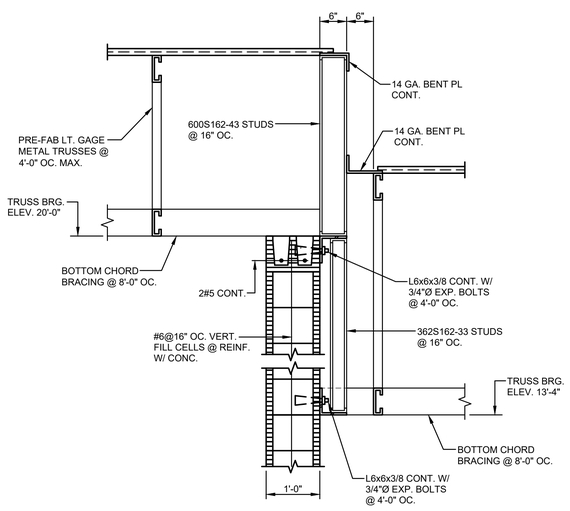

10 S7.0 SECTION
3/4" = 1'-0"

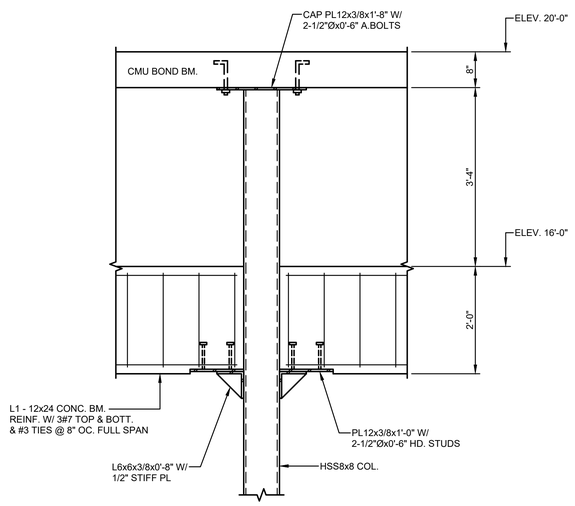

11 S7.0 SECTION
3/4" = 1'-0"

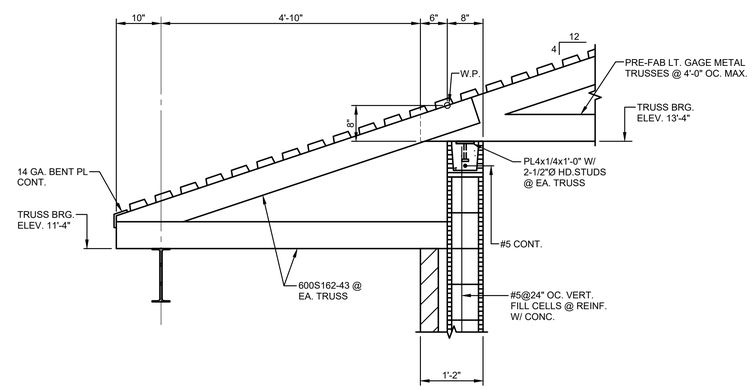

12 S7.0 SECTION
3/4" = 1'-0"

THOMAS M. McELRATH, ARCHITECT
ARCHITECTURE and SPACE PLANNING
717 MERIT SPRINGS ROAD
GADSDEN, ALABAMA 35901
PHONE: (256) 490-8244
EMAIL: TOM@TMM-ARCHITECT.COM

A NEW FIRE STATION NO. 1
located at
3170 Highway 77
for the
City of Southside, Alabama

SECTIONS

DRAWN	KLO
CHECKED	KLO
SCALE	AS NOTED
DATE	NOVEMBER 15, 2021
FILE	
JOB NO.	21–01
REVISIONS	

MBA ENGINEERS, INC.
STRUCTURAL CIVIL GEOTECHNICAL

FILE:21087-PLANS.dwg TAB:S7.0 PD:11/4/2005 11:04 AM PB:Troy Point

FIRE PROTECTION GENERAL NOTES

1. CONTRACTOR SHALL VERIFY EXISTING CONDITIONS PRIOR TO BID. CONTRACTOR SHALL VERIFY EXACT SIZE, LOCATION, ELEVATION OF EXISTING STRUCTURE, CEILINGS, MECHANICAL, AND ELECTRICAL PRIOR TO INSTALLING ANY NEW PIPE.
2. CONTRACTOR SHALL COORDINATE ALL PIPE ROUTING TO AVOID CONFLICTS WITH ALL STRUCTURAL, ELECTRICAL, AND MECHANICAL FEATURES OF THE BUILDING.
3. ALL HORIZONTAL PIPING IS RAN ABOVE THE CEILING OR IN JOIST SPACE. ALL PIPING SHALL DRAIN DOWN AS REQUIRED BY NFPA 13. PIPING TO BE INSTALLED TO CONCEAL AS MUCH AS POSSIBLE.
4. INSTALL ALL FIRE PROTECTION MATERIALS IN AREAS WITH EXPOSED CEILINGS IN A NEAT FIRST CLASS MANNER. ALL WORKMANSHIP SHALL BE IN ACCORDANCE WITH INDUSTRY BEST PRACTICES. PIPING SHALL BE INSTALLED PARALLEL AND/OR PERPENDICULAR TO BUILDING STRUCTURE UNLESS INDICATED OTHERWISE.
5. CONTRACTOR IS RESPONSIBLE FOR NOTIFYING PROJECT ENGINEERS FOR INSPECTION AND TESTING. PROVIDE A MINIMUM OF A WEEK.
6. CONTRACTOR TO REFER TO ARCHITECTURAL DRAWINGS FOR NEW WORK AREAS, CEILING HEIGHTS, SECTIONS, AND RATED WALLS.
7. CONTRACTOR RESPONSIBLE FOR COORDINATION OF PIPING WEIGHT AND LOCATION PRIOR TO INSTALLATION OF ANY PIPE.
8. PIPING LAYOUT AND SIZING SHOWN ON PLANS IS DIAGRAMMATIC AND SHOWN FOR SPACE REQUIREMENTS. CONTRACTOR IS RESPONSIBLE FOR LAYOUT SHOP DRAWINGS, CALCULATIONS, SUBMITTAL DATA, TESTING, OWNER TRAINING AND CERTIFYING SYSTEM MEETS NFPA 13 AND CONTRACT DOCUMENTS.
9. CONTRACTOR SHALL OBTAIN APPROVAL FROM ARCHITECT PRIOR TO INSTALLING ANY SPRINKLER HEADS DIFFERENT FROM THE SPECIFIED SPRINKLERS HEADS.
10. CONTRACTOR SHALL OBTAIN APPROVAL OF "SPRINKLER HEAD TYPE" FROM ARCHITECT PRIOR TO INSTALLING ANY SPRINKLER HEADS.
11. CONTRACTOR SHALL PAINT ALL EXPOSED PIPING TO MATCH STRUCTURE. COORDINATE EXACT COLOR WITH ARCHITECT.

FIRE PROTECTION SHOP DRAWINGS AND SUBMITTALS

1. PROVIDE A NFPA 13 COMPLIANT SYSTEM TO PROVIDE COVERAGE TO NEW WORK AREA. CONTRACTOR RESPONSIBLE TO PROVIDE DETAILED SHOP DRAWINGS AND CALCULATIONS COMPLETE.
2. SHOP DRAWINGS SHALL INCLUDE:

A. A REFLECTED CEILING PLAN INDICATING LOCATION OF SPRINKLER HEADS, LIGHTS, CEILING DEVICES, GRILLES, AUDIO VISUAL AND ANY DEVICES ATTACHED TO LIFT OUT CEILINGS. ALL SPRINKLER HEADS IN LAYIN CEILINGS TO BE CENTERED IN TILES.
B. PREPARE A WORKING PIPE SHOP DRAWING BASED ON HYDRAULIC CALCULATIONS. THE PIPING DRAWINGS SHALL INDICATE THE ELEVATION OF THE PIPE, THE CONFIGURATION OF THE PIPING AND HANGERS, SIZE OF THE PIPE AND COORDINATION OF PIPING WITH OTHER DISCIPLINES, STRUCTURE AND DUCTWORK.
C. HYDRAULIC CALCULATIONS ARE TO BE PREPARED USING A FLOW TEST WITHIN 90 DAYS.
D. THE CONTRACTORS RESPONSIBLE FOR INCORPORATING LOCAL AUTHORITY HAVING JURISDICTION COMMENTS FOR COMPLIANCE.
E. ALL ADDITIONAL MATERIALS TO BE INDICATED ON SHOP DRAWINGS.
F. ALL LOW-POINT DRAIN DOWN LOCATION AND PENETRATIONS OF BUILDING STRUCTURE TO BE INDICATED ON SHOP DRAWINGS.

3. CONTRACTOR SHALL BE LICENSED IN THE STATE IN WHICH THE WORK IS PREFORMED. THE CONTRACTOR SHALL BE A NICET LEVEL III OR LEVEL IV OR SPECIAL HAZARD SUPPRESSION SYSTEMS. THE NICET LEVEL III DESIGNER SHALL BE AN EMPLOYEE OF FIRE PROTECTION CONTRACTOR.
4. ALL ELECTRICAL FIRE ALARM REQUIREMENTS TO BE COORDINATED WITH THE ELECTRICAL THE FLOW AND TAMPER SWITCHES TO BE PROVIDED UNDER FIRE PROTECTION CONTRACT. CONDUIT, ALARM WIRING AND PROGRAMMING THE RESPONSIBILITY OF THE FIRE ALARM CONTRACT AND SHALL BE COORDINATED WITH ELECTRICAL.
5. CONTRACTOR SHALL PROVIDE SHOP DRAWINGS WITHIN 45 DAYS PRIOR TO THE START OF THE SPRINKLER SYSTEM INSTALLATION.
6. HYDRAULIC CALCULATIONS AND SPRINKLER SHOP DRAWINGS SHALL BE PREPARED UNDER THE SUPERVISION OF AN ENGINEER LICENSED IN THE STATE OF ALABAMA AND BEAR HIS OR HER SEAL WITH SIGNATURE AND DATE.

FIRE PROTECTION HYDRAULIC DEMANDS

1. SPRINKLER PROTECTION
   A. ALL OFFICES, TEACHER WORKROOMS, LOBBIES, VESTIBULES, CLASSROOMS, GYMNASIUMS, CAFETERIAS, TOILETS, COMMON AREAS, CORRIDORS: LIGHT HAZARD 0.10 GPM OVER HYDRAULICALLY MOST REMOTE 1500 SQ. FT.
   B. MECHANICAL EQUIPMENT ROOMS, TRANSFORMER ROOMS, GENERAL PURPOSE STORAGE LESS THAN 100 SQ. FT.: ORDINARY HAZARD, GROUP 2, 0.20 GPM OVER HYDRAULICALLY MOST REMOTE 2000 SQ. FT.
   C. GENERAL STORAGE, STORAGE HEIGHT LIMIT LESS THAN 12FT, LIMITED COMBUSTIBLES LESS THAN 25 GALLONS: ORDINARY GROUP 1 PER NFPA 13, 0.15 GPM PER 1500 SQ. FT.
2. HYDRAULIC CALCULATION SHALL BE CALCULATED WITH 10% SAFETY FACTOR OF SUPPLY CURVE.
3. FLOW DATA TO BE RESPONSIBILITY OF CONTRACTOR.

FIRE PROTECTION FLOW DATA

HYDRANT NUMBER: UNKNOWN
STATIC PRESSURE: 54 PSI
RESIDUAL PRESSURE: 30 PSI

OUTLET COEFFICIENT: UNKNOWN
OUTLET SIZE: UNKNOWN
HYDRANT FLOW: 1162 GPM

AVAILABLE GPM@ 20 PSI: 1403.8 GPM

DATE OF TEST: DECEMBER 9, 2021
LOCATION: CAMELOT WAY AND AL-77, SOUTHSIDE, AL

CONTRACTOR RESPONSIBLE FOR WATER FLOW TEST

FIRE PROTECTION DESIGN ANALYSIS

REFER TO ARCHITECTURAL PLANS FOR COMPLIANCE NFPA 101
TYPE OF CONSTRUCTION: REFER TO ARCHITECTURAL

OCCUPANCY: REFERENCE ARCHITECTURAL LIFE SAFETY PLAN

FIRE DESIGN CODES /STANDARDS

APPLICABLE CODES AND STANDARDS:
INTERNATIONAL BUILDING CODE (IBC)
INTERNATIONAL FIRE CODE (IFC)
INTERNATIONAL PLUMBING CODE (IPC)
NATIONAL ELECTRIC CODE (NEC)
NATIONAL FIRE ALARM CODE NFPA 72
NATIONAL ENERGY CODE
NATIONAL FIRE PROTECTION ASSOCIATION (NFPA) 13,24,101

FIRE PROTECTION LEGEND

FIRE MAIN (F)	F — F
FIRE DRAIN LINE	FD — FD
BALL VALVE	
OS&Y VALVE (WITH TAMPER SWITCH)	TS — COORDINATE WITH ELECTRICAL FIRE ALARM SIGNAL TO BUILDING ALARM PANEL
FLOW SWITCH	FS — COORDINATE WITH ELECTRICAL FIRE ALARM SIGNAL TO BUILDING ALARM PANEL
	PIPE DOWN
	PIPE UP
GPM	GALLONS PER MINUTE
PSI	POUNDS PER SQUARE INCH
(S)P	FULLY RECESSED PENDENT SPRINKLER HEAD (PENDENT HEADS SHALL BE WHITE W/ WHITE ESCUTCHEON UNLESS APPROVED BY ARCHITECT)
(S)C	CONCEALED PENDENT SPRINKLER HEAD (COVER SHALL BE FACTORY PAINTED W/ COLOR APPROVED BY ARCHITECT)
(S)U	UPRIGHT SPRINKLER HEAD
SS	SIDEWALL SPRINKLER HEAD
(S)DU	DRY UPRIGHT SPRINKLER HEAD
	CONNECT TO EXISTING, FIELD VERIFY EXACT LOCATION, SIZE,
ARCHITECT TO SELECT COLORS ON ALL SPRINKLER HEADS	

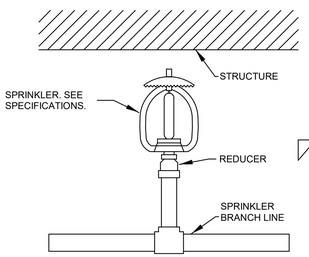

QUICK RESPONSE UPRIGHT SPRINKLER
NO SCALE

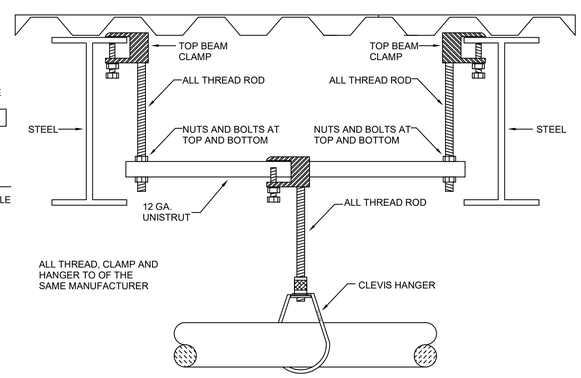

TRAPEZE HANGER DETAIL - UNISTRUT
NO SCALE

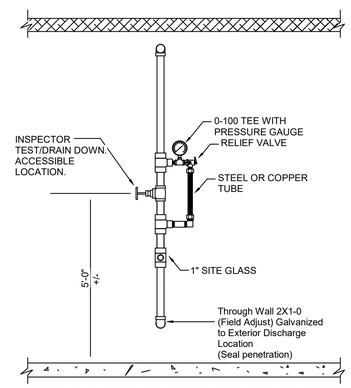

INSPECTOR'S TEST CONNECTION
NO SCALE

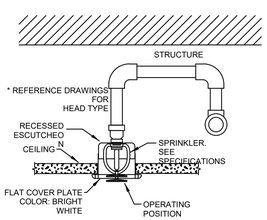

QUICK RESPONSE CONCEALED SPRINKLER
NO SCALE

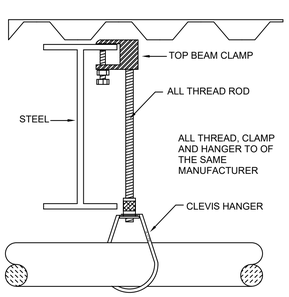

TOP BEAM CLAMP DETAIL
NO SCALE

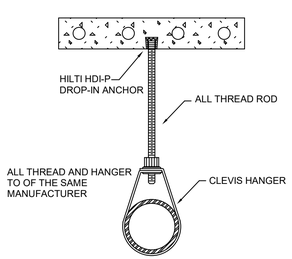

DROP-IN DETAIL
NO SCALE

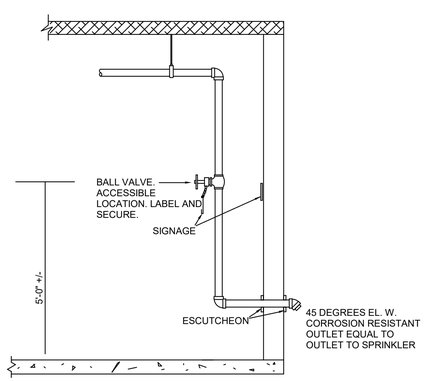

LOW POINT DRAIN DOWN DETAIL (EXTERIOR)
NO SCALE

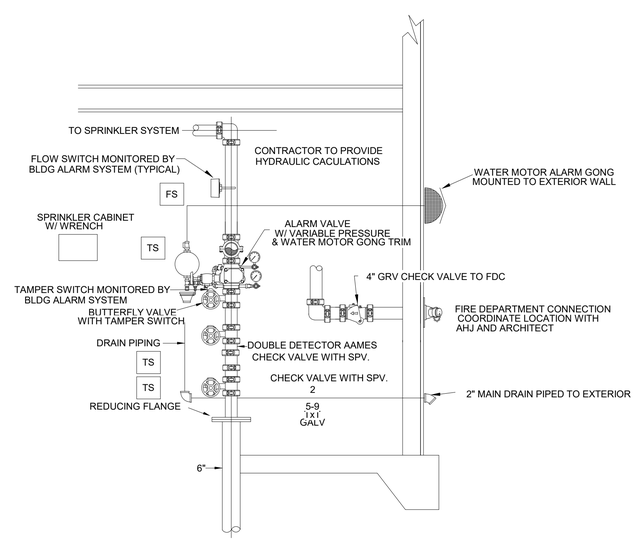

FIRE SERVICE ENTRY - BUILDING
NO SCALE

Dewberry | EDMONDS
2 Riverchase Office Plaza
Suite 205
Hoover, AL 35244
(205) 988-2069
www.dewberry.com

Project Number : 50145027

STATE OF ALABAMA
No. 24747
PROFESSIONAL
11-15-2021
ENGINEER
WADE STEWART

THOMAS M. McELRATH, ARCHITECT
ARCHITECTURE and SPACE PLANNING
717 MERIT SPRINGS ROAD
GADSDEN, ALABAMA 35901
PHONE: (256) 490-8244
EMAIL: TOM@TMM-ARCHITECT.COM

A NEW FIRE STATION NO. 1
located at
3170 Highway 77
for the
City of Southside, Alabama

FIRE PROTECTION SCHEDULE AND NOTES

DRAWN	ALV
CHECKED	SMC
SCALE	AS NOTED
DATE	NOVEMBER 15, 2021
FILE	
JOB NO.	21-01
REVISIONS	

SHEET FP0.1 OF XX SHEETS

Dewberry | EDMONDS
2 Riverchase Office Plaza
Suite 205
Hoover, AL 35244
(205) 988-2069
www.dewberry.com
Project Number :
50145027

ALABAMA LICENSED
No. 24747
PROFESSIONAL
11-15-2021
ENGINEER
WADE STEWART

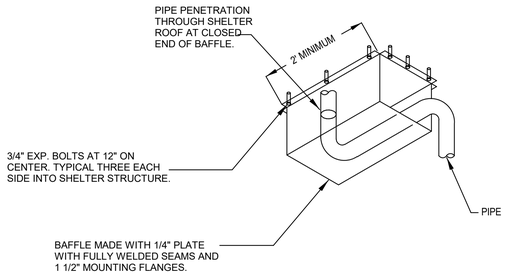

DETAIL OF PIPE PASSING THRU SHELTER ROOF/WALL

NO SCALE

SHELTER KEY NOTES

1 SHELTER PENETRATION (SEE DETAIL)

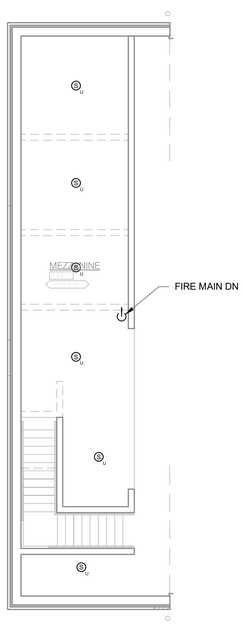

FIRE PROTECTION - MEZZANINE PLAN

SCALE: 1/8" = 1'-0"

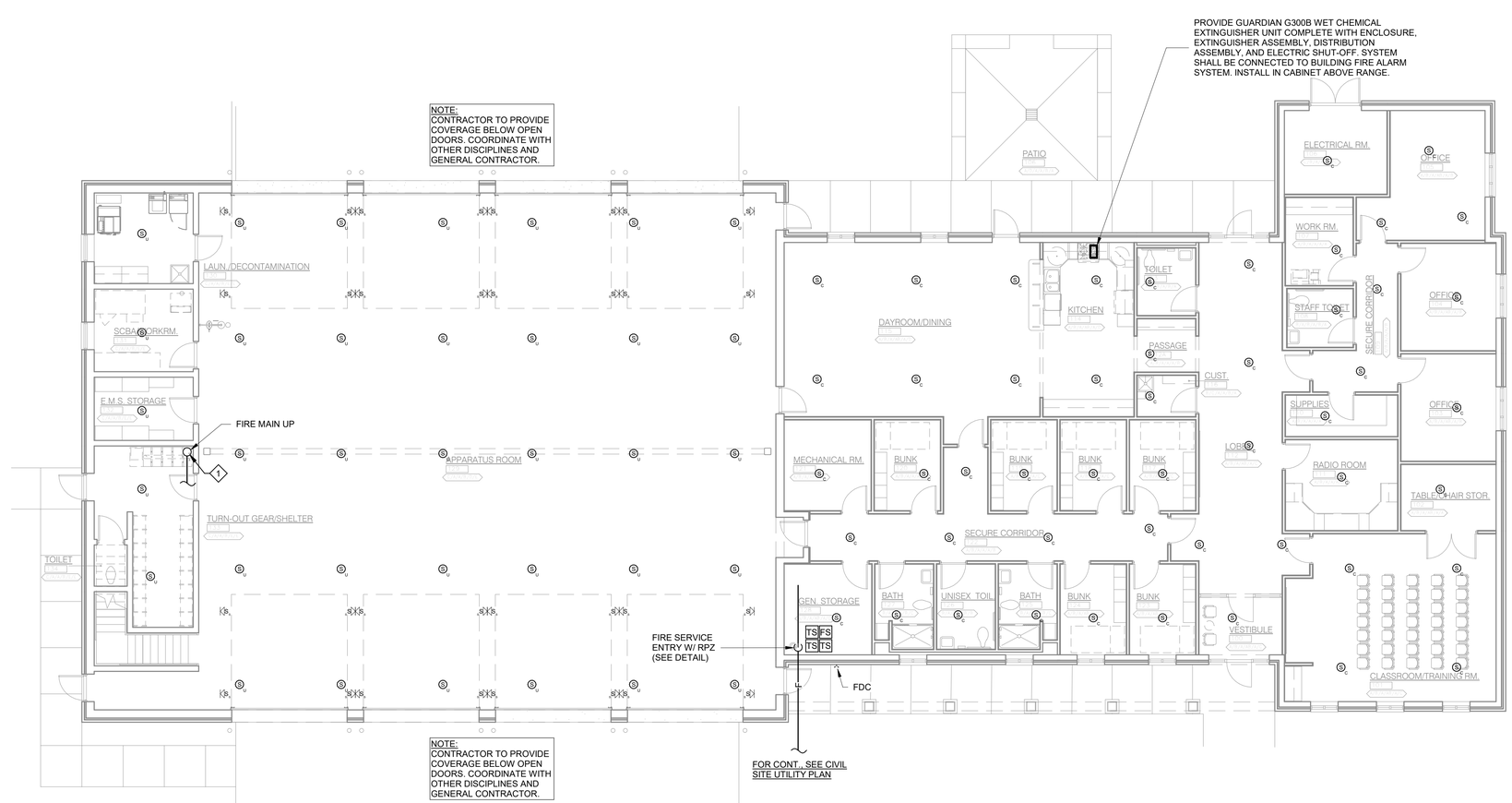

FIRE PROTECTION - FLOOR PLAN

SCALE: 1/8" = 1'-0"

PLAN NORTH

THOMAS M. McELRATH, ARCHITECT
ARCHITECTURE and SPACE PLANNING
717 MERIT SPRINGS ROAD
GADSDEN, ALABAMA 35901
PHONE: (256) 490-8244
EMAIL: TOM@TMM-ARCHITECT.COM

A NEW FIRE STATION NO. 1
located at
3170 Highway 77
for the
City of Southside, Alabama

FIRE PROTECTION FLOOR PLAN

DRAWN	ALV
CHECKED	SMC
SCALE	AS NOTED
DATE	NOVEMBER 15, 2021
FILE	
JOB NO.	21-01
REVISIONS	

SHEET
FP1.0
OF
XX
SHEETS

GENERAL NOTES

1. LOCATIONS OF UTILITIES SHOWN ON PLANS ARE APPROXIMATE. VERIFY WITH LOCAL UTILITY PRIOR TO BIDDING.
2. CONTRACTOR SHALL VERIFY EXACT LOCATION, SIZE, AND ELEVATION OF ALL EXISTING SERVICES PRIOR TO INSTALLING ANY NEW PIPE.
3. ALL OUTSIDE CLEANOUTS SHALL BE BROUGHT TO GRADE AND EMBEDDED IN 18"X18"X16" THICK CONCRETE PAD. (J.R. SMITH 4258 OR EQUAL.)
4. WHEREVER DISSIMILAR METALS ARE CONNECTED ON WATER LINES, A DIELECTRIC UNION SHALL BE USED.
5. ALL HORIZONTAL WATER AND VENT PIPING SHALL BE RUN ABOVE CEILING ON PLAN WHERE SHOWN UNLESS OTHERWISE NOTED.
6. ALL HORIZONTAL SANITARY PIPING IS RUN BELOW FLOOR ON PLAN WHERE SHOWN UNLESS OTHERWISE NOTED.
7. ALL WATER PIPING BELOW SLAB ON GRADE SHALL BE BENT UP AT ENDS SO THAT NO JOINTS OCCUR BELOW FLOOR.
8. ALL WALL HYDRANTS AND HOSE BIBBS SHALL BE MOUNTED 24" ABOVE FINISH GRADE OF FINISH FLOOR UNLESS OTHERWISE NOTED.
9. ALL WATER PIPING INSTALLED IN EXTERIOR WALLS SHALL BE LOCATED ON THE INTERIOR SIDE OF THE EXTERIOR WALL INSULATION.
10. NO VENT THRU ROOF IS TO BE LOCATED WITHIN 10 FEET OF ANY BUILDING AIR INTAKES, PER CODE. COORDINATE WITH MECHANIAL AND GENERAL CONTRACTORS.
11. DOMESTIC WATER PIPING AND FIRE PROTECTION PIPING LOCATED ABOVE THE CEILING, SHALL BE INSTALLED BELOW CEILING INSULATION.
12. CONTRACTOR SHALL COORDINATE MECHANICAL FLOOR DRAIN LOCATIONS WITH MECHANICAL EQUIPMENT PRIOR TO INSTALLATION.
13. CONTRACTOR SHALL PROVIDE SHOCK ARRESTORS ON ALL BRANCH LINES.
14. CONTRACTOR SHALL COORDINATE ALL SINKS WITH CASEWORK PRIOR TO ORDERING SINKS.
15. DOMESTIC WATER PIPING SHALL NOT BE INSTALLED IN EXTERIOR WALLS.
16. PROVIDE DISINFECTION OF WATER PIPING SYSTEM WITH CHLORINE SOLUTION AS PER CODE.
17. INSTALLATION OF BACKFLOW PREVENTER SHALL COMPLY WITH CURRENT INTERNATIONAL BUILDING CODE AND CURRENT INTERNATIONAL PLUMBING CODE.
18. ALL OVERHEAD WATER PIPING TO BE RUN BELOW INSULATION AT BOTTOM OF TRUSSES FOR FREEZE PROTECTION.
19. ALL INDIRECT DRAINS TO HAVE INSULATED DEEP SEAL P-TRAPS.
20. ALL FLOOR DRAINS AND INDIRECT DRAINS TO HAVE INSULATED DEEP SEAL P-TRAPS WITH TRAP SEAL PROTECTION AS APPROVED BY LOCAL AUTHORITY.
21. ALL WALL HYDRANTS TO BE FREEZE PROOF AND TO HAVE VACUUM BREAKERS.
22. INSULATION ON ALL PIPING SHALL MEET SMOKE/ FLAME RATING OF 25 & 50.
23. THE LOCATION OF LAVATORIES AND WATER CLOSETS RELATIVE TO THE FINISHED WALL IS CRITICAL. REFER TO ARCHITECTURAL AND THE SPECIFICATIONS FOR ADDITIONAL INFORMATION. ALL WATER CLOSETS TO BE 18" FROM FINISH WALL TO CENTER OF WATER CLOSET.
24. WATER HAMMER ARRESTORS ARE REQUIRED TO PROTECT WATER PIPING SYSTEMS WHERE QUICK-CLOSING VALVES ARE UTILIZED. WATER HAMMER ARRESTORS SHALL CONFORM TO ASSE 1010.
25. THESE DRAWINGS NOT INTENDED TO SHOW ALL POSSIBLE CONDITIONS. IT IS INTENDED THAT A COMPLETE PLUMBING SYSTEM BE PROVIDED WITH ALL NECESSARY EQUIPMENT, APPURTENANCES AND CONTROLS, COMPLETELY COORDINATED WITH ALL DISCIPLINES. ALL PARAMETERS GIVEN IN THESE DOCUMENTS SHALL BE STRICTLY CONFORMED WITH ANY ITEMS AND LABOR REQUIRED FOR A COMPLETE PLUMBING SYSTEM IN ACCORDANCE WITH ALL APPLICABLE CODES, STANDARDS AND THESE CONTRACT DOCUMENTS SHALL BE FURNISHED WITHOUT INCURRING ANY ADDITIONAL COST TO THE PROJECT, CAREFULLY REVIEW ALL CONTRACT DOCUMENTS AND THE DESIGN OF OTHER TRADES BEFORE PREPARING SHOP DRAWINGS.
26. COORDINATE PLUMBING PIPING WITH STRUCTURAL, PLUMBING, HVAC, AND ELECTRICAL. MAKE OFFSETS AND TRANSITIONS TO COORDINATE WITH OTHER TRADES WITHOUT ANY ADDITIONAL COST TO THE PROJECT.
27. COORDINATE ALL PLUMBING IN SLAB WITH BUILDING FOOTINGS.
28. NO PIPING TO BE RUN ABOVE ELECTRICAL PANELS. MAINTAIN ALL REQUIRED CLEARANCES.
29. CONTRACTOR SHALL VISIT JOB SITE AND VERIFY EXISTING CONDITIONS BEFORE SUBMITTING A PRICE, ORDERING MATERIALS OR PERFORMING ANY WORK. NOTIFY THE ARCHITECT OF ANY DEVIATION FROM PLUMBING PLAN.
30. MAINTAIN A MAXIMUM OF 55 PSIG WATER PRESSURE AT PLUMBING FIXTURES, CONSISTENT WITH ADEQUATE FLOW RATES.
31. VENTS THRU ROOF MUST BE LOCATED A MINIMUM OF 10'-0" AWAY FROM ANY OUTSIDE AIR INTAKE.
32. SUPPORT PIPE AS REQUIRED BY THE CURRENT INTERNATIONAL PLUMBING CODE.
33. ALL FOOTINGS AT PLUMBING CHASE WALLS SHALL BE MIN 24" BELOW FINISHED GRADE TO COORDINATE WITH WASTE PIPING IN SLAB.
34. FIRESTOP ALL RATED WALL AND FLOOR PENETRATIONS. SEE ARCHITECTURAL DRAWINGS FOR RATED WALL AND FLOOR LOCATIONS.
35. OFFSET ALL VTR'S TO BACKSIDE OF ROOF RIDGE.
36. DO NOT BEGIN WORK UNTIL ELEVATION OF FINAL CONNECTION POINT IS VERIFIED AND GRADING OF ENTIRE SYSTEM CAN BE DETERMINED (EVEN IF FINAL CONNECTION IS SPECIFIED UNDER ANOTHER SECTION).

PLUMBING LEGEND

	DOMESTIC COLD WATER		GAS VALVE	WH	WALL HYDRANT
	DOMESTIC HOT WATER SUPPLY		PRESSURE REDUCING VALVE	ABV	ABOVE
	DOMESTIC HOT WATER RETURN	PRV	PRESSURE RELIEF VALVE	AFF	ABOVE FINISHED FLOOR
G	GAS PIPING	RPZ BFP	REDUCED PRESSURE ZONE BFP	BFP	BACKFLOW PREVENTER
A	COMPRESSED AIR	CO	CLEANOUT	BFF	BELOW FINISHED FLOOR
	SOIL, WASTE, OR SANITARY SEWER	FD	FLOOR DRAIN	CW	COLD WATER
	VENT	FS	FLOOR SINK	DN	DOWN
	PIPE TURNING DOWN	P-#	PLUMBING FIXTURE	WH - #	WATER HEATER
	PIPE TURNING UP	#	RISER NUMBER	GPH	GALLONS PER HOUR
	TEE DOWN	TD	TRENCH DRAIN	GPM	GALLONS PER MINUTE
	TEE UP	WHA	WATER HAMMER ARRESTOR	HW	HOT WATER
	UNION	VS	VENT STACK	HWR	HOT WATER RETURN
	BALANCE VALVE	VSTR	VENT THROUGH ROOF	TYP	TYPICAL
	BALL VALVE	MFD	MECHANICAL FLOOR DRAIN		
	CHECK VALVE	WS	WASTE STACK		
	CAP ON END OF PIPE	HB	HOSE BIBB		

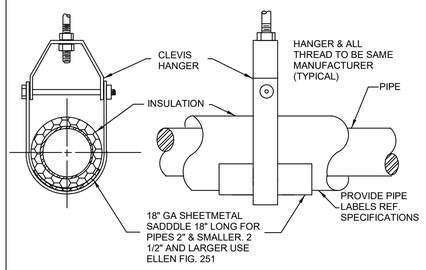

SUSPENDED PIPE SUPPORT

NO SCALE

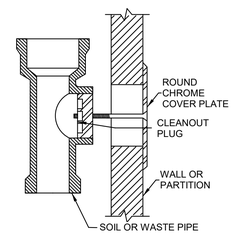

WALL CLEANOUT

NO SCALE

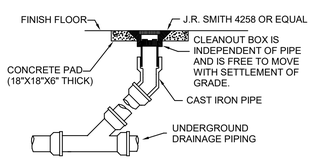

DETAIL OF CLEANOUT TO GRADE

NO SCALE

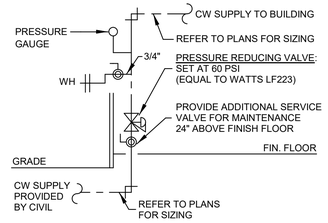

DETAIL OF WATER ENTRY

NO SCALE

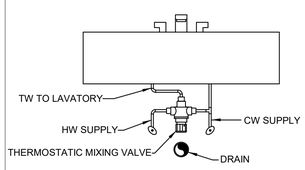

DETAIL OF TMV BELOW LAVATORY

NO SCALE

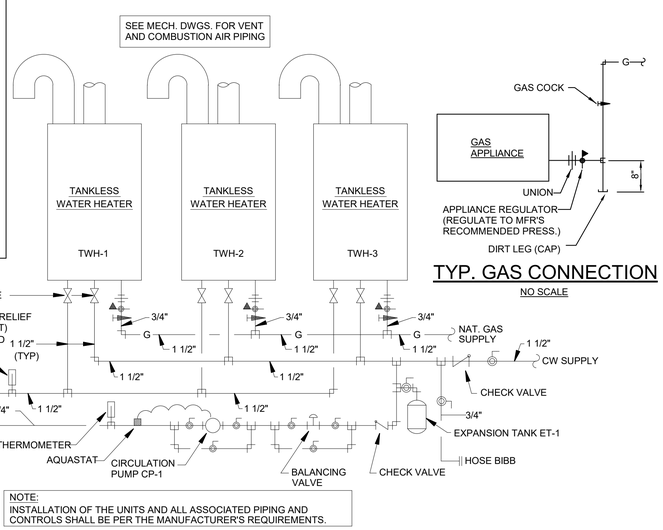

NOTE:
INSTALLATION OF THE UNITS AND ALL ASSOCIATED PIPING AND CONTROLS SHALL BE PER THE MANUFACTURER'S REQUIREMENTS.

DETAIL of PIPING at TANKLESS WATER HEATERS - TWH - (1-3)

NO SCALE

TYP. GAS CONNECTION

NO SCALE

PLUMBING FIXTURE SCHEDULE

MARK	FIXTURE	WASTE	CW	HW	REMARKS
FD	FLOOR DRAIN	3"	-	-	J.R. SMITH #2010 WITH 6" ROUND NICKEL BRONZE GRATE. PROVIDE WITH J.R. SMITH TRAP INSERT.
FS-1	FLOOR SINK	4"	-	-	J.R. SMITH #3100, 8" SQUARE, PORCELAIN ENAMELED CAST IRON INTERIOR WITH 3/4 CAST IRON PORCELAIN ENAMELED GRATE AND DOME BOTTOM STRAINERS. PROVIDE WITH J.R. SMITH TRAP INSERT.
LTD	LAUNDRY TRENCH DRAIN	4"	-	-	ZURN Z886 LAUNDRY TRENCH WITH LINT BASKET DRAIN SYSTEM WITH HEEL PROOF GRATE. PROVIDED WITH CLOSED END CAPS AND BOTTOM OUTLET. TRENCH SHALL BE ENTIRE LENGTH OF WASHING MACHINES.
MFD	MECHANICAL FLOOR DRAIN	4"	-	-	J.R. SMITH #2242 WITH SEDIMENT BUCKET. PROVIDE WITH J.R. SMITH TRAP INSERT.
OS-1	OIL/WATER SEPARATOR				J.R. SMITH #8599-50-100 COMPLETE WITH ANCHOR FLANGE, INSTALLATION SHALL COMPLY WITH REQUIREMENTS OF AUTHORITY HAVING JURISDICTION. PROVIDE 12" EXTENSION IF REQUIRED FOR INSTALLATION. PROVIDE CLEAN-OUT ACCESS. PROVIDE HIGH LEVEL SENSOR AND CONTROL PANEL.
P-1	WATER CLOSET - ADA COMPLIANT	4"	1"	-	FLOOR MOUNTED - KOHLER K-96057-SS-0 COMPLETE SLOAN ROYAL #111 FLUSH VALVE WITH YJ BRACKET AND CHURCH "DURA GUARD" MODEL #2155 SSC SEAT.
P-2	LAVATORY - ADA COMPLIANT	1 1/4"	1/2"	1/2"	WALL HUNG - KOHLER K-2032 (20" X 18") COMPLETE, SYMMONS S-20-0 FAUCET, K7715 OUTLET WITH TAILPIECE, J.R. SMITH #700-M31-Z FIXTURE SUPPORT, MCGUIRE #165 SUPPLIES WITH STOPS AND MCGUIRE #8872 P-TRAP. INSULATE P-TRAP, STOPS AND SUPPLIES WITH "PRO-WRAP" BY MCGUIRE. MOUNT WITH RIM MAXIMUM 34" AFF. PROVIDE LAWLER 570 THERMOSTATIC MIXING VALVE MOUNTED BELOW LAVATORY. RUN 100° F WATER TO FAUCET. MUST MEET A.D.A. GUIDELINES.
P-3	MOP SINK	3"	1/2"	1/2"	STERN WILLIAMS #SBC-1700 (24" X 24") COMPLETE, T-35 HOSE WITH WALL HOOK, STAINLESS STEEL BACKSPLASH AND CHICAGO FAUCET #897 FAUCET.
P-4	DOUBLE BOWL SINK	1 1/2"	1/2"	1/2"	ELKAY LRAD-3321, LK-35 STRAINERS, SYMMONS S-23-3 FAUCET. MCGUIRE #8912 P-TRAP, CONTINUOUS WASTE OUTLET, AND #165 STOPS WITH SUPPLIES.
P-5	DISHWASHER	1 1/2"	-	1/2"	FURNISHED AND INSTALLED UNDER ANOTHER SECTION, ROUGH AND CONNECT COMPLETE. PROVIDE BALL VALVE STOP ON SUPPLY WITH SHOCK ARRESTOR PDI SIZE "A" ON HOT WATER PIPING. PIPE WASTE DISCHARGE THRU WASTE AIR GAP MOUNTED IN SPARE DRILLING IN SINK LEDGE.
P-6	WASHING MACHINE BOX (RESIDENTIAL)	2"	1/2"	1/2"	GUY GRAY # WB-200. PROVIDE SHOCK ARRESTORS PDI SIZE "B" ABOVE CEILING ON HOT AND COLD WATER LINES.
P-7	WASHING MACHINE BOX (COMMERCIAL)	LTD	3/4"	3/4"	GUY GRAY # WB-200. PROVIDE SHOCK ARRESTORS PDI SIZE "B" ABOVE CEILING ON HOT AND COLD WATER LINES. PIPE WASTE TO LAUNDRY TRENCH DRAIN.
P-8	WALL HYDRANT	-	3/4"	-	J.R. SMITH #5509-QT, WITH INTEGRAL BACKFLOW PREVENTER, LATCHING COVER, FREEZE-PROOF AND OF PROPER LENGTH FOR WALL IN WHICH INSTALLED, ALL BRONZE BOX. VALVE SEAT MUST BE ON BUILDING SIDE OF EXTERIOR WALL INSULATION. INSTALL WITH CENTER LINE 24" ABOVE FINISH GRADE. PROVIDE OWNER WITH ONE (1) LOOSE KEY FOR EACH WALL HYDRANT.
P-9	HOSE CONNECTION	-	2"	-	CROKER 5000 SERIES ANGLE HOSE VALVE. VALVE SHALL BE COMPATIBLE WITH OWNER'S EQUIPMENT. PROVIDE 2 1/2" NTS VALVE HOSE CONNECTION. COORDINATE HOSE CONNECTION WITH OWNER.
P-10	REF. ICE MAKER BOX	-	1/2"	-	FURNISHED AND INSTALLED UNDER ANOTHER SECTION. PROVIDE IN WALL BEHIND REFRIGERATOR A GUY GRAY MODEL "B" 16 GAUGE ALL METAL BOX LESS DRAIN AND SUPPLIES. PROVIDE IN BOX A 1/2" BALL VALVE WITH 10 FEET OF 1/4" SOFT COPPER COILED IN BOX FOR CONNECTION TO REFRIGERATOR ICE MAKER.
P-11	SHOWER - ADA COMPLIANT	2"	1/2"	1/2"	CHICAGO FAUCET 1907-CP THERMOSTATIC/PRESSURE BALANCING SHOWER VALVE, 151-ACP HAND SHOWER AND 56" GRAB BAR, AND TRIM. ADJUST FOR 109°F MAXIMUM TEMP. PROVIDE BACK PLATE. PROVIDE ACRYLIC KOHLER MODEL 9479 60X36 ARCHER CENTER DRAIN W/ TILING FLANGE AND K-9132 DRAIN.
P-12	DRAIN BOX	1 1/2"	-	-	PROVIDE A SIOUX CHIEF MODEL #696-3F DRAIN BOX, #696-LC LOUVERED COVER, #696-CF SECONDARY DRAINAGE FUNNEL, AND J.R. SMITH TRAP SEAL INSERT. BOX TO COME COMPLETE WITH WALL FLANGE AND LOUVER. COORDINATE WITH MECHANICAL TO RECEIVE CONDENSATE WASTE. COORDINATE EXACT MOUNTING HEIGHT AND LOCATION WITH ARCHITECT.
P-13	EMERGENCY SHOWER/EYE WASH	1 1/2"	1"	1"	GUARDIAN GBF1909SSH FLOOR MOUNTED SAFETY STATION COMPLETE WITH BOWL, SHOWER HEAD, VALVE, AND DUST COVERS. PROVIDE WITH EMERGENCY MIXING VALVE EQUAL TO LAWLER 911E MOUNTED ON WALL ABOVE EMERGENCY SHOWER.
P-14	HOSE REEL				REELCRAFT MODEL #7850 OLP COMPLETE WITH 50 FEET OF HOSE; MAXIMUM OPERATING PRESSURE OF 300 PSI. INSTALL PER MANUFACTURER'S INSTRUCTIONS. COORDINATE LOCATION AND MOUNTING HEIGHT WITH GENERAL CONTRACTOR.
TD	TRENCH DRAIN	4"	-	-	J.R. SMITH #9930 PRE-SLOPED, POLYETHYLENE CHANNELS WITH SLOTTED GALVANIZED STEEL GRATE, SECURED TO CHANNELS, PROVIDE P-TRAP INSERT BY J.R. SMITH.

WATER HEATER SCHEDULE

MARK	FIXTURE	ELEC INFO.	GAS INPUT	REMARKS
CP-1	CIRCULATION PUMP	115V; 1/12 HP	-	ARMSTRONG COMPASS H. PROVIDE WITH HONEYWELL AQUASTAT RATED FOR 100°F-160°F AND TIMER
ET-1	EXPANSION TANK	-	-	AMTROL THERM - X-TROL #ST-5 EXPANSION TANK, PRE-CHARGED, WELDED STEEL CONSTRUCTION. ISOLATION BETWEEN WATER AND AIR SHALL BE BY A BUTYL DIAPHRAM.
TWH-1	GAS TANKLESS WATER HEATER	120V CONTROL PANEL	199.9 CFH	NAVIEN NPE-240S-NG COMMERCIAL TANKLESS COMPLETE WITH COMMERCIAL SERVICE VALVE ON BOTH INLET AND OUTLET. UNIT SHALL PROVIDE 4.4 GPM AT 90°F RISE.SET OUTLET TEMPERATURE AT 140°F. WALL MOUNT WITH ADEQUATE CLEARANCE FOR PIPING AND SERVICING. INSTALL PER MANUFACTURER'S RECOMMENDATIONS. PROVIDE WITH CONTROLS, WIRING, ETC. TO CONNECT TO OTHER WATER HEATERS. WATER HEATERS TO BE PROGRAMMED TO ALTERNATE START-UP WHEN HOT WATER IS REQUIRED.
TWH-2	GAS TANKLESS WATER HEATER	120V CONTROL PANEL	199.9 CFH	NAVIEN NPE-240S-NG COMMERCIAL TANKLESS COMPLETE WITH COMMERCIAL SERVICE VALVE ON BOTH INLET AND OUTLET. UNIT SHALL PROVIDE 4.4 GPM AT 90°F RISE.SET OUTLET TEMPERATURE AT 140°F. WALL MOUNT WITH ADEQUATE CLEARANCE FOR PIPING AND SERVICING. INSTALL PER MANUFACTURER'S RECOMMENDATIONS PROVIDE WITH CONTROLS, WIRING, ETC. TO CONNECT TO OTHER WATER HEATERS. WATER HEATERS TO BE PROGRAMMED TO ALTERNATE START-UP WHEN HOT WATER IS REQUIRED
TWH-3	GAS TANKLESS WATER HEATER	120V CONTROL PANEL	199.9 CFH	NAVIEN NPE-240S-NG COMMERCIAL TANKLESS COMPLETE WITH COMMERCIAL SERVICE VALVE ON BOTH INLET AND OUTLET. UNIT SHALL PROVIDE 4.4 GPM AT 90°F RISE.SET OUTLET TEMPERATURE AT 140°F. WALL MOUNT WITH ADEQUATE CLEARANCE FOR PIPING AND SERVICING. INSTALL PER MANUFACTURER'S RECOMMENDATIONS PROVIDE WITH CONTROLS, WIRING, ETC. TO CONNECT TO OTHER WATER HEATERS. WATER HEATERS TO BE PROGRAMMED TO ALTERNATE START-UP WHEN HOT WATER IS REQUIRED

Dewberry | EDMONDS
2 Riverchase Office Plaza
Suite 205
Hoover, AL 35244
(205) 988-2069
www.dewberry.com
Project Number : 50145027

THOMAS M. McELRATH, ARCHITECT
ARCHITECTURE and SPACE PLANNING
717 MERIT SPRINGS ROAD
GADSDEN, ALABAMA 35901
PHONE: (256) 490-8244
EMAIL: TOM@TMM-ARCHITECT.COM

A NEW FIRE STATION NO. 1
located at
3170 Highway 77
for the
City of Southside, Alabama

PLUMBING SCHEDULES AND NOTES

DRAWN	ALV
CHECKED	SMC
SCALE	AS NOTED
DATE	DECEMBER 17, 2021
FILE	
JOB NO.	21-01
REVISIONS	

SHEET P0.1 OF XX SHEETS

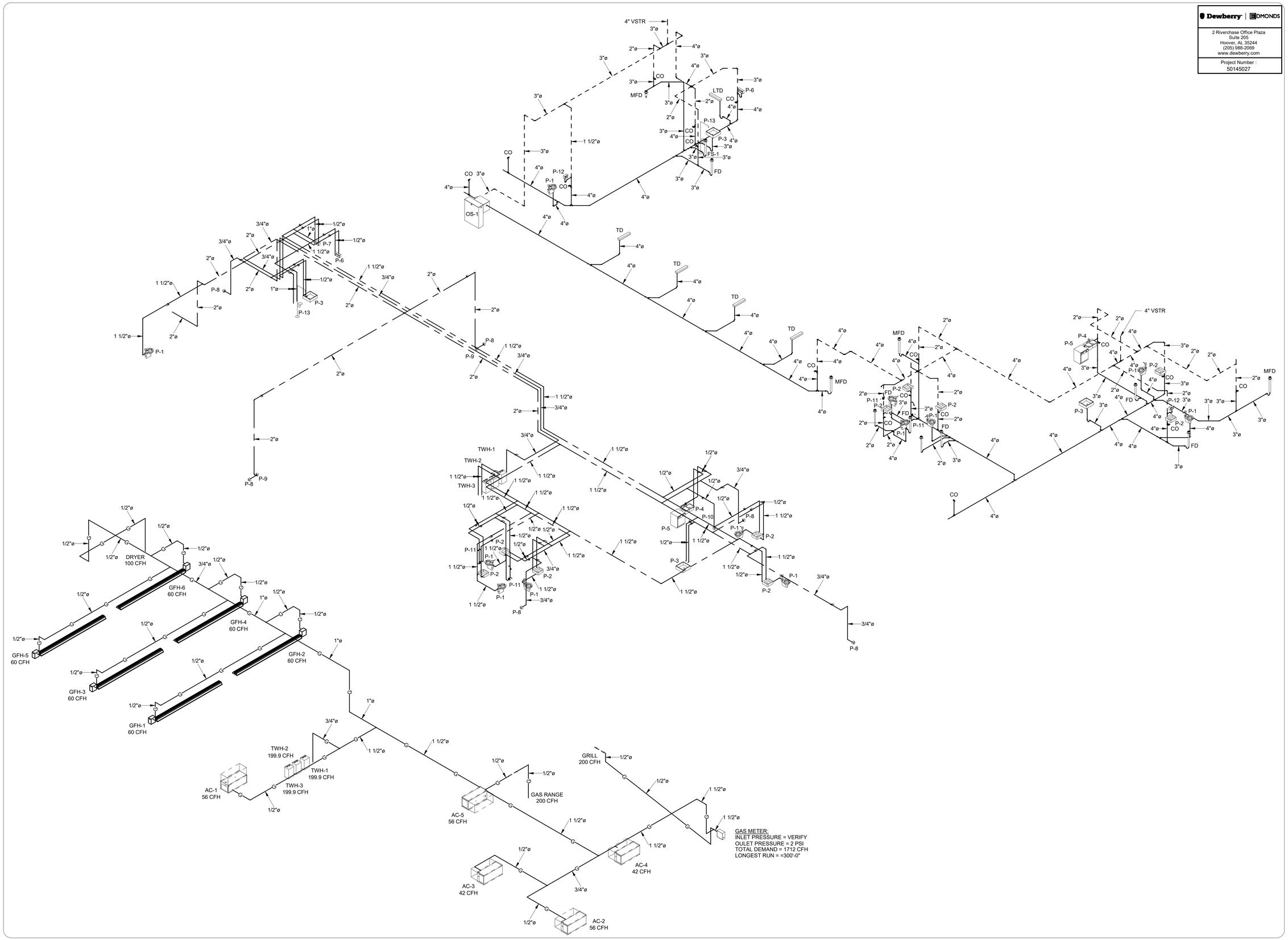

Dewberry | EDMONDS
2 Riverchase Office Plaza
Suite 205
Hoover, AL 35244
(205) 988-2069
www.dewberry.com

Project Number :
50145027

ALABAMA LICENSED
No. 24747
PROFESSIONAL
12-17-2021
ENGINEER
WADE STEWART

THOMAS M. McELRATH, ARCHITECT
ARCHITECTURE and SPACE PLANNING
717 MERIT SPRINGS ROAD
GADSDEN, ALABAMA 35901
PHONE: (256) 490-8244
EMAIL: TOM@TMM-ARCHITECT.COM

A NEW FIRE STATION NO. 1
located at
3170 Highway 77
for the
City of Southside, Alabama

PLUMBING RISERS

DRAWN	ALV
CHECKED	SMC
SCALE	AS NOTED
DATE	DECEMBER 17, 2021
FILE	
JOB NO.	21-01
REVISIONS	

SHEET
P0.2
OF
XX
SHEETS

Dewberry | EDMONDS
2 Riverchase Office Plaza
Suite 205
Hoover, AL 35244
(205) 988-2069
www.dewberry.com
Project Number :
50145027

PROFESSIONAL ENGINEER
WADE STEWART
No. 24747
11-15-2021

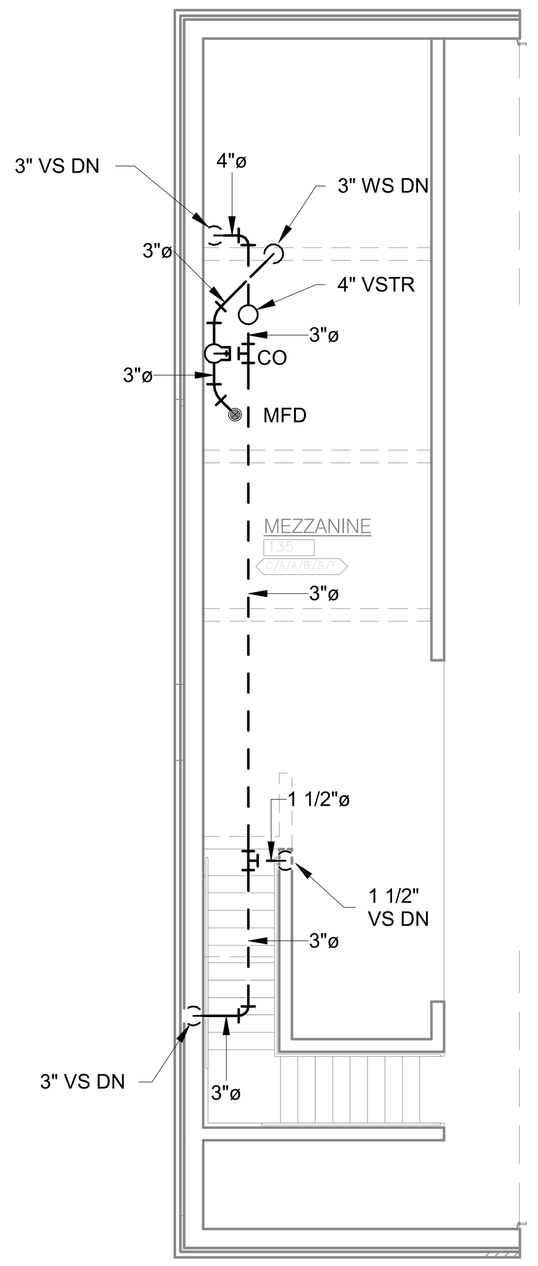

NON-PRESSURE PIPING - MEZZANINE PLAN

SCALE: 1/8" = 1'-0"

PLAN NORTH

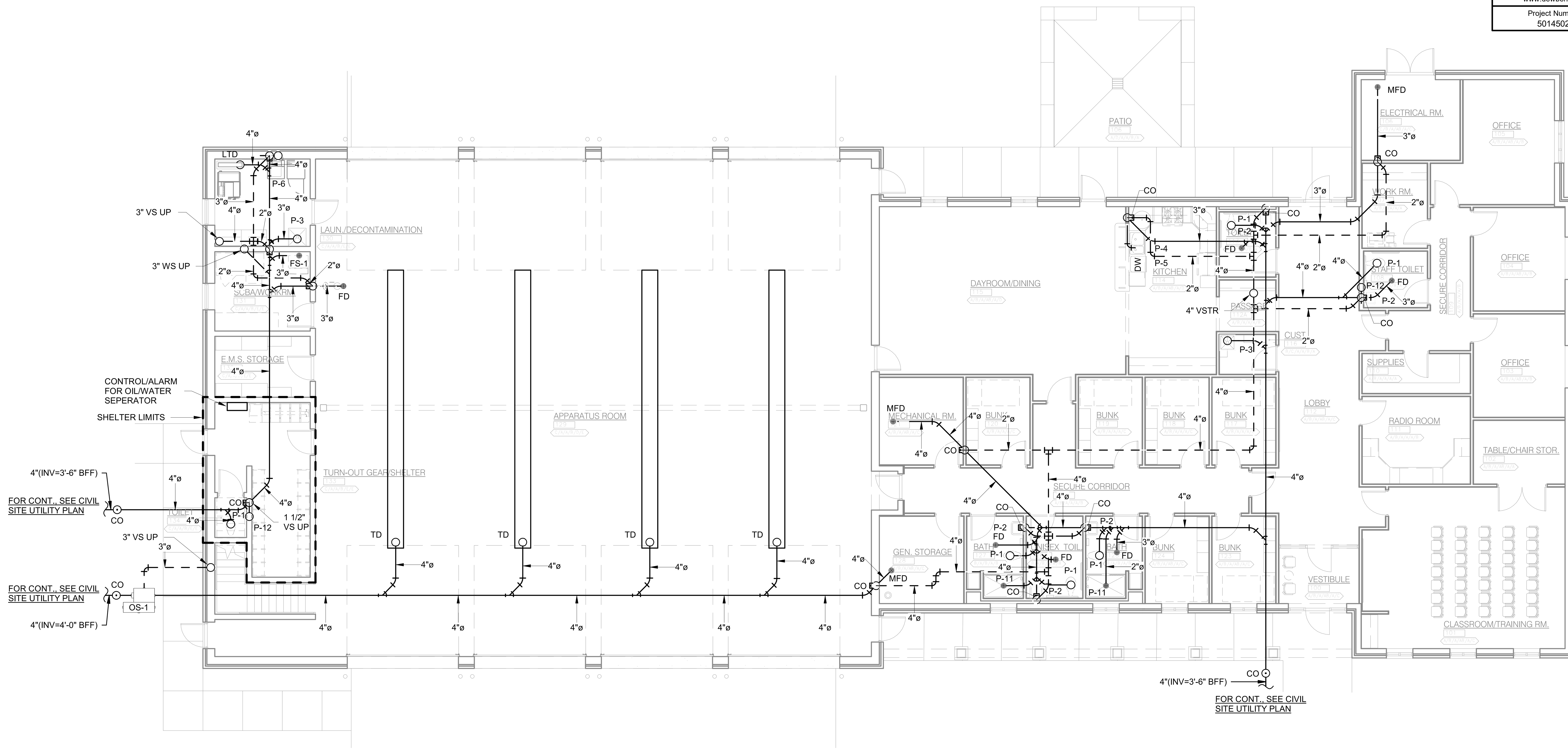

NON-PRESSURE PIPING - FLOOR PLAN

SCALE: 1/8" = 1'-0"

PLAN NORTH

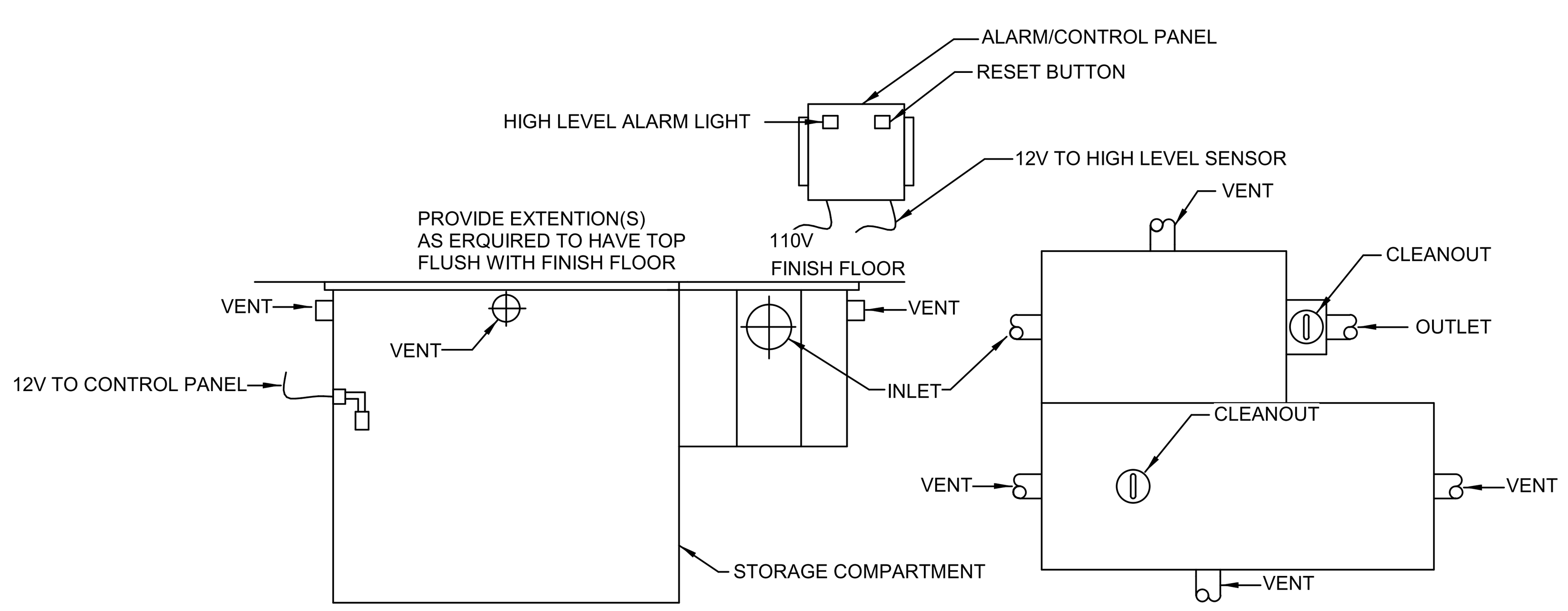

DETAIL of OIL/WATER SEPARATOR

NO SCALE

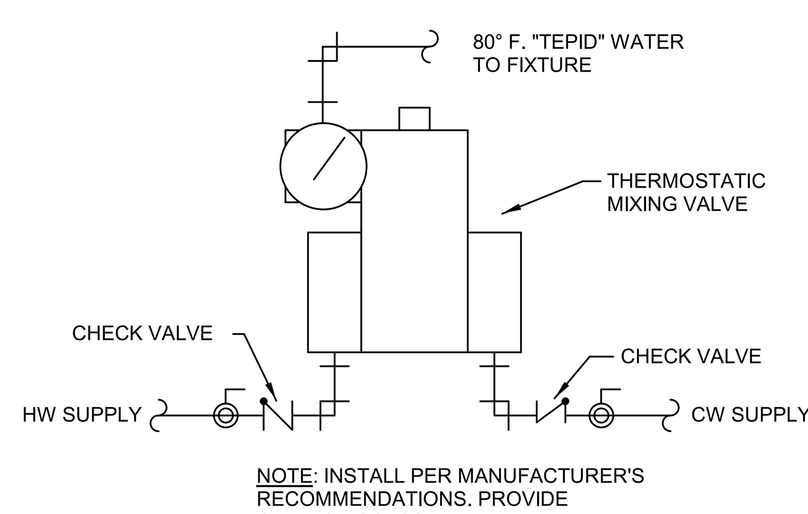

EMERGENCY THERMOSTATIC MIXING VALVE ABV. CEILING

NO SCALE

THOMAS M. McELRATH, ARCHITECT
ARCHITECTURE and SPACE PLANNING
717 MERIT SPRINGS ROAD
GADSDEN, ALABAMA 35901
PHONE: (256) 490-8244
EMAIL: TOM@TMM-ARCHITECT.COM

A NEW FIRE STATION NO. 1
located at
3170 Highway 77
for the
City of Southside, Alabama

NON-PRESSURE PIPING FLOOR PLAN

DRAWN	ALV
CHECKED	SMC
SCALE	AS NOTED
DATE	NOVEMBER 15, 2021
FILE	
JOB NO.	21-01
REVISIONS	

SHEET P1.0 OF XX SHEETS

Dewberry | EDMONDS
2 Riverchase Office Plaza
Suite 205
Hoover, AL 35244
(205) 988-2069
www.dewberry.com

Project Number :
50145027

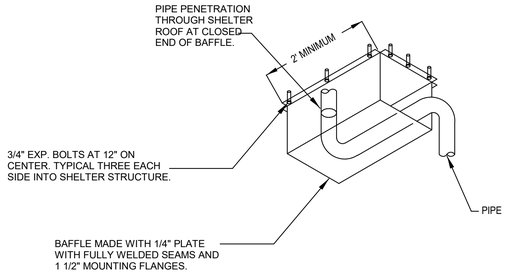

DETAIL OF PIPE PASSING THRU SHELTER ROOF/WALL

NO SCALE

SHELTER KEY NOTES	
1	SHELTER PENETRATION (SEE DETAIL)

AIR COMPRESSOR: INGERSOLL RAND 2475.6FP-230-1 TANK MOUNTED 7.5 HP COMPRESSOR ON 80 GALLON TANK STARTER. 208/1/60

AIR DRYER: INGERSOLL RAND D72IN, ELECTRIC 208/1/60 DRAIN, POWER ON LIGHT, AIR OUTLET PRESSURE, DIGITAL DISPLAY AND DIFF. PRESS. GUAGE.

CONTRACTOR TO ASSEMBLE AIR COMPRESSOR, DRYER TO BE PIPED IN THE FIELD. PROVIDE ALL INTERCONNECTING ELECTRICAL, PLUMBING AND MECHANICAL.

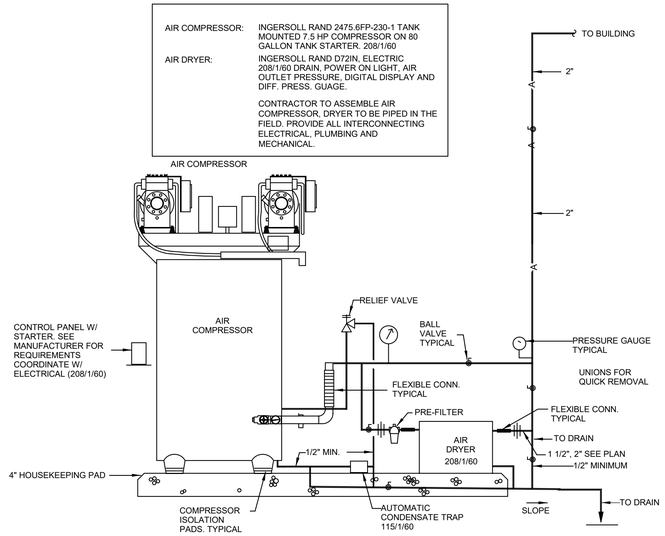

TYPICAL COMPRESSED AIR SYSTEM

NO SCALE

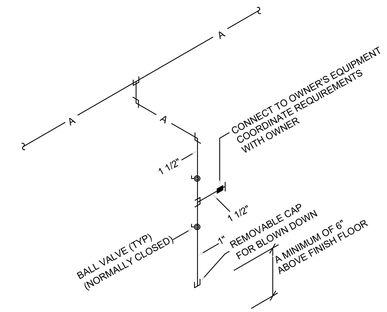

DETAIL OF AIR DROP W/ LOW POINT DRAIN DOWN

NO SCALE

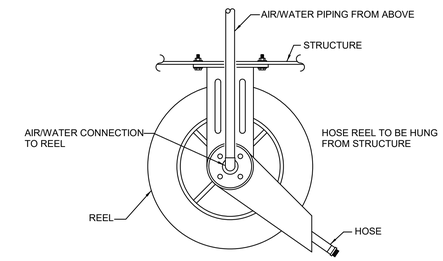

DETAIL OF HOSE REEL

NO SCALE

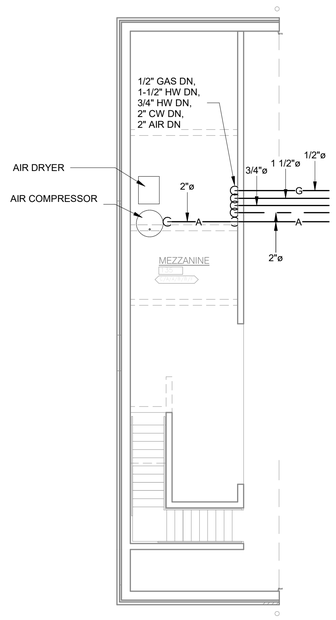

PRESSURE PIPING - MEZZANINE PLAN

SCALE: 1/8" = 1'-0"

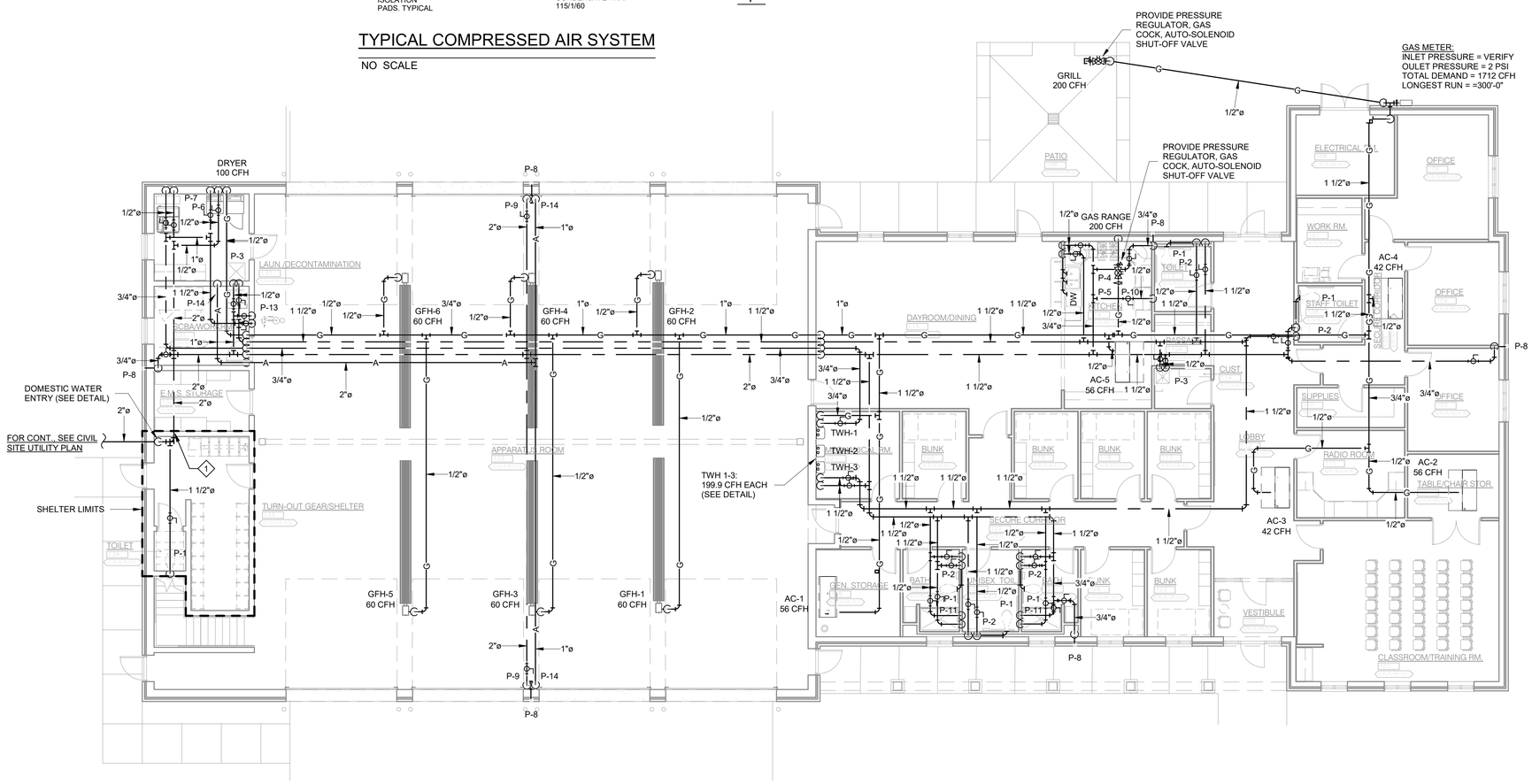

PRESSURE PIPING - FLOOR PLAN

SCALE: 1/8" = 1'-0"

PLAN NORTH

THOMAS M. McELRATH, ARCHITECT
ARCHITECTURE and SPACE PLANNING
717 MERIT SPRINGS ROAD
GADSDEN, ALABAMA 35901
PHONE: (256) 490-8244
EMAIL: TOM@TMM-ARCHITECT.COM

A NEW FIRE STATION NO. 1
located at
3170 Highway 77
for the
City of Southside, Alabama

PRESSURE PIPING FLOOR PLAN

DRAWN	ALV
CHECKED	SMC
SCALE	AS NOTED
DATE	DECEMBER 17, 2021
FILE	
JOB NO.	21-01
REVISIONS	

SHEET P2.0 OF XX SHEETS

DUCTWORK LEGEND

(CFM) S	SUPPLY DIFFUSER
(CFM) R	RETURN GRILLE
(CFM) E	EXHAUST GRILLE
(CFM) T	TRANSFER AIR GRILLE
(CFM) SR	SIDEWALL REGISTER
ø	ROUND DUCT SYMBOL
W X H	RECTANGULAR DUCT (WIDTH X HEIGHT)
	EXISTING DUCTWORK, PIPING, OR EQUIPMENT TO REMAIN.
	EXISTING DUCTWORK, PIPING, OR EQUIPMENT TO BE REMOVED.
	RECTANGULAR SUPPLY DUCT TURNING UP
	RECTANGULAR SUPPLY AIR DUCT TURNING DOWN
	RECTANGULAR RETURN AIR OR EXHAUST DUCT TURNING UP
	RECTANGULAR RETURN AIR OR EXHAUST DUCT TURNING DOWN
	FLAT OVAL TURNING UP.
	FLAT OVAL TURNING DOWN.
	ROUND DUCT TURNING DOWN
	ROUND DUCT TURNING UP
	MAXIMUM 5' FLEXIBLE DUCT ALL BRANCH DUCTS
	RECTANGULAR 90° ELBOW WITH TURNING VANES FOR SUPPLY.
	RISE OR DROP IN DUCT
	RECTANGULAR BRANCH OFF OF RECTANGULAR DUCT WITH MANUAL DAMPER
	CONICAL SPIN-IN WITH MANUAL DAMPER
MD	MANUAL DAMPER
FD	FIRE DAMPER (PROVIDE ACCESS DOOR)
AD	AUTOMATIC DAMPER
SFD	COMBINATION SMOKE/FIRE DAMPER (PROVIDE ACCESS DOOR)
T	TEMPERATURE SENSOR
H	HUMIDITY SENSOR
C	CO2 MONITOR
	CONNECT TO EXISTING, FIELD VERIFY EXACT SIZE AND LOCATION.

HVAC ABBREVIATIONS

A	AMPS
AFF	ABOVE FINISH FLOOR
AHU	AIR HANDLING UNIT
AMB.	AMBIENT
ARCH.	ARCHITCTURAL
BHP	BRAKE HORSEPOWER
BOD	BOTTOM OF DUCT
BTUH	BRITISH THERMAL UNIT PER HOUR
CFM	CUBIC FEET PER MINUTE
DB	DRY BULB
DN.	DOWN
°F	DEGREES FAHERNHEIT
ΔP	CHANGE IN PRESSURE
ΔT	CHANGE IN TEMPERATURE
DIA.	DIAMETER
EA	EXHAUST AIR
ENT.	ENTERING
EAT	ENTERING AIR TEMPERATURE
EMG	EXPANDED METAL GRILLE
EWT	EXTERNAL WATER TEMPERATURE
E.S.P.	EXTERNAL STATIC PRESSURE
EX.	EXISTING
EXT.	EXTERNAL
FPM	FEET PER MINUTE
FT.	FEET
F.V.	FACE VELOCITY
GAL.	GALLONS
GPM	GALLONS PER MINUTE
H	HEIGHT
HP	HORSEPOWER
IN.	INCHES
I.D.	INSIDE DIAMETER
KW	1000 WATTS
L	LENGTH
LBS.	POUNDS
LRA	LOCKED ROTOR AMPS
LVG.	LEAVING
LAT	LEAVING AIR TEMPERATURE
LWT	LEAVING WATER TEMPERATURE
MAX.	MAXIMUM
MAT	MIXED AIR TEMPERATURE
MBH	1000 BTUH
MCA	MINIMUM CIRCUIT AMPACITY
MIN.	MINIMUM
MOCP	MAXIMUM OVER CURRENT PROTECTION
NO	NORMALLY OPEN
NC	NORMALLY CLOSED
NPLV	NON-STAND PART LOAD VALUE
OSA	OUTSIDE AIR
O.D.	OUTSIDE DIAMETER
PSI	POUNDS PER SQUARE INCH
PSIA	PSI ATMOSPHERIC
PSIG	PSI GAUGE
RA	RETURN AIR
RAT	RETURN AIR TEMPERATURE
RH	RELATIVE HUMIDITY
RLA	RATED LOAD AMPS
RPM	REVOLUTIONS PER MINUTE
SA	SUPPLY AIR
SAT	SUPPLY AIR TEMPERATURE
T.S.P.	TOTAL STATIC PRESSURE
TD	TRANSFER DUCT
TOD	TOP OF DUCT
U.N.O.	UNLESS NOTED OTHERWISE
V	VOLUME
V/Ø/Hz	VOLTS/PHASE/HERTZ
W.G.	WATER GAGE
W	WIDTH
WB	WET BULB

HVAC CONTROLS LEGEND

T	TEMPERATURE SENSOR
H	HUMIDITY SENSOR
C	CO2 MONITOR
CP	120V HVAC CONTROLS POWER
TS	AVERAGING TEMPERATURE SENSOR
H	DUCT MOUNTED HUMIDITY SENSOR
AO	ANALOG OUTPUT
AI	ANALOG INPUT
DO	DIGITAL OUTPUT
DI	DIGITAL INPUT
SD	DUCT MOUNTED SMOKE DETECTOR. SMOKE DETECTOR FURNISHED AND WIRED BY ELECTRICAL CONTRACTOR, INSTALLED IN DUCT BY MECHANICAL CONTRACTOR.
HOA	HAND-OFF-AUTO MAGNETIC STARTER
SP	DUCT STATIC PRESSURE SENSOR
DP	DIFFERENTIAL PRESSURE SENSOR
	INTERLOCK WITH FIRE ALARM SYSTEM
M	FAN/PUMP MOTOR
VFD	VARIABLE FREQUENCY DRIVE
CT	CURRENT TRANSDUCER
FS	FLOW SWITCH
	DIRECTION OF FLOW
TS	PIPE MOUNTED TEMPERATURE SENSOR
	2-WAY AUTOMATIC VALVE
	3-WAY AUTOMATIC VALVE
H-O-A	HAND-OFF-AUTO SWITCH
AFM	AIR FLOW MONITOR. (PROVIDE ACCESS DOOR AT EACH AIR FLOW MONITOR.)

PIPING LEGEND

CHS	CHILLED WATER SUPPLY PIPING
CHR	CHILLED WATER RETURN PIPING
HWS	HOT WATER SUPPLY PIPING
HWR	HOT WATER RETURN PIPING
D	DRAIN PIPING
AAV OR	AAV-AUTO. AIR VENT (MARKED OR SHOWN)
	GATE VALVE
	GLOBE VALVE
	BALL VALVE
	TWO-WAY AUTO CONTROL VALVE.
	THREE-WAY AUTO CONTROL VALVE.
	BUTTERFLY VALVE.
	BUTTERFLY VALVE.
	PRESSURE REDUCING VALVE.
	PIPE TURNING UP.
	PIPE TURNING DOWN.
	BRANCH OFF TOP OF MAIN.
	BRANCH OFF BOTTOM OF MAIN.
	BRANCH OFF SIDE OF MAIN.
	CALIBRATED BALACING VALVE
	ECCENTRIC REDUCER
	STRAINER (Y)
	FLEXIBLE CONNECTION IN PIPING
	UNION
	PETES PLUG
	SLOPE DOWN IN DIRECTION OF ARROW.
	CHECK VALVE
	ASME PRESSURE RELIEF VALVE.

AIR DEVICE LEGEND

MARK	EXAMPLE	DESCRIPTION	SIZE	BASIS OF DESIGN
"S"	200S / CFM	PLAQUE FACE CEILING DIFFUSER WITH ROUND NECK. ALL CEILING DIFFUSERS TO HAVE A 24X24 CEILING PANEL (EXCEPT WHERE SHOWN AS 12X12). ALL CEILING DIFFUSERS TO HAVE ROUND NECKS.	CFM SHOWN ON PLANS. NECK & RUN-OUT SIZED PER THE FOLLOWING: CFM / NECK SIZE / RUN-OUT SIZE 0 - 100 / 6" / 6" 101 - 200 / 8" / 8" 201 - 300 / 10" / 10" 301 - 500 / 12" / 12" 501 - 750 / 15" / 15" 751 - 1000 / 18" / 18"	TITUS OMNI
"LD"	200LD / CFM	LOUVER FACE CEILING DIFFUSER WITH SQUARE NECK. ALL CEILING DIFFUSERS TO HAVE A 24X24 CEILING PANEL (EXCEPT WHERE SHOWN AS 12X12). ALL CEILING DIFFUSERS TO HAVE SQUARE NECKS.	CFM SHOWN ON PLANS. NECK & RUN-OUT SIZED PER THE FOLLOWING: CFM / NECK SIZE / RUN-OUT SIZE 0 - 100 / 6"x6" / 6" 101 - 200 / 9"x9" / 8" 201 - 300 / 12"x12" / 10" 301 - 500 / 15"x15" / 12" 501 - 750 / 18"x18" / 15" 751 - 1000 / 21"x21" / 18"	TITUS TDCA-AA
"R", "E", "T"	200R / CFM; R24 / SQUARE NECK SIZE	CEILING MOUNTED RETURN (R), EXHAUST (E), OR TRANSFER (T) EGGCRATE GRILLE. ALL GRILLES IN A LAY-IN CEILING TO HAVE A 24X24 CEILING PANEL.	CFM SHOWN ON PLANS. NECK SIZED PER THE FOLLOWING: CFM / NECK SIZE 0 - 100 / 6x6 101 - 200 / 8x8 201 - 350 / 10x10 351 - 500 / 12x12 501 - 750 / 14x14 751 - 950 / 16x16 951 - 1200 / 18x18 1201 - 1500 / 20x20 1501 - 2000 / 24x24	TITUS 50F
SR	SR12X6 / 200 / CFM / W x H	SIDEWALL SUPPLY REGISTER.	SIZE (WxH) IN INCHES & CFM SHOWN.	TITUS 272FL
WRG / WTG	WRG12X6 / 200 / CFM / W x H	WALL RETURN GRILLE / WALL TRANSFER GRILLE.	SIZE (WxH) IN INCHES & CFM SHOWN.	TITUS 350FL

NOTES:
1. SEE SPECIFICATIONS FOR FINISH AND CONSTRUCTION MATERIAL FOR EACH AIR DEVICE.
2. COORDINATE WITH ARCHITECT'S CEILING PLAN FOR LAY-IN OR SURFACE MOUNTING OF CEILING MOUNTED AIR DEVICES.
3. COORDINATE LOCATIONS OF CEILING MOUNTED AIR DEVICES WITH LIGHT FIXTURES, SPRINKLER HEADS, AND OTHER CEILING MOUNTED DEVICES. DO NOT SCALE MECHANICAL DRAWINGS FOR LOCATIONS.

AIR PURIFICATION SCHEDULE

GPS MODEL	QUANTITY*	VOLTAGE	WATTS	MOUNTING LOCATION	MIN ION DENSITY(IONS/CC)	NOTES
GPS-FC	1 PER MINI INDOOR UNIT OR INDOOR SPLIT UNIT	208	5	TWHP	20 MILLION	1 TO 6

NOTES:
1. BASIS OF DESIGN: PHENOMENAL AIRE: APPROVED EQUALS BY GLOBAL PLASMA SOLUTIONS, ACTIVE AIR, AIRGENICS AND BIOXGEN SUBJECT TO SPECIFICATION COMPLIANCE.
2. MOUNT BI-POLAR ION GENERATOR WHERE INDICATED ON SCHEDULE.
3. IF CONTRACTOR SUBSTITUTES BASIS OF DESIGN WITH ANOTHER MANUFACTURER, CONTRACTOR SHALL COORDINATE ALL ELECTRICAL AND MECHANICAL CHANGES.
4. BI-POLAR IONIZATION SYSTEMS REQUIRING PERISHABLE GLASS TUBES ARE NOT ACCEPTABLE.
5. ALL MANUFACTURER'S MUST PASS UL-867-2007 OZONE CHAMBER TESTING BY EITHER US OR ETL.
6. PROVIDE GPS-FC-2 FOR CEILING CASSETTES AND HORIZONTAL ABOVE CEILING UNITS AND GPS-FC-48 FOR VERTICAL UNITS OR EQUAL.

✳ PROVIDE FOR ALL INDOOR SPLITS AND MINI SPLITS.

FANS

NO.	TYPE	CFM	INS. WGSP	MAX. SONES	MOTOR HP	VOLTAGE	ACCESSORIES	INTERLOCK WITH	BASIS OF DESIGN COOK MODEL
EF-1	CE	50	0.375"	3	0.7 A	115/1/60	1 2 3 4 5	LIGHTS	GEMINI
EF-2	CE	50	0.375"	3	0.7 A	115/1/60	1 2 3 4 5	LIGHTS	GEMINI
EF-3	CE	50	0.375"	3	0.7 A	115/1/60	1 2 3 4 5	LIGHTS	GEMINI
EF-4	CE	100	0.375"	3	0.7 A	115/1/60	1 2 3 4 5	LIGHTS	GEMINI
EF-5	CE	50	0.375"	3	0.7 A	115/1/60	1 2 3 4 5	LIGHTS	GEMINI
EF-6	CE	100	0.375"	3	0.7 A	115/1/60	1 2 3 4 5	LIGHTS	GEMINI
EF-7	CE	70	0.375"	3	0.7 A	115/1/60	1 2 3 4 5 9	LIGHTS	GEMINI
EF-VENT	WM	15,000	0.75"	29	5.0 HP	208/3/60	1 2 6 7 8 10	T'STAT AND WALL SWITCH	60XMWH
EF-A1,A2,A3	AV	1,200	0.375"	---	1/4 HP	115/1/60	1 2 10	T'STAT	BROAN 355
VF-A1 QTY. 3	ILD	250	0.5"	6	1/25 HP	115/1/60	1 2 4 6 10	T'STAT AND WALL SWITCH	SQND
VF-A2	ILD	350	0.5"	8	1/8 HP	115/1/60	1 2 4 6 10	T'STAT AND WALL SWITCH	SQND

TYPES:
- CE - CEILING EXHAUST FAN
- WM - WALL MOUNTED PROPELLER
- AV - ATTIC VENTILATION FAN
- ILD - IN-LINE DIRECT DRIVE

ACCESSORIES:
1. BACKDRAFT DAMPER.
2. DISCONNECT SWITCH.
3. ALUMINUM CEILING GRILLE.
4. 5A-120V FAN SPEED CONTROLLER.
5. INTERLOCK WITH LIGHT SWITCH.
6. INTERLOCK WITH THERMOSTAT AND WALL SWITCH.
7. WALL LOUVER AND AUTO DAMPER.
8. MOTOR SIDE GUARD.
9. TO BE PLACED ON EMERGENCY POWER.
10. EXPANDED METAL INTAKE GUARD.

DIRECT VENT GAS FIRED FURNACE SCHEDULE

SYMBOL	CFM	O.A. CFM	E.S.P. (IN. W.C.)	SUP. FAN H.P.	COOLING CAP. (MBH)		GAS HEAT CAP. (MBH)		ELECTRICAL			EQUAL TO TRANE
					TOTAL	SENSIBLE	INPUT	OUTPUT	MCA	M.O.P.	VOLTS/PH./HZ.	
AC-1	1000	200	0.5	1/2	30	22.5	40	39	9	15	120/1/60	4TTR4
AC-2	1000	175	0.5	1/2	30	22.5	40	39	9	15	120/1/60	4TTR4
AC-3	800	100	0.6	1/4	23	16.2	26	20	7	15	120/1/60	4TTR4
AC-4	800	75	0.6	1/4	23	16.2	26	20	7	15	120/1/60	4TTR4
AC-5	1000	180	0.5	1/2	30	22.5	40	39	9	15	120/1/60	4TTR4

REMARKS:
1. SINGLE POINT POWER CONNECTION.
2. ESP IS EXTERNAL TO UNIT AND COOLING COIL.
3. PROVIDE 2" FILTER RACK, HINGED & LATCHED EQUAL TO EZ-FILTER.
4. PROVIDE ION GENERATORS FOR ALL UNITS. INSTALL PER MANUFACTURER'S INSTRUCTIONS.

CONDENSING UNIT SCHEDULE

SYMBOL	TOTAL COOLING (MBH)	SUCTION TEMP.(°F)	AMBIENT TEMP.(°F)	ELECTRICAL							NO. COND. FANS	H.P. EA.	FLA EA.	MIN. EER	WEIGHT LBS	EQUAL TO TRANE
				VOLTAGE	MCA	MFS	NO. OF COMP.	RLA EA.	LRA EA.	KW						
CU-3, CU-4	23	45	95	208/1/60	14	20	1	10.1	52.0	-	1	-	0.9	12.5	150	S9X1B
CU-1, CU-2, CU-5	30	45	95	208/1/60	17	25	1	12.8	68	-	1	-	0.64	12.5	180	S8X1B

* MANUFACTURER TO SIZE REF PIPE FOR LENGTHS INDICATED ON DRAWINGS, PROVIDE REF SPECIALTIES AS NECESSARY. PROVIDE LOCKING REFRIGERANT CAPS ON ALL LINES.

Dewberry | EDMONDS
2 Riverchase Office Plaza
Suite 205
Hoover, AL 35244
(205) 988-2069
www.dewberry.com
Project Number : 50145027

ALABAMA LICENSED No. 24747 PROFESSIONAL ENGINEER 12-17-2021 WADE STENARTA

THOMAS M. McELRATH, ARCHITECT
ARCHITECTURE and SPACE PLANNING
717 MERIT SPRINGS ROAD
GADSDEN, ALABAMA 35901
PHONE: (256) 490-8244
EMAIL: TOM@TMM-ARCHITECT.COM

A NEW FIRE STATION NO. 1
located at
3170 Highway 77
for the
City of Southside, Alabama

MECHANICAL LEGEND AND SCHEDULES

DRAWN	RBG
CHECKED	JWS
SCALE	AS NOTED
DATE	DECEMBER 17, 2021
FILE	
JOB NO.	21-01
REVISIONS	

SHEET M0.1 OF XX SHEETS

OUTDOOR HEAT PUMP (DUCTLESS SPLIT SYSTEM) SCHEDULE

TYPE:
1. OUTDOOR HEAT PUMP

NOTES:
1. AIRFLOW RATED AT HIGH FAN SPEED.
2. POWER FOR INDOOR UNIT IS FED FROM OUTDOOR UNIT.
3. COOLING CAPACITY RATED AT 95°F.
4. HEATING CAPACITY RATED AT 47°F.
5. REFRIGERANT CIRCUIT ACCESS PORTS LOCATED OUTDOORS SHALL BE FITTED WITH LOCKING TYPE TAMPER RESISTANT CAPS.

MARK	TYPE	COOLING CAPACITY	HEATING CAPACITY	ELECTRICAL					EFFICIENCY		BASIS OF DESIGN
				V	PH	HZ	MCA	MOCP	SEER	HSPF	
OHP-A	1	24 MBH	26 MBH	208 V	1	60	18 A	30 A	17.0	10.8	MITSUBISHI

INDOOR HEAT PUMP (DUCTLESS SPLIT SYSTEM) SCHEDULE

TYPE:
1. INDOOR, WALL MOUNT

NOTES:
1. AIRFLOW RATED AT HIGH FAN SPEED.
2. POWER FOR INDOOR UNIT IS FED FROM OUTDOOR UNIT.
3. COOLING CAPACITY RATED AT 95°F.
4. HEATING CAPACITY RATED AT 47°F.

ACCESSORIES:
1. 3-POLE DISCONNECT SWITCH.
2. HARD WIRED UNIT CONTROLLER.
3. FULL PORT BALL VALVES & SCHRADER VALVES WITH FLARED CONNECTIONS.
4. CONDENSATE PUMP (120/1/60) - 1 GPH @ 33 FT. HD.

MARK	TYPE	AIRFLOW	COOLING CAPACITY	HEATING CAPACITY	DIMENSIONS (WxLxH)	ELECTRICAL				ACCESSORIES	BASIS OF DESIGN
						V	PH	HZ	MCA		
IHP-A	1	700	24 MBH	26 MBH	46" x 12" x 14"	208 V	1	60	1 A	1,2,3,4	MITSUBISHI

WALL HEATER SCHEDULE

HEATER TYPE:
1. ELECTRIC WALL HEATER.
2. BASIS OF DESIGN: MARKEL 3450

ACCESSORIES:
1. SURFACE MOUNTING.
2. UNIT MOUNTED THERMOSTAT.
3. CONCEALED ON/OFF SWITCH.
4. HIGH LIMIT CONTROLS.
5. BUILT-IN CIRCUIT BREAKER.

MARK	QUANTITY	SIZE	ELECTRICAL			ACCESSORIES
			V	PH	HZ	
EWH-1	4	2 KW	208 V	1	60	1,2,3,4,5

DEHUMIDIFIER SCHEDULE

UNIT TYPE:
1. HORIZONTAL DEHUMIDIFIER ABOVE CEILING WITH DUCT COLLARS

NOTE:
1. PROVIDE ACCESS PANEL FOR SERVICING UNIT.

ACCESSORIES:
1. WALL MOUNTED HUMIDITY SENSOR
2. SPRING VIBRATION ISOLATORS
3. MERV 13 FILTER
4. AUXILARY DRAIN PAN WITH FLOAT SWITCH
5. CONDENSATE PUMP

MARK	WATER REMOVAL	AIR FLOW (CFM)	ELECTRICAL			MCA	MOCP	Unit Weight (LBS)	ACCESSORIES
			V	PH	HZ				
DH-1	90 PINTS/DAY	**300**	120	1	60	5.9 A	15 A	90	1,2,3,4,5

GAS FIRED RADIANT TUBE HEATER SCHEDULE

UNIT TYPE:
1. GAS FIRED RADIANT TUBE HEATER.

NOTES:
1. INSTALL PER MANUFACTURER'S RECOMMENDATION.
2. MOUNT 14' A.F.F. USING 3/8" THREDED ROD.
3. MAINTAIN 3' CLEARENCE FROM LIGHTS, DUCT, AND ANY COMBUSTIBLES.
4. PROVIDE OPTIONAL OUTSIDE AIR INLET COLLAR & 2 STAGE T' STAT.

CONTROL NOTES:
GAS FIRED UNIT HEATER TO BE CONTROLLED BY WALL MOUNTED THERMOSTAT, SET TO 65°F.

MARK	TYPE	INPUT (MBH)	OUTPUT (MBH)	ELECTRICAL			BASIS OF DESIGN	
				V	PH	HZ	MANUFACTURER	MODEL NUMBER
GFH-1	1	60	48	120 V	1	60	Superior Radiant Products LTD	VPT
GFH-2	1	60	48	120 V	1	60	Superior Radiant Products LTD	VPT
GFH-3	1	60	48	120 V	1	60	Superior Radiant Products LTD	VPT
GFH-4	1	60	48	120 V	1	60	Superior Radiant Products LTD	VPT
GFH-5	1	60	48	120 V	1	60	Superior Radiant Products LTD	VPT
GFH-6	1	60	48	120 V	1	60	Superior Radiant Products LTD	VPT

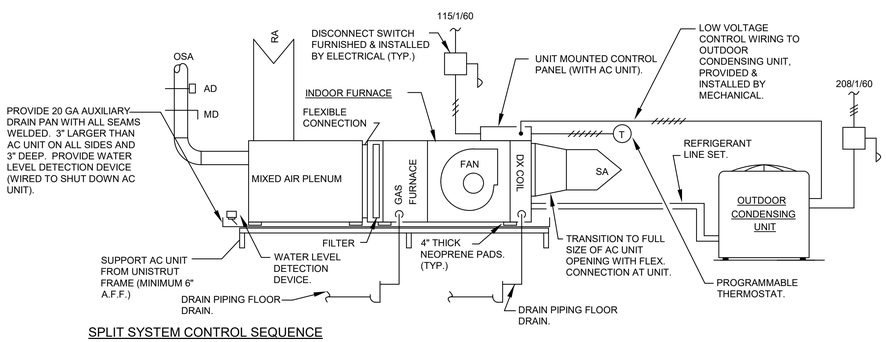

SPLIT SYSTEM CONTROL SEQUENCE

EACH AC UNIT SHALL BE STARTED AND STOPPED BY WALL MOUNTED PROGRAMMABLE THERMOSTAT, SUBJECT TO FACTORY SAFETIES AND THE DUCT MOUNTED SMOKE DETECTOR (IF APPLICABLE).

WHEN AC UNIT AND CORRESPONDING CONDENSING UNIT IS ENERGIZED, THE RESPECTIVE OSA DAMPER SHALL OPEN. THE AC UNIT SUPPLY FAN SHALL START. OSA DAMPER SHALL CLOSE WHEN UNIT DE-ENERGIZES.

DURING OCCUPIED HOURS, THE THERMOSTAT SHALL ENERGIZE CONDENSING UNIT CONTROLS UPON A RISE IN ROOM TEMPERATURE PROVIDE COOLING BY LOADING AND UNLOADING COMPRESSORS IN STAGES AS NEEDED TO SATISFY SPACE TEMPERATURE SETPOINT (74°F - ADJUSTABLE) DURING SUMMER MONTHS. UPON A DROP IN SPACE TEMPERATURE DURING WINTER MONTHS, THE CONDENSING UNIT SHALL BE OFF AND THE GAS FURNACE SHALL STAGE ON TO MAINTAIN SPACE TEMPERATURE SETPOINT (70°F - ADJUSTABLE). OCCUPIED HOURS TO BE DETERMINED BY THE OWNER.

PROVIDE NIGHTTIME SETBACK TEMPERATURE THRU PROGRAMMABLE THERMOSTAT TO MAINTAIN 78°F (SUMMER), 66°F (WINTER), AFTER HOURS. UPON ACTIVATION OF NIGHT LOW LIMIT THERMOSTAT UNIT SHALL OPERATE IN OCCUPIED MODE UNTIL SATISFIED.

DEHUMIDIFIER CONTROL SEQUENCE

UNIT FAN SHALL BE STARTED/STOPPED BY WALL MOUNTED HUMIDISTAT. SUBJECT TO FLOAT SWITCH. OSA DAMPER SHALL CLOSE WHEN UNIT DE-ENERGIZES. UNIT SHALL ENERGIZE AS NEEDED TO MAINTAIN HUMIDITY SET POINT APPROX. 60% (ADJUSTABLE).

SPLIT SYSTEM CONTROLS

NO SCALE

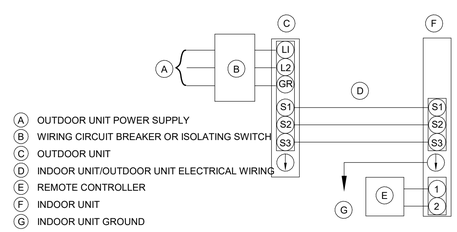

A OUTDOOR UNIT POWER SUPPLY
B WIRING CIRCUIT BREAKER OR ISOLATING SWITCH
C OUTDOOR UNIT
D INDOOR UNIT/OUTDOOR UNIT ELECTRICAL WIRING
E REMOTE CONTROLLER
F INDOOR UNIT
G INDOOR UNIT GROUND

WIRING DETAIL FOR DUCTLESS MINI-SPLIT

NO SCALE

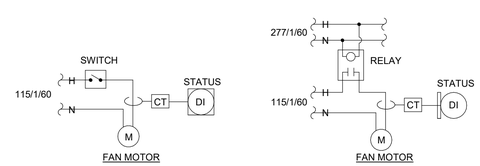

EXHAUST FAN CONTROLLED BY SWITCH. EXHAUST FAN CONTROLLED BY LIGHTING CIRCUIT.

THE BAS SHALL MONITOR FAN STATUS VIA A CURRENT TRANSDUCER.

EXHAUST FAN CONTROLS

NO SCALE

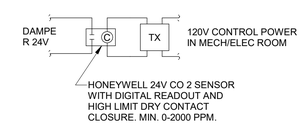

CONTROL SEQUENCE:

WHEN THE SPACE CO2 LEVEL RISES ABOVE 1000 PPM AS MEASURED BY THE WALL MOUNTED CO2 SENSOR, THE OSA DAMPER SHALL OPEN TO PROVIDE THE SCHEDULED OUTSIDE AIR TO THE SPACE. WHEN THE SPACE CO2 LEVEL FALLS BELOW 900 PPM, THE OSA DAMPER SHALL CLOSE.

OSA AD CONTROLS

NO SCALE

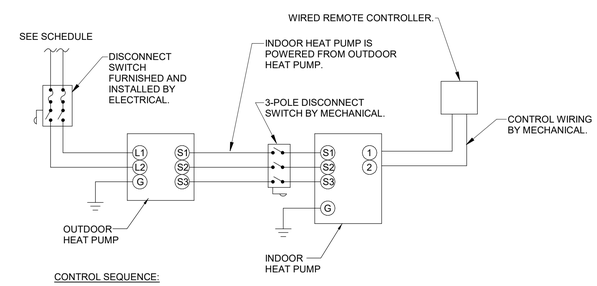

CONTROL SEQUENCE:

THE AC UNIT SHALL BE CONTROLLED BY A WIRED WALL MOUNTED REMOTE CONTROLLER. THE CONTROLLER SHALL CYCLE ON COMPRESSOR(S) TO MAINTAIN COOLING SETPOINT (74°F - ADJUSTABLE) AND HEATING SETPOINT (70°F - ADJUSTABLE).

DUCTLESS SPLIT SYSTEM CONTROLS

NO SCALE

Dewberry | EDMONDS
2 Riverchase Office Plaza
Suite 205
Hoover, AL 35244
(205) 988-2069
www.dewberry.com

Project Number : 50145027

ALABAMA LICENSED No. 24747 PROFESSIONAL 11-15-2021 ENGINEER WADE STEWART

THOMAS M. McELRATH, ARCHITECT
ARCHITECTURE and SPACE PLANNING
717 MERIT SPRINGS ROAD
GADSDEN, ALABAMA 35901
PHONE: (256) 490-8244
EMAIL: TOM@TMM-ARCHITECT.COM

A NEW FIRE STATION NO. 1
located at
3170 Highway 77
for the
City of Southside, Alabama

MECHANICAL SCHEDULES AND CONTROLS

DRAWN	RBG
CHECKED	JWS
SCALE	AS NOTED
DATE	NOVEMBER 15, 2021
FILE	
JOB NO.	21-01
REVISIONS	

SHEET M0.2 OF XX SHEETS

Dewberry | EDMONDS
2 Riverchase Office Plaza
Suite 205
Hoover, AL 35244
(205) 988-2069
www.dewberry.com
Project Number :
50145027

ALABAMA LICENSED No. 24747 PROFESSIONAL 11-15-2021 ENGINEER WADE STEWART

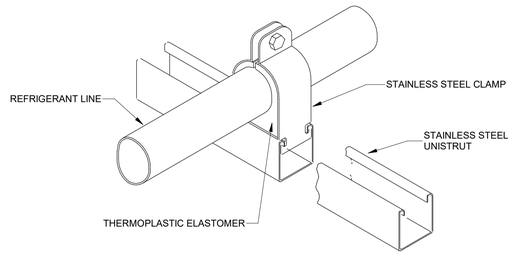

REFRIGERANT LINE SUPPORT DETAIL

NO SCALE

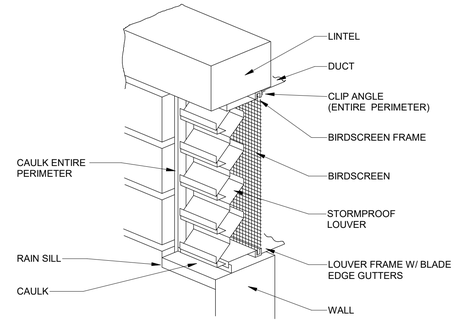

TYPICAL HVAC WALL LOUVER

NO SCALE

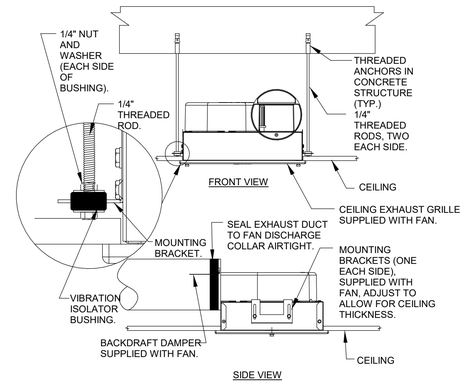

CEILING EXHAUST FAN DETAIL

NO SCALE

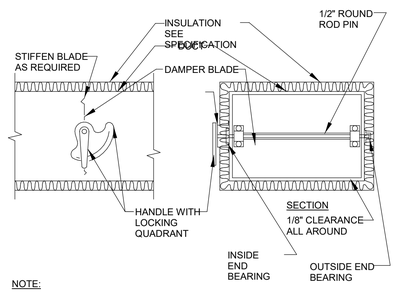

NOTE:

1. DELETE INSULATION STAND-OFF ON DUCTWORK WITHOUT EXTERIOR INSULATION.
2. DETAIL SHOWS SINGLE BLADE DAMPER. DAMPER INSTALLATION SHALL BE SIMILAR FOR MULTI-BLADE DAMPERS & ROUND DAMPERS.
3. MANUAL DAMPERS SHALL BE EQUAL TO RUSKIN MD35 (FOR RECTANGULAR DUCTS) AND SHALL BE EQUAL TO RUSKIN MDRS25 (FOR ROUND DUCTS).

MANUAL DAMPER DETAIL

NO SCALE

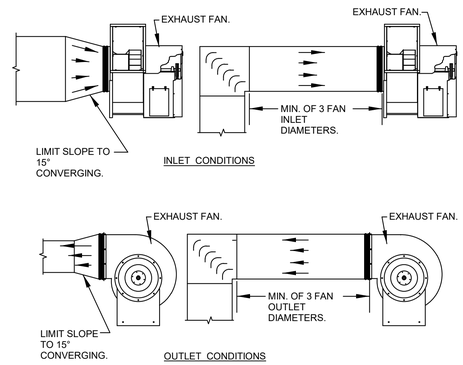

NOTES:
1. INLET AND OUTLET CONDITIONS ARE FOR DUCTWORK CONNECTED TO ANY FAN AT AIR HANDLERS, ENERGY RECOVERY VENTILATORS, PACKAGED AC EQUIPMENT, EXHAUST FANS, SUPPLY FANS, ETC.

DUCTWORK CONNECTION AT FAN DETAIL

NO SCALE

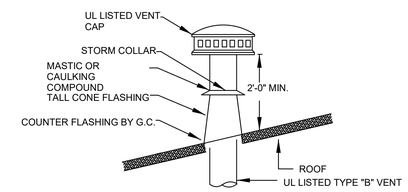

GAS VENT THRU ROOF DETAIL

NO SCALE

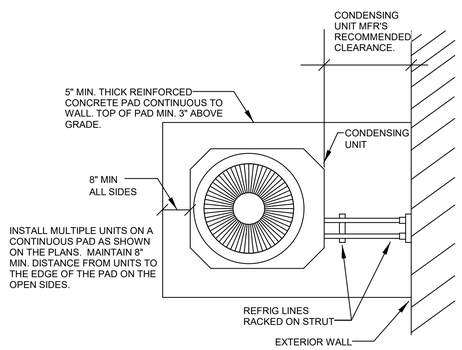

TYP. CONDENSING UNIT INSTALLATION

NO SCALE

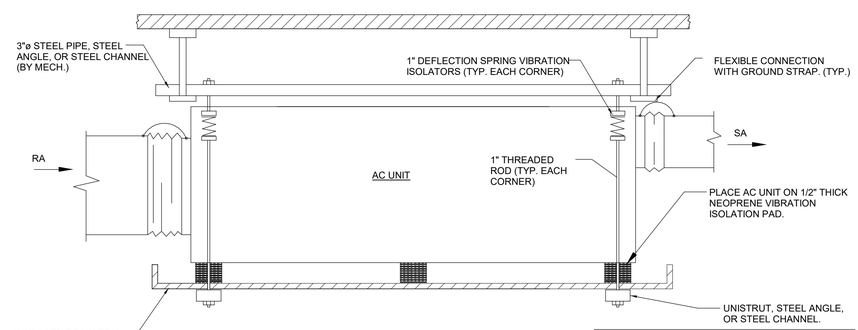

AUXILLARY DRAIN PAN
1. AUX. DRAIN PAN SHALL BE 3" LARGER (ALL 4 SIDES) THAN AC UNIT AND SHALL BE 3" DEEP. TOP EDGE SHALL BE HEMMED. FABRICATE FROM 18 GA. GALVANIZED STEEL, SEAL WATERTIGHT.

2. PROVIDE FLOAT SWITCH IN AUX. DRAIN PAN, WIRED TO SHUT DOWN AC UNIT.

NOTES

1. ROUTE CONDENSATE DRAIN LINE TO NEAREST HUB DRAIN BOX. SEE PIPING PLAN & SEE PLUMBING.

2. PROVIDE MINIMUM OF 36" CLEARANCE ON CONTROL PANEL SIDE OF UNIT TO ACCESS FILTERS, MOTOR, COILS, ETC.

AC UNIT SUSPENDED FROM STRUCTURE

NO SCALE

THOMAS M. McELRATH, ARCHITECT
ARCHITECTURE and SPACE PLANNING
717 MERIT SPRINGS ROAD
GADSDEN, ALABAMA 35901
PHONE: (256) 490-8244
EMAIL: TOM@TMM-ARCHITECT.COM

A NEW FIRE STATION NO. 1
located at
3170 Highway 77
for the
City of Southside, Alabama

MECHANICAL DETAILS

DRAWN	RBG
CHECKED	JWS
SCALE	AS NOTED
DATE	NOVEMBER 15, 2021
FILE	
JOB NO.	21-01
REVISIONS	

SHEET M0.3 OF XX SHEETS

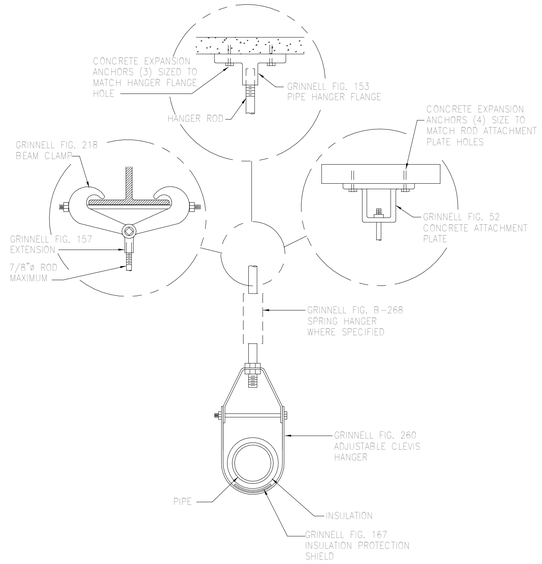

CLEVIS HANGER DETAIL

NO SCALE

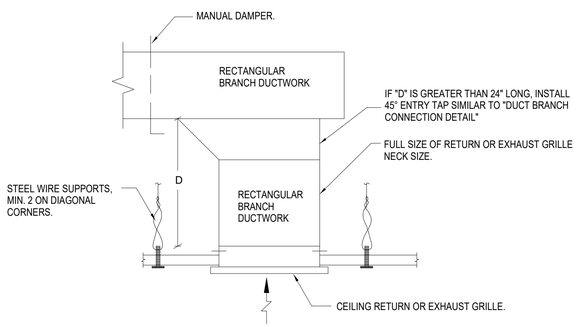

CEILING RETURN/EXHAUST BRANCH CONNECTION DETAIL

NO SCALE

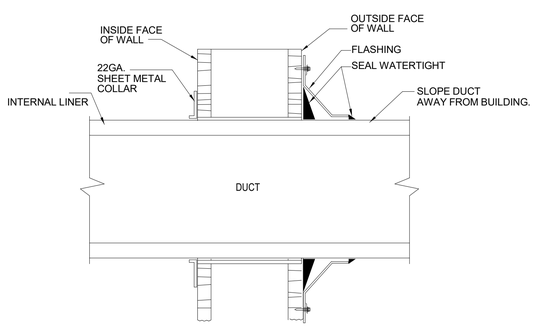

DUCTWORK THRU OUTSIDE WALL DETAIL

NO SCALE

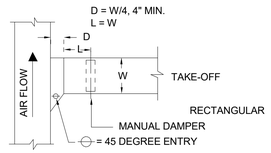

DUCT BRANCH CONNECTION DETAIL

NOT TO SCALE

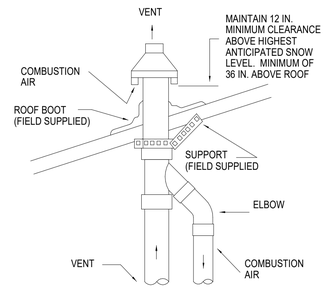

COMBINATION FLUE/INTAKE CAP

NOT TO SCALE

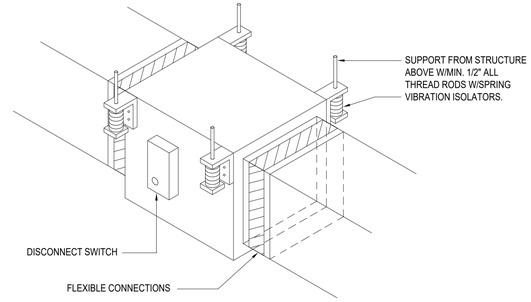

IN-LINE FAN INSTALLATION DETAIL

NOT TO SCALE

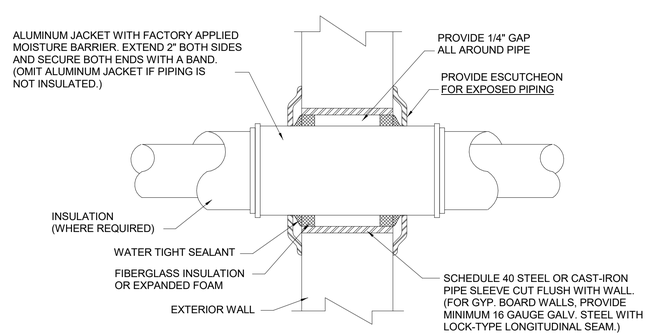

PIPE WALL PENETRATION DETAIL

NOT TO SCALE

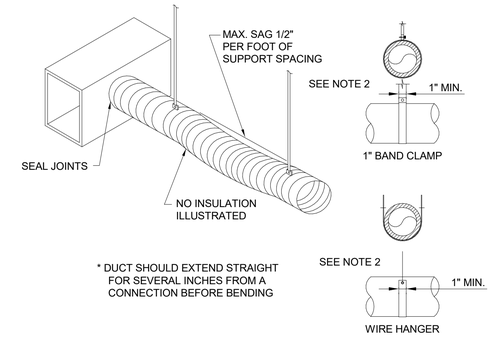

NOTES:

1. SUPPORT SYSTEM MUST NOT DAMAGE DUCT OR CAUSE OUT OF ROUND SHAPE.
2. DUCTS ARE FLEXIBLE WITH EXTERNAL INSULATION AND VAPOR BARRIER JACKETING.
3. MIN. CENTER LINE BEND LINE RADIUS IS ONE DIA. (OR INSIDE RADIUS OF D/2).
4. FLEXIBLE DUCT LENGTH SHALL NOT EXCEED 5 LINEAR FEET.

FLEXIBLE DUCT SUPPORT DETAIL

NOT TO SCALE

VEHICLE EXHAUST FAN

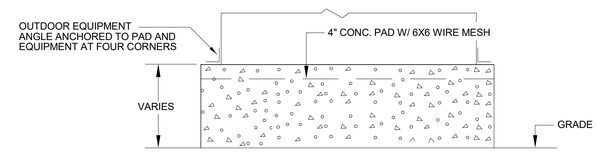

OUTDOOR CONCRETE PAD DETAIL

NO SCALE

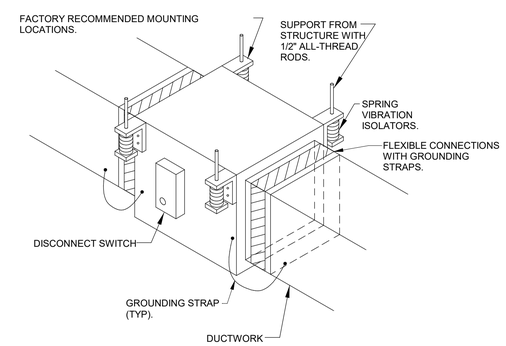

IN-LINE FAN INSTALLATION DETAIL

NO SCALE

Dewberry | EDMONDS
2 Riverchase Office Plaza
Suite 205
Hoover, AL 35244
(205) 988-2069
www.dewberry.com
Project Number : 50145027

ALABAMA LICENSED No. 24747 PROFESSIONAL 11-15-2021 ENGINEER WADE STEWART

THOMAS M. McELRATH, ARCHITECT
ARCHITECTURE and SPACE PLANNING
717 MERIT SPRINGS ROAD
GADSDEN, ALABAMA 35901
PHONE: (256) 490-8244
EMAIL: TOM@TMM-ARCHITECT.COM

A NEW FIRE STATION NO. 1
located at
3170 Highway 77
for the
City of Southside, Alabama

MECHANICAL DETAILS

DRAWN	RBG
CHECKED	JWS
SCALE	AS NOTED
DATE	NOVEMBER 15, 2021
FILE	
JOB NO.	21-01
REVISIONS	

SHEET M0.4 OF XX SHEETS

Dewberry | EDMONDS
2 Riverchase Office Plaza
Suite 205
Hoover, AL 35244
(205) 988-2069
www.dewberry.com
Project Number :
50145027

ALABAMA LICENSED No. 24747 PROFESSIONAL ENGINEER WADE STEWART 11-15-2021

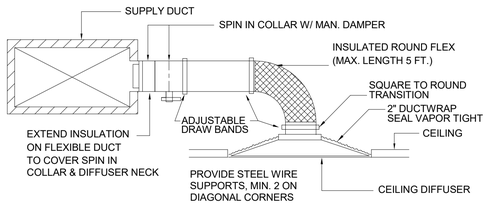

NOTE: WHEREVER THE SUPPLY DUCT HEIGHT IS INSUFFICIENT TO CONNECT THE SPIN-IN, THE SPIN-IN MAY BE CONNECTED TO THE TOP OR BOTTOM OF THE DUCT. IF THE BRANCH DUCT MUST BE CONNECTED TO THE SIDE OF THE MAIN DUCT, USE A RECTANGULAR BRANCH DUCT CONNECTION (SEE DETAIL) OF EQUAL AIR VELOCITY AND TRANSITION TO ROUND DUCT. REFER TO SPECIFICATION FOR MAXIMUM TURNS IN FLEX DUCT.

CEILING DIFFUSER INSTALLATION DETAIL
NOT TO SCALE

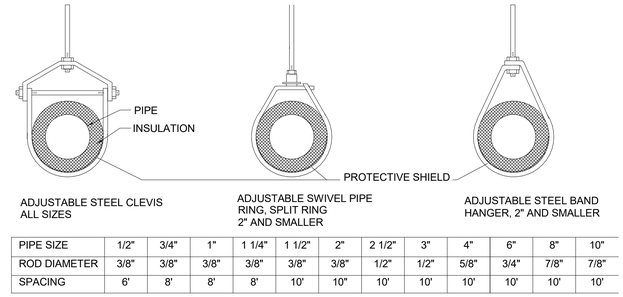

PIPE SIZE	1/2"	3/4"	1"	1 1/4"	1 1/2"	2"	2 1/2"	3"	4"	6"	8"	10"
ROD DIAMETER	3/8"	3/8"	3/8"	3/8"	3/8"	3/8"	1/2"	1/2"	5/8"	3/4"	7/8"	7/8"
SPACING	6'	8'	8'	8'	10'	10"	10'	10'	10'	10'	10'	10'

NOTE: LOCATE ADDITIONAL HANGERS AT VALVES AND AT CHANGES IN DIRECTION.

✳ SPACING FOR PIPE HANGERS FOR PIPE SIZES LARGER THAN 3" AND HUNG FROM BAR JOISTS SHALL BE DETERMINED BY STRUCTURAL ENGINEER. SEE STRUCTURAL DRAWINGS AND SPECIFICATIONS.

PIPE HANGER DETAIL
NO SCALE

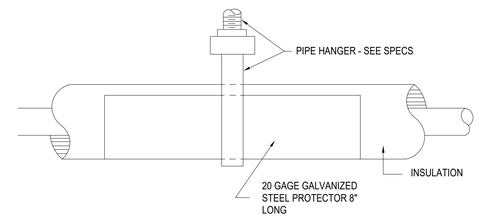

INSULATED LINES

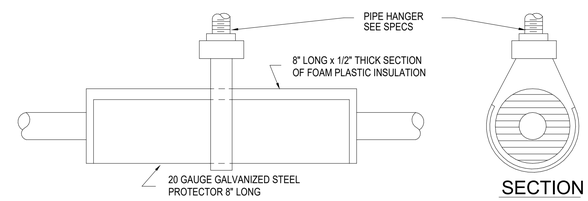

UNINSULATED LINES

REFRIGERANT LINE HANGER DETAIL
NOT TO SCALE

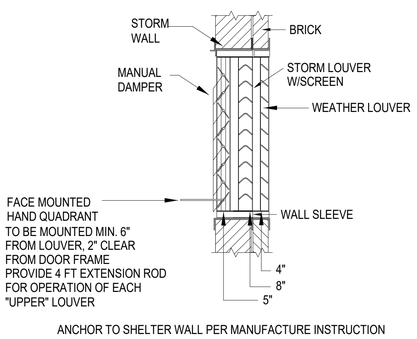

STORM SHELTER LOUVER DETAIL
NO SCALE

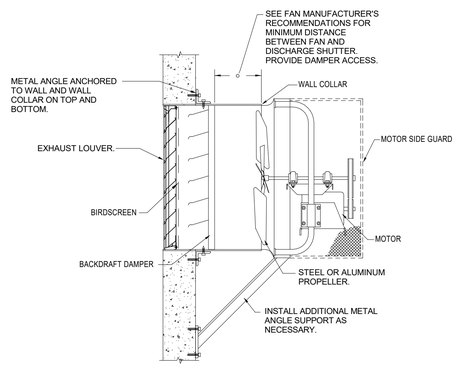

WALL PROP FAN DETAIL
NO SCALE

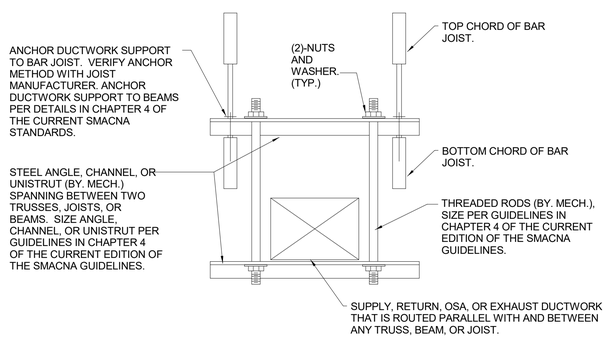

DUCTWORK ROUTED PARALLEL TO JOISTS

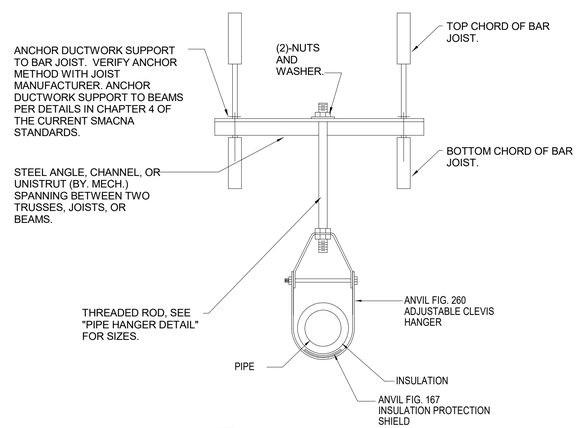

NOTE:
PIPING MAY BE GROUPED TO TRAPEZE HANGERS. SEE SPECIFICATION SECTION 15050.

PIPING ROUTED PARALLEL TO JOISTS

DUCTWORK AND PIPING ROUTED PARALLEL TO JOIST - SUPPORT DETAIL
NOT TO SCALE

THOMAS M. McELRATH, ARCHITECT
ARCHITECTURE and SPACE PLANNING
717 MERIT SPRINGS ROAD
GADSDEN, ALABAMA 35901
PHONE: (256) 490-8244
EMAIL: TOM@TMM-ARCHITECT.COM

A NEW FIRE STATION NO. 1
located at
3170 Highway 77
for the
City of Southside, Alabama

MECHANICAL DETAILS

DRAWN	RBG
CHECKED	JWS
SCALE	AS NOTED
DATE	NOVEMBER 15, 2021
FILE	
JOB NO.	21-01
REVISIONS	

SHEET M0.5 OF XX SHEETS

Global Plasma Solutions

10 Mall Terrace, Building C
Savannah, GA 31406
Phone: (912) 356-0115 Fax: (912) 356-0114
Email: info@globalplasmasolutions.com Web: www.globalplasmasolutions.com
VERSION 1.5 running ASHRAE 62.1-2013

Zone Tag	Facility Type	Zone Use	Zone Floor Area (square ft) Az	Zone Max Occupancy Pz	Table 6.1 OA per Occupant Rp	Table 6.1 cfm/ft2 Ra	Pz * Rp	Az * Ra	Table 6.2 Ventilation Effectiveness Ez	Outdoor Air to Zone (CFM) with Ez correction (Vbz/Ez)
105 - Office	General	Office Space	206.0	1.0	5.0	0.06	5	12	0.8	22
										OA required per VRP

Zone Height (feet)	9
Desired Outside Air (Vo) IAQP	5
Supply Air (Vs)	170
Return Air (Vr)	170
Recirc. Flow Factor (R)	0.80
Ventilation Effectiveness (Ez)	0.8
Level of Physical Activity	**Sedentary**
Filter Location	B
HVAC Flow Type	Constant
Outdoor Air Flow Type	Constant

Air Changes Per Hour	5.5	VRP OA CFM per person	21.7
Outside Air Per VRP	22 CFM	IAQ OA CFM per person	5.0
Outside Air Per IAQ	5 CFM		
Outside Air Savings	17 CFM	Winter Heating Savings	
OA Summer Drybulb	95.0	OA Winter Design DB (F)	18
OA Summer Wetbulb	78.0	Supply Air DB Setpoint (F)	70
Coil Leaving Air Drybulb (F)	58.0	MBH Saved Winter	0.9
Coil Leaving Air Wetbulb (F)	57.7	KW Saved Winter	0.3
OA MBH Saved Summer*	#NAME?		
OA Tons Saved Summer*	#NAME?		

*OA = Outside Air
***OSHA, NIOSH & WHO most conservative values used
http://www.cdc.gov/niosh/npg/npgsyn-a.html

Indoor Contaminants Generated By People & From Outdoors	Maximum Threshold Value (PPM)	Steady State Using the VRP* (Prescribed OA) Plasma Off	Steady State Using the IAQ Method (Reduced OA) Plasma On	Is Steady State Level Acceptable at Reduced OA Levels?	Contaminant Generation Rate (PPM)	Filtration Effectiveness	Cognizant Authority***
Acetaldehyde	100.0	0.01111	0.00039	Yes	0.00032	50%	OSHA
Acetone	250.0	0.00151	0.00012	Yes	0.00433	50%	NIOSH
Ammonia	25.00	0.00991	0.00249	Yes	0.14210	50%	NIOSH
Benzene	1.0000	0.00251	0.00009	Yes	0.00015	50%	OSHA
2- Butanone (MEK)	200.0	0.00015	0.00002	Yes	0.00088	50%	NIOSH
Carbon dioxide**	5000	876	2469	Yes	292	0%	NIOSH
Chloroform	2.0000	0.00011	0.00000	Yes	0.00003	50%	NIOSH
Dioxane	100.0	0.00000	0.00000	Yes	0.00000	50%	OSHA
Hydrogen Sulfide	10.0	0.00000	0.00000	Yes	0.00000	50%	NIOSH
Methane	NA	1.68094	1.68094	Yes	0.00000	0%	NA
Methanol	200.0	0.00000	0.00000	Yes	0.00000	0%	NIOSH
Methylene Chloride	25.0	0.00074	0.00004	Yes	0.00080	50%	OSHA
Propane	1000.0	0.00998	0.00998	Yes	0.00000	0%	NIOSH
Tetrachloroethane	5.0000	0.00000	0.00000	Yes	0.00000	50%	OSHA
Tetrachloroethylene	100.0000	0.00037	0.00001	Yes	0.00001	50%	OSHA
Toluene	100.0000	0.00532	0.00019	Yes	0.00021	50%	NIOSH
1,1,1 - Trichloroethane	350.0000	0.00076	0.00003	Yes	0.00038	50%	NIOSH
Xylene	100.0000	0.00230	0.00008	Yes	0.00000	50%	OSHA

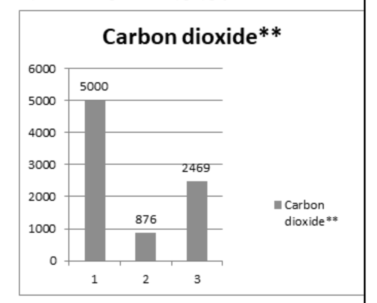

1 = ASHRAE & NIOSH C02 Limit
2 = C02 Level at Ventilation Rate OA Flow Rate
3 = C02 Level at IAQ Procedure OA Flow Rate

**Carbon dioxide has been provided for reference only for gathering demand control ventilation (DCV) setpoints. The National Research Council was commissioned by the US Navy to prove C02 is not a contaminant of concern when using air purification to control the other contaminants of concern, as found on submarines.

Building materials and furnishings assumed to have no VOCs and off-gassing is complete
All yellow shaded boxes require user input or review

Is IAQ acceptable at reduced outside air levels?	Yes

GLOBAL PLASMA SOLUTIONS INDOOR AIR QUALITY SOFTWARE©
COPYRIGHT 2008 GLOBAL PLASMA SOLUTIONS, LLC - ALL RIGHTS RESERVED
UNAUTHORIZED USE OR COPYING STRICTLY PROHIBITED

Global Plasma Solutions

10 Mall Terrace, Building C
Savannah, GA 31406
Phone: (912) 356-0115 Fax: (912) 356-0114
Email: info@globalplasmasolutions.com Web: www.globalplasmasolutions.com
VERSION 1.5 running ASHRAE 62.1-2013

Zone Tag	Facility Type	Zone Use	Zone Floor Area (square ft) Az	Zone Max Occupancy Pz	Table 6.1 OA per Occupant Rp	Table 6.1 cfm/ft2 Ra	Pz * Rp	Az * Ra	Table 6.2 Ventilation Effectiveness Ez	Outdoor Air to Zone (CFM) with Ez correction (Vbz/Ez)
107 - Work Room	General	Office Space	92.0	4.0	5.0	0.06	20	6	0.8	32
										OA required per VRP

Zone Height (feet)	9
Desired Outside Air (Vo) IAQP	20
Supply Air (Vs)	120
Return Air (Vr)	120
Recirc. Flow Factor (R)	0.80
Ventilation Effectiveness (Ez)	0.8
Level of Physical Activity	**Sedentary**
Filter Location	B
HVAC Flow Type	Constant
Outdoor Air Flow Type	Constant

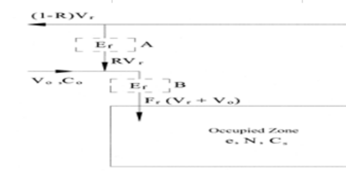

Air Changes Per Hour	8.7	VRP OA CFM per person	8.0
Outside Air Per VRP	32 CFM	IAQ OA CFM per person	5.0
Outside Air Per IAQ	20 CFM		
Outside Air Savings	12 CFM	Winter Heating Savings	
OA Summer Drybulb	95.0	OA Winter Design DB (F)	18
OA Summer Wetbulb	78.0	Supply Air DB Setpoint (F)	70
Coil Leaving Air Drybulb (F)	58.0	MBH Saved Winter	0.7
Coil Leaving Air Wetbulb (F)	57.7	KW Saved Winter	0.2
OA MBH Saved Summer*	#NAME?		
OA Tons Saved Summer*	#NAME?		

*OA = Outside Air
***OSHA, NIOSH & WHO most conservative values used
http://www.cdc.gov/niosh/npg/npgsyn-a.html

Indoor Contaminants Generated By People & From Outdoors	Maximum Threshold Value (PPM)	Steady State Using the VRP* (Prescribed OA) Plasma Off	Steady State Using the IAQ Method (Reduced OA) Plasma On	Is Steady State Level Acceptable at Reduced OA Levels?	Contaminant Generation Rate (PPM)	Filtration Effectiveness	Cognizant Authority***
Acetaldehyde	100.0	0.01114	0.00165	Yes	0.00032	50%	OSHA
Acetone	250.0	0.00194	0.00050	Yes	0.00433	50%	NIOSH
Ammonia	25.00	0.02400	0.01070	Yes	0.14210	50%	NIOSH
Benzene	1.0000	0.00253	0.00038	Yes	0.00015	50%	OSHA
2- Butanone (MEK)	200.0	0.00024	0.00008	Yes	0.00088	50%	NIOSH
Carbon dioxide**	5000	1696	2469	Yes	292	0%	NIOSH
Chloroform	2.0000	0.00011	0.00002	Yes	0.00003	50%	NIOSH
Dioxane	100.0	0.00000	0.00000	Yes	0.00000	50%	OSHA
Hydrogen Sulfide	10.0	0.00000	0.00000	Yes	0.00000	50%	NIOSH
Methane	NA	1.68094	1.68094	Yes	0.00000	0%	NA
Methanol	200.0	0.00000	0.00000	Yes	0.00000	0%	NIOSH
Methylene Chloride	25.0	0.00082	0.00016	Yes	0.00080	50%	OSHA
Propane	1000.0	0.00998	0.00998	Yes	0.00000	0%	NIOSH
Tetrachloroethane	5.0000	0.00000	0.00000	Yes	0.00000	50%	OSHA
Tetrachloroethylene	100.0000	0.00037	0.00005	Yes	0.00001	50%	OSHA
Toluene	100.0000	0.00534	0.00080	Yes	0.00021	50%	NIOSH
1,1,1 - Trichloroethane	350.0000	0.00079	0.00014	Yes	0.00038	50%	NIOSH
Xylene	100.0000	0.00230	0.00034	Yes	0.00000	50%	OSHA

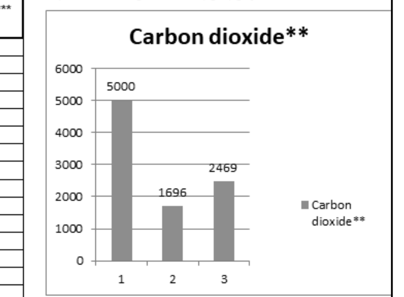

1 = ASHRAE & NIOSH C02 Limit
2 = C02 Level at Ventilation Rate OA Flow Rate
3 = C02 Level at IAQ Procedure OA Flow Rate

**Carbon dioxide has been provided for reference only for gathering demand control ventilation (DCV) setpoints. The National Research Council was commissioned by the US Navy to prove C02 is not a contaminant of concern when using air purification to control the other contaminants of concern, as found on submarines.

Building materials and furnishings assumed to have no VOCs and off-gassing is complete
All yellow shaded boxes require user input or review

Is IAQ acceptable at reduced outside air levels?	Yes

GLOBAL PLASMA SOLUTIONS INDOOR AIR QUALITY SOFTWARE©
COPYRIGHT 2008 GLOBAL PLASMA SOLUTIONS, LLC - ALL RIGHTS RESERVED
UNAUTHORIZED USE OR COPYING STRICTLY PROHIBITED

Global Plasma Solutions

10 Mall Terrace, Building C
Savannah, GA 31406
Phone: (912) 356-0115 Fax: (912) 356-0114
Email: info@globalplasmasolutions.com Web: www.globalplasmasolutions.com
VERSION 1.5 running ASHRAE 62.1-2013

Zone Tag	Facility Type	Zone Use	Zone Floor Area (square ft) Az	Zone Max Occupancy Pz	Table 6.1 OA per Occupant Rp	Table 6.1 cfm/ft2 Ra	Pz * Rp	Az * Ra	Table 6.2 Ventilation Effectiveness Ez	Outdoor Air to Zone (CFM) with Ez correction (Vbz/Ez)
111 - Radio Room	General	Office Space	151.0	2.0	5.0	0.06	10	9	0.8	24
										OA required per VRP

Zone Height (feet)	9
Desired Outside Air (Vo) IAQP	10
Supply Air (Vs)	200
Return Air (Vr)	200
Recirc. Flow Factor (R)	0.80
Ventilation Effectiveness (Ez)	0.8
Level of Physical Activity	**Sedentary**
Filter Location	B
HVAC Flow Type	Constant
Outdoor Air Flow Type	Constant

Air Changes Per Hour	8.8	VRP OA CFM per person	11.9
Outside Air Per VRP	24 CFM	IAQ OA CFM per person	5.0
Outside Air Per IAQ	10 CFM		
Outside Air Savings	14 CFM	Winter Heating Savings	
OA Summer Drybulb	95.0	OA Winter Design DB (F)	18
OA Summer Wetbulb	78.0	Supply Air DB Setpoint (F)	70
Coil Leaving Air Drybulb (F)	58.0	MBH Saved Winter	0.8
Coil Leaving Air Wetbulb (F)	57.7	KW Saved Winter	0.2
OA MBH Saved Summer*	#NAME?		
OA Tons Saved Summer*	#NAME?		

*OA = Outside Air
***OSHA, NIOSH & WHO most conservative values used
http://www.cdc.gov/niosh/npg/npgsyn-a.html

Indoor Contaminants Generated By People & From Outdoors	Maximum Threshold Value (PPM)	Steady State Using the VRP* (Prescribed OA) Plasma Off	Steady State Using the IAQ Method (Reduced OA) Plasma On	Is Steady State Level Acceptable at Reduced OA Levels?	Contaminant Generation Rate (PPM)	Filtration Effectiveness	Cognizant Authority***
Acetaldehyde	100.0	0.01112	0.00062	Yes	0.00032	50%	OSHA
Acetone	250.0	0.00172	0.00019	Yes	0.00433	50%	NIOSH
Ammonia	25.00	0.01664	0.00404	Yes	0.14210	50%	NIOSH
Benzene	1.0000	0.00252	0.00014	Yes	0.00015	50%	OSHA
2- Butanone (MEK)	200.0	0.00019	0.00003	Yes	0.00088	50%	NIOSH
Carbon dioxide**	5000	1267	2469	Yes	292	0%	NIOSH
Chloroform	2.0000	0.00011	0.00001	Yes	0.00003	50%	NIOSH
Dioxane	100.0	0.00000	0.00000	Yes	0.00000	50%	OSHA
Hydrogen Sulfide	10.0	0.00000	0.00000	Yes	0.00000	50%	NIOSH
Methane	NA	1.68094	1.68094	Yes	0.00000	0%	NA
Methanol	200.0	0.00000	0.00000	Yes	0.00000	0%	NIOSH
Methylene Chloride	25.0	0.00078	0.00006	Yes	0.00080	50%	OSHA
Propane	1000.0	0.00998	0.00998	Yes	0.00000	0%	NIOSH
Tetrachloroethane	5.0000	0.00000	0.00000	Yes	0.00000	50%	OSHA
Tetrachloroethylene	100.0000	0.00037	0.00002	Yes	0.00001	50%	OSHA
Toluene	100.0000	0.00533	0.00030	Yes	0.00021	50%	NIOSH
1,1,1 - Trichloroethane	350.0000	0.00077	0.00005	Yes	0.00038	50%	NIOSH
Xylene	100.0000	0.00230	0.00013	Yes	0.00000	50%	OSHA

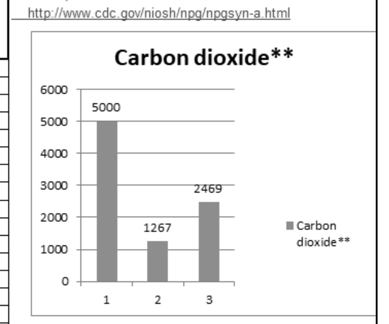

1 = ASHRAE & NIOSH C02 Limit
2 = C02 Level at Ventilation Rate OA Flow Rate
3 = C02 Level at IAQ Procedure OA Flow Rate

**Carbon dioxide has been provided for reference only for gathering demand control ventilation (DCV) setpoints. The National Research Council was commissioned by the US Navy to prove C02 is not a contaminant of concern when using air purification to control the other contaminants of concern, as found on submarines.

Building materials and furnishings assumed to have no VOCs and off-gassing is complete
All yellow shaded boxes require user input or review

Is IAQ acceptable at reduced outside air levels?	Yes

GLOBAL PLASMA SOLUTIONS INDOOR AIR QUALITY SOFTWARE©
COPYRIGHT 2008 GLOBAL PLASMA SOLUTIONS, LLC - ALL RIGHTS RESERVED
UNAUTHORIZED USE OR COPYING STRICTLY PROHIBITED

Global Plasma Solutions

10 Mall Terrace, Building C
Savannah, GA 31406
Phone: (912) 356-0115 Fax: (912) 356-0114
Email: info@globalplasmasolutions.com Web: www.globalplasmasolutions.com
VERSION 1.5 running ASHRAE 62.1-2013

Zone Tag	Facility Type	Zone Use	Zone Floor Area (square ft) Az	Zone Max Occupancy Pz	Table 6.1 OA per Occupant Rp	Table 6.1 cfm/ft2 Ra	Pz * Rp	Az * Ra	Table 6.2 Ventilation Effectiveness Ez	Outdoor Air to Zone (CFM) with Ez correction (Vbz/Ez)
115 - Dayroom & Dining	General	Day room	777.0	10.0	5.0	0.06	50	47	0.8	121
										OA required per VRP

Zone Height (feet)	9
Desired Outside Air (Vo) IAQP	50
Supply Air (Vs)	1,000
Return Air (Vr)	1000
Recirc. Flow Factor (R)	0.80
Ventilation Effectiveness (Ez)	0.8
Level of Physical Activity	**Sedentary**
Filter Location	B
HVAC Flow Type	Constant
Outdoor Air Flow Type	Constant

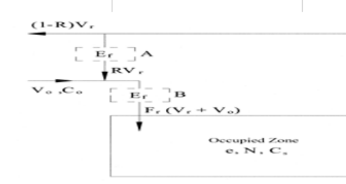

Air Changes Per Hour	8.6	VRP OA CFM per person	12.1
Outside Air Per VRP	121 CFM	IAQ OA CFM per person	5.0
Outside Air Per IAQ	50 CFM		
Outside Air Savings	71 CFM	Winter Heating Savings	
OA Summer Drybulb	95.0	OA Winter Design DB (F)	18
OA Summer Wetbulb	78.0	Supply Air DB Setpoint (F)	70
Coil Leaving Air Drybulb (F)	58.0	MBH Saved Winter	4.0
Coil Leaving Air Wetbulb (F)	57.7	KW Saved Winter	1.2
OA MBH Saved Summer*	#NAME?		
OA Tons Saved Summer*	#NAME?		

*OA = Outside Air
***OSHA, NIOSH & WHO most conservative values used
http://www.cdc.gov/niosh/npg/npgsyn-a.html

Indoor Contaminants Generated By People & From Outdoors	Maximum Threshold Value (PPM)	Steady State Using the VRP* (Prescribed OA) Plasma Off	Steady State Using the IAQ Method (Reduced OA) Plasma On	Is Steady State Level Acceptable at Reduced OA Levels?	Contaminant Generation Rate (PPM)	Filtration Effectiveness	Cognizant Authority***
Acetaldehyde	100.0	0.01112	0.00062	Yes	0.00032	50%	OSHA
Acetone	250.0	0.00171	0.00019	Yes	0.00433	50%	NIOSH
Ammonia	25.00	0.01643	0.00404	Yes	0.14210	50%	NIOSH
Benzene	1.0000	0.00252	0.00014	Yes	0.00015	50%	OSHA
2- Butanone (MEK)	200.0	0.00019	0.00003	Yes	0.00088	50%	NIOSH
Carbon dioxide**	5000	1256	2469	Yes	292	0%	NIOSH
Chloroform	2.0000	0.00011	0.00001	Yes	0.00003	50%	NIOSH
Dioxane	100.0	0.00000	0.00000	Yes	0.00000	50%	OSHA
Hydrogen Sulfide	10.0	0.00000	0.00000	Yes	0.00000	50%	NIOSH
Methane	NA	1.68094	1.68094	Yes	0.00000	0%	NA
Methanol	200.0	0.00000	0.00000	Yes	0.00000	0%	NIOSH
Methylene Chloride	25.0	0.00077	0.00006	Yes	0.00080	50%	OSHA
Propane	1000.0	0.00998	0.00998	Yes	0.00000	0%	NIOSH
Tetrachloroethane	5.0000	0.00000	0.00000	Yes	0.00000	50%	OSHA
Tetrachloroethylene	100.0000	0.00037	0.00002	Yes	0.00001	50%	OSHA
Toluene	100.0000	0.00533	0.00030	Yes	0.00021	50%	NIOSH
1,1,1 - Trichloroethane	350.0000	0.00077	0.00005	Yes	0.00038	50%	NIOSH
Xylene	100.0000	0.00230	0.00013	Yes	0.00000	50%	OSHA

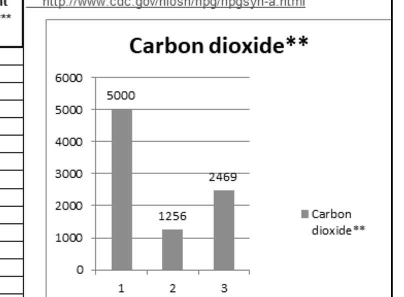

1 = ASHRAE & NIOSH C02 Limit
2 = C02 Level at Ventilation Rate OA Flow Rate
3 = C02 Level at IAQ Procedure OA Flow Rate

**Carbon dioxide has been provided for reference only for gathering demand control ventilation (DCV) setpoints. The National Research Council was commissioned by the US Navy to prove C02 is not a contaminant of concern when using air purification to control the other contaminants of concern, as found on submarines.

Building materials and furnishings assumed to have no VOCs and off-gassing is complete
All yellow shaded boxes require user input or review

Is IAQ acceptable at reduced outside air levels?	Yes

GLOBAL PLASMA SOLUTIONS INDOOR AIR QUALITY SOFTWARE©
COPYRIGHT 2008 GLOBAL PLASMA SOLUTIONS, LLC - ALL RIGHTS RESERVED
UNAUTHORIZED USE OR COPYING STRICTLY PROHIBITED

Global Plasma Solutions

10 Mall Terrace, Building C
Savannah, GA 31406
Phone: (912) 356-0115 Fax: (912) 356-0114
Email: info@globalplasmasolutions.com Web: www.globalplasmasolutions.com
VERSION 1.5 running ASHRAE 62.1-2013

Zone Tag	Facility Type	Zone Use	Zone Floor Area (square ft) Az	Zone Max Occupancy Pz	Table 6.1 OA per Occupant Rp	Table 6.1 cfm/ft2 Ra	Pz * Rp	Az * Ra	Table 6.2 Ventilation Effectiveness Ez	Outdoor Air to Zone (CFM) with Ez correction (Vbz/Ez)
104 - Office	General	Office Space	150.0	1.0	5.0	0.06	5	9	0.8	18
										OA required per VRP

Zone Height (feet)	9
Desired Outside Air (Vo) IAQP	5
Supply Air (Vs)	140
Return Air (Vr)	140
Recirc. Flow Factor (R)	0.80
Ventilation Effectiveness (Ez)	0.8
Level of Physical Activity	**Sedentary**
Filter Location	B
HVAC Flow Type	Constant
Outdoor Air Flow Type	Constant

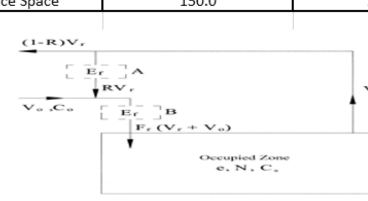

Air Changes Per Hour	6.2	VRP OA CFM per person	17.5
Outside Air Per VRP	18 CFM	IAQ OA CFM per person	5.0
Outside Air Per IAQ	5 CFM		
Outside Air Savings	13 CFM	Winter Heating Savings	
OA Summer Drybulb	95.0	OA Winter Design DB (F)	18
OA Summer Wetbulb	78.0	Supply Air DB Setpoint (F)	70
Coil Leaving Air Drybulb (F)	58.0	MBH Saved Winter	0.7
Coil Leaving Air Wetbulb (F)	57.7	KW Saved Winter	0.2
OA MBH Saved Summer*	#NAME?		
OA Tons Saved Summer*	#NAME?		

*OA = Outside Air
***OSHA, NIOSH & WHO most conservative values used
http://www.cdc.gov/niosh/npg/npgsyn-a.html

Indoor Contaminants Generated By People & From Outdoors	Maximum Threshold Value (PPM)	Steady State Using the VRP* (Prescribed OA) Plasma Off	Steady State Using the IAQ Method (Reduced OA) Plasma On	Is Steady State Level Acceptable at Reduced OA Levels?	Contaminant Generation Rate (PPM)	Filtration Effectiveness	Cognizant Authority***
Acetaldehyde	100.0	0.01111	0.00046	Yes	0.00032	50%	OSHA
Acetone	250.0	0.00157	0.00014	Yes	0.00433	50%	NIOSH
Ammonia	25.00	0.01188	0.00298	Yes	0.14210	50%	NIOSH
Benzene	1.0000	0.00251	0.00011	Yes	0.00015	50%	OSHA
2- Butanone (MEK)	200.0	0.00016	0.00002	Yes	0.00088	50%	NIOSH
Carbon dioxide**	5000	990	2469	Yes	292	0%	NIOSH
Chloroform	2.0000	0.00011	0.00000	Yes	0.00003	50%	NIOSH
Dioxane	100.0	0.00000	0.00000	Yes	0.00000	50%	OSHA
Hydrogen Sulfide	10.0	0.00000	0.00000	Yes	0.00000	50%	NIOSH
Methane	NA	1.68094	1.68094	Yes	0.00000	0%	NA
Methanol	200.0	0.00000	0.00000	Yes	0.00000	0%	NIOSH
Methylene Chloride	25.0	0.00075	0.00004	Yes	0.00080	50%	OSHA
Propane	1000.0	0.00998	0.00998	Yes	0.00000	0%	NIOSH
Tetrachloroethane	5.0000	0.00000	0.00000	Yes	0.00000	50%	OSHA
Tetrachloroethylene	100.0000	0.00037	0.00002	Yes	0.00001	50%	OSHA
Toluene	100.0000	0.00532	0.00022	Yes	0.00021	50%	NIOSH
1,1,1 - Trichloroethane	350.0000	0.00076	0.00004	Yes	0.00038	50%	NIOSH
Xylene	100.0000	0.00230	0.00009	Yes	0.00000	50%	OSHA

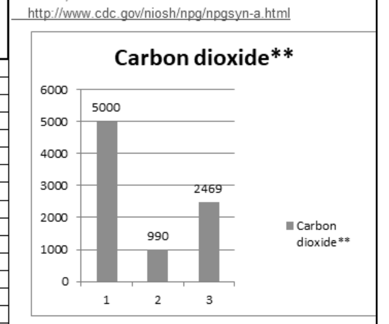

1 = ASHRAE & NIOSH C02 Limit
2 = C02 Level at Ventilation Rate OA Flow Rate
3 = C02 Level at IAQ Procedure OA Flow Rate

**Carbon dioxide has been provided for reference only for gathering demand control ventilation (DCV) setpoints. The National Research Council was commissioned by the US Navy to prove C02 is not a contaminant of concern when using air purification to control the other contaminants of concern, as found on submarines.

Building materials and furnishings assumed to have no VOCs and off-gassing is complete
All yellow shaded boxes require user input or review

Is IAQ acceptable at reduced outside air levels?	Yes

GLOBAL PLASMA SOLUTIONS INDOOR AIR QUALITY SOFTWARE©
COPYRIGHT 2008 GLOBAL PLASMA SOLUTIONS, LLC - ALL RIGHTS RESERVED
UNAUTHORIZED USE OR COPYING STRICTLY PROHIBITED

Global Plasma Solutions

10 Mall Terrace, Building C
Savannah, GA 31406
Phone: (912) 356-0115 Fax: (912) 356-0114
Email: info@globalplasmasolutions.com Web: www.globalplasmasolutions.com
VERSION 1.5 running ASHRAE 62.1-2013

Zone Tag	Facility Type	Zone Use	Zone Floor Area (square ft) Az	Zone Max Occupancy Pz	Table 6.1 OA per Occupant Rp	Table 6.1 cfm/ft2 Ra	Pz * Rp	Az * Ra	Table 6.2 Ventilation Effectiveness Ez	Outdoor Air to Zone (CFM) with Ez correction (Vbz/Ez)
Typical Bunk	General	Barracks/Sleeping areas	90.0	1.0	5.0	0.06	5	5	0.8	13
										OA required per VRP

Zone Height (feet)	9
Desired Outside Air (Vo) IAQP	5
Supply Air (Vs)	80
Return Air (Vr)	80
Recirc. Flow Factor (R)	0.80
Ventilation Effectiveness (Ez)	0.8
Level of Physical Activity	**Sedentary**
Filter Location	B
HVAC Flow Type	Constant
Outdoor Air Flow Type	Constant

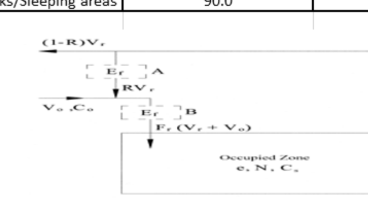

Air Changes Per Hour	5.9	VRP OA CFM per person	13.0
Outside Air Per VRP	13 CFM	IAQ OA CFM per person	5.0
Outside Air Per IAQ	5 CFM		
Outside Air Savings	8 CFM	Winter Heating Savings	
OA Summer Drybulb	95.0	OA Winter Design DB (F)	18
OA Summer Wetbulb	78.0	Supply Air DB Setpoint (F)	70
Coil Leaving Air Drybulb (F)	58.0	MBH Saved Winter	0.5
Coil Leaving Air Wetbulb (F)	57.7	KW Saved Winter	0.1
OA MBH Saved Summer*	#NAME?		
OA Tons Saved Summer*	#NAME?		

*OA = Outside Air
***OSHA, NIOSH & WHO most conservative values used
http://www.cdc.gov/niosh/npg/npgsyn-a.html

Indoor Contaminants Generated By People & From Outdoors	Maximum Threshold Value (PPM)	Steady State Using the VRP* (Prescribed OA) Plasma Off	Steady State Using the IAQ Method (Reduced OA) Plasma On	Is Steady State Level Acceptable at Reduced OA Levels?	Contaminant Generation Rate (PPM)	Filtration Effectiveness	Cognizant Authority***
Acetaldehyde	100.0	0.01112	0.00076	Yes	0.00032	50%	OSHA
Acetone	250.0	0.00168	0.00023	Yes	0.00433	50%	NIOSH
Ammonia	25.00	0.01539	0.00492	Yes	0.14210	50%	NIOSH
Benzene	1.0000	0.00252	0.00017	Yes	0.00015	50%	OSHA
2- Butanone (MEK)	200.0	0.00019	0.00004	Yes	0.00088	50%	NIOSH
Carbon dioxide**	5000	1195	2469	Yes	292	0%	NIOSH
Chloroform	2.0000	0.00011	0.00001	Yes	0.00003	50%	NIOSH
Dioxane	100.0	0.00000	0.00000	Yes	0.00000	50%	OSHA
Hydrogen Sulfide	10.0	0.00000	0.00000	Yes	0.00000	50%	NIOSH
Methane	NA	1.68094	1.68094	Yes	0.00000	0%	NA
Methanol	200.0	0.00000	0.00000	Yes	0.00000	0%	NIOSH
Methylene Chloride	25.0	0.00077	0.00007	Yes	0.00080	50%	OSHA
Propane	1000.0	0.00998	0.00998	Yes	0.00000	0%	NIOSH
Tetrachloroethane	5.0000	0.00000	0.00000	Yes	0.00000	50%	OSHA
Tetrachloroethylene	100.0000	0.00037	0.00003	Yes	0.00001	50%	OSHA
Toluene	100.0000	0.00533	0.00037	Yes	0.00021	50%	NIOSH
1,1,1 - Trichloroethane	350.0000	0.00077	0.00006	Yes	0.00038	50%	NIOSH
Xylene	100.0000	0.00230	0.00016	Yes	0.00000	50%	OSHA

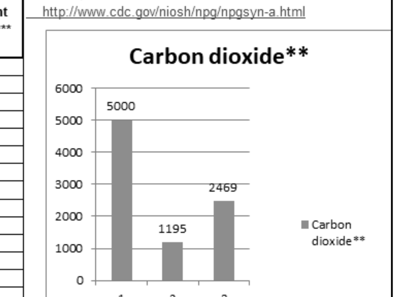

1 = ASHRAE & NIOSH C02 Limit
2 = C02 Level at Ventilation Rate OA Flow Rate
3 = C02 Level at IAQ Procedure OA Flow Rate

**Carbon dioxide has been provided for reference only for gathering demand control ventilation (DCV) setpoints. The National Research Council was commissioned by the US Navy to prove C02 is not a contaminant of concern when using air purification to control the other contaminants of concern, as found on submarines.

Building materials and furnishings assumed to have no VOCs and off-gassing is complete
All yellow shaded boxes require user input or review

Is IAQ acceptable at reduced outside air levels?	Yes

GLOBAL PLASMA SOLUTIONS INDOOR AIR QUALITY SOFTWARE©
COPYRIGHT 2008 GLOBAL PLASMA SOLUTIONS, LLC - ALL RIGHTS RESERVED
UNAUTHORIZED USE OR COPYING STRICTLY PROHIBITED

Dewberry | EDMONDS
2 Riverchase Office Plaza
Suite 205
Hoover, AL 35244
(205) 988-2069
www.dewberry.com

Project Number :
50145027

ALABAMA LICENSED No. 24747 PROFESSIONAL ENGINEER WADE STEWART
11-15-2021

THOMAS M. McELRATH, ARCHITECT
ARCHITECTURE and SPACE PLANNING
717 MERIT SPRINGS ROAD
GADSDEN, ALABAMA 35901
PHONE: (256) 490-8244
EMAIL: TOM@TMM-ARCHITECT.COM

A NEW FIRE STATION NO. 1
located at
3170 Highway 77
for the
City of Southside, Alabama

MECHANICAL
OSA
CALCULATIONS

DRAWN	RBG
CHECKED	JWS
SCALE	AS NOTED
DATE	NOVEMBER 15, 2021
FILE	
JOB NO.	21-01
REVISIONS	

SHEET
M0.6
OF
XX
SHEETS

Dewberry | EDMONDS
2 Riverchase Office Plaza
Suite 205
Hoover, AL 35244
(205) 988-2069
www.dewberry.com

Project Number :
50145027

ALABAMA LICENSED No. 24747 PROFESSIONAL ENGINEER WADE STEWART 11-15-2021

THOMAS M. McELRATH, ARCHITECT
ARCHITECTURE and SPACE PLANNING
717 MERIT SPRINGS ROAD
GADSDEN, ALABAMA 35901
PHONE: (256) 490-8244
EMAIL: TOM@TMM-ARCHITECT.COM

A NEW FIRE STATION NO. 1
located at
3170 Highway 77
for the
City of Southside, Alabama

Global Plasma Solutions

10 Mall Terrace, Building C
Savannah, GA 31406
Phone: (912) 356-0115 Fax: (912) 356-0114
Email: info@globalplasmasolutions.com Web: www.globalplasmasolutions.com
VERSION 1.5 running ASHRAE 62.1-2013

Zone Tag	Facility Type	Zone Use	Zone Floor Area (square ft) Az	Zone Max Occupancy Pz	Table 6.1 OA per Occupant Rp	Table 6.1 cfm/ft2 Ra	Pz * Rp / Pz * Rp	Az * Ra / Az * Ra	Table 6.2 Ventilation Effectiveness Ez	Outdoor Air to Zone (CFM) with Ez correction (Vbz/Ez)
101 - Classroom & Training Room	General	Conference/Meeting	519.0	35.0	5.0	0.06	175	31	0.8	258
										OA required per VRP

Zone Height (feet)	9
Desired Outside Air (Vo) IAQP	175
Supply Air (Vs)	920
Return Air (Vr)	920
Recirc. Flow Factor (R)	0.80
Ventilation Effectiveness (Ez)	0.8
Level of Physical Activity	**Sedentary**
Filter Location	B
HVAC Flow Type	Constant
Outdoor Air Flow Type	Constant

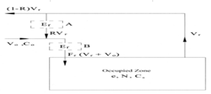

Air Changes Per Hour	11.8	VRP OA CFM per person	7.4
Outside Air Per VRP	258 CFM	IAQ OA CFM per person	5.0
Outside Air Per IAQ	175 CFM		
Outside Air Savings	83 CFM	Winter Heating Savings	
OA Summer Drybulb	95.0	OA Winter Design DB (F)	18
OA Summer Wetbulb	78.0	Supply Air DB Setpoint (F)	70
Coil Leaving Air Drybulb (F)	58.0	MBH Saved Winter	4.7
Coil Leaving Air Wetbulb (F)	57.7	KW Saved Winter	1.4
OA MBH Saved Summer*	#NAME?		
OA Tons Saved Summer*	#NAME?		

*OA = Outside Air
***OSHA, NIOSH & WHO most conservative values used
http://www.cdc.gov/niosh/npg/npgsyn-a.html

Indoor Contaminants Generated By People & From Outdoors	Maximum Threshold Value (PPM)	Steady State Using the VRP* (Prescribed OA) Plasma Off	Steady State Using the IAQ Method (Reduced OA) Plasma On	Is Steady State Level Acceptable at Reduced OA Levels?	Contaminant Generation Rate (PPM)	Filtration Effectiveness	Cognizant Authority***
Acetaldehyde	100.0	0.01114	0.00181	Yes	0.00032	50%	OSHA
Acetone	250.0	0.00200	0.00055	Yes	0.00433	50%	NIOSH
Ammonia	25.00	0.02585	0.01173	Yes	0.14210	50%	NIOSH
Benzene	1.0000	0.00253	0.00042	Yes	0.00015	50%	OSHA
2- Butanone (MEK)	200.0	0.00025	0.00009	Yes	0.00088	50%	NIOSH
Carbon dioxide**	5000	1804	2469	Yes	292	0%	NIOSH
Chloroform	2.0000	0.00011	0.00002	Yes	0.00003	50%	NIOSH
Dioxane	100.0	0.00000	0.00000	Yes	0.00000	50%	OSHA
Hydrogen Sulfide	10.0	0.00000	0.00000	Yes	0.00000	50%	NIOSH
Methane	NA	1.68094	1.68094	Yes	0.00000	0%	NA
Methanol	200.0	0.00000	0.00000	Yes	0.00000	0%	NIOSH
Methylene Chloride	25.0	0.00083	0.00018	Yes	0.00080	50%	OSHA
Propane	1000.0	0.00998	0.00998	Yes	0.00000	0%	NIOSH
Tetrachloroethane	5.0000	0.00000	0.00000	Yes	0.00000	50%	OSHA
Tetrachloroethylene	100.0000	0.00037	0.00006	Yes	0.00001	50%	OSHA
Toluene	100.0000	0.00535	0.00087	Yes	0.00021	50%	NIOSH
1,1,1 - Trichloroethane	350.0000	0.00080	0.00015	Yes	0.00038	50%	NIOSH
Xylene	100.0000	0.00230	0.00037	Yes	0.00000	50%	OSHA

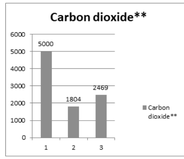

1 = ASHRAE & NIOSH C02 Limit
2 = C02 Level at Ventilation Rate OA Flow Rate
3 = C02 Level at IAQ Procedure OA Flow Rate

**Carbon dioxide has been provided for reference only for gathering demand control ventilation (DCV) setpoints. The National Research Council was commissioned by the US Navy to prove C02 is not a contaminant of concern when using air purification to control the other contaminants of concern, as found on submarines.

Building materials and furnishings assumed to have no VOCs and off-gassing is complete
All yellow shaded boxes require user input or review

Is IAQ acceptable at reduced outside air levels? Yes

GLOBAL PLASMA SOLUTIONS INDOOR AIR QUALITY SOFTWARE©
COPYRIGHT 2008 GLOBAL PLASMA SOLUTIONS, LLC - ALL RIGHTS RESERVED
UNAUTHORIZED USE OR COPYING STRICTLY PROHIBITED

Global Plasma Solutions

10 Mall Terrace, Building C
Savannah, GA 31406
Phone: (912) 356-0115 Fax: (912) 356-0114
Email: info@globalplasmasolutions.com Web: www.globalplasmasolutions.com
VERSION 1.5 running ASHRAE 62.1-2013

Zone Tag	Facility Type	Zone Use	Zone Floor Area (square ft) Az	Zone Max Occupancy Pz	Table 6.1 OA per Occupant Rp	Table 6.1 cfm/ft2 Ra	Pz * Rp / Pz * Rp	Az * Ra / Az * Ra	Table 6.2 Ventilation Effectiveness Ez	Outdoor Air to Zone (CFM) with Ez correction (Vbz/Ez)
103 - Office	General	Office Space	150.0	1.0	5.0	0.06	5	9	0.8	18
										OA required per VRP

Zone Height (feet)	9
Desired Outside Air (Vo) IAQP	5
Supply Air (Vs)	140
Return Air (Vr)	140
Recirc. Flow Factor (R)	0.80
Ventilation Effectiveness (Ez)	0.8
Level of Physical Activity	**Sedentary**
Filter Location	B
HVAC Flow Type	Constant
Outdoor Air Flow Type	Constant

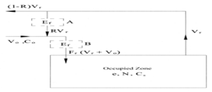

Air Changes Per Hour	6.2	VRP OA CFM per person	17.5
Outside Air Per VRP	18 CFM	IAQ OA CFM per person	5.0
Outside Air Per IAQ	5 CFM		
Outside Air Savings	13 CFM	Winter Heating Savings	
OA Summer Drybulb	95.0	OA Winter Design DB (F)	18
OA Summer Wetbulb	78.0	Supply Air DB Setpoint (F)	70
Coil Leaving Air Drybulb (F)	58.0	MBH Saved Winter	0.7
Coil Leaving Air Wetbulb (F)	57.7	KW Saved Winter	0.2
OA MBH Saved Summer*	#NAME?		
OA Tons Saved Summer*	#NAME?		

*OA = Outside Air
***OSHA, NIOSH & WHO most conservative values used
http://www.cdc.gov/niosh/npg/npgsyn-a.html

Indoor Contaminants Generated By People & From Outdoors	Maximum Threshold Value (PPM)	Steady State Using the VRP* (Prescribed OA) Plasma Off	Steady State Using the IAQ Method (Reduced OA) Plasma On	Is Steady State Level Acceptable at Reduced OA Levels?	Contaminant Generation Rate (PPM)	Filtration Effectiveness	Cognizant Authority***
Acetaldehyde	100.0	0.01111	0.00046	Yes	0.00032	50%	OSHA
Acetone	250.0	0.00157	0.00014	Yes	0.00433	50%	NIOSH
Ammonia	25.00	0.01188	0.00298	Yes	0.14210	50%	NIOSH
Benzene	1.0000	0.00251	0.00011	Yes	0.00015	50%	OSHA
2- Butanone (MEK)	200.0	0.00016	0.00002	Yes	0.00088	50%	NIOSH
Carbon dioxide**	5000	990	2469	Yes	292	0%	NIOSH
Chloroform	2.0000	0.00011	0.00000	Yes	0.00003	50%	NIOSH
Dioxane	100.0	0.00000	0.00000	Yes	0.00000	50%	OSHA
Hydrogen Sulfide	10.0	0.00000	0.00000	Yes	0.00000	50%	NIOSH
Methane	NA	1.68094	1.68094	Yes	0.00000	0%	NA
Methanol	200.0	0.00000	0.00000	Yes	0.00000	0%	NIOSH
Methylene Chloride	25.0	0.00075	0.00004	Yes	0.00080	50%	OSHA
Propane	1000.0	0.00998	0.00998	Yes	0.00000	0%	NIOSH
Tetrachloroethane	5.0000	0.00000	0.00000	Yes	0.00000	50%	OSHA
Tetrachloroethylene	100.0000	0.00037	0.00002	Yes	0.00001	50%	OSHA
Toluene	100.0000	0.00532	0.00022	Yes	0.00021	50%	NIOSH
1,1,1 - Trichloroethane	350.0000	0.00076	0.00004	Yes	0.00038	50%	NIOSH
Xylene	100.0000	0.00230	0.00009	Yes	0.00000	50%	OSHA

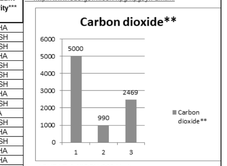

1 = ASHRAE & NIOSH C02 Limit
2 = C02 Level at Ventilation Rate OA Flow Rate
3 = C02 Level at IAQ Procedure OA Flow Rate

**Carbon dioxide has been provided for reference only for gathering demand control ventilation (DCV) setpoints. The National Research Council was commissioned by the US Navy to prove C02 is not a contaminant of concern when using air purification to control the other contaminants of concern, as found on submarines.

Building materials and furnishings assumed to have no VOCs and off-gassing is complete
All yellow shaded boxes require user input or review

Is IAQ acceptable at reduced outside air levels? Yes

GLOBAL PLASMA SOLUTIONS INDOOR AIR QUALITY SOFTWARE©
COPYRIGHT 2008 GLOBAL PLASMA SOLUTIONS, LLC - ALL RIGHTS RESERVED
UNAUTHORIZED USE OR COPYING STRICTLY PROHIBITED

Global Plasma Solutions

10 Mall Terrace, Building C
Savannah, GA 31406
Phone: (912) 356-0115 Fax: (912) 356-0114
Email: info@globalplasmasolutions.com Web: www.globalplasmasolutions.com
VERSION 1.5 running ASHRAE 62.1-2013

Zone Tag	Facility Type	Zone Use	Zone Floor Area (square ft) Az	Zone Max Occupancy Pz	Table 6.1 OA per Occupant Rp	Table 6.1 cfm/ft2 Ra	Pz * Rp / Pz * Rp	Az * Ra / Az * Ra	Table 6.2 Ventilation Effectiveness Ez	Outdoor Air to Zone (CFM) with Ez correction (Vbz/Ez)
104 - Office	General	Office Space	150.0	1.0	5.0	0.06	5	9	0.8	18
										OA required per VRP

Zone Height (feet)	9
Desired Outside Air (Vo) IAQP	5
Supply Air (Vs)	140
Return Air (Vr)	140
Recirc. Flow Factor (R)	0.80
Ventilation Effectiveness (Ez)	0.8
Level of Physical Activity	**Sedentary**
Filter Location	B
HVAC Flow Type	Constant
Outdoor Air Flow Type	Constant

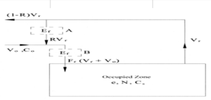

Air Changes Per Hour	6.2	VRP OA CFM per person	17.5
Outside Air Per VRP	18 CFM	IAQ OA CFM per person	5.0
Outside Air Per IAQ	5 CFM		
Outside Air Savings	13 CFM	Winter Heating Savings	
OA Summer Drybulb	95.0	OA Winter Design DB (F)	18
OA Summer Wetbulb	78.0	Supply Air DB Setpoint (F)	70
Coil Leaving Air Drybulb (F)	58.0	MBH Saved Winter	0.7
Coil Leaving Air Wetbulb (F)	57.7	KW Saved Winter	0.2
OA MBH Saved Summer*	#NAME?		
OA Tons Saved Summer*	#NAME?		

*OA = Outside Air
***OSHA, NIOSH & WHO most conservative values used
http://www.cdc.gov/niosh/npg/npgsyn-a.html

Indoor Contaminants Generated By People & From Outdoors	Maximum Threshold Value (PPM)	Steady State Using the VRP* (Prescribed OA) Plasma Off	Steady State Using the IAQ Method (Reduced OA) Plasma On	Is Steady State Level Acceptable at Reduced OA Levels?	Contaminant Generation Rate (PPM)	Filtration Effectiveness	Cognizant Authority***
Acetaldehyde	100.0	0.01111	0.00046	Yes	0.00032	50%	OSHA
Acetone	250.0	0.00157	0.00014	Yes	0.00433	50%	NIOSH
Ammonia	25.00	0.01188	0.00298	Yes	0.14210	50%	NIOSH
Benzene	1.0000	0.00251	0.00011	Yes	0.00015	50%	OSHA
2- Butanone (MEK)	200.0	0.00016	0.00002	Yes	0.00088	50%	NIOSH
Carbon dioxide**	5000	990	2469	Yes	292	0%	NIOSH
Chloroform	2.0000	0.00011	0.00000	Yes	0.00003	50%	NIOSH
Dioxane	100.0	0.00000	0.00000	Yes	0.00000	50%	OSHA
Hydrogen Sulfide	10.0	0.00000	0.00000	Yes	0.00000	50%	NIOSH
Methane	NA	1.68094	1.68094	Yes	0.00000	0%	NA
Methanol	200.0	0.00000	0.00000	Yes	0.00000	0%	NIOSH
Methylene Chloride	25.0	0.00075	0.00004	Yes	0.00080	50%	OSHA
Propane	1000.0	0.00998	0.00998	Yes	0.00000	0%	NIOSH
Tetrachloroethane	5.0000	0.00000	0.00000	Yes	0.00000	50%	OSHA
Tetrachloroethylene	100.0000	0.00037	0.00002	Yes	0.00001	50%	OSHA
Toluene	100.0000	0.00532	0.00022	Yes	0.00021	50%	NIOSH
1,1,1 - Trichloroethane	350.0000	0.00076	0.00004	Yes	0.00038	50%	NIOSH
Xylene	100.0000	0.00230	0.00009	Yes	0.00000	50%	OSHA

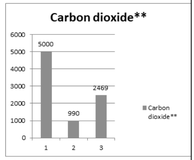

1 = ASHRAE & NIOSH C02 Limit
2 = C02 Level at Ventilation Rate OA Flow Rate
3 = C02 Level at IAQ Procedure OA Flow Rate

**Carbon dioxide has been provided for reference only for gathering demand control ventilation (DCV) setpoints. The National Research Council was commissioned by the US Navy to prove C02 is not a contaminant of concern when using air purification to control the other contaminants of concern, as found on submarines.

Building materials and furnishings assumed to have no VOCs and off-gassing is complete
All yellow shaded boxes require user input or review

Is IAQ acceptable at reduced outside air levels? Yes

GLOBAL PLASMA SOLUTIONS INDOOR AIR QUALITY SOFTWARE©
COPYRIGHT 2008 GLOBAL PLASMA SOLUTIONS, LLC - ALL RIGHTS RESERVED
UNAUTHORIZED USE OR COPYING STRICTLY PROHIBITED

MECHANICAL
OSA
CALCULATIONS

DRAWN	RBG
CHECKED	JWS
SCALE	AS NOTED
DATE	NOVEMBER 15, 2021
FILE	
JOB NO.	21-01
REVISIONS	

SHEET
M0.7
OF
XX
SHEETS

KEYED NOTES

1. 6"ø UP TO ATTIC SPACE.
2. 8"ø UP TO ATTIC SPACE.
3. 6"ø UP TO ATTIC SPACE WITH AUTO DAMPER IN THE VERTICAL DIRECTION.
4. SUSPEND UNIT FROM STRUCTURE ABOVE WITH SPRING VIBRATION ISOLATORS, PROVIDE SHEETMETAL DRAIN PAN, MINIMUM 18 GAUGE, 3" LARGER ON ALL SIDES WITH ALL SEAMS SEALED WATER TIGHT.
5. ROUTE CONDENSATE DRAIN LINE AND REFRIGERANT LINES AS HIGH AS POSSIBLE.
6. VENT PIPE TO BE CATEGORY III VENT PIPE. ROUTE PER MANUFACTURER'S INSTRUCTIONS. VENT PIPE THAT PASSES THRU COMBUSTIBLE ROOFING MATERIALS MUST BE INSULATED OR USE APPROVED INSULATION THIMBLE.
7. SUSPEND DEHUMIDIFIER FROM STRUCTURE ABOVE USING SPRING VIBRATION ISOLATORS. PROVIDE AUXILIARY DRAIN PAN. 20 GA GALVANIZED STEEL, SEALED WATERTIGHT, 3" LARGER THAT UNIT ON ALL SIDES. PROVIDE 1"ø DRAIN WITH TRAP AND ROUTE AS SHOWN.
8. PROVIDE RESIDENTIAL STYLE UNDER COUNTER HOOD. 30" WIDE, BUILT-IN FAN, 190 CFM EXHAUST, INCANDESCENT LAMP, BACKDRAFT DAMPER, 7" ROUND DUCT CONNECTION, FLUSH MOUNTED CONTROLS, FULLY ENCLOSED FILTERS, UL LISTED. BROAN RM42000 OR APPROVED EQUAL. COLOR TO BE SELECTED BY ARCHITECT. CONNECT 8"ø TO HOOD AND ROUTE 8"ø TO EXHAUST HOOD ON ROOF. COOK PR-8 OR EQUAL.
9. CARBON MONOXIDE SENSORS TO ALARM AT OCCUPIED STATION. TO BE PROVIDED BY ELECTRICAL AND INSTALLED BY MECHANICAL. COORDINATE WITH ELECTRICAL. WIRING FROM SENSOR TO ALARM TO BE PROVIDED BY ELECTRICAL.
10. 3"ø COMBINATION FLUE/INTAKE UP TO ATTIC FLOOR PLAN. SEE ATTIC FLOOR PLAN FOR CONTINUATION OF DUCTS.
11. 12x12 INTAKE LOUVER WITH AUTO DAMPER. INTERLOCK TO OPEN WITH RESPECTIVE VF ON. CLOSE WHEN VF OFF.
12. 16x16 INTAKE LOUVER WITH AUTO DAMPER MOUNTED 12" BELOW CEILING. AUTO DAMPER IN LAUNDRY ROOM SHALL BE INTERLOCKED WITH RESPECTIVE VF AND DRYER TO OPEN WHEN EITHER ARE ON. DAMPER TO CLOSE WHEN BOTH VF AND DRYER ARE OFF. COORDINATE WITH DRYER MANUFACTURER.
13. SEE STORM SHELTER GENERAL NOTES (THIS SHEET) FOR MANUAL AND AUTO DAMPER LOCATIONS AND OPERATION. AUTO DAMPER IN HIGH LOUVER SHALL BE INTERLOCKED TO OPEN WITH WALL SWITCH AND/OR RESPECTIVE VF-2.

GENERAL NOTES

1. VEHICLE EXHAUST TO BE PROVIDED BY OWNER AND INTERNAL TO EACH VEHICLE IN 129 - APPARATUS ROOM.

STORM SHELTER GENERAL NOTES

1. ALL PIPING AND DUCTWORK LOCATED WITHIN THE STORM SHELTER SHALL BE SUPPORTED WITH TRAPEZE HANGERS CONSISTING OF UNISTRUT WITH ALL-THREAD ROD. ALL THREAD SHALL BE ATTACHED TO THE JOISTS/BEAMS IN THE SHELTER.
2. COORDINATE ALL PENETRATIONS OF SHELTER WALLS OR ROOF WITH GENERAL CONTRACTOR. DO NOT PENETRATE OR CUT BOND BEAMS.
3. WEATHER LOUVERS SHALL BE INSTALLED IN BRICK, IN FRONT OF STORM SHELTER LOUVERS. WEATHER LOUVERS SHALL HAVE DRAINABLE BLADE. WEATHER LOUVERS SHALL BE RUSKIN ELF375 OR APPROVED EQUAL.
4. STORM SHELTER LOUVERS SHALL BE INSTALLED IN THE STORM SHELTER WALL PER MANUFACTURER'S INSTRUCTIONS. STORM SHELTER LOUVERS SHALL BE RUSKIN XP500, GREENHECK MODEL FSG, OR APPROVED EQUAL. HIGH IMPACT LOUVERS SHALL MEET THE IMPACT TESTING CRITERIA FOR STORM SHELTERS PER ICC 500 / FEMA 361.
5. INSTALL 1/2" MESH, 18 GA. GALVANIZED SCREEN BETWEEN STORM SHELTER LOUVER AND MANUAL DAMPER.
6. INSTALL MANUAL DAMPER ON LOWER SHELTER LOUVER. MANUAL DAMPER SHALL BE RUSKIN CD50 OR APPROVED EQUAL. INSTALL MANUAL DAMPER ON EACH ACTIVE LOUVER SECTION WITH DAMPER QUADRANT IN MIDDLE OF DAMPER. DAMPERS SHALL BE LINKED TOGETHER WITH THREADED ROD AND LINKAGE SO THAT BOTH DAMPERS ARE OPENED AT THE SAME TIME BY ONE QUADRANT. PROVIDE BRACKET THAT ALLOWS QUADRANT TO BE LOCKED CLOSED. "LOCK" SHALL BE A SNAPPER PIN THAT IS EASILY REMOVED BY THE OCCUPANTS.
7. INSTALL AUTO DAMPER ON HIGH SHELTER LOUVER. DAMPER SHALL BE NORMAL OPEN (POWERED CLOSE). INTERLOCK WITH WALL SWITCH TO OPEN DURING A STORM EVENT. IN THE EVENT THAT POWER IS LOST, AUTO DAMPER SHALL FAIL OPEN. AUTO DAMPER IN HIGH LOUVER SHALL BE INTERLOCKED TO OPEN WITH WALL SWITCH AND/OR RESPECTIVE VF-2.
8. PROVIDE SIGN AT SHELTER VENTILATION DOOR THAT STATES: "MANUAL DAMPER IN LOW LOUVER SHALL BE OPENED AND ACTIVATE WALL VENTILATION SWITCH FOR HIGH LOUVER TO OPEN DURING AN EMERGENCY."

STORM SHELTER CALCULATIONS:

1. STORM SHELTER SHALL HAVE 20 OCCUPANTS.
2. 6 SQ. IN. REQUIRED PER OCCUPANT. 20 x 6 = 120 SQ. IN.
3. LOUVER OPENING PROVIDED:

   18 x 12 = 216 IN^2 TOTAL PER LOUVER

   FREE AREA = 63.36 IN^2 PER LOUVER

   TOTAL FREE AREA = 63.36 IN^2 x 2 = 126.72 IN^2

Dewberry | EDMONDS
2 Riverchase Office Plaza
Suite 205
Hoover, AL 35244
(205) 988-2069
www.dewberry.com
Project Number : 50145027

ALABAMA LICENSED No. 24747 PROFESSIONAL ENGINEER WADE STEWART 11-15-2021

THOMAS M. McELRATH, ARCHITECT
ARCHITECTURE and SPACE PLANNING
717 MERIT SPRINGS ROAD
GADSDEN, ALABAMA 35901
PHONE: (256) 490-8244
EMAIL: TOM@TMM-ARCHITECT.COM

A NEW FIRE STATION NO. 1
located at
3170 Highway 77
for the
City of Southside, Alabama

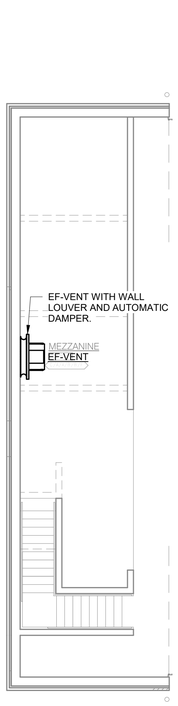

MECHAMICAL - MEZZANINE PLAN

SCALE: 1/8" = 1'-0"

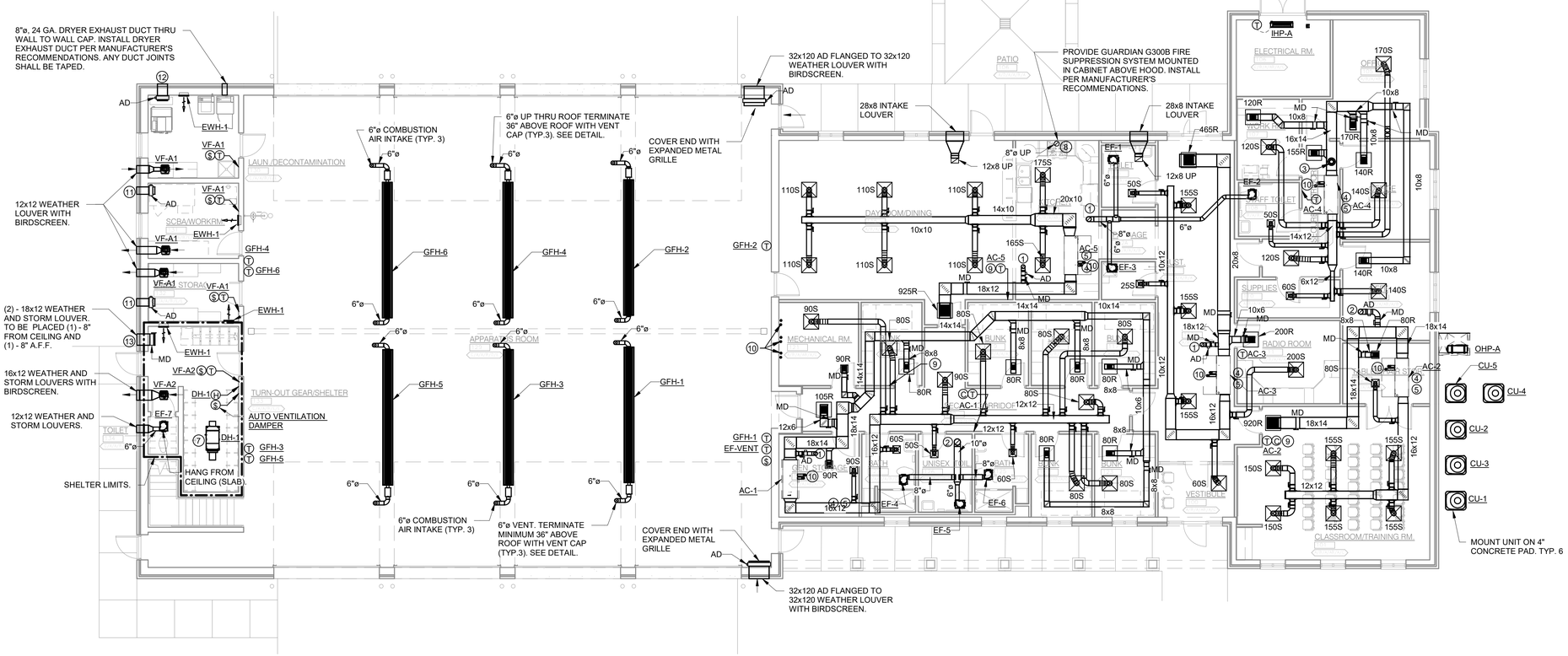

MECHANICAL - FLOOR PLAN

SCALE: 1/8" = 1'-0"

PLAN NORTH

MECHANICAL FLOOR PLAN

DRAWN	RBG
CHECKED	JWS
SCALE	AS NOTED
DATE	NOVEMBER 15, 2021
FILE	
JOB NO.	21-01
REVISIONS	

SHEET M1.0 OF XX SHEETS

Dewberry | EDMONDS
2 Riverchase Office Plaza
Suite 205
Hoover, AL 35244
(205) 988-2069
www.dewberry.com
Project Number :
50145027

ALABAMA LICENSED
No. 24747
PROFESSIONAL
11-15-2021
ENGINEER
WADE STEWART

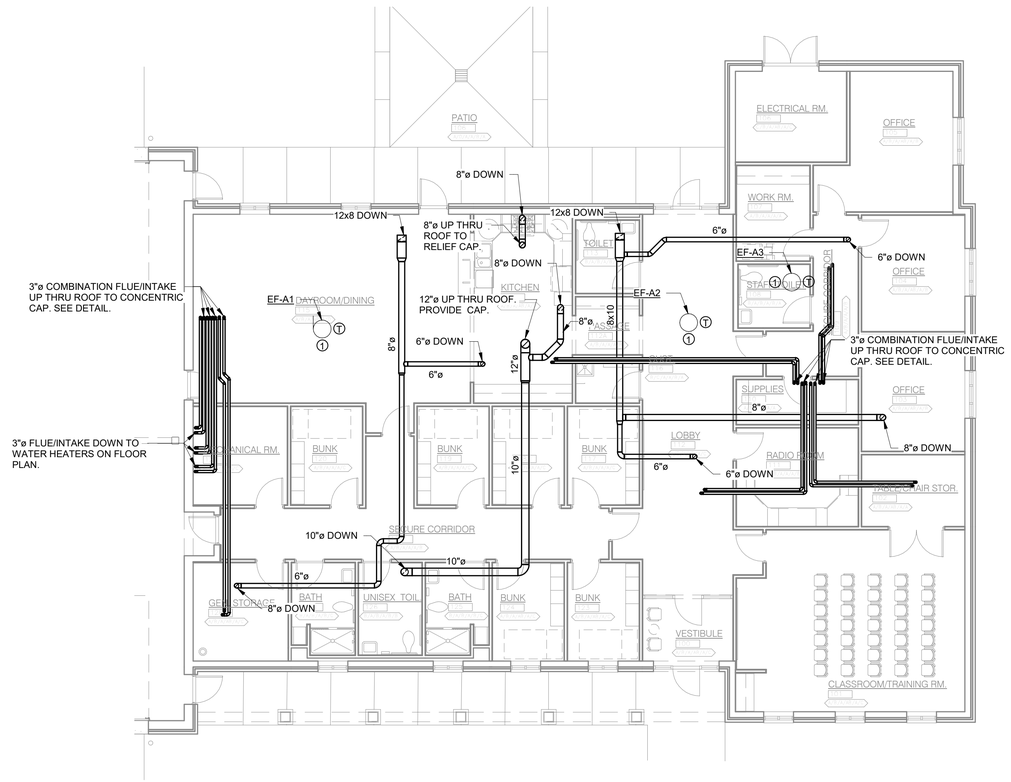

KEYED NOTES
1 ATTIC VENTILATION FAN ON ROOF. OPEN TO ATTIC AND UP THRU ROOF.

MECHAMICAL - ATTIC SPACE

SCALE: 1/8" = 1'-0"

THOMAS M. McELRATH, ARCHITECT
ARCHITECTURE and SPACE PLANNING
717 MERIT SPRINGS ROAD
GADSDEN, ALABAMA 35901
PHONE: (256) 490-8244
EMAIL: TOM@TMM-ARCHITECT.COM

A NEW FIRE STATION NO. 1
located at
3170 Highway 77
for the
City of Southside, Alabama

MECHANICAL ATTIC PLAN

DRAWN	RBG
CHECKED	JWS
SCALE	AS NOTED
DATE	NOVEMBER 15, 2021
FILE	
JOB NO.	21-01
REVISIONS	

SHEET
M1.1
OF
XX
SHEETS

Dewberry | EDMONDS
2 Riverchase Office Plaza
Suite 205
Hoover, AL 35244
(205) 988-2069
www.dewberry.com

Project Number :
50145027

ALABAMA LICENSED
No. 24747
PROFESSIONAL
11-15-2021
ENGINEER
WADE STEWART

THOMAS M. McELRATH, ARCHITECT
ARCHITECTURE and SPACE PLANNING
717 MERIT SPRINGS ROAD
GADSDEN, ALABAMA 35901
PHONE: (256) 490-8244
EMAIL: TOM@TMM-ARCHITECT.COM

A NEW FIRE STATION NO. 1
located at
3170 Highway 77
for the
City of Southside, Alabama

GENERAL NOTES
1. REFRIGERANT LINES TO BE ROUTED AS HIGH AS POSSIBLE. SIZE LINES AS DIRECTED BY THE MANUFACTURE'S.
2. ROUTE CONDENSATE DRAIN LINES AS HIGH AS POSSIBLE. SIZE LINES AS DIRECTED BY THE MANUFACTURER'S.
3. ALL INDIVIDUAL UNIT CONDENSATE DRAIN LINES TO TIE INTO TOP OF RESPECTIVE DRAIN HEADERS.

KEYED NOTES
1 REFRIGERANT LINES UP IN WALL TO CEILING SPACE AND TO RESPECTIVE INDOOR UNIT.
2 4" CONCRETE PAD. - SEE DETAIL

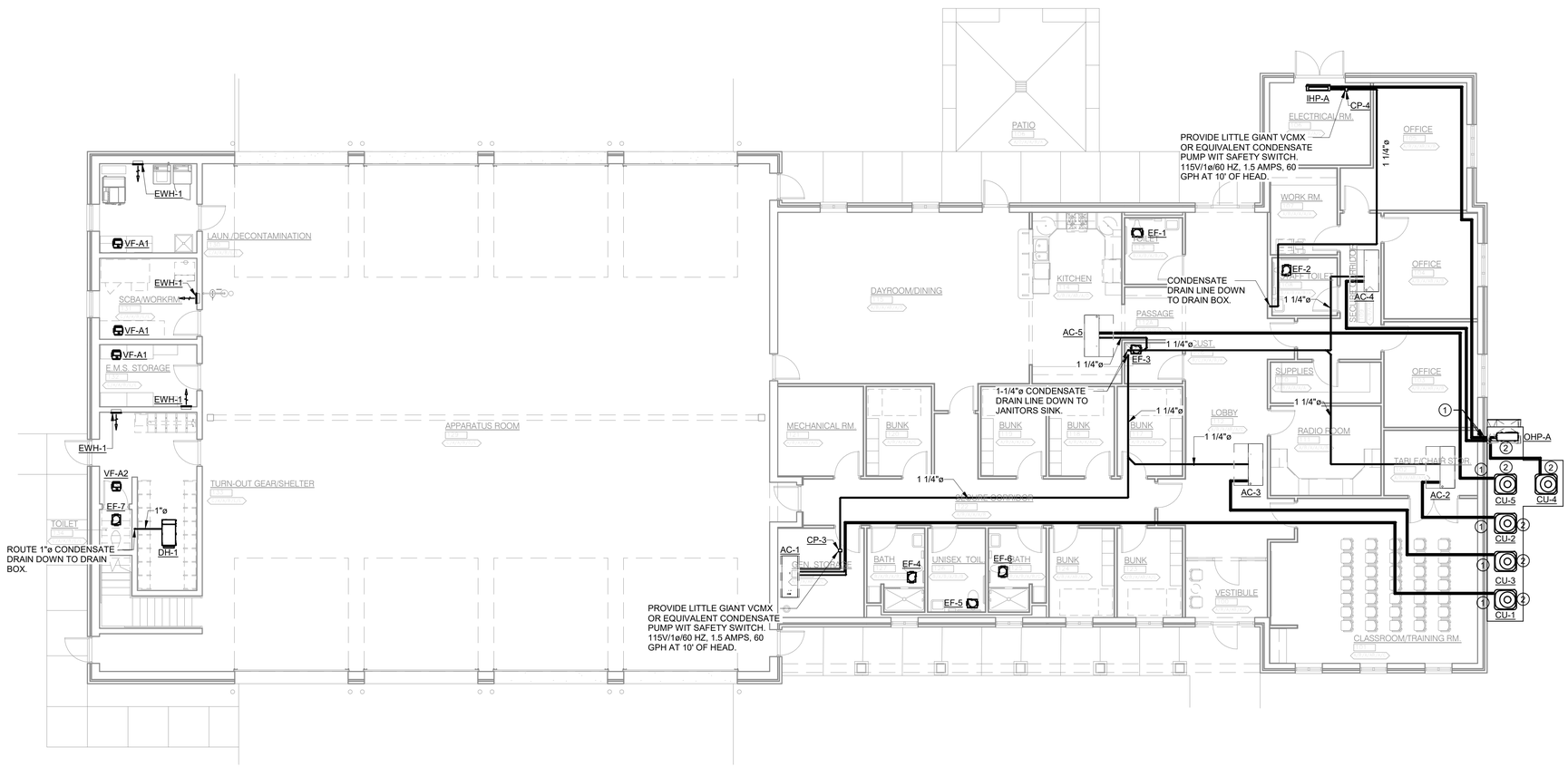

MECHANICAL PIPING - FLOOR PLAN

SCALE: 1/8" = 1'-0"

PLAN NORTH

MECHANICAL PIPING FLOOR PLAN

DRAWN	RBG
CHECKED	JWS
SCALE	AS NOTED
DATE	NOVEMBER 15, 2021
FILE	
JOB NO.	21-01
REVISIONS	

SHEET M2.0 OF XX SHEETS

ELECTRICAL LEGEND

LIGHTING

- (#) SURFACE OR RECESSED CEILING OUTLET – FIXTURE TYPE '#'
- CEILING OUTLET – FIXTURE SINGLE OR CONTINUOUS LENGTHS
- CEILING OUTLET – FIXTURE SINGLE OR CONTINUOUS LENGTHS CONNECTED TO EMERGENCY INVERTER OR INTEGRAL BATTERY.
- CEILING OUTLET – FIXTURE SINGLE OR CONTINUOUS LENGTHS
- CEILING OUTLET – FIXTURE SINGLE OR CONTINUOUS LENGTHS CONNECTED TO EMERGENCY INVERTER OR INTEGRAL BATTERY.
- SINGLE SIDE EXIT SIGN – WITH DIRECTIONAL CHEVRONS AS SHOWN. BATTERY BACK UP

LIGHTING CONTROL SYSTEM

- OSS WALL MOUNTED VACANCY SINGLE POLE SWITCH, ON/OFF, RAISE LOWER, 0–10V DIMMING, 8A MAX INPUT LED, 120/277V; LUTRON MODEL NO. MS–Z101–V–XX OR APPROVED EQUAL
- $ 1–POLE, 20A, 125/277V, SEE SPECIFICATIONS.
- 3$ 3–WAY, 20A, 125/277V, SEE SPECIFICATIONS

POWER

- POWER PANEL – SEE SCHEDULE AND SPECIFICATIONS
- HP MOTOR–HORSEPOWER AS SHOWN (HP) HORSEPOWER (TYPICAL)
- F FAN – CEILING/ROOF MOUNTED EXHAUST FAN
- FUSED DISCONNECT SWITCH – 600V – HEAVY DUTY TYPE, RATING AND ENCLOSURE AS SHOWN. SEE SPECIFICATIONS FOR IDENTIFICATION. FURNISH AND INSTALL NAME PLATES PER DETAIL. FUSE PER EQUIPMENT MANUFACTURER.
- $M MANUAL MOTOR STARTER – HORSEPOWER RATED, WITH THERMAL OVERLOAD UNITS AND ENCLOSURE CONSISTENT WITH ENVIRONMENT.

BRANCH CIRCUITS

- BRANCH CIRCUIT – ROUTED ABOVE CEILING OR IN WALL (SEE SPECIFICATIONS)
- BRANCH CIRCUIT – ROUTED IN FLOOR (SEE SPECIFICATIONS)
- HOMERUN TO PANELBOARD – NUMBER OF CIRCUITS CONDUCTORS AS REQUIRED, CONDUIT SIZE AS REQUIRED (3/4"C MINIMUM). INDIVIDUAL NEUTRAL CONDUCTOR REQUIRED PER CIRCUIT. FURNISH AND INSTALL PER NEC REQUIREMENTS.
- BRANCH CIRCUIT – EXPOSED (SEE SPECIFICATIONS).
- EQUIPMENT HOMERUN – NUMBER OF CIRCUITS/ CONDUCTORS AS REQUIRED, CONDUIT SIZE AS REQUIRED (3/4"C MINIMUM. FURNISH AND INSTALL PER NEC REQUIREMENTS.
- FEEDER – OVERHEAD
- FEEDER – UNDERGROUND

RECEPTACLES

- WALL OUTLET – DUPLEX OUTLET WITH GROUND FAULT INTERRUPTER, 20A, 125V, 3 WIRE ONE POLE GROUND, SEE SPECIFICATIONS.
- WP GFI WALL OUTLET – WEATHERPROOF DUPLEX OUTLET WITH GROUND FAULT INTERRUPTER, 20A, 125V, 3 WIRE ONE POLE GROUND
- WALL OUTLET – DOUBLE DUPLEX OUTLET, 20A, 125V, 3 WIRE ONE POLE GROUND
- WALL OUTLET – DUPLEX OUTLET, 20A, 125V, 3 WIRE ONE POLE GROUND, SEE SPECIFICATIONS.
- WALL OUTLET – SINGLE OUTLET, 20A, 125V, 3 WIRE POLARIZED
- J WALL OUTLET – JUNCTION BOX
- CEILING OUTLET – JUNCTION BOX
- RISER – UP
- RISER – DOWN
- HD DYSON HAND DRYER, MODEL AIRBLADE V (NICKEL), 120 VAC, MOUNTED ON 4" SQUARE BOX WITH SINGLE GANG RAISED COVER VERIFY EXACT HEIGHT WITH ARCHITECT ELEVATIONS AND ADA STANDARDS.
- A FLOOR OUTLET – (FLOOR BOX) WIREMOLD (RFB6E–OG) SERIES SIX COMPARTMENT RECESSED ACTIVATION FLOOR BOX FOR POWER,DATA, (8CTC) ROUND SURFACE STYLE COVER ASSEMBLY. ACTIVATION COVER FINISH AS SELECTED BY ARCHITECT). ROUTE 1" CONDUIT (FOR AUXILIARY CABLING) TO NEAREST WALL, RISE TO ABOVE CEILING AND TERMINATE WITH SMOOTH BUSHING. FURNISH AND INSTALL J–HOOKS (3FT. ON CENTER) TO NEAREST CABLE TRAY/SLEEVE/AUXILIARY BACKBOARD. FURNISH AND INSTALL ADDITIONAL CONDUITS PER FLOOR BOX DETAILS. BOX SHALL BE FURNISHED COMPLETE WITH:
  - 3 EACH 20A DUPLEX RECEPTACLES MOUNTED IN (RFB6DP) DUPLEX RECEPTACLE BRACKETS.

FIRE ALARM

- FACP FIRE ALARM CONTROL PANEL – EDWARDS MODEL VS2 SERIES INTELLIGENT ADDRESSABLE ANALOG FIRE DETECTION CONTROL PANEL WITH STAND–BY BATTERY SURFACE MOUNTED AT 5'–0" TO CENTERLINE
  - * FURNISH AND INSTALL INTEGRAL VOICE EVACUATION
  - ** PROVIDE FACTORY INSTALLED BATTERY BACKUP AND FACTORY INSTALLED SURGE SUPPRESSION DEVICE IN FACP.
  - *** CONTRACTOR SHALL PROVIDE COMPLETE, INDEPENDENT 2EA. CAT5E TELEPHONE LINE FROM AUXILIARY BACKBOARD/ MDF: BB1 TO FIRE ALARM CONTROL PANEL. CAT5E SHALL BE ROUTED IN 3/4" EMT CONDUIT FROM POINT "A" TO POINT "B" AND TERMINATED AS REQUIRED BY FIRE ALARM TECHNICIAN.
  - **** FURNISH AND INSTALL INTEGRAL WEB SERVER ACCESS CARD.
  - ***** FURNISH AND INSTALL POINT ID CELLULAR DIALER FOR PRIMARY AND BACK–UP AT FACP.
- FA REMOTE FIRE ALARM ANNUNCIATOR PANEL – EDWARDS MODEL K–RLCD–C IN FLUSH MOUNTED SERIES BOX. PROVIDE REMOTE MICROPHONE ADJACENT TO ANNUNCIATOR IN SAME FLUSH MOUNTED BOX.
- F MANUAL PULL STATION – EDWARDS MODEL E85001–0279 W/ FLUSH MOUNTED BACKBOX (4" SQUARE BOX WITH SINGLE GANG RAISED COVER) MOUNTED @ + 44" A.F.F. TO BOTTOM.
- F FIRE ALARM STROBE – EDWARDS MODEL GCF–VM – CEILING MOUNTED ON FLUSH 4" SQUARE BOX WITH 1–1/2" EXTENSION RING
- WALL F FIRE ALARM STROBE – EDWARDS MODEL GCF–VM – WALL MOUNTED ON FLUSH 4" SQUARE BOX WITH 1–1/2" EXTENSION RING AT +82" A.F.F.
- F FIRE ALARM SPEAKER STROBE – EDWARDS MODEL GCF–52VM – CEILING MOUNTED ON FLUSH 4" SQUARE BOX WITH 1–1/2" EXTENSION RING
- WALL F FIRE ALARM SPEAKER STROBE – EDWARDS MODEL GCF–52VM – WALL MOUNTED ON FLUSH 4" SQUARE BOX WITH 1–1/2" EXTENSION RING, AT +82" A.F.F.
- SMOKE DETECTOR – EDWARDS MODEL E85001–0651 – WITH BASE/CEILING MOUNTED ON FLUSH 4" SQUARE BOX
- DD–S DD–R DUCT DETECTOR (S=SUPPLY AIR – R= RETURN AIR) – EDWARDS MODEL E85001–0584 W/ SAMPLING TUBE & RELAY FURNISHED BY FIRE ALARM CONTRACTOR, INSTALLED IN DUCT BY MECHANICAL. FINAL CONNECTIONS BY FIRE ALARM CONTRACTOR.
- HEAT DETECTOR – EDWARDS MODEL E85001–0620 – WITH BASE/CEILING MOUNTED ON FLUSH 4" SQUARE BOX
- F FIRE ALARM CONDUIT & WIRE – SEE FIRE SYSTEM NOTES.
- FS FLOW SWITCH MONITOR MODULE – EDWARDS MODEL GSA–CT1. FLOW SWITCH FURNISHED AND INSTALLED BY OTHERS, MODULE FURNISHED AND INSTALLED BY FIRE ALARM CONTRACTOR. CONNECT TO FACP AS A SEPARATE ZONE.
- TS TAMPER SWITCH MONITOR MODULE – EDWARDS MODEL GSA–CT1 TAMPER SWITCH FURNISHED AND INSTALLED BY OTHERS, MODULE FURNISHED AND INSTALLED BY FIRE ALARM CONTRACTOR. CONNECT TO FACP AS REQUIRED.
- RT REMOTE TEST STATION (KEY OPERATED) – KEY BOX TYPE, FLUSH MOUNTED, HEIGHT CONDUIT AND WIRE TO DUCT DETECTOR AS REQUIRED. PROVIDE FINAL CONNECTIONS AS REQUIRED

FIRE ALARM SYSTEM NOTES

1. FIRE ALARM CONTRACTOR TO INCLUDE IN BID PRICE REQUIRED PROGRAMMING SERVICES SUCH THAT THE FINAL ROOM NUMBERS (PER THE APPROVED OWNERS SIGNAGE SCHEME) FOR EACH F.A. SYSTEM DEVICE SUCH THAT ALARMS AND DEVICE LOCATIONS MATCH BUILDING SIGNAGE.
2. FIRE ALARM SUB–CONTRACTOR TO FURNISH POINT TO POINT WIRING DIAGRAM BY THE FIRE ALARM MANUFACTURER WITH FIRE ALARM SYSTEM SUBMITTALS. POINT TO POINT WIRING DIAGRAMS SHALL INCLUDE ALL WIRING INFORMATION AND CONDUIT SIZES. REQUIRED WIRING DIAGRAMS SHALL BE FURNISHED WITH THE ELECTRICAL SUBMITTAL PACKAGE. SUBMITTAL PACKAGES WITHOUT THESE DRAWINGS AND THE REQUIRED MAINTENANCE AND EXPANSION INFORMATION (SEE SPECIFICATIONS) WILL NOT BE ACCEPTED.
3. ELECTRICAL CONTRACTOR SHALL COORDINATE ALL WIRING REQUIREMENTS WITH THE FIRE ALARM SYSTEM SUBCONTRACTOR PRIOR TO BIDDING AND/OR ROUGHING. FURNISH AND INSTALL ALL REQUIRED 120V. CIRCUITS FOR AMPLIFIERS, FIELD CHARGING PANELS, RELAY PANELS, ETC..
4. ALL FIRE ALARM CABLING SHALL BE INSTALLED CONCEALED IN CONDUIT, 3/4" MINIMUM (NO EXCEPTIONS). ALL FIRE ALARM CONDUITS SHALL BE RED TRUE COLOR EMT AS MANUFACTURED BY ALLIED TUBE AND CONDUIT.
5. FIRE ALARM SYSTEM CONTRACTOR SHALL FURNISH AND INSTALL REMOTE TEST STATION(S) FOR ALL DUCT MOUNTED SMOKE DETECTORS. THESE STATIONS SHALL BE LABELED WITH THE DEVICE NUMBER AND THE UNIT NUMBER. THE REMOTE TEST STATION(S) SHALL BE LOCATED IN AN ACCESSIBLE LOCATION.
6. THE ELECTRICAL CONTRACTOR SHALL COORDINATE LOCATIONS FOR ALL FIRE PROTECTION SYSTEM VALVES WITH THE FINAL FIRE PROTECTION SYSTEM PLANS PRIOR TO BIDDING AND/OR ROUGHING. AT EACH CONTROL VALVE, THE CONTRACTOR SHALL PROVIDE FIRE ALARM SYSTEM CONNECTIONS TO THE FLOW AND TAMPER SWITCHES (FURNISHED AND INSTALLED BY OTHERS).
7. DUCT MOUNTED SMOKE DETECTORS FURNISHED BY THE ELECTRICAL CONTRACTOR. AND INSTALLED BY THE MECHANICAL CONTRACTOR LOCATIONS SHOWN ARE FOR REFERENCE ONLY. COORDINATE EXACT LOCATION WITH THE MECHANICAL PLANS AND FINAL CONNECTIONS BY FIRE ALARM CONTRACTOR. PROVIDE ALL EQUIPMENT REQUIRED FOR SHUTDOWN OF THE UNITS BY THE FIRE ALARM CONTROL PANEL AS REQUIRED.
8. CONTRACTOR SHALL PROVIDE WITH THE FIRE ALARM SUBMITTAL PACKAGE THE FOLLOWING INFORMATION PER IBC 2015:
   - COPY OF STATE OF ALABAMA FIRE ALARM CONTRACTOR LICENSE/PERMIT
   - LOCATION OF ALARM INITIATING DEVICES
   - CONDUCTOR TYPES AND SIZES AND TERMINATING EQUIPMENT
   - MODEL NUMBERS AND LISTING INFORMATION FOR EQUIPMENT DEVICES AND MATERIALS
9. THE NEW FIRE ALARM SYSTEMS WILL COMPLY WITH THE REQUIREMENTS OF THE FOLLOWING CODES:
   - INTERNATIONAL BUILDING CODE 2015
   - INTERNATIONAL FIRE CODE 2015
   - ALL REQUIREMENTS OF THE AUTHORITY HAVING JURISDICTION
10. THE CERTIFIED FIRE ALARM ACT REQUIRES THAT EVERY BUSINESS WHO INSTALLS FIRE ALARM SYSTEMS IN COMMERCIAL OCCUPANCIES MUST BE LICENSED AS A CERTIFIED FIRE ALARM CONTRACTOR. THE CONTRACTOR MUST HAVE A NICET LEVEL III TECHNICIAN IN A POSITION OF RESPONSIBILITY, AND THE LICENSE WILL BE ISSUED IN THE NAME OF THE CERTIFICATE HOLDER AND THE CONTRACTOR. THE CERTIFIED FIRE ALARM ACT ALSO REQUIRES THAT TECHNICIANS WORKING FOR THE CERTIFIED CONTRACTOR MUST HOLD A CURRENT NICET LEVEL II, OR EQUIVALENT, CERTIFICATION. CONTRACTORS TO SHOW EVIDENCE WITH SUBMITTAL PACKAGE THAT HE/SHE MEETS THE CERTIFICATION REQUIREMENTS OF THE ACT AND HOLDS A PERMIT ISSUED BY THE STATE FIRE MARSHALL.
11. THE FIRE DETECTION AND ALARM SYSTEM CONTROLS CONTRACTOR SHALL HOLD A PERMIT FROM THE ALABAMA STATE FIRE MARSHAL. THE FIRE ALARM SYSTEM CONTRACTOR SHALL PROVIDE A COPY OF THE STATE FIRE MARSHAL'S PERMIT TO THE GENERAL CONTRACTOR SO THAT THE ENGINEER MAY REVIEW THE CONTRACTOR'S QUALIFICATIONS PRIOR TO ANY WORK TAKING PLACE. SEE SPECIFICATIONS SECTION 266520A, APPENDIX FOR COPY OF STATE REQUIREMENTS FOR FIRE ALARM CONTRACTORS DESIRING TO BID THIS PROJECT.

ELECTRICAL NOTES

1. THESE DRAWINGS ARE A PART OF A COMPLETE SET OF ARCHITECTURAL/ENGINEERING CONTRACT DOCUMENTS. ELECTRICAL CONTRACTOR SHOULD REFER TO THE ARCHITECTURAL PLANS FOR WALL DEFINITIONS, ELEVATIONS, CASEWORK, REFLECTED CEILING PLAN, ETC.
2. ALL CIRCUIT BREAKERS AND SWITCHES ARE 3–POLE UNLESS OTHERWISE NOTED.
3. ALL BRANCH CIRCUIT CONDUIT SHALL BE GALVANIZED EMT, JOINED AND TERMINATED WITH SET SCREW STEEL FITTINGS, 3/4" CONDUIT MINIMUM. ALL CIRCUITS SHOWN CONCEALED SHALL BE RUN IN FURRED CEILING SPACES AND SHALL BE CONCEALED IN CONCRETE SLAB ONLY WHEN NO FURRED CEILING SPACE IS PROVIDED.
4. ALL CONDUITS CROSSING EXPANSION JOINTS SHALL HAVE EXPANSION TYPE FITTINGS. ALL OUTLET BOXES MOUNTED BACK–TO–BACK IN WALLS SHALL HAVE FIREPROOF SOUND INSULATING MATERIAL INSTALLED BETWEEN THE BOXES TO PREVENT SOUND TRANSMISSION FROM ONE ROOM TO THE OTHER.
5. ALL FLUSH MOUNTED PANELS SHALL HAVE 5–1" EMPTY CONDUITS STUBBED OUT TO ABOVE CEILING FOR FUTURE CIRCUITS.
6. VERIFY LOCATION OF ALL FLOOR OUTLETS BEFORE INSTALLATION.
7. ALL WALL OUTLETS NOT PROVIDED WITH A DEVICE BY THIS CONTRACTOR SHALL BE PROVIDED WITH BLANK WALL PLATES.
8. ALL BRANCH CIRCUITS SHALL INCLUDE A GREEN COVERED GROUND WIRE SIZED PER NEC OR AS SHOWN. CONNECT TO EACH DEVICE AND OUTLET BOX ON THE CIRCUIT AND TO THE PANELBOARD GROUND BUS. MULTIPLE WIRE BRANCH CIRCUITS WITH COMMON NEUTRAL REQUIRE ONLY ONE GROUND WIRE. NUMBER OF WIRES SHOWN ON DRAWINGS DOES NOT INCLUDE GROUND WIRE. SEE TYPICAL DETAILS FOR MOUNTING HEIGHTS OF ALL OUTLETS.
9. ALL CONDUIT TO BE CONCEALED UNLESS OTHERWISE NOTED (U.O.N).
10. WHERE FIXTURES/DEVICES SHOWN ON COLUMNS, PILASTERS, ABOVE DOORS, ETC. IT IS INTENDED TO BE CENTERED U.O.N. COORDINATE WITH ARCHITECT PRIOR TO INSTALLATION.
11. ALL RACEWAYS AND CABLING SHALL BE CONCEALED IN WALLS OR ABOVE CEILING WHERE POSSIBLE. WHERE COMPLETED FINISHES ARE DISTURBED, CONTRACTOR SHALL REPAIR/ REPLACE SURFACES TO MATCH ORIGINAL AT NO ADDITIONAL EXPENSE TO OWNER. ANY/ ALL EXPOSED RACEWAY/ CONDUIT (WHERE ALLOWED IN CEILING AREAS WITH EXPOSED STRUCTURE) SHALL BE PAINTED TO MATCH ADJACENT SURFACE.
12. ALL ROOF PENETRATIONS SHALL BE KEPT TO AN ABSOLUTE MINIMUM. ELECTRICAL CONTRACTOR SHALL COORDINATE WITH THE ROOFING MANUFACTURER CONTRACTOR FOR ALL ROOF PENETRATIONS. NO ROOF PENETRATIONS SHALL BE PERMITTED THAT WOULD VOID THE ROOF WARRANTY. ELECTRICAL CONTRACTOR SHALL BE RESPONSIBLE FOR ANY/ ALL CHARGES RELATED TO COORDINATION FOR PENETRATIONS.
13. CONTRACTOR SHALL FURNISH AND INSTALL ALL BRACKETS, HARDWARE AND ENVIRONMENTALLY APPROPRIATE ENCLOSURES AS REQUIRED FOR ALL EQUIPMENT.
14. CONTRACTOR SHALL REVIEW AND MAINTAIN ALL FIRE RATINGS.

LIGHTING CONTROL SYSTEMS LEGEND

- LGP SURFACE MOUNTED LIGHTING CONTROL PANEL. 16 RELAY, SINGLE/DOUBLE POLE CAPACITY, NEMA 1 ENCLOSURE, DIGITAL ASTRONOMICAL TIME CLOCK WITH MODEM AND DEDICATED PHOTOCELL, DUAL VOLTAGE TRANSFORMER WITH 2 VOLTAGE BARRIERS, REFER TO PLANS AND LIGHTING CONTROL RISER FOR NUMBER AND TYPE OF DIMMING AND NON DIMMING RELAYS. INTELLIGENT LIGHTING CONTROL (ILC) NO. LL–16–S WITH CONDITIONAL INPUT MODULE ILC NO. LSCIM–P–O. WITH 120/277V CONTROL INPUT.

  ** COORDINATE WITH OWNER TIMECLOCK PROGRAMMING FOR ALL EXTERIOR LUMINAIRES.
  ** SEE PLANS, LIGHTING CONTROL PANEL RISER, AND SPECIFICATIONS
- LD#S WALL MOUNTED ON/OFF LOW VOLTAGE OVERRIDE TO LIGHTING CONTROL DIMMING RELAYS, SEE PLANS AND LIGHTING CONTROL RISER FOR NUMBER OF ZONES. (#=ZONES)

  ILC MODEL NO. LSG3–**–#–MZD
  OR APPROVED EQUAL
- LV#S WALL MOUNTED ON/OFF LOW VOLTAGE OVERRIDE TO LIGHTING CONTROL DIMMING RELAYS, SEE PLANS AND LIGHTING CONTROL RISER AND PLANS FOR NUMBER OF ZONES. (#=ZONES)

  ILC MODEL NO. LSG3–**–#
  OR APPROVED EQUAL
- CDS WALL MOUNTED ON/OFF WITH RAISE/LOWER, 0–10V, MANUAL LOW VOLTAGE WALL SWITCH.

  SENSOR WORX MODEL NO. SWX–803
  OR APPROVED EQUAL
- VSS WALL MOUNTED VACANCY SINGLE POLE SWITCH, ON/OFF, RAISE LOWER, 0–10V DIMMING, 8A MAX INPUT LED, 120/277V;

  SENSOR WORX MODEL NO. SWX–123–D–**
  OR APPROVED EQUAL
- DTS WALL MOUNTED DUAL TECHNOLOGY SINGLE POLE SWITCH, 120/277V;

  SENSOR WORX MODEL NO. SWX–121–**
  OR APPROVED EQUAL
- OS CLG CEILING MOUNTED MULTI–TECHNOLOGY OCCUPANCY SENSOR, 360° COVERAGE, LOW VOLTAGE. COORDINATE WITH ARCHITECTURAL DRAWINGS ON CEILING TYPES.

  SENSOR WORX MODEL NO. SWX–221–1
  OR APPROVED EQUAL
- DP POWER PACK, WITH 0–10V DIMMING, MOUNT ABOVE CEILING WHERE APPLICABLE, 120–277V; 8A OF LIGHTING LOAD PER POWER PACK. PROVIDE NUMBER OF POWER PACKS PER MANUFACTURERS RECOMMENDATIONS.

  SENSOR WORX MODEL NO. SWX–900–AX–D2
  OR APPROVED EQUAL
- PP POWER PACK, WITH NO DIMMING, MOUNT ABOVE CEILING WHERE APPLICABLE, 120–277V; 16A OF LIGHTING LOAD PER POWER PACK. PROVIDE NUMBER OF POWER PACKS PER MANUFACTURERS RECOMMENDATIONS.

  SENSOR WORX MODEL NO. SWX–900
  OR APPROVED EQUAL
- DP# REMOTE ISOLATED 0–10V DIMMING CARD WITH (4)ZONE INPUTS, DIGITALLY ADDRESSABLE, WITH CAT–6, COORDINATE ALL REQUIRED CONNECTIONS WITH MANUFACTURER, PRIOR TO ANY/ALL ROUGHING.

  ILC MODEL NO. LSIDM–R
  OR APPROVED EQUAL
- SP# REMOTE OCCUPANCY SENSOR INPUT MODULE CARD WITH (8)INPUTS FOR LOW VOLTAGE OCCUPANCY SENSOR CONNECTIONS, DIGITALLY ADDRESSABLE, WITH CAT–6, 120/277V POWER SUPPLY IN JUNCTION BOX. COORDINATE ALL REQUIRED CONNECTIONS WITH MANUFACTURER, PRIOR TO ANY/ALL ROUGHING.

  ILC MODEL NO. LSOS8I–R (OS INPUT MODULE) PLN–20–24 (120/277V POWER SUPPLY) OR APPROVED EQUAL
- C LOW VOLTAGE CONTROL WIRING BY MANUFACTURER

LIGHTING CONTROL NOTES

1. ALL SENSOR LOCATIONS ARE APPROXIMATE. REFER TO MANUFACTURER'S INSTALLATION INSTRUCTIONS PRIOR TO INSTALLATION.
2. ULTRASONIC CEILING MOUNT SENSORS SHOULD BE LOCATED A MINIMUM OF SIX (6) FEET FROM HVAC SUPPLY/RETURN VENTS.
3. FIELD VERIFY PROPER SENSITIVITY AND TIME DELAY SETTINGS FOR NON–ADAPTIVE PRODUCTS, FOLLOWING THE MANUFACTURER'S RECOMMENDED PLACEMENT, AND FIELD VERIFICATION OF CIRCUITS WITH RESPECT TO POWER PACK PLACEMENT.
4. CONTRACTOR IS RESPONSIBLE FOR FIELD VERIFICATION OF REQUIRED NUMBER OF POWER PACKS:
   - 4.1. A MINIMUM OF ONE POWER PACK IS REQUIRED FOR EACH CONTROLLED CIRCUIT/ZONE (SEE PLANS).
   - 4.2. EACH POWER PACK CAN SUPPLY UP TO 150mA. REFER TO INSTALLATION GUIDE FOR MAXIMUM NUMBER OR SENSORS CONNECTED TO POWER PACK.
   - 4.3. IF MULTIPLE CIRCUITS ARE TO BE CONTROLLED BY A SINGLE SENSOR, AUXILIARY RELAYS MAY BE USED IN CONJUNCTION WITH A POWER PACK.
5. SENSORS MOUNTED OVER DOORWAYS SHOULD BE PLACED ONE (1) FOOT INSIDE THRESHOLD.
6. THE LIGHTING CONTROL SYSTEM IS DESIGNED AROUND LUTRON LIGHTING CONTROLS AND ALL PRE–APPROVED EQUAL MANUFACTURERS SHALL PROVIDE SITE SPECIFIC INSTALLATION DRAWINGS, CUT SHEETS AND WIRING DIAGRAMS WITH PRE–APPROVAL REQUEST. THE ELECTRICAL CONTRACTOR SHALL BE RESPONSIBLE FOR ANY DEVIATIONS FROM THE SYSTEM IN THE CONTRACT DOCUMENTS. 10 DAY PRIOR APPROVAL ON ALL ALTERNATE MANUFACTURERS IS REQUIRED.
7. THE LIGHTING CONTROL SYSTEM MANUFACTURER SHALL PROVIDE SHOP DRAWINGS AND FACTORY STARTUP.
8. LIGHTING CONTROL MANUFACTURER SHALL INCLUDE IN SUBMITTAL PACKAGE A CONTROL BLOCK DIAGRAM, SPECIFIC SENSOR MOUNTING LOCATIONS, AND CONTROL WIRING CONFIGURATION AS REQUIRED FOR A FULLY FUNCTIONING SYSTEM AS INDICATED ON THE DRAWINGS.
9. "WG" ON DEVICES INDICATES WIRE GUARD. WIRE GUARD TO BE PROVIDED BY MANUFACTURER AND NOT BY A THIRD PARTY REPRESENTATIVE.
10. ALL LIGHTING RELAYS CONNECTED TO THE CONDITIONAL INPUT MODULE SHALL BE CONNECTED SUCH THAT UPON AN EMERGENCY ALARM OVERRIDE HAS BEEN INITIATED IT WILL OVERRIDE ALL OTHER LIGHTING CONTROLS AND CAUSE THE FIXTURE TO BE 'ON' AND 'FULL BRIGHT'.

AUXILIARY

SYMBOLS BELOW FOR AUXILIARY OUTLETS, SEE AUXILIARY OUTLET DETAIL FOR DESCRIPTIONS

- E WAP
- Z# SS ANALOG PAGING SPEAKER – SOUNDSPHERE# SS–Q–6–BK CONNECTED TO PA SYSTEM AS REQUIRED. Z# INDICATES CONNECTED ZONE
- PA NEW PAGING SYSTEM HEAD END SHALL BE VALCOM# VIP–204B PAGEPRO IP WITH VIP–801 ADVANCED NETWORK AUDIO PORT, WALL–MOUNTED ADJACENT TO IT RACK. CONTRACTOR TO PROVIDE CONNECTION (INCLUDING CABLING IN 3/4"C, CONNECTIONS, PROGRAMMING, ETC.) AS REQUIRED TO PROVIDE LINE–LEVEL INPUT FROM RADIO SYSTEM (IN RADIO ROOM 111) TO PA SYSTEM HEAD–END AND ALL ZONES (ANALOG AND IP BASED SPEAKERS). CONTRACTOR TO PROVIDE CONNECTION (INCLUDING CABLING IN 3/4"C, HARDWARE, CONNECTIONS, PROGRAMMING, ETC.) AS REQUIRED TO PROVIDE INPUT FROM OWNER'S TELEPHONE SYSTEM (IN ELEC ROOM 106) TO PA SYSTEM HEAD–END AND ALL ZONES (ANALOG AND IP BASED SPEAKERS).
- Z# S IP PAGING SPEAKER – VALCOM# V–9022A–2 (RECESSED IN CEILING) CONNECTED TO PAGING SYSTEM (THRU NETWORK AUDIO PORT) AS REQUIRED. Z# INDICATES CONNECTED ZONE
- Z# VC PAGING SPEAKER VOLUME CONTROL CONNECTED TO PAGING SYSTEM AS REQUIRED. Z# INDICATES CONTROLLED ZONE. +44" TO BOTTOM
- DB DOOR BUZZER – PUSH BUTTON IN FLUSH–MOUNTED 4" SQUARE BOX WITH SINGLE GANG PLASTER RING. CONNECT TO PAGING SYSTEM AS REQUIRED SUCH THAT WHEN THE BUTTON IS DEPRESSED, A SIGNAL/ TONE IS BROADCAST OVER ALL SPEAKERS/ ZONES CONNECTED TO PAGING SYSTEM.
- +72" TV PAGING SPEAKER VOLUME CONTROL CONNECTED TO PAGING SYSTEM AS REQUIRED. Z# INDICATES CONTROLLED ZONE
- +72" WD WALL DISPLAY OUTLET – SEE AV BLOCK DIAGRAM CLASSROOM/ TRAINING 101
- AVI AUDIO/ VIDEO INPUT, DATA OUTLET – SEE AV BLOCK DIAGRAM CLASSROOM/ TRAINING 101
- DAVI DIGITAL AUDIO/ VIDEO INPUT OUTLET – SEE AV BLOCK DIAGRAM CLASSROOM/ TRAINING 101
- AVO AUDIO/ VIDEO OUTPUT – SEE AV BLOCK DIAGRAM CLASSROOM/ TRAINING 101
- HR HDMI RECEIVER – SEE AV BLOCK DIAGRAM CLASSROOM/ TRAINING 101
- DA HDMI TRANSMITTER – SEE AV BLOCK DIAGRAM CLASSROOM/ TRAINING 101
- C INTERIOR VIDEO SURVEILLANCE CEILING CAMERA LOCATION – CAMERA, CAMERA INSTALLATION, CAMERA LICENSING, VIDEO MANAGEMENT SYSTEM, PROGRAMMING BY OTHERS (N.I.C.). FLUSH–MOUNTED 4" SQUARE BOX (IN CEILING) WITH SINGLE GANG PLASTER RING AND TWO (2) EACH CAT6 RJ45 (LEVITON# 61110–R – OR EQUAL), ONE (1) EACH BLANK IN 3–PORT FACEPLATE. FURBISH AND INSTALL TWO (2) EACH CAT6 CABLES IN 1"C. ROUTE CONDUIT TO NEAREST CABLE TRAY AND TERMINATE WITH SMOOTH BUSHING (LABEL CONDUIT PER SPECS). ROUTE CABLING TO IT RACK AND TERMINATE ON PATCH PANEL AS REQUIRED.
- CW EXTERIOR VIDEO SURVEILLANCE WALL CAMERA LOCATION – CAMERA, CAMERA INSTALLATION, CAMERA LICENSING, VIDEO MANAGEMENT SYSTEM, PROGRAMMING BY OTHERS (N.I.C.). FLUSH–MOUNTED 4" SQUARE BOX (AT +10FT, VERIFY HEIGHT WITH OWNER/ ARCHITECT PRIOR TO ROUGH–IN) WITH SINGLE GANG PLASTER RING AND TWO (2) EACH CAT6 RJ45 (LEVITON# 61110–R – OR EQUAL), ONE (1) EACH BLANK IN 3–PORT FACEPLATE. FURNISH AND INSTALL TWO (2) EACH CAT6 CABLES IN 1"C. ROUTE CONDUIT TO NEAREST CABLE TRAY AND TERMINATE WITH SMOOTH BUSHING (LABEL CONDUIT PER SPECS). ROUTE CABLING TO IT RACK AND TERMINATE ON PATCH PANEL AS REQUIRED. THESE CABLES ARE CONSIDERED TO PENETRATE THE BUILDING ENVELOPE AND REQUIRE ENTRANCE PROTECTORS (SEE SPECIFICATIONS)
- 2S2 SLEEVES FOR AUXILIARY CABLING – TWO (2) EACH 2"C WITH STI EZ–PATH AT RATED PENETRATIONS
- 2S3 SLEEVES FOR AUXILIARY CABLING – THREE (3) EACH 2"C WITH STI EZ–PATH AT RATED PENETRATIONS
- CT4 CEILING MOUNTED, CENTER HUNG CABLE TRAY (CABLOFIL# CF105/100) COMPLETE WITH ALL HARDWARE AS REQUIRED. EACH SECTION TO BE GROUNDED.
- CT6 CEILING MOUNTED, CENTER HUNG CABLE TRAY (CABLOFIL# CF105/300) COMPLETE WITH ALL HARDWARE AS REQUIRED. EACH SECTION TO BE GROUNDED.
- CR ACCESS CONTROL CARD READER – AVIGILON# AC–HID–READER–SIGNO–40NKS–00–000000–AVG FLUSH MOUNTED IN 4" SQUARE BOX WITH SINGLE GANG PLASTER RING. CONNECT TO ACCESS CONTROL SYSTEM AS REQUIRED. SEE SPECIFICATIONS
- KP ACCESS CONTROL KEYPAD – AVIGILON# AC–HID–READER–SIGNO–40KNKS–00–000000–AVG FLUSH MOUNTED IN 4" SQUARE BOX WITH SINGLE GANG PLASTER RING. CONNECT TO ACCESS CONTROL SYSTEM AS REQUIRED. SEE SPECIFICATIONS
- AS ACCESS CONTROL SERVER – AVIGILON# AC–APP–16R–ENT2–6 MOUNTED IN IT RACK. CONNECT TO NETWORK AS REQUIRED. INCLUDE IN BID PACKAGE CARD WRITER/ PROGRAMMER (AVIGILON# AC–HID–READ–OMNIKEY–R54270101) SEE SPECIFICATIONS
- ACPS ACCESS CONTROL SERVER – AVIGILON# AC–APP–16R–ENT2–6 MOUNTED IN IT RACK. CONNECT TO NETWORK AS REQUIRED. SEE SPECIFICATIONS

EE Group Inc.
gadsden alabama
TEL: (256)413-7717
FAX: (256)413-7786
WEB: WWW.EEGRPINC.COM
Job No. 4712

ALABAMA REGISTERED PROFESSIONAL ENGINEER
No. 21242
11/15/2021
JACK R. MORGAN JR.

THOMAS M. McELRATH, ARCHITECT
ARCHITECTURE and SPACE PLANNING
717 MERIT SPRINGS ROAD
GADSDEN, ALABAMA 35901
PHONE: (256) 490-8244
EMAIL: TOM@TMM-ARCHITECT.COM

A NEW FIRE STATION NO. 1
located at
3170 Highway 77
for the
City of Southside, Alabama

ELECTRICAL LEGEND

DRAWN	JRM
CHECKED	JRM
SCALE	AS NOTED
DATE	NOVEMBER 15, 2021
FILE	
JOB NO.	21–01
REVISIONS	REVISED 6–13–21

SHEET E0.1 OF 12 SHEETS

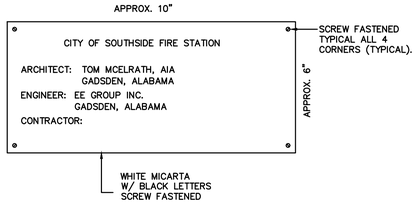

JOB NAMEPLATE

NOT TO SCALE

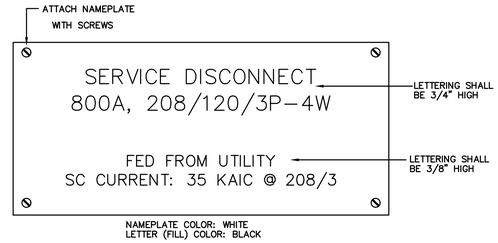

S.E. BREAKER NAMEPLATE

NOT TO SCALE

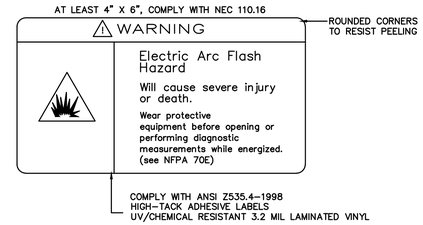

ARC FLASH HAZARD LABEL

ALL ELECTRICAL EQUIPMENT PER SPECIFICATIONS

NOT TO SCALE

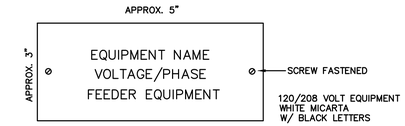

TYPICAL NAMEPLATES

ALL ELECTRICAL EQUIPMENT PER SPECIFICATIONS

NOT TO SCALE

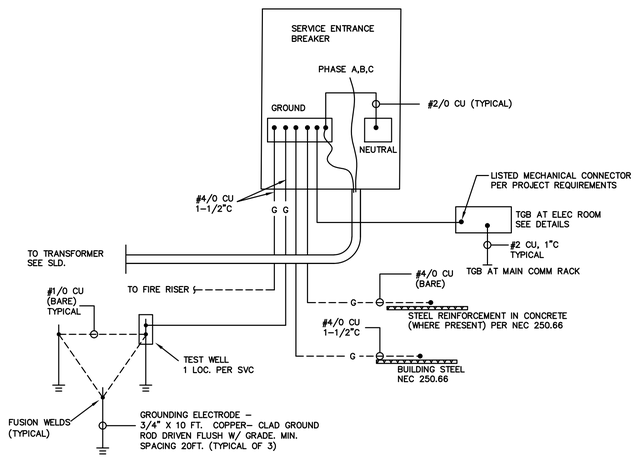

S.E. GROUNDING

NOT TO SCALE

DEAIL NOTES:

1. BOND METAL PIPING SYSTEMS INCLUDING GAS PIPING TO THE SERVICE EQUIPMENT ENCLOSURE PER NEC 250.104(B), SIZED PER 250.122 BASED ON THE SIZE OF THE CIRCUIT SUPPLYING THE EQUIPMENT.

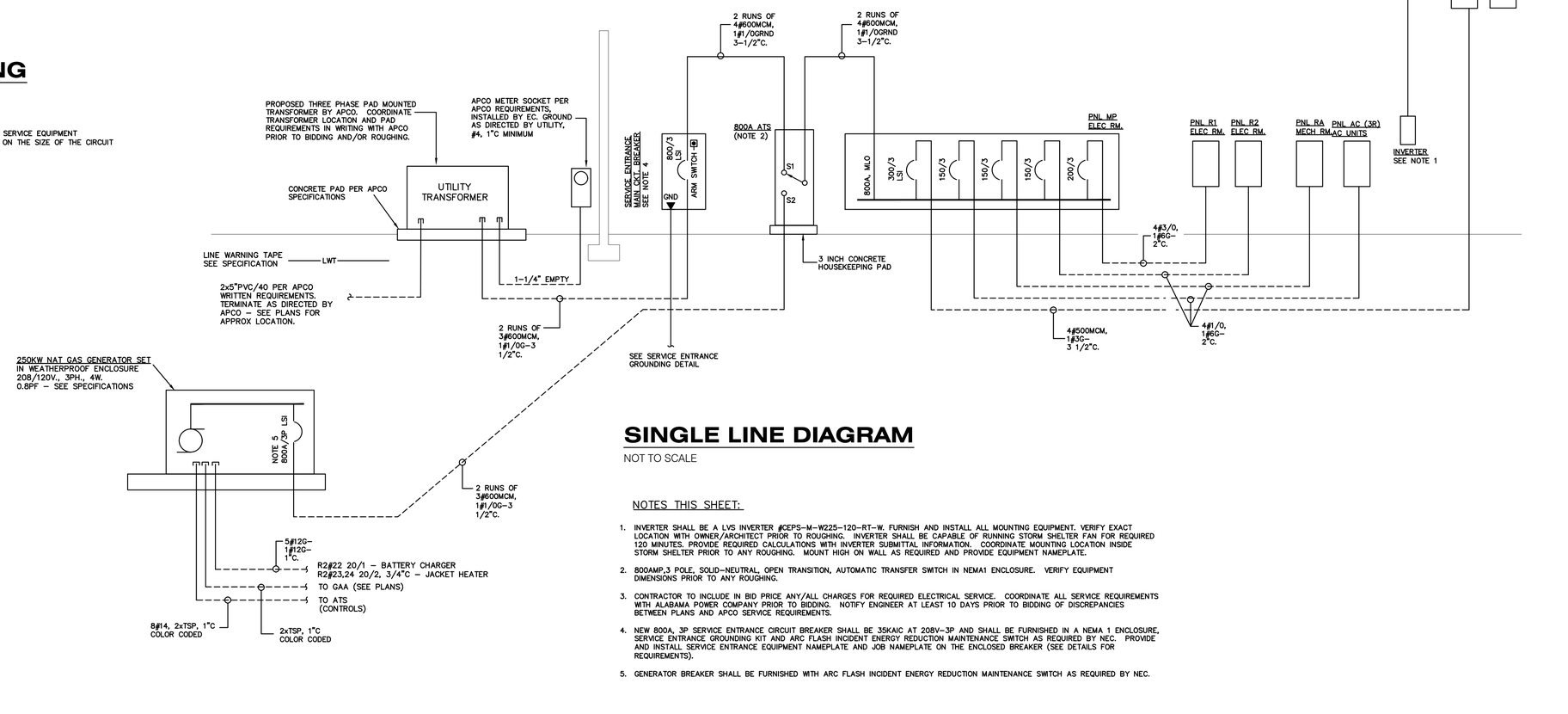

SINGLE LINE DIAGRAM

NOT TO SCALE

NOTES THIS SHEET:

1. INVERTER SHALL BE A LVS INVERTER #CEPS-M-W225-120-RT-W. FURNISH AND INSTALL ALL MOUNTING EQUIPMENT. VERIFY EXACT LOCATION WITH OWNER/ARCHITECT PRIOR TO ROUGHING. INVERTER SHALL BE CAPABLE OF RUNNING STORM SHELTER FAN FOR REQUIRED 120 MINUTES. PROVIDE REQUIRED CALCULATIONS WITH INVERTER SUBMITTAL INFORMATION. COORDINATE MOUNTING LOCATION INSIDE STORM SHELTER PRIOR TO ANY ROUGHING. MOUNT HIGH ON WALL AS REQUIRED AND PROVIDE EQUIPMENT NAMEPLATE.
2. 800AMP,3 POLE, SOLID-NEUTRAL, OPEN TRANSITION, AUTOMATIC TRANSFER SWITCH IN NEMA1 ENCLOSURE. VERIFY EQUIPMENT DIMENSIONS PRIOR TO ANY ROUGHING.
3. CONTRACTOR TO INCLUDE IN BID PRICE ANY/ALL CHARGES FOR REQUIRED ELECTRICAL SERVICE. COORDINATE ALL SERVICE REQUIREMENTS WITH ALABAMA POWER COMPANY PRIOR TO BIDDING. NOTIFY ENGINEER AT LEAST 10 DAYS PRIOR TO BIDDING OF DISCREPANCIES BETWEEN PLANS AND APCO SERVICE REQUIREMENTS.
4. NEW 800A, 3P SERVICE ENTRANCE CIRCUIT BREAKER SHALL BE 35KAIC AT 208V-3P AND SHALL BE FURNISHED IN A NEMA 1 ENCLOSURE, SERVICE ENTRANCE GROUNDING KIT AND ARC FLASH INCIDENT ENERGY REDUCTION MAINTENANCE SWITCH AS REQUIRED BY NEC. PROVIDE AND INSTALL SERVICE ENTRANCE EQUIPMENT NAMEPLATE AND JOB NAMEPLATE ON THE ENCLOSED BREAKER (SEE DETAILS FOR REQUIREMENTS).
5. GENERATOR BREAKER SHALL BE FURNISHED WITH ARC FLASH INCIDENT ENERGY REDUCTION MAINTENANCE SWITCH AS REQUIRED BY NEC.

EE Group Inc.
gadsden alabama
TEL: (256)413-7717
FAX: (256)413-7789
WEB: WWW.EEGRPINC.COM
Job No. 4712

ALABAMA LICENSED PROFESSIONAL ENGINEER No. 21242 11/15/2021 JACK R. MORGAN

THOMAS M. McELRATH, ARCHITECT
ARCHITECTURE and SPACE PLANNING
717 MERIT SPRINGS ROAD
GADSDEN, ALABAMA 35901
PHONE: (256) 490-8244
EMAIL: TOM@TMM-ARCHITECT.COM

A NEW FIRE STATION NO. 1
located at
3170 Highway 77
for the
City of Southside, Alabama

ELECTRICAL SINGLE LINE DIAGRAM

DRAWN	JRM
CHECKED	JRM
SCALE	AS NOTED
DATE	NOVEMBER 15, 2021
FILE	
JOB NO.	21-01
REVISIONS	REVISED 6-13-21

SHEET E0.2 OF 12 SHEETS

FIXTURE SCHEDULE

TYPE	MANUFACTURER	CATALOG NUMBER	LAMPS			MOUNTING		REMARKS	EQUALS
			# LAMPS	LUMENS/WATTS	TYPE	TYPE	RECESS DEPTH		
L2	METALUX	22CZ-LD5-39-UNV-L835-CD1-U	1	3932L/36W (NOMINAL)	LED	RECESSED	3-1/4"	2X2 RECESSED FLAT PANEL, WITH 0-10V DIMMING. COORDINATE CEILING TYPE WITH ARCHITECT.	OR APPROVED EQUAL
L2E	METALUX	22CZ-LD5-39-UNV-EL14W-L835-CD1-U	1	3932L/36W (NOMINAL)	LED	RECESSED	3-1/4"	2X2 RECESSED FLAT PANEL, WITH 0-10V DIMMING. FIXTURE FURNISHED WITH INTEGRAL BATTERY. COORDINATE CEILING TYPE WITH ARCHITECT.	OR APPROVED EQUAL
L4	METALUX	24CZ-LD5-45-UNV-L835-CD1- U	1	4469L/36W (NOMINAL)	LED	RECESSED	3-1/4"	2X4 RECESSED FLAT PANEL,WITH 0-10V DIMMING. COORDINATE CEILING TYPE WITH ARCHITECT.	OR APPROVED EQUAL
L4E	METALUX	24CZ-LD5-45-UNV-EL14W-L835-CD1- U	1	4469L/36W (NOMINAL)	LED	RECESSED	3-1/4"	2X4 RECESSED FLAT PANEL, WITH 0-10V DIMMING. FIXTURE FURNISHED WITH INTEGRAL BATTERY. COORDINATE CEILING TYPE WITH ARCHITECT.	OR APPROVED EQUAL
R6	PATHWAY	6LBV-40-35K-E1-DA-6PLED-SCLPF	1	2000L/22W (NOMINAL)	LED	RECESSED	6-1/2"	6" DIA RECESSED DOWNLIGHT, WITH 0-10V DIMMING. COORDINATE CEILING TYPE WITH ARCHITECT.	OR APPROVED EQUAL
R6E	PATHWAY	6LBV-40-35K-E1-DA-EM-6PLED-SCLPF	1	2000L/22W (NOMINAL)	LED	RECESSED	6-1/2"	6" DIA RECESSED DOWNLIGHTWITH 0-10V DIMMING. FIXTURE FURNISHED WITH INTEGRAL BATTERY. COORDINATE CEILING TYPE WITH ARCHITECT.	OR APPROVED EQUAL
S4	METALUX	4SNLED-LD5-47SL-LW-UNV-L835-CD-1-U	1	4892L/41W (NOMINAL)	LED	SURFACE	----	4FT STRIP FIXTURE, LENSED, WITH 0-10V DIMMING. COORDINATE CEILING TYPE WITH ARCHITECT.	OR APPROVED EQUAL
S4E	METALUX	4SNLED-LD5-47SL-LW-UNV-EL14W-L835-CD-1-U	1	4892L/41W (NOMINAL)	LED	SURFACE	----	4FT STRIP FIXTURE, LENSED, WITH 0-10V DIMMING. FIXTURE FURNISHED WITH INTEGRAL BATTERY. COORDINATE CEILING TYPE WITH ARCHITECT.	OR APPROVED EQUAL
H1	METALUX	RHL-100-VS-4K-WH	1	14000L/100W (NOMINAL)	LED	PENDANT	----	COORDINATE WITH ARCHITECTURAL ELEVATIONS EXACT MOUNTING HEIGHT AND PENDANT LENGTH PRIOR TO ANY/ALL ROUGHING. COLOR/FINISH TO BE SELECTED BY ARCHITECT/OWNER. FIXTURE PROVIDED WITH 0-10V DIMMING.	OR APPROVED EQUAL
H1E	METALUX	RHL-100-VS-4K-WH-BB	1	14000L/100W (NOMINAL)	LED	PENDANT	----	COORDINATE WITH ARCHITECTURAL ELEVATIONS EXACT MOUNTING HEIGHT AND PENDANT LENGTH PRIOR TO ANY/ALL ROUGHING. COLOR/FINISH TO BE SELECTED BY ARCHITECT/OWNER. FIXTURE FURNISHED WITH INTEGRAL BATTERY AND 0-10V DIMMING.	OR APPROVED EQUAL
XE1	EXITRONIX	452-WB-BA	WITH UNIT			SURFACE WALL/CEILING	----	SINGLE FACE EXIT FIXTURE WITH RED LETTERING FURNISHED WITH INTEGRAL BATTERY. PROVIDE UNIVERSAL MOUNTING KIT.	OR APPROVED EQUAL
W1	MCGRAW EDISON	GWC-SA1-C-740-U-T3-**-F	1	7556L/59W (NOMINAL)	LED	SURFACE WALL	-----	LED WALL PACK, COLOR/FINISH TO BE SELECTED BY ARCHITECT/OWNER. SEE PLANS FOR MOUNTING HEIGHT.	OR APPROVED EQUAL
W1E	MCGRAW EDISON	GWC-SA1-C-740-U-T3-**-F-CBP	1	7556L/59W (NOMINAL)	LED	SURFACE WALL	-----	LED WALL PACK, COLOR/FINISH TO BE SELECTED BY ARCHITECT/OWNER. SEE PLANS FOR MOUNTING HEIGHT. FURNISHED WITH INTEGRAL BATTERY.	OR APPROVED EQUAL
W2	MCGRAW EDISON	GWC-SA2-C-740-T4W-F	1	14658L/113W (NOMINAL)	LED	SURFACE WALL	-----	LED WALL PACK, COLOR/FINISH TO BE SELECTED BY ARCHITECT/OWNER. SEE PLANS FOR MOUNTING HEIGHT.	OR APPROVED EQUAL
PL1	MCGRAW EDISON	GLAN-SA4-C-740-U-T4W-**-F-BPC	1	27832L/213W (NOMINAL)	LED	POLE MOUNTED	-----	POLE MOUNTED 25'-0". L.E.D. LUMINAIRE, TYPE 4 WIDE DISTRIBUTION. 4000K. MOUNTED ON CONCRETE BASE (SEE DETAIL). POLE SHALL MEET CURRENT IBC WIND LOAD RATING FOR THIS REGION. COLOR/FINISH TO BE SELECTED BY ARCHITECT/OWNER.	OR APPROVED EQUAL
FP	NLS LIGHTING	NV-F1-30-16L-35-40K-UNV-KM-**-**-ECL-**TPH	1	4060L/35W (NOMINAL)	LED	STANCHION KNUCKLE	-----	STANCHION MOUNT FLOOD LIGHT (FOR FLAG POLE SEE PLANS) WITH NARROW SPOT AND EGG CRATE LOUVER WITH KNUCKLE. COORDINATE WITH MANUFACTURER MOUNTING HARDWARE PRIOR TO ANY/ALL ORDERING. COLOR/FINISH TO BE SELECTED BY ARCHITECT/OWNER.	OR APPROVED EQUAL
EEGRP JOB# 4712									

FIXTURE SCHEDULE NOTES:

1. LED LAMPS: KELVIN TEMPERATURES: ALL KELVIN TEMPERATURES LISTED SHALL BE MET WITHIN +/−5% LOSS FACTOR OF 1.0 FOR APPROVAL. WATTAGE: ALL RATED INPUT WATTAGES LISTED SHALL BE MET WITHIN +/−5%. LARGER VARIATIONS WILL NOT BE ACCEPTED.
2. FURNISH PLASTER FRAMES FOR ALL RECESSED LUMINAIRES IN PLASTER CEILINGS.
3. CONTRACTOR SHALL VERIFY EXACT TYPE CEILINGS BEING INSTALLED AND SUPPLY BASIC LUMINAIRES SPECIFIED IN APPROPRIATE CONFIGURATION FOR CELING TO BE FURNISHED.
4. LUMINAIRE MOUNTING AND SUSPENSION SHALL BE AS APPROVED BY ENGINEER AND NO COMBUSTIBLE MATERIALS SHALL BE USED.
5. PROVIDE DEVICES FOR SECURING LUMINAIRE TO CELING GRID TO COMPLY WITH ARTICLE 410.36 OF THE 2014 NATIONAL ELECTRICAL CODE FOR ALL LAY−IN TYPE LUMINAIRES. BENT TAB TYPE NOT ACCEPTABLE.
6. FURNISH FACTORY PAINTED COLOR SELECTED BY ARCHITECT.
7. FURNISH COMPLETE WITH SWIVEL HANGER STEMS, LENGTH AS REQUIRED TO MOUNT BELOW PIPING, DUCT, CABLE RACKS, ETC., MINIMUM 7'−6"H. MAINTAIN UNIFORM MOUNTING HEIGHT OF ALL LUMINAIRES THROUGHOUT EACH AREA.
8. ALL APPROVED MANUFACTURERS SUBMITTING FOR PRIOR APPROVAL SHALL PROVIDE A SITE LAYOUT REFLECTING THAT FOOTCANDLES MEET CURRENT CITY CODES AND STANDARDS FOR L.E.D. SITE LIGHTING WITH LAYOUT SHOWN ON SITE PLAN.
9. EPA RATING FOR POLES SHALL MEET CURRENT IBC WIND LOAD CHART FOR THIS REGION.
10. ALL PRIOR APPROVAL MUST BE SUBMITTED 10 BUSINESS DAYS PRIOR TO BID. SUBMIT IN .PDF FORMAT. MANUFACTURER IS RESPONSIBLE FOR REVIEWING ADDENDUM FOR LUMINAIRE APPROVAL. ANY SUBMITTED UNITS NOT ON ADDENDUM SHALL BE CONSIDERED NOT−APPROVED. MANUFACTOR MAY EMAIL SUBMITTALS TO PLANS@EEGRPINC.COM
11. LIGHTING CONTROL LAYOUT IS FOR INTENT OF DESIGN ONLY. EACH APPROVED MANUFACTURER SHALL CONSIDER CONTROL FUNCTION OF EACH AREA AND PROVIDE ALL NECESSARY DEVICES AND BRANCH CIRCUITING FOR A COMPLETE SYSTEM. QUANTITIY OF (CEILING MOUNTED OCCUPANCY SENSORS, WALL STATIONS, CONTROL CABLE, ETC.) ARE BASED ON A LUTRON SYSTEM. IT IS THE RESPONSIBILITY OF THE APPROVED MANUFACTURER TO PROVIDE QUANTITIES AS HIS/HER SYSTEM REQUIRES FOR COMPLETE OPERATION. OTHER LIGHTING CONTROL LAYOUTS MUST BE SUBMITTED FOR PRE APPROVAL 10 BUSINESS DAYS PRIOR TO BID. SUBMIT IN PDF FORMAT. MANUFACTURER IS RESPONSIBLE FOR REVIEWING ADDENDUM FOR LUMINAIRE APPROVAL. ANY SUBMITTED UNITS NOT ON ADDENDUM SHALL BE CONSIDERED NOT−APPROVED. MANUFACTURE MAY EMAIL SUBMITTALS TO PLANS@EEGRPINC.COM
12. PROVIDE UNSWITCHED HOT TO EMERGENCY BATTERY. BATTERY SHALL OPERATE ONLY DURING LOSS OF POWER TO UNSWITCHED HOT.
13. LIGHTING BRANCH CIRCUITING PLANS DO NOT REFLECT THE ROUTING OF DIMMING CONTROL WIRES. COORDINATE DIMMING CONTROLS WITH APPROVED MANUFACTURER.
16. PROVIDE UL924 DEVICES AS REQUIRED FOR ALL LIGHTING LOADS CONNECTED TO EMERGENCY GENERATOR/INVERTER. SEE PLANS.
17. ALL LIGHTING AND LIGHTING CONTROLS THIS PROJECT HAS BEEN DESIGNED AROUND LOCAL CODES AND ORDINANCES.

PANELBOARD SCHEDULE

NAME PLATE INFORMATION	MARK	TYPE	MAINS			BRANCHES					MTD.	REMARKS	APPROVED EQUALS	AVAILABLE FAULT CURRENT	SURGE PROTECTION DEVICE
			TYPE	AMPS	SERVICE	1-POLE	2-POLE	3-POLE	SPARES	SPACES					
MP 120/208V 3P,4W FED FROM UTILITY	MP	SQUARE 'D' I-LINE HCM 800AMP	MB	800	120/208V 3P,4W	-----	-----	1-30 A, 3-150 A, 1-200 A, 1-400 A,	1-150/3	-----	SURFACE	ELECTRICAL ROOM 121	G.E. , SIEMENS, CUTLER HAMMER	35,056	SURGE SUPPRESSION INC. CSEB-3Y1-21
R1 120/208V 3P,4W FED FROM MP	R1	SQUARE 'D' NQOD 225AMP	MLO	200	120/208V 3P,4W	39-20 A,	-----	-----	3-20/1	-----	SURFACE	ELECTRICAL ROOM 121	G.E. , SIEMENS, CUTLER HAMMER	23,797	NONE
R2 120/208V 3P,4W FED FROM MP	R2	SQUARE 'D' NQOD 225AMP	MLO	150	120/208V 3P,4W	20-20 A, 9-20 A AFCI, 1-20 A ST,	1-20 A,	-----	5-20/1	5-1P	SURFACE	ELECTRICAL ROOM 121	G.E. , SIEMENS, CUTLER HAMMER	22,008	NONE
R3 120/208V 3P,4W FED FROM MP	R3	SQUARE 'D' NQOD 400AMP	MLO	300	120/208V 3P,4W	17-20 A, 4-20 A GFCI, 1-30 A,	3-20 A, 2-30 A,	3-60 A,	10-20/1	9-1P	SURFACE	MEZZANINE, 2 SECTION 30 POSITIONS EACH	G.E. , SIEMENS, CUTLER HAMMER	7,644	NONE
RA 120/208V 3P,4W FED FROM MP	RA	SQUARE 'D' NQOD 225AMP	MLO	150	120/208V 3P,4W	20-20 A, 8-30 A,	-----	1-60 A,	5-20/1, 2-30/1	3-1P	SURFACE	GENERAL STORAGE 128	G.E. , SIEMENS, CUTLER HAMMER	6,162	NONE
AC 120/208V 3P,4W FED FROM MP	AC	SQUARE 'D' NQOD 225AMP	MLO	150	120/208V 3P,4W	1-20 A,	2-20 A, 3-25 A, 1-30 A,	-----	1-20/2, 1-25/2, 1-30/2	13-1P	SURFACE	NEMA 3R	G.E. , SIEMENS, CUTLER HAMMER	11,295	NONE

EE Group Inc.
gadsden alabama
TEL: (256)413-7717
FAX: (256)413-7789
WEB: WWW.EEGRPINC.COM
Job No. 4712

ALABAMA LICENSED PROFESSIONAL ENGINEER No. 21242 11/15/2021 JACK R. MORGAN JR.

THOMAS M. McELRATH, ARCHITECT
ARCHITECTURE and SPACE PLANNING
717 MERIT SPRINGS ROAD
GADSDEN, ALABAMA 35901
PHONE: (256) 490-8244
EMAIL: TOM@TMM-ARCHITECT.COM

A NEW FIRE STATION NO. 1
located at
3170 Highway 77
for the
City of Southside, Alabama

ELECTRICAL PANEL SCHEDULES

DRAWN	JRM
CHECKED	JRM
SCALE	AS NOTED
DATE	NOVEMBER 15, 2021
FILE	
JOB NO.	21−01
REVISIONS	REVISED 6−13−21

SHEET E0.3 OF 12 SHEETS

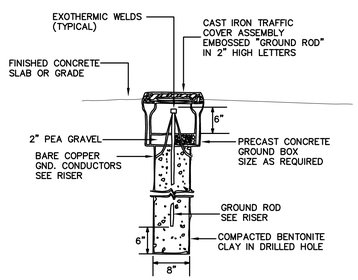

GROUND ROD TEST WELLS

(1 REQD. PER SERVICE)

NOT TO SCALE

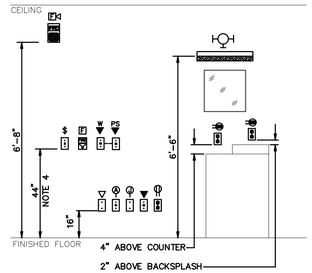

TYPICAL MOUNTING HEIGHTS

NOT TO SCALE

NOTES:

1. INDICATED MOUNTING HEIGHTS ARE FROM FINISHED FLOOR TO BOTTOM OF OUTLET BOX, UNLESS OTHERWISE NOTED.
2. REFER TO ARCHITECTURAL DETAILS FOR ADDITIONAL REQUIREMENTS.
3. INSTALL OUTLETS THAT ARE IN CLOSE PROXIMITY ON THE SAME CENTERLINE.
4. INDICATED DEVICES MOUNTED IN A BLOCK WALL SHALL BE 4'-0" TO TOP OF COVER PLATE.

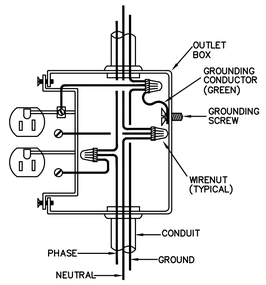

RECEPTACLE INSTALLATION

NOT TO SCALE

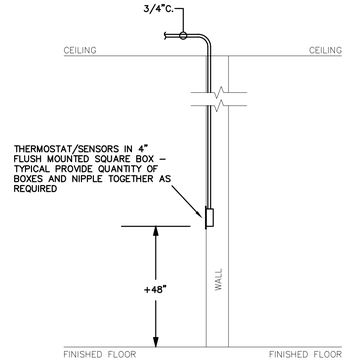

MECHANICAL CONTROLS

NOT TO SCALE

DETAIL NOTES:

1. SEE MECHANICAL PLANS FOR CONTROL DEVICE LOCATIONS. VERIFY EXACT HEIGHT AND LOCATIONS AND CONDUIT TERMINATIONS WITH MECHANICAL CONTRACTOR PRIOR TO ANY ROUGHING.

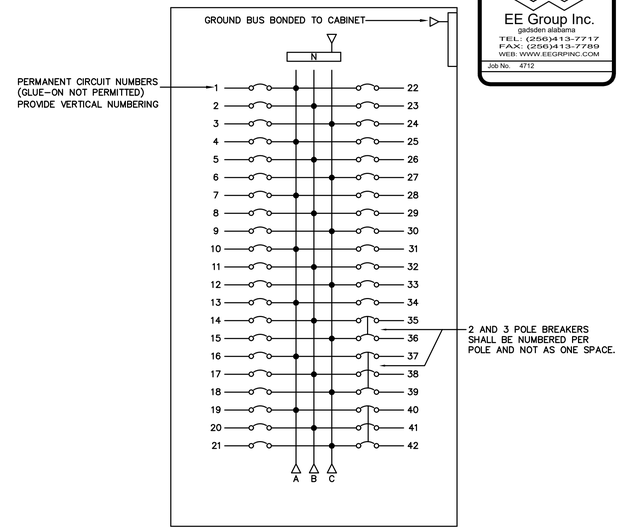

PANELBOARD NOTES

NOT TO SCALE

DETAIL NOTES:

1. ARRANGE BREAKERS AS FOLLOWS: 1 POLE, LOW TO HIGH TRIP; 2 POLE, LOW TO HIGH TRIP; 3 POLE, LOW TO HIGH TRIP; SPARES THEN SPACE.
2. ALL PANELS TO HAVE DOOR-IN-DOOR (HINGED TRIM) CONSTRUCTION.
3. FOR SURFACE MOUNTED PANELS INSTALL ALL NAMEPLATES (PER DETAILS) USING MACHINE SCREWS. FOR FLUSH PANELS IN FINISHED SPACES, INSTALL NAMEPLATES TO INSIDE OF DOOR USING 2 PART EPOXY (12HR)
4. FOR ALL FLUSH PANELS, FURNISH AND INSTALL 4EA. 1" EMPTY CONDUITS TO ABOVE NEAREST ACCESSIBLE CLG, LABELS AS SPARES AND PROVIDE REQD. FIRESTOP.
5. ALL PANELS TO HAVE WELDED METAL DIRECTORY CARD HOLDERS.

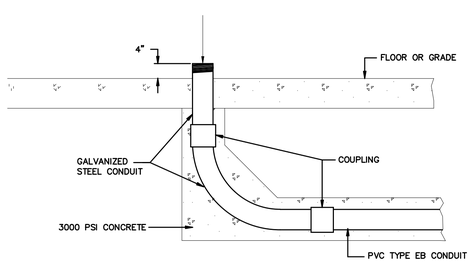

CONDUIT FLOOR PENETRATION

NOT TO SCALE

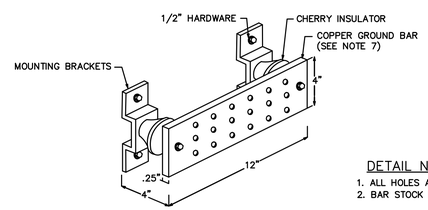

DETAIL NOTES:

1. ALL HOLES ARE COUNTERSUNK 1/16".
2. BAR STOCK IS 1/4" THICK.

TYPICAL GROUND BUS

NOT TO SCALE

DETAIL NOTES:

1. FURNISH AND INSTALL BUS BAR AND CONDUCTORS AS SHOWN UNLESS OTHERWISE NOTED.
2. LABEL ALL BUS BARS WITH PERMANENT ENGRAVED NAMEPLATE.
3. GROUNDING CONDUCTORS, OTHER THAN AC POWER FEEDERS SHALL BE INSTALLED IN NONMETALLIC RIGID CONDUITS EXCEPT AS NOTED.
4. GROUND BAR CONDUCTORS SHALL NOT SHARE CONDUITS OR PULL BOXES WITH CONDUCTORS OR CABLES OF OTHER SYSTEMS.
5. PULL BOX USED FOR GROUND CONDUCTORS SHALL BE NONMETALLIC.
6. SEE SPECIFICATIONS FOR REQUIRED MAXIMUM RESISTANCE TO GROUND.
7. GROUND BAR KIT SHALL BE OTRONICS# WWBB-12 MOUNT INSULATORS DIRECT TO INSIDE BACKING OF NEMA 3R ENCLOSURE (SEE EQUIPMENT ELEVATIONS FOR APPROXIMATE LOCATION). ENCLOSURE SHALL BE SIZE SUCH THAT ADIQUATE WIRE BENDING SPACE IS PROVIDED ON ALL SIDES.

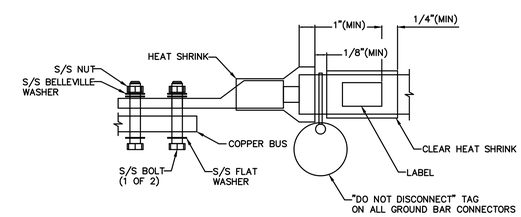

TYPICAL GROUNDING LUG

NOT TO SCALE

DETAIL NOTES:

1. FURNISH AND INSTALL BUS BAR AND CONDUCTORS AS SHOWN UNLESS OTHERWISE NOTED.
2. LABEL ALL BUS BARS WITH PERMANENT ENGRAVED NAMEPLATE.
3. GROUNDING CONDUCTORS, OTHER THAN AC POWER FEEDERS SHALL BE INSTALLED IN NON-METALLIC RIGID CONDUITS EXCEPT AS NOTED.
4. GROUND BAR CONDUCTORS SHALL NOT SHARE CONDUITS OR PULL BOXES WITH CONDUCTORS OR CABLES OF OTHER SYSTEMS.
5. PULL BOX USED FOR GROUND CONDUCTORS SHALL BE NONMETALLIC.
6. SEE SPECIFICATIONS FOR REQUIRED MAXIMUM RESISTANCE TO GROUND.
7. PROVIDE AND INSTALL IDENTIFICATION ON BOTH ENDS OF EACH GROUNDING CONDUCTOR INDICATING DESTINATION.

GENERAL GROUNDING LUG NOTES:

1. ALL HARDWARE SHALL BE STAINLESS STEEL INCLUDING BELLEVILLES. COAT ALL SURFACES WITH KOPR-SHIELD BEFORE MATING,
2. FOR GROUND BOND TO STEEL ONLY: INSERT A DRAGON TOOTH WASHER BETWEEN LUG AND

EE Group Inc.
gadsden alabama
TEL: (256)413-7717
FAX: (256)413-7789
WEB: WWW.EEGRPINC.COM
Job No. 4712

ALABAMA PROFESSIONAL ENGINEER No. 21242 11/15/2021 JACK R. MORGAN

THOMAS M. McELRATH, ARCHITECT
ARCHITECTURE and SPACE PLANNING
717 MERIT SPRINGS ROAD
GADSDEN, ALABAMA 35901
PHONE: (256) 490-8244
EMAIL: TOM@TMM-ARCHITECT.COM

A NEW FIRE STATION NO. 1
located at
3170 Highway 77
for the
City of Southside, Alabama

ELECTRICAL DETAILS

DRAWN	JRM
CHECKED	JRM
SCALE	AS NOTED
DATE	NOVEMBER 15, 2021
FILE	
JOB NO.	21-01
REVISIONS	REVISED 6-13-21

SHEET E0.4 OF 12 SHEETS

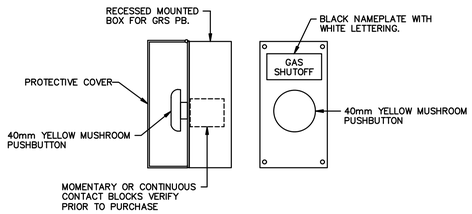

GAS SHUTOFF SWITCH

NOT TO SCALE

SYMBOL ● GSO

SEQUENCE OF CONTROL:

UPON ACTIVATION OF THE 'E911' PANEL, THE GAS SOLENOID VALVE SERVING THE RANGE SHALL CLOSE AND TURN OFF GAS SUPPLY. PUSH RESET BUTTON TO OPEN GAS VALVE. PROVIDE ALL CONTROL WIRING REQUIRED BETWEEN RESET BUTTON, GAS SOLENOID VALVE, AND 'E911' PANEL AS REQUIRED. VERIFY REQUIRED MOUNTING LOCATION WITH ARCHITECT AND PLUMBING ENGINEER PRIOR TO ANY ROUGHING.

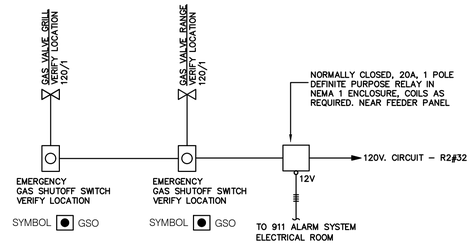

GAS STOVE & GRILL SHUTOFF

NOT TO SCALE

DETAIL NOTES:

1. CONNECT SUCH THAT GAS VALVE CLOSES AND IGNITOR POWER IS TURNED "OFF" WHEN ANY OF THE FOLLOWING OCCURS:
   - E911 SYSTEM INDICATES ALARM
   - HEAT DETECTOR AT RANGE IS INITIATED
   - GAS RESET SWITCH IS TURNED "OFF"
2. PROVIDE AND INSTALL RELAYS AS REQUIRED. RELAYS SHALL BE NORMALLY CLOSED, COIL VOLTAGE AS REQUIRED IN NEMA 1 ENCLOSURE.

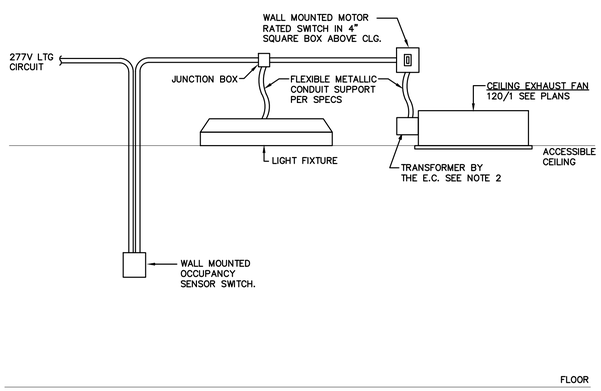

EXHAUST FAN CONTROL WIRING SWITCHED WITH LIGHTS

NOT-TO-SCALE

DETAIL NOTES:

1. COORDINATE ANY/ALL RELAYS AND/OR OTHER CONTROL CONNECTIONS WHERE THE ELECTRICAL CONTRACTOR IS RESPONSIBLE FOR PROVIDING POWER OR FINAL CONNECTIONS, WITH FINAL MECHANICAL DRAWINGS, APPROVED EQUIPMENT SUBMITTALS, AND ON SITE MECHANICAL CONTRATOR PRIOR TO ANY ROUGHING AND/OR ORDERING MATERIALS.
2. 277/120V TRANSFORMER, FURNISHED, INSTALLED, AND WIRED THE BY ELECTRICAL CONTRACTOR.

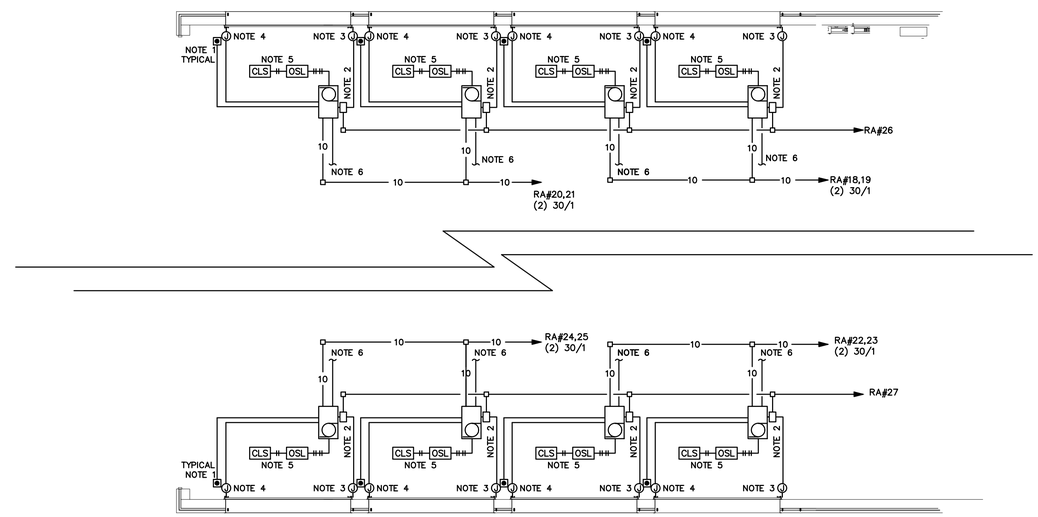

DOOR CONTROL ROUGHING AND NOTES

NOT TO SCALE

OVERHEAD DOOR CONNECTION NOTES:

1. FLUSH MOUNTED DOOR CONTROL SWITCH(ES) FURNISHED BY DOOR SUPPLIER, INSTALLED BY ELECTRICAL. CONTROL WIRING IN 3/4" EMPTY CONDUIT BY THE ELECTRICAL CONTRACTOR. COORDINATE WITH THE OVERHEAD DOOR SUPPLIER AND PROVIDE ALL WIRING AS REQUIRED FOR A FULL FUNCTIONING DOOR AS INTENDED. TYPICAL 5 LOCATIONS. DOOR SHALL HAVE THE CAPABILITY TO BE CONTROLLED FROM THIS LOCATION OR REMOTELY VIA THE BUILDING AUTOMATION CONTROL PANEL. VERIFY LOCATION FOR MANUAL DOOR CONTROL STATION WITH OWNER PRIOR TO ANY ROUGHING.
2. 20A, 120V, SINGLE POLE, ELECTRICALLY–HELD LIGHTING RELAY IN NEMA 1 ENCLOSURE WITH 24V COILS (VERIFY) FOR TRAFFIC SIGNAL (DOOR OPEN) LIGHT. VERIFY REQUIRED CONNECTIONS WITH DOOR SUPPLIER PRIOR TO ANY ROUGHING.
3. JUNCTION BOX FOR BAY DOOR SIGNAL LIGHT. INDICATOR LIGHT TO BE FURNISHED AND INSTALLED BY OVERHEAD DOOR CONTRACTOR AT 7'–6" A.F.F TO BOTTOM. LIGHT NORMALLY OFF; ON (GREEN) WHEN OVERHEAD DOOR IS FULLY OPENED. VERIFY ALL WIRING REQUIREMENTS PRIOR TO ANY WORK.
4. ELECTRICAL CONTRACTOR TO FURNISH AND INSTALL 3/4" EMPTY CONDUIT FROM DOOR CONTROLLER TO JUNCTION BOX MOUNTED AT APPROXIMATELY 7 FT. FOR ELECTRICAL LEADING EDGE SENSOR. OVERHEAD DOOR CONTRACTOR TO PROVIDE ALL WIRING BETWEEN SENSORS AND DOOR CONTROLLER WITH FINAL CONNECTIONS BY DOOR CONTRACTOR. ALL PHOTO SENSORS ARE LOW VOLTAGE AND MAY BE INSTALLED EXPOSED AND SUPPORTED TO THE DOOR TRACK. VERIFY EXACT HEIGHTS AND LOCATIONS PRIOR TO ANY ROUGHING.
5. OVERHEAD DOOR OPEN AND CLOSED LIMIT SWITCHES FURNISHED BY THE DOOR SUPPLIER. INSTALLED AND WIRED BY THE E.C.. LIMIT SWITCH TO OPERATE BAY DOOR SIGNAL LIGHT (ON–GREEN) WHEN DOOR IS FULLY OPENED. VERIFY ALL WIRING REQUIREMENTS PRIOR TO ANY WORK. TYPICAL WHERE SHOWN.
6. ROUTE 3/4" EMPTY CONDUIT FROM EACH DOOR CONTROLLER TO MASTER DOOR CONTROL STATION LOCATED IN APPARATUS ROOM. (FOR OPEN, CLOSE AND CURRENT POSITION) LOCATED IN THE MEZZANINE. ALL CONTROL WIRING TO B.A.S INSTALLED AND TERMINATED BY THE CONTROLS CONTRACTOR.

GENERAL NOTES:

1. OVERHEAD DOOR ROUGHING AND ELECTRICAL BASED ON INFORMATION FOR OVERHEAD DOOR INC. PRODUCT LINE.
2. VERIFY ALL ELECTRICAL BOXES, CONDUITS, WIRING AND LOCATIONS WITH APPROVED EQUIPMENT SUBMITTALS PRIOR TO ANY ROUGHING. PROVIDE ANY/ALL CONDUITS, BOXES AND WIRING REQUIRED FOR A FULL FUNCTIONING OVERHEAD DOOR SYSTEM AS SPECIFIED.

EE Group Inc.
gadsden alabama
TEL: (256)413-7717
FAX: (256)413-7789
WEB: WWW.EEGRPINC.COM
Job No. 4712

ALABAMA LICENSED PROFESSIONAL ENGINEER No. 21242 11/15/2021 JACK R. MORGAN

THOMAS M. McELRATH, ARCHITECT
ARCHITECTURE and SPACE PLANNING
717 MERIT SPRINGS ROAD
GADSDEN, ALABAMA 35901
PHONE: (256) 490-8244
EMAIL: TOM@TMM-ARCHITECT.COM

A NEW FIRE STATION NO. 1
located at
3170 Highway 77
for the
City of Southside, Alabama

ELECTRICAL DETAILS

DRAWN	JRM
CHECKED	JRM
SCALE	AS NOTED
DATE	NOVEMBER 15, 2021
FILE	
JOB NO.	21–01
REVISIONS	REVISED 6–13–21

SHEET E0.5 OF 12 SHEETS

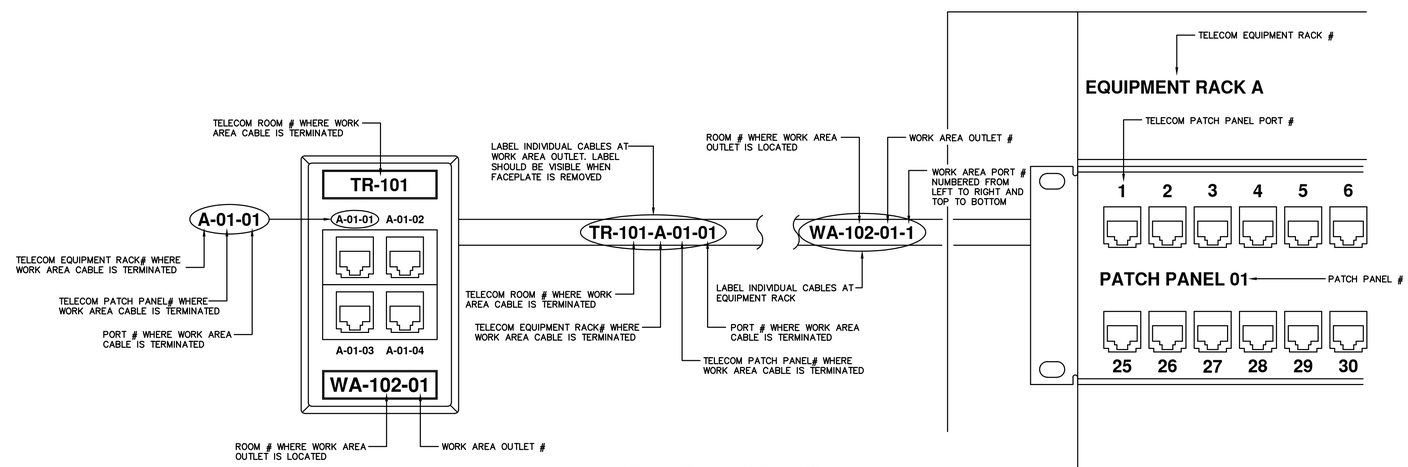

AUXILIARY LABELING

NOT TO SCALE

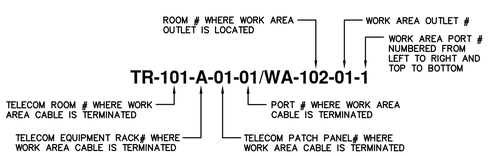

AUXILIARY LABELING

50ft ON CENTER

NOT TO SCALE

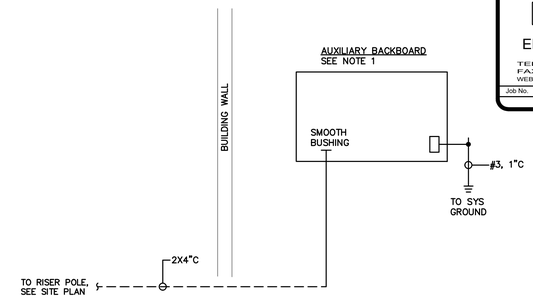

AUXILIARY RISER

NOT TO SCALE

AUXILIARY RISER NOTES

1. AUXILIARY BACKBOARD BBFS SHALL BE 48 INCHES WIDE, FLOOR–TO–CEILING, 3/4" PLYWOOD PAINTED TWO COATS BOTH SIDES AND EDGES. IT RACK SHALL BE MIDDLE ATLANTIC# SR–40–32. FURNISH AND INSTALL THE FOLLOWING EQUIPMENT:
   - TWO (2) EACH 48 PORT PATCH PANEL SHALL BE LEVITON# 69586–U48 (48–PORT, CAT6 HIGH–DENSITY PATCH PANEL).
   - 1 RACK UNIT HORIZONTAL CABLE MANAGER SHALL BE LEVITON# 491RU–HFR. PROVIDE QUANITY AT EACH LOCATION AS REQUIRED FOR ALL HORIZONTAL DATA AND VOICE CABLE TERMINATIONS WITH ADDITIONAL SPACE FOR 10% FUTURE GROWTH. PROVIDE 2 RACK UNITS OF HORIZONTAL CABLE MANAGEMENT PER EACH 24 PATCH OR SWITCH PORTS (ABOVE OR BELOW ASSOCIATED PATCH PANEL). ASSUME 1 SWITCH PORT FOR EACH PATCH PORT.
   - 2 RACK UNIT HORIZONTAL CABLE MANAGER SHALL BE LEVITON# 492RU–HFR. PROVIDE QUANITY AT EACH LOCATION AS REQUIRED FOR ALL HORIZONTAL DATA AND VOICE CABLE TERMINATIONS WITH ADDITIONAL SPACE FOR 10% FUTURE GROWTH. PROVIDE 2 RACK UNITS OF HORIZONTAL CABLE MANAGEMENT PER EACH 24 PATCH OR SWITCH PORTS (ABOVE OR BELOW ASSOCIATED PATCH PANEL). ASSUME 1 SWITCH PORT FOR EACH PATCH PORT.
   - BLANK FILLER PANEL SHALL BE LEVITON# 49254–BP2, 2 RU./ 49254–BP1, 1 RU. PROVIDE QUANITY AS REQUIRED FOR ALL BLANK SPACES IN CABINET.
   - RACK GROUNDING KIT SHALL BE HOFFMAN# PGK. PROVIDE 1 PER RACK AND CONNECT TO TELECOM GROUND BAR.
   - RACK GROUND BUS SHALL BE PGS4K. PROVIDE 1 PER RACK AND CONNECT TO TELECOM GROUND BAR.
   - AT EACH CABINET PROVIDE, AT A MINIMUM, THE FOLLOWING ACCESSORIES: COLOR CODED CABLE MANAGEMENT STRAPS (TO COORDINATE COLOR SCHEME WITH OWNER PRIOR TO ORDERING), 24" TUBULAR RUNWAY FOR ALL HORIZONTAL AND BACKBONE ENTRIES INTO RACK, 2 EACH VERTICAL POWER STRIPS (20AMP, 12 POSITION, WITH AMP METER – NO SWITCH), EQUIPMENT GROUND ASSEMBLY AND LADDER RACK SUPPORT.
   - ONE (1) EACH UPS (EATON# 5PX1500RTN), RACK MOUNT WITH NETWORK CARD.
   - ONE EACH QUICKPORT PATCH PANEL (LEVITON# 45255–S24) LOADED WITH TWENTY–FOUR (24) EACH "F" QUICK PORT CONNECTORS (LEVITON# 41084–FEF)
   - TWO (2) EACH 48 PORT, POE, GIGABIT THROUGHPUT, NETWORK SWITCHES. INCLUDE IN BID PRICE ANY/ ALL CHARGES BY SOUTHERN DATA AUTOMATION FOR SWITCH PROGRAMMING AND INTEGRATION (CONTACT TODD POLK (256) 546–4010)

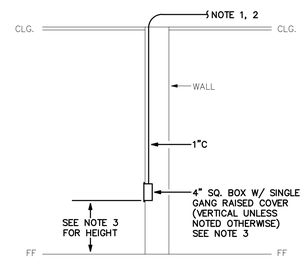

AUXILIARY OUTLETS

NOT TO SCALE

AUXILIARY OUTLET DETAIL NOTES

1. AUXILIARY CONDUIT ROUTING: ALL CONDUITS SHALL BE ROUTED TO NEAREST CABLE TRAY/ CONDUIT SLEEVE/ AUXILIARY BACXKBOARD AND SHALL BE TERMINATED WITH A SMOOTH BUSHING AND LABELED PER SPECIFICATIONS.
2. AUXILIARY CABLE ROUTING: PROVIDE CABLE PATHWAY FOR ALL NEW AUXILIARY CABLES. FURNISH AND INSTALL NEW CONDUITS, J–HOOKS, CABLE TRAY AND/ OR SLEEVES AS REQUIRED TO PROVIDE A PATHWAY TO TERMINATION LOCATION OF ALL NEW CABLES. FIRESTOP ALL NEW FIRE RATED PENETRATIONS PER SPECIFICATIONS. NO CABLE WILL BE UNSUPPORTED FOR A DISTANCE GREATER THAN 3ft. CABLE TRAY AND J–HOOKS SHALL ONLY BE PERMITTED ABOVE L.A.T. CEILING.
3. AUXILIARY OUTLETS SHALL BE MOUNTED AT HEIGHTS AS INDICATED ABOVE FINISHED FLOOR AND SHALL BE CONFIGURED AS FOLLOWS WITH DEVICE AND ICON COLORS AS DIRECTED BY ARCHITECT.

CABLES ◐ DATA/ VOIP OUTLET – FLUSH MOUNTED IN 4" SQUARE BOX WITH SINGLE GANG RAISED COVER AT +16" A.F.F. FURNISH AND INSTALL TWO EACH CAT6 CONNECTORS (LEVITON# 61110–R*6) WITH DATA ICONS FOR EACH JACK AS INDICATED, ONE EACH FACEPLATE (LEVITON# 43080–1L* WITH PORT CAPACITY AS REQUIRED TO PROVIDE ONE FUTURE PORT) WITH ONE EACH BLANK (LEVITON# 41084–B*B). FURNISH AND INSTALL TWO EACH CAT6 CABLES FROM OUTLET TO SPECIFIED BACKBOARD VIA CONDUIT, J–HOOKS, SLEEVES AND/ OR CABLE TRAY AND CONNECT TO LAN AS REQUIRED. ALL CABLES SHALL BE TERMINATED, BOTH ENDS, PER SPECIFICATIONS. PROVIDE 10FT SERVICE LOOP ABOVE CEILING AT WORK AREA OUTLET AND AT IDF/ COMM ROOM.

TV WALL DISPLAY OUTLET – FLUSH MOUNTED IN 4" SQUARE BOX WITH SINGLE GANG RAISED COVER AT +60" A.F.F. FURNISH AND INSTALL ONE EACH "F" CONNECTOR AND TWO EACH CAT6 CONNECTORS (LEVITON# 61110–R*6) WITH DATA ICONS FOR EACH JACK AS INDICATED, ONE EACH FACEPLATE (LEVITON# 43080–1L* WITH PORT CAPACITY AS REQUIRED TO PROVIDE ONE FUTURE PORT) WITH ONE EACH BLANK (LEVITON# 41084–B*B). FURNISH AND INSTALL TWO EACH CAT6 CABLES AND ONE EACH RG6 CABLE FROM OUTLET TO AUXILIARY BACKBOARD VIA CONDUIT/ CABLE TRAY AND SLEEVES, ALL CABLES SHALL BE TERMINATED, BOTH ENDS, PER SPECIFICATIONS. PROVIDE 10FT SERVICE LOOP ABOVE CEILING AT OUTLET AND AT AUXILIARY BACKBOARD.

WAP WIRELESS ACCESS POINT OUTLET – FLUSH MOUNTED IN 4" SQUARE BOX IN CEILING. FURNISH AND INSTALL TWO EACH CAT6 CONNECTORS (LEVITON# 61110–R*6) TERMINATED ABOVE CEILING. FURNISH AND INSTALL TWO EACH CAT6 CABLES FROM OUTLET TO SPECIFIED BACKBOARD VIA CONDUIT, J–HOOKS, SLEEVES AND/ OR CABLE TRAY AND CONNECT TO EXISTING LAN AS REQUIRED. ALL CABLES SHALL BE TERMINATED, BOTH ENDS, AS DIRECTED BY OWNER. PROVIDE 10FT SERVICE LOOP ABOVE CEILING AT WAP AND AT AUXILIARY BACKBOARD. WAP TO BE FURNISHED AND INSTALLED BY OTHERS (N.I.C.).

VD VIDEO DISPLAY OUTLET – FLUSH MOUNTED IN 4" SQUARE BOX WITH SINGLE GANG RAISED COVER AT +60" A.F.F. FURNISH AND INSTALL TWO EACH CAT6 CONNECTORS (LEVITON# 61110–R*6) WITH DATA ICONS FOR EACH JACK AS INDICATED, ONE EACH FACEPLATE (LEVITON# 43080–1L* WITH PORT CAPACITY AS REQUIRED TO PROVIDE ONE FUTURE PORT) WITH ONE EACH BLANK (LEVITON# 41084–B*B). FURNISH AND INSTALL TWO EACH CAT6 CABLES FROM OUTLET TO AUXILIARY BACKBOARD VIA CONDUIT/ CABLE TRAY AND SLEEVES, ALL CABLES SHALL BE TERMINATED, BOTH ENDS, PER SPECIFICATIONS. PROVIDE 10FT SERVICE LOOP ABOVE CEILING AT OUTLET AND AT AUXILIARY BACKBOARD.

EE Group Inc.
gadsden alabama
TEL: (256)413-7717
FAX: (256)413-7789
WEB: WWW.EEGRPINC.COM
Job No. 4712

ALABAMA LICENSED PROFESSIONAL ENGINEER
No. 21242
11/15/2021
JACK R. MORGAN JR.

THOMAS M. McELRATH, ARCHITECT
ARCHITECTURE and SPACE PLANNING
717 MERIT SPRINGS ROAD
GADSDEN, ALABAMA 35901
PHONE: (256) 490-8244
EMAIL: TOM@TMM-ARCHITECT.COM

A NEW FIRE STATION NO. 1
located at
3170 Highway 77
for the
City of Southside, Alabama

ELECTRICAL DETAILS

DRAWN	JRM
CHECKED	JRM
SCALE	AS NOTED
DATE	NOVEMBER 15, 2021
FILE	
JOB NO.	21–01
REVISIONS	REVISED 6–13–21

SHEET E0.6 OF 12 SHEETS

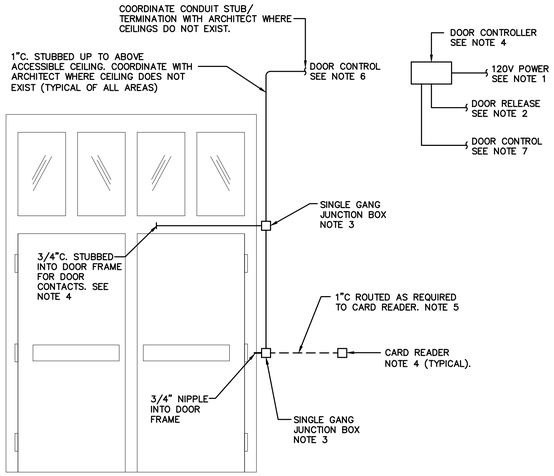

DOOR ROUGH-IN DETAIL

SCALE: NOT TO SCALE

DOOR ROUGH-IN DETAIL NOTES:

1. CONNECT TO UNSWITCHED 120V CIRCUIT AS SHOWN/REQUIRED. FURNISH AND INSTALL CONTROL POWER TRANSFORMER AS REQUIRED.
2. CONNECT EACH INDIVIDUAL DOOR CONTROLLER/ HARDWARE SET TO FIRE ALARM SYSTEM AS REQUIRED FOR DOOR RELEASE IN A FIRE ALARM PUBLIC NOTIFICATION EVENT.
3. ALL CONDUIT TO BE CONCEALED UNLESS NOTED OTHERWISE. DOOR FRAME MAY BE USED AS CABLE PATHWAY WHERE POSSIBLE. COORDINATE WITH DOOR FRAME PROVIDER, APPROVED SUBMITTALS AND SECURITY CONTRACTOR.
4. SECURITY PERIPHERALS, DOOR HARDWARE, LOW-VOLTAGE CABLING AND CONDUCTORS TO BE FURNISHED AND INSTALLED BY OTHERS. RACEWAY FOR THE ABOVE SHALL BE FURNISHED AND INSTALLED BY ELECTRICAL CONTRACTOR. COORDINATE WITH DOOR HARDWARE CONTRACTOR AND SECURITY CONTRACTOR FOR ALL REQUIRED 120V CONNECTIONS. ELECTRICAL CONTRACTOR SHALL INCLUDE IN BID PRICE ANY/ ALL 120V CONNECTIONS FOR DOOR HARDWARE AND SECURITY PERIPHERALS AS REQUIRED FOR PROPER OPERATION.
5. CARD READER MAY BE INTEGRAL WITH DOOR HARDWARE OR MAY BE MOUNTED IN DOOR FRAME. COORDINATE WITH DOOR HARDWARE CONTRACTOR AND SECURITY CONTRACTOR PRIOR TO ANY ROUGHING.
6. ROUTE CONDUIT TO DOOR CONTROLLER OR NEAREST CABLE TRAY/ AUXILIARY BACKBOARD. COORDINATE LOCATION OF DOOR CONTROLLER WITH DOOR HARDWARE CONTRACTOR AND SECURITY CONTRACTOR PRIOR TO ANY ROUGHING.
7. ROUTE CONDUIT TO NEAREST CABLE TRAY/ AUXILIARY BACKBOARD AND TERMINATE WITH SMOOTH

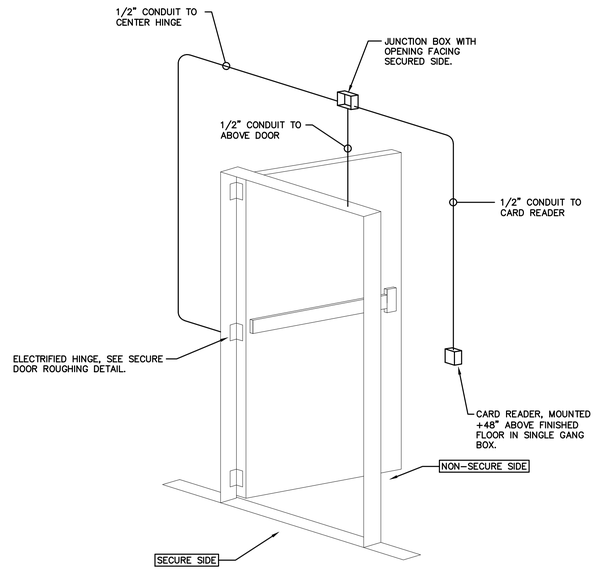

CARD READER SECURE DOOR (SINGLE)

NOT TO SCALE

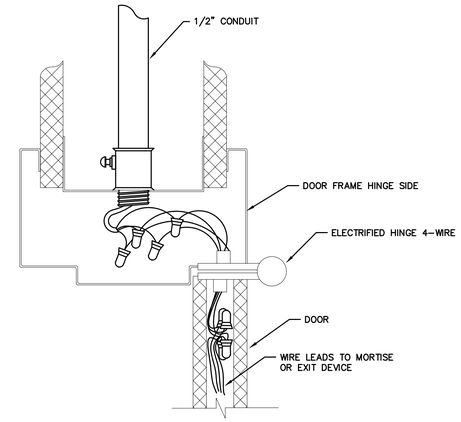

SECURE DOOR ROUGHING

NOT TO SCALE

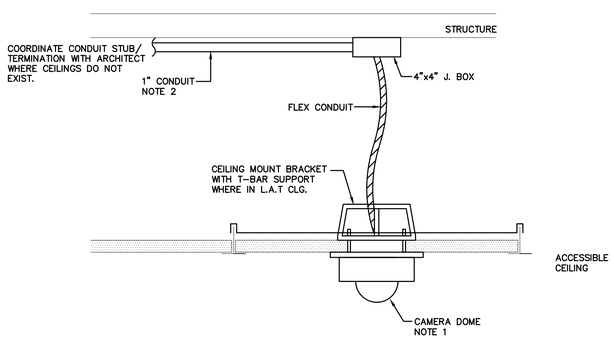

CEILING MOUNTED CAMERA ROUGHING

NOT-TO-SCALE

DETAIL NOTES:

1. CAMERA TO BE FURNISHED AND INSTALLED BY SECURITY CONTRACTOR WITH ALL LOW-VOLTAGE (70V AND UNDER) CABLING AND CONNECTIONS TO BE FURNISHED BY SECURITY CONTRACTOR. ALL 120V CONNECTIONS SHALL BE BY ELECTRICAL CONTRACTOR WHERE REQUIRED. ELECTRICAL CONTRACTOR SHALL COORDINATE WITH SECURITY CONTRACTOR FOR ALL REQUIRED 120V CONNECTIONS AT CAMERAS. ELECTRICAL CONTRACTOR SHALL INCLUDE ALL 120V CAMERA POWER IN BID.
2. ELECTRICAL CONTRACTOR SHALL FURNISH AND INSTALL BOXES AND CONDUIT AS REQUIRED FOR SVIDEO SURVEILLANCE CAMERA ROUGHING. ROUTE CONDUIT TO NEAREST CABLE TRAY OR AUXILIARY BACKBOARD AND TERMINATE WITH SMOOTH BUSHING. LABEL ALL CONDUITS PER SPECIFICATIONS.

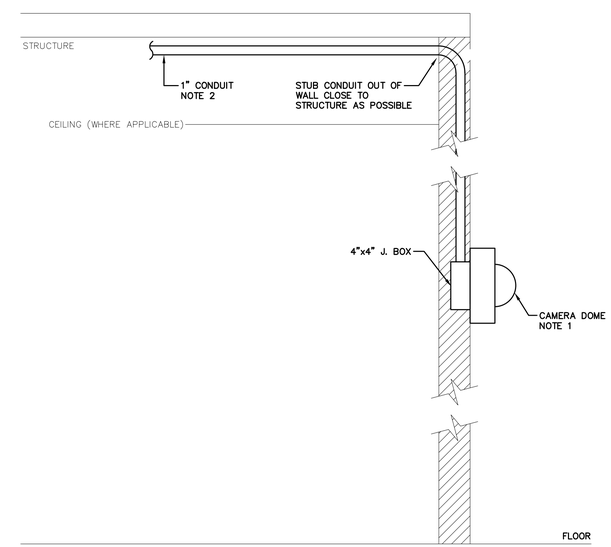

WALL MOUNTED CAMERA , EXTERIOR

NOT-TO-SCALE

DETAIL NOTES:

1. CAMERA TO BE FURNISHED AND INSTALLED BY SECURITY CONTRACTOR WITH ALL LOW-VOLTAGE (70V AND UNDER) CABLING AND CONNECTIONS TO BE FURNISHED BY SECURITY CONTRACTOR. ALL 120V CONNECTIONS SHALL BE BY ELECTRICAL CONTRACTOR WHERE REQUIRED. ELECTRICAL CONTRACTOR SHALL COORDINATE WITH SECURITY CONTRACTOR FOR ALL REQUIRED 120V CONNECTIONS AT CAMERAS. ELECTRICAL CONTRACTOR SHALL INCLUDE ALL 120V CAMERA POWER IN BID.
2. ELECTRICAL CONTRACTOR SHALL FURNISH AND INSTALL BOXES AND CONDUIT AS REQUIRED FOR SVIDEO SURVEILLANCE CAMERA ROUGHING. ROUTE CONDUIT TO NEAREST CABLE TRAY OR AUXILIARY BACKBOARD AND TERMINATE WITH SMOOTH BUSHING. LABEL ALL CONDUITS PER SPECIFICATIONS.

EE Group Inc.
gadsden alabama
TEL: (256)413-7717
FAX: (256)413-7789
WEB: WWW.EEGRPINC.COM
Job No. 4712

ALABAMA LICENSED PROFESSIONAL ENGINEER No. 21242 11/15/2021 JACK R. MORGAN JR.

THOMAS M. McELRATH, ARCHITECT
ARCHITECTURE and SPACE PLANNING
717 MERIT SPRINGS ROAD
GADSDEN, ALABAMA 35901
PHONE: (256) 490-8244
EMAIL: TOM@TMM-ARCHITECT.COM

A NEW FIRE STATION NO. 1
located at
3170 Highway 77
for the
City of Southside, Alabama

ELECTRICAL DETAILS

DRAWN	JRM
CHECKED	JRM
SCALE	AS NOTED
DATE	NOVEMBER 15, 2021
FILE	
JOB NO.	21-01
REVISIONS	REVISED 6-13-21

SHEET E0.7 OF 12 SHEETS

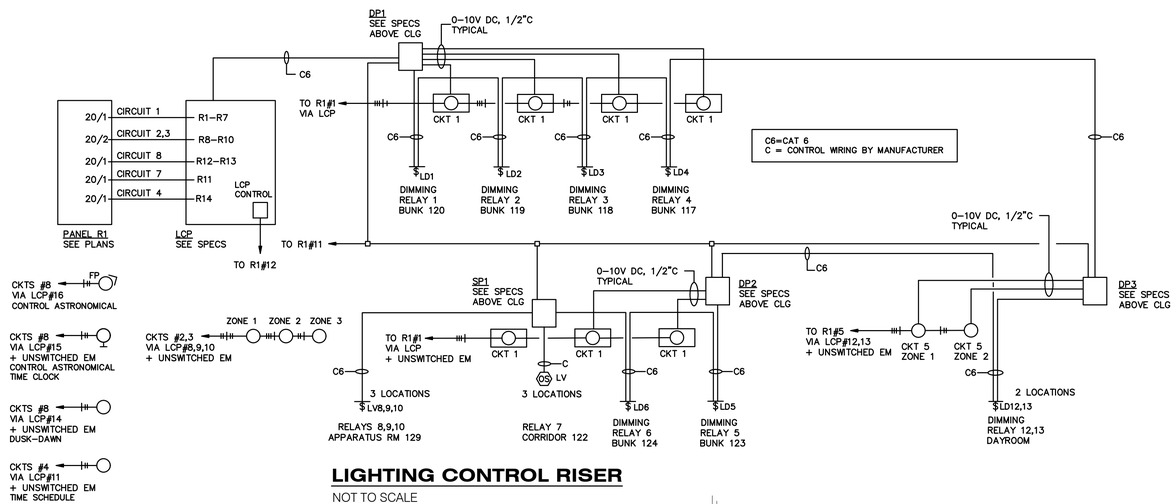

LIGHTING CONTROL RISER

NOT TO SCALE

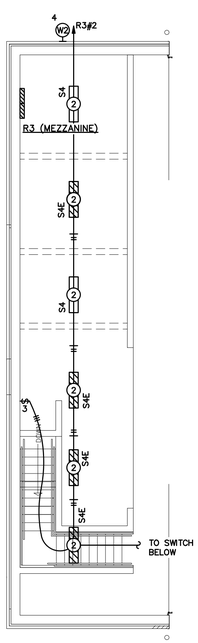

MEZZANINE PLAN - LIGHTING

SCALE: 1/8" = 1'-0"

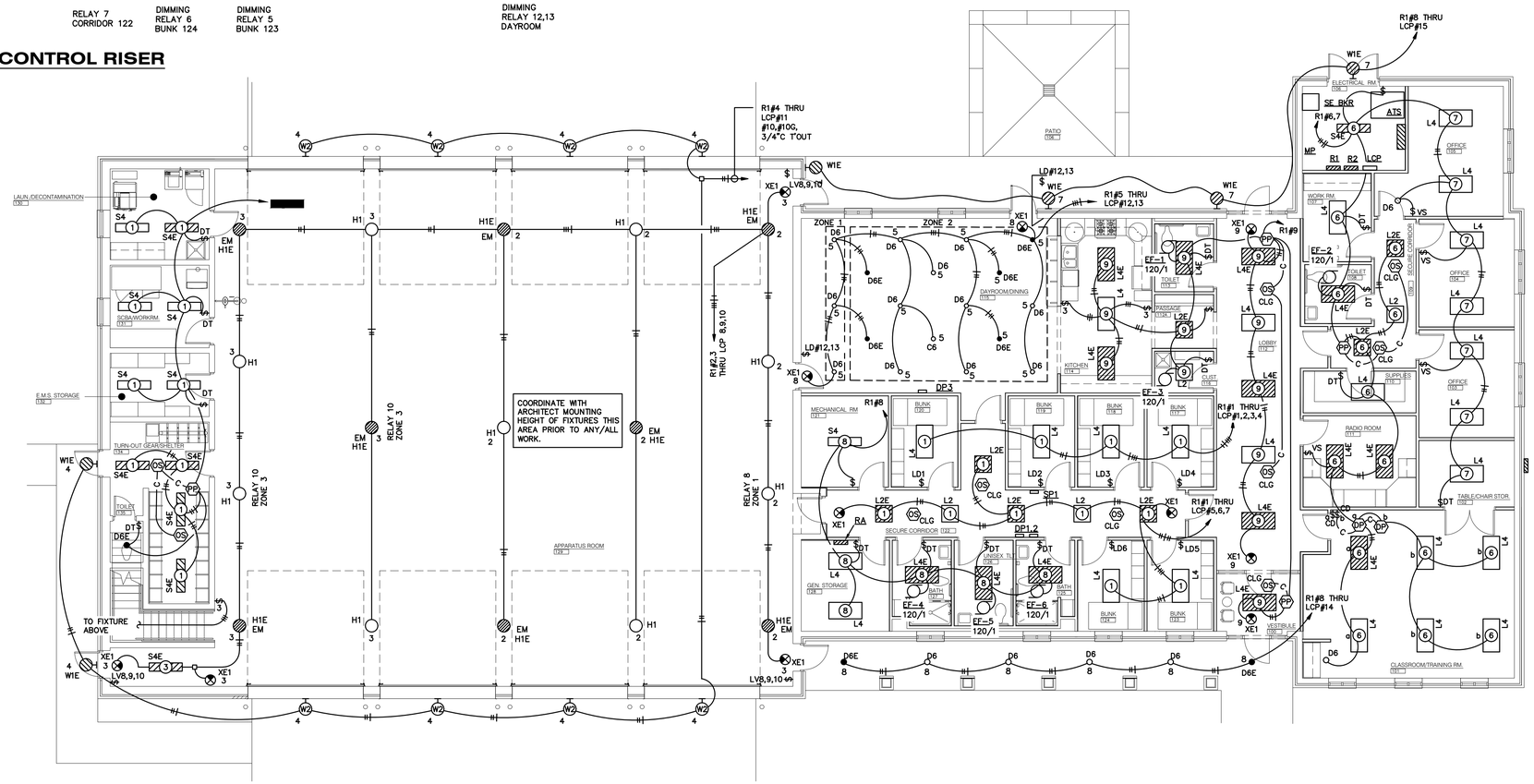

FLOOR PLAN - LIGHTING

SCALE: 1/8" = 1'-0"

EE Group Inc.
gadsden alabama
TEL: (256)413-7717
FAX: (256)413-7789
WEB: WWW.EEGRPINC.COM
Job No. 4712

ALABAMA PROFESSIONAL ENGINEER
No. 21242
11/15/2021
JACK R. MORGAN JR.

THOMAS M. McELRATH, ARCHITECT
ARCHITECTURE and SPACE PLANNING
717 MERIT SPRINGS ROAD
GADSDEN, ALABAMA 35901
PHONE: (256) 490-8244
EMAIL: TOM@TMM-ARCHITECT.COM

A NEW FIRE STATION NO. 1
located at
3170 Highway 77
for the
City of Southside, Alabama

FLOOR PLAN
LIGHTING

DRAWN	JRM
CHECKED	JRM
SCALE	AS NOTED
DATE	NOVEMBER 15, 2021
FILE	
JOB NO.	21-01
REVISIONS	REVISED 6-13-21

SHEET E1.0 OF 12 SHEETS

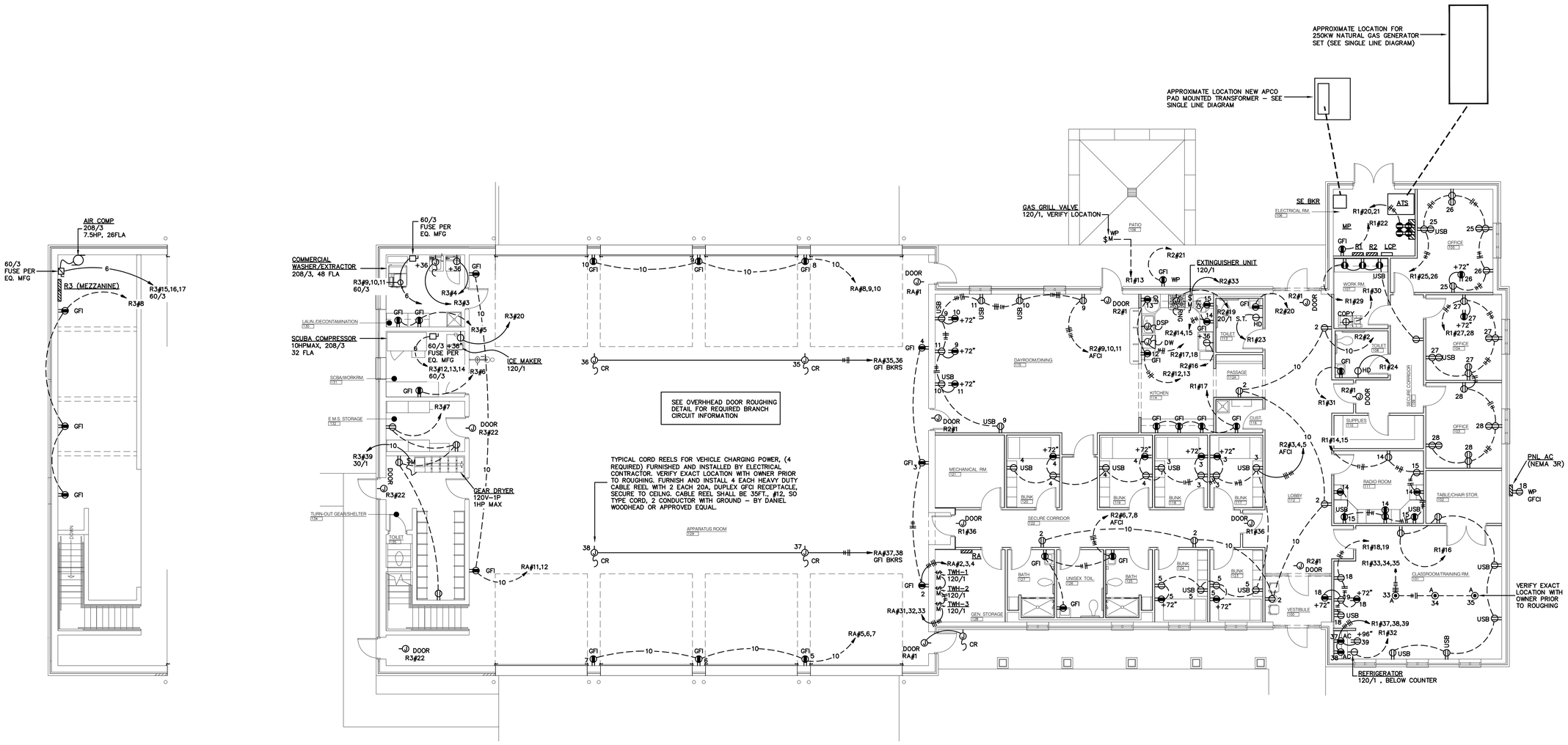

MEZZANINE PLAN - POWER

SCALE: 1/8" = 1'-0"

FLOOR PLAN - POWER

SCALE: 1/8" = 1'-0"

NOTES THIS SHEET:

1. CORD REELS TO BE ON DEDICATED CIRCUITS R1#38,39,40,41 AND CONNECT TO GFCI BREAKERS AS REQUIRED. FURNISH AND INSTALL 4 EACH HEAVY DUTY CABLE REEL WITH 2 EACH 20A, DUPLEX GFCI RECEPTACLE, SECURE TO CEILING (COORDINATE LOCATION WITH ARCHITECT PRIOR TO INSTALLATION). CABLE REEL SHALL BE 35ft., #12, SO TYPE CORD, 2 CONDUCTOR WITH GROUND – BY DANIEL WOODHEAD OR APPROVED EQUAL.

EE Group Inc.
gadsden alabama
TEL: (256)413-7717
FAX: (256)413-7789
WEB: WWW.EEGRPINC.COM
Job No. 4712

ALABAMA REGISTERED No. 21242 11/15/2021 ENGINEER JACK R. MORGAN JR.

THOMAS M. McELRATH, ARCHITECT
ARCHITECTURE and SPACE PLANNING
717 MERIT SPRINGS ROAD
GADSDEN, ALABAMA 35901
PHONE: (256) 490-8244
EMAIL: TOM@TMM-ARCHITECT.COM

A NEW FIRE STATION NO. 1
located at
3170 Highway 77
for the
City of Southside, Alabama

FLOOR PLAN - POWER

DRAWN	JRM
CHECKED	JRM
SCALE	AS NOTED
DATE	NOVEMBER 15, 2021
FILE	
JOB NO.	21–01
REVISIONS	REVISED 6–13–21

SHEET E2.0 OF 12 SHEETS

EE Group Inc.
gadsden alabama
TEL: (256)413-7717
FAX: (256)413-7789
WEB: WWW.EEGRPINC.COM
Job No. 4712

ALABAMA
JACK R. MORGAN
No. 21242
11/15/2021
ENGINEER

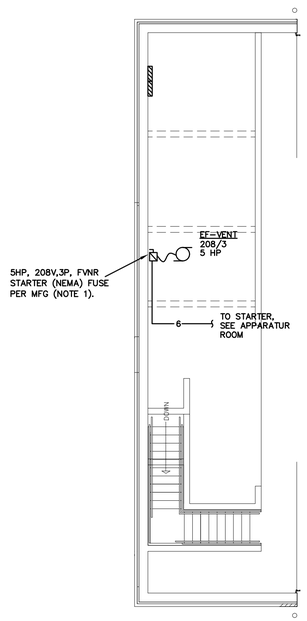

MEZZANINE PLAN
M&P EQUIPMENT CONNECTIONS

SCALE: 1/8" = 1'-0"

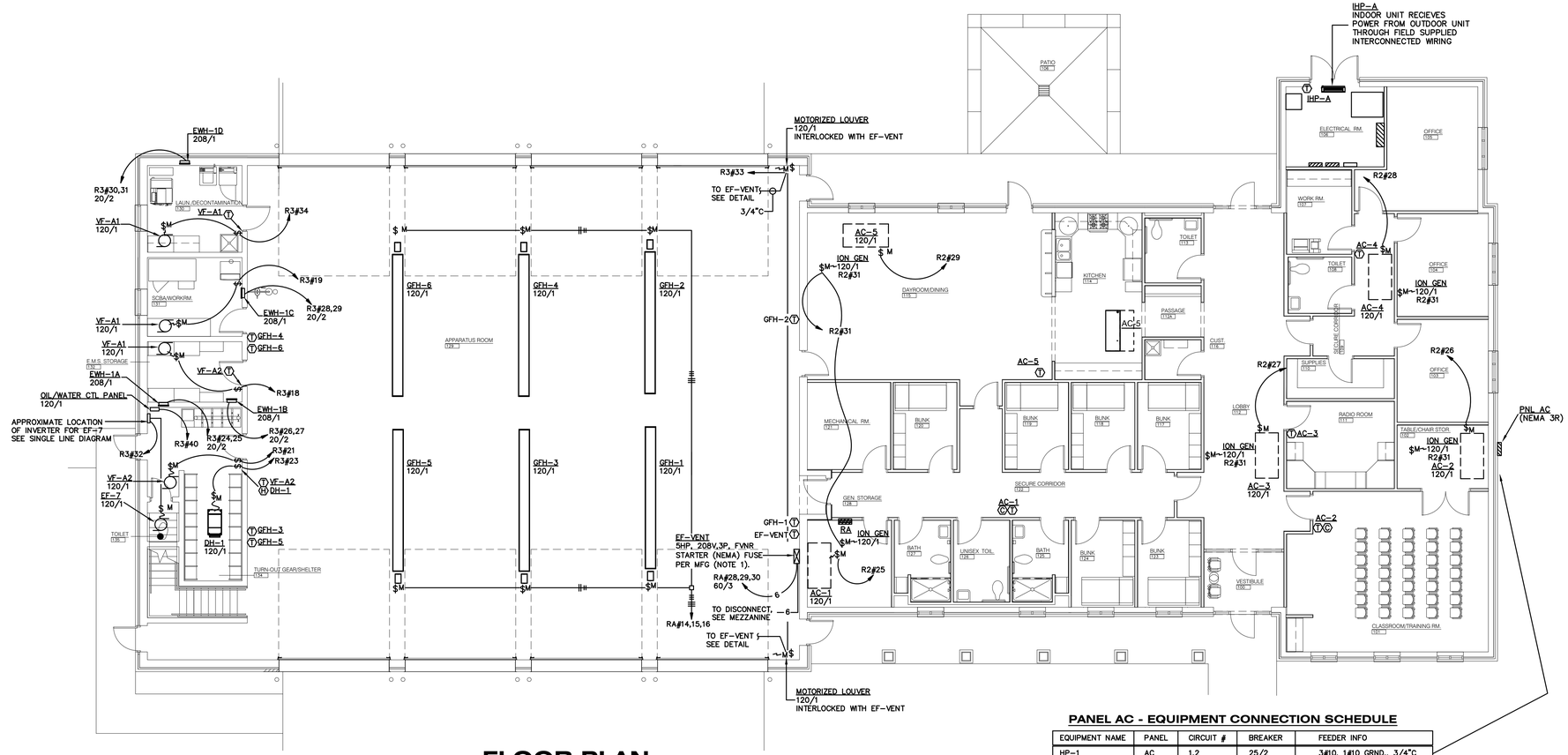

FLOOR PLAN
M&P EQUIPMENT CONNECTIONS

SCALE: 1/8" = 1'-0"

PANEL AC - EQUIPMENT CONNECTION SCHEDULE

EQUIPMENT NAME	PANEL	CIRCUIT #	BREAKER	FEEDER INFO
HP-1	AC	1,2	25/2	3#10, 1#10 GRND., 3/4"C
HP-2	AC	3,4	25/2	3#10, 1#10 GRND., 3/4"C
HP-3	AC	5,6	20/2	3#10, 1#10 GRND., 3/4"C
HP-4	AC	7,8	20/2	3#10, 1#10 GRND., 3/4"C
HP-5	AC	9,10	25/2	3#10, 1#10 GRND., 3/4"C
OHP-A	AC	11,12	30/2	3#10, 1#10 GRND., 3/4"C

NOTES THIS SHEET:

1. PROVIDE AND INSTALL NEMA RATED, COMBINATION FUSIBLE SAFETY SWITCH AND FVNR STARTER WITH OVERLOAD PROTECTION, CONTROL POWER TRANSFORMER, HOA SWITCH AND AUXILIARY CONTACTS. PROVIDE AND INSTALL BOXES, CONDUITS AND WIRING TO CONTROL TWO DEVICES (24V TSTAT AND LV SWITCH) SUCH THAT FAN OPERATES WHEN CALLED FOR BY EITHER. PROVIDE AND INSTALL REQUIRED CONNECTIONS TO LOUVER CONTROL RELAY AND CONNECT SUCH THAT LOUVER OPENS WHEN FAN IS RUNNING. COORDINATE WITH MECHANICAL ENGINEER FOR ANY REQUIRED TIME DELAY RELAYS TO ALLOW PROPER LOUVER OPERATION.

THOMAS M. McELRATH, ARCHITECT
ARCHITECTURE and SPACE PLANNING
717 MERIT SPRINGS ROAD
GADSDEN, ALABAMA 35901
PHONE: (256) 490-8244
EMAIL: TOM@TMM-ARCHITECT.COM

A NEW FIRE STATION NO. 1
located at
3170 Highway 77
for the
City of Southside, Alabama

ELECTRICAL M&P CONNECTIONS FLOOR PLAN

DRAWN	JRM
CHECKED	JRM
SCALE	AS NOTED
DATE	NOVEMBER 15, 2021
FILE	
JOB NO.	21-01
REVISIONS	REVISED 6-13-21

SHEET E3.0 OF 12 SHEETS

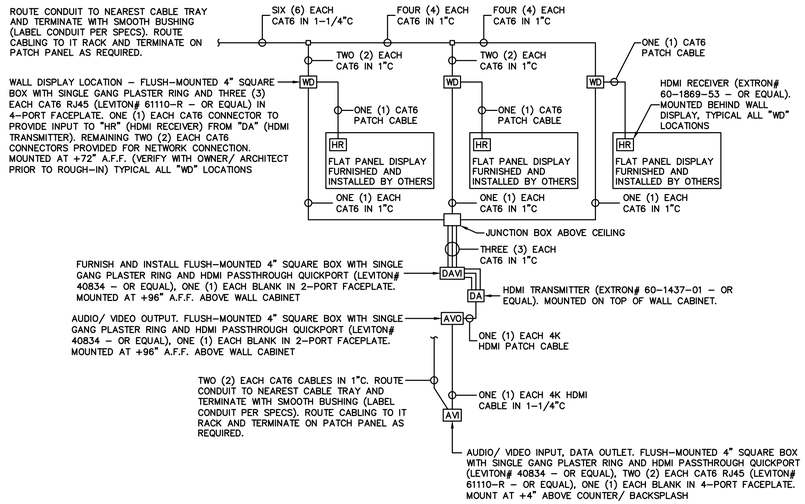

AV BLOCK DIAGRAM CLASSROOM/ TRAINING 101

SCALE: NOT - TO - SCALE

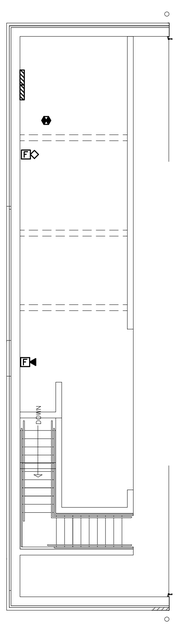

MEZZANINE PLAN - AUXILIARY

SCALE: 1/8" = 1'-0"

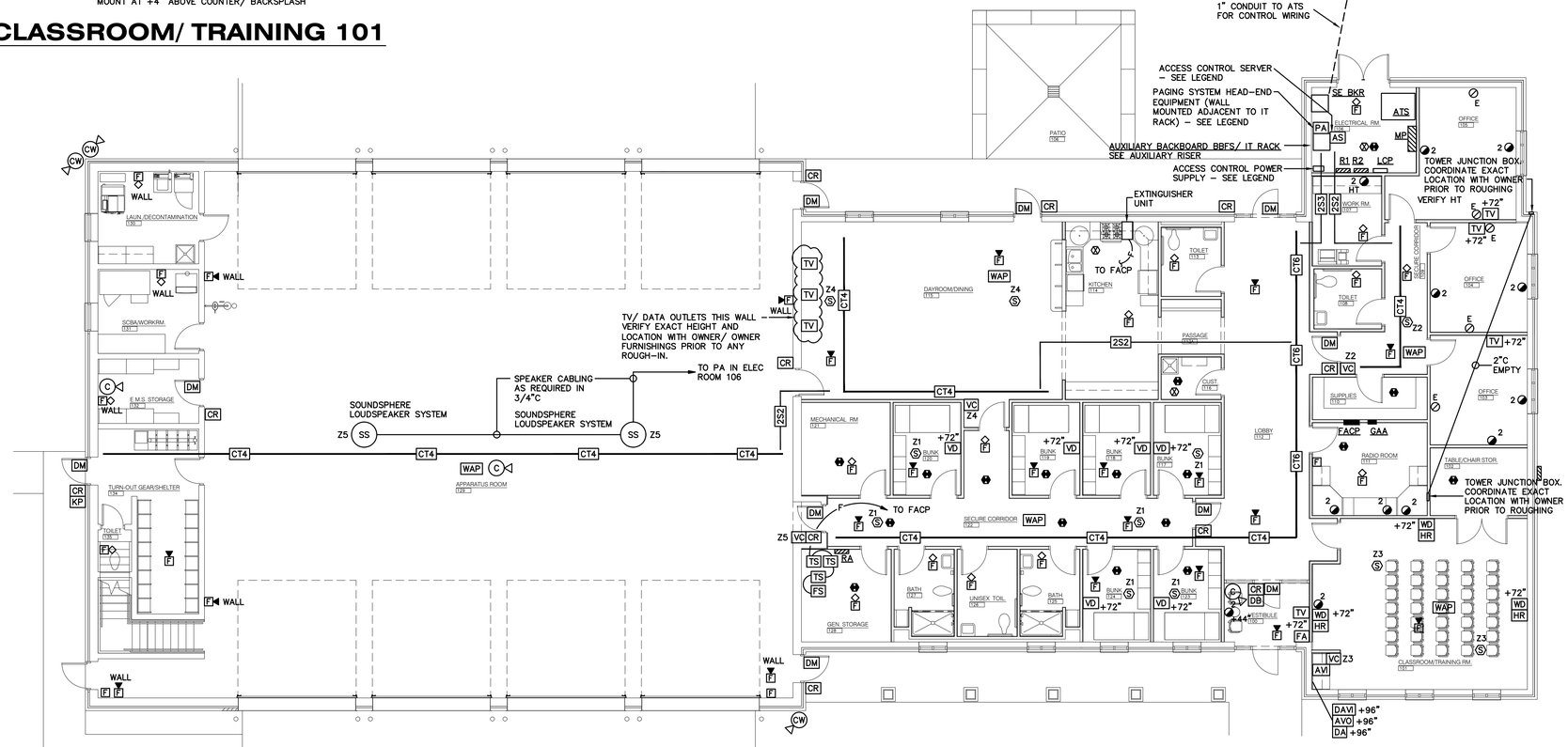

FLOOR PLAN - AUXILIARY

SCALE: 1/8" = 1'-0"

EE Group Inc.
gadsden alabama
TEL: (256)413-7717
FAX: (256)413-7789
WEB: WWW.EEGRPINC.COM
Job No. 4712

ALABAMA LICENSED PROFESSIONAL ENGINEER No. 21242 11/15/2021 JACK R. MORGAN JR.

THOMAS M. McELRATH, ARCHITECT
ARCHITECTURE and SPACE PLANNING
717 MERIT SPRINGS ROAD
GADSDEN, ALABAMA 35901
PHONE: (256) 490-8244
EMAIL: TOM@TMM-ARCHITECT.COM

A NEW FIRE STATION NO. 1
located at
3170 Highway 77
for the
City of Southside, Alabama

FLOOR PLAN AUXILIARY

DRAWN	JRM
CHECKED	JRM
SCALE	AS NOTED
DATE	NOVEMBER 15, 2021
FILE	
JOB NO.	21-01
REVISIONS	REVISED 6-13-21

SHEET E4.0 OF 12 SHEETS

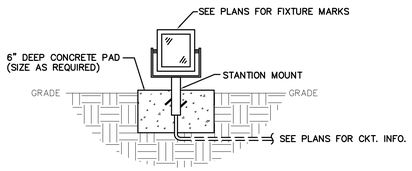

FLAG POLE FLOOD LIGHTING

NOT TO SCALE (FIXTURE FP)

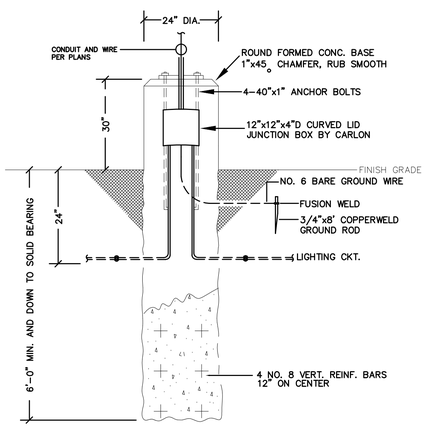

PARKING AREA POLE BASE

NOT TO SCALE (PL1)

DETAIL NOTES:

1. 3500 PSI MINIMUM 28 DAY COMPRESSIVE STRENGTH CONCRETE WITH GRADE 60 RE-BARS.
2. IF WATER IS PRESENT IN HOLE, REMOVE BEFORE POURING CONCRETE.
3. FOUNDATION EXCAVATION SHALL BE BY 24" AUGAR IN UNDISTURBED OR PROPERLY COMPACTED FILL.
4. MINIMUM ALLOWABLE SOIL BEARING PRESSURE 3000 PSF. NOTIFY ENGINEER IF BEARING PRESSURE IS LESS.

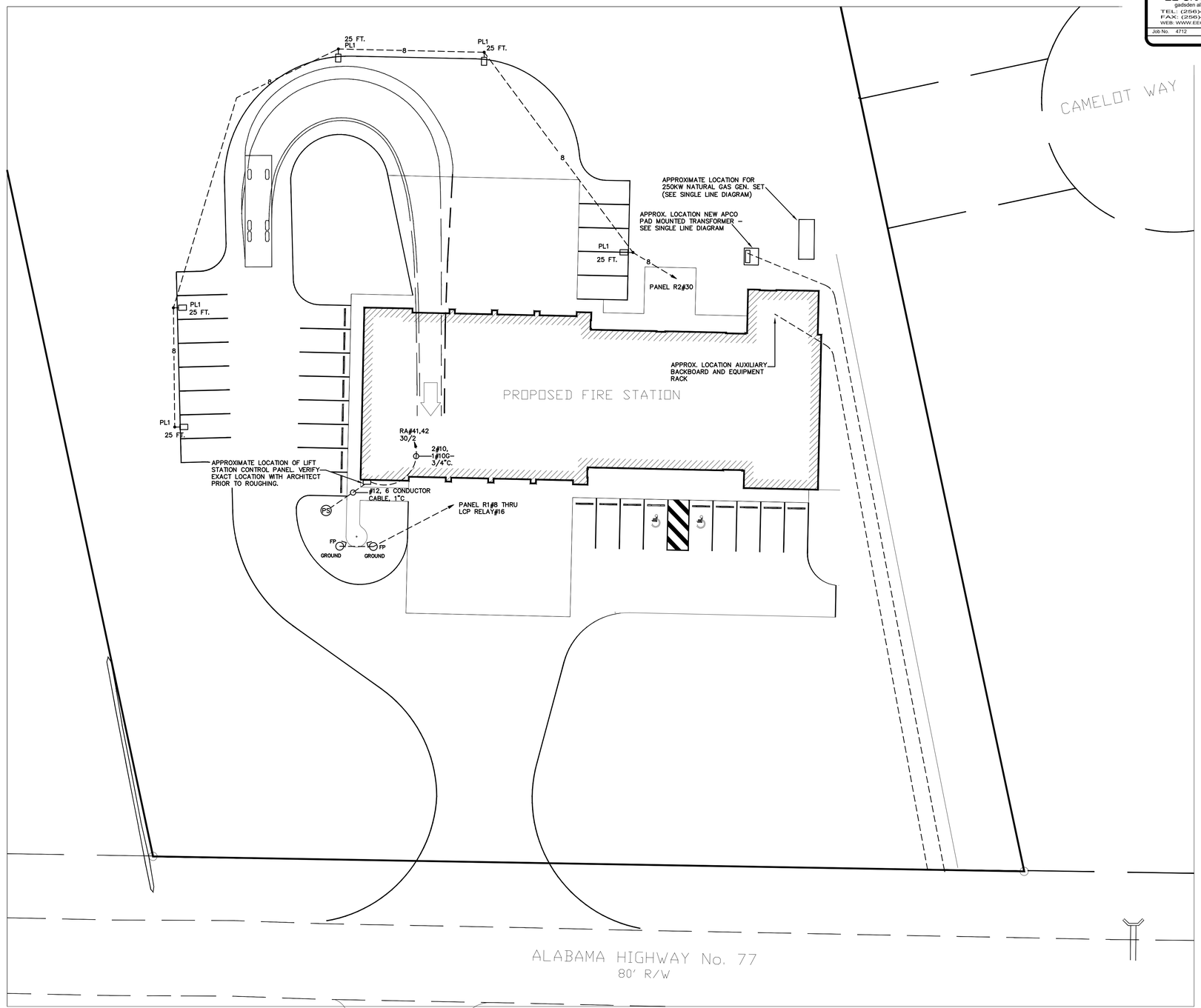

ELECTRICAL SITE PLAN

SCALE: 1" = 20'-0"

EE Group Inc.
gadsden alabama
TEL: (256)413-7717
FAX: (256)413-7789
WEB: WWW.EEGRPINC.COM
Job No. 4712

ALABAMA LICENSED PROFESSIONAL ENGINEER No. 21242 JACK R. MORGAN JR. 11/15/2021

THOMAS M. McELRATH, ARCHITECT
ARCHITECTURE and SPACE PLANNING
717 MERIT SPRINGS ROAD
GADSDEN, ALABAMA 35901
PHONE: (256) 490-8244
EMAIL: TOM@TMM-ARCHITECT.COM

A NEW FIRE STATION NO. 1
located at
3170 Highway 77
for the
City of Southside, Alabama

SITE PLAN
ELECTRICAL

DRAWN	JRM
CHECKED	JRM
SCALE	AS NOTED
DATE	NOVEMBER 15, 2021
FILE	
JOB NO.	21-01
REVISIONS	REVISED 6-13-21

SHEET E5.0 OF 12 SHEETS