MADISON COUNTY SCHOOLS

CAREER TECH CENTER MACHINE SHOP

NOLA | VANPEURSEM ARCHITECTS PROJECT NUMBER 22256
DIVISION OF CONSTRUCTION MANAGEMENT NUMBER 2022152

VICINITY MAP

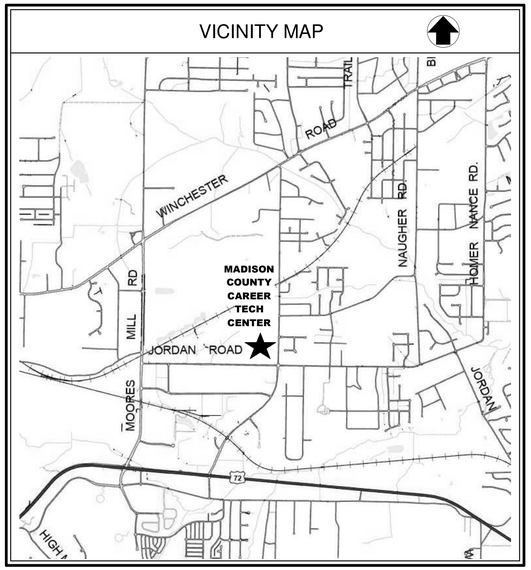

MADISON COUNTY SCHOOLS BOARD OF EDUCATION

NATHAN CURRY

ANGIE BATES

BRIAN BROOKS

DAVE WEIS

SHERE RUCKER

ALLEN PERKINS
SUPERINTENDENT

NOLA VANPEURSEM
ARCHITECTS, PC
MEMBER OF THE AMERICAN INSTITUTE OF ARCHITECTS
301 JEFFERSON STREET
HUNTSVILLE, ALABAMA 35801
(256) 533-6617
NVPARCHITECTS.COM

MADISON COUNTY SCHOOLS

CAREER TECH CENTER
MACHINE SHOP

1275 JORDAN ROAD
HUNTSVILLE, ALABAMA 35811

INDEX OF DRAWINGS

CIVIL

C100 LIMITED TOPOGRAPHIC SURVEY
C201 DEMOLITION PLAN
C301 DETAILED DIMENSION PLAN
C401 DETAILED GRADING AND DRAINAGE PLAN
C501 EROSION CONTROL PLAN
C601 SANITARY SEWER PLAN
C602 SANITARY SEWER PROFILE
C603 WATER DISTRIBUTION PLAN
C604 DETAILED UTILITY PLAN
C701 CONSTRUCTION DETAILS
C702 CONSTRUCTION DETAILS
C703 CONSTRUCTION DETAILS
C704 CONSTRUCTION DETAILS

ARCHITECTURAL

A-1.1 FIRST FLOOR PLAN
A-1.2 UL DETAILS
A-2.1 EXTERIOR BUILDING ELEVATIONS
A-3.1 BUILDING CROSS SECTIONS
A-4.1 ROOM FINISH SCHEDULE
A-5.1 DOOR SCHEDULE & DETAILS
A-6.1 ENLARGED RESTROOM PLANS & ELEVATIONS
A-7.1 WALL SECTIONS
A-8.1 ROOF PLAN

STRUCTURAL

S-1.0 FOUNDATION PLAN
S-2.0 GENERAL NOTES
S-2.1 TYPICAL DETAILS
S-2.2 SPECIAL INSPECTIONS
S-3.0 FOUNDATION SECTIONS

PLUMBING

P101 PLUMBING FLOOR PLAN
P201 PLUMBING ENLARGED PLANS
P301 PLUMBING ISOMETRICS
P302 PLUMBING ISOMETRICS
P401 PLUMBING DETAILS

MECHANICAL

M101 MECHANICAL FLOOR PLAN
M201 MECHANICAL FLOOR PLAN
M301 MECHANICAL ISOMETRICS
M401 MECHANICAL DETAILS
M501 MECHANICAL SCHEDULES

ELECTRICAL

E-0.1 LEGEND AND NOTES
E-0.2 RISER DIAGRAM AND SCHEDULES
E-0.3 FA RISER AND DETAILS
E-1.1 FLOOR PLAN - LIGHTING
E-1.2 FLOOR PLAN - POWER AND AUXILIARY SYSTEMS

ARCHITECT	CIVIL	STRUCTURAL	MECHANICAL	ELECTRICAL
NOLA | VANPEURSEM ARCHITECTS, P.C. 301 JEFFERSON STREET HUNTSVILLE, ALABAMA 35801 (256) 533-6617 TEL	JOHNSON & ASSOCIATES 1218 CHURCH STREET HUNTSVILLE, ALABAMA 35801 (256) 533-7331 TEL	P.R. MATTHEWSON & ASSOCIATES ENGINEERS, INC. 4835 UNIVERSITY SQ. SUITE 17 HUNTSVILLE, ALABAMA 35816 (256) 652-6818 TEL	MECHANICAL DESIGN SERVICES, INC. 305 JEFFERSON STREET , SUITE D HUNTSVILLE, ALABAMA 35801 (256) 534-5150 TEL	HYDE ENGINEERING, INC. 1525 PERIMETER PARKWAY, SUITE 275 HUNTSVILLE, ALABAMA 35806 (256) 270-8013 TEL

07/26/2022

SET NUMBER

STATE OF ALABAMA
FRANK J. NOLA JR.
3871
REG. NO.
ROBERT VAN PEURSEM
3535
REGISTERED ARCHITECTS

G:\active jobs\Schools\Madison County Schools\Career Tech Building\Revit\MCS Career Tech Building.rvt

7/27/2022 9:28:57 AM

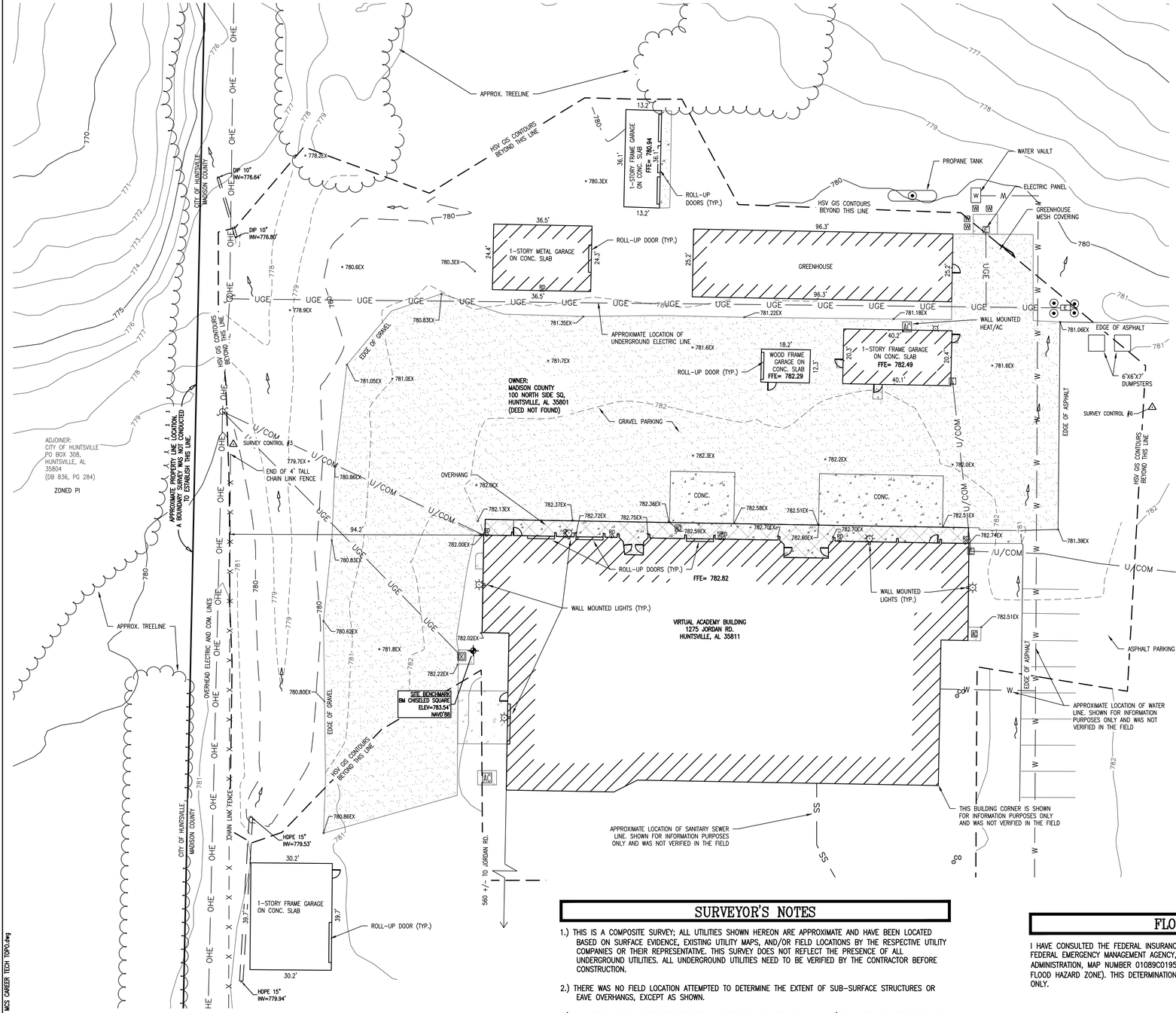

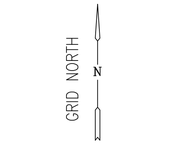

THE NORTH ARROW IS BASED ON GRID NORTH AS DEFINED BY THE STATE PLANE COORDINATE SYSTEM, ALABAMA **EAST** ZONE, NAD 1983. (DETERMINED BY GPS OBSERVATIONS)

VICINITY MAP

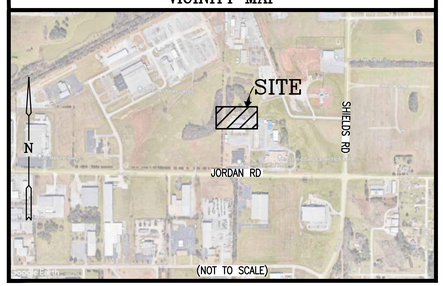

CERTIFICATE OF ACCURACY

THE ACCURACY OF THE MEASUREMENTS HAS BEEN SUBSTANTIATED BY THE COMPUTATION OF A CLOSED FIELD TRAVERSE, AND THE RELATIVE ERROR OF CLOSURE WAS NOT GREATER THAN 1:10,000.

LEGEND

FENCE LINE	—X—X—X—
EDGE OF PAVEMENT	—EP—
BACK OF CURB	—BC—
OVERHEAD ELECTRIC	—OHE—
UNDERGROUND ELECTRIC	—UGE—
SANITARY SEWER	—SS—
GAS LINE	—GAS—
CENTERLINE	—CL—
WATER LINE	—W—
FIBER OPTIC CABLE	—FOC—
COMMUNICATION	—COM—
STORM SEWER LINE	
TREE LINE	
UTILITY POLE	
LIGHT POLE	
GUY WIRE	
ELECTRICAL CABINET	E
LANDSCAPE LIGHT	
TRANSFORMER	
WATER VALVE	
WATER METER	W
IRRIGATION VALVE	
FIRE HYDRANT	
TELEPHONE RISER	
UNDERGROUND COM MARKER	
SANITARY SEWER MANHOLE	S
SANITARY CLEANOUT	
STORM SEWER MANHOLE	
OPEN THROAT INLET	
DOUBLE WING CURB INLET	
SINGLE WING CURB INLET	
GRATE INLET	
FLOW ARROW	
GAS VALVE	
STUB PIPE	
AIR CONDITIONER	AC
SIGN	
LOT NUMBER	1
REINFORCED CONC. PIPE	RCP
POLYVINYL CHLORIDE	PVC
REGULAR PARKING SPACES	10
SURVEY CONTROL PT.	
MEASURED	(M)
RECORD	(R)
DEED	(D)
PLAT	(P)
FINISH FLOOR ELEVATION	FFE
RIGHT-OF-WAY	R.O.W
BENCHMARK	
CONCRETE MONUMENT FOUND	
PROPERTY CORNER FOUND	
PROPERTY CORNER SET 1/2-INCH REBAR SET WITH YELLOW CAP STAMPED "JOHNSON CA-0193LS"	
CONIFEROUS TREE	
DECIDUOUS TREE	
EXISTING CONTOURS	795
SPOT ELEVATION	x 728.5EX
UTILITY & DRAINAGE EASEMENT	U & D
GRAVEL	
CONCRETE	
RIP-RAP	
PROPERTY LINE	

Survey Control Point Table

ALL COORDINATES ARE GIVEN IN U.S. FEET AND REFERENCED TO THE ALABAMA STATE PLANE COORDINATES, NAD'83 AND ELEVATIONS ARE RELATIVE TO NAVD'88

Point #	Northing	Easting	Elevation	Description
3	1560290.1878	448910.1658	780.33	SIRCC
6	1560303.9348	449251.2992	781.69	MAG
BM	1560213.5087	448999.2089	783.54	SIRCC

SURVEYOR'S NOTES

1.) THIS IS A COMPOSITE SURVEY; ALL UTILITIES SHOWN HEREON ARE APPROXIMATE AND HAVE BEEN LOCATED BASED ON SURFACE EVIDENCE, EXISTING UTILITY MAPS, AND/OR FIELD LOCATIONS BY THE RESPECTIVE UTILITY COMPANIES OR THEIR REPRESENTATIVE. THIS SURVEY DOES NOT REFLECT THE PRESENCE OF ALL UNDERGROUND UTILITIES. ALL UNDERGROUND UTILITIES NEED TO BE VERIFIED BY THE CONTRACTOR BEFORE CONSTRUCTION.

2.) THERE WAS NO FIELD LOCATION ATTEMPTED TO DETERMINE THE EXTENT OF SUB-SURFACE STRUCTURES OR EAVE OVERHANGS, EXCEPT AS SHOWN.

3.) NO INSTRUMENTS OF RECORD REFLECTING EASEMENTS, RIGHTS-OF WAY, AND/OR OWNERSHIP WERE FURNISHED TO THE SURVEYOR, EXCEPT AS SHOWN.

4.) VERTICAL RELIEF INFORMATION WAS OBTAINED BASED ON FIELD MEASUREMENTS AND GPS OBSERVATION DATA, USING THE NAVD 1988.

5.) THIS PARCEL WAS LOCATED IN MADISON COUNTY AT THE TIME OF THIS SURVEY AND HAS NO ZONING DISTRICTS.

6.) LAND SURVEYORS, AS LICENSED PROFESSIONALS BY THE STATE OF ALABAMA, ARE NOT EXPERTS IN THE IDENTIFICATION OF WETLANDS, CEMETERIES OR BURIAL GROUNDS, ITEMS OF HISTORICAL OR CULTURAL SIGNIFICANCE, OR THE IDENTIFICATION OF ENVIRONMENTAL HAZARDS OR HAZARDOUS WASTE; NOR HAS ANY EVIDENCE OR DOCUMENTATION OF SAID AFOREMENTIONED ITEMS BEEN PROVIDED TO THE SURVEYOR. THEREFORE EXCEPTION IS TAKEN TO ANY SUCH MATTERS WHICH MAY EXIST ON THE SUBJECT PROPERTY.

7.) THE ADDRESS OF THE PROPERTY PER COUNTY TAX RECORDS IS 300 SHIELDS RD, MADISON COUNTY, AL.

8.) THIS IS A LIMITED TOPOGRAPHIC SURVEY ONLY AND IS NOT A BOUNDARY SURVEY, ANY BOUNDARY INFORMATION SHOWN HAS NOT BEEN FIELD VERIFIED AND IS FOR INFORMATION PURPOSES ONLY.

FLOOD INFORMATION

I HAVE CONSULTED THE FEDERAL INSURANCE ADMINISTRATION FLOOD INSURANCE RATE MAPS PREPARED BY THE FEDERAL EMERGENCY MANAGEMENT AGENCY, IN COOPERATION WITH THE NATIONAL FEDERAL INSURANCE ADMINISTRATION, MAP NUMBER 01089C0195 E, DATED OCTOBER 02, 2014, LIES IN ZONE "X" (OUTSIDE ANY FLOOD HAZARD ZONE). THIS DETERMINATION HAS NOT BEEN VERIFIED WITH FIELD DATA, BUT MAP OVERLAYS ONLY.

SURVEYOR'S CERTIFICATE

I, NATHAN G. JOHNSON, A REGISTERED LAND SURVEYOR, WITH THE FIRM OF JOHNSON AND ASSOCIATES, INC., HUNTSVILLE, ALABAMA HEREBY CERTIFY THAT ALL PARTS OF THIS SURVEY AND DRAWING HAVE BEEN COMPLETED IN ACCORDANCE WITH THE CURRENT REQUIREMENTS OF THE STANDARDS OF PRACTICE FOR SURVEYING IN THE STATE OF ALABAMA AS ADOPTED BY THE ALABAMA SOCIETY OF PROFESSIONAL LAND SURVEYORS.

ACCORDING TO THIS SURVEY, UNDER MY SUPERVISION.

Nathan G. Johnson, AL PLS #16690
njohnson@jaengineering.com

ALABAMA LICENSED No. 16690 PROFESSIONAL LAND SURVEYOR NATHAN G. JOHNSON

02/23/2022

JOHNSON & ASSOCIATES
ENGINEERING SURVEYING
1218 CHURCH STREET
HUNTSVILLE, ALABAMA 35801
1-256-533-7331
FAX 1-256-533-7332

NOLA VANPEURSEM ARCHITECTS, PC
MEMBER OF THE AMERICAN INSTITUTE OF ARCHITECTS
301 JEFFERSON STREET
HUNTSVILLE, ALABAMA 35801
(256) 533-6617
NVPARCHITECTS.COM

THIS DRAWING MAY NOT BE REPRODUCED IN WHOLE OR IN PART WITHOUT THE CONSENT OF NOLA|VANPEURSEM ARCHITECTS

MADISON COUNTY SCHOOLS

CAREER TECH CENTER MACHINE SHOP

1275 JORDAN ROAD
HUNTSVILLE, ALABAMA 35811

JOB NUMBER
22256

DHD / NGJ / 07/26/2022
DRAWN - CHECKED - DATE

REVISIONS

SHEET TITLE
LIMITED TOPOGRAPHIC SURVEY

SHEET NUMBER
C100
OF
13

F:\SURVEY\1940-SR MP MCS CAREER TECH TOPO\Survey\1940-SR MP MCS CAREER TECH TOPO.dwg

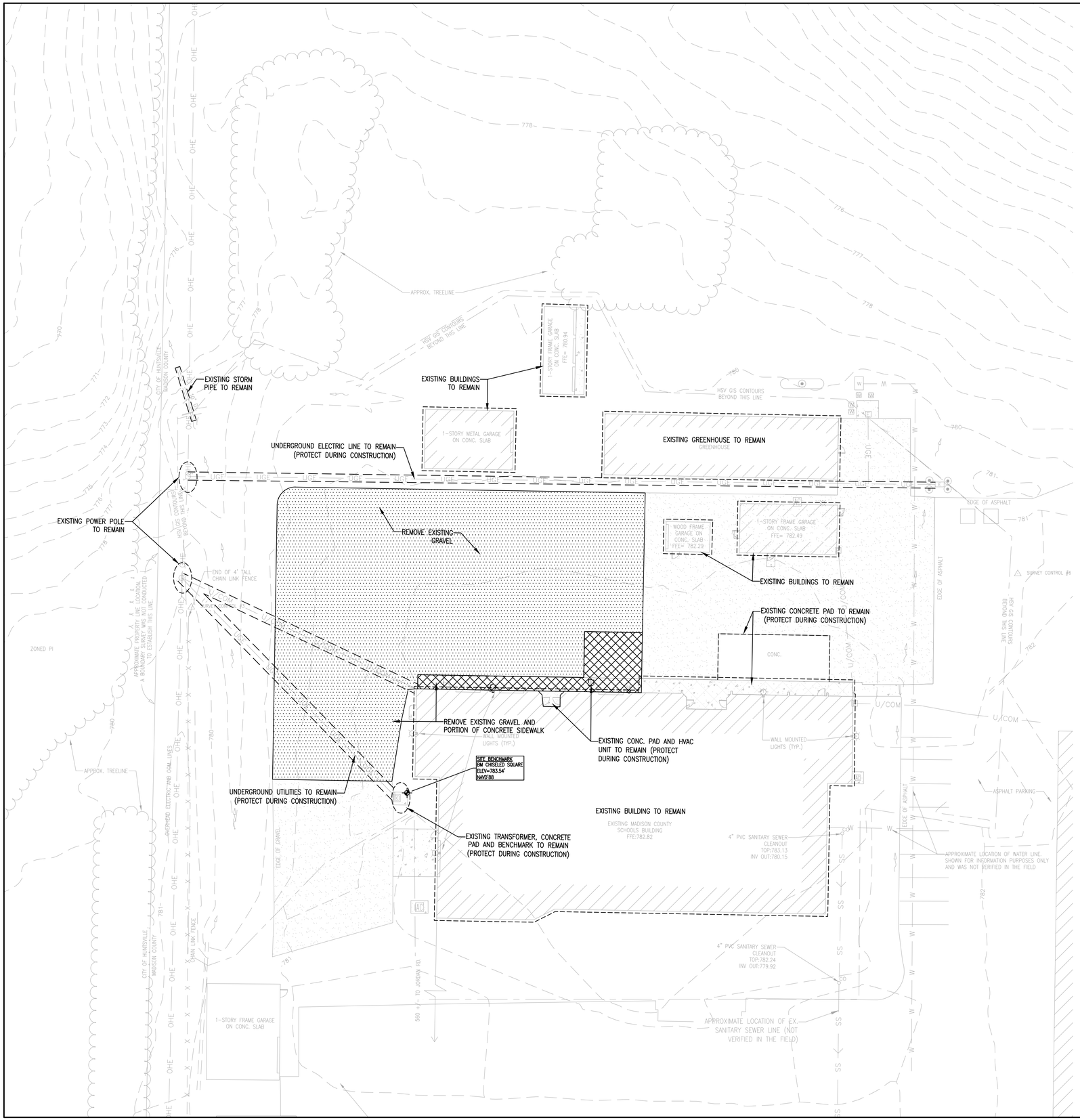

NOTES:

1. CONTRACTOR IS RESPONSIBLE FOR AND SHOULD VERIFY THE LOCATION OF ALL UNDERGROUND UTILITIES PRIOR TO CONSTRUCTION. ALL BURIED UTILITIES WERE NOT LOCATED DURING THE TOPOGRAPHIC SURVEY. UTILITIES SHOWN HEREON ARE APPROXIMATE AND MAY NOT REFLECT THE ACTUAL FIELD LOCATION OR THE PRESENCE OF OTHER UNDERGROUND UTILITIES.
2. CAUTION: CONTRACTOR SHALL EXERCISE EXTREME CAUTION WHEN WORKING ABOVE AND AROUND EXISTING UTILITIES.
3. PROTECT ALL TREES THAT ARE OUTSIDE THE WORK AREA. SOME SMALLER TREES, STUMPS, AND OTHER VEGETATION MUST BE REMOVED THAT ARE NOT OF SUFFICIENT SIZE TO LABEL INDIVIDUALLY.
4. CONTRACTOR SHALL REMOVE ALL DESIGNATED EXISTING UNDERGROUND UTILITY, STORM DRAIN & SANITARY SEWER LINES WITHIN SITE CONSTRUCTION AREA.
5. CONTRACTOR SHALL COORDINATE WITH OWNER & HUNTSVILLE UTILITIES FOR CUTOFF OF EXISTING UTILITIES AND REMOVAL OF EXISTING UTILITY & SEWER LINES, AS NECESSARY.
6. SEE DIMENSION PLAN AND COORDINATE TABLES FOR EXACT MEASUREMENTS AND COORDINATES OF REMOVAL AND CONSTRUCTION.

DEMOLITION LEGEND

- REMOVE EXISTING SIDEWALK & CONCRETE PAD
- REMOVE EXISTING BUILDING
- REMOVE EXISTING ASPHALT & GRAVEL
- PRESERVE EXISTING TREE OR FACILITY
- X X X REMOVE EXISTING CURB & GUTTER, FENCE, LINES AND PIPES

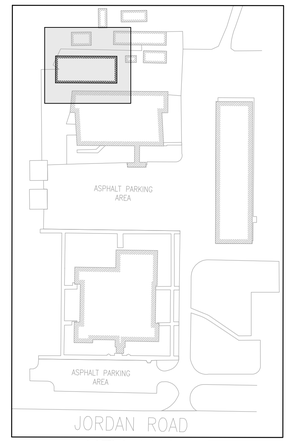

KEY MAP

N

−10 0 10 20 40

SCALE IN FEET
1" = 20'

SITE BENCHMARK:
ELEV=783.54' NAVD'88
BM CHISELED SQUARE

JOHNSON & ASSOCIATES
ENGINEERING SURVEYING
1218 CHURCH STREET
HUNTSVILLE, ALABAMA 35801
1-256-533-7331
FAX 1-256-533-7332

ALABAMA PROFESSIONAL
07/26/2022
REGISTERED
NO. 31643
ENGINEER
GIANFERMO I. REYES

NOLA VANPEURSEM
ARCHITECTS, PC
MEMBER OF THE AMERICAN INSTITUTE OF ARCHITECTS
301 JEFFERSON STREET
HUNTSVILLE, ALABAMA 35801
(256) 533-6617
NVPARCHITECTS.COM

THIS DRAWING MAY NOT BE REPRODUCED IN WHOLE OR IN PART WITHOUT THE CONSENT OF NOLA/VANPEURSEM ARCHITECTS

MADISON COUNTY SCHOOLS

CAREER TECH CENTER
MACHINE SHOP

1275 JORDAN ROAD
HUNTSVILLE, ALABAMA 35811

JOB NUMBER
22256

JSL / GIR / 07/26/2022
DRAWN - CHECKED - DATE

REVISIONS

SHEET TITLE
DEMOLITION PLAN

SHEET NUMBER
C201
OF
13

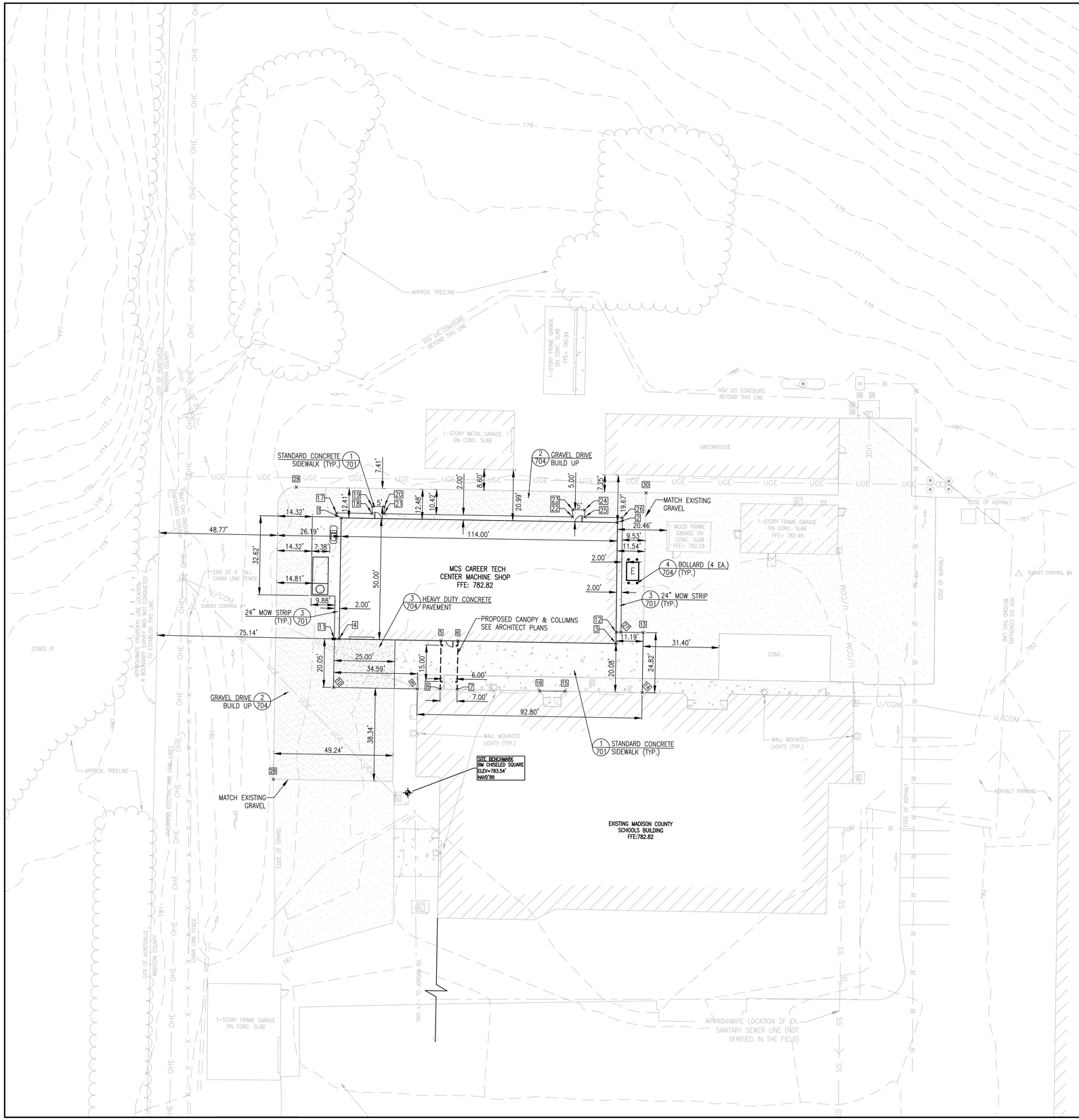

NOTES:

1. ALL DIMENSIONS ARE GIVEN TO THE BACK OF CURB UNLESS OTHERWISE SHOWN. BUILDING DIMENSIONS ARE TO FACE OF BRICK OR SIDING.
2. CONTRACTOR SHOULD VERIFY THE LOCATIONS OF ALL UNDERGROUND UTILITIES PRIOR TO CONSTRUCTION. UTILITIES SHOWN HEREON ARE APPROXIMATE AND MAY NOT REFLECT THE ACTUAL FIELD LOCATION OR THE PRESENCE OF OTHER UNDERGROUND UTILITIES.
3. ALL CONSTRUCTION TO COMPLY WITH MADISON COUNTY STANDARDS.
4. THE USE OF THE NEW BUILDING IS A CAREER TECH CENTER MACHINE SHOP.
5. THE ADDRESS FOR THIS PROPERTY IS 1275 JORDAN ROAD, HUNTSVILLE, ALABAMA 35811.
6. THE SUBJECT PROPERTY IS LOCATED IN SECTION 9, TOWNSHIP 3 SOUTH, RANGE 1 EAST, MADISON COUNTY, ALABAMA.
7. IF ADVERSE CONDITIONS ON-SITE ARE UNCOVERED DURING CONSTRUCTION, THE CITY ENGINEER AND DESIGN ENGINEER MUST BE NOTIFIED IN WRITING IMMEDIATELY. THE CITY ENGINEER AND/OR DESIGN ENGINEER MAY REQUIRE MODIFICATION OF THESE PLANS TO THE EXTENT NECESSARY TO ASSURE COMPLIANCE WITH MADISON COUNTY'S CONSTRUCTION REQUIREMENTS.
8. ALL TRAFFIC CONTROL DEVICES SHALL BE ERECTED AND MAINTAINED IN CONFORMANCE WITH THE MANUAL ON UNIFORM TRAFFIC CONTROL DEVICES AND ANY REVISIONS THEREOF.
9. ACCORDING TO GRAPHIC PLOTTING ONLY THE PROPERTY IS LOCATED IN ZONE "X" (OUTSIDE ANY FLOOD HAZARD ZONE) AS SHOWN ON THE FEDERAL INSURANCE RATE MAP COMMUNITY PANEL NO. 01089C0195 E DATED OCTOBER 2, 2014.
10. TRENCH SAFETY SYSTEMS TO MEET, AS MINIMUM, THE REQUIREMENTS OF OSHA SAFETY AND HEALTH REGULATION PART 1926.
11. SEE ARCHITECTURAL PLANS FOR ACTUAL BUILDING DIMENSIONS.
12. SIZE OF WATER AND ELECTRIC LINES ARE DEPENDENT UPON USAGE NEEDS. SEE PLUMBING PLANS FOR LOCATION OF ANY ADDITIONAL SERVICE LINES.
13. SITE CONTRACTOR IS REQUIRED TO SECURE COPIES OF ALL PROJECT MECHANICAL & ELECTRICAL PLANS.
14. EXISTING UTILITY LOCATIONS HAVE BEEN PROVIDED BY THE RESPECTIVE UTILITY ORGANIZATIONS. CONTRACTORS ARE RESPONSIBLE FOR DAMAGE TO UTILITIES. CALL UTILITY ORGANIZATIONS FOR UTILITY LOCATION BEFORE DIGGING.
15. MAINTAIN SECURITY FENCES AND GATES AS REQUIRED TO PROTECT WORK AREAS DURING CONSTRUCTION.
16. CONTRACTOR IS RESPONSIBLE FOR GRADING FOR POSITIVE DRAINAGE DURING AND AFTER CONSTRUCTION.
17. A CAD FILE CAN BE PROVIDED TO CONTRACTOR UPON REQUEST FOR STAKING AND LAYOUT PURPOSES.
18. CONTRACTOR IS TO CONTACT THE MADISON COUNTY ENGINEERING DEPARTMENT (256.746.2900) TO COORDINATE THE INSPECTION AND INSTALLATION OF STORM PIPING AND INLETS AS WELL AS SANITARY SEWER WITHIN RIGHT-OF-WAY OR UTILITY AND DRAINAGE EASEMENTS.
19. ALL DISTURBED AREAS SHALL BE SOLID SODDED.

LEGEND

○	PROPERTY COR. FOUND
●	PROPERTY COR. SET
□	CONC. MONUMENT FOUND
■	CONC. MONUMENT SET
M.B.L.	MINIMUM BLDG. LINE
U & D	UTILITY & DRAINAGE ESM'T
R.O.W.	RIGHT-OF-WAY
—℄—	CENTERLINE ROAD
—EP—	EDGE OF PAVEMENT
—OHE—	OVERHEAD ELEC.
	ELECTRIC POLE
Ⓢ	SANITARY SEWER MANHOLE
E	ELEC. RISER
T	TELE. RISER
—G—	UNDERGROUND GAS LINE
J	JUNCTION BOX
	GRATE INLET
RCP	REINFORCED CONC. PIPE
	WATER VALVE
W	WATER METER
	FIRE HYDRANT
	DRAINAGE FLOW ARROW
	TRAFFIC DIRECTION ARROW
3	STORM STRUCTURE NUMBER
—W—	UNDERGROUND WTR LINE
	CONCRETE
FFE	FINISH FLOOR ELEV.
	BENCHMARK
	SIGN
—X—X—	CHAIN LINK FENCE
	PROPOSED GUARDRAIL
	ORNAMENTAL FENCE
—UT—	UNDERGROUND TELEPHONE
—UGE—	UNDERGROUND ELECTRIC
E	ELECTRIC TRANSFORMER
	IRRIGATION VALVE
(R)	RECORD
(M)	MEASURED
FOC	FIBER OPTIC CABLE
TC	TOP OF CURB
FL	FLOWLINE
	GRAVEL PARKING

COORDINATE TABLE			
Point #	Northing	Easting	Raw Description
1	1,560,327.04	448,971.72	BUILDING CORNER
2	1,560,325.13	449,085.70	BUILDING CORNER
3	1,560,275.14	449,085.10	BUILDING CORNER
4	1,560,277.05	448,970.88	BUILDING CORNER
5	1,560,276.35	449,012.92	CANOPY
6	1,560,276.23	449,019.92	CANOPY
7	1,560,256.20	449,019.56	CANOPY
8	1,560,256.32	449,012.56	CANOPY
9	1,560,256.45	449,003.13	CONCRETE SIDEWALK
10	1,560,257.03	448,968.55	CONCRETE SIDEWALK
11	1,560,277.08	448,968.88	CONCRETE SIDEWALK
12	1,560,279.85	449,085.16	CONCRETE SIDEWALK
13	1,560,279.71	449,096.35	CONCRETE SIDEWALK
14	1,560,254.90	449,095.92	CONCRETE SIDEWALK
15	1,560,255.43	449,064.11	CONCRETE SIDEWALK
16	1,560,255.58	449,053.56	CONCRETE SIDEWALK
17	1,560,329.07	448,969.75	MOW STRIP
18	1,560,328.83	448,984.48	MOW STRIP
19	1,560,331.83	448,984.53	CONCRETE PAVEMENT
20	1,560,331.74	448,989.53	CONCRETE PAVEMENT

COORDINATE TABLE			
Point #	Northing	Easting	Raw Description
21	1,560,328.74	448,989.48	MOW STRIP
22	1,560,327.44	449,067.18	MOW STRIP
23	1,560,330.44	449,067.24	CONCRETE PAVEMENT
24	1,560,330.36	449,072.23	CONCRETE PAVEMENT
25	1,560,327.36	449,072.18	MOW STRIP
26	1,560,327.10	449,087.72	MOW STRIP
27	1,560,279.82	449,087.16	MOW STRIP
28	1,560,219.13	448,943.72	EDGE OF GRAVEL
29	1,560,339.76	448,953.22	EDGE OF GRAVEL
30	1,560,337.38	449,097.53	EDGE OF GRAVEL

N

SCALE IN FEET
1" = 20'

SITE BENCHMARK:
ELEV=783.54' NAVD'88
BM CHISELED SQUARE

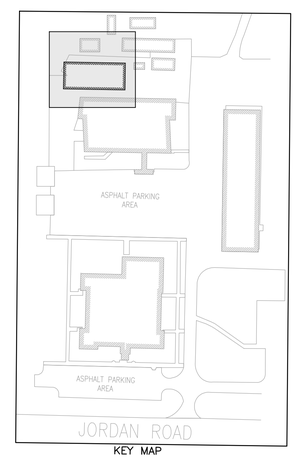

KEY MAP

JOHNSON & ASSOCIATES
ENGINEERING SURVEYING
1218 CHURCH STREET
HUNTSVILLE, ALABAMA 35801
1-256-533-7331
FAX 1-256-533-7332

ALABAMA PROFESSIONAL
07/26/2022
REGISTERED
NO. 19843
ENGINEER
VERMONT REYES

NOLA VANPEURSEM
ARCHITECTS, PC
MEMBER OF THE AMERICAN INSTITUTE OF ARCHITECTS
301 JEFFERSON STREET
HUNTSVILLE, ALABAMA 35801
(256) 533-6617
NVPARCHITECTS.COM

THIS DRAWING MAY NOT BE REPRODUCED IN WHOLE OR IN PART WITHOUT THE CONSENT OF NOLA|VANPEURSEM ARCHITECTS

MADISON COUNTY SCHOOLS

CAREER TECH CENTER MACHINE SHOP

1275 JORDAN ROAD
HUNTSVILLE, ALABAMA 35811

JOB NUMBER
22256

JSL / GIR / 07/26/2022
DRAWN - CHECKED - DATE

REVISIONS

SHEET TITLE
DETAILED DIMENSION PLAN

SHEET NUMBER
C301
OF
13

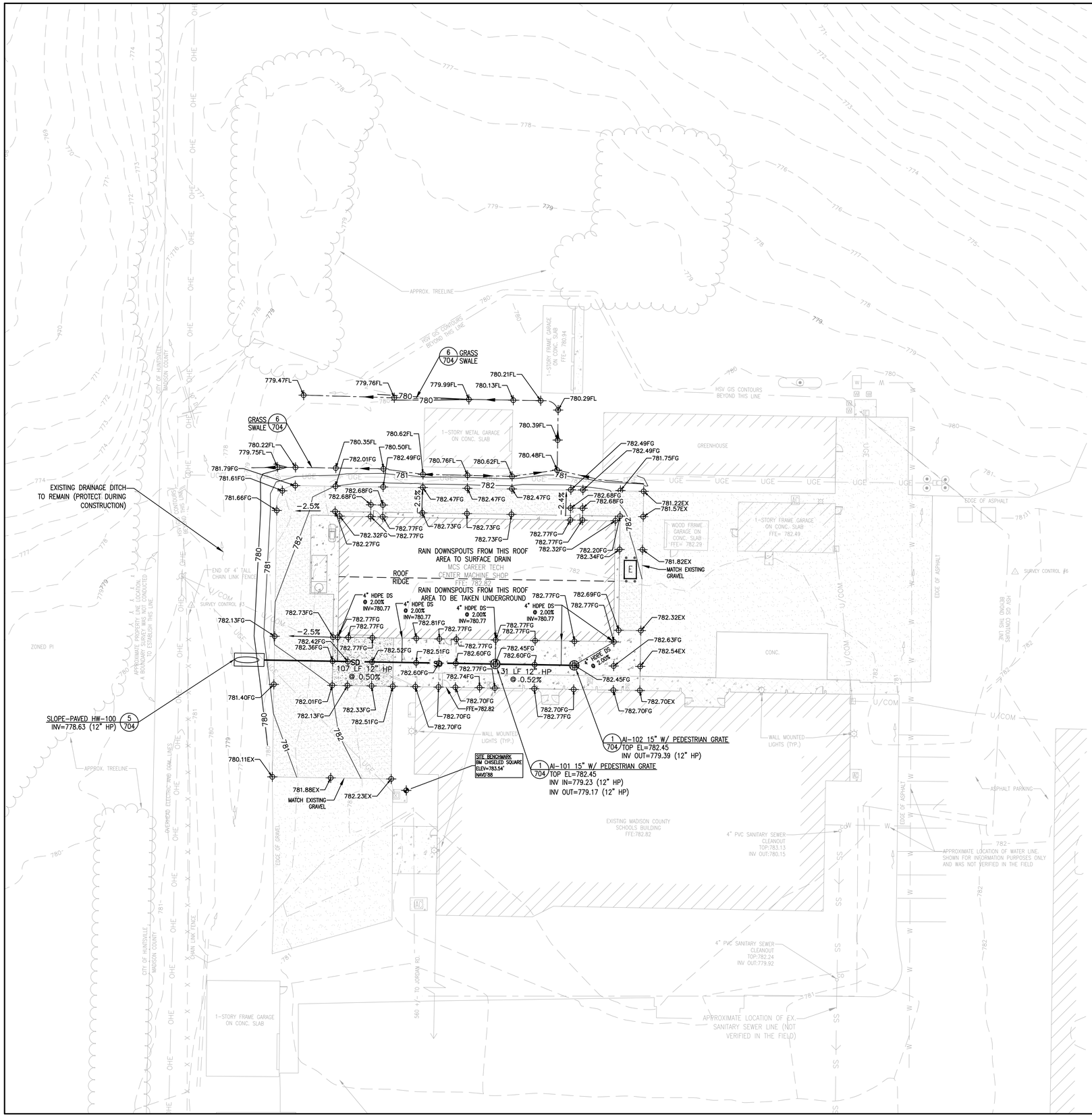

GRADING NOTES:

1. ALL EARTH FILL SHALL BE PLACED IN UNIFORM LAYERS OR LIFTS NOT EXCEEDING 6" COMPACTED THICKNESS.
2. EACH LAYER SHALL BE COMPACTED TO 95% OF MAXIMUM DENSITY. 2% +/- OF THE OPTIMUM MOISTURE (ASTM-06798).
3. EACH COMPLETED LAYER OR LIFT SHALL BE TESTED. OWNER SHALL PAY FOR TESTING. CONTRACTOR SHALL COORDINATE WITH OWNER AND ENGINEER FOR SCHEDULING TESTING.
4. SIDE SLOPES TO CONFORM TO GRADING PLAN AS APPLICABLE.
5. SITE SHALL BE GRADED SO THAT RUNOFF WILL BE DIRECTED TO THE STREETS OR TO EXISTING DRAINAGE WAYS.
6. UNSUITABLE UNDERCUT MATERIAL SHALL BE HAULED OFF SITE TO A LOCATION APPROVED BY THE ENGINEER, AS NECESSARY.
7. EXCAVATED TOPSOIL SHALL BE STOCKPILED OR USED AS FILL AND TOP DRESSING AS APPROVED BY THE ENGINEER. COORDINATE LOCATION OF STOCKPILE WITH OWNER/ARCHITECT.
8. A SUBSURFACE EXPLORATION AND GEOTECHNICAL ENGINEERING STUDY HAS BEEN PREPARED FOR THIS PROJECT. THE CONTRACTOR SHALL FOLLOW THE SITE PREPARATION RECOMMENDATIONS STIPULATED BY THE REPORT UNLESS MORE STRINGENT REQUIREMENTS ARE GIVEN ON THE PLANS OR WITHIN THE PROJECT SPECIFICATIONS.
9. ALL DITCHES, SWALES, AND DISTURBED AREAS TO BE FULLY SODDED.
10. ALL DISTURBED AREAS SHALL HAVE A FULL STAND OF GRASS PRIOR TO ISSUING A CERTIFICATE OF OCCUPANCY.
11. DEMOLISHED ITEMS ARE NOT SHOWN ON DRAWING FOR CLARITY.

LEGEND

U & D	UTILITY & DRAINAGE ESM'T
R.O.W.	RIGHT-OF-WAY
℄	CENTERLINE ROAD
EP	EDGE OF PAVEMENT
OHE	OVERHEAD ELEC.
	ELECTRIC POLE
J	JUNCTION BOX
	GRATE INLET
RCP	REINFORCED CONC. PIPE
	DRAINAGE FLOW ARROW
3	STORM STRUCTURE NUMBER
.	BENCHMARK
795	PROPOSED CONTOURS
X 728.35	SPOT ELEVATION
FL	FLOWLINE
	SINGLE WING CURB INLET (SWCI)
	DOUBLE WING CURB INLET (DWCI)
SWCI	SINGLE WING S-TYPE INLET
DWCI	DOUBLE WING S-TYPE INLET
AI	AREA INLET
JB	JUNCTION BOX
OTI	OPEN THROAT WEIR INLET
HW	SLOPED PAVED HEADWALL
EW	SLOPED PAVED ENDWALL

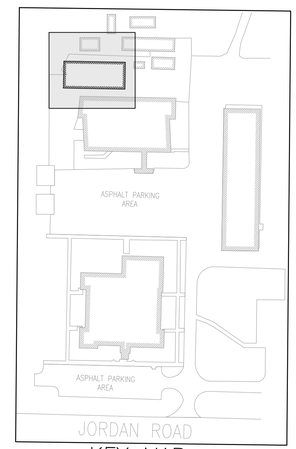

KEY MAP

N

−10 0 10 20 40
SCALE IN FEET
1" = 20'

SITE BENCHMARK:
ELEV=783.54' NAVD'88
BM CHISELED SQUARE

JOHNSON & ASSOCIATES
ENGINEERING SURVEYING
1218 CHURCH STREET
HUNTSVILLE, ALABAMA 35801
1-256-533-7331
FAX 1-256-533-7332

AL ALABAMA PROFESSIONAL
07/26/2022
REGISTERED
No. 19841
ENGINEER
THERMO L. REYES

NOLA VANPEURSEM
ARCHITECTS, PC
MEMBER OF THE AMERICAN INSTITUTE OF ARCHITECTS
301 JEFFERSON STREET
HUNTSVILLE, ALABAMA 35801
(256) 533-6617
NVPARCHITECTS.COM

THIS DRAWING MAY NOT BE REPRODUCED IN WHOLE OR IN PART WITHOUT THE CONSENT OF NOLA|VANPEURSEM ARCHITECTS

MADISON COUNTY SCHOOLS

CAREER TECH CENTER MACHINE SHOP

1275 JORDAN ROAD
HUNTSVILLE, ALABAMA 35811

JOB NUMBER
22256

JSL	GIR	07/26/2022
DRAWN	CHECKED	DATE

REVISIONS

SHEET TITLE
DETAILED GRADING & DRAINAGE PLAN

SHEET NUMBER
C401
OF
13

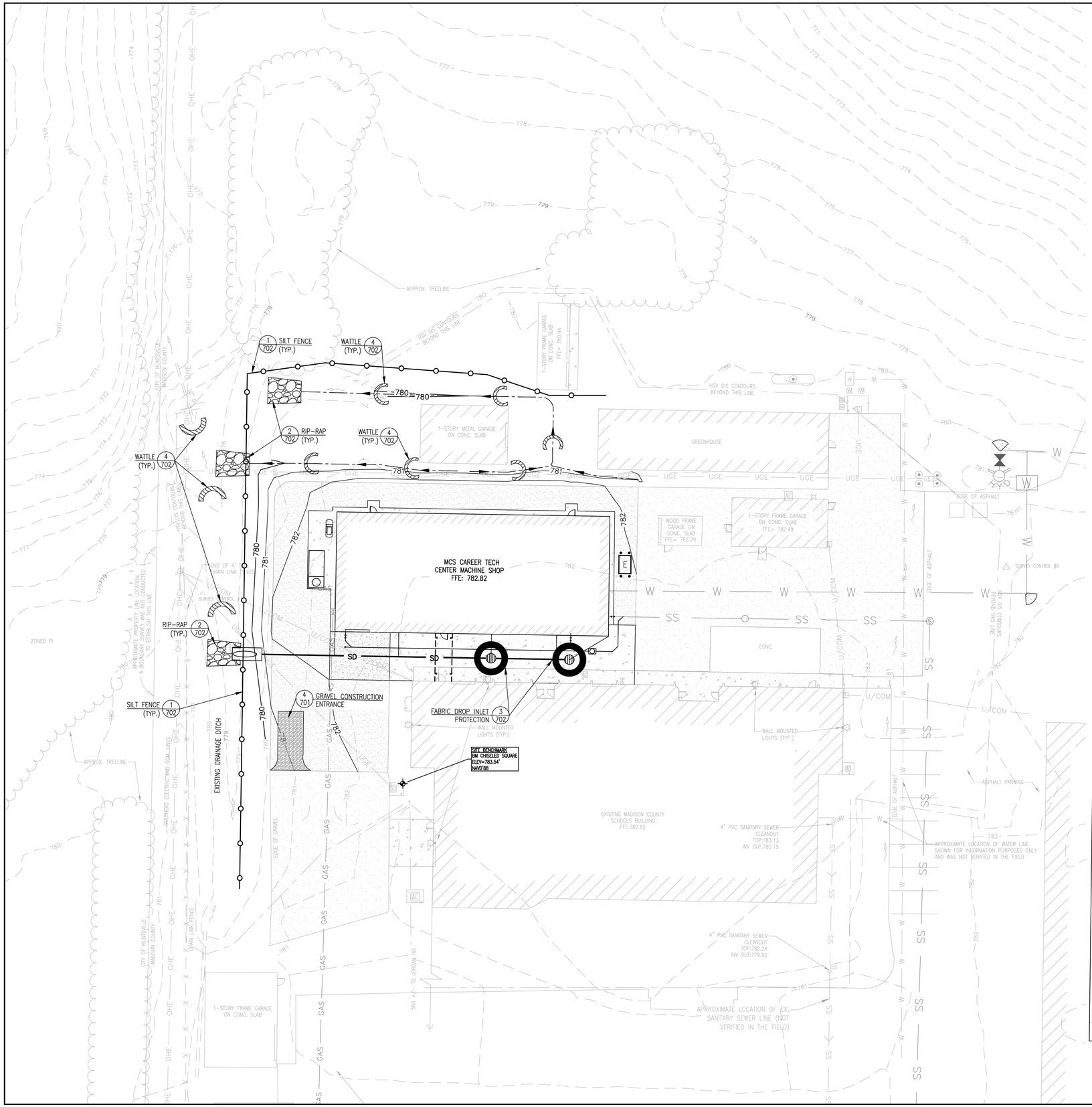

EROSION CONTROL SEQUENCE NOTES:

THIS CONSTRUCTION SEQUENCE IS BASED ON THE ENGINEER'S OPINION AND NOT INTENDED TO BE A COMPREHENSIVE LIST OF EVENTS AND THE CONTRACTOR SHOULD USE HIS/HER DISCRETION TO DETERMINE THE BEST SEQUENCE OF CONSTRUCTION. IN ADDITION, ALL EROSION AND SEDIMENTATION CONTROL MEASURES MUST BE INSTALLED PRIOR TO SELECT WORK ITEMS OR AT THE POINT OF COMPLETION OF EACH WORK ITEM, DEPENDING ON THE NATURE OF THE ITEM. EXAMPLE: SEDIMENT CONTROL PRIOR TO GRADING AND INLET PROTECTION UPON COMPLETION OF INLET CONSTRUCTION.

1. INSTALL SILT FENCE AS SHOWN AND OTHER AREAS TO PREVENT SEDIMENT FROM BEING WASHED ONTO ADJOINING PROPERTY.

2. DEMOLISH EXISTING FACILITIES AS SHOWN ON DEMOLITION PLAN. ENSURE FACILITY REMOVAL DOES NOT GENERATE EROSION OF ADJACENT AREAS. IMPLEMENT BEST MANAGEMENT PRACTICES AS NECESSARY TO PREVENT EROSION.

3. GRADE ACCORDING TO THE GRADING PLAN; INSTALL WATTLE FILTERS AROUND INLETS AND LEAVE EXISTING DRAINAGE WAYS IN PLACE.

4. CONTRACTOR SHOULD UTILIZE WATER TRUCKS, ETC. TO KEEP MOISTURE CONTENT OF SUBGRADE AT OPTIMUM LEVEL TO REDUCE DUST FROM CONSTRUCTION TRAFFIC AND IMPROVE COMPACTION RESULTS.

5. FINISH GRADE THE SUBGRADE. KEEP WATTLE FILTERS AROUND ALL INLETS TO REDUCE SEDIMENT FROM BEING TRANSPORTED OFFSITE. CALL FOR "PROOF ROLL" INSPECTION WITH PROJECT ENGINEER & COMPACTION TESTS. AFTER PASSING INSPECTION, THEN PLACE AGGREGATE BASE.

6. INSTALL WATTLE CHECK DAMS IN DITCHES TO PREVENT SEDIMENT FROM BEING WASHED DOWNSTREAM OF THE SITE.

7. MAINTAIN ALL EROSION AND SEDIMENT CONTROL MEASURES, SUCH THAT THEY ARE PERFORMING THEIR FUNCTION PROPERLY; CLEAN OUT SEDIMENT BUILD-UP WHEN FACILITIES REACH 50% CAPACITY; MAKE SURE THAT ADEQUATE DRAINAGE IS PROVIDED TO REDUCE RUNOFF ONTO EXISTING ROADS.

8. CONTRACTOR SHALL SOLID SOD ALL DISTURBED AREAS IN ORDER TO REDUCE EROSION. BARE GROUND AREAS SHOULD BE MINIMIZED DURING CONSTRUCTION. STORMWATER DETENTION AREAS SHALL BE SOLID SODDED UPON COMPLETION.

9. CONTRACTOR SHOULD BE AWARE THAT EROSION MAY OCCUR IN AREAS THAT ARE UNPROTECTED ON THE CONSTRUCTION SITE. IF THE CONTRACTOR OBSERVES SEDIMENT ACCUMULATION OR EROSION PROBLEMS ON SITE, THEN THE CONTRACTOR MUST CONSULT WITH THE QCP TO DETERMINE THE NECESSARY MEASURES TO STOP SEDIMENTATION, SUCH AS SILT FENCES, WATTLE CHECK DAMS, ETC., AND THEN TAKE THE NECESSARY MEASURES TO STOP THE EROSION, SUCH AS SEED/MULCH, SOD, EROSION BLANKETS, ETC. AS DIRECTED BY THE QCP.

10. WHEN SITE CONSTRUCTION IS COMPLETED, REMOVE ALL SILT FENCES AND WATTLE FILTERS. SPREAD AND GRADE COLLECTED MATERIALS ON SITE.

11. THE CONTRACTOR IS RESPONSIBLE TO COMPLY WITH ALL APPLICABLE FEDERAL, STATE AND/OR LOCAL REGULATIONS.

EROSION CONTROL NOTES:

1. EROSION CONTROL SHALL BE MAINTAINED AT ALL TIMES AND SHALL BE IN ACCORDANCE WITH ALABAMA'S BEST MANAGEMENT PRACTICES.
2. SILT FENCE SHALL BE PLACED IN SUCH A MANNER THAT SEDIMENTATION CAN BE CONTROLLED AROUND THROAT INLETS.
3. SILT FENCE IS REQUIRED WHERE NECESSARY TO PREVENT EROSION AND WASHING OF TOPSOIL INTO EXISTING DRAINAGE WAYS UNTIL TIME AS GRASS HAS BEEN FINALLY ESTABLISHED.
4. WATTLES SHALL BE USED AS TEMPORARY CHECK DAMS IN NEW AND EXISTING DRAINAGE DITCHES UNTIL SUCH TIME AS GRASS HAS BEEN FIRMLY ESTABLISHED TO PREVENT DITCHES FROM ERODING.
5. THE CONTRACTOR IS REQUIRED TO SEED GRASS OR OTHERWISE STABILIZE ALL DISTURBED AREAS AS SHOWN AS SOON AS CONSTRUCTION HAS BEEN COMPLETED IN THE IMMEDIATE AREA.
6. THE CONTRACTOR IS REQUIRED TO INSURE THAT ALL RUNOFF FROM THE CONSTRUCTION SITE INTO EXISTING AREAS HAVE BEEN ADEQUATELY TREATED BY THE USE OF EROSION CONTROL METHODS AS SHOWN HEREON.
7. A CONSTRUCTION ENTRANCE SHALL BE CONSTRUCTED AT THE ENTRANCE NOTED PRIOR TO ENTERING SITE TO COMMENCE SITE GRADING.
8. SILT FENCE SHALL BE INSTALLED ALONG THE PERIMETER OF THE CONSTRUCTION SITE PRIOR TO COMMENCEMENT OF ANY GRADING ACTIVITIES.
9. ANY TEMPORARY SLOPES OR GRADED AREAS TO BE LEFT EXPOSED FOR MORE THAN 5 DAYS SHALL BE TEMPORARILY SEEDED AND MULCHED.
10. SOLID SODDING OR EROSION CONTROL NETTING SHALL BE PLACED ON ALL FINAL SLOPES AT 3:1 OR STEEPER TO ENSURE ESTABLISHMENT OF GRASS ON THE SLOPES.
11. SOLID SOD OR OF ALL AREAS SHALL BE PERFORMED AND MAINTAINED UPON THE COMPLETION OF GRADING FOR THAT PORTION OF THE PROJECT.
12. CHECK DAMS SHALL BE CONSTRUCTED UPON COMPLETION OF GRADING FOR ALL DITCHES.
13. SILT FENCE SHALL REMAIN IN PLACE AROUND THE PERIMETER OF THE SITE AS SHOWN, AND WATTLES SHALL REMAIN AROUND INLETS, ETC. UNTIL GRASS IS ESTABLISHED (75% COVERAGE) FOR THAT AREA.
14. WATTLES SHALL BE INSTALLED AT ALL NEAR STORM STRUCTURES AND REMAIN UNTIL THE IMMEDIATE AREA CONTRIBUTING DRAINAGE TO THE STRUCTURE IS ESTABLISHED (75% COVERAGE).

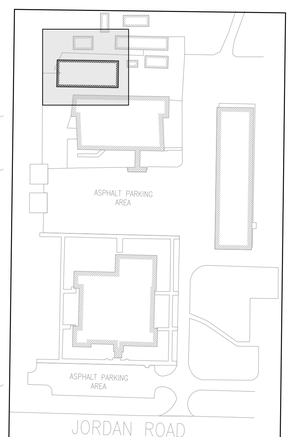

KEY MAP

N

-10 0 10 20 40
SCALE IN FEET
1" = 20'

SITE BENCHMARK:
ELEV=783.54' NAVD'88
BM CHISELED SQUARE

LEGEND

- SILT FENCE
- FABRIC DROP INLET PROTECTION
- WATTLE

JOHNSON & ASSOCIATES
ENGINEERING SURVEYING
1218 CHURCH STREET
HUNTSVILLE, ALABAMA 35801
1-256-533-7331
FAX 1-256-533-7332

ALABAMA PROFESSIONAL
07/26/2022
REGISTERED
No. 19841
ENGINEER
JAMES L. GIR

NOLA VANPEURSEM
ARCHITECTS, PC
MEMBER OF THE AMERICAN INSTITUTE OF ARCHITECTS
301 JEFFERSON STREET
HUNTSVILLE, ALABAMA 35801
(256) 533-4647
NVPARCHITECTS.COM

THIS DRAWING MAY NOT BE REPRODUCED IN WHOLE OR IN PART WITHOUT THE CONSENT OF NOLA/VANPEURSEM ARCHITECTS

MADISON COUNTY SCHOOLS

CAREER TECH CENTER MACHINE SHOP

1275 JORDAN ROAD
HUNTSVILLE, ALABAMA 35811

JOB NUMBER
22256

JSL	GIR	07/26/2022
DRAWN	CHECKED	DATE

REVISIONS

SHEET TITLE
EROSION CONTROL PLAN

SHEET NUMBER
C501
OF
13

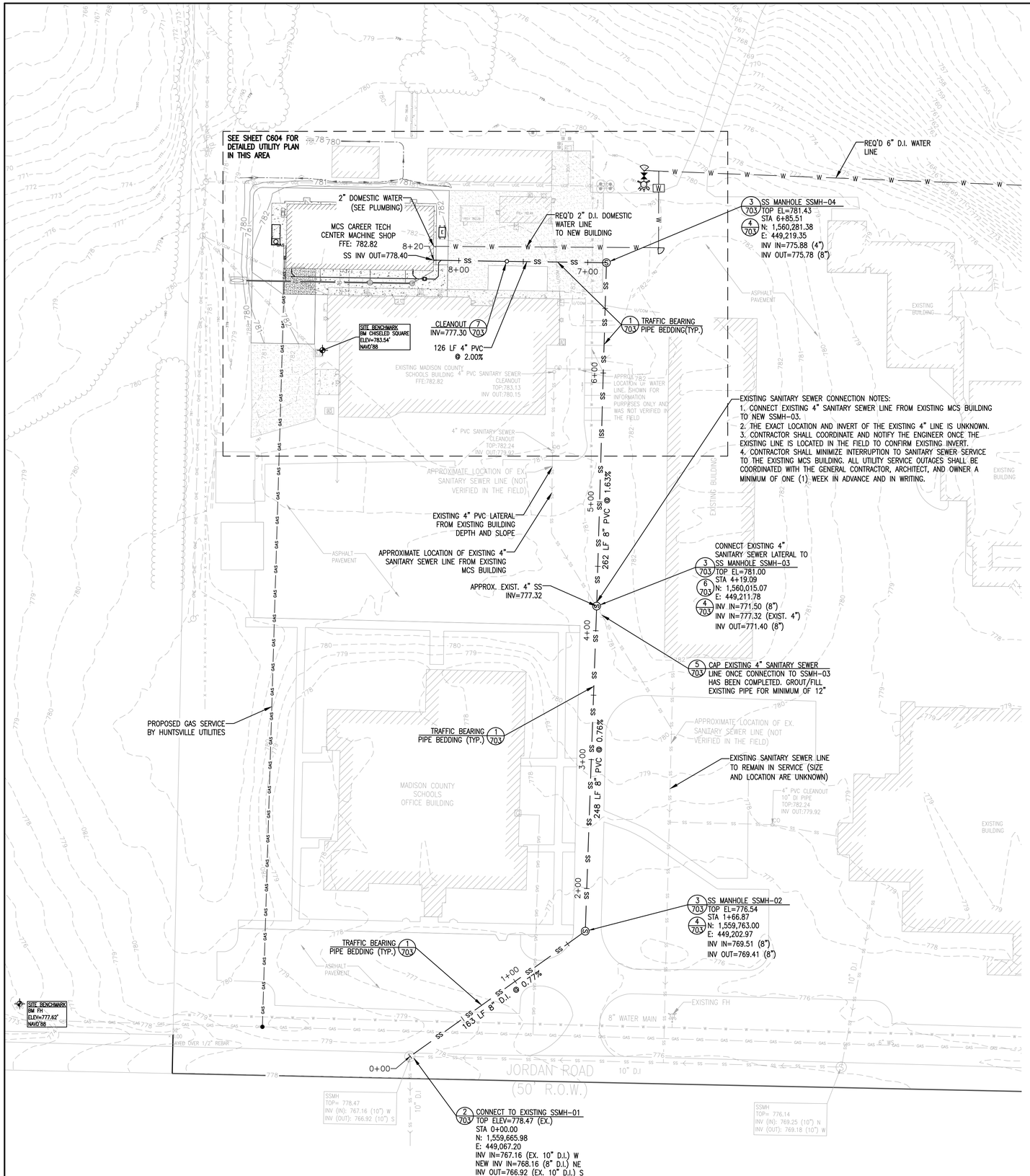

GENERAL SITE UTILITIES NOTES:

1. THE EXISTING MADISON COUNTY SCHOOLS BUILDING TO REMAIN IN SERVICE THROUGHOUT THE PROJECT. CONTRACTOR SHALL SCHEDULE ALL UTILITY DEMOLITION AND PROPOSED WORK ACCORDINGLY. ALL UTILITY SERVICES TO THE EXISTING BUILDING MUST BE MAINTAINED.
2. CONTRACTOR TO COORDINATE WITH HUNTSVILLE UTILITIES, MADISON COUNTY WATER, AND THE MADISON COUNTY ENGINEER FOR ALL ELECTRIC, WATER, AND SEWER INSPECTION REQUIREMENTS, STANDARDS AND GUIDELINES.
3. PROPOSED INSTALLATION OF ALL SANITARY LINES TO MEET MADISON COUNTY STANDARDS AND GUIDELINES.
4. ALL SLOPES ON SEWER 4" & 6" LATERALS MUST BE 1.05% MINIMUM (2% PREFERRED). CONTRACTOR TO VERIFY SLOPES FOR ADEQUATE FALL PRIOR TO CONSTRUCTION.
5. CONTRACTOR TO VERIFY ALL PROPOSED UTILITY LOCATIONS AT THE BUILDING WITH THE BUILDING PLANS.
6. MATCH RIM ELEVATIONS FOR SANITARY SEWER CLEANOUTS & RISERS TO FINISH GRADE (TYPICAL).
7. THRUST BLOCKING IS REQUIRED AT ALL CHANGES IN DIRECTION FOR NEW WATER LINES.
8. SITE CONTRACTOR SHALL COORDINATE WITH PLUMBING CONTRACTOR ON SEWER & ROOF DRAIN (RWL) INVERTS.
9. SITE CONTRACTOR SHALL SECURE COPIES OF ALL PROJECT MECHANICAL & ELECTRICAL DRAWINGS.
10. ALL WATER LINE WORK SHALL COMPLY WITH MADISON COUNTY WATER STANDARD SPECIFICATIONS AND DETAILS.
11. THE CONTRACTOR IS RESPONSIBLE FOR VERIFYING LOCATION OF EXISTING UTILITIES AND WATER CONNECTIONS PRIOR TO BID.
12. PRIOR TO THE BEGINNING OF CONSTRUCTION, IT SHALL BE THE RESPONSIBILITY OF THE GENERAL CONTRACTOR TO CONTACT MADISON COUNTY ENGINEERING, MADISON COUNTY WATER, AND HUNTSVILLE UTILITIES TO SCHEDULE A PRE-CONSTRUCTION MEETING. THE PURPOSE OF THIS MEETING WILL BE TO ENSURE ALL REQUIRED PLANS HAVE BEEN SUBMITTED AND APPROVED BEFORE CONSTRUCTION BEGINS. IFC 2003 105.4.
13. ALL UNDERGROUND FIRE MAINS REQUIRE A PRESSURE TEST AND INSPECTION BY THE LOCAL FIRE MARSHALL BEFORE BEING COVERED. IF CONTRACTOR COVERS FIRE MAIN BEFORE INSPECTION THEY WILL BE REQUIRED TO UNCOVER PIPING. CALL 256.851.6947 TO SET UP INSPECTION.
14. THIS STAMPED SET OF DRAWINGS SHALL BE ON SITE AT ALL TIMES DURING CONSTRUCTION AS WELL AS UPON FINAL INSPECTION.
15. SANITARY SEWER PVC PIPE TO BE SDR-26. SANITARY SEWER DUCTILE IRON PIPE TO BE CLASS 350.
16. BEFORE MAKING A SERVICE CONNECTION TO EITHER A SANITARY SEWER LINE OR MANHOLE, THE DEVELOPER/CONTRACTOR MUST COORDINATE THE CONNECTION WITH THE CITY OF HUNTSVILLE WATER POLLUTION CONTROL DEPARTMENT. TO SCHEDULE YOUR INSPECTION, PLEASE CALL THE WATER POLLUTION CONTROL DEPARTMENT AT 256-883-3719. ALL CONNECTIONS MUST FOLLOW THE SERVICE LATERAL GUIDELINES AS DESCRIBED IN SECTION 5.0 OF THE CITY OF HUNTSVILLE'S DESIGN AND ACCEPTANCE MANUAL FOR SANITARY SEWERS. PLEASE ALLOW A MINIMUM OF 48 HOURS FOR EACH RESPONSE.
17. THE COST TO RELOCATE ANY HUNTSVILLE UTILITIES FACILITIES DUE TO THIS PROJECT MUST BE PAID BY THE DEVELOPER OR PROPERTY OWNER.

LEGEND

- EXISTING WATER MAIN
- PROPOSED WATER MAIN
- EXISTING FIRE HYDRANT
- PROPOSED FIRE HYDRANT
- PROPOSED GATE VALVE
- TEE
- WATER SERVICE LINE
- FLUSHING VALVE ASSEMBLY
- REDUCER
- PROPOSED GAS SERVICE LINE
- EXISTING SANITARY SEWER MANHOLE
- PROPOSED SANITARY SEWER MANHOLE
- PROPOSED SANITARY SEWER LINE
- C.O. CLEAN-OUT
- PROPOSED COMMUNICATIONS LINE
- PROPOSED ELECTRIC LINE
- GREY WATER LINE
- GATE VALVE

N

SCALE IN FEET
1" = 40'

SITE BENCHMARK: ELEV=783.54' NAVD'88 BM CHISELED SQUARE

SITE BENCHMARK: ELEV=777.62' NAVD'88 BM FH

JOHNSON & ASSOCIATES
ENGINEERING SURVEYING
1218 CHURCH STREET
HUNTSVILLE, ALABAMA 35801
1-256-533-7331
FAX 1-256-533-7332

ALABAMA PROFESSIONAL ENGINEER
07/26/2022
REGISTERED NO. 30941
GIUSEPPE VINCENZO GIULIANO TERMOTTO

NOLA VANPEURSEM ARCHITECTS, PC
MEMBER OF THE AMERICAN INSTITUTE OF ARCHITECTS
301 JEFFERSON STREET
HUNTSVILLE, ALABAMA 35801
(256) 533-6617
NVPARCHITECTS.COM

THIS DRAWING MAY NOT BE REPRODUCED IN WHOLE OR IN PART WITHOUT THE CONSENT OF NOLA|VANPEURSEM ARCHITECTS

MADISON COUNTY SCHOOLS

CAREER TECH CENTER MACHINE SHOP

1275 JORDAN ROAD
HUNTSVILLE, ALABAMA 35811

JOB NUMBER
22256

JSL / GIR / 07/26/2022
DRAWN - CHECKED - DATE

REVISIONS

SHEET TITLE
SANITARY SEWER PLAN

SHEET NUMBER
C601
OF
13

SANITARY SEWER PROFILE

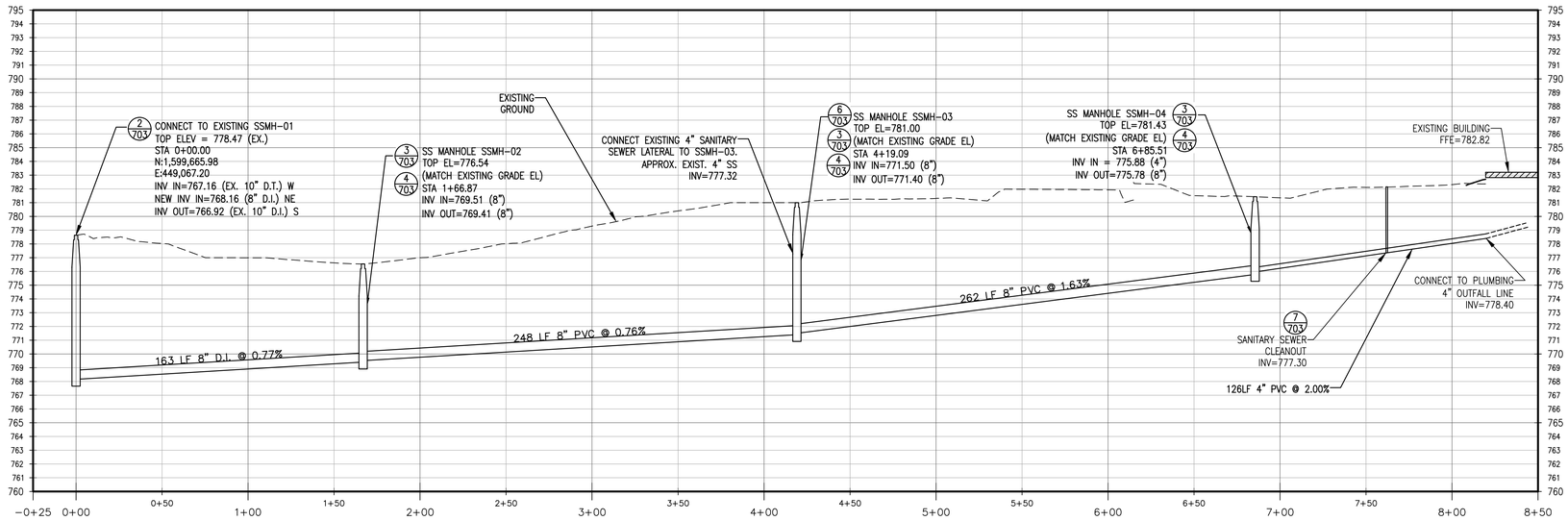

SCALE HORIZ: 1"=40'
SCALE VERT: 1"=5'

JOHNSON & ASSOCIATES
ENGINEERING SURVEYING
1218 CHURCH STREET
HUNTSVILLE, ALABAMA 35801
1-256-533-7331
FAX 1-256-533-7332

ALABAMA PROFESSIONAL
07/26/2022
REGISTERED
No. 31043
ENGINEER
GUILLERMO I. PIERSON

NOLA VANPEURSEM
ARCHITECTS, PC
MEMBER OF THE AMERICAN INSTITUTE OF ARCHITECTS
301 JEFFERSON STREET
HUNTSVILLE, ALABAMA 35801
(256) 533-6617
NVPARCHITECTS.COM

THIS DRAWING MAY NOT BE REPRODUCED IN WHOLE OR IN PART WITHOUT THE CONSENT OF NOLA|VANPEURSEM ARCHITECTS

MADISON COUNTY SCHOOLS

CAREER TECH CENTER
MACHINE SHOP

1275 JORDAN ROAD
HUNTSVILLE, ALABAMA 35811

JOB NUMBER
22256

JSL / GIR / 07/26/2022
DRAWN - CHECKED - DATE

REVISIONS

SHEET TITLE
SANITARY SEWER PROFILE

SHEET NUMBER
C602
OF
13

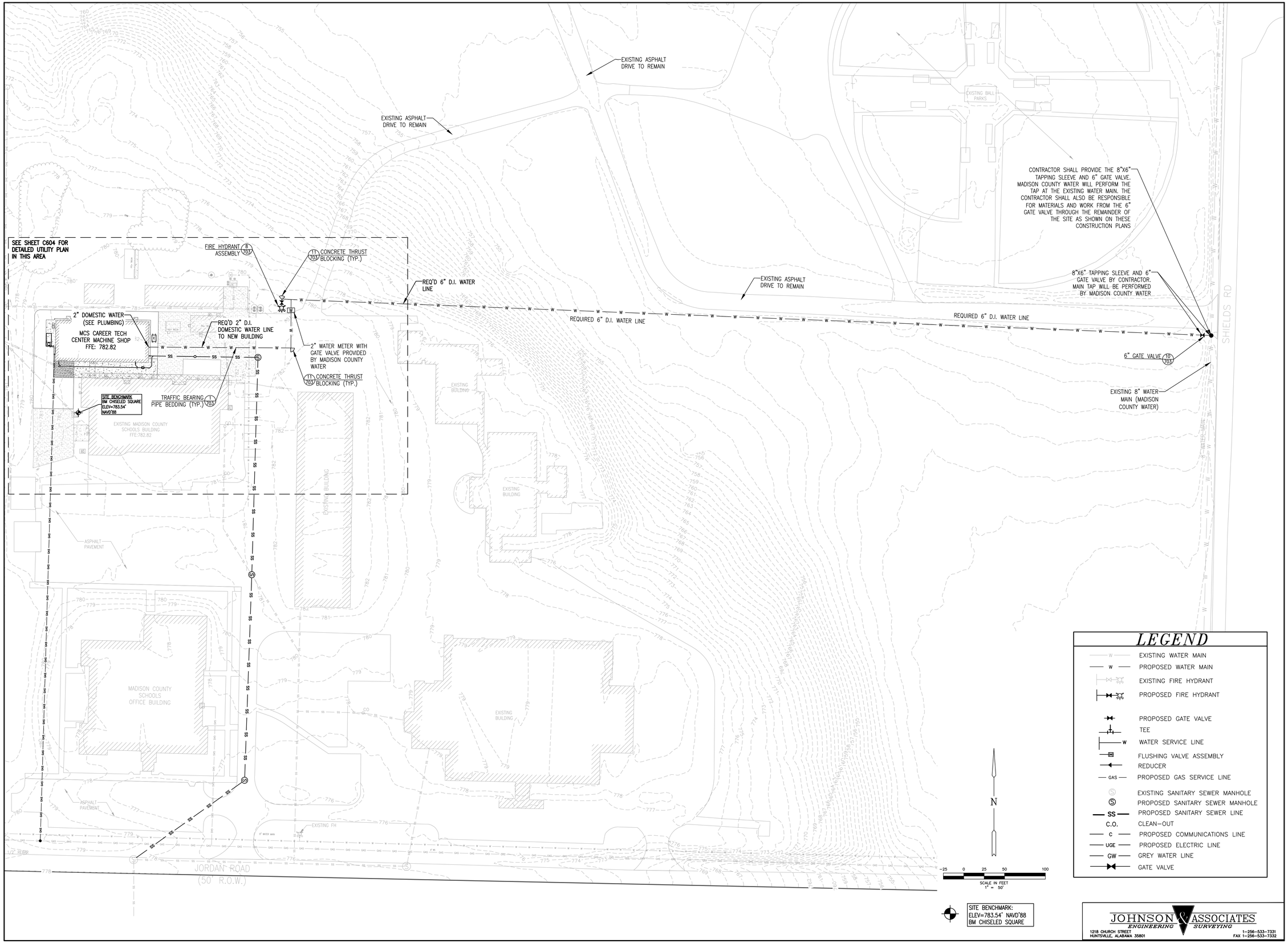

LEGEND

- EXISTING WATER MAIN
- PROPOSED WATER MAIN
- EXISTING FIRE HYDRANT
- PROPOSED FIRE HYDRANT
- PROPOSED GATE VALVE
- TEE
- WATER SERVICE LINE
- FLUSHING VALVE ASSEMBLY
- REDUCER
- PROPOSED GAS SERVICE LINE
- EXISTING SANITARY SEWER MANHOLE
- PROPOSED SANITARY SEWER MANHOLE
- PROPOSED SANITARY SEWER LINE
- CLEAN–OUT
- PROPOSED COMMUNICATIONS LINE
- PROPOSED ELECTRIC LINE
- GREY WATER LINE
- GATE VALVE

JOHNSON & ASSOCIATES
ENGINEERING SURVEYING
1218 CHURCH STREET
HUNTSVILLE, ALABAMA 35801
1-256-533-7331
FAX 1-256-533-7332

ALABAMA PROFESSIONAL ENGINEER
REGISTERED NO. 30843
07/26/2022
GUILLERMO I. REYES

NOLA VANPEURSEM ARCHITECTS, PC
MEMBER OF THE AMERICAN INSTITUTE OF ARCHITECTS
301 JEFFERSON STREET
HUNTSVILLE, ALABAMA 35801
(256) 533-6617
NVPARCHITECTS.COM

THIS DRAWING MAY NOT BE REPRODUCED IN WHOLE OR IN PART WITHOUT THE CONSENT OF NOLA|VANPEURSEM ARCHITECTS

MADISON COUNTY SCHOOLS

CAREER TECH CENTER MACHINE SHOP

1275 JORDAN ROAD
HUNTSVILLE, ALABAMA 35811

JOB NUMBER
22256

JSL / GIR / 07/26/2022
DRAWN - CHECKED - DATE

REVISIONS

SHEET TITLE
WATER DISTRIBUTION PLAN

SHEET NUMBER
C603
OF
13

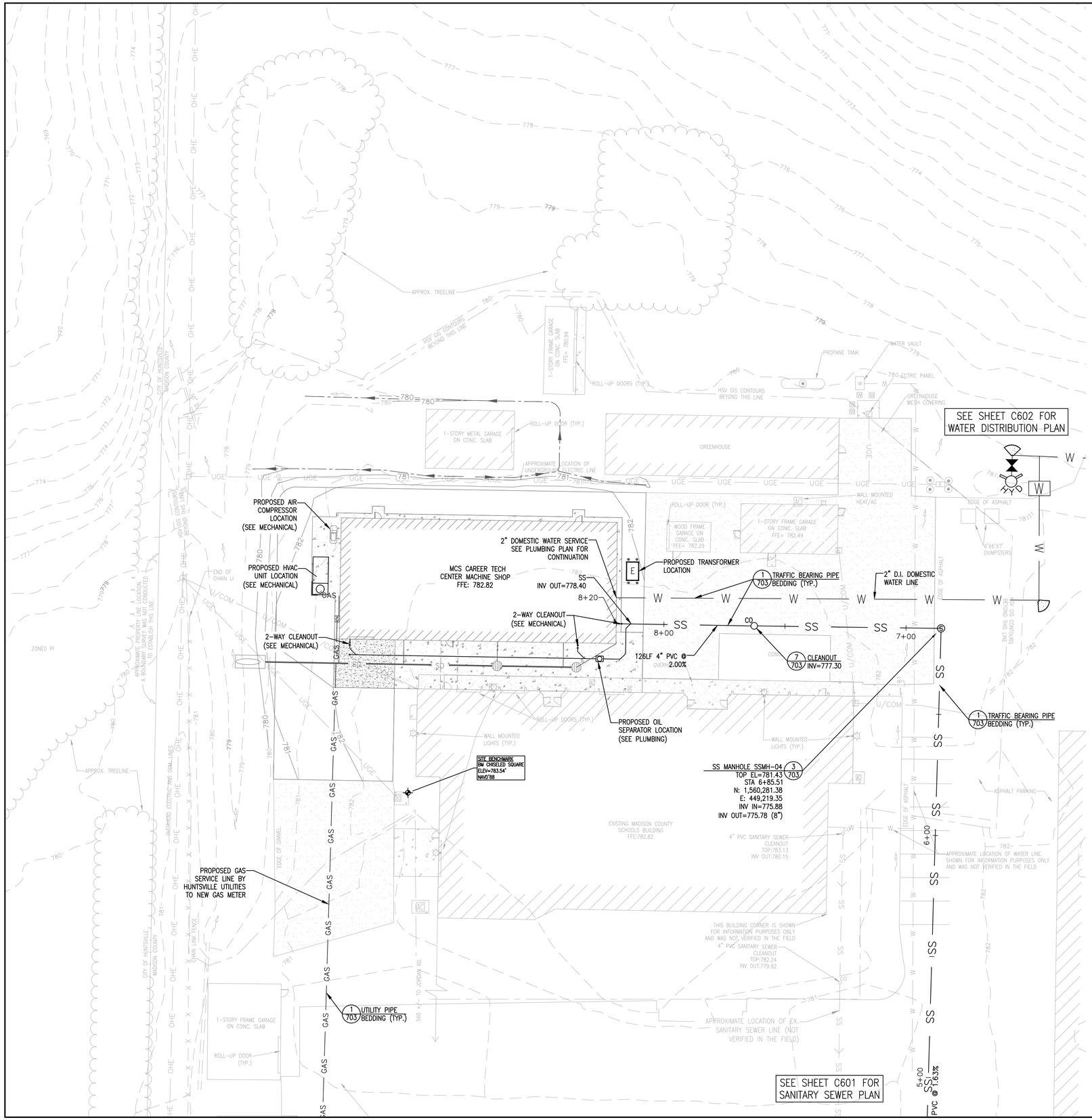

GENERAL SITE UTILITIES:

1. THE EXISTING MADISON COUNTY SCHOOLS BUILDING TO REMAIN IN SERVICE THROUGHOUT THE PROJECT. CONTRACTOR SHALL SCHEDULE ALL UTILITY DEMOLITION AND PROPOSED WORK ACCORDINGLY. ALL UTILITY SERVICES TO THE EXISTING BUILDING MUST BE MAINTAINED.
2. CONTRACTOR TO COORDINATE WITH HUNTSVILLE UTILITIES, MADISON COUNTY WATER, AND THE MADISON COUNTY ENGINEER FOR ALL ELECTRIC, WATER, AND SEWER INSPECTION REQUIREMENTS, STANDARDS AND GUIDELINES.
3. PROPOSED INSTALLATION OF ALL SANITARY LINES TO MEET MADISON COUNTY STANDARDS AND GUIDELINES.
4. ALL SLOPES ON SEWER 4" & 6" LATERALS MUST BE 1.05% MINIMUM (2% PREFERRED). CONTRACTOR TO VERIFY SLOPES FOR ADEQUATE FALL PRIOR TO CONSTRUCTION.
5. CONTRACTOR TO VERIFY ALL PROPOSED UTILITY LOCATIONS AT THE BUILDING WITH THE BUILDING PLANS.
6. MATCH RIM ELEVATIONS FOR SANITARY SEWER CLEANOUTS & RISERS TO FINISH GRADE (TYPICAL).
7. THRUST BLOCKING IS REQUIRED AT ALL CHANGES IN DIRECTION FOR NEW WATER LINES.
8. SITE CONTRACTOR SHALL COORDINATE WITH PLUMBING CONTRACTOR ON SEWER & ROOF DRAIN (RWL) INVERTS.
9. SITE CONTRACTOR SHALL SECURE COPIES OF ALL PROJECT MECHANICAL & ELECTRICAL DRAWINGS.
10. ALL WATER LINE WORK SHALL COMPLY WITH MADISON COUNTY WATER STANDARD SPECIFICATIONS AND DETAILS.
11. THE CONTRACTOR IS RESPONSIBLE FOR VERIFYING LOCATION OF EXISTING UTILITIES AND WATER CONNECTIONS PRIOR TO BID.
12. PRIOR TO THE BEGINNING OF CONSTRUCTION, IT SHALL BE THE RESPONSIBILITY OF THE GENERAL CONTRACTOR TO CONTACT MADISON COUNTY ENGINEERING, MADISON COUNTY WATER, AND HUNTSVILLE UTILITIES TO SCHEDULE A PRE-CONSTRUCTION MEETING. THE PURPOSE OF THIS MEETING WILL BE TO ENSURE ALL REQUIRED PLANS HAVE BEEN SUBMITTED AND APPROVED BEFORE CONSTRUCTION BEGINS. IFC 2003 105.4.
13. ALL UNDERGROUND FIRE MAINS REQUIRE A PRESSURE TEST AND INSPECTION BY THE LOCAL FIRE MARSHALL BEFORE BEING COVERED. IF CONTRACTOR COVERS FIRE MAIN BEFORE INSPECTION THEY WILL BE REQUIRED TO UNCOVER PIPING. CALL 256.851.6947 TO SET UP INSPECTION.
14. THIS STAMPED SET OF DRAWINGS SHALL BE ON SITE AT ALL TIMES DURING CONSTRUCTION AS WELL AS UPON FINAL INSPECTION.
15. SANITARY SEWER PVC PIPE TO BE SDR-26. SANITARY SEWER DUCTILE IRON PIPE TO BE CLASS 350.
16. BEFORE MAKING A SERVICE CONNECTION TO EITHER A SANITARY SEWER LINE OR MANHOLE, THE DEVELOPER/CONTRACTOR MUST COORDINATE THE CONNECTION WITH THE CITY OF HUNTSVILLE WATER POLLUTION CONTROL DEPARTMENT. TO SCHEDULE YOUR INSPECTION, PLEASE CALL THE WATER POLLUTION CONTROL DEPARTMENT AT 256-883-3719. ALL CONNECTIONS MUST FOLLOW THE SERVICE LATERAL GUIDELINES AS DESCRIBED IN SECTION 5.0 OF THE CITY OF HUNTSVILLE'S DESIGN AND ACCEPTANCE MANUAL FOR SANITARY SEWERS. PLEASE ALLOW A MINIMUM OF 48 HOURS FOR EACH RESPONSE.
17. THE COST TO RELOCATE ANY HUNTSVILLE UTILITIES FACILITIES DUE TO THIS PROJECT MUST BE PAID BY THE DEVELOPER OR PROPERTY OWNER.

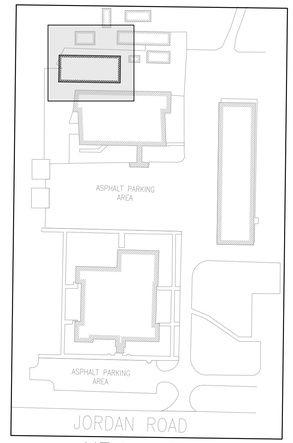

KEY MAP

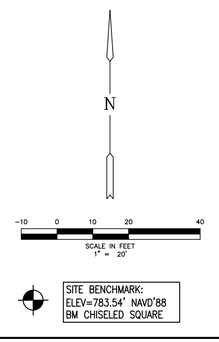

SITE BENCHMARK:
ELEV=783.54' NAVD'88
BM CHISELED SQUARE

LEGEND

- EXISTING WATER MAIN
- PROPOSED WATER MAIN
- EXISTING FIRE HYDRANT
- PROPOSED FIRE HYDRANT
- PROPOSED GATE VALVE
- TEE
- WATER SERVICE LINE
- FLUSHING VALVE ASSEMBLY
- REDUCER
- PROPOSED GAS SERVICE LINE
- EXISTING SANITARY SEWER MANHOLE
- PROPOSED SANITARY SEWER MANHOLE
- PROPOSED SANITARY SEWER LINE
- C.O. CLEAN-OUT
- PROPOSED COMMUNICATIONS LINE
- PROPOSED ELECTRIC LINE
- GREY WATER LINE
- GATE VALVE

JOHNSON & ASSOCIATES
ENGINEERING SURVEYING
1218 CHURCH STREET
HUNTSVILLE, ALABAMA 35801
1-256-533-7331
FAX 1-256-533-7332

ALABAMA PROFESSIONAL ENGINEER
07/26/2022
REGISTERED NO. 30843
GUILLERMO I. REYES

NOLA VANPEURSEM ARCHITECTS, PC
MEMBER OF THE AMERICAN INSTITUTE OF ARCHITECTS
301 JEFFERSON STREET
HUNTSVILLE, ALABAMA 35801
(256) 533-6617
NVPARCHITECTS.COM

THIS DRAWING MAY NOT BE REPRODUCED IN WHOLE OR IN PART WITHOUT THE CONSENT OF NOLA|VANPEURSEM ARCHITECTS

MADISON COUNTY SCHOOLS

CAREER TECH CENTER MACHINE SHOP

1275 JORDAN ROAD
HUNTSVILLE, ALABAMA 35811

JOB NUMBER
22256

JSL / GIR / 07/26/2022
DRAWN - CHECKED - DATE

REVISIONS

SHEET TITLE
DETAILED UTILITY PLAN

SHEET NUMBER
C604
OF
13

GENERAL NOTES

1. Contractor is responsible for making application and paying for necessary permits.
2. The Contractor is to prevent the destruction of all survey monuments, bench marks, property corners and all other survey points. Where the removal of such points is necessary for the accomplishment of the work, the Contractor is to inform the Engineer in writing, prior to the disturbance of any point, and is not to disturb the point until written permission to do so has been issued by the Engineer.
3. All existing trees to be preserved or outside of the limits of work are to be protected during the accomplishment of the work, and are not to be damaged in any manner.
4. Contractor shall repair any damage to existing streets or driveways that is created during construction activities.
5. All boulders, debris, excess construction materials, material generated from demolition of existing structures and facilities or trash to be removed from site at contractor's expense.
6. Contractor shall be responsible for having existing utilities located prior to excavation. We assume no responsibility as to the accuracy or completeness of utilities depicted on these drawings.
7. All storm drainage pipes shall be reinforced concrete Class III per ASTM C–76 unless otherwise noted. Pipe bedding shall be Class "C" trench bedding except as noted. Compacted granular material for bedding may be required based on unsuitable ground water conditions or conditions such that shaped trench bottom cannot be properly obtained by the Contractor.
8. Pavement cuts shall be repaired with material in kind to that removed.
9. Rip Rap shall be Class I, in accordance with Section 814, ALDOT, and shall be grouted where indicated on the plans.
10. In accordance with generally accepted construction practices, the contractor will be solely and completely responsible for conditions of the jobsite, including safety of all persons and property during performance of the work. This requirement will apply continuously and not be limited to normal working hours.

    Contractor shall provide adequate traffic control devices and safety measures for construction work within public right–of–ways in accordance with the Manual on Uniform Traffic Control Devices for Streets and Highways.

    The duty of the Engineer to conduct construction review of the contractor's performance is not intended to include review of the adequacy of the Contractor's safety measures, in, on or near the construction site.
11. The storm drainage system for this site has been designed for a 25 year storm event for ditch designs and a 10 year storm event for pipe designs, unless otherwise noted, in accordance with the standards of the City of Madison. With regard to the system capacity, no warranty is expressed or implied for storms of greater intensity.
12. This document, and the ideas and designs incorporated herein as an instrument of professional services, is the property of Johnson & Associates, Inc., and is not to be used, in whole or part, for any other project without the written authorization of Johnson & Associates, Inc.

EARTHWORK GENERAL NOTES

1. Site topography maps and other topographic data shown on the plans or included in the specifications are for the information of the Contractor. The Contractor shall make such additional investigations as required to acquaint himself adequately with the site topography, and the subsurface soil conditions for preparation of his bid, and for the successful execution of the work.
2. All proposed contour elevations shown are finish grade.
3. Protection of Work: The Contractor is to be solely responsible for the protection of his work. Such grading is the responsibility of the Contractor and will be at no additional cost to the Owner. The Owner may direct the Contractor to perform necessary grading and drainage to prevent surface run off from damaging the work.
4. Contractor shall be required to install silt fences, wattles, etc., to prevent erosion of disturbed earth and fill areas. Silt fences shall be required, if necessary to prevent loose dirt from washing onto streets and adjacent property. Contractor shall be responsible for erosion and sediment control until final inspection by city.
5. All earth fill shall be compacted to 95% of the maximum dry density, plus or minus 2% of optimum moisture (ASTM–D6798), except for earth fills under roads which are to comply with paving specifications.
6. Earth fill shall be placed in uniform layers or lifts not exceeding 8" compacted thickness.
7. Earth fill shall be placed in accordance with the Civil Specifications. Earth fill under the building shall also meet the requirements of the architect's plans and specifications.

REINFORCED CONCRETE NOTES

1. All concrete shall be air entrained 3000 psi minimum compressive strength at 28 days, Class "A" unless otherwise noted.
2. All construction joints shall be constructed with shear keys in accord–ance with the shear key detail located on sheet 701.
3. All reinforcing steel shall be Grade 60 deformed, and shall conform to ASTM A615, for Billet Steel.
4. Lap Splices and Bar Embedments shall be in accordance with the table on sheet 701.
5. Concrete Air Content and Slump shall be in accordance with the table on sheet 701.
6. All reinforcing bars shall be shop bent in accordance with the table on sheet 701.
7. Heating of reinforcing bars to bend them, or straighten them will not be allowed.
8. All Welded Wire Fabric shall conform to ASTM A185, smooth fabric with an ASTM yield strength of 65,000 psi.

PAVEMENT CONSTRUCTION GENERAL NOTES

1. ALDOT, shall mean State of Alabama Highway Department Standard Specifications for Highway Construction, Latest Edition.
2. Crushed Aggregate Base Course Plant Mixed shall be placed in accordance with Section 301 ALDOT. All materials shall be in accordance with Section 825, Type B, 100% compaction.
3. Portland Cement Concrete Pavement shall be placed in accordance with Section 450, ALDOT.
4. Bituminous Tack Coat shall be placed in accordance with Section 424, ALDOT. Tack Coat shall be NTS–1HM.
5. Bituminous Concrete Wearing Surface Layer shall be placed in accordance with Section 424, ALDOT. Use ALDOT 424A–340.
6. The site shall be cleared and all unsuitable material removed prior to placing and compacting embankments.
7. All subgrades shall be cleared and grubbed, scarified to a depth of 6", and then recompacted to 100% of the maximum dry density, plus or minus 2% of optimum moisture, ASTM–D698.
8. In rock excavation a minimum of 1 foot of soil shall be placed over rock prior to placement of Base Material.

SOLID SODDING NOTES

ALL DISTURBED AREAS SHALL BE SOLID SODDED.

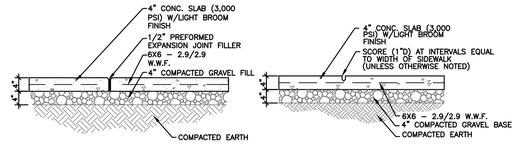

NOTE:
CONTROL JOINTS ARE TO BE SPACED 5'–0"o.c.–UNLESS NOTED OTHERWISE.

NOTES:
1. EXPANSION JOINTS ARE TO BE SPACED 25'–0"o.c. (MAX) (UNLESS INDICATED ON DRAWINGS) AND AT CHANGES IN DIRECTION OF WALKS AND AT WALK EDGES ABUTTING CURBS, WALLS, WHERE NEW WALK INTERCEPTS EXISTING, ETC.
2. ALL CONCRETE SIDEWALK EXPANSION JOINTS SHALL BE SEALED WITH A SELF–LEVELING SILICONE BASED JOINT SEALANT APPROVED BY THE ARCHITECT. USE 1/2" EXPANSION JOINT CAPS INSTALLED OVER THE TOP OF THE 1/2" EXPANSION JOINT MATERIAL WHEN FORMING AND POURING THE EXPANSION JOINTS.

1/701 STANDARD CONCRETE SIDEWALK
NOT TO SCALE

SHEAR KEY DETAIL

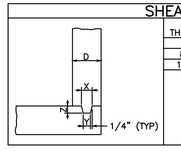

WALL THICKNESS (D)	NOMINAL KEY SIZE	X	Y	Z
4" – 7"	2" X 2"	1 1/2"	1"	1 1/2"
8" – 13"	2" X 4"	3 1/2"	3"	1 1/2"
14" – 20"	2" X 6"	5 1/2"	5"	1 1/2"
SEE DRAWINGS	2" X 8"	7 1/4"	6 3/4"	1 1/2"
	2" X 10"	9 1/4"	8 3/4"	1 1/2"
	4" X 4"	3 1/2"	3"	3 1/2"
	4" X 6"	5 1/2"	5"	3 1/2"
	4" X 8"	7 1/4"	6 3/4"	3 1/2"
	4" X 10"	9 1/4"	8 3/4"	3 1/2"
	4" X 12"	11 1/4"	10 3/4"	3 1/2"

CONCRETE AIR CONTENT TABLE

NOMINAL MAXIMUM SIZE COARSE AGGREGATE (INCHES)	TOTAL AIR CONTENT PERCENT BY VOLUME
3/4	4 TO 8
1	3.5 TO 6.5
1 1/2	3 TO 6

BAR BEND TABLE

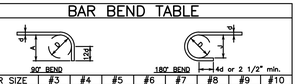

BAR SIZE	#3	#4	#5	#6	#7	#8	#9	#10
DIAMETER (d)	0.375"	0.5"	0.625"	0.75"	.875"	1.0"	1.128"	1.27"
D	2.25"	3.0"	3.75"	4.50"	5.25"	6.0"	9.02"	10.16"
A	6"	8"	10"	12"	14"	16"	19"	22"
J	3"	4"	5"	6"	7"	8"	11.25"	12.75"

LAP SPLICE AND MINIMUM BAR EMBEDMENT TABLE

BAR SIZE	LAP SPLICE LENGTH	EMBEDMENT LENGTH
#4	20"	12"
#5	26"	15"
#6	33"	19"
#7	45"	26"
#8	59"	35"
#9	74"	44"
#10	95"	56"

NOTE: ALL CONSTRUCTION JOINTS SHALL HAVE CONTINUOUS SHEAR KEYS CONSTRUCTED IN ACCORDANCE WITH THE SHEAR KEY DETAIL

DOWEL BAR SPACING TABLE

d	SPACING
6"	18" O.C.
9"	15" O.C.
12"	12" O.C.
16"	8" O.C.

UNLESS OTHERWISE INDICATED SHEAR KEY SIZES SHALL BE IN ACCORDANCE WITH THE FOLLOWING TABLE

WALL THICKNESS (D)	SHEAR KEY SIZE
4" – 7"	2" X 2"
8" – 13"	2" X 4"
14" – 20"	2" X 6"
21" – 26"	2" X 8"

SLUMP TABLE

TYPE OF CONSTRUCTION	SLUMP (INCHES) MAX.	MIN.
REINFORCED FOOTINGS AND SLABS	3	1
REINFORCED WALLS	4	1
BACKFILL CONCRETE	6	3

2/701 CONCRETE TABLES
NOT TO SCALE

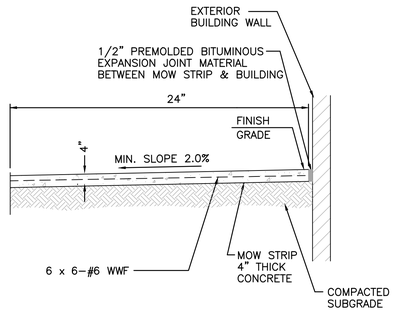

3/701 24" MOW STRIP
NOT TO SCALE

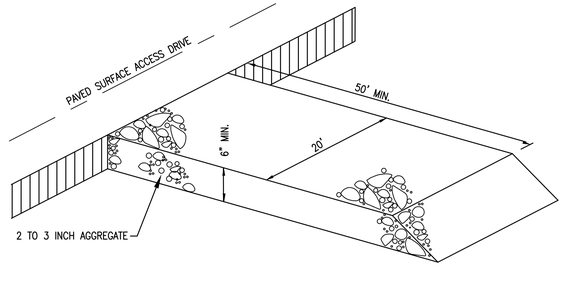

4/701 GRAVEL CONSTRUCTION ENTRANCE
NOT TO SCALE

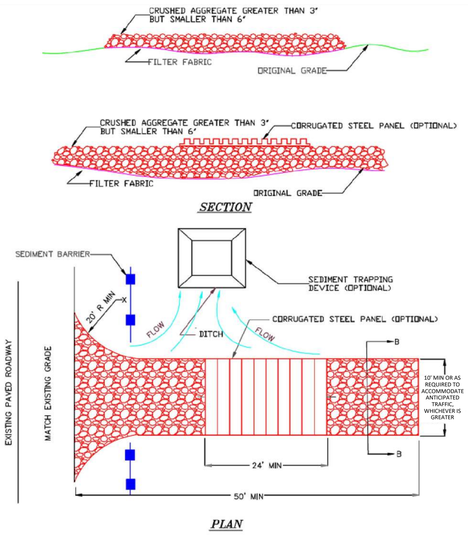

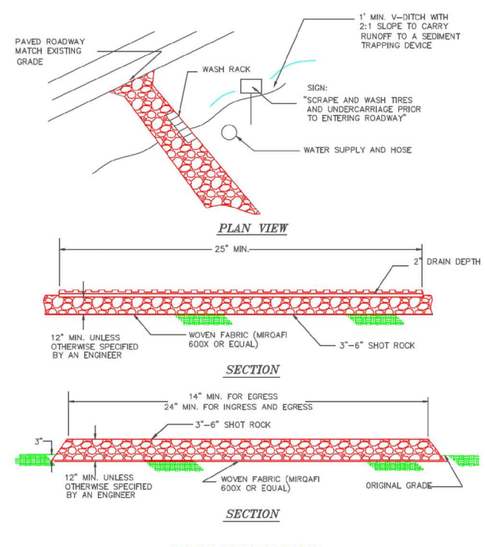

WASHDOWN STATION

JOHNSON & ASSOCIATES
ENGINEERING SURVEYING
1218 CHURCH STREET
HUNTSVILLE, ALABAMA 35801
1–256–533–7331
FAX 1–256–533–7332

ALABAMA PROFESSIONAL
07/26/2022
REGISTERED NO. 10843
ENGINEER
GUILLERMO I. REYES

NOLA VANPEURSEM
ARCHITECTS, PC
MEMBER OF THE AMERICAN INSTITUTE OF ARCHITECTS
301 JEFFERSON STREET
HUNTSVILLE, ALABAMA 35801
(256) 533–6617
NVPARCHITECTS.COM

THIS DRAWING MAY NOT BE REPRODUCED IN WHOLE OR IN PART WITHOUT THE CONSENT OF NOLA|VANPEURSEM ARCHITECTS

MADISON COUNTY SCHOOLS

CAREER TECH CENTER
MACHINE SHOP

1275 JORDAN ROAD
HUNTSVILLE, ALABAMA 35811

JOB NUMBER
22256

JSL / GIR / 07/26/2022
DRAWN - CHECKED - DATE

REVISIONS

SHEET TITLE
CONSTRUCTION DETAILS

SHEET NUMBER
C701
OF
13

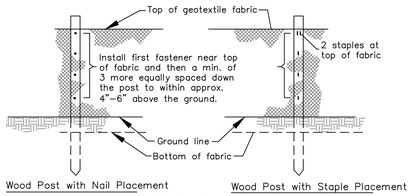

FRONT VIEW

FASTENERS FOR SILT FENCES
(Not to scale)

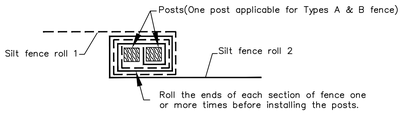

ROLL JOINT FOR JOINING TWO ADJACENT SILT FENCE SECTIONS
(Not to scale)

INSTALLATION

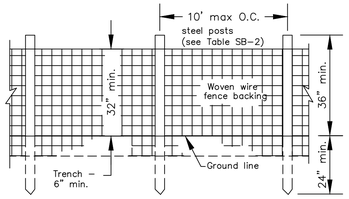

FRONT VIEW
(Not to scale)

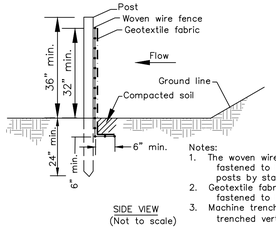

SIDE VIEW
(Not to scale)

Notes:
1. The woven wire fencing shall be fastened to the upstream side of posts by staples or wire ties.
2. Geotextile fabric shall be securely fastened to the woven wire fencing.
3. Machine trenched geotextile shall be trenched vertical at least 8" deep.

TYPE "A" SILT FENCE

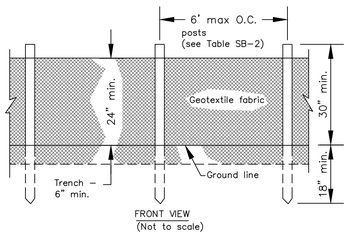

FRONT VIEW
(Not to scale)

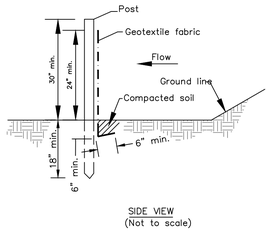

SIDE VIEW
(Not to scale)

TYPE "B" SILT FENCE

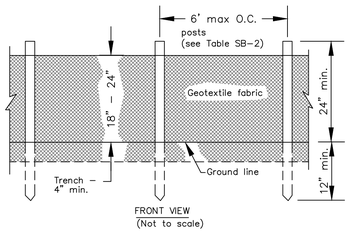

FRONT VIEW
(Not to scale)

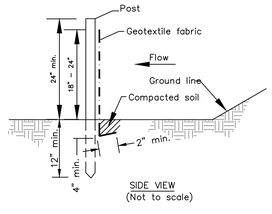

SIDE VIEW
(Not to scale)

TYPE "C" SILT FENCE

1/702 SILT FENCE
NOT TO SCALE



SILT FENCE "J" HOOK DETAIL

NOTE:
All rip–rap shall be uniformly graded from the smallest to the largest stone sizes.

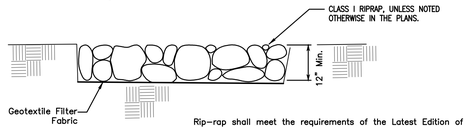

Rip–rap shall meet the requirements of the Latest Edition of The Alabama Department of Transportation Specifications, Section 814.01 (a) Class 1 Rip–rap.
H=12" Min.

2/702 RIPRAP DETAIL
NOT TO SCALE

NOTES:
1. FRAMES WITH EITHER SQUARE OR CIRCULAR BASES MAY BE USED. SELECTED FRAME BASE SHOULD PROVIDE BEST SEAL AROUND INLET AS DIRECTED BY THE ENGINEER.
2. FILL POCKETS AROUND BASE OF FILTER COVER WITH #57 STONE OR SOIL. STONE IS REQUIRED WHEN ANCHORING THE MANUFACTURED INLET PROTECTION DEVICE OVER PAVED DITCH OR FLUME.
3. USE ONLY DURING STAGE 3 OR 4 INLET CONSTRUCTION.
4. FOR MEDIAN INLET PROTECTION, THE ELEVATION OF THE COARSE SCREEN TOP SHOULD BE A MINIMUM OF 6" OR BELOW THE ELEVATION OF THE OUTSIDE EDGE OF THE INSIDE SHOULDER.
5. INLET PROTECTION DEVICES MAY BE USED IN LIEU OF WATTLES/SILT FENCE AT DISCRETION OF CONTRACTOR AS APPROVED BY THE ENGINEER.

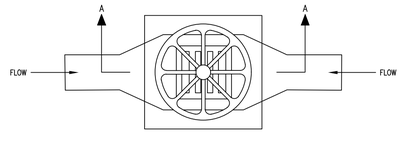

PLAN

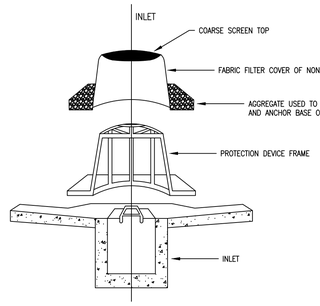

SECTION "A–A"

3/702 FABRIC INLET PROTECTION
NOT TO SCALE

Specifications

The patented **Silt-Saver Frame** is constructed of partially recycled, high molecular weight, high-density polyethylene copolymer (HDPE). This material has super stress crack resistance combined with high impact strength and rigidity.

Frames are currently available in 2 models:
R-100A - Round Base to fit the 60"O. D. precast risers as used in most residential and light commercial applications and
S-200A - Square Base to fit the 60" O.D. brick or precast designs as used in most D.O.T. Highway applications.

Silt-Saver Frame and Filter Assembly will also accommodate drainage structures smaller than these listed with no special design required.

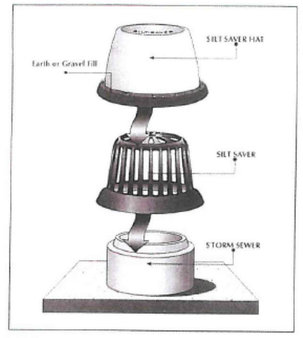

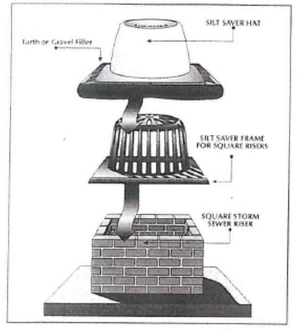

The patented **Silt-Saver Filter** designed to custom fit each frame and is constructed of non-woven polyester, needle punched and heat-set to provide durability. This material was chosen for its ability to provide **consistent** and **continuous** filtration under everyday job site conditions. The woven high visibility green filter top not only provides the **visible safety** but also provides a **higher flow** for the unexpected rain events.

Weight	D-3776	3.0 oz y^2
Tensile strength	D-4632	80lbs
Elongation	D-4632	50%
Mullen burst	D-3786	150
Puncture strength	D-4833	50
Trapezoid tear	D-4533	30
AOS-US std sieve	D-4751	70
Permittivity, -1 *	D-4491	2.0
Flow *	D-4491	102 gal/min/ft2
U.V. Resistance, %	D-4355 (500 hrs)	70

* Due to the variations in soil conditions, (soil types, soil stability, etc.) Silt-Saver, Inc. does not specify long-term effectiveness, (resistance to clogging). If this is a concern, one may want to conduct a gradient ratio test that will compare a specific soils hydraulic gradient to the hydraulic through the filter.

Silt-Saver, Inc. warrants all products against material defects and workmanship at time products are received. However due to the nature of construction jobsites, the durability and long term use of these products is not warranted.

All statements, information and data given herein are believed to be accurate and reliable but are presented without guaranty, warranty or responsibility of any kind, expressed or implied. The user should not assume that all safety measures are indicated, or that other measures of safety may not be required.

For Product Information Contact Your Local Distributor or Silt-Saver, Inc.
(770) 388-7818 -or- Toll Free 1 (888) 382-SILT (7458)
Web: www.siltsaver.com **Email: sales@siltsaver.com**

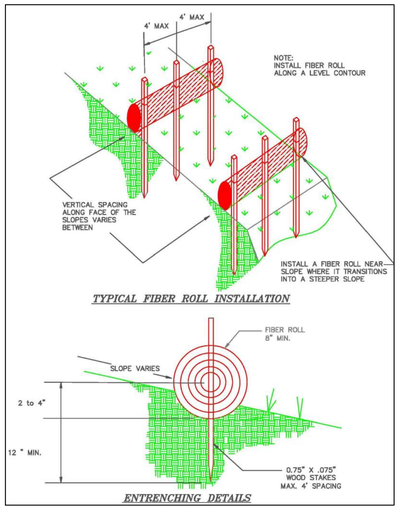

TYPICAL FIBER ROLL INSTALLATION

ENTRENCHING DETAILS

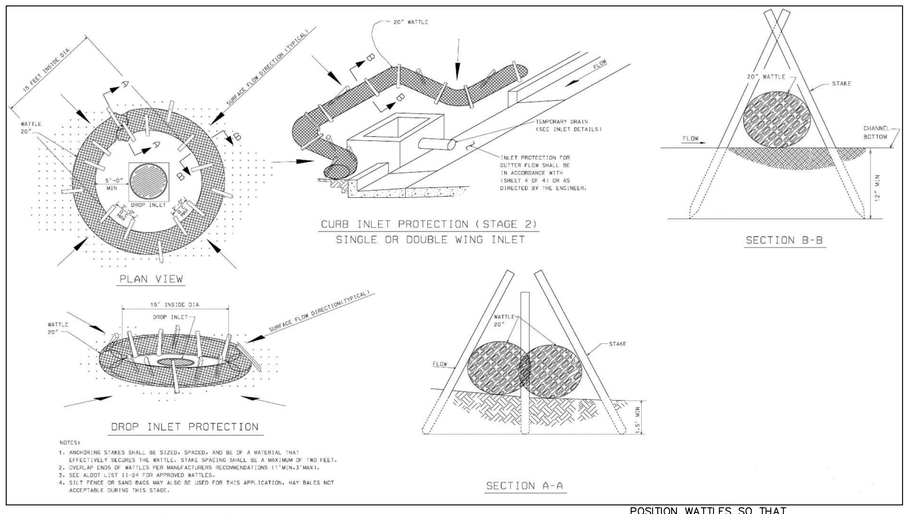

SAND BAGS SHALL BE USED TO HOLD WATTLES IN PLACE IN PAVED AREAS

4/702 WATTLE DETAILS
NOT TO SCALE

POSITION WATTLES SO THAT THE TOP OF WATTLE IS LEVEL WITH THE BOTTOM OF THE WATTLE ABOVE IT. TALLER WATTLE MAY BE USED TO MEET THIS REQUIREMENT.

JOHNSON & ASSOCIATES
ENGINEERING SURVEYING
1218 CHURCH STREET
HUNTSVILLE, ALABAMA 35801
1–256–533–7331
FAX 1–256–533–7332

ALABAMA PROFESSIONAL ENGINEER
07/26/2022
REGISTERED 19843
GUILLERMO I. REYES

NOLA VANPEURSEM
ARCHITECTS, PC
MEMBER OF THE AMERICAN INSTITUTE OF ARCHITECTS
301 JEFFERSON STREET
HUNTSVILLE, ALABAMA 35801
(256) 533-6617
NVPARCHITECTS.COM

THIS DRAWING MAY NOT BE REPRODUCED IN WHOLE OR IN PART WITHOUT THE CONSENT OF NOLA|VANPEURSEM ARCHITECTS

MADISON COUNTY SCHOOLS

CAREER TECH CENTER
MACHINE SHOP

1275 JORDAN ROAD
HUNTSVILLE, ALABAMA 35811

JOB NUMBER
22256

JSL	GIR	07/26/2022
DRAWN	CHECKED	DATE

REVISIONS

SHEET TITLE
CONSTRUCTION DETAILS

SHEET NUMBER
C702
OF
13

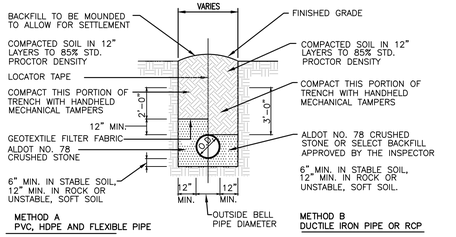

METHOD A
PVC, HDPE AND FLEXIBLE PIPE

METHOD B
DUCTILE IRON PIPE OR RCP

NOTE:

1. THE TRENCH SHALL BE BACKFILLED WITH SOIL MATERIAL WHICH IS CLEAN AND FREE FROM LARGE ROCK AND FOREIGN MATTER. THIRTY-SIX (36) INCHES OF COVER SHALL BE PROVIDED OVER THE PIPE BEFORE ANY HEAVY COMPACTION EQUIPMENT WILL BE ALLOWED.
2. COMPACTION TESTS WILL NOT BE REQUIRED AS LONG AS THE CONTRACTOR IS FOLLOWING THE PROPER PROCEDURES AND USING PROPER EQUIPMENT AND TECHNIQUES IN BACKFILLING OPERATIONS.

UNDERGROUND UTILITY PIPE BEDDING DETAILS IN NON-TRAFFIC AREAS
NOT TO SCALE

NOTE: USE THESE DETAILS FOR ALL UNDERGROUND UTILITY PIPES INCLUDING, BUT NOT LIMITED TO STORM, SANITARY SEWER, GAS, ELECTRIC, TELEPHONE, WATER, ETC. SIDE SLOPES AND REQUIREMENTS FOR TRENCHING SHALL COMPLY WITH OSHA GUIDLINES.

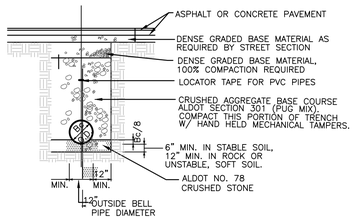

UNDERGROUND UTILITY PIPE BEDDING DETAILS WITHIN PROPOSED TRAFFIC AREAS
NOT TO SCALE

1/703 UNDERGROUND UTILITY PIPE BEDDING
NOT TO SCALE

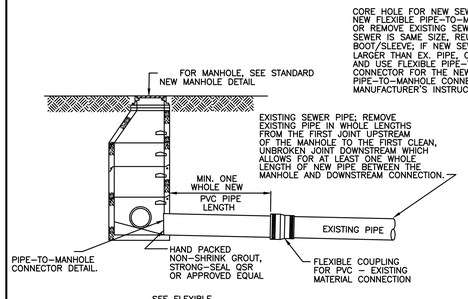

2/703 CONNECTION OF NEW MANHOLE TO EXISTING SEWER
NOT TO SCALE

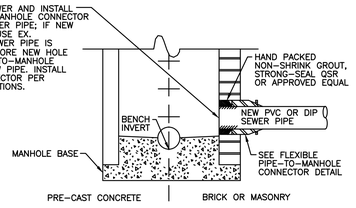

CONNECTION OF NEW SEWER TO EXISTING MANHOLE
NOT TO SCALE

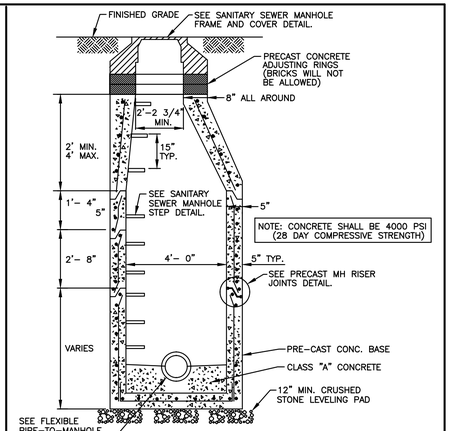

NOTE: FOR MANHOLES LESS THAN 4.5' IN DEPTH, CONTRACTOR SHALL PROVIDE A SPECIAL ORDER MANHOLE OR A POURED-IN-PLACE MANHOLE AS APPROVED BY THE CITY ENGINEER.

3/703 SANITARY SEWER MANHOLE DETAIL
NOT TO SCALE

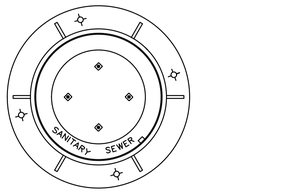

COVER DETAIL

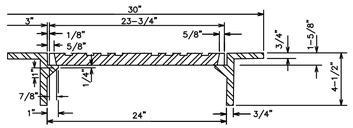

SECTION

NOTE:
COVER AND FRAME SHALL CONFORM TO THE REQUIREMENTS OF CLASS 30 FOR GRAY IRON CASTING, ASTM (A 48) FRAME B COVER SHALL BE CERTIFIED BY MFG. TO BE TRAFFIC BEARING WHEN APPLICABLE.

4/703 RING AND COVER DETAIL
NOT TO SCALE

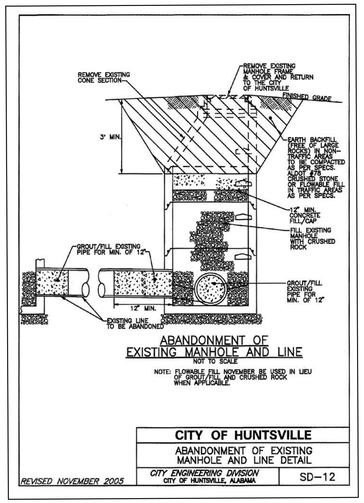

ABANDONMENT OF EXISTING MANHOLE AND LINE
NOT TO SCALE

NOTE: FLOWABLE FILL NOT TO BE USED IN LIEU OF CRUSHED STONE AND CRUSHED ROCK WHEN APPLICABLE.

5/703 ABANDONMENT OF EXISTING MANHOLE AND LINE DETAIL
NOT TO SCALE

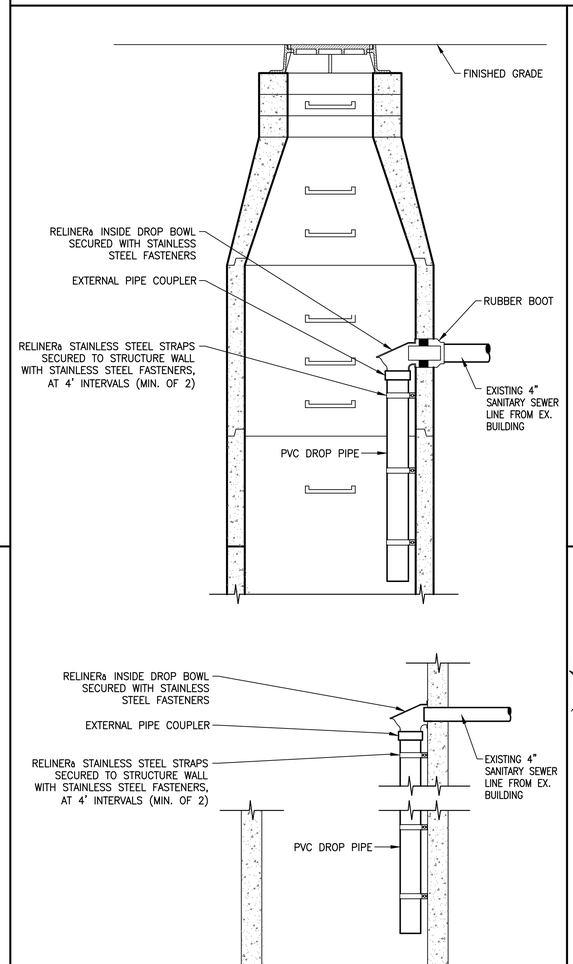

6/703 SANITARY SEWER MANHOLE DROP CONNECTION
NOT TO SCALE

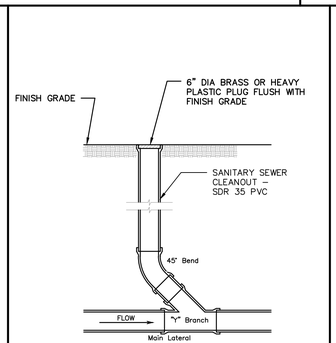

7/703 SANITARY SEWER CLEANOUT DETAIL
NOT TO SCALE

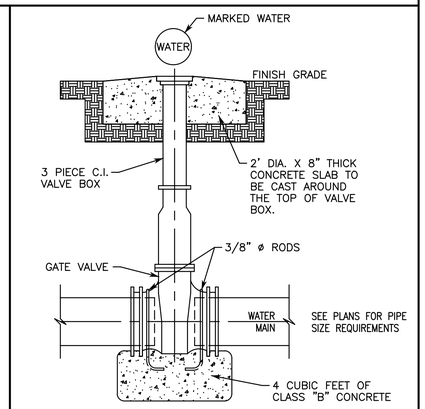

10/703 VALVE BOX DETAIL
NOT TO SCALE

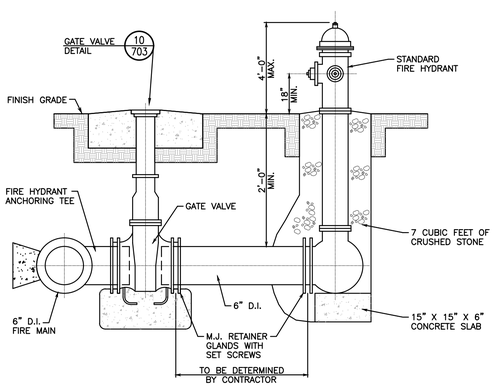

8/703 FIRE HYDRANT ASSEMBLY DETAIL
NOT TO SCALE

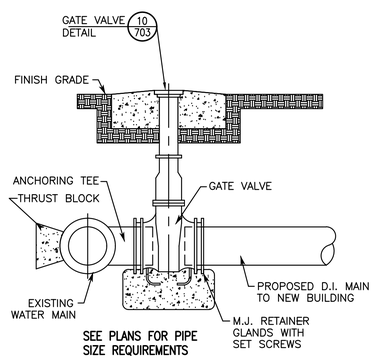

9/703 WATER CONNECTION DETAIL
NOT TO SCALE

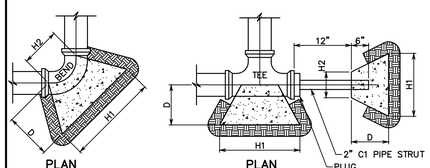

DIMENSIONS BASED ON SOIL BEARING CAPACITY OF 1000 PSF AND WATER PRESSURE OF 150 PSI (100 PSI PLUS 50% FOR WATER HAMMER).

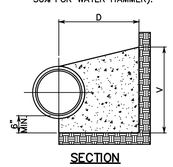

SECTION

PIPE SIZE	11-1/4^ BEND			
	H1	H2	D	V
4"	12"	8"	12"	12"
6"	16"	10"	18"	12"
8"	8"	11"	18"	16"

PIPE SIZE	22-1/2^ BEND			
	H1	H2	D	V
4"	12"	8"	12"	12"
6"	18"	10"	18"	18"
8"	27"	11"	18"	20"

PIPE SIZE	45^ BEND			
	H1	H2	D	V
4"	24"	8"	12"	12"
6"	30"	10"	18"	20"
8"	36"	11"	18"	30"

PIPE SIZE	90^ BEND			
	H1	H2	D	V
4"	24"	12"	12"	24"
6"	36"	16"	18"	30"
8"	48"	18"	18"	36"

PIPE SIZE	TEES & PLUGS			
	H1	H2	D	V
4"	24"	12"	12"	16"
6"	30"	16"	18"	24"
8"	40"	18"	18"	30"

11/703 CONCRETE THRUST BLOCK DETAIL
NOT TO SCALE

JOHNSON & ASSOCIATES
ENGINEERING SURVEYING
1218 CHURCH STREET
HUNTSVILLE, ALABAMA 35801
1-256-533-7331
FAX 1-256-533-7332

ALABAMA PROFESSIONAL ENGINEER
REGISTERED NO. 39843
07/26/2022
GUILLERMO I. REYES

NOLA VANPEURSEM
ARCHITECTS, PC
MEMBER OF THE AMERICAN INSTITUTE OF ARCHITECTS
301 JEFFERSON STREET
HUNTSVILLE, ALABAMA 35801
(256) 533-6617
NVPARCHITECTS.COM

THIS DRAWING MAY NOT BE REPRODUCED IN WHOLE OR IN PART WITHOUT THE CONSENT OF NOLA|VANPEURSEM ARCHITECTS

MADISON COUNTY SCHOOLS

CAREER TECH CENTER
MACHINE SHOP

1275 JORDAN ROAD
HUNTSVILLE, ALABAMA 35811

JOB NUMBER
22256

JSL / GIR / 07/26/2022
DRAWN - CHECKED - DATE

REVISIONS

SHEET TITLE
CONSTRUCTION DETAILS

SHEET NUMBER
C703
OF
13

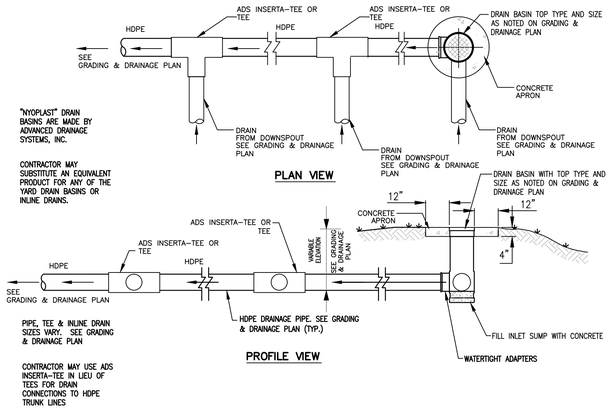

NOTE: INLETS IN SIDEWALKS SHALL BE ADA COMPLIANT

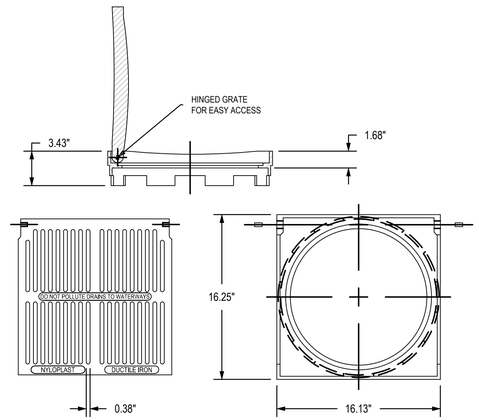

NOTES:
1. SIZE SHOWN IS FOR 15" DIA INLET
2. INLET SIZES VARY - SEE STORM DRAIN PLAN FOR REQUIRED SIZE
3. DIMENSIONS ARE IN INCHES
4. GRATE SHALL MEET H-10 LOAD RATING
5. QUALITY: MATERIALS SHALL CONFORM TO ASTM A536 GRADE 70-50-05
6. PAINT: CASTINGS TO BE FURNISHED WITH A BLACK PAINT
7. SIZE OF OPENING SHALL MEET REQUIREMENTS OF AMERICAN DISABILITY ACT AS STATED IN FEDERAL REGISTER PART III, DEPARTMENT OF JUSTICE, 28 CFR PART 36.

ADS TYPE INLET – PEDESTRIAN GATE

1/704 TYPICAL INSTALLATION OF DRAINAGE PIPE FROM DOWN SPOUTS & ADS TYPE AREA INLETS
NOT TO SCALE

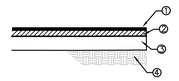

1. 3" NO. 78 STONE
2. PRIME COAT 0.22-0.25 GAL/SY ALDOT 401, REF 3
3. 6" LAYER OF DENSE GRADED AGGREGATE BASE COURSE. ALDOT REF. 301 OF SPECS. ALL MATERIALS SHALL BE IN ACCORDANCE WITH SEC. 820, TYPE "B", COMPACTION TO 100% PROCTOR DENSITY ASTM D698.
4. TOP 10" OF SUBGRADE TO BE COMPACTED TO 100% PROCTOR DENSITY. BELOW 6" IS TO BE COMPACTED TO 95% PROCTOR DENSITY AS DETERMINED BY AASHTO T-99 COMPACTION TEST. SEE SPECIFICATIONS FOR ADDITIONAL INFORMATION.

2/704 GRAVEL DRIVE BUILD-UP
NOT TO SCALE

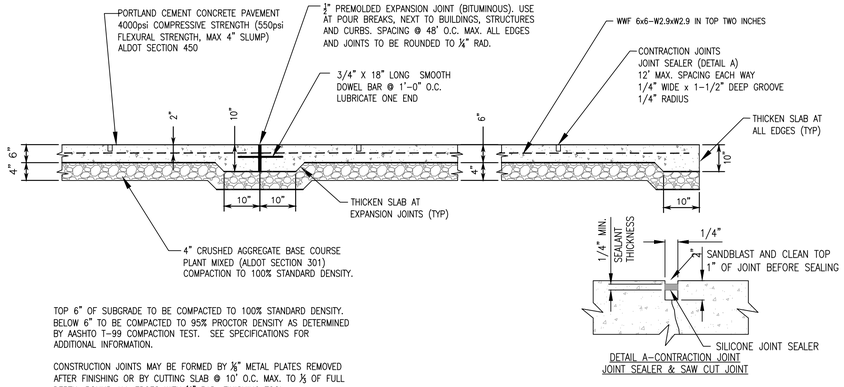

TOP 6" OF SUBGRADE TO BE COMPACTED TO 100% STANDARD DENSITY. BELOW 6" TO BE COMPACTED TO 95% PROCTOR DENSITY AS DETERMINED BY AASHTO T-99 COMPACTION TEST. SEE SPECIFICATIONS FOR ADDITIONAL INFORMATION.

CONSTRUCTION JOINTS MAY BE FORMED BY ⅛" METAL PLATES REMOVED AFTER FINISHING OR BY CUTTING SLAB @ 10' O.C. MAX. TO ⅓ OF FULL DEPTH. ROUND ALL EDGES WITH ¼" RAD. FINISHING TOOL.

3/704 HEAVY DUTY CONCRETE PAVEMENT LONGITUDINAL SECTION
NOT TO SCALE

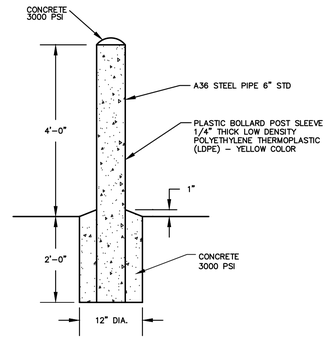

GENERAL NOTES

CONCRETE
ALL CONCRETE SHALL BE 3,000 PSI, 28 DAY COMPRESSIVE STRENGTH.

REINFORCING
ALL REINFORCEMENT SHALL BE DEFORMED BAR, GRADE 60.

4/704 BOLLARD DETAIL
NOT TO SCALE

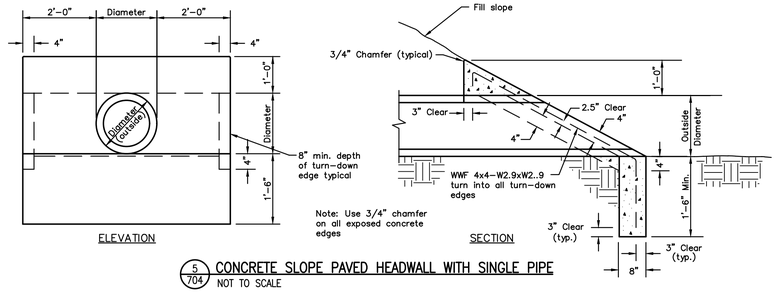

5/704 CONCRETE SLOPE PAVED HEADWALL WITH SINGLE PIPE
NOT TO SCALE

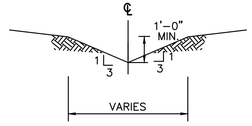

BERMUDA SOLID SOD IS TO BE STAKED DOWN IN THE INVERT AND ALONG THE SIDE SLOPE UP TO THE MINIMUM DEPTH. THE REMAINING SIDE SLOPE CAN BE SEEDED ACCORDING TO THE SEEDING NOTE OR BERMUDA SOLID SOD.

6/704 GRASS SWALE
NOT TO SCALE

JOHNSON & ASSOCIATES
ENGINEERING SURVEYING
1218 CHURCH STREET
HUNTSVILLE, ALABAMA 35801
1-256-533-7331
FAX 1-256-533-7332

ALABAMA PROFESSIONAL
07/26/2022
REGISTERED NO. 30843
ENGINEER
JEREMY L. REED

NOLA VANPEURSEM
ARCHITECTS, PC
MEMBER OF THE AMERICAN INSTITUTE OF ARCHITECTS
301 JEFFERSON STREET
HUNTSVILLE, ALABAMA 35801
(256) 533-6617
NVPARCHITECTS.COM

THIS DRAWING MAY NOT BE REPRODUCED IN WHOLE OR IN PART WITHOUT THE CONSENT OF NOLA|VANPEURSEM ARCHITECTS

MADISON COUNTY SCHOOLS

CAREER TECH CENTER
MACHINE SHOP

1275 JORDAN ROAD
HUNTSVILLE, ALABAMA 35811

JOB NUMBER
22256

JSL / GIR / 07/26/2022
DRAWN - CHECKED - DATE

REVISIONS

SHEET TITLE
CONSTRUCTION DETAILS

SHEET NUMBER
C704
OF
13

FIRE RATING LEGEND

NON - RATED WALL ASSEMBLY

TWO - HOUR RATED WALL ASSEMBLY

GENERAL NOTES

1. ALL METAL STUD WALLS SHALL HAVE BATT INSULATION, FULL HEIGHT OF WALL.
2. FIRE RATING SHALL CONTINUE ACROSS DOOR HEADERS.
3. INSTALL METAL LINER PANELS UP TO 8'-0" A.F.F. IN THE MACHINE SHOP AREA.

WALL TYPES

(1.) 3-5/8" METAL STUDS @16" OC. WITH 1 LAYER 5/8" GYP. BD. EACH SIDE. EXTEND TO BOTTOM OF STRUCTURAL DECK OR RATED ASSEMBLY. (PROVIDE 2 LAYERS 5/8" GYP. BD. EACH SIDE FOR 2-HR. RATED WALLS)

(2.) 3-5/8" METAL STUDS @16" OC. WITH 1 LAYER 5/8" GYP. BD. EACH SIDE. TOP OF WALL 4" MIN. ABOVE HIGHEST ADJACENT CEILING HEIGHT. BRACE TO STRUCTURE WHERE REQUIRED.

(3.) 3-5/8" METAL STUDS @16" OC. WITH 1 LAYER 5/8" GYP. BD. ONE SIDE W/ FRP BOARD OVER (FIXTURE SIDE WHERE APPLICABLE). TOP OF WALL 4" MIN. ABOVE HIGHEST ADJACENT CEILING HEIGHT. BRACE TO STRUCTURE WHERE REQUIRED.

(4.) 8" METAL STUDS @16" OC. WITH 1 LAYER 5/8" GYP. BD. EACH SIDE. EXTEND TO BOTTOM OF STRUCTURAL DECK OR RATED ASSEMBLY.

(5.) 8" METAL STUDS @16" OC. WITH 1 LAYER 5/8" GYP. BD. EACH SIDE. TOP OF WALL 4" MIN. ABOVE HIGHEST ADJACENT CEILING HEIGHT. BRACE TO STRUCTURE WHERE REQUIRED.

NOTE: SEE ROOM FINISH SCHEDULE FOR WALL FINISH.

TABLE 2902.1 MINIMUM NUMBER OF REQUIRED PLUMBING FACILITIES

Educational Areas (Shop or Vocational Areas):
Occupant Load = 100 (50 male, 50 female)

	Male WC 1/50	Female WC 1/50	Lavatories 1/50	DF 1/100	Utility Sinks
Required	1	1	2	1	1

TOTALS:

	Male WC	Female WC	Lavatories	DF	Utility Sinks
Total Provided	1	1	2	1	1

BUILDING 1

OCCUPANCY GROUP: EDUCATIONAL GROUP E - 1 STORY
CONSTRUCTION TYPE: IIB, UNPROTECTED, UNSPRINKLERED

ALLOWABLE HEIGHT (PER TABLE 504.4) = 2-STORY
ACTUAL HEIGHT = 1-STORY

ALLOWABLE BUILDING AREA (PER TABLE 506.2) = 14,500 S.F.

TOTAL ACTUAL NET BUILDING AREA = 5,755 S.F.

TOTAL OCCUPANT LOAD: 100

TYPICAL DESIGN CRITERIA FOR OCCUPANCY TYPE E

- PER IBC TABLE 601, REQUIRED FIRE RESISTANCE RATING FOR BUILDING ELEMENTS FOR TYPE IIB = 0
- PER IBC TABLE 1017.2, ALLOWABLE EXIT ACCESS TRAVEL DISTANCE = 200'
- PER IBC TABLE 1020.1, CORRIDOR RATING (WITHOUT SPRINKLER) = 1 HOUR
- PER IBC 1020.2, MIN. CORRIDOR WIDTH FOR GROUP E WITH CAPACITY OVER 100 = 72"
- PER IBC 1020.4, MAX. LENGTH OF DEAD-END CORRIDOR = 20', EXCEPT WHERE EXCEPTION 3 (LENGTH IS LESS THAN 2.5 TIMES THE LEAST WIDTH OF THE CORRIDOR APPLIES

APPLICABLE BUILDING CODES

- INTERNATIONAL BUILDING CODE - 2015 EDITION
- ADA STANDARDS FOR ACCESSIBLE DESIGN - 2010 EDITION
- INTERNATIONAL FUEL GAS CODE - 2015 EDITION
- INTERNATIONAL PLUMBING CODE - 2015 EDITION
- INTERNATIONAL MECHANICAL CODE - 2015 EDITION
- INTERNATIONAL ELECTRICAL CODE - 2014 EDITION
- INTERNATIONAL FIRE CODE - 2015 EDITION
- ACC/NSSA STANDARD FOR THE DESIGN & CONSTRUCTION OF STORM SHELTERS - 2014 EDITION
- ANSI/ASHRAE STANDARDS 90.1 - 2013 ENERGY STANDARD

OVERALL SQUARE FOOTAGE

TOTAL BUILDING AREA = 5,755 S.F.

LIFE SAFETY LEGEND

= 1-HOUR FIRE SEPARATION

= 2-HOUR FIRE SEPERATION
CMU WALLS: EQUIV. TO UL #U905
STUD WALLS: EQUIV. TO UL #U419

XXX = OCCUPANT LOAD PER TABLE 1004.1.1

XXX = AGGREGATE OCCUPANT LOAD CALCULATION

XXX = MEANS OF EGRESS CAPACITY

E = EXIT

= LIGHTED EXIT SIGN

XX' MAX TRAVEL DISTANCE = EXIT ACCESS TRAVEL DISTANCE (200' MAX. FOR UNSPRINKLERED BUILDINGS)

FE = FIRE EXTINGUISHER

= EYEWASH & SAFETY SHOWER

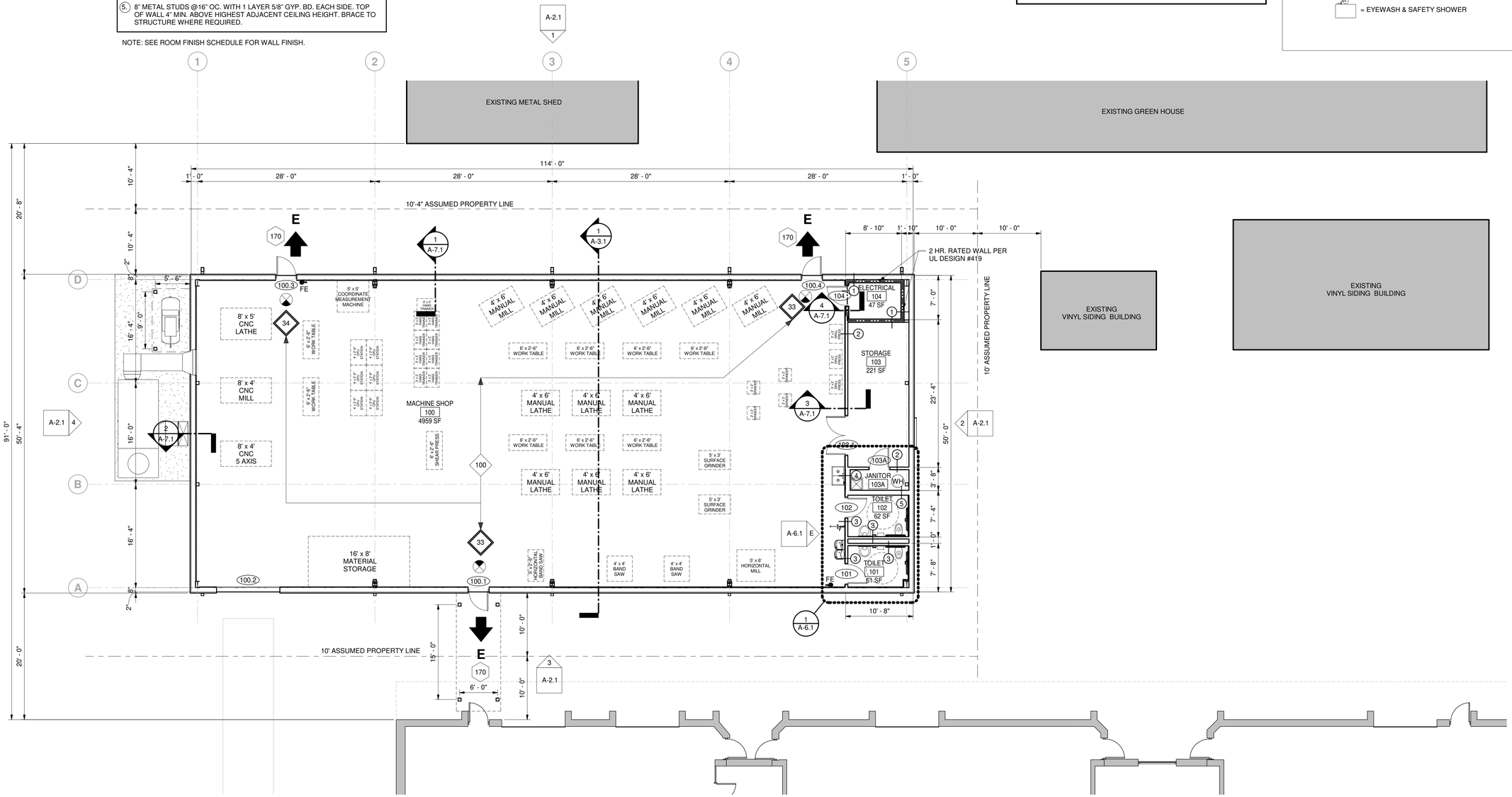

1 A-1.1 FLOOR PLAN
1/8" = 1'-0"
NORTH

STATE OF ALABAMA
FRANK J. NOLA JR.
3871
REG. NO.
3535
ROBERT VAN PEURSEM
REGISTERED ARCHITECTS

NOLA VANPEURSEM ARCHITECTS, PC
MEMBER OF THE AMERICAN INSTITUTE OF ARCHITECTS
301 JEFFERSON STREET
HUNTSVILLE, ALABAMA 35801
(256) 533-6617
NVPARCHITECTS.COM

THIS DRAWING MAY NOT BE REPRODUCED IN WHOLE OR IN PART WITHOUT THE CONSENT OF NOLA|VANPEURSEM ARCHITECTS

MADISON COUNTY SCHOOLS

CAREER TECH CENTER
MACHINE SHOP

1275 JORDAN ROAD
HUNTSVILLE, ALABAMA 35811

JOB NUMBER
22256

REK / FJN / 07/26/2022
DRAWN - CHECKED - DATE

REVISIONS

No.	Description	Date

SHEET TITLE
FIRST FLOOR PLAN

SHEET NUMBER
A-1.1
OF

7/26/2022 3:51:04 PM G:\active jobs\Schools\Madison County Schools\Career Tech Building\Revit\MCS Career Tech Building.rvt

Design No. U419
Non-Bearing Wall Ratings -- 1, 2, 3 or 4 Hr (See Items 3 & 4)

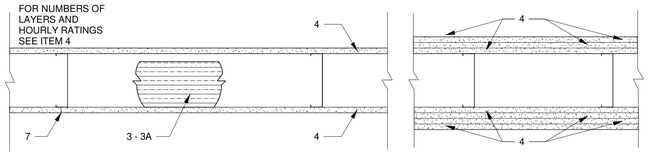

1 **Floor and Ceiling Runners** (Not shown) -- Channel shaped, fabricated from min 25 MSG (min 20 MSG when Item 4A is used) corrosion-protected steel, min width to accommodate stud size, with min 1 in. long legs, attached to floor and ceiling with fasteners 24 in. OC max.

2. **Steel Studs** Channel shaped, fabricated from min 25 MSG (min 20 MSG when Item 4A is used) corrosion-protected steel, min width as indicated under Item 4, min 1-1/4 in. flanges and 1/4 in. return, spaced a max of 24 in. OC. Studs to be cut 3/8 to 3/4 in. less than assembly height.

3. **Batts and Blankets*** (Required as indicated under Item 4) -- Mineral wool batts, friction fitted between studs and runners. Min nom thickness as indicated under Item 4. See **Batts and Blankets (BKNV or BZJZ) Categories** for names of Classified companies.

3A. **Batts and Blankets*** (Optional) -- Placed in stud cavities, any glass fiber or mineral wool insulation bearing the UL Classification Marking as to Surface Burning Characteristics and/or Fire Resistance. See **Batts and Blankets (BKNV or BZJZ) Categories** for names of Classified companies.

4. --

Gypsum Board* Gypsum panels with beveled, square or tapered edges, applied vertically or horizontally. Vertical joints centered over studs and staggered one stud cavity on opposite sides of studs. Vertical joints in adjacent layers (multilayer systems) staggered one stud cavity. Horizontal joints need not be backed by steel framing. Horizontal edge joints and horizontal butt joints on opposite sides of studs need not be staggered. Horizontal edge joints and horizontal butt joints in adjacent layers (multilayer systems) staggered a min of 12 in. The thickness and number of layers for the 1 hr, 2 hr, 3 hr and 4 hr ratings are as follows:

Wallboard Protection on Each Side of Wall

Rating	Min Stud Depth	No. of Layers & Thkns of Panel	Min Thkns of Insulation (Item 3)
1	3-1/2	1 layer, 5/8 in. thick	Optional
1	2-1/2	1 layer, 1/2 in. thick	1-1/2 in.
1	1-5/8	1 layer, 3/4 in. thick	Optional
2	1-5/8	2 layers, 1/2 in. thick	Optional
2	1-5/8	2 layers, 5/8 in. thick	Optional
2	3-1/2	1 layer, 3/4 in. thick	3 in.
3	1-5/8	3 layers, 1/2 in. thick	Optional
3	1-5/8	2 layers, 3/4 in. thick	Optional
3	1-5/8	3 layers, 5/8 in. thick	Optional
4	1-5/8	4 layers, 5/8 in. thick	Optional
4	1-5/8	4 layers, 1/2 in. thick	Optional
4	2-1/2	2 layers, 3/4 in. thick	2 in.

CANADIAN GYPSUM COMPANY -- 1/2 in. thick Type C, IP-X2 or IPC-AR; WRC, 5/8 in. thick Type AR, C, IP-AR, IP-X1, IP-X2, IPC-AR, SCX, SHX, WRX or WRC; 3/4 in. thick Type IP-X3, ULTRACODE, ULTRACODE SHC or ULTRACODE WRC.

UNITED STATES GYPSUM CO -- 1/2 in. thick Type C, IP-X2, IPC-AR or WRC; 5/8 in. thick Type SCX, SHX, WRX, IP-X1, AR, C, WRC, FRX-G, IP-AR, IP-X2, IPC-AR ; 3/4 in. thick Type IP-X3, ULTRACODE, ULTRACODE SHC or ULTRACODE WRC.

4A. **USG MEXICO S A DE C V** -- 1/2 in. thick Type C, IP-X2, IPC-AR or WRC; 5/8 in. thick Type AR, C, IP-AR, IP-X1, IP-X2, IPC-AR, SCX, SHX, WRX, WRC or; 3/4 in. thick Type IP-X3, ULTRACODE, ULTRACODE SHC or ULTRACODE WRC.

Gypsum Board* (As an alternate to Item 4) -- 5/8 in. thick gypsum panels, installed as described in Item 4 with Type S-12 steel screws. The length and spacing of the screws as specified under Item 5.

4B. **CANADIAN GYPSUM COMPANY** -- Type FRX
UNITED STATES GYPSUM CO -- Type FRX

Gypsum Board* (As an alternate to Items 4 and 4A) -- 5/8 in. thick, 2 ft. wide, tongue and groove edge, applied horizontally as the outer layer to one side of the assembly. Secured as described in Item 5. Joint covering (Item 7) not required.

5. **CANADIAN GYPSUM COMPANY** -- Type SHX.
UNITED STATES GYPSUM CO -- Type SHX.
USG MEXICO S A DE C V -- Type SHX.

Fasteners (Not shown) -- Type S or S-12 steel screws used to attach panels to studs (Item 2) or furring channels (Item 6). **Single layer systems:** 1 in. long for 1/2 and 5/8 in. thick panels or 1-1/4 in. long for 3/4 in. thick panels, spaced 8 in. OC when panels are applied horizontally, or 8 in. OC along vertical and bottom edges and 12 in. OC in the field when panels are applied vertically. Two layer systems: First layer- 1 in. long for 1/2 and 5/8 in. thick panels or 1-1/4 in. long for 3/4 in. thick panels, spaced 16 in. OC. Second layer- 1-5/8 in. long for 1/2 in., 5/8 in. thick panels or 2-1/4 in. long for 3/4 in. thick panels, spaced 16 in. OC with screws offset 8 in. from first layer. **Three-layer systems:** First layer- 1 in. long for 1/2 in., 5/8 in. thick panels, spaced 24 in. OC. Second layer- 1-5/8 in. long for 1/2 in., 5/8 in. thick panels, spaced 24 in. OC. Third layer- 2-1/4 in. long for 1/2 in., 5/8 in. thick panels or 2-5/8 in. long for 5/8 in. thick panels, spaced 12 in. OC. Screws offset min 6 in. from layer below.

6. **Four-layer systems:** First layer- 1 in. long for 1/2 in., 5/8 in. thick panels, spaced 24 in. OC. Second layer- 1-5/8 in. long for 1/2 in., 5/8 in. thick panels, spaced 24 in. OC. Third layer- 2-1/4 in. long for 1/2 in. thick panels or 2-5/8 in. long for 5/8 in. thick panels, spaced 24 in. OC. Fourth layer- 2-5/8 in. long for 1/2 in. thick panels or 3 in. long for 5/8 in. thick panels, spaced 12 in. OC. Screws offset min 6 in. from layer below.

7. **Furring Channels** (Optional, not shown, for single or double layer systems) -- Resilient furring channels fabricated from min 25 MSG corrosion-protected steel, spaced vertically a max of 24 in. OC. Flange portion attached to each intersecting stud with 1/2 in. long Type S-12 steel screws. Not for use with Item 4A.

8. **Joint Tape and Compound** Vinyl or casein, dry or premixed joint compound applied in two coats to joints and screw heads of outer layers. Paper tape, nom 2 in. wide, embedded in first layer of compound over all joints of outer layer panels. Paper tape and joint compound may be omitted when gypsum panels are supplied with a square edge.

9. **Siding, Brick or Stucco** (Optional, not shown) -- Aluminum, vinyl or steel siding, brick veneer or stucco, meeting the requirements of local code agencies, installed over gypsum panels. Brick veneer attached to studs with corrugated metal wall ties attached to each stud with steel screws, not more than each sixth course of brick.

Caulking and Sealants* (Optional, not shown) -- A bead of acoustical sealant applied around the partition perimeter for sound control.

UNITED STATES GYPSUM CO -- Type AS

*Bearing the UL Classification Mark

4 A-1.2 UL #U419 - GYPSUM BOARD & METAL STUD ASSEMBLY @ 1 OR 2-HR. RATED WALLS
1 1/2" = 1'-0"

Horizontal Shaftwall Duct and Ceiling Assemblies

09 21 16.23/NGC

DESCRIPTION

I-Stud Cavity Shaftwall Systems can be erected horizontally and used as economical fire resistive assemblies for corridor ceilings, stair soffits, and protection for mechanical ducts.

The I-Stud Cavity Shaftwall System for Horizontal Duct Protection consists of I-Studs 24" o.c. with 1" Fire-Shield Shaftliner panels inserted in the stud tabs, and three layers of 1/2" Fire-Shield C Gypsum Board attached to the stud flanges opposite the Shaftliner panels. This System provides fire protection for mechanical ducts and has been tested from both sides.

Two layers of 1/2" Fire-Shield C Gypsum Board attached to the stud flanges opposite the Shaftliner provide 2-hour fire protection when used as a corridor ceiling or stair soffit.*

Similarly, single layer 5/8" Fire-Shield or Fire-Shield C Gypsum Board attached to the stud flanges opposite the Shaftliner panels provide 1-hour fire protection when used as a corridor ceiling or stair soffit.*

LIMITATIONS

I-Stud Cavity Shaftwall Systems erected horizontally for corridor ceilings or stair soffits are designed to carry their own deadweight only, and should not be used where there is access to an attic or loft above, or any probability of storage.

In addition, the 2-hour horizontal duct protection system is not designed to carry live loads or the weight of the mechanical ducting it is protecting.

Maximum allowable horizontal spans of each system are shown in the table below.

DETAILS

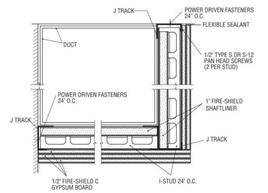

TWO HOUR HORIZONTAL DUCT PROTECTION
WHI 694-0300.1
09/09/09
Scale: 2" = 1'-0"

TECHNICAL DATA

MAXIMUM HORIZONTAL SPANS FOR I-STUD ASSEMBLIES

Stud Size in. (mm)	Minimum Steel Thickness in. (mm)	Corridor Ceilings And Stair Soffits: 1-Hour Fire Resistive Rating	Corridor Ceilings And Stair Soffits: 2-Hour Fire Resistive Rating	Horizontal Membrane And Duct Protection: 2-Hour Fire Resistive Rating
2 1/2" (63.5 mm)	0.020 (.508)	7'-8" (2337 mm)	7'-8" (2337 mm)	7'-2" (2184 mm)
2 1/2" (63.5 mm)	0.0329 (.836)	8'-8" (2642 mm)	9'-4" (2845 mm)	8'-8" (2642 mm)
4" (102 mm)	0.020 (.508)	10'-3" (3124 mm)	10'-9" (3277 mm)	10'-0" (3048 mm)
4" (102 mm)	0.0329 (.836)	11'- 9" (3581 mm)	12'-1" (3683 mm)	11'-3" (3429 mm)
6" (152 mm)	0.0329 (.836)	14'- 10" (4521 mm)	14'-10" (4521 mm)	13'-10" (4216 mm)

09 21 16.23

Note: Spans based on L/240 deflection and twice the dead load weight, and 24" o.c. stud spacing.

DETAILS

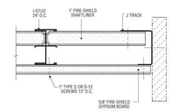

ONE HOUR HORIZONTAL SHAFTWALL-CORRIDOR CEILING AND STAIR SOFFIT*
09/09/09
Scale: 2" = 1'-0"

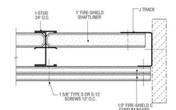

TWO HOUR CORRIDOR CEILING AND STAIR SOFFIT*
09/09/09
Scale: 2" = 1'-0"

*See ICBO Evaluation Services, Inc. Evaluation Report No. 3579 for allowable values and/or conditions of use concerning material presented in this document. It's subject to re-examinations, revisions, and possible cancellations.

1 A-1.2 NGC 09 21 16.23
NOT TO SCALE

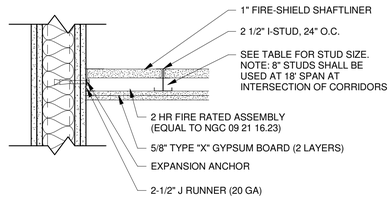

2 A-1.2 NGC 09 21 16.23 - 2 HR FIRE RATED ASSEMBLY (ELECTRICAL ROOM)
1 1/2" = 1'-0"

STATE OF ALABAMA
FRANK J. NOLA JR.
3871
REG. NO.
ROBERT VAN PEURSEM
3535
REGISTERED ARCHITECTS

NOLA VANPEURSEM ARCHITECTS, PC
MEMBER OF THE AMERICAN INSTITUTE OF ARCHITECTS
301 JEFFERSON STREET
HUNTSVILLE, ALABAMA 35801
(256) 533-6617
NVPARCHITECTS.COM

THIS DRAWING MAY NOT BE REPRODUCED IN WHOLE OR IN PART WITHOUT THE CONSENT OF NOLA|VANPEURSEM ARCHITECTS

MADISON COUNTY SCHOOLS

CAREER TECH CENTER
MACHINE SHOP

1275 JORDAN ROAD
HUNTSVILLE, ALABAMA 35811

JOB NUMBER
22256

REK / FJN / 07/26/2022
DRAWN · CHECKED · DATE

REVISIONS
No. Description Date

SHEET TITLE
UL DETAILS

SHEET NUMBER
A-1.2
OF

7/26/2022 3:51:05 PM G:\active jobs\Schools\Madison County Schools\Career Tech Building\Revit\MCS Career Tech Building.rvt

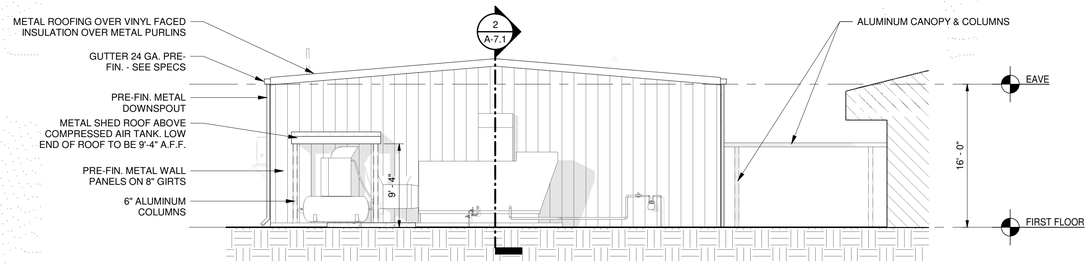

4 A-2.1 **WEST ELEVATION**
1/8" = 1'-0"

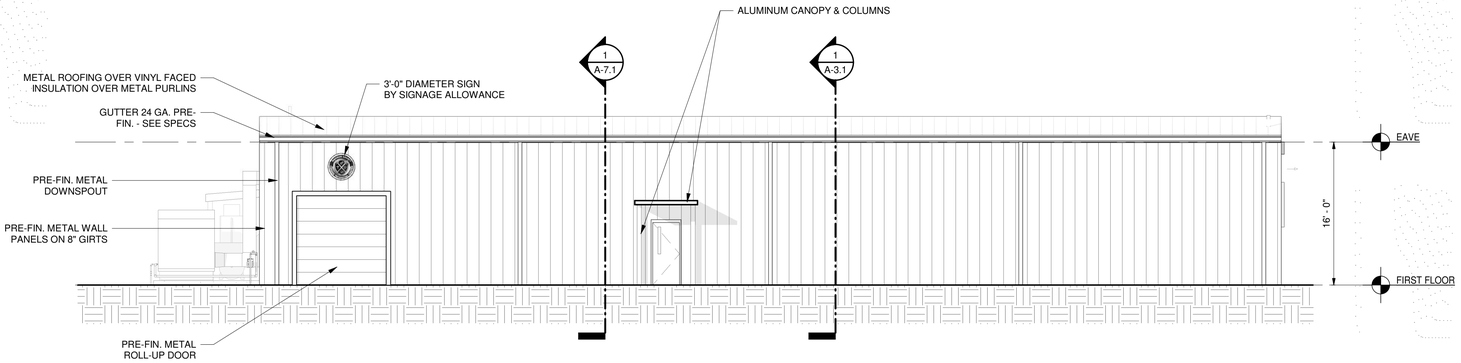

3 A-2.1 **SOUTH ELEVATION**
1/8" = 1'-0"

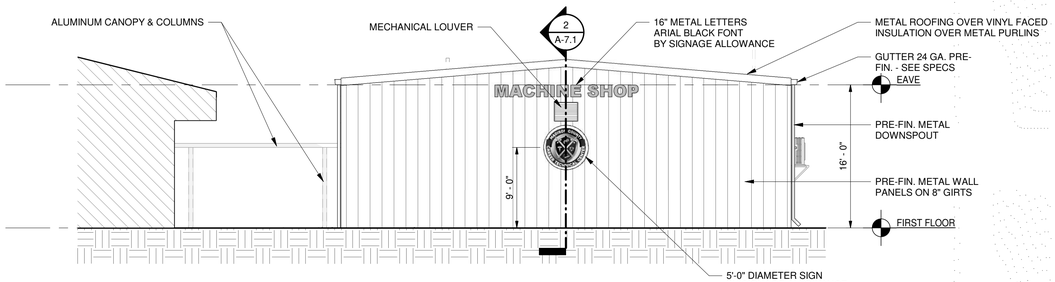

2 A-2.1 **EAST ELEVATION**
1/8" = 1'-0"

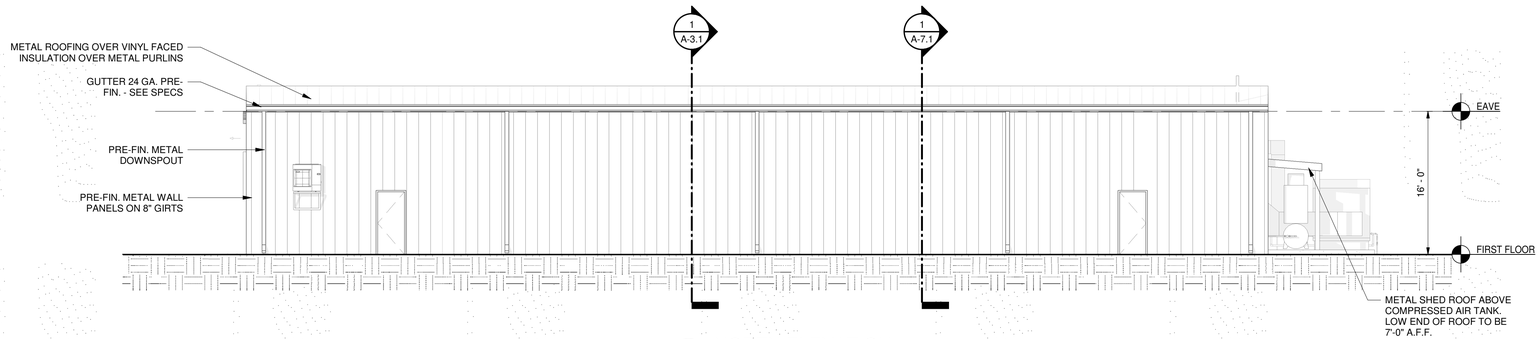

1 A-2.1 **NORTH ELEVATION**
1/8" = 1'-0"

STATE OF ALABAMA
FRANK J. NOLA III
3871
REG. NO.
3535
ROBERT VAN PEURSEM
REGISTERED ARCHITECTS

NOLA VANPEURSEM
ARCHITECTS, PC
MEMBER OF THE AMERICAN INSTITUTE OF ARCHITECTS
301 JEFFERSON STREET
HUNTSVILLE, ALABAMA 35801
(256) 533-6617
NVPARCHITECTS.COM

THIS DRAWING MAY NOT BE REPRODUCED IN WHOLE OR IN PART WITHOUT THE CONSENT OF NOLA|VANPEURSEM ARCHITECTS

MADISON COUNTY SCHOOLS

CAREER TECH CENTER
MACHINE SHOP

1275 JORDAN ROAD
HUNTSVILLE, ALABAMA 35811

JOB NUMBER
22256

REK	FJN	07/26/2022
DRAWN	CHECKED	DATE

REVISIONS

No.	Description	Date

SHEET TITLE
EXTERIOR BUILDING ELEVATIONS

SHEET NUMBER
A-2.1
OF

7/26/2022 3:51:09 PM G:\active jobs\Schools\Madison County Schools\Career Tech Building\Revit\MCS Career Tech Building.rvt

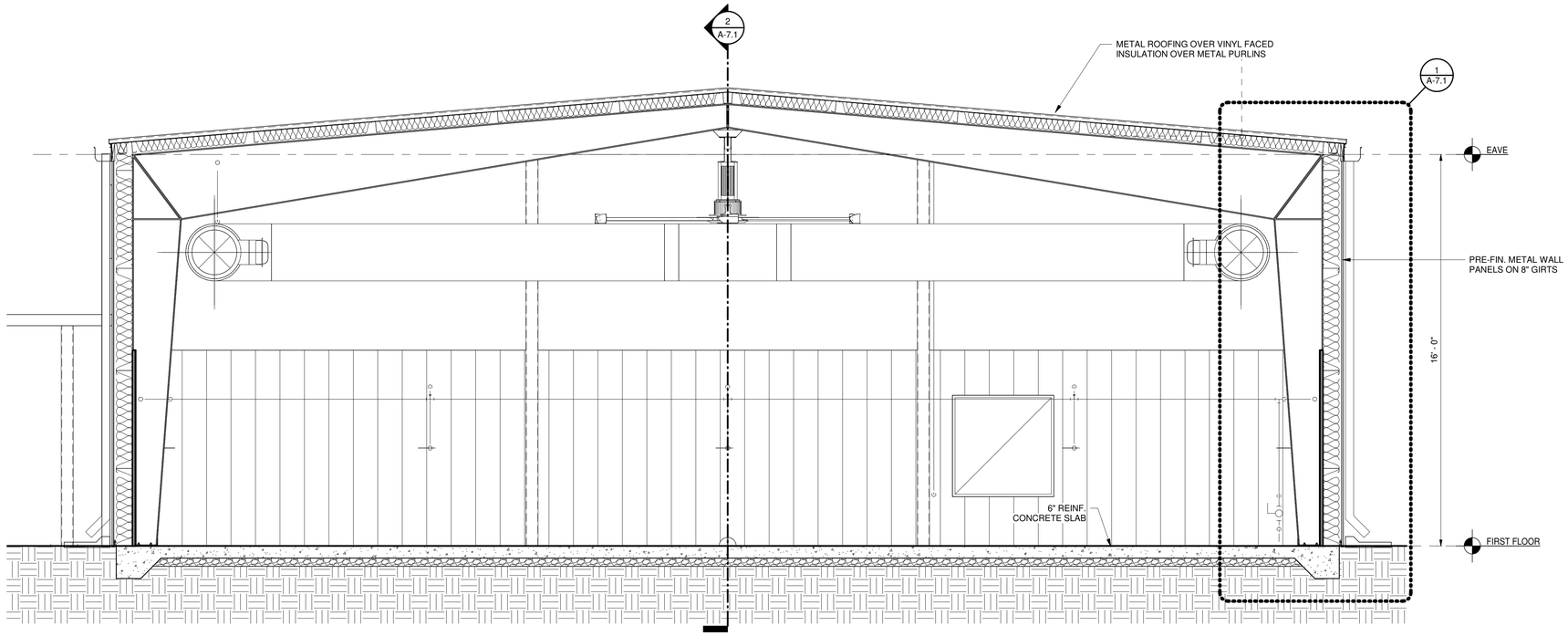

1 A-3.1 BUILDING SECTION
3/8" = 1'-0"

7/26/2022 3:51:10 PM G:\active jobs\Schools\Madison County Schools\Career Tech Building\Revit\MCS Career Tech Building.rvt

STATE OF ALABAMA
FRANK J. NOLA JR
3871
REG. NO.
3535
ROBERT VAN PEURSEM
REGISTERED ARCHITECTS

NOLA VANPEURSEM
ARCHITECTS, PC
MEMBER OF THE AMERICAN INSTITUTE OF ARCHITECTS
301 JEFFERSON STREET
HUNTSVILLE, ALABAMA 35801
(256) 533-6617
NVPARCHITECTS.COM

THIS DRAWING MAY NOT BE REPRODUCED IN WHOLE OR IN PART WITHOUT THE CONSENT OF NOLA\VANPEURSEM ARCHITECTS

MADISON COUNTY SCHOOLS
CAREER TECH CENTER
MACHINE SHOP
1275 JORDAN ROAD
HUNTSVILLE, ALABAMA 35811

JOB NUMBER
22256

REK / FJN / 07/26/2022
DRAWN - CHECKED - DATE

REVISIONS
No. Description Date

SHEET TITLE
BUILDING CROSS SECTIONS

SHEET NUMBER
A-3.1
OF

ROOM FINISH SCHEDULE

ROOM NO.	ROOM NAME	FLOOR COVERING	FLOOR BASE	NORTH WALLS	EAST WALLS	SOUTH WALLS	WEST WALLS	CEILING FINISH	CEILING HEIGHT	REMARKS
100	MACHINE SHOP	CONC	-	L. PANEL	L. PANEL / GBP	L. PANEL	L. PANEL	STRUCT	-	
101	TOILET	CONC	RUBBER	FRP	FRP	FRP	FRP	AC2	9'-0"	ALUMINUM CEILING GRID
102	TOILET	CONC	RUBBER	FRP	FRP	FRP	FRP	AC2	9'-0"	ALUMINUM CEILING GRID
103	STORAGE	CONC	RUBBER	GBP	GBP	GBP	GBP	AC2	9'-0"	ALUMINUM CEILING GRID
103A	JANITOR	CONC	RUBBER	GBP	GBP	GBP	GBP	AC2	9'-0"	ALUMINUM CEILING GRID
104	ELECTRICAL	CONC	RUBBER	GBP	GBP	GBP	GBP	GBP	10'-0"	

LEGEND

AC #	SUSPENDED ACOUSTIC TILE (# - SEE SPECIFICATIONS)
CONC	CONCRETE WITH FINISH SEALER APPLIED
FRP	FIBERGLASS-REINFORCED POLYMER BOARD
GBP	GYPSUM BOARD PAINTED
L. PANEL	LINER PANEL, PREFINISHED
PAINT	PAINT EXPOSED METAL STRUCTURE, DUCTS, CONDUIT, ETC.
STRUCT	EXPOSED STRUCTURE

ROOM FINISH NOTES:
1. CEILING HEIGHTS NOTED ARE A.F.F. (ABOVE FINISH FLOOR ELEVATION)
2. SEE REFLECTED CEILING PLANS FOR LOCATIONS AND HEIGHTS OF FURRED CEILINGS.
3. SEE ENLARGED RESTROOM PLANS AND ELEVATIONS FOR FURTHER INFORMATION REGARDING FINISHES AT RESTROOMS.
4. PROVIDE BATT INSULATION IN ALL STUD WALLS. BATT INSULATION IN STUD WALLS SHALL EXTEND UP TO 4" ABOVE CEILING HEIGHT - TYPICAL.
5. ALL HOLLOW METAL DOORS AND FRAMES SHALL BE PAINTED.
6. ALL EXPOSED METAL STRUCTURE, DUCTWORK AND CONDUIT SHALL BE PAINTED.
7. AT ROOMS WITH NO BASE, WALL PAINT SHALL EXTEND ALL THE WAY TO THE FLOOR.
8. AT ROOMS WITH NO FINISHED CEILING (EXP. STRUCTURE), BUT PAINTED WALLS, ENTIRE HEIGHT OF WALL SHALL BE PAINTED.
9. CONCRETE SHALL BE COMPLETELY CLEAN OF ANY DIRT, MUD OR CONSTRUCTION DEBRIS PRIOR TO SEALING.

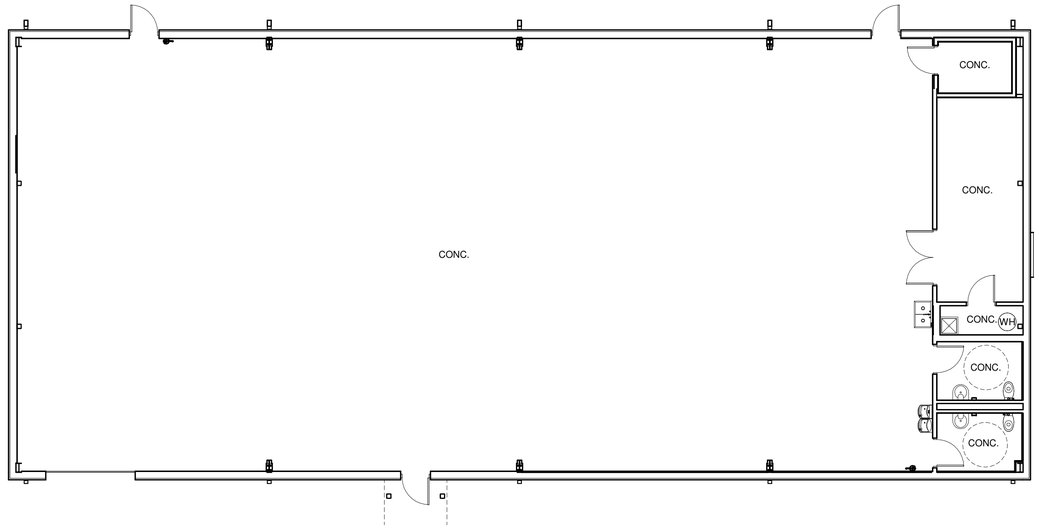

1 A-4.1 FLOOR FINISH PLAN
1/8" = 1'-0"

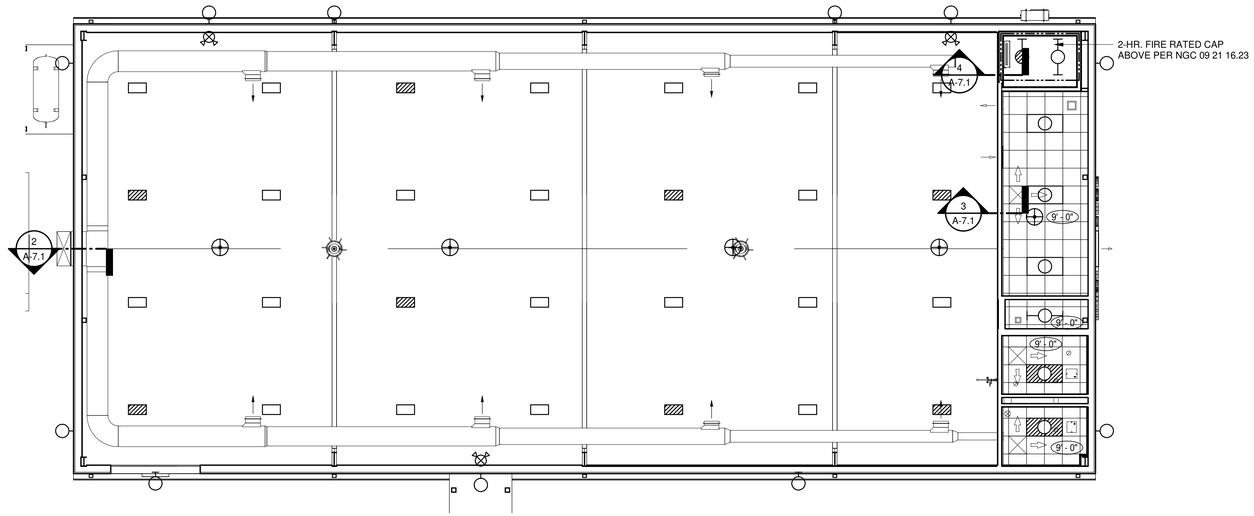

2 A-4.1 REFLECTED CEILING PLAN
1/8" = 1'-0"

STATE OF ALABAMA
FRANK J. NOLA JR.
3871
REG. NO.
3535
ROBERT VAN PEURSEM
REGISTERED ARCHITECTS

NOLA VANPEURSEM ARCHITECTS, PC
MEMBER OF THE AMERICAN INSTITUTE OF ARCHITECTS
301 JEFFERSON STREET
HUNTSVILLE, ALABAMA 35801
(256) 533-6617
NVPARCHITECTS.COM

THIS DRAWING MAY NOT BE REPRODUCED IN WHOLE OR IN PART WITHOUT THE CONSENT OF NOLA\VANPEURSEM ARCHITECTS

MADISON COUNTY SCHOOLS

CAREER TECH CENTER
MACHINE SHOP

1275 JORDAN ROAD
HUNTSVILLE, ALABAMA 35811

JOB NUMBER
22256

REK	FJN	07/26/2022
DRAWN	CHECKED	DATE

REVISIONS

No.	Description	Date

SHEET TITLE
ROOM FINISH SCHEDULE

SHEET NUMBER
A-4.1
OF

7/26/2022 3:51:11 PM G:\active jobs\Schools\Madison County Schools\Career Tech Building\Revit\MCS Career Tech Building.rvt



TYPE A (6" x 6")



TYPE B (WOMEN) 7" x 9"



TYPE C (MEN) 7" x 9"

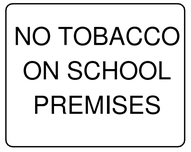

TYPE D (8" x 10") PROVIDE 1 COORDINATE LOCATION WITH ARCHITECT

SIGNAGE NOTES

1. TYPE "A" SIGNS SHALL HAVE A MINIMUM OF 4 DIGIT NUMBERS & 10 CHARACTER NAMES
2. ALL SIGNS TO COMPLY WITH ADAAG PER ADA 703, SIGNS SHALL BE MOUNTED AS FOLLOWS: 60" MAX TO BOTTOM OF HIGHEST TEXT AND 48" MIN TO BOTTOM OF LOWEST TEXT.
3. ALL SIGNS TO BE MECHANICALLY FASTENED W/ TAMPER PROOF FASTENERS AT ALL FOUR CORNERS.
4. NUMBERING ON DOOR SIGNS TO MATCH ROOM NUMBERING SHOWN ON FLOOR PLANS. VERIFY FINAL NUMBERING.

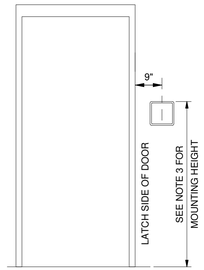

TYPICAL MOUNTING LOCATION FOR SIGNS

SCALE: 1/2" = 1'-0"

1 A-5.1 DOOR & DIRECTIONAL SIGN DETAILS

3" = 1'-0"

DOOR SCHEDULE

DOOR NO.	LOCATION FROM ROOM	LOCATION TO ROOM	H.W. SET	DOOR TYPE	DOOR WIDTH	DOOR HEIGHT	DOOR THK	DOOR MATL	DOOR FINISH	FRAME ELEV	DETAILS HEAD	DETAILS JAMB	DETAILS SILL	FIRE RATING	DOOR SIGN	COMMENTS
FIRST FLOOR																
100.1	MACHINE SHOP	EXTERIOR	1.0	B	3' - 0"	7' - 0"	0' - 1 3/4"	MTL/GL	PAINT	HM1	1	2	7	-	-	CAL
100.2	MACHINE SHOP	EXTERIOR	7.0	D	10' - 0"	10' - 0"	0' - 1 1/2"	ROLL UP	MANUF	MANUF	3	4	-	-	-	
100.3	MACHINE SHOP	EXTERIOR	2.0	A	3' - 0"	7' - 0"	0' - 1 3/4"	METAL	PAINT	HM1	1	2	7	-	-	
100.4	MACHINE SHOP	EXTERIOR	2.0	A	3' - 0"	7' - 0"	0' - 1 3/4"	METAL	PAINT	HM1	1	2	7	-	-	
101	MACHINE SHOP	TOILET	3.0	A	3' - 0"	7' - 0"	0' - 1 3/4"	METAL	PAINT	HM1	5	6	8	-	TYPE B - "WOMEN"	OCCUPANCY INDICATOR, KEY FUNCTION
102	TOILET	MACHINE SHOP	3.0	A	3' - 0"	7' - 0"	0' - 1 3/4"	METAL	PAINT	HM1	5	6	8	-	TYPE C - "MEN"	OCCUPANCY INDICATOR, KEY FUNCTION
103.1	STORAGE	MACHINE SHOP	6.0	C	6' - 0"	7' - 0"	0' - 1 3/4"	METAL	PAINT	HM2	5	6	8	-	TYPE A - "STORAGE"	
103A	JANITOR	STORAGE	4.0	A	3' - 0"	7' - 0"	0' - 1 3/4"	METAL	PAINT	HM1	5	6	8	-	TYPE A - "CUSTODIAN"	
104	ELECTRICAL	MACHINE SHOP	5.0	A	3' - 0"	7' - 0"	0' - 1 3/4"	METAL	PAINT	HM1	5	6	8	90 MIN.	TYPE A - "ELECTRICAL"	

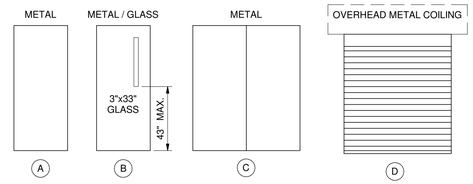

NOTES:
1. CONTRACTOR TO COORDINATE PANIC HARDWARE W/ GLASS IN DOORS TO PREVENT OVERLAP.
2. ALL GLASS LITES IN AND ADJACENT TO RATED DOORS SHALL BE SAFETY GLASS.
3. ALL GLASS LITES IN AND ADJACENT TO NON-RATED DOORS SHALL BE TEMPERED GLASS.
4. ALL WOOD DOORS SHALL BE STAINED - SEE SPECS.
5. ALL METAL DOORS SHALL BE PAINTED. GLAZING STOPS @ DOORS SHALL BE PRE-FINISHED METAL - SEE SPECS.
6. ALL HOLLOW METAL EXTERIOR DOORS ARE TO BE INSULATED.

2 A-5.1 DOOR ELEVATIONS

1/4" = 1'-0"

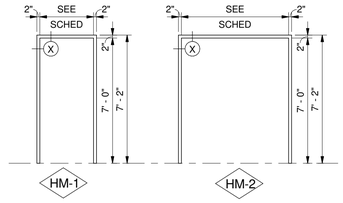

NOTES:
1. ALL HOLLOW METAL FRAMES SHALL BE PAINTED.

3 A-5.1 HOLLOW METAL DOOR FRAME ELEVATIONS

1/4" = 1'-0"

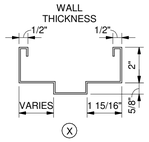

4 A-5.1 HOLLOW METAL DOOR FRAME DETAILS

3" = 1'-0"

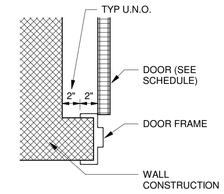

5 A-5.1 TYP. DOOR JAMB DETAIL

1 1/2" = 1'-0"

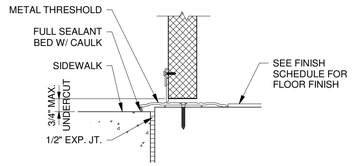

SILL DETAIL 7

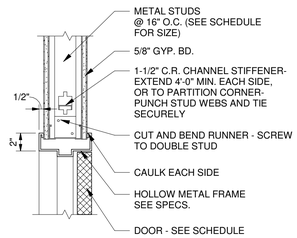

HEAD DETAIL 5

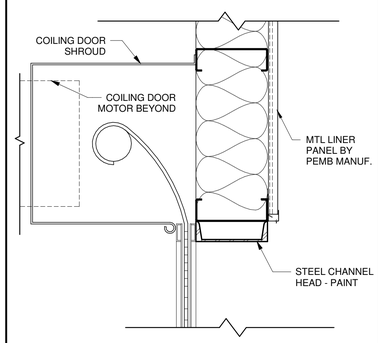

HEAD DETAIL 3

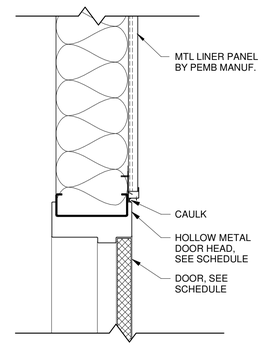

HEAD DETAIL 1

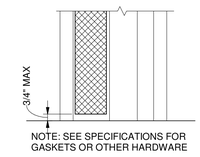

SILL DETAIL 8

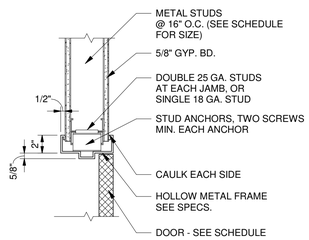

JAMB DETAIL 6

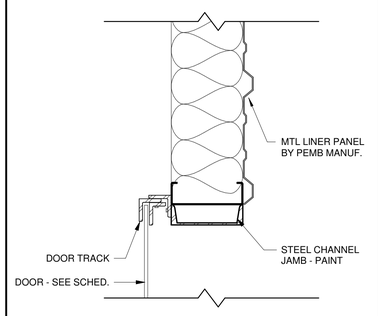

JAMB DETAIL 4

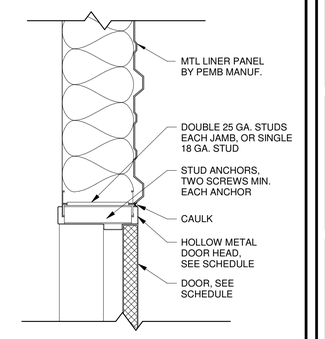

JAMB DETAIL 2

STATE OF ALABAMA
FRANK J. NOLA JR
3871
REG. NO.
3535
ROBERT VAN PEURSEM
REGISTERED ARCHITECTS

NOLA VANPEURSEM
ARCHITECTS, PC
MEMBER OF THE AMERICAN INSTITUTE OF ARCHITECTS
301 JEFFERSON STREET
HUNTSVILLE, ALABAMA 35801
(256) 533-6617
NVPARCHITECTS.COM

THIS DRAWING MAY NOT BE REPRODUCED IN WHOLE OR IN PART WITHOUT THE CONSENT OF NOLA\VANPEURSEM ARCHITECTS

MADISON COUNTY SCHOOLS

CAREER TECH CENTER
MACHINE SHOP

1275 JORDAN ROAD
HUNTSVILLE, ALABAMA 35811

JOB NUMBER
22256

REK / FJN / 07/26/2022
DRAWN - CHECKED - DATE

REVISIONS
No. Description Date

SHEET TITLE
DOOR SCHEDULE & DETAILS

SHEET NUMBER
A-5.1
OF

G:\active jobs\Schools\Madison County Schools\Career Tech Building\Revit\MCS Career Tech Building.rvt
7/26/2022 3:51:11 PM

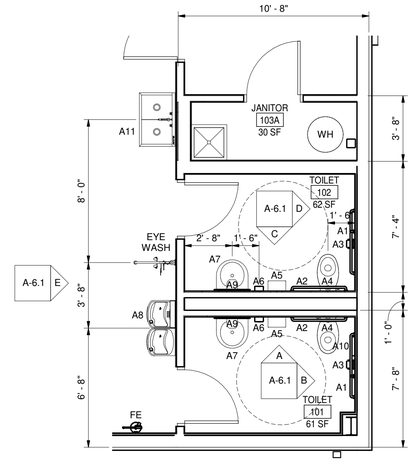

1 A-6.1 ENLARGED RESTROOM PLAN
1/4" = 1'-0"

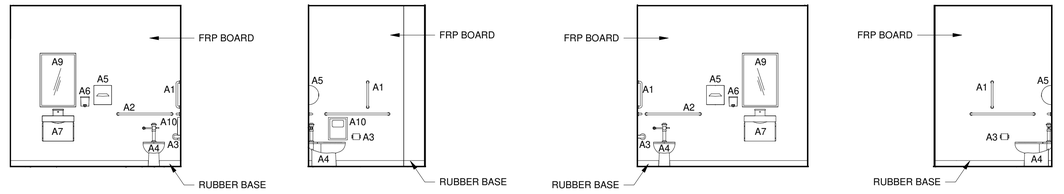

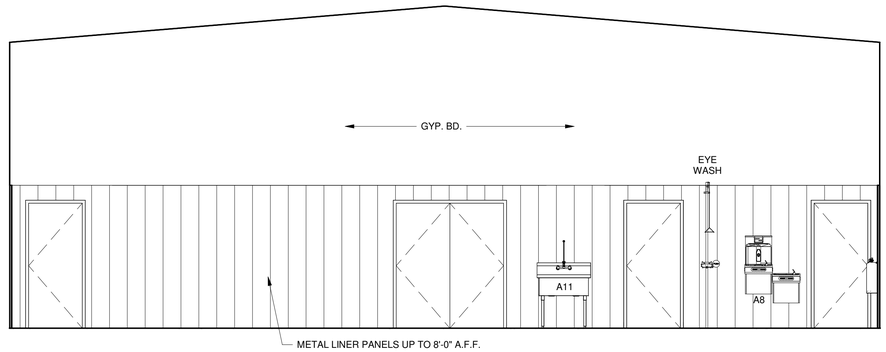

TYPICAL RESTROOM NOTES:
1. SLOPE FLOOR CONTINUOUSLY FROM ROOM PERIMETER WALLS TO FLOOR DRAINS (SEE PLUMBING FOR LOCATIONS OF DRAINS). FLOOR SLOPE SHALL BE 1% (1/8" PER FOOT) MIN. TO 2% (1/4" PER FOOT) MAX.
2. TOILET PAPER, NAPKIN DISPOSAL, & SOAP DISPENSERS ARE TO BE PROVIDED BY OWNER AND INSTALLED BY CONTRACTOR.
3. SEE SPECS FOR ALL TOILET ACCESSORIES.
4. SEE ELECTRICAL PLANS & SPECS FOR HAND DRYERS.

2 A-6.1 ENLARGED RESTROOM ELEVATIONS
1/4" = 1'-0"

TYPICAL ACCESSORY AND FIXTURE MOUNTING HEIGHTS

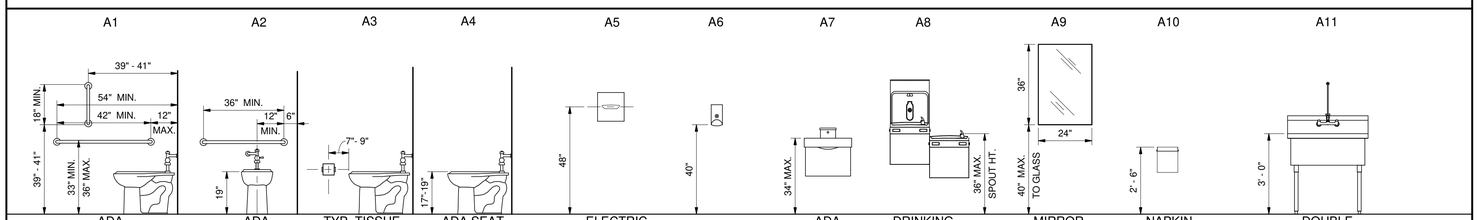

NOTES:
1. FLUSH VALVE CONTROL ON WIDE SIDE OF ACCESS SPACE
2. SANITARY NAPKIN DISPOSAL IN WOMENS/UNISEX RESTROOMS ONLY

NOTE: FLUSH VALVE CONTROL ON WIDE SIDE OF ACCESS SPACE

DESIGN / TYPE MAY VARY FROM SHOWN SEE SPECS

STATE OF ALABAMA
FRANK J. NOLA JR
3871
REG. NO.
3535
ROBERT VAN PEURSEM
REGISTERED ARCHITECTS

NOLA VANPEURSEM ARCHITECTS, PC
MEMBER OF THE AMERICAN INSTITUTE OF ARCHITECTS
301 JEFFERSON STREET
HUNTSVILLE, ALABAMA 35801
(256) 533-6617
NVPARCHITECTS.COM

THIS DRAWING MAY NOT BE REPRODUCED IN WHOLE OR IN PART WITHOUT THE CONSENT OF NOLA\VANPEURSEM ARCHITECTS

MADISON COUNTY SCHOOLS

CAREER TECH CENTER
MACHINE SHOP

1275 JORDAN ROAD
HUNTSVILLE, ALABAMA 35811

JOB NUMBER
22256

REK / FJN / 07/26/2022
DRAWN - CHECKED - DATE

REVISIONS
No. Description Date

SHEET TITLE
ENLARGED RESTROOM PLANS & ELEVATIONS

SHEET NUMBER
A-6.1
OF

7/26/2022 3:51:13 PM G:\active jobs\Schools\Madison County Schools\Career Tech Building\Revit\MCS Career Tech Building.rvt

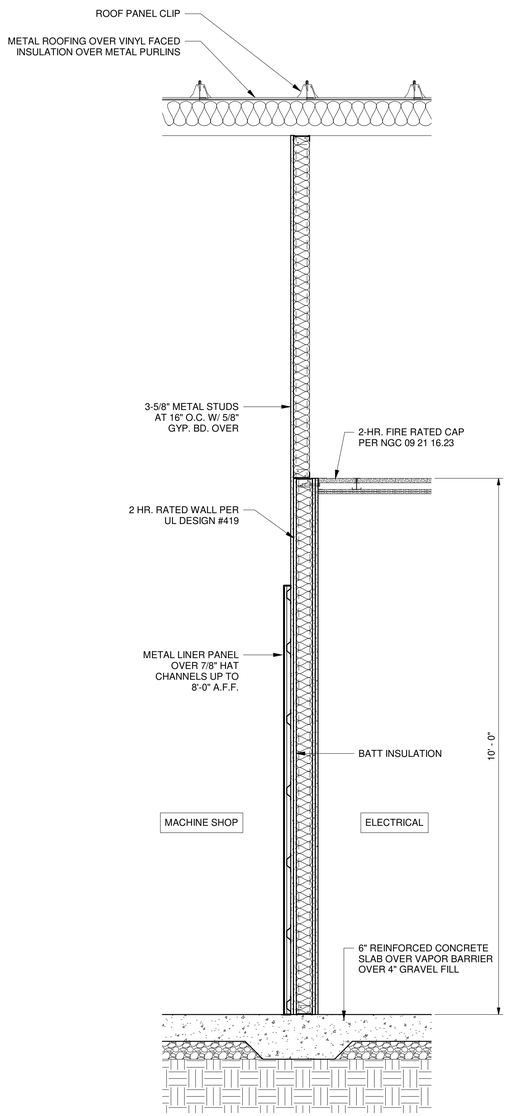

4 A-7.1 WALL SECTION
3/4" = 1'-0"

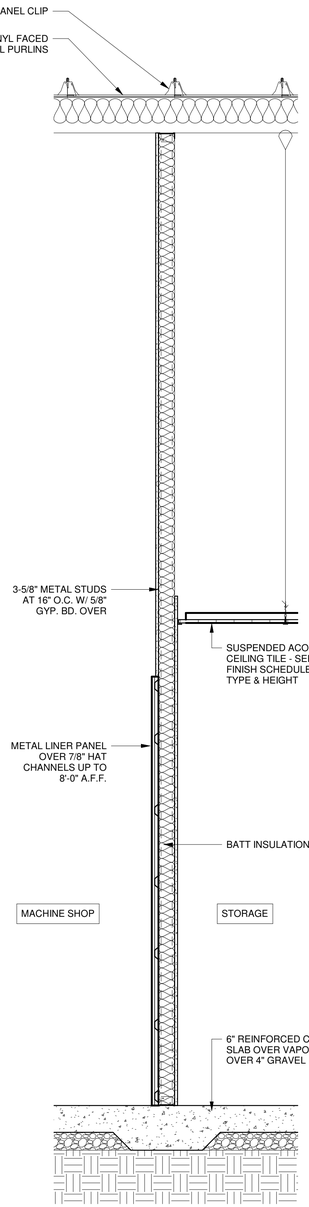

3 A-7.1 WALL SECTION
3/4" = 1'-0"

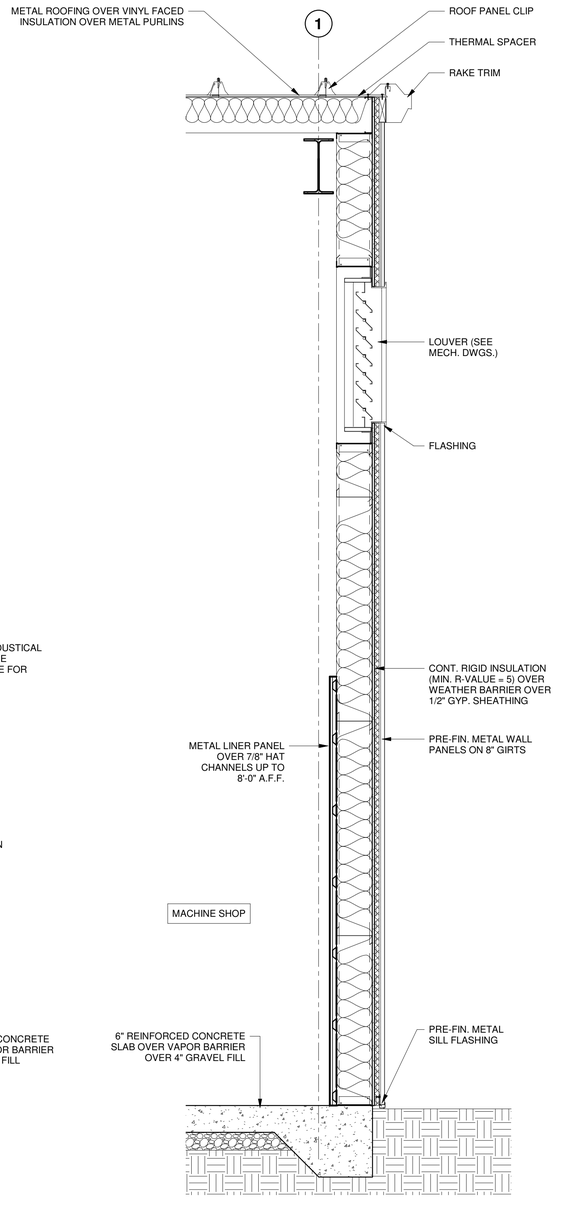

2 A-7.1 WALL SECTION
3/4" = 1'-0"

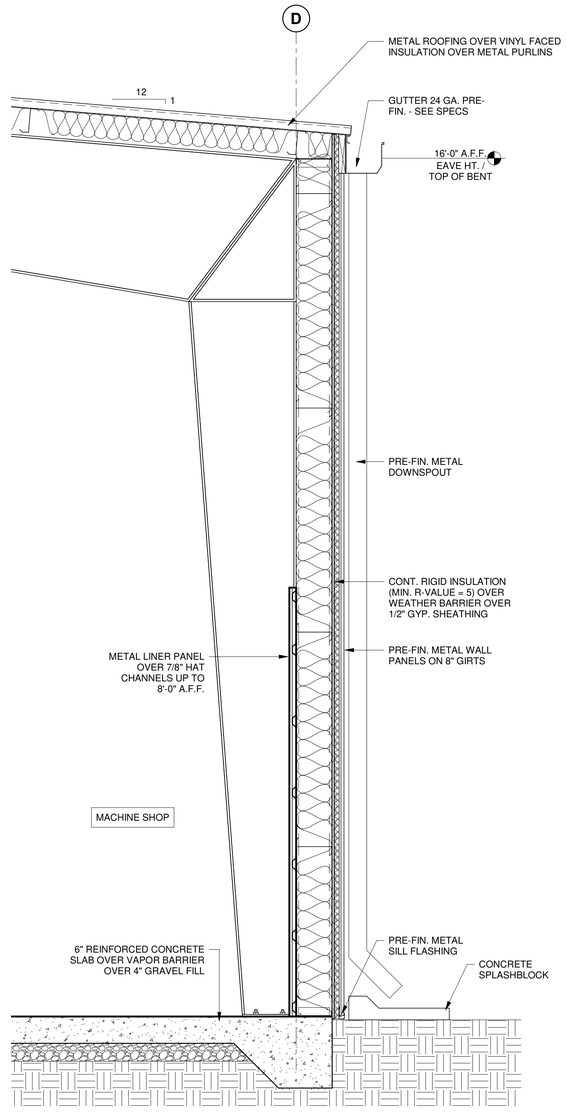

1 A-7.1 WALL SECTION
3/4" = 1'-0"

STATE OF ALABAMA
FRANK J. NOLA JR
3871
REG. NO.
3535
ROBERT VAN PEURSEM
REGISTERED ARCHITECTS

NOLA VANPEURSEM
ARCHITECTS, PC
MEMBER OF THE AMERICAN INSTITUTE OF ARCHITECTS
301 JEFFERSON STREET
HUNTSVILLE, ALABAMA 35801
(256) 533-6617
NVPARCHITECTS.COM

THIS DRAWING MAY NOT BE REPRODUCED IN WHOLE OR IN PART WITHOUT THE CONSENT OF NOLA\VANPEURSEM ARCHITECTS

MADISON COUNTY SCHOOLS

CAREER TECH CENTER MACHINE SHOP

1275 JORDAN ROAD
HUNTSVILLE, ALABAMA 35811

JOB NUMBER
22256

REK / FJN / 07/26/2022
DRAWN - CHECKED - DATE

REVISIONS

No.	Description	Date

SHEET TITLE
WALL SECTIONS

SHEET NUMBER
A-7.1
OF

G:\active jobs\Schools\Madison County Schools\Career Tech Building\Revit\MCS Career Tech Building.rvt
7/26/2022 3:51:14 PM

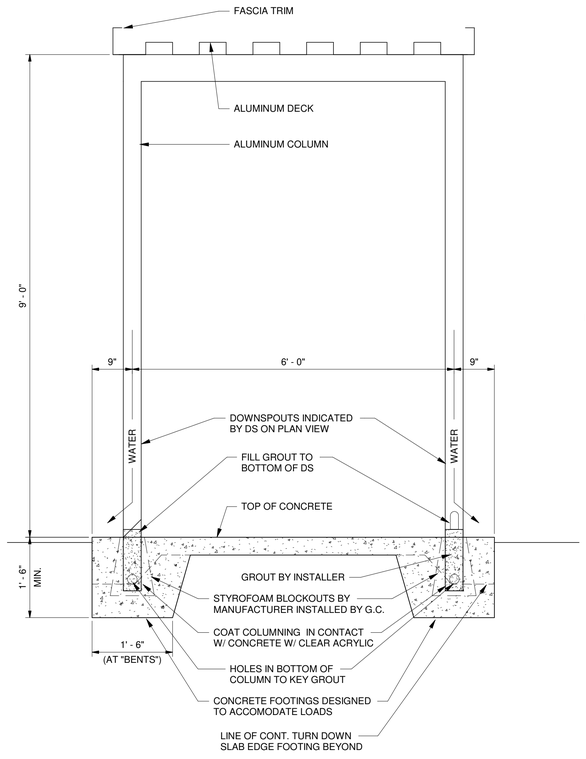

2 A-8.1 CANOPY SECTION
3/4" = 1'-0"

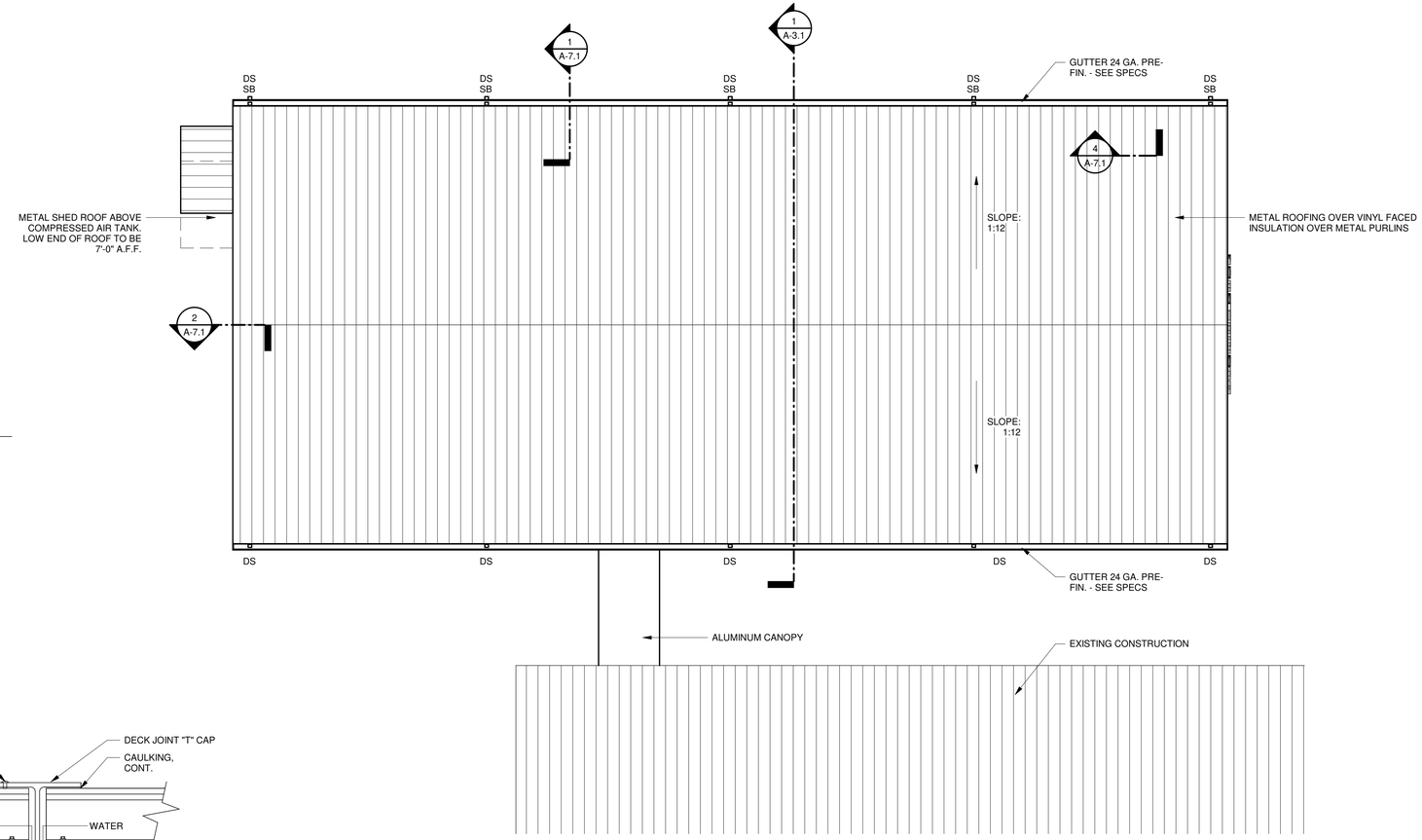

1 A-8.1 ROOF PLAN
1/8" = 1'-0"

NORTH

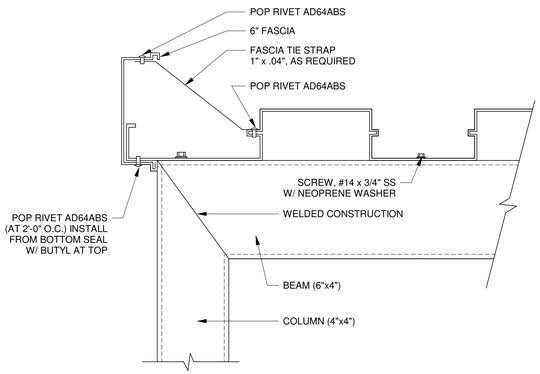

3 A-8.1 CANOPY EDGE DETAIL
3" = 1'-0"

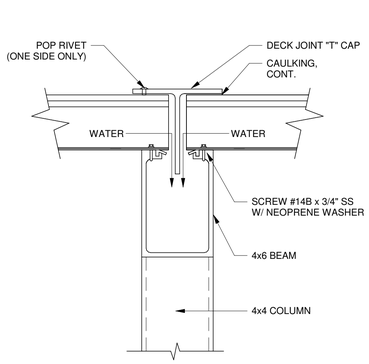

4 A-8.1 CANOPY BEAM DETAIL
3" = 1'-0"

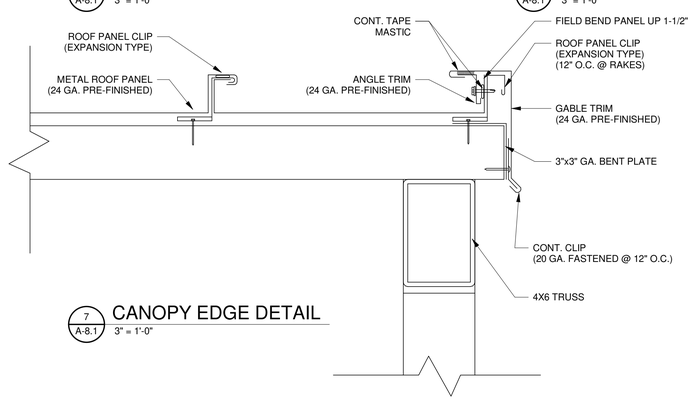

7 A-8.1 CANOPY EDGE DETAIL
3" = 1'-0"

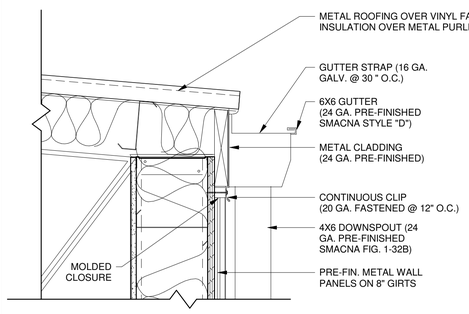

EAVE DETAIL | 1

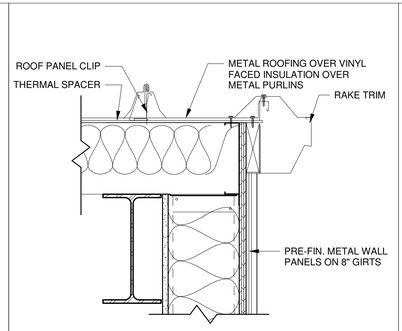

RAKE EDGE DETAIL | 2

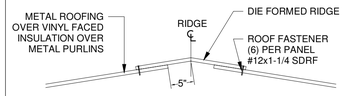

RIDGE CAP DETAIL | 3

STATE OF ALABAMA
FRANK J. NOLA JR
3871
REG. NO.
3535
ROBERT VAN PEURSEM
REGISTERED ARCHITECTS

NOLA VANPEURSEM
ARCHITECTS, PC
MEMBER OF THE AMERICAN INSTITUTE OF ARCHITECTS
301 JEFFERSON STREET
HUNTSVILLE, ALABAMA 35801
(256) 533-6617
NVPARCHITECTS.COM

THIS DRAWING MAY NOT BE REPRODUCED IN WHOLE OR IN PART WITHOUT THE CONSENT OF NOLA|VANPEURSEM ARCHITECTS

MADISON COUNTY SCHOOLS

CAREER TECH CENTER MACHINE SHOP

1275 JORDAN ROAD
HUNTSVILLE, ALABAMA 35811

JOB NUMBER
22256

REK / FJN / 07/26/2022
DRAWN · CHECKED · DATE

REVISIONS

No.	Description	Date

SHEET TITLE
ROOF PLAN

SHEET NUMBER
A-8.1
OF

G:\active jobs\Schools\Madison County Schools\Career Tech Building\Revit\MCS Career Tech Building.rvt
7/26/2022 3:51:14 PM

PRM STRUCTURAL ENGINEERS
4835 University Sq., Suite 17,
Huntsville, AL 35816
Phone: (256) 652-6818
Project No. 2211

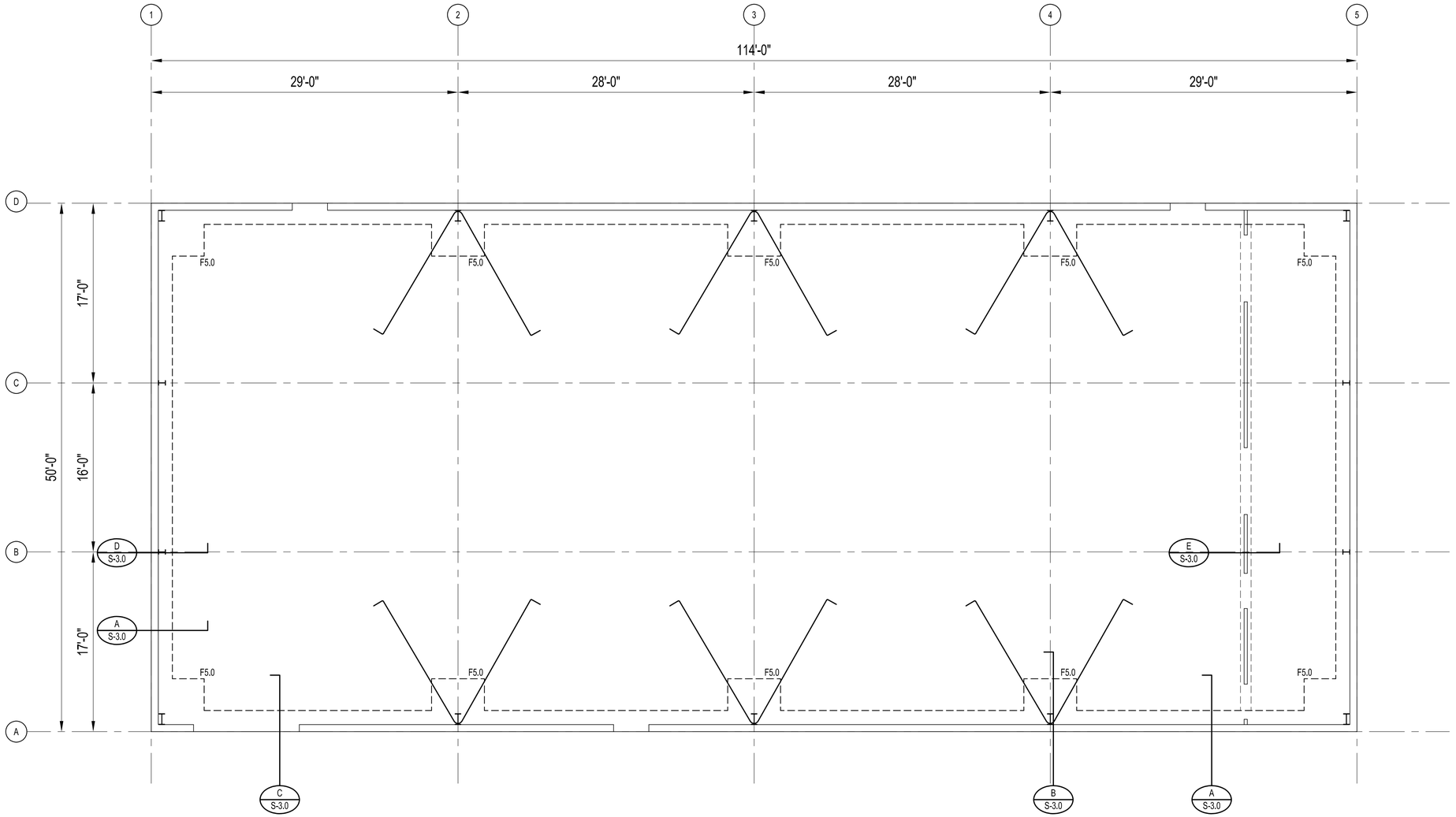

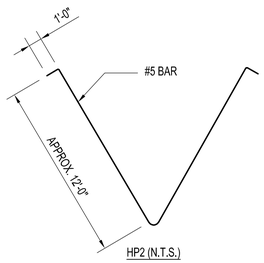

(FABRICATE HAIRPIN FROM (1) 30'-0" LONG STICK)

MARK:	FOOTING SIZE: W x L x D	REINFORCING:
F5.0	5'-0"x5'-0"x24"	6 #5 EACH WAY, BOTTOM

NOTE: THE BOTTOM (3) #5 GRADE BEAM BARS CAN COUNT
FOR (3) OF THE FOOTING BARS IN THE ONE DIRECTION.

NORTH

FOUNDATION PLAN

SCALE: 3/16" = 1'-0"

PLAN NOTES:

1. FINISHED FLOOR ELEVATION (0'-0") (REFERENCE ELEVATION). REFER TO ARCHITECTURAL / CIVIL DRAWINGS FOR ACTUAL ELEVATION.
2. BOTTOM OF GRADE BEAM AND FOOTING ELEVATION (-2'-0") OR A MINIMUM OF 12" BELOW ADJACENT FINISHED GRADE, WHICHEVER IS LOWER, UNLESS NOTED OTHERWISE ON PLAN.
3. VERIFY ALL FOOTING STEP LOCATIONS WITH FINISHED GRADE ELEVATIONS AND ADJUST AS REQUIRED.
4. SLAB TO BE 6" THICK CONCRETE. SLAB CONSTRUCTION TO BE CAST-IN-PLACE CONCRETE ON 15 MIL VAPOR BARRIER AND 4" (MIN.) POROUS FILL COMPACTED PER SITE AND FOUNDATION GENERAL NOTES. REINFORCE CONCRETE SLAB WITH 4x4 W4/W4 W.W.F. SUPPORTED ON CONTINUOUS CHAIRS. REINFORCING TO BE AT 1 1/2" CLEAR FROM TOP OF SLAB.
5. ALL GRAVEL FILL MUST BE PLACED IN 8" (MAX.) LIFTS AND COMPACTED PER SITE AND FOUNDATION GENERAL NOTES TO ENSURE PROPER SUPPORT OF SLABS-ON GRADE. SPECIAL CARE MUST BE GIVEN TO COMPACTING BACKFILL IN TRENCHES (REFER TO SITE AND FOUNDATION GENERAL NOTES).
6. CONTRACTOR TO PROVIDE SHOP DRAWINGS SHOWING PROPOSED CONTROL JOINT LAYOUT AND SPACING. CONTROL JOINTS SHOULD NOT BE SPACED MORE THEN 12'-0" O.C. REFER TO CONTROL JOINT TYPICAL DETAIL.
7. ADD (2) #4 x 5'-0" LONG RE-ENTRANT BARS AT ALL INTERIOR CORNERS OF SLAB AND AT ALL DISCONTINUOUS CONTROL JOINTS.
8. VERIFY ALL DIMENSIONS WITH METAL BUILDING MANUFACTURER'S SHOP DRAWINGS PRIOR TO COMMENCING CONSTRUCTION.
9. METAL BUILDING MANUFACTURER TO DESIGN BUILDING FOR A COLLATERAL LOAD OF 5 PSF.
10. COORDINATE ALL BRACING LOCATIONS WITH ARCHITECTURAL DRAWINGS AND PROVIDE PORTAL FRAMES IF INTERFERENCES DO NOT ALLOW X-BRACING.
11. SLOPE FLOOR TOWARDS TRENCH DRAINS AS REQUIRED IN ARCHITECTURAL DRAWINGS.



NOLA VANPEURSEM
ARCHITECTS, PC
MEMBER OF THE AMERICAN INSTITUTE OF ARCHITECTS
301 JEFFERSON STREET
HUNTSVILLE, ALABAMA 35801
(256) 533-6617
NVPARCHITECTS.COM

THIS DRAWING MAY NOT BE REPRODUCED IN WHOLE OR IN PART WITHOUT THE CONSENT OF NOLA|VANPEURSEM ARCHITECTS

MADISON COUNTY SCHOOLS

CAREER TECH CENTER
MACHINE SHOP

1275 JORDAN ROAD
HUNTSVILLE, ALABAMA 35811

JOB NUMBER
22256

ALM / PRM / 07/26/2022
DRAWN - CHECKED - DATE

REVISIONS
No. Description Date

SHEET TITLE
FOUNDATION PLAN

SHEET NUMBER
S-1.0
OF
5

PRM
STRUCTURAL ENGINEERING
4835 University Sq., Suite 17,
Huntsville, AL 35816
Phone: (256) 652-6818
Project No. 2211

GENERAL NOTES:

1. CONSTRUCTION METHODS, PROCEDURES, AND SEQUENCES ARE THE CONTRACTOR'S RESPONSIBILITY. THE CONTRACTOR SHALL TAKE ALL THE NECESSARY MEANS TO MAINTAIN AND PROTECT THE STRUCTURAL INTEGRITY OF ALL CONSTRUCTION NEW AND EXISTING, AT ALL STAGES.
2. CONTRACTOR SHALL COMPLY WITH ALL APPLICABLE SAFETY AND ERECTION REQUIREMENTS OF ALL GOVERNING PUBLIC AGENCIES DURING FABRICATION AND CONSTRUCTION.
3. CONTRACTOR SHALL COORDINATE WITH ARCHITECTURAL DRAWINGS FOR DETAILING INCLUDING, BUT NOT LIMITED TO NOTCHES, STEPS, FORM TIES, REVEALS, AND CONSTRUCTION JOINTS IN EXPOSED CONCRETE AND MASONRY.
4. CONTRACTOR SHALL FIELD VERIFY ALL EXISTING DIMENSIONS AND ALL DIMENSIONS FROM NEW CONSTRUCTION TO EXISTING CONSTRUCTION. CONTRACTOR SHALL FIELD VERIFY ALL EXISTING CONDITIONS PRIOR TO ANY PERTINENT WORK. ALL EXISTING CONDITIONS AND DIMENSIONS SHALL BE NOTED BY THE CONTRACTOR ON THE SHOP DRAWINGS PRIOR TO SUBMITTING THOSE SHOP DRAWINGS FOR REVIEW.
5. THE CONTRACTOR SHALL COORDINATE WITH ARCHITECTURAL, CIVIL, MECHANICAL, ELECTRICAL, AND PLUMBING DRAWINGS AND VERIFY THE LOCATIONS AND SIZES OF CHASES, INSERTS, OPENINGS, SLEEVES, FINISHES, DEPRESSIONS, SLOPES, AND OTHER PROJECT REQUIREMENTS. USE DETAILS PROVIDED BY THE MANUFACTURER FOR INSTALLATION AND EQUIPMENT ANCHORAGE.
6. ALL CONSTRUCTION JOINTS SHOWN ON THE STRUCTURAL DRAWINGS SHALL BE INCORPORATED INTO THE STRUCTURE. ADDITIONAL CONSTRUCTION JOINTS TO FACILITATE CONSTRUCTION SHALL BE LOCATED AND DETAILED ON THE SHOP DRAWINGS FOR REVIEW.
7. ALL DETAILS SHOWN ARE TYPICAL. SIMILAR DETAILS APPLY TO SIMILAR CONDITIONS, UNLESS SHOWN OTHERWISE.
8. THE CONTRACTOR SHALL SUBMIT THE SHOP DRAWINGS, DETAILING ALL OPENINGS, INCLUDING ADDED REINFORCEMENT, AS SHOWN ON TYPICAL DETAILS, FOR REVIEW.
9. ALL STRUCTURAL MEMBERS, AS SHOWN, HAVE BEEN DESIGNED TO CARRY IN PLACE DESIGN LOADS ONLY. THE CONTRACTOR SHALL BE RESPONSIBLE FOR THE SUPPORT OF ANY ADDITIONAL LOADS AND FORCES IMPOSED DURING CONSTRUCTION, TRUCKING, ERECTING AND HANDLING.
10. CONTRACTOR SHALL BRACE ALL BASEMENT TYPE WALLS RETAINING EARTH UNTIL RESTRAINING SLABS HAVE BEEN PLACED AND REACHED REQUIRED DESIGN STRENGTH.
11. CONTRACTOR IS RESPONSIBLE FOR COORDINATING SPECIFIC CONNECTION AND SUPPORT REQUIREMENTS FOR EXTERIOR VENEER WITH THE ARCHITECT, STRUCTURAL ENGINEER, AND AFFECTED SUBCONTRACTOR. ADDITIONAL FRAMING AND SUPPORT MAY NEED TO BE ADDED TO MEET THE SPECIFIC REQUIREMENTS OF THE VENEER SYSTEM.

DESIGN CRITERIA:

1. BUILDING CODES AND STANDARDS:
   - A. GENERAL BUILDING CODE: 2015 INTERNATIONAL BUILDING CODE
   - B. CONCRETE: BUILDING CODE REQUIREMENTS FOR STRUCTURAL CONCRETE, ACI 318
   - C. STRUCTURAL STEEL: SPECIFICATION FOR THE DESIGN, FABRICATION AND ERECTION OF STRUCTURAL STEEL FOR BUILDINGS, AISC
2. DESIGN LOADS
   - A. DEAD LOADS: ANY CHANGE IN CONSTRUCTION MATERIALS FROM THOSE SHOWN ON THE ARCHITECTURAL OR STRUCTURAL DRAWINGS SHALL BE REPORTED BY THE GENERAL CONTRACTOR TO THE STRUCTURAL ENGINEER FOR VERIFICATION OF LOAD-CARRYING CAPACITY OF THE STRUCTURE. PARTITION DEAD LOAD OF 20 PSF HAS BEEN INCLUDED.
   - B. LIVE LOADS (PSF):

ROOFS	20

   - C. SNOW LOADS:

     PER THE PRE-ENGINEERED METAL BUILDING MANUFACTURER
   - D. WIND LOADS:

     PER THE PRE-ENGINEERED METAL BUILDING MANUFACTURER
   - E. SEISMIC LOADS:

     PER THE PRE-ENGINEERED METAL BUILDING MANUFACTURER

SHOP DRAWINGS:

1. ELECTRONIC SHOP DRAWINGS ARE PREFERRED, SUBMITTED THROUGH THE ARCHITECT. IF PAPER SHOP DRAWINGS ARE CHOSEN, SUBMIT 4 COPIES. ONE COPY WILL BE KEPT BY THE STRUCTURAL ENGINEER, ONE COPY WILL BE KEPT BY THE ARCHITECT, AND TWO COPIES WILL BE RETURNED TO THE GENERAL CONTRACTOR. ALL FURTHER COPIES REQUIRED BY THE CONTRACTOR ARE THE RESPONSIBILITY OF THE CONTRACTOR.
2. ALLOW TWO WEEKS FOR THE REVIEW OF EACH SUBMITTAL.
3. THE CONTRACTOR ACKNOWLEDGES ITS RESPONSIBILITY TO SUBMIT COMPLETE SHOP DRAWINGS AND OTHER REQUIRED SUBMITTALS. INCOMPLETE SUBMITTALS WILL BE RETURNED TO THE CONTRACTOR UNREVIEWED. NO TIME EXTENSIONS OR COST INCREASES WILL BE ALLOWED FOR DELAYS CAUSED BY RETURN OF INCOMPLETE SUBMITTALS.
4. THE CONTRACTOR SHALL REVIEW AND STAMP ALL SUBMITTALS PRIOR TO SUBMITTING THEM TO THE STRUCTURAL ENGINEER FOR REVIEW. QUESTIONS TO THE CONTRACTOR AND REQUESTS FOR FIELD VERIFICATION SHALL BE ANSWERED/PROVIDED PRIOR TO SUBMITTING THEM TO THE STRUCTURAL ENGINEER FOR REVIEW. SUBMITTALS THAT HAVE NOT BEEN REVIEWED BY THE GENERAL CONTRACTOR WILL BE RETURNED UNREVIEWED. NO TIME EXTENSIONS OR COST INCREASES WILL BE ALLOWED FOR DELAYS CAUSED BY RETURN OF UNREVIEWED SUBMITTALS.
5. ALL SHOP DRAWINGS ARE TO BE NEWLY PREPARED. REPRODUCTIONS OF CONTRACT STRUCTURAL DRAWINGS FOR USE AS ERECTION DRAWINGS WILL NOT BE PERMITTED. SHOULD SHOP DRAWING SUBMITTALS CONTAIN ANY REPRODUCTIONS OF CONTRACT STRUCTURAL DRAWINGS, THEY WILL BE REJECTED AND RETURNED WITHOUT ENGINEER REVIEW.

SITE AND FOUNDATION:

1. A GEOTECHNICAL ENGINEER, EMPLOYED BY THE GENERAL CONTRACTOR, SHALL PROVIDE COMPACTED FILL REQUIREMENTS FOR THE BUILDING PAD AND REVIEW THE FOUNDATION BEARING SURFACE TO VERIFY THE ASSUMED BEARING PRESSURE NOTED BELOW. DO NOT PLACE CONCRETE PRIOR TO GEOTECHNICAL ENGINEER'S APPROVAL.
2. ASSUMED MAXIMUM BEARING PRESSURE: 2000 PSF.
3. ALL FOUNDATION BEARING SURFACES SHALL BE REVIEWED BY THE GEOTECHNICAL ENGINEER PRIOR TO PLACING CONCRETE TO ENSURE THEIR COMPLIANCE WITH THE PRESSURES NOTED ABOVE. ALL BOTTOM ELEVATIONS ARE ESTIMATED AND MAY BE ADJUSTED IN THE FIELD BY THE GEOTECHNICAL ENGINEER. ALL BOTTOM ELEVATIONS THAT ARE LOWER THAN THOSE GIVEN IN THE STRUCTURAL DRAWINGS MUST BE FILLED WITH LEAN CONCRETE UP TO THE BOTTOM OF FOOTING ELEVATION.
4. COMPACTED FILL WITHIN THE BUILDING AREA AND EXTENDING 10 FEET OUTSIDE THE EXTERIOR BUILDING LINE SHALL MEET THE FOLLOWING REQUIREMENTS:

   PLASTICITY INDEX LESS THAN 30
   MAXIMUM SIZE STONE OF 4 INCHES
   SOIL FREE OF ORGANIC MATERIAL
   PLACE IN 8 INCH LOOSE LIFTS
   COMPACT TO 98 PERCENT OF STANDARD PROCTOR MAXIMUM DRY DENSITY
   FIELD DENSITY TEST FOR EACH 2500 SQUARE FEET PER FOOT OF FILL

5. STRUCTURAL FILL UNDER FLOOR SLABS: COMPACT TO 98 PERCENT OF SOIL'S STANDARD PROCTOR MAXIMUM DRY DENSITY.
6. GRAVEL FILL IN TRENCHES; PLACE IN 8 INCH MAXIMUM LIFTS AND COMPACT EACH LIFT WITH VIBRATORY OR TAMPING COMPACTION EQUIPMENT.
7. GRAVEL FILL UNDER CONCRETE SLAB-ON-GRADE MUST BE COMPACTED USING VIBRATORY PLATE COMPACTION EQUIPMENT OR VIBRATORY ROLLERS. SPECIAL CARE MUST BE TAKEN TO ENSURE PROPER COMPACTION OF GRAVEL AT EDGES OF SLAB AND ADJACENT TO FOUNDATION STEM WALLS WHILE MAINTAINING THE STRUCTURAL INTEGRITY OF FOUNDATION STEM WALLS.
8. BACKFILL FOR FOUNDATION AND RETAINING WALLS SHALL BE A FREE DRAINING GRANULAR MATERIAL, SUCH AS #57 STONE. BACKFILL SHALL BE PLACED IN 12 INCH LIFTS AND SHALL BE COMPACTED SUFFICIENTLY TO PREVENT SUBSIDENCE OF SURFACE ADJACENT TO THE WALL. THE GRANULAR MATERIAL SHALL BE PLACED IN A 45 DEGREE WEDGE EXTENDING FROM THE OUTSIDE EDGE OF THE FOOTING.

CONCRETE

1. CONCRETE SCHEDULE:

ITEM	28 DAY COMPRESSIVE STRENGTH
ALL CONCRETE	3000 PSI, NORMAL WEIGHT

2. CONCRETE COVER AROUND REINFORCING (U.N.O.)

UNFORMED SURFACES IN CONTACT WITH EARTH	3 IN.
UNFORMED SURFACES OVER VAPOR BARRIER	2 IN.
FORMED SURFACES EXPOSED TO EARTH OR WEATHER:	
#5 AND SMALLER	1 1/2 IN.
#6 AND LARGER	2 IN.
FORMED SURFACES NOT EXPOSED TO EARTH OR WEATHER	1 IN.

3. CONCRETE CONSTRUCTION AND OPERATIONS SHALL COMPLY WITH A.C.I. STANDARDS.
4. CONCRETE BEAMS, JOISTS, FOOTINGS, AND SLABS SHALL HAVE NO HORIZONTAL JOINTS. WHERE THIS IS NOT FEASIBLE, ANY STOP IN CONCRETE WORK MUST BE MADE AT CENTER OF SPAN WITH VERTICAL BULKHEAD AND SHEAR KEY, UNLESS SHOWN OTHERWISE.
5. NO CONDUIT OR PIPE SHALL BE CAST IN CONCRETE WITHOUT THE WRITTEN APPROVAL OF THE STRUCTURAL ENGINEER. IF CONDUIT OR PIPE IS ALLOWED IN THE SLAB, THEY SHALL MEET THE FOLLOWING REQUIREMENTS:
   - A. CONDUIT AND PIPE SHALL HAVE A MINIMUM OF 3" CLEAR BETWEEN PIECES OF CONDUIT OR PIPE AND A MINIMUM SPACING OF 3 TIMES THE CONDUIT OR PIPE DIAMETER.
   - B. OUTER LIMITS OF CONDUIT, CROSSING CONDUIT AND COUPLERS SHALL NOT EXCEED 1/3 THE SLAB THICKNESS AND SHALL BE LOCATED WITHIN THE MIDDLE THIRD OF THE SLAB.
   - C. THE CONTRACTOR SHALL COORDINATE WITH THE ARCHITECT AND ELECTRICAL ENGINEER AS REQUIRED TO ENSURE THAT PANEL LAYOUTS AND ELECTRICAL ROOMS ARE LARGE ENOUGH TO ACCOMMODATE CONDUIT CLEARANCE AND SPACING REQUIREMENTS WHERE CONDUITS TURN UP/DOWN AND OUT OF THE SLAB.
6. MECHANICAL ANCHORS INTO CONCRETE SHALL BE POWERS WEDGE BOLTS, SIMPSON TITEN HD, OR EQUIVALENT.
7. EPOXY ANCHORS INTO CONCRETE SHALL BE POWERS, SIMPSON, OR HILTI INSTALLED WITH EPOXY ADHESIVES PER THE MANUFACTURER'S GUIDELINES FOR CLEANING, USE, AND INSTALLATION.

REINFORCING

1. ALL REINFORCING SHALL CONFORM TO THE LATEST REVISION OF ASTM SPECIFICATION A615, GRADE 60.
2. ALL REINFORCING SHALL BE DETAILED IN ACCORDANCE WITH A.C.I. STANDARD 315, LATEST REVISION.
3. NO REINFORCING SHALL BE WELDED IN ANY MANNER, UNLESS SPECIFICALLY SHOWN OR NOTED ON THE DRAWINGS.
4. ALL WELDED WIRE FABRIC (W.W.F.) SHALL CONFORM TO ASTM A-185. WELDED WIRE FABRIC SHALL BE LAPPED A MINIMUM OF 1'-0" AND SHALL BE FURNISHED IN SHEETS ONLY (NO ROLLS). ALL WELDED WIRE FABRIC SHALL BE SUPPORTED AT THE CORRECT DEPTH.
5. REINFORCING STEEL SHOWN IN SECTIONS IS A SCHEMATIC INDICATION THAT REINFORCING EXISTS. REFER TO SCHEDULES, SECTION NOTES, AND GENERAL NOTES FOR ACTUAL REINFORCING REQUIRED.
6. REINFORCING BAR PLACING ACCESSORIES SHALL BE PLACED IN ACCORDANCE WITH C.R.S.I. SPECIFICATIONS, AND A.C.I. MANUAL OF STANDARD PRACTICE. WHERE CONCRETE IS EXPOSED IN FINISHED BUILDING, PROVIDE ACCESSORIES WITH RUSTPROOF LEGS.
7. ALL SPLICES SHALL BE CLASS "B" TENSION LAP SPLICES, UNLESS NOTED OTHERWISE.
8. MISCELLANEOUS SLABS-ON-GRADE (INCLUDING EXTERIOR WALK AND DRIVE SLABS - UNLESS THESE SLABS ARE COVERED IN CIVIL DRAWINGS): 4" THICK, REINFORCED WITH 6x6 W2.1/W2.1 WELDED WIRE FABRIC, SUPPORTED AT MID-DEPTH OF SLAB, UNLESS SHOWN OTHERWISE.
9. CONTINUOUS GRADE BEAMS: 2'-0" x 2'-0", REINFORCED WITH 3 #5 CONT. TOP AND BOTTOM AND #3 TIES AT 24" O.C., UNLESS NOTED OTHERWISE.
10. PROVIDE OUTSIDE CORNER BARS IN CONCRETE FOOTINGS TO MATCH THE SIZE AND SPACING OF THE HORIZONTAL REINFORCING. LEG LENGTH SHALL BE EQUIVALENT TO A CLASS "A" SPLICE, UNLESS NOTED OTHERWISE.
11. AT OPENINGS LARGER THAN 12" IN CONCRETE WALLS AND FLOOR SLABS, PROVIDE 2 #4 BARS AT ALL 4 SIDES OF THE OPENING. EXTEND BARS 2'-0" BEYOND THE CORNERS OF THE OPENING.

STRUCTURAL STEEL

1. ANCHOR BOLTS: ASTM F1554 GR 36, HEADED TYPE, UNLESS NOTED OTHERWISE.
2. FABRICATE AND ERECT ALL STRUCTURAL STEEL IN ACCORDANCE WITH AISC "SPECIFICATION FOR THE DESIGN, FABRICATION, AND ERECTION OF STRUCTURAL STEEL FOR BUILDINGS".
3. BOLTS SHOWN IN SECTIONS AND DETAILS ARE A SCHEMATIC INDICATION THAT BOLTS MAY BE USED. ACTUAL NUMBER, UNLESS SPECIFIED, TO BE IN ACCORDANCE WITH AISC.
4. FABRICATE CROSS BRACING WITH SUFFICIENT DRAW TO PREVENT SAGGING.
5. THE STEEL FRAME IS NOT "SELF-SUPPORTING". ADEQUATE TEMPORARY SUPPORT MUST BE PROVIDED BY THE CONTRACTOR UNTIL REQUIRED CONNECTIONS OR ELEMENTS ARE IN PLACE.
6. PROVIDE 3" MINIMUM CONCRETE COVER FOR ALL STEEL BELOW GRADE. ALL EXPOSED EXTERIOR STRUCTURAL STEEL SHALL BE HOT-DIP GALVANIZED (ASTM A123) UNLESS SHOWN IN THE ARCHITECTURAL DRAWINGS OR SPECIFICATIONS AS PAINTED OR STAINLESS STEEL.
7. DO NOT PRIME OR PAINT TOP FLANGE SURFACES OF BEAMS WHICH ARE TO RECEIVE FIELD-WELDED CONNECTIONS OR HEADED STUDS.
8. COORDINATE PRIMING OR PAINTING OF STRUCTURAL STEEL WITH FIREPROOFING REQUIREMENTS.

ENGINEERED METAL BUILDING

1. DESIGN, FABRICATE AND ERECT ENGINEERED METAL BUILDING IN ACCORDANCE WITH NAMBM STANDARDS AND THE INTERNATIONAL BUILDING CODE. METAL BUILDING SHOP DRAWINGS SHALL BEAR THE SEAL OF AN ENGINEER REGISTERED IN THE STATE OF ALABAMA.
2. ANCHOR BOLT SIZE, LENGTH, AND LOCATION ARE TO BE DESIGNATED BY THE METAL BUILDING SUPPLIER. ANCHOR BOLTS ARE TO BE PURCHASED AND INSTALLED BY THE GENERAL CONTRACTOR.
3. BEFORE FOOTING INSTALLATION, THE ANCHOR BOLT EMBEDMENT LENGTHS MUST BE VERIFIED. THE FOOTING DEPTH SHALL BE THE SCHEDULED DEPTH OR THE ANCHOR BOLT EMBEDMENT DEPTH PLUS 3 INCHES, WHICHEVER IS GREATER.
4. HORIZONTAL FORCE TRANSFER FROM METAL BUILDING COLUMN BASE TO CONCRETE BY METAL BUILDING SUPPLIER.
5. METAL BUILDING SUPPLIER TO VERIFY COLUMN LAYOUT. ANY CHANGES MUST BE SUBMITTED FOR REVIEW OF FOUNDATION DESIGN BEFORE CONSTRUCTION BEGINS.
6. THE FOUNDATIONS AND DETAILS SHOWN ON THE STRUCTURAL DRAWINGS ARE BASED ON PRELIMINARY COLUMN REACTIONS AND ARE SHOWN FOR BIDDING PURPOSES ONLY.
7. WHEN THE METAL BUILDING SUPPLIER HAS BEEN SELECTED AND THE FINAL METAL BUILDING DESIGN COMPLETED, THE METAL BUILDING SUPPLIER SHALL FURNISH FINAL DESIGN LOADS, BUILDING REACTIONS, AND NECESSARY DETAILS TO THE FOUNDATION ENGINEER FOR REVIEW. THE FOUNDATION DRAWINGS WILL BE MODIFIED AS REQUIRED PRIOR TO ANY CONCRETE PLACEMENT.
8. BEFORE FOOTING INSTALLATION, METAL BUILDING SUPPLIER SHALL SUBMIT DESIGN LOADS AND COLUMN REACTIONS.

NOLA VANPEURSEM
ARCHITECTS, PC
MEMBER OF THE AMERICAN INSTITUTE OF ARCHITECTS
301 JEFFERSON STREET
HUNTSVILLE, ALABAMA 35801
(256) 533-4617
NV@ARCHITECTS.COM

THIS DRAWING MAY NOT BE REPRODUCED IN WHOLE OR IN PART WITHOUT THE CONSENT OF NOLA|VANPEURSEM ARCHITECTS

MADISON COUNTY SCHOOLS

CAREER TECH CENTER MACHINE SHOP

1275 JORDAN ROAD
HUNTSVILLE, ALABAMA 35811

JOB NUMBER
22256

ALM	PRM	07/26/2022
DRAWN	CHECKED	DATE

REVISIONS

No.	Description	Date

SHEET TITLE
GENERAL NOTES

SHEET NUMBER
S-2.0
OF
5

MINIMUM REQUIRED SUBMITTALS:		
SPEC. SECTION	SPEC. SECTION TITLE	REQUIRED SUBMITTAL
03200	CONCRETE REINFORCEMENT	SHOP DRAWINGS MATERIAL CERTIFICATES WELDERS CERTIFICATES
03300	CONCRETE	PRODUCT DATA DESIGN MIXES MANUFACTURER'S INSTALLATION INSTRUCTIONS PROJECT RECORD DOCUMENTS CONTROL JOINT LAYOUT PLAN

TENSION LAP SPLICE LENGTHS

BAR SIZE	f'c 3000 PSI				f'c 4000 PSI			
	TOP BARS		OTHER BARS		TOP BARS		OTHER BARS	
	A	B	A	B	A	B	A	B
#3	22"	28"	17"	22"	19"	24"	15"	19"
#4	29"	37"	22"	29"	25"	32"	19"	25"
#5	36"	47"	28"	36"	31"	40"	24"	31"
#6	43"	56"	33"	43"	37"	48"	29"	37"
#7	63"	81"	48"	63"	54"	70"	42"	54"
#8	72"	93"	55"	72"	62"	80"	48"	62"
#9	81"	105"	62"	81"	70"	91"	54"	70"
#10	91"	118"	70"	91"	79"	102"	61"	79"
#11	101"	131"	78"	101"	87"	113"	67"	87"

1) TOP BARS ARE HORIZONTAL REINFORCEMENT WITH MORE THAN 12" OF CONCRETE CAST BELOW THE REINFORCEMENT.

2) MASONRY REINFORCING LAP SPLICE LENGTHS SHALL BE 48x BAR DIAMETER.

ANCHOR BOLT LENGTH SCHEDULE

ANCHOR BOLT DIAM. (IN)	EMBEDMENT DEPTH (IN)	PROJECTION LENGTH (IN)	TOTAL LENGTH (IN)
1/2	6	1.5	7.5
5/8	10	3	13

ALL ANCHOR BOLTS TO BE ASTM F1554 GR 36 UNLESS SPECIFIED OTHERWISE ON THE METAL BUILDING ANCHOR BOLT SHOP DRAWINGS. ALL 5/8" ANCHOR BOLTS TO HAVE OVERSIZE WASHERS TACK WELDED TO THE BOLT HEAD THAT IS CAST INTO THE CONCRETE.

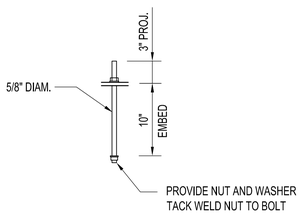

5/8" ANCHOR BOLT

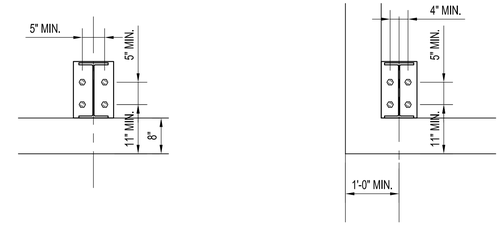

METAL BUILDING ANCHOR BOLT LAYOUT DETAILS

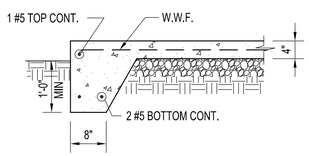

TYPICAL TURNDOWN SLAB DETAIL

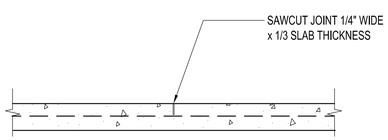

SAWED CONTROL JOINT

SAW JOINTS WITHIN 8 HOURS AFTER CONCRETE IS PLACED.

TYPICAL SLAB CONTROL JOINT DETAILS

SEE PLAN FOR SPACING. HAND-TOOL AREAS INACCESSIBLE WITH SAW

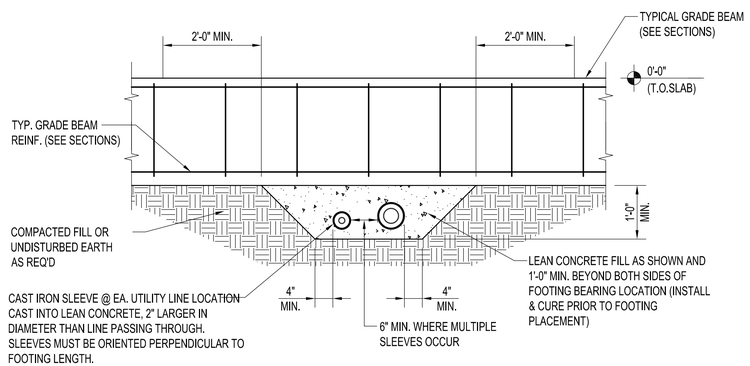

TYPICAL DETAIL FOR UTILITIES PASSING BELOW GRADE BEAMS

1. CONTRACTOR'S OPTION TO STEP FOOTINGS BELOW UTILITIES IN LIEU OF THIS DETAIL.
2. COORD. UTILITY LOCATIONS W/ CIVIL, MECHANICAL, PLUMBING, & ELECTRICAL DWGS.
3. UTILITIES SHALL NOT PASS BELOW COLUMN FOOTINGS.

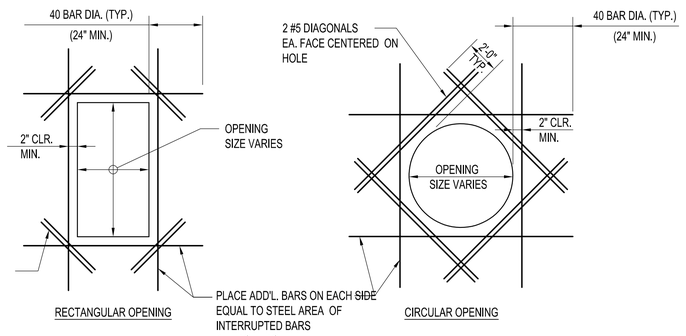

TYPICAL DETAIL OF ADD'L. REINF. AROUND OPENINGS IN CONCRETE WALLS AND SLABS

NOTE: COORD. W/ MECH. & EQUIPMENT DWGS. FOR ALL OPENING SIZES & LOCATIONS

PRM STRUCTURAL ENGINEERING
4835 University Sq., Suite 17,
Huntsville, AL 35816
Phone: (256) 652-6818
Project No. 2211

PHILIP R. MATTHEWS
No. 23391
PROFESSIONAL
ENGINEER
7-25-22

NOLA VANPEURSEM
ARCHITECTS, PC
MEMBER OF THE AMERICAN INSTITUTE OF ARCHITECTS
301 JEFFERSON STREET
HUNTSVILLE, ALABAMA 35801
(256) 533-6617
NV@ARCHITECTS.COM

THIS DRAWING MAY NOT BE REPRODUCED IN WHOLE OR IN PART WITHOUT THE CONSENT OF NOLA|VANPEURSEM ARCHITECTS

MADISON COUNTY SCHOOLS

CAREER TECH CENTER
MACHINE SHOP

1275 JORDAN ROAD
HUNTSVILLE, ALABAMA 35811

JOB NUMBER
22256

ALM / PRM / 07/26/2022
DRAWN - CHECKED - DATE

REVISIONS
No. Description Date

SHEET TITLE
TYPICAL DETAILS

SHEET NUMBER
S-2.1
OF
5

STATEMENT OF SPECIAL INSPECTIONS

Project:
Project Address:
Permit Applicant:
Applicant Address:
Owner:
Owner Address:

Registered Design Professionals (RDP):

Architect*
Geotechnical Engineer:
Structural Engineer:
Mechanical Engineer:
Electrical Engineer:

This statement of special Inspections is submitted as a condition for permit issuance in accordance with Chapter 17 of the International Building Code. It includes a *Schedule of Special Inspections* applicable to the above referenced project as well as the identity of the individuals, agencies, or firms intended to be retained for conducting these inspections.

The Special Inspector(s) shall keep records of all inspections and shall furnish interim inspection reports to the building official and to the registered design professional in responsible charge at a frequency agreed upon by the permit applicant and building official prior to the start of work. Discrepancies shall be brought to the immediate attentions of the contractor for correction. If the discrepancies are not corrected the discrepancies shall be brought to the attention of the building official and the registered design professional in responsible charge prior to completion of that phase of work. A *Final Report of Special Inspections* documenting required inspections and correction of any discrepancies noted in the inspections shall be submitted by each agent at the completion of that phase of work.

Maximum frequency of interim report submittals shall be less than weekly.

The Special Inspection program does not relieve the contractor of the responsibility to comply with the Contract Documents. Jobsite safety and means and methods of construction are solely the the responsibility of the Contractor.

Owner's Acknowedgement:

Signature Date

Building Official's Acceptance:

Signature Date

Permit No.

Frequency of interim report submittals to building official:
❑ Monthly ❑ Bi-Monthly ❑ Upon Completion ❑ Per Attached Schedule

RDP in Responsible Charge

FINAL REPORT OF SPECIAL INSPECTIONS

Project:
Project Address:
Testing / Inspection Agent:
Testing / Inspection Agent Address:
Scope of Testing / Inspections:

To the best of my information, knowedge, and belief, the special inspections or testing required for this project, and designated for this Agent in the *Schedule of Special Inspections* submitted for permit, have been completed in accordance with the contract documents.

Interim reports submitted prior to this final report and numbered ____ to ____, form a basis for, and are to be considered an integral part of this final report. The following discrepancies that were outstanding since the last interim report dated ____ have been corrected:

(Attache 8 1/2" X 11" continuation sheet(s) if required to complete the description of corrections)

Prepared By:

Type or print name

Signature Date

Special Inspector's Seal

(Licensed Professional Engineer)

REQUIRED VERIFICATION AND INSPECTION OF CONCRETE CONSTRUCTION **TABLE 1704.4**

VERIFICATION AND INSPECTION	CONTINUOUS	PERIODIC	REFERENCED STANDARD (a)	IBC REFERENCE
1. Inspection of reinforcing steel, including prestressing tendons, and placement.	-	X	ACI 318: 3.5, 7.1-7.7	1913.4
2. Inspection of reinforcing steel welding in accordance with Table 1704.3, Item 5b.	-	-	AWS D1.4 CI 318: 3.5.2	-
3. Inspect bolts to be installed in concrete prior to and during placement of concrete where allowable loads have been increased.	X	-	-	1911.5
4. Verifying use of required design mix.	-	X	ACI 318: Ch. 4, 5.2-5.4	1904.2.2, 1913.2, 1913.3
5. At the time fresh concrete is sampled to fabricate specimens for strength tests, perform slump and air content tests, and determine the temperature of the concrete.	X	-	ASTM C 172 ASTM C 31 ACI 318: 5.6, 5.8	1913.1
6. Inspection of concrete and shotcrete placement for proper application techniques.	X	-	ACI 318: 5.9, 5.10	1913.6, 1913.7, 1913.8
7. Inspection for maintenance of specified curing temperature and techniques.	-	X	ACI 318: 5.11-5.13	1913.9
8. Inspection of prestressed concrete:				
a. Application of prestressing forces.	X	-	ACI 318: 18.20 ACI 318: 18.18.4	-
b. Grouting of bonded prestressing tendons in the seismic-force-resisting system.	X	-		-
9. Erection of precast concrete members.	-	X	ACI 318: Ch. 16	-
10. Verification of in-situ concrete strength, prior to stressing of tendons in posttensioned concrete and prior to removal of shores and forms from beams and structural slabs.	-	X	ACI 318: 6.2	-
11. Inspect formwork for shape, location and dimensions of the concrete member being formed.	-	X	ACI 318: 6.1.1	-

REQUIRED VERIFICATION AND INSPECTION OF SOILS **TABLE 1704.7**

VERIFICATION AND INSPECTION TASK	CONTINUOUS DURING TASK LISTED	PERIODICALLY DURING TASK LISTED
1. Verify materials below footings are adequate to achieve the design bearing capacity.	-	X
2. Verify excavations are extended to proper depth and have reached proper material.	-	X
3. Perform classification and testing of controlled fill materials.	-	X
4. Verify use of proper materials, densities and lift thicknesses during placement and compaction of controlled fill.	X	-
5. Prior to placement of controlled fill, observe subgrade and verify that site has been prepared properly.	-	X

PRM STRUCTURAL ENGINEERING
4835 University Sq., Suite 17,
Huntsville, AL 35816
Phone: (256) 652-6818
Project No. 2211

No. 23391 PROFESSIONAL ENGINEER PHILLIP R MATTHEWS
7-25-22

NOLA VANPEURSEM ARCHITECTS, PC
MEMBER OF THE AMERICAN INSTITUTE OF ARCHITECTS
301 JEFFERSON STREET
HUNTSVILLE, ALABAMA 35801
(256) 533-6617
NV@ARCHITECTS.COM

THIS DRAWING MAY NOT BE REPRODUCED IN WHOLE OR IN PART WITHOUT THE CONSENT OF NOLA|VANPEURSEM ARCHITECTS

MADISON COUNTY SCHOOLS
CAREER TECH CENTER
MACHINE SHOP
1275 JORDAN ROAD
HUNTSVILLE, ALABAMA 35811

JOB NUMBER
22256

ALM / PRM / 07/26/2022
DRAWN - CHECKED - DATE

REVISIONS
No. Description Date

SHEET TITLE
SPECIAL INSPECTIONS

SHEET NUMBER
S-2.2
OF
5

PRM STRUCTURAL ENGINEERS
4835 University Sq., Suite 17,
Huntsville, AL 35816
Phone: (256) 652-6818
Project No. 2211

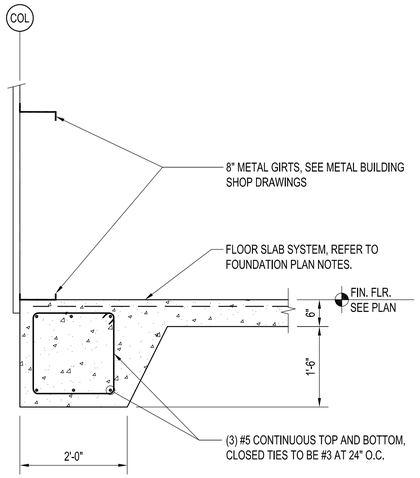

SECTION A
SCALE 3/4" = 1'-0" S-3.0

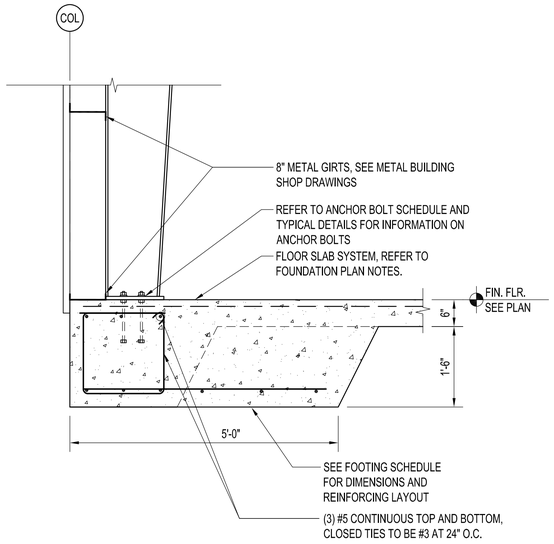

SECTION B
SCALE 3/4" = 1'-0" S-3.0

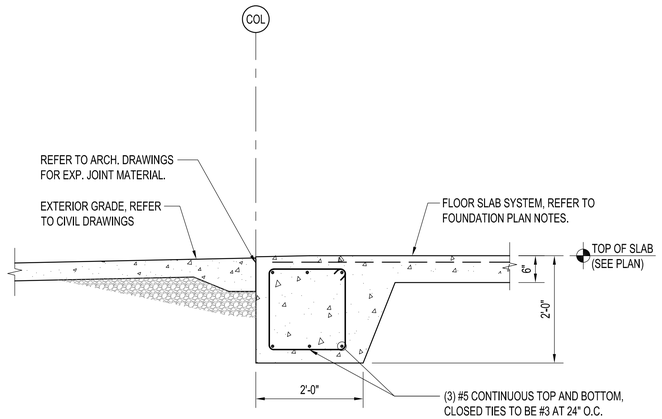

SECTION C
SCALE 3/4" = 1'-0" S-3.0

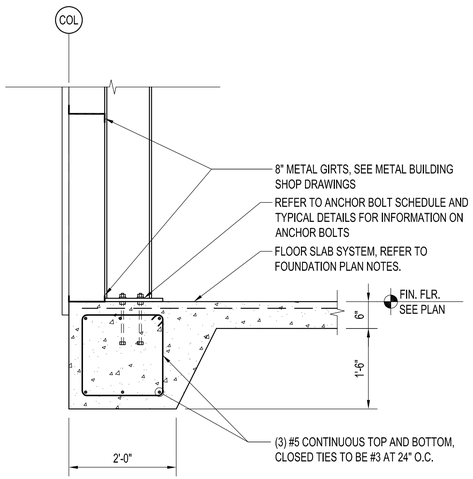

SECTION D
SCALE 3/4" = 1'-0" S-3.0

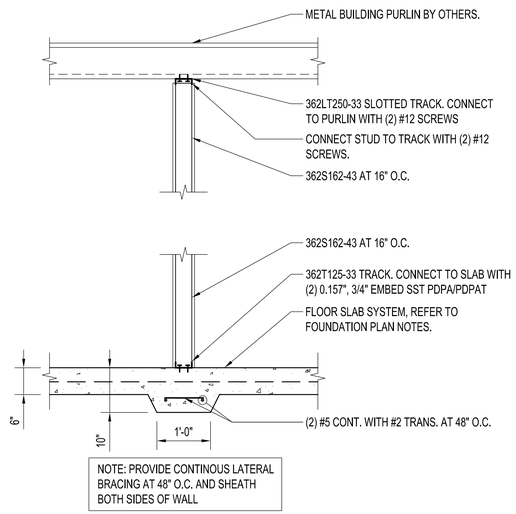

NOTE: PROVIDE CONTINOUS LATERAL BRACING AT 48" O.C. AND SHEATH BOTH SIDES OF WALL

SECTION E
SCALE 3/4" = 1'-0" S-3.0

NOLA VANPEURSEM ARCHITECTS, PC
MEMBER OF THE AMERICAN INSTITUTE OF ARCHITECTS
301 JEFFERSON STREET
HUNTSVILLE, ALABAMA 35801
(256) 533-6617
NV@ARCHITECTS.COM

THIS DRAWING MAY NOT BE REPRODUCED IN WHOLE OR IN PART WITHOUT THE CONSENT OF NOLA|VANPEURSEM ARCHITECTS

MADISON COUNTY SCHOOLS

CAREER TECH CENTER
MACHINE SHOP

1275 JORDAN ROAD
HUNTSVILLE, ALABAMA 35811

JOB NUMBER
22256

ALM / PRM / 07/26/2022
DRAWN - CHECKED - DATE

REVISIONS
No. Description Date

SHEET TITLE
FOUNDATION SECTIONS

SHEET NUMBER
S-3.0
OF
5

GENERAL PLUMBING NOTES

1. THESE DRAWINGS ARE DIAGRAMMATICAL ONLY AND ARE AN INTERPRETATION ON HOW TO INSTALL SYSTEM COMPONENTS AS INTENDED AND SHOWN ON FLOOR PLAN DRAWINGS IN A MANNER TO ELIMINATE CONFLICTS BETWEEN OTHER TRADES AND ALLOW FOR CLEARANCES, ETC. THEY MAY BE REQUIRED TO BE SHIFTED AS DETERMINED BY FIELD CONDITIONS. REFER TO ALL FLOOR PLAN DRAWINGS FOR NOTATIONS, SIZES, ETC. THE DRAWINGS DO NOT SHOW ALL COMPONENTS REQUIRED FOR A COMPLETE INSTALLATION (HANGERS, INSULATION, ETC.). IT IS THE RESPONSIBILITY OF THE CONTRACTOR TO PROVIDE ALL MATERIALS AND LABOR NECESSARY TO INSTALL THE FIXTURES, EQUIPMENT, PIPING, ETC. TO MEET THE INTENT OF THE DRAWINGS. REFER TO ENTIRE CONTRACT DOCUMENT SET FOR ALL COMPONENTS REQUIRED (FLOOR PLAN DRAWINGS, SPECIFICATIONS, SCHEDULES, DETAILS, ETC.).
2. THIS CONTRACTOR IS RESPONSIBLE FOR REVIEWING ALL DRAWINGS AND SPECIFICATIONS OF ALL DISCIPLINES FOR ANY AND ALL WORK THAT WILL IMPACT THIS CONTRACTOR AND WILL BE THE RESPONSIBILITY OF THIS CONTRACTOR TO PROVIDE SAID WORK.
3. CERTAIN AREAS WILL REQUIRE EXTENSIVE COORDINATION BETWEEN ALL TRADES. CONTRACTOR(S) SHALL COORDINATE PRIOR/DURING CONSTRUCTION TO ELIMINATE ANY CONFLICTS.
4. THE BOTTOM OF ALL PIPING TO BE COORDINATED WITH ROOM FINISH SCHEDULE FOR CEILING HEIGHTS AND SHALL BE A MINIMUM OF 6" ABOVE THE CEILING GRID. ALL SERVICEABLE ITEMS SUCH AS EQUIPMENT, VALVES, CIRCUIT SETTERS, ETC. SHALL BE LOCATED NO MORE THAN 24" ABOVE THE CEILING GRID.
5. SLEEVE ALL FOUNDATION WALL PENETRATIONS WITH SCH. 40 SLEEVE 2 PIPE SIZES LARGER THAN SERVICE PIPE.

PLUMBING NOTATION LEGEND

CO = CLEAN OUT
CW = COLD WATER
ECO = EXTERIOR CLEANOUT
EOS = EMERGENCY OVERFLOW SPOUT
EWH = EXTERIOR WALL HYDRANT
FCO = FLOOR CLEANOUT
FD = FLOOR DRAIN
FS = FLOOR SINK
HW = HOT WATER
HWR = HOT WATER RETURN
OFD = OVERFLOW DRAIN
OST = OIL SEPARATOR TANK
RWL = RAIN WATER LEADER
TW = TEMPERED WATER
W = WASTE
WCO = WALL CLEAN OUT
V = VENT
VTR = VENT THRU ROOF

PLUMBING SYMBOL LEGEND

= NEW WORK (EQUIPMENT, PIPE, ETC.)
= EXISTING WORK TO REMAIN
= EXISTING WORK TO BE REMOVED
= COLD WATER PIPING ABOVE GRADE
= HOT WATER PIPING ABOVE GRADE
= HOT WATER RETURN PIPING
= COLD OR HOT WATER BELOW GRADE
= WASTE / RAIN WATER PIPING
= VENT PIPING
= DEMOLITION KEY NOTE
= PIPE DROP / RISE

Fixture Connection Schedule

Notes:
1. Coordinate mounting height of all wall mounted fixtures with the Architectural Drawings.
2. Coordinate mounting height of all sensor operated flush valves with grab bars and accessories so that sensor operation is not empeded by any obstructions.
3. Back to back lavatories, urinals, water closets, etc. shall be connected with a combination wye & 1/8 bend. Sanitary tees / crosses shall not be allowed.
4. Flush valve handle shall be installed on the wide side (open side) of the toilet stall for ADA installations.

Fixture Symbol	Fixture Name	Fixture Description	Connection Sizes				
			CW	HW	Trap	Waste	Vent
P-1	(ADA) WATER CLOSET	ADA, FLOOR MOUNTED, FLUSH VALVE	1 1/2"			4"	2"
P-2	LAVATORY	ADA, WALL HUNG, VITREOUS CHINA	1/2"	1/2"		2"	2"
P-3	MOP SINK	TERRAZZO BASE, WALL MOUNTED FAUCET	3/4"	3/4"		3"	2"
P-4	SCULLERY SINK	STAINLESS STEEL, DOUBLE COMPARTMENT	3/4"	3/4"		2"	2"
P-5	ELECTRIC WATER COOLER	ADA, WALL HUNG, BOTTLE FILLER	1/2"			2"	2"
P-6	EMERGENCY SHOWER / EYE WASH	SEE SPECIFICATIONS					
P-7	FLOOR DRAIN	CAST IRON BODY				4"	2"
P-8	RECESSED FLOOR DRAIN	CAST IRON BODY				4"	2"
P-9	WATER HEATER	119 GAL, 15kW, 480/3	1"	1"			
P-10	OIL SEPARATOR TANK	SEE SPECIFICATIONS				4"	
P-11	EXTERIOR WALL HYDRANT	SEE SPECIFICATIONS	3/4"				

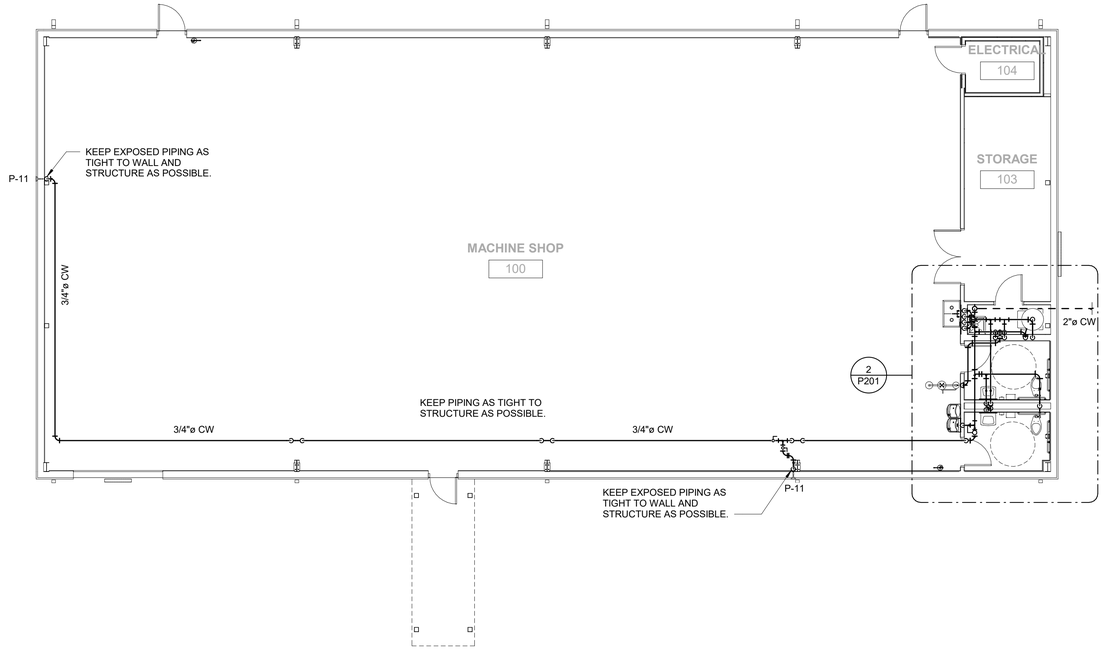

Plumbing - 1st Floor Domestic Water

1/8" = 1'-0"

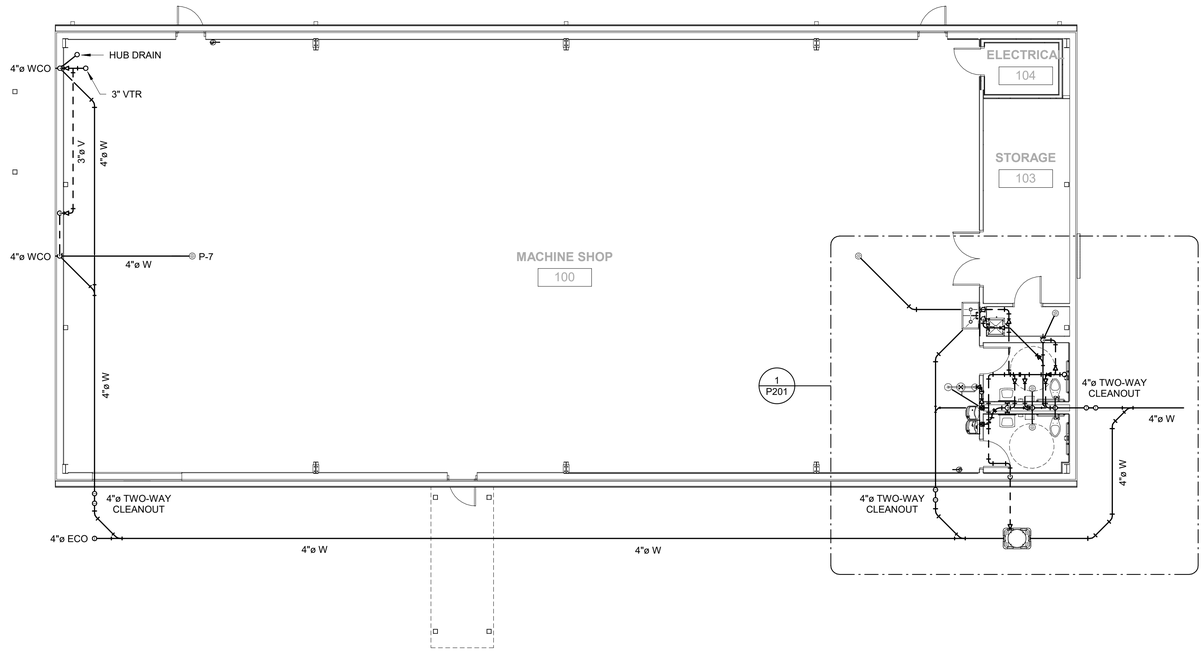

Plumbing - 1st Floor Waste & Vent

1/8" = 1'-0"

GRAPHIC SCALE: 1/8" = 1'-0"
0 2' 4' 6' 8' 12' 16' 24' 32'

mds
Mechanical Design Services, Inc.
305 Jefferson St. N, Suite D, Huntsville, AL 35801
(256) 534-5150 mds@mdseng.com

ALABAMA LICENSED PROFESSIONAL ENGINEER JOHNNY N. ECHOLS 25304 07/26/2022

NOLA VANPEURSEM ARCHITECTS, PC
MEMBER OF THE AMERICAN INSTITUTE OF ARCHITECTS
301 JEFFERSON STREET
HUNTSVILLE, ALABAMA 35801
(256) 533-6617
NVPARCHITECTS.COM

THIS DRAWING MAY NOT BE REPRODUCED IN WHOLE OR IN PART WITHOUT THE CONSENT OF NOLA/VANPEURSEM ARCHITECTS

MADISON COUNTY SCHOOLS
CAREER TECH CENTER
MACHINE SHOP
1275 JORDAN ROAD
HUNTSVILLE, ALABAMA 35811

JOB NUMBER
22256

PBE / JJP | JNE | 07/26/2022
DRAWN - CHECKED - DATE

REVISIONS
No. Description Date

SHEET TITLE
PLUMBING FLOOR PLAN

SHEET NUMBER
P101
OF

Fixture Connection Schedule

Notes:
1. Coordinate mounting height of all wall mounted fixtures with the Architectural Drawings.
2. Coordinate mounting height of all sensor operated flush valves with grab bars and accessories so that sensor operation is not empeded by any obstructions.
3. Back to back lavatories, urinals, water closets, etc. shall be connected with a combination wye & 1/8 bend. Sanitary tees / crosses shall not be allowed.
4. Flush valve handle shall be installed on the wide side (open side) of the toilet stall for ADA installations.

Fixture Symbol	Fixture Name	Fixture Description	Connection Sizes				
			CW	HW	Trap	Waste	Vent
P-1	(ADA) WATER CLOSET	ADA, FLOOR MOUNTED, FLUSH VALVE	1 1/2"			4"	2"
P-2	LAVATORY	ADA, WALL HUNG, VITREOUS CHINA	1/2"	1/2"		2"	2"
P-3	MOP SINK	TERRAZZO BASE, WALL MOUNTED FAUCET	3/4"	3/4"		3"	2"
P-4	SCULLERY SINK	STAINLESS STEEL, DOUBLE COMPARTMENT	3/4"	3/4"		2"	2"
P-5	ELECTRIC WATER COOLER	ADA, WALL HUNG, BOTTLE FILLER	1/2"			2"	2"
P-6	EMERGENCY SHOWER / EYE WASH	SEE SPECIFICATIONS					
P-7	FLOOR DRAIN	CAST IRON BODY				4"	2"
P-8	RECESSED FLOOR DRAIN	CAST IRON BODY				4"	2"
P-9	WATER HEATER	119 GAL, 15kW, 480/3	1"	1"			
P-10	OIL SEPARATOR TANK	SEE SPECIFICATIONS				4"	
P-11	EXTERIOR WALL HYDRANT	SEE SPECIFICATIONS	3/4"				

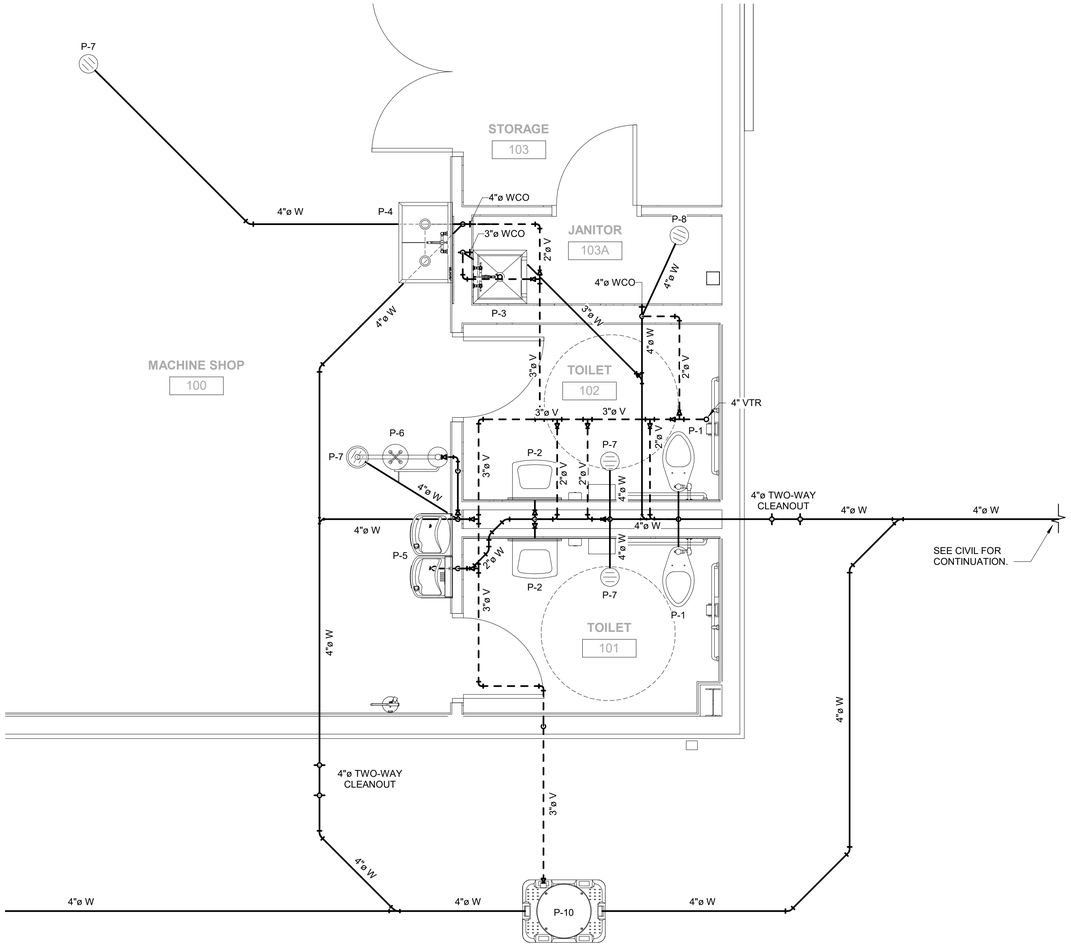

Plumbing - 1st Floor Waste - Callout 1
3/8" = 1'-0"

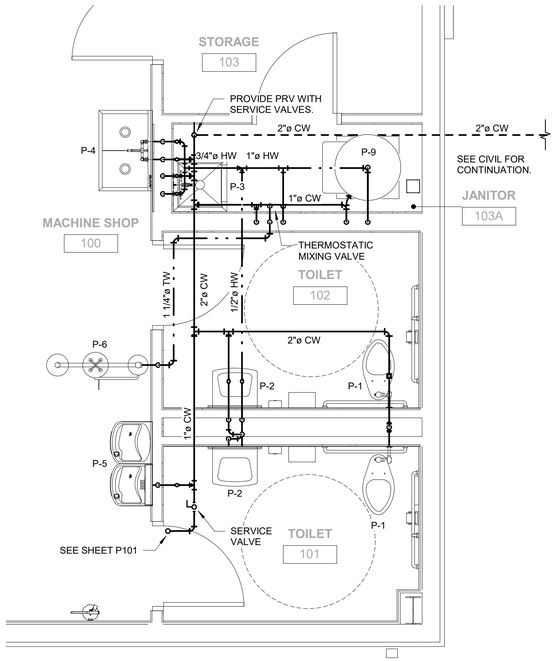

Plumbing - 1st Floor Domestic Water - Callout 2
3/8" = 1'-0"

GRAPHIC SCALE: 3/8" = 1'-0"
0 4' 8' 12' 16' 24' 32' 40'

mds
Mechanical Design Services, Inc.
305 Jefferson St. N, Suite D, Huntsville, AL 35801
(256) 534-5150 mds@mdseng.com

ALABAMA LICENSED PROFESSIONAL ENGINEER JOHNNY N. ECHOLS
07/26/2022

NOLA VANPEURSEM ARCHITECTS, PC
MEMBER OF THE AMERICAN INSTITUTE OF ARCHITECTS
301 JEFFERSON STREET
HUNTSVILLE, ALABAMA 35801
(256) 533-6617
NVPARCHITECTS.COM

THIS DRAWING MAY NOT BE REPRODUCED IN WHOLE OR IN PART WITHOUT THE CONSENT OF NOLA|VANPEURSEM ARCHITECTS

MADISON COUNTY SCHOOLS
CAREER TECH CENTER MACHINE SHOP
1275 JORDAN ROAD
HUNTSVILLE, ALABAMA 35811

JOB NUMBER
22256

PBE / JJP / JNE / 07/26/2022
DRAWN - CHECKED - DATE

REVISIONS
No. Description Date

SHEET TITLE
PLUMBING ENLARGED PLANS

SHEET NUMBER
P201
OF

Fixture Connection Schedule

Notes:
1. Coordinate mounting height of all wall mounted fixtures with the Architectural Drawings.
2. Coordinate mounting height of all sensor operated flush valves with grab bars and accessories so that sensor operation is not empeded by any obstructions.
3. Back to back lavatories, urinals, water closets, etc. shall be connected with a combination wye & 1/8 bend. Sanitary tees / crosses shall not be allowed.
4. Flush valve handle shall be installed on the wide side (open side) of the toilet stall for ADA installations.

Fixture Symbol	Fixture Name	Fixture Description	Connection Sizes				
			CW	HW	Trap	Waste	Vent
P-1	(ADA) WATER CLOSET	ADA, FLOOR MOUNTED, FLUSH VALVE	1 1/2"			4"	2"
P-2	LAVATORY	ADA, WALL HUNG, VITREOUS CHINA	1/2"	1/2"		2"	2"
P-3	MOP SINK	TERRAZZO BASE, WALL MOUNTED FAUCET	3/4"	3/4"		3"	2"
P-4	SCULLERY SINK	STAINLESS STEEL, DOUBLE COMPARTMENT	3/4"	3/4"		2"	2"
P-5	ELECTRIC WATER COOLER	ADA, WALL HUNG, BOTTLE FILLER	1/2"			2"	2"
P-6	EMERGENCY SHOWER / EYE WASH	SEE SPECIFICATIONS					
P-7	FLOOR DRAIN	CAST IRON BODY				4"	2"
P-8	RECESSED FLOOR DRAIN	CAST IRON BODY				4"	2"
P-9	WATER HEATER	119 GAL, 15kW, 480/3	1"	1"			
P-10	OIL SEPARATOR TANK	SEE SPECIFICATIONS				4"	
P-11	EXTERIOR WALL HYDRANT	SEE SPECIFICATIONS	3/4"				

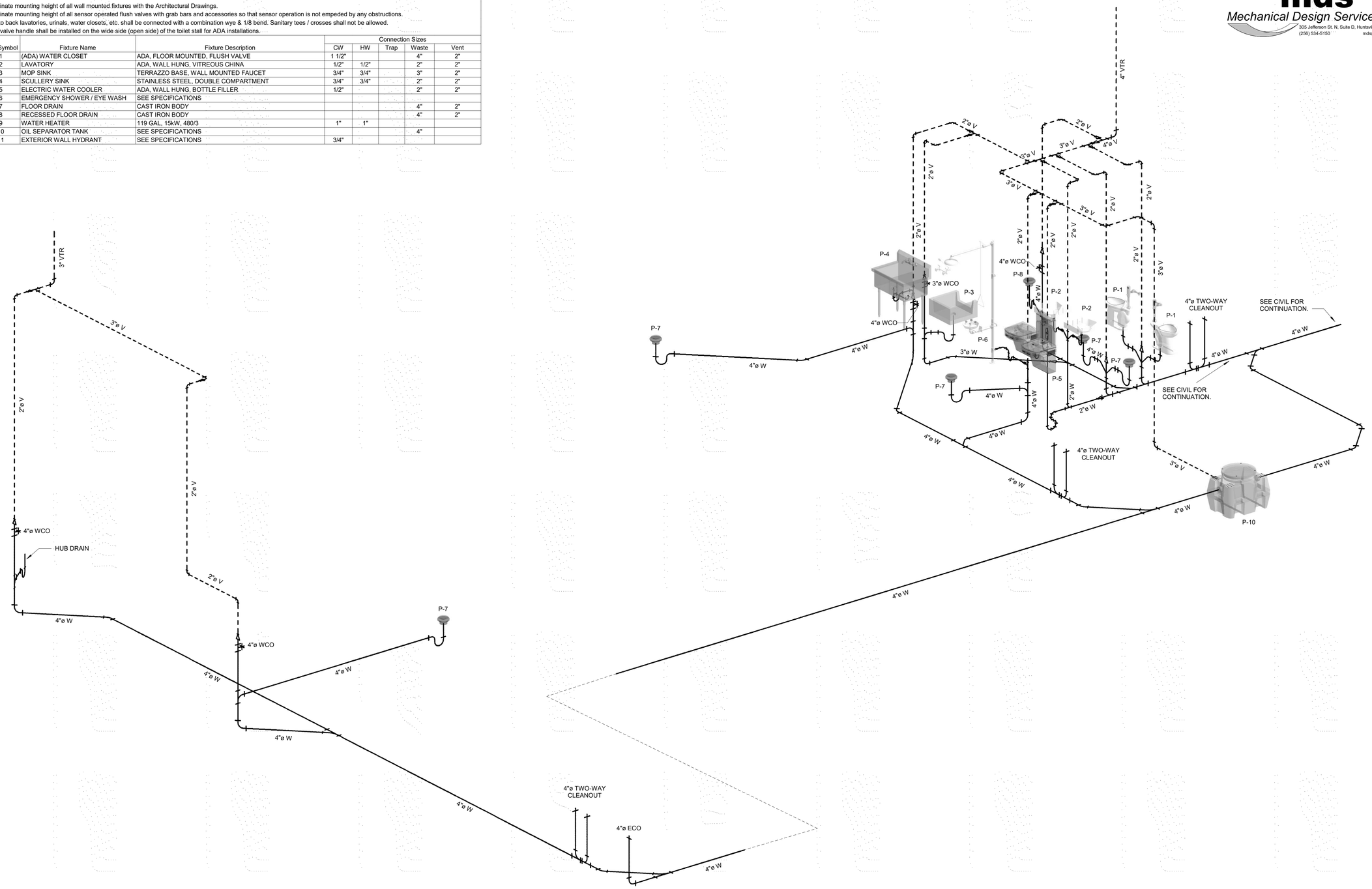

Riser Diagram - Waste & Vent

Not To Scale

mds
Mechanical Design Services, Inc.
305 Jefferson St. N, Suite D, Huntsville, AL 35801
(256) 534-5150 mds@mdseng.com

ALABAMA LICENSED PROFESSIONAL ENGINEER
07/26/2022
JOHNNY N. ECHOLS

NOLA VANPEURSEM
ARCHITECTS, PC
MEMBER OF THE AMERICAN INSTITUTE OF ARCHITECTS
301 JEFFERSON STREET
HUNTSVILLE, ALABAMA 35801
(256) 533-6617
NVPARCHITECTS.COM

THIS DRAWING MAY NOT BE REPRODUCED IN WHOLE OR IN PART WITHOUT THE CONSENT OF NOLA|VANPEURSEM ARCHITECTS

MADISON COUNTY SCHOOLS
CAREER TECH CENTER MACHINE SHOP
1275 JORDAN ROAD
HUNTSVILLE, ALABAMA 35811

JOB NUMBER
22256

PBE / JJP / JNE / 07/26/2022
DRAWN - CHECKED - DATE

REVISIONS
No. Description Date

SHEET TITLE
PLUMBING ISOMETRICS

SHEET NUMBER
P301
OF

Fixture Connection Schedule

Notes:
1. Coordinate mounting height of all wall mounted fixtures with the Architectural Drawings.
2. Coordinate mounting height of all sensor operated flush valves with grab bars and accessories so that sensor operation is not empeded by any obstructions.
3. Back to back lavatories, urinals, water closets, etc. shall be connected with a combination wye & 1/8 bend. Sanitary tees / crosses shall not be allowed.
4. Flush valve handle shall be installed on the wide side (open side) of the toilet stall for ADA installations.

Fixture Symbol	Fixture Name	Fixture Description	Connection Sizes				
			CW	HW	Trap	Waste	Vent
P-1	(ADA) WATER CLOSET	ADA, FLOOR MOUNTED, FLUSH VALVE	1 1/2"			4"	2"
P-2	LAVATORY	ADA, WALL HUNG, VITREOUS CHINA	1/2"	1/2"		2"	2"
P-3	MOP SINK	TERRAZZO BASE, WALL MOUNTED FAUCET	3/4"	3/4"		3"	2"
P-4	SCULLERY SINK	STAINLESS STEEL, DOUBLE COMPARTMENT	3/4"	3/4"		2"	2"
P-5	ELECTRIC WATER COOLER	ADA, WALL HUNG, BOTTLE FILLER	1/2"			2"	2"
P-6	EMERGENCY SHOWER / EYE WASH	SEE SPECIFICATIONS					
P-7	FLOOR DRAIN	CAST IRON BODY				4"	2"
P-8	RECESSED FLOOR DRAIN	CAST IRON BODY				4"	2"
P-9	WATER HEATER	119 GAL, 15kW, 480/3	1"	1"			
P-10	OIL SEPARATOR TANK	SEE SPECIFICATIONS				4"	
P-11	EXTERIOR WALL HYDRANT	SEE SPECIFICATIONS	3/4"				

WATER HAMMER ARRESTOR SCHEDULE

MARK	MANUFACTURER	SERIES	SIZE	FIXTURE UNIT CAPACITY	CONNECTION SIZE
A	SIOUX CHIEF	650	100	1 - 11	3/4"
B	SIOUX CHIEF	650	200	12 - 32	3/4"
C	SIOUX CHIEF	650	300	33 - 60	1"
D	SIOUX CHIEF	650	400	61 - 113	1"
E	SIOUX CHIEF	650	500	114 - 154	1"
F	SIOUX CHIEF	650	600	155 - 330	1"

NOTES:

1. WATER HAMMER ARRESTORS HAVE BEEN SHOWN GENERALLY ON THE PIPING DIAGRAMS. THE PLUMBING CONTRACTOR SHALL BE RESPONSIBLE FOR INSTALLING ADDITIONAL ARRESTORS AS NECESSARY TO CONFORM TO IPC, LOCAL CODE AND THE MANUFACTURER'S INSTALLATION REQUIREMENTS BASED ON THE LENGTH OF PIPE AND THE TOTAL QUANTITY OF FIXTURE UNITS ON EACH BRANCH LINE.
2. ARRESTORS SPECIFIED ARE RATED FOR THE REQUIRED TEST PRESSURES OF THE HOT AND COLD WATER PIPING SYSTEMS. ALL ARRESTORS SHALL BE INSTALLED WHEN PIPING IS TESTED.
3. PROVIDE AN ISOLATION VALVE UNDER EVERY ARRESTOR INSTALLED.

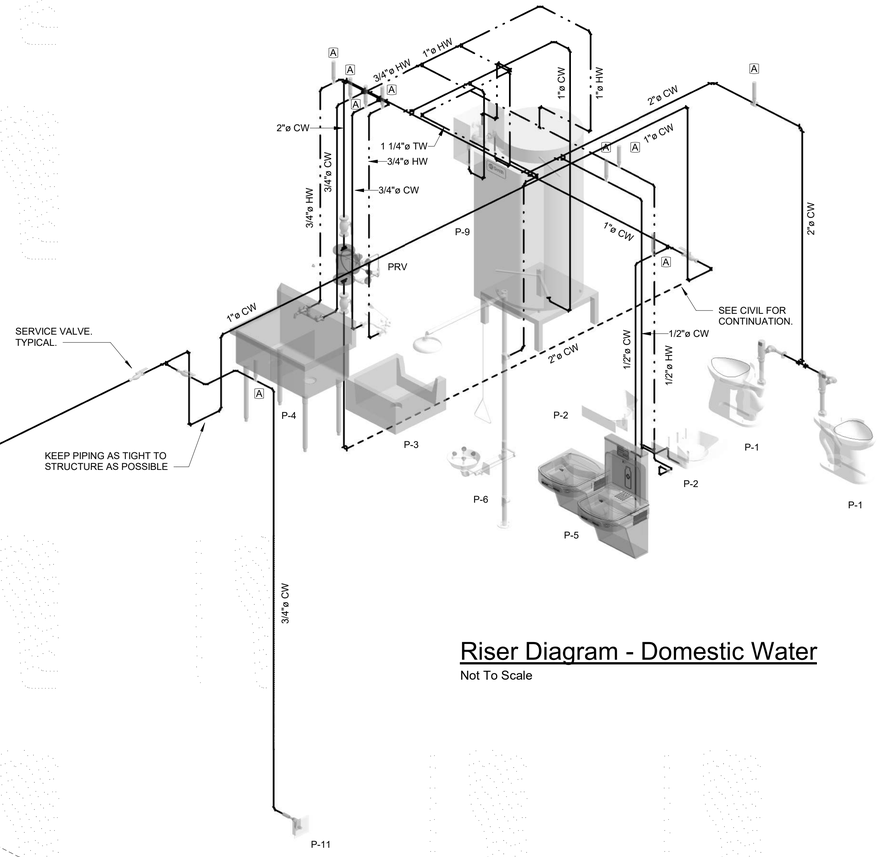

Riser Diagram - Domestic Water

Not To Scale

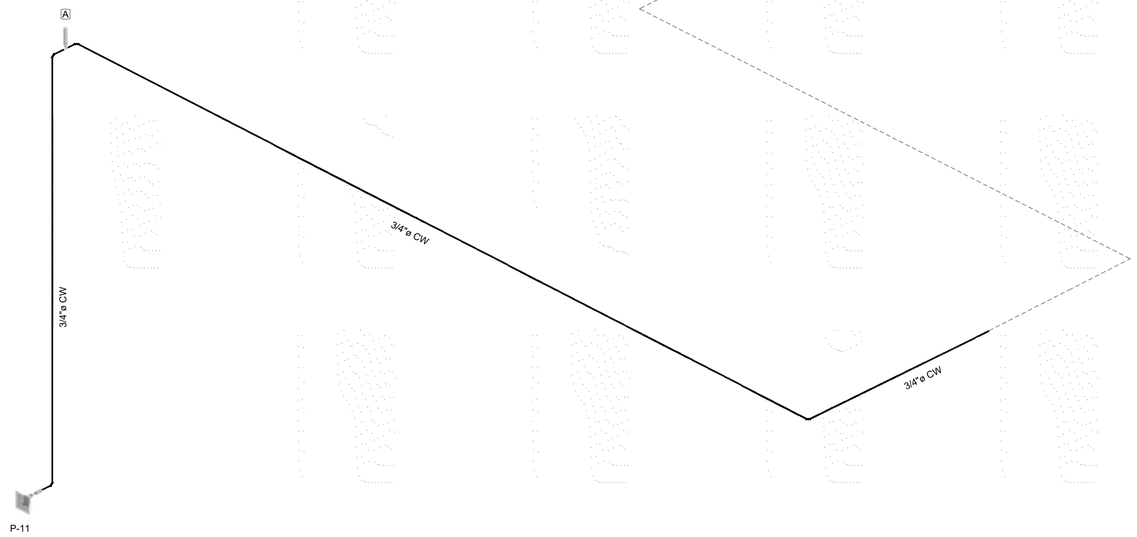

mds
Mechanical Design Services, Inc.
305 Jefferson St. N, Suite D, Huntsville, AL 35801
(256) 534-5150 mds@mdseng.com

ALABAMA LICENSED PROFESSIONAL ENGINEER JOHNNY N. ECHOLS 25304 07/26/2022

NOLA VANPEURSEM ARCHITECTS, PC
MEMBER OF THE AMERICAN INSTITUTE OF ARCHITECTS
301 JEFFERSON STREET HUNTSVILLE, ALABAMA 35801
(256) 533-6617 NVPARCHITECTS.COM

THIS DRAWING MAY NOT BE REPRODUCED IN WHOLE OR IN PART WITHOUT THE CONSENT OF NOLA/VANPEURSEM ARCHITECTS

MADISON COUNTY SCHOOLS

CAREER TECH CENTER MACHINE SHOP

1275 JORDAN ROAD
HUNTSVILLE, ALABAMA 35811

JOB NUMBER
22256

PBE / JJP | JNE | 07/26/2022
DRAWN - CHECKED - DATE

REVISIONS
No. Description Date

SHEET TITLE
PLUMBING ISOMETRICS

SHEET NUMBER
P302
OF

mds
Mechanical Design Services, Inc.
305 Jefferson St. N, Suite D, Huntsville, AL 35801
(256) 534-5150 mds@mdseng.com

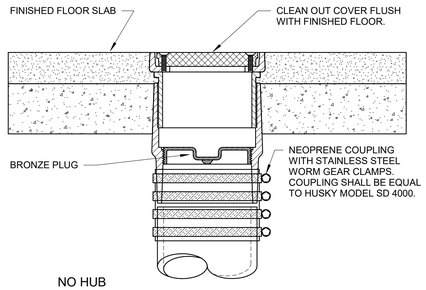

NO HUB
FLOOR CLEAN OUT DETAIL
NOT TO SCALE

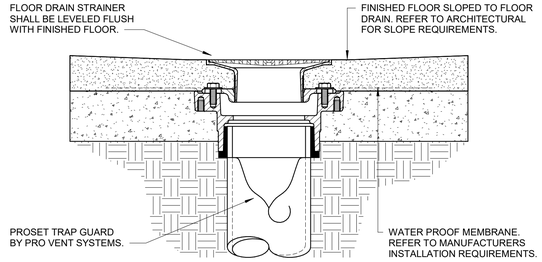

FLUSH TO GRADE STRAINER
FLOOR DRAIN DETAIL
NOT TO SCALE

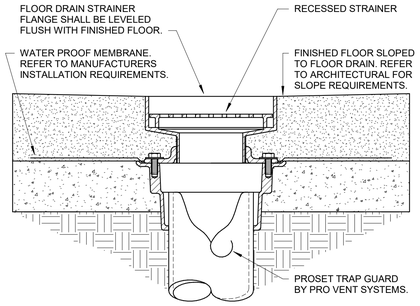

RECESSED STRAINER
FLOOR DRAIN DETAIL
NOT TO SCALE

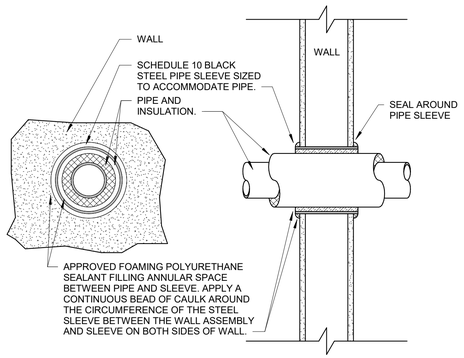

NON RATED WALL / ASSEMBLY
PIPE SLEEVE DETAIL
NOT TO SCALE

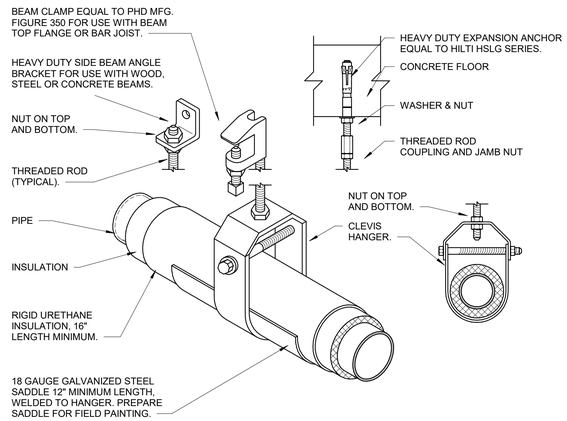

PIPE HANGER DETAIL
NOT TO SCALE

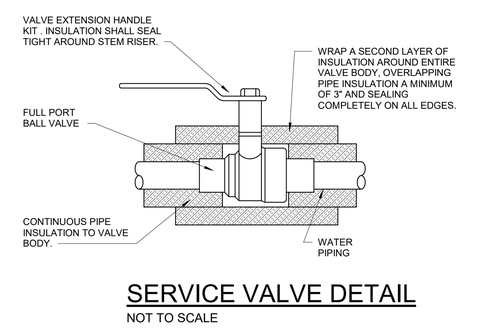

SERVICE VALVE DETAIL
NOT TO SCALE

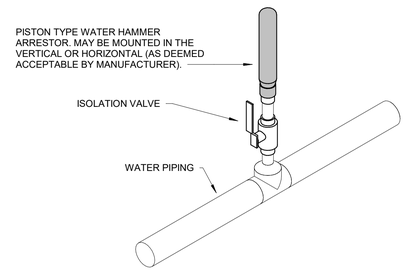

DOMESTIC WATER
WATER HAMMER ARRESTOR DETAIL
NOT TO SCALE

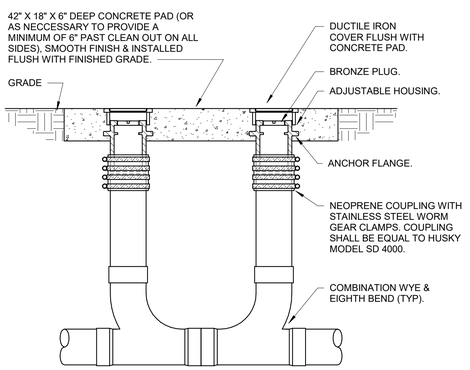

TWO WAY
EXTERIOR CLEANOUT DETAIL
NOT TO SCALE

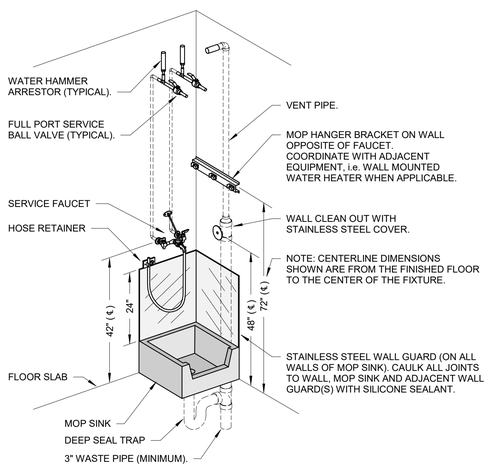

MOP SINK INSTALLATION DETAIL
NOT TO SCALE

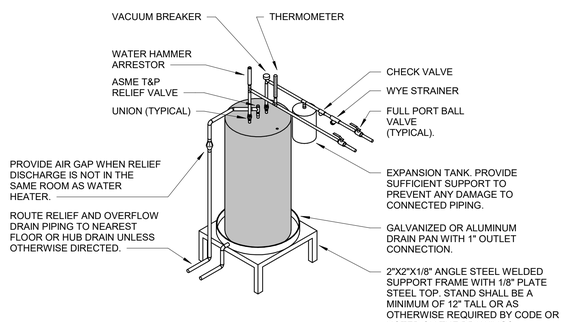

STAND MOUNT
WATER HEATER DETAIL
NOT TO SCALE

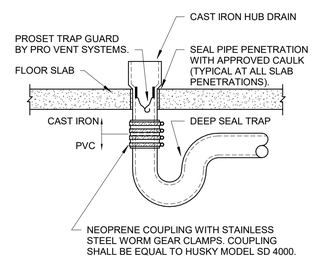

HUB DRAIN DETAIL
NOT TO SCALE

ALABAMA LICENSED PROFESSIONAL ENGINEER
07/26/2022
JOHNNY N. ECHOLS

NOLA VANPEURSEM ARCHITECTS, PC
MEMBER OF THE AMERICAN INSTITUTE OF ARCHITECTS
301 JEFFERSON STREET
HUNTSVILLE, ALABAMA 35801
(256) 533-6617
NVPARCHITECTS.COM

THIS DRAWING MAY NOT BE REPRODUCED IN WHOLE OR IN PART WITHOUT THE CONSENT OF NOLA/VANPEURSEM ARCHITECTS

MADISON COUNTY SCHOOLS
CAREER TECH CENTER
MACHINE SHOP
1275 JORDAN ROAD
HUNTSVILLE, ALABAMA 35811

JOB NUMBER
22256

PBE / JJP	JNE	07/26/2022
DRAWN	CHECKED	DATE

REVISIONS

No.	Description	Date

SHEET TITLE
PLUMBING DETAILS

SHEET NUMBER
P401
OF

GENERAL MECHANICAL NOTES

1. THIS CONTRACTOR IS RESPONSIBLE FOR REVIEWING ALL DRAWINGS AND SPECIFICATIONS OF ALL DISCIPLINES FOR ANY AND ALL WORK THAT WILL IMPACT THIS CONTRACTOR AND WILL BE THE RESPONSIBILITY OF THIS CONTRACTOR TO PROVIDE SAID WORK.
2. CERTAIN AREAS WILL REQUIRE EXTENSIVE COORDINATION BETWEEN ALL TRADES. CONTRACTOR(S) SHALL COORDINATE PRIOR/DURING CONSTRUCTION TO ELIMINATE ANY CONFLICTS.
3. THE LOCATION OF ALL CEILING MOUNTED AIR DISTRIBUTION DEVICES SHALL BE COORDINATED WITH THE ARCHITECTURAL REFLECTED CEILING PLAN AND SHALL AVOID CONFLICT WITH ALL CEILING DEVICES, MOUNTED LIGHTS, PROJECTORS, ETC.
4. ALL DUCT SIZES INDICATED ON THE DRAWINGS ARE FOR THE CLEAR INSIDE DIMENSION. CONTRACTOR SHALL INCREASE DUCT SIZE IF INTERIOR DUCT INSULATION IS CALL FOR ON THE DRAWINGS. THE SAME APPLIES FOR DOUBLE WALL SPIRAL DUCT.
5. THE BOTTOM OF ALL DUCTWORK AND PIPING TO BE COORDINATED WITH ROOM FINISH SCHEDULE FOR CEILING HEIGHTS AND SHALL BE A MINIMUM OF 6" ABOVE THE CEILING GRID. ALL SERVICEABLE ITEMS SUCH AS EQUIPMENT, VAV / VVT BOXES ACTUATORS, DAMPERS, VALVES, CONTROL DEVICES, CIRCUIT SETTERS, ETC. SHALL BE LOCATED NO MORE THAN 24" ABOVE THE CEILING GRID.
6. ALL DUCTS AND PIPING INDICATED ON THE DRAWINGS ARE DIAGRAMMATIC ONLY. THEY MAY BE REQUIRED TO BE SHIFTED, OFFSET OR INSTALLED HIGH IN BETWEEN THE JOISTS AS DETERMINED BY FIELD CONDITIONS. IT IS THE RESPONSIBILITY OF THE CONTRACTOR TO PROVIDE ALL MATERIALS AND LABOR NECESSARY TO INSTALL THE PIPING AND DUCTS TO MEET THE INTENT OF THE DRAWINGS.
7. ROUND BRANCH RUN-OUTS TO AIR DISTRIBUTION DEVICES ARE TO BE ENTIRELY SHEET METAL WITH THE EXCEPTION THAT UP TO FIVE FEET OF FLEX DUCT MAY BE USED ON EACH BRANCH UNLESS OTHERWISE INDICATED. ALL FLEX DUCT SHALL BE SUPPORTED INDEPENDENT OF THE CEILING, PIPING, CONDUITS, OTHER DUCTS, ETC. AND SHALL BE SUPPORTED IN SUCH A WAY AS TO AVOID KINKING OR OBSTRUCTION OF AIR FLOW.
8. THE MECHANICAL CONTRACTOR SHALL INSTALL CONDENSATE TRAPS AND INSTALL THE CONDENSATE DRAIN LINES OVER TO THE NEAREST CONDENSATE RISER, HUB DRAIN OR ROOF DRAIN. NO PREFORMED TRAPS SHALL BE ALLOWED. PROVIDE REMOVABLE CLEAN OUT TEES AT TOP AND BOTTOM OF TRAP. CONDENSATE DRAINS ON THE ROOF SHALL BE SUPPORTED USING SUPPORTS EQUAL TO MIFAB CE-8 SUPPORTS. CONDENSATE DRAINS SHALL BE SUPPORTED AT PROPER INTERVALS PER PVC MANUFACTURES REQUIREMENTS AND AT ALL ELBOWS TO PREVENT SAGGING. MINIMUM CONDENSATE DRAIN SIZE SHALL BE 3/4".
9. THE MECHANICAL CONTRACTOR SHALL INSTALL FIRE DAMPERS, SMOKE DAMPERS OR COMBINATION DAMPERS AT ALL FIRE RATED WALLS AND/OR SMOKE BARRIERS. REFER TO THE EXISTING ARCHITECTURAL LIFE SAFETY PLANS, IN THE OWNER'S POSSESSION, FOR THE WALL / CEILING RATINGS AND LOCATIONS.
10. ALL EXPOSED DUCTS SHALL BE PAINT GRIP DOUBLE WALL SPIRAL PAINTED PER THE ARCHITECTS DIRECTION IN THE FIELD. DUCT SHALL HAVE A MINIMUM OF ONE PRIMER COAT AND TWO FINISH COLOR COATS OF PAINT.
11. CONTRACTOR SHALL NOT FABRICATE OR CONSTRUCT DUCTWORK, PIPING, ETC. FROM THE DRAWINGS PRIOR TO VERIFYING DUCT, PIPING, ETC. CAN BE INSTALLED IN THE FIELD WITH RESPECT TO FIELD CONDITIONS.
12. COORDINATE WITH ROOFING CONTRACTOR FOR ALL ROOF PENETRATIONS. ON STANDING SEAM ROOFS AVOID PENETRATIONS ON STANDING SEAM.

MECHANICAL NOTATION LEGEND

DUCT SYSTEMS

EA	=	EXHAUST AIR
OA	=	OUTSIDE AIR
SA	=	SUPPLY AIR
RA	=	RETURN AIR

PIPING SYSTEMS

A	=	COMPRESSED AIR
CD	=	CONDENSATE DRAIN (PIPING)
G	=	GAS PIPING

DUCT DAMPERS & ACTUATORS

ASD	=	ADJUSTABLE SPLITTER DAMPER
AVD	=	ADJUSTABLE VOLUME DAMPER
AVE	=	ADJUSTABLE VOLUME EXTRACTOR
BD	=	BACKDRAFT DAMPER WITH WEIGHTED COUNTER BALANCE
DS	=	DUCT SMOKE DAMPER
FD	=	FIRE DAMPER WITH ACCESS DOOR
FD/SD	=	OUT OF WALL / FLOOR COMBINATION FIRE / SMOKE DAMPER WITH SMOKE DETECTOR,HEAT SENSOR AND ACCESS DOOR
M	=	MOTORIZED DAMPER
VD	=	VOLUME DAMPER

SENSORS (INSIDE SENSOR ICON)

C	=	CARBON DIOXIDE SENSOR
CO	=	CARBON MONOXIDE SENSOR
H	=	HUMIDITY SENSOR
NO	=	NITROGEN DIOXIDE SENSOR
P	=	PRESSURE SENSOR
S	=	TEMPERATURE SENSOR
SD	=	SMOKE DETECTOR
T	=	THERMOSTAT
T/H	=	THERMOSTAT / HUMIDISTAT

MECHANICAL SYMBOL LEGEND

= NEW WORK (DUCT, EQUIPMENT, PIPE, ETC.)
= EXISTING WORK TO REMAIN
= EXISTING WORK TO BE REMOVED
= MANUAL VOLUME DAMPER
= MOTORIZED DAMPER
= SENSOR ICON
= DEMOLITION KEY NOTE
= SUPPLY DROP / RISE
= RETURN DROP / RISE
= EXHAUST DROP / RISE
= PIPE DROP / RISE

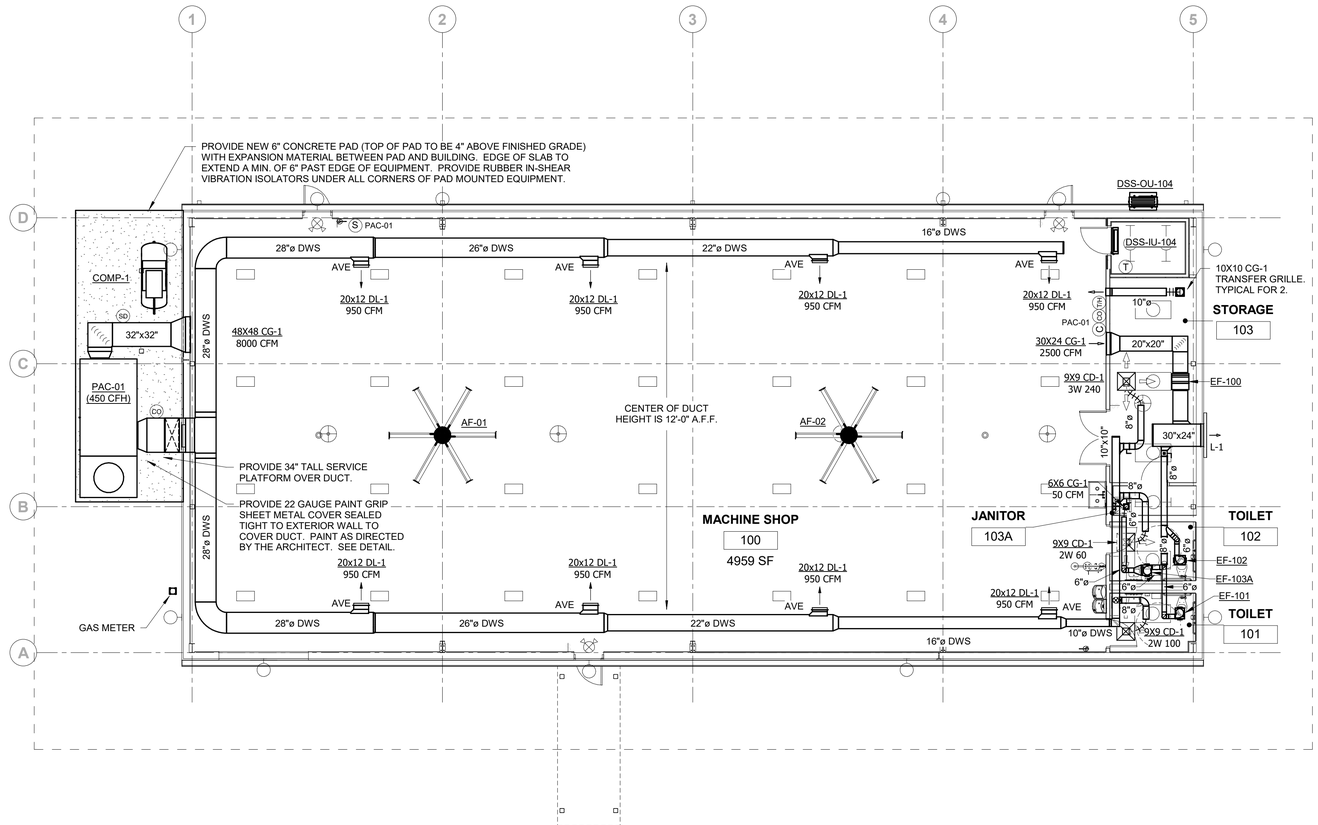

1st Floor Duct Systems

1/8" = 1'-0"

GRAPHIC SCALE: 1/8" = 1'-0"

0 2' 4' 6' 8' 12' 16' 24' 32'

mds
Mechanical Design Services, Inc.
305 Jefferson St. N, Suite D, Huntsville, AL 35801
(256) 534-5150 mds@mdseng.com

ALABAMA LICENSED PROFESSIONAL ENGINEER
07/26/2022
JOHNNY N. ECHOLS

NOLA VANPEURSEM ARCHITECTS, PC
MEMBER OF THE AMERICAN INSTITUTE OF ARCHITECTS
301 JEFFERSON STREET
HUNTSVILLE, ALABAMA 35801
(256) 533-6617
NVPARCHITECTS.COM

THIS DRAWING MAY NOT BE REPRODUCED IN WHOLE OR IN PART WITHOUT THE CONSENT OF NOLA|VANPEURSEM ARCHITECTS

MADISON COUNTY SCHOOLS
CAREER TECH CENTER MACHINE SHOP
1275 JORDAN ROAD
HUNTSVILLE, ALABAMA 35811

JOB NUMBER
22256

PBE / JJP | JNE | 07/26/2022
DRAWN - CHECKED - DATE

REVISIONS

No.	Description	Date

SHEET TITLE
MECHANICAL FLOOR PLAN

SHEET NUMBER
M101
OF

mds
Mechanical Design Services, Inc.
305 Jefferson St. N, Suite D, Huntsville, AL 35801
(256) 534-5150 mds@mdseng.com

GENERAL GAS NOTES

1. GAS METER TO BE INSTALLED FOR 450 CFH CONNECTED LOAD AT LESS THAN 0.4" W.G. DISCHARGE PRESSURE. COORDINATE WITH THE UTILITIES PROVIDER, GAS ENGINEERING / METER SHOP FOR INSTALLATION REQUIREMENTS. PAY ALL CHARGES AND AID TO CONSTRUCTION COSTS ASSOCIATED WITH GAS UTILITIES.
2. CONTRACTOR SHALL BE REQUIRED TO OFFSET THE GAS PIPE AS NECESSARY FOR THE INSTALLATION ON DIFFERENT ROOF LEVELS. THE OFFSETS SHALL BE SUPPORTED. WHERE THE OFFSET IS GREATER THAN 48", CONTRACTOR SHALL INSTALL WALL SUPPORTS. PIPE SUPPORTS SHALL NOT BE RIGIDLY CONNECTED TO THE PIPE AND PIPE SHALL BE A MINIMUM OF 4" ABOVE ROOF LINE, FINISHED FLOOR OR FINISHED GRADE.
3. ALL EQUIPMENT SHALL BE CONNECTED WITH A DIRT LEG EXTENSION.
4. ALL GAS PIPING SHALL BE SCHEDULE 40 BLACK STEEL PIPE AS SPECIFIED. EXTERIOR GAS PIPING SHALL BE PAINTED WITH A MINIMUM OF TWO COATS OF EXTERIOR YELLOW PAINT. PIPING AGAINST WALLS SHALL BE PAINTED TO MATCH WALL COLOR.

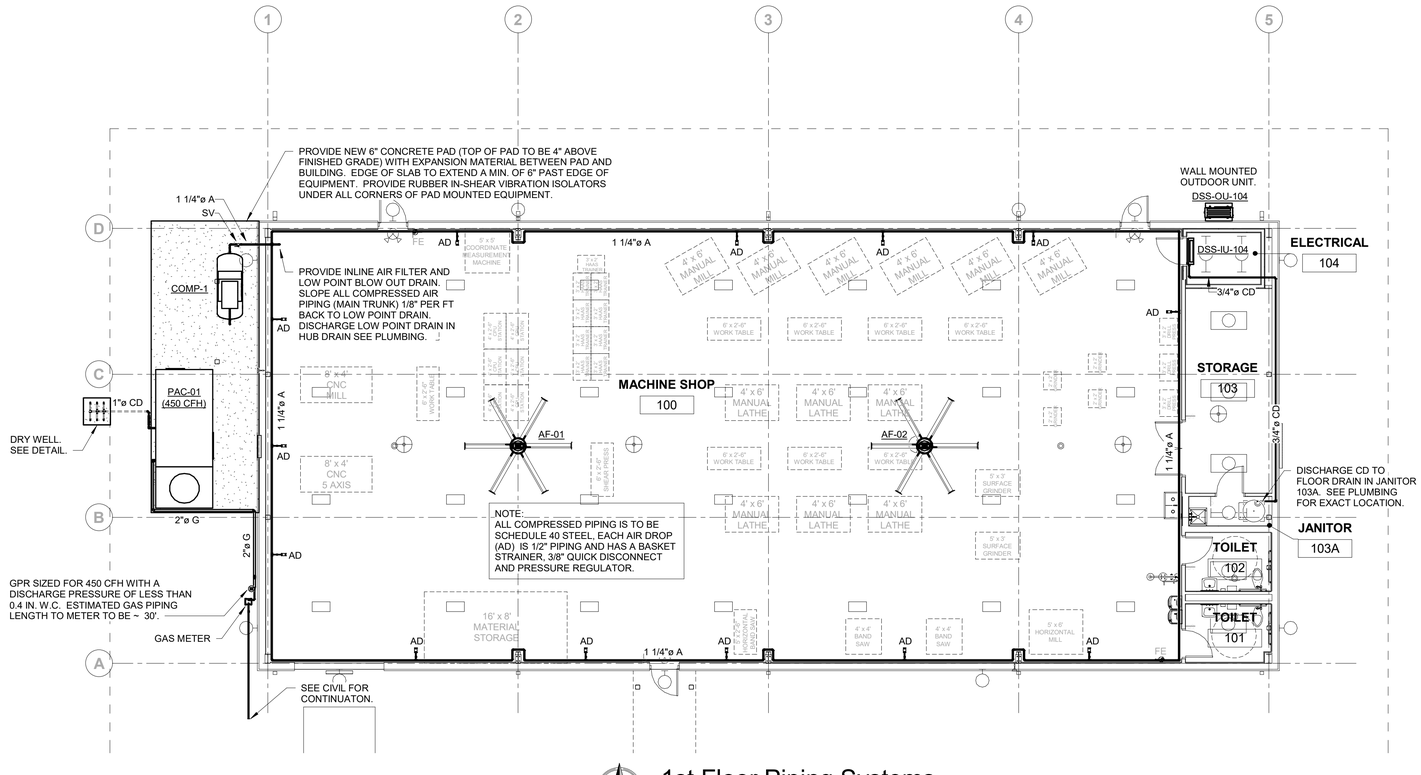

1st Floor Piping Systems

1/8" = 1'-0"

GRAPHIC SCALE: 1/8" = 1'-0"

0 2' 4' 6' 8' 12' 16' 24' 32'

ALABAMA LICENSED PROFESSIONAL ENGINEER JOHNNY N. ECHOLS
07/26/2022

NOLA VANPEURSEM ARCHITECTS, PC
MEMBER OF THE AMERICAN INSTITUTE OF ARCHITECTS
301 JEFFERSON STREET
HUNTSVILLE, ALABAMA 35801
(256) 533-6617
NVPARCHITECTS.COM

THIS DRAWING MAY NOT BE REPRODUCED IN WHOLE OR IN PART WITHOUT THE CONSENT OF NOLA|VANPEURSEM ARCHITECTS

MADISON COUNTY SCHOOLS
CAREER TECH CENTER
MACHINE SHOP
1275 JORDAN ROAD
HUNTSVILLE, ALABAMA 35811

JOB NUMBER
22256

PBE / JJP | JNE | 07/26/2022
DRAWN - CHECKED - DATE

REVISIONS

No.	Description	Date

SHEET TITLE
MECHANICAL FLOOR PLAN

SHEET NUMBER
M201
OF

mds
Mechanical Design Services, Inc.
305 Jefferson St. N, Suite D, Huntsville, AL 35801
(256) 534-5150 mds@mdseng.com

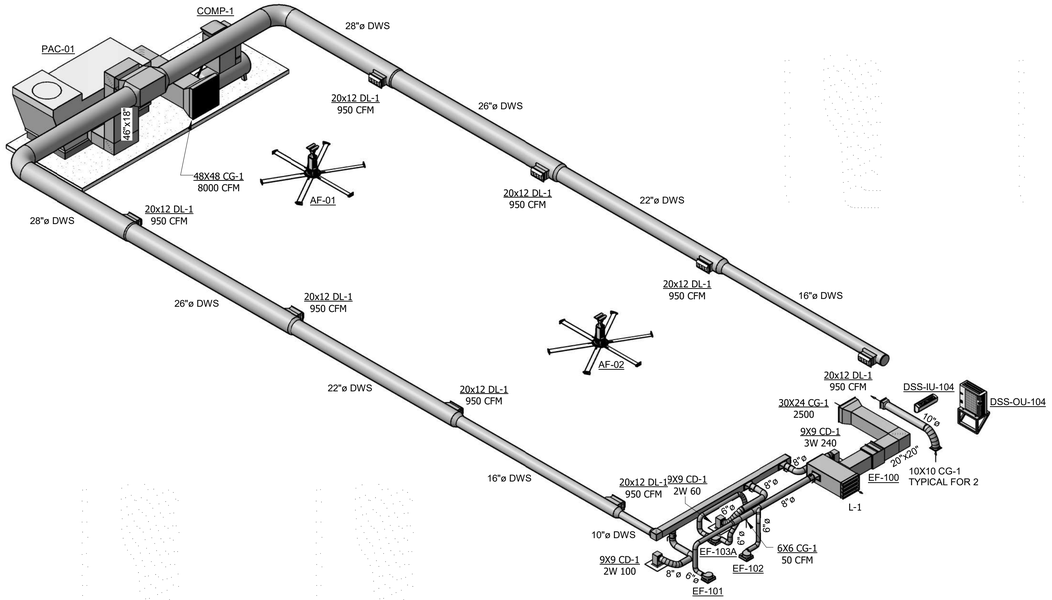

Isometric Ducted Systems

Not To Scale

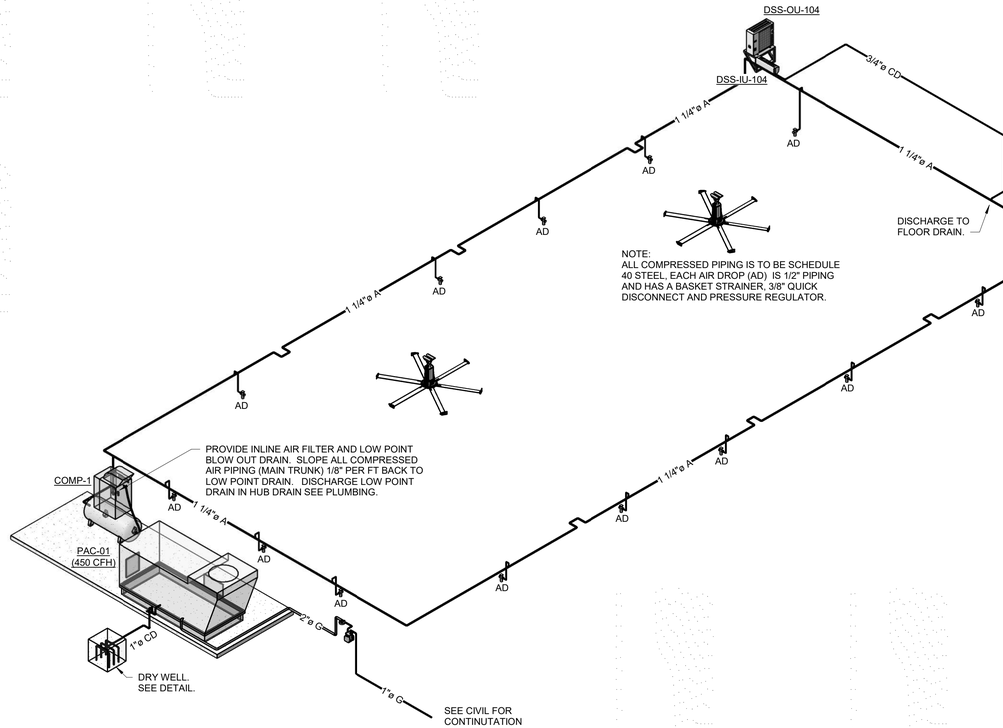

Isometric Piping Systems

Not To Scale

ALABAMA LICENSED PROFESSIONAL ENGINEER
07/26/2022
JOHNNY N. ECHOLS

NOLA VANPEURSEM ARCHITECTS, PC
MEMBER OF THE AMERICAN INSTITUTE OF ARCHITECTS
301 JEFFERSON STREET
HUNTSVILLE, ALABAMA 35801
(256) 533-6617
NVPARCHITECTS.COM

THIS DRAWING MAY NOT BE REPRODUCED IN WHOLE OR IN PART WITHOUT THE CONSENT OF NOLA/VANPEURSEM ARCHITECTS

MADISON COUNTY SCHOOLS

CAREER TECH CENTER
MACHINE SHOP

1275 JORDAN ROAD
HUNTSVILLE, ALABAMA 35811

JOB NUMBER
22256

PBE / JJP	JNE	07/26/2022
DRAWN -	CHECKED -	DATE

REVISIONS

No.	Description	Date

SHEET TITLE
MECHANICAL ISOMETRICS

SHEET NUMBER
M301
OF

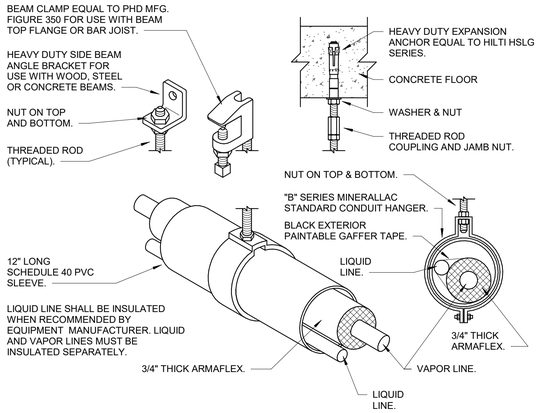

REFRIGERANT

PIPE HANGER DETAIL

NOT TO SCALE

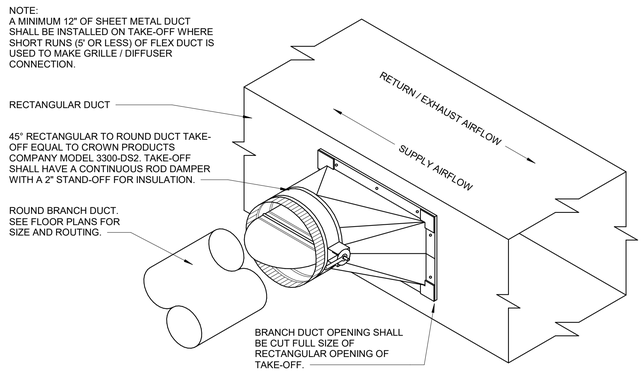

RECTANGULAR TO ROUND 45°

DUCT TAKE-OFF DETAIL

NOT TO SCALE

mds
Mechanical Design Services, Inc.
305 Jefferson St. N, Suite D, Huntsville, AL 35801
(256) 534-5150
mds@mdseng.com

GPR SHALL BE INSTALLED 10' FROM ANY OUTSIDE AIR INTAKE OR OPERABLE WINDOW. IF 10' SEPARATION IS NOT ACHIEVABLE THEN COPPER TUBING SHALL BE ROUTED FROM GPR RELIEF PORT TO A LOCATION THAT MEETS THESE REQUIREMENTS. INSTALL STAINLESS STEEL SCREEN MESH OVER OPEN END OF COPPER TUBING. COPPER TUBING SHALL BE SIZED PER MANUFACTURER'S REQUIREMENTS TAKING INTO ACCOUNT THE REQUIRED LENGTH OF PIPING. IN NO CASE SHALL THE PIPE SIZE BE SMALLER THAN THE VENT CONNECTION SIZE ON THE REGULATOR.

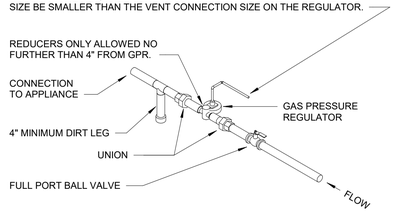

GAS PRESSURE REGULATOR

GAS PIPING DETAIL

NOT TO SCALE

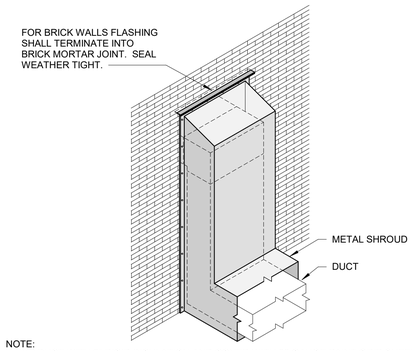

NOTE:
WRAP DUCT WITH 2" RIGID INSULATION AND COVER WITH 22 GAUGE PAINT GRIP SHEET METAL DUCT COVER. COVER TO BE SLOPED ON ALL HORIZONTAL SURFACES AND OPEN 6" ABOVE GRADE AND EXTEND TO UNIT. PAINT TO MATCH GUTTER WITH A MINIMUM OF TWO COATS OF EXTERIOR GRADE UV RESISTANT PAINT. SEAL ALL PENETRATIONS IN EXTERIOR WALL WEATHER TIGHT. COVER SHALL BE SLOPED ON TOP TO PREVENT WATER FROM POOLING. TOP OF COVER SHALL EXTEND FROM THE UNDERSIDE OF THE ROOF DECKING / GUTTER TO GRADE. SEAL & FLASH ALL PENETRATION IN METAL COVER AND EXTERIOR WALL WEATHER TIGHT.

EXTERIOR DUCT

METAL COVER DETAIL

NOT TO SCALE

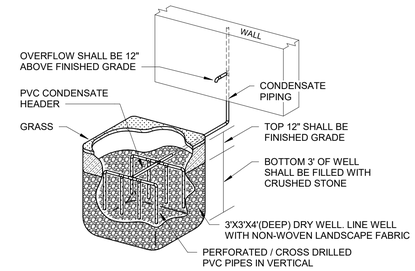

CONDENSATE

DRY WELL DETAIL

NOT TO SCALE

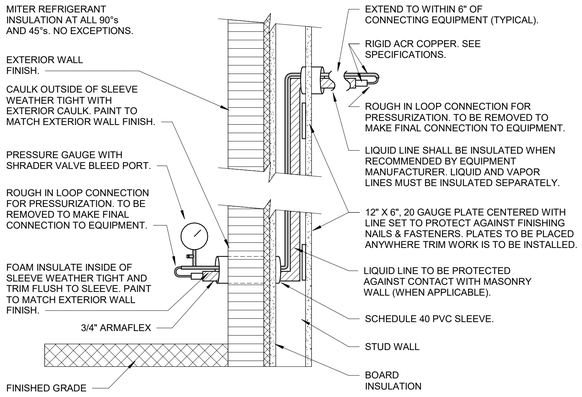

NOTE:
LINE SET TO BE RUN WITHIN 6" OF EACH PIECE OF CONNECTING EQUIPMENT AND CHARGED WITH NITROGEN TO A STATIC PRESSURE OF 150 PSI THROUGHOUT DURATION OF CONSTRUCTION. 36 HOURS PRIOR TO THE FINAL CONNECTION TO THE EQUIPMENT, THE LINE SET WILL BE EVACUATED AND RE-CHARGED TO 150 PSI WITH NITROGEN AND GRAPHED FOR 24 HOURS. THE LINE SET INCLUDES ALL REFRIGERANT PIPING, VAPOR LINE, LIQUID LINE, HOT GAS, ETC.

STUD WALL

LINE SET ROUGH IN DETAIL

NOT TO SCALE

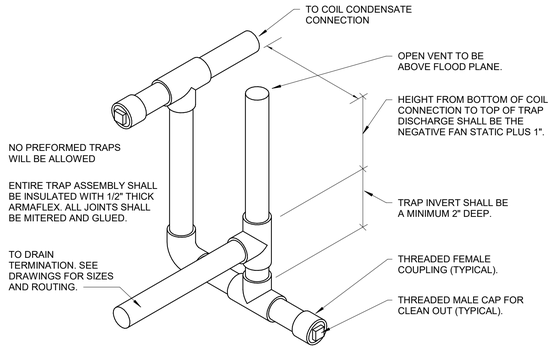

CONDENSATE DRAIN TRAP DETAIL

NOT TO SCALE

NOTE:
FOIL TAPE ALL INSULATION SEAMS TO PROVIDE A VAPOR BARRIER. AIR TERMINAL SHALL BE FASTENED TO STRUCTURE ABOVE WITH METAL CABLING AND FASTENERS VIA EARTHQUAKE TABS ON AIR TERMINAL.

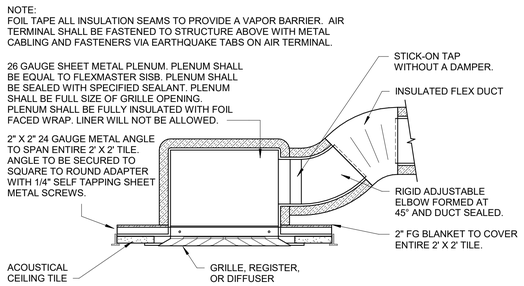

2X2 A.C.T. SURFACE MOUNTED

GRILLE / REGISTER / DIFFUSER DETAIL

NOT TO SCALE

NOTE:
FOIL TAPE ALL INSULATION SEAMS TO PROVIDE A VAPOR BARRIER. AIR TERMINAL SHALL BE FASTENED TO STRUCTURE ABOVE WITH METAL CABLING AND FASTENERS VIA EARTHQUAKE TABS ON AIR TERMINAL.

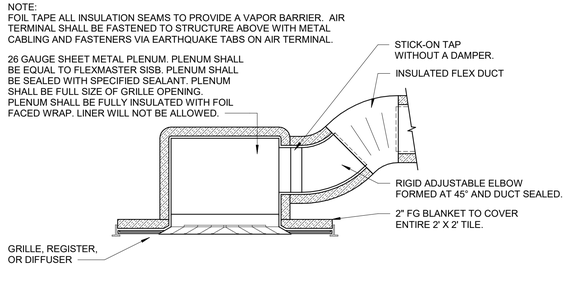

ACOUSTICAL CEILING LAY-IN

GRILLE / REGISTER / DIFFUSER DETAIL

NOT TO SCALE

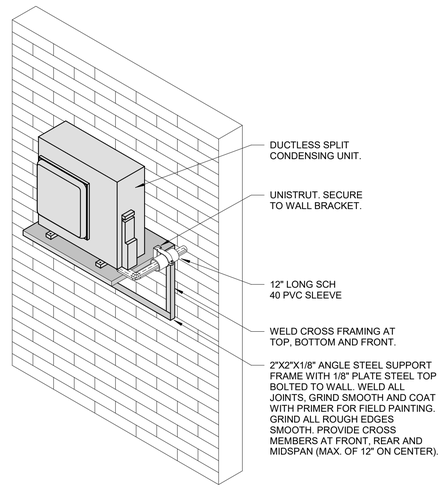

WALL MOUNTED BRACKET DETAIL

DUCTLESS SPLIT CONDENSING UNIT DETAIL

NOT TO SCALE

ALABAMA LICENSED PROFESSIONAL ENGINEER
JOHNNY N. ECHOLS
07/26/2022

NOLA VANPEURSEM ARCHITECTS, PC
MEMBER OF THE AMERICAN INSTITUTE OF ARCHITECTS
301 JEFFERSON STREET
HUNTSVILLE, ALABAMA 35801
(256) 533-6617
NVPARCHITECTS.COM

THIS DRAWING MAY NOT BE REPRODUCED IN WHOLE OR IN PART WITHOUT THE CONSENT OF NOLA|VANPEURSEM ARCHITECTS

MADISON COUNTY SCHOOLS

CAREER TECH CENTER
MACHINE SHOP

1275 JORDAN ROAD
HUNTSVILLE, ALABAMA 35811

JOB NUMBER
22256

PBE / JJP	JNE	07/26/2022
DRAWN	CHECKED	DATE

REVISIONS

No.	Description	Date

SHEET TITLE
MECHANICAL DETAILS

SHEET NUMBER
M401
OF

mds
Mechanical Design Services, Inc.
305 Jefferson St. N, Suite D, Huntsville, AL 35801
(256) 534-5150 mds@mdseng.com

SEQUENCE OF CONTROL

Provide all necessary equipment, materials, labor, devices, etc. to satisfy the intent of this Sequence of Control.

Utilizing the unit's factory unit controller boards to satisfy this Sequence of Control and Monitor Points List is not allowed. The factory unit controller shall only control the inner workings of the unit however independent BAS unit controllers and sensors to be provided and installed to ensure the full intent of the Sequence of Control and Monitor Points List is met.

The Controls Contractor SHALL NOT use the equipment's transformer to power ANY controls devices, panels, actuators, etc. The Controls Contractor shall ensure that the Electrical Contractor provides sufficient sources of power for all control devices, VAV boxes, damper and valve actuators, etc. The Controls Contractor shall provide all transformers and coordinate with the Electrical Contractor for the installation of the transformers.

All controls wiring shall be in EMT conduit with MC flex whips (interior) Sealtight (exterior) no longer than 60" to all devices, equipment, etc. The Controls Contractor shall furnish and install all wall boxes and EMT conduit, with pull string, for all controls wiring including drops to thermostats, sensors and other wall mounted devices. All wiring, whether HVAC, Communications, Power, Controls, must be in conduit. Low Voltage devices can reside in wiring gutter but conduit is required to the wiring gutter. No open air wiring allowed unless in the wiring gutter.

All control wiring shall be plenum rated shielded cable and shall have a unique color or marking(s) from all other cabling on the project.

Fully modulating dampers shall be controlled with Belimo model NF24-SR-S-US, direct coupled, 24 volt, 60 in-lb. torque, spring return and built in auxiliary switch. Two-position dampers shall be controlled with Belimo model NF24-S-US, direct coupled, 24 volt, 60 in-lb. torque with 75 second run time, spring return and built in auxiliary switch.

Smoke detectors shall be installed by the Mechanical Contractor and shall be wired by the Fire Alarm Contractor. Contractors must review the Contract Documents and coordinate, prior to bid, to clarify which Contractor is responsible for providing smoke detectors.

Heating set points shall be 71°F during Occupied periods and 65°F during Unoccupied periods with a +/- 3°F adjustment. Cooling set points shall be 72°F during Occupied periods and 80°F during Unoccupied periods with a +/- 3°F adjustment. All set points shall be adjustable. Sensors are not to have a temperature or humidity display. Corridor sensors are to be stainless steel 2"x4" blank plate type.

Dehumidification shall be disabled whenever there is a call for cooling or heating. Dehumidification shall only be active when the space temperature is satisfied and the RH% exceeds the set point.

Any HVAC equipment with an airflow of 2,000 CFM or greater shall be equipped with a return duct mounted smoke detector(s). The duct smoke detector must shut the system down within 10 seconds upon activation. Provide all necessary Life Safety rated devices and coordinate with the equipment manufacturer to ensure the system shuts down (no airflow) after 10 seconds of duct smoke detector activation. All duct smoke detector shutdowns shall be tested from filling the duct with and IAQ approved smoke generation device from the duct access door to be provided and installed at the detector's sample tubes.

PAC-01

Occupied mode

The unit shall be enabled during occupied periods as determined by the Honeywell 8000 Touch Pro Wi-Fi thermostat. During occupied periods, the unit fan shall be enabled, the outside air damper shall open to its set point position, EF-100 shall be enabled and the system shall change modes as required to satisfy space temperature set points whenever there is a need for heating or cooling. The system shall maintain the zone temperature set point (adjustable; 73°F cooling & 55% RH / 71°F heating). The outside air damper shall be fully closed when the fan is disabled. The occupancy contacts in the Honeywell 8000 Touch Pro thermostat shall be used as a pilot relay to enable a power duty relay to enable and disable return and outside air dampers and EF-100 motor starter (motor starter to be provided by this Contractor). Provide a separate relative humidity sensor as required.

Space CO2 Control

During occupied periods, the outside air damper shall modulate open from its minimum set point position to its maximum position in direct proportion to an increase of CO_2 ppm registered by the CO_2 sensor. The outside air actuator shall modulate closed from its maximum set point position to its minimum position in direct proportion to a decrease of CO_2 ppm registered by the CO_2 sensor. The minimum outside air grille CFM shall be 20% of the maximum CFM rate or as shown on the Drawings. The minimum CO_2 set point shall be 800 ppm, the maximum CO_2 set point shall be 1000 ppm. The outside air damper shall be fully closed when the unit is disabled or if the space is in an unoccupied time periods and the exhaust fans are disabled.

Unoccupied mode

The thermostat shall also enable the unit during unoccupied periods in the setback mode. The unit shall be enabled in the cooling mode whenever the space temperature exceeds 80°F or 55% RH to maintain the space temperature and humidity set point. The unit shall be enabled in the heating mode whenever the space temperature falls below 65°F to maintain the space temperature set point. When the unit is enabled in the night/setback mode, the fan shall be enabled when the unit is either heating or cooling and the outside air damper shall be fully closed at all times in unoccupied mode. Whenever the unit is disabled, the outside air damper shall be fully closed. EF-100 shall be disabled during unoccupied periods.

Economizer Control

The RTU shall go into economizer mode whenever the outdoor temperature is 55°F or below. A mixed air temperature sensor shall be installed and shall modulate the return and outside air dampers to maintain a mixed air temperature of 55°F. The economizer hood shall be equipped with a powered barometric relief damper from the equipment manufacturer.

Provide a Honeywell E3 Carbon Monoxide (CO) Detector located as shown on the Drawings. Provide a CO sensor 48" AFF. Integrate detector into the fire alarm panel (if available) to provide a supervisory trouble signal to the fire alarm panel to alarm the Owner whenever the levels in the 1st room supplied by the duct system exceeds 25 ppm. The detector shall disable associated fuel fired systems in the area. If there is not a fire alarm, utilize the Honeywell E3 Point alarm to alarm the occupants of CO levels above 25 ppm. The detector shall be tested in accordance to NFPA 720. Contractor to complete "Carbon Monoxide System Inspection And Testing Form" provided in NFPA 720 and turn over to the State of Alabama Building Inspector at Final Inspection.

For systems 2,000 CFM or greater, the unit shall be disabled whenever the duct mounted smoke detector senses products of combustion. Integrate the smoke detector to the fire alarm panel as a supervisory. If there is not a fire alarm, provide a local horn and strobe detector in the shop to alarm the occupants.

The unit shall be disabled whenever the condensate overflow sensor is activated.

DSS-104

The DSS unit shall be controlled by the equipment manufacturer's wall mounted7 day programmable thermostat. Integrate the condensate pump's overflow switch to disable the unit if the condensate switch trips.

EF-101 and 102

Fan shall be enabled by the room's lighting circuit's occupancy sensor's auxiliary contacts.

EF-103A

Fan shall be enabled continuously.

EF-100

Fan shall be enabled during occupied periods. Provide a 7 day, 4 event per day, Time Clock.

AIRFOIL FAN SCHEDULE

Mark	Basis of Design	Model	Mounting Blade Height, Ft.	Diameter, ft	# of Airfoils	Weight, lbs	Motor, HP	RPM	Control	FLA / MOCP	Volt / Phase	Notes
AF-01	SKYBLADE	FNTM-1236	13	12	6	250	1.35	92	Onboard VFD	9 / 15	120 / 1	1 - 4
AF-02	SKYBLADE	FNTM-1236	13	12	6	250	1.35	92	Onboard VFD	9 / 15	120 / 1	1 - 4

Notes:
1. Verify extension tube length and mounting bracket with manufacturer prior to ordering.
2. Fan to be tied into fire alarm panel.
3. Provided double Yoke Controller.
4. Mounting blade heights determined during design may require adjusting based on feild conditions during construction.
5. Factory warranty equal to 7 years Mechanical, 3 years Electrical, 1 year Labor.

LOUVER SCHEDULE

Mark	Function	Size	CFM	Free Area, S.F.	Pressure Drop, w.g.	Construction	Frame Type	Finish	Basis of Design	Model	Options	Notes
L-01	Intake	30" X 24" X 6"	2690	1.89	0.17	0.125" Extruded Aluminum	Flanged	Kynar	Ruskin	ELF6375DXH	1, 2, 3	A

Options:
1. Provide removable stainless steel bird screen.
2. Provide Kynar finish. Submit color chart for Architect to select color.
3. Provide extended sill and drip cap. Coordinate with GC for flashing around louver when installed in metal siding wall.

Notes:
A. Ruskin has been specified to establish the type and quality of louver to be installed. Greenheck equal will be allowed. All other louvers must be submitted 10 days prior to bid for consideration.

GRILLE, REGISTER AND DIFFUSER SCHEDULE

Mark	CD-1	CD-2	CG-1	DL-1
Description	Square Louvered Face Ceiling Diffuser, Square Neck, Adjustable Discharge Pattern	Square Louvered Face Ceiling Diffuser, Square Neck, Adjustable Discharge Pattern	Square Louvered Face Ceiling Grille, Square Neck, 35° Deflection	Drum Louver, High Capacity, Long Throw
Mounting	Lay-In	Surface	Surface	Duct Surface
Material	Aluminum	Aluminum	Aluminum	Aluminum
Finish	Match Ceiling Color	Match Ceiling Color	Match Ceiling / Wall Color	Match Duct Color
Titus Model	TDC-AA	TDC-AA	350FL	DL
Border Type	Type 3	Type 6	Type 1	Type 1
Accessories	-	-	-	AG-45 Volume Extractor with Operator #3

Notes:
1. Titus has been specified to establish the type and quality of air device to be installed. Prior Approved equals will be considered. Prior Approval request must be submitted 10 days prior to bid.
2. Maximum NC Rating shall not exceed 30.
3. Air devices that are ceiling cut-in type shall be centered in the tile.
4. Ceiling mounted louvered return / exhaust grilles shall be installed with the blades pointed toward the closest wall so that the blades form a view block.
5. Wall mounted return / exhaust grilles shall be installed with the blades pointing toward the floor or ceiling, whichever is nearest, so that the blades form a view block.
6. Internal portion of duct, including inlet plenum box, attached to supply, return, exhaust and transfer grilles shall be blacked out with a dull finish, non-toxic, DTM paint.
7. Grille termination shall be Flexmaster SIDB or prior approved equal unless otherwise specified in schedule above or noted on drawings. See detail for duct to grille, register, diffuser connection.

AIR COMPRESSOR SCHEDULE

System	
Mark	COMP-1
CFM	55.8
Tank Size, Gallon	120
Electrical	
Voltage / Phase	480 / 3
HP	15
MCA	8.9
MOCP	20.36
Breaker size	40
Basis of Design, Manufacturer	FS Curtis
Model	CV-8912UP
Weight, lbs.	1075
Options	1, 2, 3
Notes	A, B

Options:
1) Provide service disconnect.
2) Provide NEMA 4 Starter, Low Oil Switch, Auto Drain, and Vibration Pads.
3) Provide inline filter on the discharge side of the air compressor.

Notes:
A) Provide 5 yr. warranty
B) Auto drain is 120v with a MOCP of 1 amp.
C) Provide 2 yr. parts and labor warranty, with an additional 3 yrs...

FAN SCHEDULE

Mark	EF-100	EF-101	EF-102	EF-103A
Drive	Direct	Direct	Direct	Direct
CFM	2500	75	75	50
Watts	-	27	27	22
Motor HP	3/4	-	-	-
RPM	1321	712	712	566
Static Pressure, In WC	0.125	0.125	0.125	0.125
Sones	15	0.6	0.6	0.3
Volt/Phase	208/1	120/1	120/1	120/1
Basis of Design				
Manufacturer	Cook	Cook	Cook	Cook
Model	150SQN17D (VF2	GC-146	GC-146	GN-128
Weight, lbs	30	30	30	30
Options Set:	1	1	1	2
Notes:	B	A	A	B
Option Sets				
1 Cabinet Fan				
- Provide service disconnect switch.				
- Provide Backdraft Damper.				
- Provide speed control mounted on fan.				
- Provide spring vibration isolator kit.				
- Provide deluxe aluminum grille. Color to be selected by the Architect during the submittal phase. White shall be the default grille color.				
2 Inline Cabinet Fan				
- Provide service disconnect switch.				
- Provide Backdraft Damper.				
- Provide speed control mounted on fan.				
- Provide spring vibration isolator kit.				
Notes:				
A. Fan shall be controlled by associated room's light switch.				
B. Fan shall be enabled to run continuously during occupied periods.				

GAS HEAT PACKAGED A/C UNIT SCHEDULE

Mark	PAC-01
Outside Air	
Minimum	1,200
Maximum	2,690
EER (@ ARI)	10.0
IEER (@ ARI)	16.7
Supply Fan	
CFM	8,000
ESP	0.50
Cooling	
Nominal Tonnage	25
Total Capacity, MBH	299.00
Sensible Capacity, MBH	211.90
EAT DB/WB, °F	78.7 / 66.2
LAT DB/WB, °F	53.9 / 53.9
Hot Gas Reheat	
Total Capacity, MBH	137.30
EAT DB, °F	53.90
LAT DB, °F	70.00
Heating	
Fuel	Natural Gas
Input, MBH	450
Output, MBH	360
Efficiency	80.0%
EAT / LAT, °F	54.7 / 97.2
Electrical	
Volt / Phase	480 / 3
MCA	74.3
MOCP	90.0
Basis of Design	
Manufacturer	Daikin
Model	DPS025A
Weight, lbs.	4,043
Options	All Options

Options:
1. Provide motorized outside and return air damper mixing box (outside air dampers shall be opposed blade, low leak dampers), low ambient kit and thermostatic expansion valves. Provide factory non-fused disconnect switch and powered GFCI convenience outlet. Powered GFCI convenience outlet to be fused from the factory.
2. Provide Low Ambient Kit, Variable Condenser Speed Control, Ball Bearing Condenser Motor & Capacitor / Relay.
3. Provide staged gas heat with stainless steel heat exchanger.
4. Provide modulating hot gas reheat.
5. Provide dry bulb economizer with powered exhaust relief with building differential pressure control.
6. Provide ECM / VFD with shaft grounding ring(s).
7. Provide louvered hail guards.
8. Provide 5 year parts, labor & refrigerant warranty.
9. Provide variable speed condenser fan head pressure control with ball bearing condenser fan motors.
10. Provider variable speed Inverter...

Notes:
A. See Sequence of Control
B. Equipment shall be provided by OEM sales office.
C. Install return duct smoke detector with access door upstream of the detect...
D. Provide Carbon Monoxide detector equal to Honeywell E3 Point shall comply with NFPA 72 and alarm at 25 ppm of CO. The detector shall be powered by primary power. Provide battery back up power as well. The detector shall be integrated into the building's Fire Alarm system and provide a trouble / supervisory alarm to the Fire Alarm panel. The detector shall shut down the unit upon activation. Coordinate with the Fire Alarm Contractor prior to bid and during construction prior to submittals for proper integration in to the building's fire alarm. If the building does not have a building fire alarm then the signal shall activate a audio / visual alarm located in a regularly occupied area.

DUCTLESS SPLIT COOLING ONLY SYSTEM SCHEDULE

System	
SEER	18.5
Total Capacity Range, MBH	5.5 - 20.0
Sensible Capacity , MBH	14.5
Electrical	
Voltage / Phase	208 / 1
MCA	13.4
MOCP	20
Indoor Unit	
Mark	**DSS-IU-104**
CFM Range	395 - 715
Outside Air	Daikin
Basis of Design, Manufacturer	FTK18AXVJU
Model	31
Outdoor Unit	
Mark	**DSS-OU-104**
Basis of Design, Manufacturer	Daikin
Model	RK36NMVJUA
Weight, lbs	133
Options	1, 2
Notes	A, B, C

Options:
1. Provide low ambient controls, condensate pump and trim kit.
2. Provide Metric to English gauge fittings. No exception.

Notes:
A) Indoor Unit receives power from Outdoor Unit.
B) Line set and condensate piping shall be located within the wall. Exposed piping will not be allowed.
C) Little Giant condensate pump VCMX-20ULS-C with anti-sweat sleeve, safety switch and wall mounting brackets.

ALABAMA LICENSED PROFESSIONAL ENGINEER
07/26/2022
JOHNNY N. ECHOLS

NOLA VANPEURSEM ARCHITECTS, PC
MEMBER OF THE AMERICAN INSTITUTE OF ARCHITECTS
301 JEFFERSON STREET
HUNTSVILLE, ALABAMA 35801
(256) 533-6617
NVPARCHITECTS.COM

THIS DRAWING MAY NOT BE REPRODUCED IN WHOLE OR IN PART WITHOUT THE CONSENT OF NOLA|VANPEURSEM ARCHITECTS

MADISON COUNTY SCHOOLS

CAREER TECH CENTER
MACHINE SHOP

1275 JORDAN ROAD
HUNTSVILLE, ALABAMA 35811

JOB NUMBER
22256

PBE / JJP	JNE	07/26/2022
DRAWN - CHECKED	-	DATE

REVISIONS

No.	Description	Date

SHEET TITLE
MECHANICAL SCHEDULES

SHEET NUMBER
M501
OF

RECEPTACLES

- WALL OUTLET: DUPLEX RECEPTACLE, NEMA 5–20R.
- WALL OUTLET: DUPLEX RECEPTACLE, NEMA 5–20R, MOUNT 44" AFF UNLESS OTHERWISE NOTED OR EQUAL.
- EWC — WALL OUTLET: ELECTRIC WATER COOLER RECEPTACLE, GFI TYPE, 20A, 125V, 2P, 3W, NEMA 5–20R. VERIFY EXACT HEIGHT AND LOCATION PRIOR TO INSTALLATION.
- GFI — WALL OUTLET: GROUND FAULT INTERRUPTER RECEPTACLE, TERMINAL NEMA 5–15R. MOUNT AT 18" A.F.F. OR AS NOTED.
- WP — WALL OUTLET: DUPLEX RECEPTACLE, WEATHERPROOF, NEMA 5–20R.
- WALL OUTLET: DOUBLE–DUPLEX, NEMA 5–20R., MOUNT 44" AFF.
- WALL OUTLET: DOUBLE–DUPLEX, NEMA 5–20R., MOUNT 18" AFF.
- SUSPENDED OUTLET: DUPLEX RECEPTACLE, SEE DETAILS
- SUSPENDED OUTLET: QUAD RECEPTACLE, SEE DETAILS

FIRE ALARM

- F — FIRE ALARM SYSTEM: MANUAL STATION, MOUNT 4'–0"H.
- FA — FIRE ALARM SYSTEM: ANNUNCIATOR
- FIRE ALARM SYSTEM: SMOKE DETECTOR, SURFACE MOUNTED.
- T — FIRE ALARM SYSTEM: AUTOMATIC FIRE DETECTOR, HIGH TEMPERATURE, 190 DEG. F.(THERMAL) (THERMAL AND RATE OF RISE).
- FIRE ALARM SYSTEM: SMOKE DETECTOR IN A/C DUCT WITH SAMPLING TUBES.
- F — FIRE ALARM SYSTEM: COMBINATION SPEAKER AND STROBE, WALL MOUNTED
- FACP — FIRE ALARM SYSTEM: CONTROL PANEL, (SURFACE) (FLUSH) MOUNTED.

POWER

- CEILING EXHAUST FAN.
- NON–FUSED DISCONNECT SWITCH.
- FUSED DISCONNECT SWITCH.
- CIRCUIT BREAKER.
- ATS — AUTOMATIC TRANSFER SWITCH.
- ELECTRICAL PANEL: SEE SCHEDULE AND SPECIFICATIONS.
- T — TRANSFORMER
- FUSED DISCONNECT SWITCH WITH CONNECTION TO EQUIPMENT.
- $_T — MANUAL MOTOR STARTER THERMAL SWITCH. WALL MOUNT 5'–6"H. OR AT MOTOR AS SHOWN.

JUNCTION & OUTLET BOXES

- J — CEILING OUTLET: JUNCTION BOX.
- WALL OUTLET: JUNCTION BOX WITH FLEXIBLE CONNECTION.
- J — WALL OUTLET: JUNCTION BOX.

LIGHTING (SEE LIGHT FIXTURE SCHEDULE)

- A / 1 — CEILING OUTLET: RECESSED LED LIGHT FIXTURE. LUMINAIRE TYPE "A", CIRCUIT #1
- A / E — CEILING OUTLET: RECESSED EMERGENCY LED LIGHT FIXTURE. LUMINAIRE TYPE "A", CIRCUIT #1
- CEILING OUTLET: SURFACE MOUNTED LED LIGHT FIXTURE.
- CEILING OUTLET: SURFACE MOUNTED EMERGENCY LED LIGHT FIXTURE.
- WALL OUTLET: WALL MOUNTED EMERGENCY LED LIGHT FIXTURE.
- WALL OUTLET: WALL MOUNTED LED LIGHT FIXTURE.

LIGHTING CONTROLS

- $_O — WALL SWITCH: OCCUPANCY SENSOR & MANUAL ON/OFF. WATTSTOPPER DW–100 OR EQUAL.
- $_OVR — SWITCH: LOCAL ON/OFF DIMMING CONTROL OVERRIDE SWITCH FOR LOCAL OCCUPANCY SENSOR.
- CEILING OCCUPANCY SENSOR: DUAL TECHNOLOGY
- P — LIGHTING POWER PACK: FOR USE WITH OCCUPANCY SENSORS & LIGHTING CONTROL. PROVIDE AS REQUIRED

TELE/DATA

- WALL OUTLET: 4 SQUARE BOX WITH COVER. 2 EACH CAT 6A CABLES ROUTED BACK TO ELECTRICAL ROOM AND TERMINATED AT EACH END. 10' SLACK AT EACH END.
- WAP — CEILING OUTLET: 4 SQUARE BOX WITH COVER. 1 EACH CAT 6A CABLES ROUTED BACK TO ELECTRICAL ROOM AND TERMINATED AT EACH END. 10' SLACK AT EACH END.
- CAM — CEILING OUTLET: 4 SQUARE BOX WITH COVER. 1 EACH CAT 6A CABLES ROUTED BACK TO ELECTRICAL ROOM AND TERMINATED AT EACH END. 10' SLACK AT EACH END. CAMERA BY OWNER.

ABBREVIATIONS

A	ABOVE COUNTER	IG	ISOLATED GROUND
AFG	ABOVE FINISH GRADE	NL	NIGHT LIGHT
AFF	ABOVE FINISH FLOOR	MCB	MAIN CIRCUIT BREAKER
AIC	AVAILABLE INTERRUPT CURRENT	MLO	MAIN LUGS ONLY
AL	ALUMINUM	RR	REMOVE AND REPLACE WITH NEW
AWG	AMERICAN WIRE GAUGE	TBB	TELEPHONE BACK BOARD
C	CONDUIT RACEWAY	TP	TAMPER PROOF
CB	CIRCUIT BREAKER	TV	TELEVISION
CU	COPPER	TYP	TYPICAL
DISC	DISCONNECT	UC	UNDER COUNTER
EM	EMERGENCY	UG	UNDER GROUND
EMT	ELECTRICAL METALLIC TUBING	WAP	WIRELESS ACCESS POINT
EP	EXPLOSION PROOF	WP	WEATHERPROOF, NEMA 3R.
EX	EXISTING	XR	EXISTING – REMOVE
F	FUSE	XRR	EXISTING – REMOVE AND RELOCATE
G, GRD	GROUND	XRL	EXISTING – RELOCATED
GFI	GROUND FAULT INTERRUPTING		

BRANCH CIRCUITS

- BRANCH CIRCUIT: CONCEALED IN CEILING OR WALL.
- BRANCH CIRCUIT: CONCEALED IN CEILING OR WALL. 3#12, 1#12G–3/4"C
- BRANCH CIRCUIT: HOMERUN TO PANELBOARD AND 20A., 1P., BREAKER, UNLESS OTHERWISE NOTED. SHOWN, 2#12, 1#12G–3/4"C THE NUMBER IN THE CIRCUIT INDICATES A.W.G. WIRE SIZE WHEN DIFFERENT THAN #12 AWG. SEE NOTE 19.
- BRANCH CIRCUIT: HOMERUN TO PANELBOARD AND 20A., 1P., BREAKER, UNLESS OTHERWISE NOTED. SHOWN, 2#12, 2#12(N), 1#12(G)–3/4"C. THE NUMBER IN THE CIRCUIT INDICATES A.W.G. WIRE SIZE WHEN DIFFERENT THAN #12 AWG. SEE NOTE 19.
- BRANCH CIRCUIT: HOMERUN TO PANELBOARD AND 20A., 1P., BREAKER, UNLESS OTHERWISE NOTED. SHOWN, 3#12, 3#12(N), 1#12(G)–3/4"C. THE NUMBER IN THE CIRCUIT INDICATES A.W.G. WIRE SIZE WHEN DIFFERENT THAN #12 AWG. SEE NOTE 19.
- BRANCH CIRCUIT: CONCEALED IN OR BELOW FLOOR OR UNDERGROUND
- RISER: DOWN
- RISER: UP

NOTES

1. ALL ELECTRICAL WORK SHALL BE DONE IN ACCORDANCE WITH THE NATIONAL ELECTRICAL CODE AND LOCAL ORDINANCES. CONTRACTOR SHALL OBTAIN AND PAY FOR ALL NECESSARY PERMITS.
2. CONTRACTOR SHALL VISIT THE SITE AND FAMILIARIZE HIMSELF WITH ALL DETAILS OF THE WORK AND ALL EXISTING FIELD CONDITIONS.
3. CONTRACTOR SHALL PROVIDE A COMPLETE ELECTRICAL INSTALLATION INCLUDING ALL WORK CUSTOMARILY INCLUDED EVEN IF NOT SPECIFICALLY CALLED OUT.
4. THE ELECTRICAL CONTRACTOR SHALL CAREFULLY COORDINATE HIS WORK WITH OTHER CONTRACTORS THROUGH THE GENERAL CONTRACTOR FOR SPACE REQUIREMENTS, ETC.
5. CONTRACTOR SHALL VERIFY ALL MECHANICAL EQUIPMENT NAMEPLATE DATA BEFORE ANY WORK IS DONE AND MAKE ANY ADJUSTMENTS IN BREAKER AND WIRE SIZE AS MAY BE REQUIRED.
6. SHOULD THE CONTRACTOR FIND DISCREPANCIES OR OMISSIONS IN THE CONTRACT DOCUMENTS OR BE IN DOUBT AS TO INTENT, HE SHALL IMMEDIATELY OBTAIN CLARIFICATION FROM THE ARCHITECT OR ENGINEER.
7. THE ELECTRICAL DRAWINGS ARE SCHEMATIC AND ARE NOT INTENDED TO SHOW THE EXACT LOCATION OF CONDUITS, OUTLETS, ETC. THE CONTRACTOR SHALL REFER TO ARCHITECTURAL, MECHANICAL, AND PLUMBING DRAWINGS AND SHALL FIT HIS WORK TO CONFORM WITH THE BUILDING CONSTRUCTION AND WITH THE OTHER TRADES.
8. SHOULD ANY ELECTRICAL POWER, LIGHT OR AUXILIARY, CIRCUITS, FEEDERS OR EQUIPMENT BE SEVERED, DISCONNECTED OR DELETED IN THE PROCESS OF CONSTRUCTION OR REMODELING WHICH IS NOTED A RESULT OF CONTRACT PLANS AND SPECIFICATIONS, AND UNLESS IT IS SPECIFICALLY DESIGNATED BY THE DRAWINGS TO BE DELETED, THEN SAID CIRCUIT OR FEEDER SHALL BE RESTORED TO FIRST CLASS WORKING CONDITION. THE RESTORATION SHALL INCLUDE ANY RE–ROUTING, RELOCATIONS OR REPLACEMENT AS MAY BE NECESSITATED BY THE ARCHITECTURAL AND STRUCTURAL CONSTRUCTION. ANY SUCH WORK REQUIRED SHALL BE INCLUDED IN THE ELECTRICAL CONTRACT AND NO EXTRA COMPENSATION WILL BE GRANTED.
9. THE ELECTRICAL CONTRACTOR SHALL DO ALL CUTTING, PATCHING AND REPAIRING REQUIRED TO DO THIS WORK. REPAIRING OF WORK SHALL BE COMPARABLE TO WORK CUT. PAINT TO MATCH ADJACENT SURFACES OR AS DIRECTED BY ARCHITECT. COORDINATE WITH GENERAL CONTRACTOR.
10. ELECTRICAL CONTRACTOR SHALL VERIFY EXACT HEIGHT OF ALL COUNTER TOPS AND BACK–SPLASHES ON CASEWORK SHOP DRAWINGS, AND CHANGE SPECIFIED MOUNTING HEIGHT OF WALL OUTLETS INDICATED AS REQUIRED SO THAT BOTTOM OF OUTLET BOX IS 2" ABOVE TOP OF BACK–SPLASH OR IF NO BACK–SPLASH IS USED, 4" ABOVE COUNTERTOP.
11. DO NOT MOUNT OUTLETS BACK–TO–BACK. PROVIDE MINIMUM 24" SEPARATION IN FIRE RATED WALLS.
12. ALL OUTLETS IN EXPOSED CONCRETE BLOCKS SHALL BE ADJUSTED AS REQUIRED TO ALLOW CUTTING OF ONLY ONE BLOCK. MAINTAIN UNIFORM HEIGHTS THROUGHOUT THE BUILDING.
13. VERIFY ALL DOOR SWINGS WITH ARCHITECT PRIOR TO ROUGHING LIGHT SWITCHES.
14. CONTRACTOR SHALL CHECK ALL LIGHT FIXTURES FOR EXACT TYPE MOUNTING AND SPACE REQUIRED BEFORE ROUGHING IN.
15. BRANCH CIRCUITS #12 A.W.G. AND 3/4" CONDUIT (GALVANIZED) MINIMUM. CONDUCTORS SHALL BE 98% CONDUCTIVITY COPPER, SEE SPECIFICATIONS FOR TYPE INSULATION.
16. VOLTAGE DROP: FOR 20 AMP CIRCUITS OVER 100 FEET AND LESS THAN 175 FEET, USE #10 CONDUCTORS. FOR 20 AMP CIRCUITS OVER 175 FEET AND LESS THAN 275 FEET, USE #8 CONDUCTORS.
17. ALL CONDUITS CROSSING EXPANSION JOINTS SHALL HAVE EXPANSION TYPE FITTINGS.
18. THE ATTACHED DRAWINGS WERE DEVELOPED FROM RECORD DRAWINGS AND INFORMATION PROVIDED BY OTHERS WHICH MAY NOT REFLECT ACTUAL FIELD CONDITIONS. THE CONTRACTOR SHALL VERIFY ALL CONDITIONS IN THE FIELD BEFORE PROCEEDING WITH SUBSEQUENT WORK. THE DESIGN TEAM SHALL BE NOTIFIED OF ANY DISCREPANCIES OR CONFLICTS WITH DRAWINGS FOR CLARIFICATION PRIOR TO PROCEEDING WITH WORK.
19. FOR ALL SINGLE–PHASE CIRCUITS SHARING A NEUTRAL WITH OTHER SINGLE–PHASE CIRCUITS, CONTRACTOR SHALL INSTALL CIRCUIT BREAKER HANDLE TIES WHICH WILL PROVIDE FOR SIMULTANEOUS DISCONNECTION OF ALL CIRCUIT BREAKERS FOR CIRCUITS WHICH SHARE THE SAME NEUTRAL. HANDLE TIE SHALL NOT PREVENT THE REQUIRED TRIPPING OF A BREAKER.
20. QUESTIONS REGARDING THESE DRAWINGS SHALL BE ADDRESSED TO ENGINEER PRIOR TO AWARDING OF CONTRACT. OTHERWISE THE ENGINEER'S INTERPRETATION OF THE MEANING AND INTENT OF DRAWINGS SHALL BE FINAL.
21. FIRE ALARM VENDOR IS RESPONSIBLE FOR REVIEWING ENTIRE CONSTRUCTION DOCUMENT PACKAGE FOR ADDITIONAL FIRE ALARM REQUIREMENTS THAT MAY BE INCLUDED ON OTHER DISCIPLINES' DRAWINGS AND SPECIFICATIONS, TO INCLUDE BUT NOT LIMITED TO, PLUMBING, CIVIL, MECHANICAL, ELEVATOR, A/V, THEATRICAL LIGHTING, FOOD SERVICE, AND SECURITY.
22. PROVIDE ARC FLASH WARNING LABELS ON EXISTING AND NEW PANELS THAT COMPLY WITH NEC110.16.
23. LABEL PANELS PER MEC110.24.
24. FIRE ALARM CONTRACTOR SHALL BE LICENSED WITH THE STATE FIRE MARSHALLS OFFICE AND SHALL BE NICET III CERTIFIED AT MINIMUM.

DO NOT SCALE DIMENSIONS FROM DRAWINGS.
CONSULT OWNER/ARCHITECT FOR EXACT DIMENSIONAL DATA.

LIGHT FIXTURE SCHEDULE

MARK	DESCRIPTION	LAMPS	MANUFACTURER
LF4 (EF4)	4' LED STRIP FIXTURE WITH LENS, 277V, 4000K (WITH EMERGENCY BATTERY)	4600Lm / 43W	METALUX# 4ST2L4040R–(EBPLED14W) OR APPROVED EQUAL
LTA (ETA)	2X4 LED FLAT PANEL, SELECTABLE LUMENS AND CCT, 277V, 4000K (WITH EMERGENCY BATTERY)	MAX 6300Lm / MAX 56.3W	METALUX #24FPSL2SCT3–(EL14W) OR APPROVED EQUAL
LHA (EHA)	LED LOW BAY FIXTURE, TO BE MOUNTED AT 13'0" A.F.F. 277V, 4000K (WITH EMERGENCY BATTERY)	12000Lm / 86.9W	METALUX #LHB–12–UNV–L840–CD–(EBPLED14W) OR APPROVED EQUAL
WPA	LED WALL PACK, 277V, 4000K, MOUNT AT 12' A.F.G., WITH PHOTOCELL FOR DUSK TO DAWN OPERATION.	6000Lm / 58W	LUMARK #XTOR68W–FINISH–PB277VBUTTONPC OR APPROVED EQUAL
XC	EXIT AND EMERGENCY FIXTURE WITH BATTERY. POWERS XD FIXTURE AS WELL, 277V.		SURELITES#APCH7R OR APPROVED EQUAL
XD	EXTERIOR 2 HEAD EGRESS FIXTURE. POWERED BY XC FIXTURE BATTERY.		SURELITES#APWR2 OR APPROVED EQUAL

NOTES:

1. MANUFACTURER'S PART NUMBERS ARE FOR LEVEL OF QUALITY AND PERFORMANCE. E.C. IS TO PROVIDE ALL OPTIONS AND ACCESSORIES TO COMPLY WITH DESCRIPTION AS WELL AS MODEL NOS.
2. 10 DAY PRIOR APPROVAL IS REQUIRED ON ALL FIXTURES NOT SPECIFICALLY CALLED OUT OR LISTED AS "OR EQUAL."
3. E.C. IS TO COORDINATE FIXTURE COLORS WITH ARCHITECT PRIOR TO ORDERING.
4. E.C. IS TO VERIFY CEILING TYPE AND COMPATIBILITY WITH FIXTURES PRIOR TO ORDERING.
5. FUSE FIXTURES IN FIELD.

HYDE ENGINEERING, INC.
1525 Perimeter Parkway
Suite 275
Huntsville, Alabama 35801
(P) 256.270.8013
E-MAIL: MORGAN@HYDE-EGR.COM

ENGINEER: Morgan B. Reyes
PROJECT #: 22181.0

ALABAMA — REGISTERED — NO. 35960 — PROFESSIONAL ENGINEER — MORGAN B. REYES — 07/26/22

NOLA VANPEURSEM ARCHITECTS, PC
MEMBER OF THE AMERICAN INSTITUTE OF ARCHITECTS
301 JEFFERSON STREET
HUNTSVILLE, ALABAMA 35801
(256) 533-6617
NVPARCHITECTS.COM

THIS DRAWING MAY NOT BE REPRODUCED IN WHOLE OR IN PART WITHOUT THE CONSENT OF NOLA|VANPEURSEM ARCHITECTS

MADISON COUNTY SCHOOLS

CAREER TECH CENTER
MACHINE SHOP

1275 JORDAN ROAD
HUNTSVILLE, ALABAMA 35811

JOB NUMBER
22256

RTC / MBR / 07/26/2022
DRAWN - CHECKED - DATE

REVISIONS

No.	Description	Date

SHEET TITLE
LEGEND AND NOTES

SHEET NUMBER
E0.1
OF

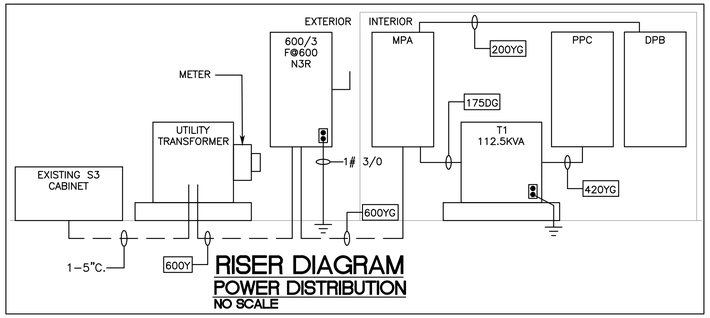

RISER DIAGRAM
POWER DISTRIBUTION
NO SCALE

TRANSFORMER TABLE – 480V PRIMARY – 208/120V, SECONDARY

KVA	FL AMPS	BKR SIZE	FDR	TRANSFORMER GROUNDING ELECTRODE (3)		FL AMPS	BKR SIZE	FDR
				WIRE AWG	CONDUIT IN			
3PH	480V	(1)	(2)	1/0	1	208V	(1)	(2)
112.5	135.3	175	175DG	1/0	1	312.3	400	420YG

NOTES:
1 – USE DEVICE TYPES INDICATED ON SINGLE LINE DIAGRAM.
2 – REFERENCE FEEDER TABLE FOR FEEDER SIZE
3 – PROVIDE COPPER GROUNDING ELECTRODE

DRY–TYPE TRANSFORMER WITH COPPER WINDINGS. PROVIDE NEMA 3R ENCLOSURE FOR ALL EXTERIOR TRANSFORMERS.

FEEDER SCHEDULE

20SG	2#12 & 1#12G.–1/2"C.	30SG	2#10 & 1#10G.–3/4"C.
20DG	3#12 & 1#12G.–1/2"C.	40DG	3#8 & 1#10G.–1"C.
60DG	3#6 & 1#10G.–1 1/4"C.	175DG	3#2/0 & 1#6G.–2 1/2"C.
200YG	4#200MCM & 1#2G.–3"C.	420YG	2 SETS OF 4#3/0 & 1#6G.–3"C.
600YG	4#500MCM & 1#2G.–4"C.	600Y	4#500MCM –4"C.

SERVICE NOTES:

1. THE SECONDARY SERVICE: 277/480V, 3ø, 4W., GROUNDED NEUTRAL, WYE CONNECTED AS SHOWN ON SINGLE LINE DIAGRAM.
2. ARRANGE WITH LOCAL ELECTRICAL SERVICE COMPANY FOR SERVICE TO BE BROUGHT TO BUILDING, AND FOR THE INSTALLATION OF METER. PAY ALL CHARGES (IF ANY) IN CONNECTION THEREWITH, INCLUDING PERMANENT METER DEPOSIT, WHICH DEPOSITS WILL BE REFUNDED TO CONTRACTOR AT TIME OF OWNER'S OCCUPANCY IN THE BUILDING.
3. VERIFY WITH UTILITY COMPANIES INVOLVED THAT LOCATIONS, ARRANGEMENT, POWER COMPANY VOLTAGE, PHASE, METERING REQUIRED, AND CONNECTIONS TO UTILITY SERVICE ARE IN ACCORDANCE WITH THEIR REGULATIONS AND REQUIREMENTS. IF THEIR REQUIREMENTS ARE AT VARIANCE WITH THESE DRAWINGS AND/OR SPECIFICATIONS, CONTRACT SHALL INCLUDE AN ADDITIONAL COST NECESSARY TO MEET THOSE REQUIREMENTS WITHOUT EXTRA COST TO OWNER AFTER BIDS ARE ACCEPTED.
4. OBTAIN FROM UTILITY COMPANY ANY ADDITIONAL CHARGES FOR SERVICE OF TYPE, SIZE, AND LOCATION CALLED FOR. INCLUDE CHARGES IN BID TO BE PAID BY CONTRACTOR TO APPROPRIATE PARTY. PROVIDE PAYMENT OF THESE CHARGES SO AS TO ALLOW LOGICAL PROGRESSION OF CONSTRUCTION AND AVOID DELAY OF COMPLETION.
5. COORDINATE SERVICE WORK WITH POWER COMPANY. FURNISH AND INSTALL ALL SERVICE RELATED ITEMS NOT PROVIDED BY THE POWER COMPANY. PERFORM WORK IN ACCORDANCE WITH THEIR REQUIREMENTS AND RECOMMENDATIONS.

RISER NOTES:

1. INDUSTRY AVERAGE EQUIPMENT SIZES WERE USED TO DETERMINE FIT AND WORKING CLEARANCES. E.C. IS TO VERIFY FIT AND WORKING CLEARANCES BASED ON ACTUAL EQUIPMENT CONSIDERED.
2. SEE FLOOR PLANS FOR PLACEMENT OF EQUIPMENT.
3. PROVIDE DOUBLE LUGS IN TWO SECTION PANELS.
4. ALL EXTERIOR EQUIPMENT TO BE IN NEMA 3R ENCLOSURES.

SHORT CIRCUIT, COORDINATION, AND ARC FLASH:

1. ACTUAL AVAILABLE FAULT CURRENT DATA WAS NOT OBTAINED FROM THE POWER COMPANY. E.C. IS TO OBTAIN FAULT CURRENT DATA FROM POWER COMPANY.
2. E.C. TO PROVIDE SHORT CIRCUIT, COORDINATION, AND ARC FLASH STUDIES FOR ALL NEW EQUIPMENT AS WELL AS EXISTING UPSTREAM EQUIPMENT.
3. STUDIES ARE TO START AT UTILITY SOURCE AND/OR GENERATOR AND INCLUDE ALL EXISTING UPSTREAM EQUIPMENT.
4. E.C. IS RESPONSIBLE FOR COLLECTING ALL DATA NECESSARY TO COMPLETE STUDY.
5. STUDIES ARE TO BE PERFORMED USING SKM POWERWARE, EASYPOWER, OR ETAP SOFTWARE UNDER THE SUPERVISION OF A REGISTERED ENGINEER. ARC FLASH STUDIES SHALL BE CONSISTENT WITH IEEE 1584.
6. PROVIDE PRELIMINARY STUDY REPORT AT TIME OF POWER EQUIPMENT SUBMITTALS. POWER EQUIPMENT SUBMITTALS WILL BE REJECTED WITHOUT PRELIMINARY STUDY.
7. USE RESULTS OF STUDY TO SELECT AIC RATINGS, BREAKER TYPES, ETC. FOR POWER EQUIPMENT PRIOR TO ORDERING EQUIPMENT.
8. MARK EQUIPMENT PER BOTH NFPA 70 AND 70E TO INCLUDE, BUT NOT LIMITED TO, ARC FLASH LABELS.
9. PROVIDE FINAL STUDY REPORT AS PART OF CLOSE–OUT DOCUMENTATION (BOTH HARD COPY AND ELECTRONIC PDF FORM).

EQUIPMENT SCHEDULE

QTY	MARK	DESCRIPTION	ELECTRICAL CHARACTERISTICS VOLT/PHASE	KW	HP	FLA	PANEL	DISCONNECT SW. SIZE	DISCONNECT SW. FUSE	FEEDER	REMARKS
1	CL 1	CNC LATHE	208/3			40	PPB	60	60	60DG	1.2.4.
1	CM 1	CNC MILL	208/3			25	PPB	60	40	40DG	1.2.4.
1	T 1	TORMACH	208/1			24	PPB	30	30	30SG	1.2.4.
1	TT 1	TORMACH TOOLING	120/1			12	PPB	30	20	20SG	1.2.4.
1	M 1	MITYOTO CMM	208/1			16	PPB	30	20	20SG	1.2.4.
6	ML 1	MANUAL LATHE	480/3			16	DPB	30	20	20DG	1.2.4.5.
6	MM 1	MANUAL MILL	480/3			16	DPB	30	20	20DG	1.2.4.
2	SG 1	SURFACE GRINDER	208/3			16	PPB	30	20	20DG	1.2.4.5.
2	VBS 1	VERTICAL BAND SAW	480/3			16	MPA	30	20	20DG	1.2.4.
1	HBS 1	HORIZONTAL BAND SAW	120/1			16	PPB	30	20	20SG	1.2.4.
1	HM 1	HORIZONTAL MILL	208/3			32	PPB	60	40	40DG	1.2.4.
1	DP 1	DRILL PRESS	480/3			16	MPA	30	20	20DG	1.2.4.
2	SDP 1	SMALL DRILL PRESS	120/1			12	PPB	30	20	20SG	1.2.4.
2	BS 1	BELT SANDER	120/1			16	PPB	30	20	20SG	1.2.4.
1	EF 101	EXHAUST FAN	120/1	0.027			PPB	MOTOR RATED SWITCH		20SG	1.2.
1	EF 102	EXHAUST FAN	120/1	0.027			PPB	MOTOR RATED SWITCH		20SG	1.2.
1	EF 103A	EXHAUST FAN	120/1	0.027			PPB	MOTOR RATED SWITCH		20SG	1.2.
1	P 9	WATER HEATER	480/3	15			MPA	30	30	30DG	1.2.4.
1	PAC 01	PACKAGED A/C UNIT	480/3			58	MPA	100	80	80DG	1.2.3.4.
1	IU 104	DUCTLESS SPLIT SYSTEM INDOOR UNIT	208/1			10.72	OUTDOOR UNIT	30	20	20DG	1.2.3.4.
1	OU 104	DUCTLESS SPLIT SYSTEM OUTDOOR UNIT	208/1			10.72	PPB	30	20	20DG	1.2.3.4.
1	COMP 1	AIR COMPRESSOR	480/3		15	7.12	MPA	60	40	40DG	1.2.3.4.
1	AF 01	CEILING FAN	208/3		1.35	5.2	PPB	30	20	20DG	1.2.4.
1	AF 02	CEILING FAN	208/3		1.35	5.2	PPB	30	20	20DG	1.2.4.

NOTES:
1. VERIFY NAMEPLATE DATA PRIOR TO ROUGH–IN.
2. PROVIDE REQUIRED WORKING CLEARANCE FOR ALL DISCONNECTS.
3. ALL OUTDOOR EQUIPMENT TO BE NEMA 3R.
4. FUSE TO BE DUAL ELEMENT TYPE.
5. SEE EQUIPMENT SAFETY SWITCH MOUNTING DETAIL ON E0.3

PANEL: MPA | VOLTAGE: 277 /480V | PHASE/WIRE: 3P., 4W. | MAIN BUS RATING: 600A | MAIN CB TRIP: 600A MB SHUNT TRIP
MOUNTING: SURFACE | MINIMUM BREAKER INTERRUPTING CAPACITY (RMS SYM AMPS):

DEVICE:		BRANCH CIRCUIT		PHASE LOAD (VOLT - AMPS)				BRANCH CIRCUIT		DEVICE:
AMPS TRIP	POLES	DESIGNATION	VOLTS-AMPS	NO.	∅ A	∅ B	∅ C	NO.	VOLTS-AMPS	DESIGNATION	POLES	AMPS TRIP
40	3	COMP-1	5000	1	30475			2	25475	T1	3	175
			5000	3		29901		4	24901			
			5000	5			29806	6	24806			
20	1	MACHINE SHOP 100 LIGHTING	3042	7	3042			8				
30	3	P-9	5000	9		5000		10		SPARE	3	60
			5000	11			5000	12				
			5000	13	5000			14				
20	1	EXTERIOR LIGHTING	580	15		580		16		SPARE	3	40
80	3	PAC-01	16000	17			16000	18				
			16000	19	16000			20		SPARE	3	20
			16000	21		16000		22				
100	3	SPARE		23			0	24				
				25	2560			26	2560	VBS-1	3	20
				27		2560		28	2560			
				29			2560	30	2560			
50	3	SPARE CNC AXIS		31	2560			32	2560	VBS-1	3	20
				33		2560		34	2560			
20	1	INTERIOR LIGHTING	514	35			3074	36	2560			
200	3	DPB	30720	37	33280			38	2560	DP-1	3	20
			30720	39		33280		40	2560			
			30720	41			33280	42	2560			
		TOTAL	92917		89881		89720			TOTAL CONNECTED LOAD		335.44
										REQUIRED AMPACITY (AMPS)		419.30

PANEL: PPB | VOLTAGE: 120 /208V | PHASE/WIRE: 3P., 4W. | MAIN BUS RATING: 400A | MAIN CB TRIP: 400A MB
MOUNTING: SURFACE | MINIMUM BREAKER INTERRUPTING CAPACITY (RMS SYM AMPS):

DEVICE:		BRANCH CIRCUIT		PHASE LOAD (VOLT - AMPS)				BRANCH CIRCUIT		DEVICE:
AMPS TRIP	POLES	DESIGNATION	VOLTS-AMPS	NO.	∅ A	∅ B	∅ C	NO.	VOLTS-AMPS	DESIGNATION	POLES	AMPS TRIP
30	2	T-1	2496	1	3096			2	600	MACHINE SHOP 100 RECEPT	1	20
			2496	3		3096		4	600	MACHINE SHOP 100 RECEPT	1	20
20	1	TT-1	1440	5			2040	6	600	MACHINE SHOP 100 RECEPT	1	20
20	2	M-1	1664	7	2664			8	1000	STORAGE 103 RECEPT	1	20
			1664	9		2264		10	600	MACHINE SHOP 100 RECEPT	1	20
20	3	SG-1	1110	11			1310	12	200	MACHINE SHOP 100 EWC	1	20
			1110	13	1310			14	200	TOILET 101 RECEPT	1	20
			1110	15		1310		16	200	TOILET 102 RECEPT	1	20
20	3	SG-1	1110	17			1510	18	400	EXTERIOR RECEPT	1	20
			1110	19	1710			20	600	EXTERIOR RECEPT	1	20
			1110	21		1510		22	400	MACHINE SHOP 100 RECEPT	1	20
20	1	HBS-1	1920	23			2320	24	400	MACHINE SHOP 100 RECEPT	1	20
40	3	HM-1	2220	25	3020			26	800	MACHINE SHOP 100 RECEPT	1	20
			2220	27		3020		28	800	MACHINE SHOP 100 RECEPT	1	20
			2220	29			3020	30	800	MACHINE SHOP 100 RECEPT	1	20
40	4	AC-1	2220	31	2620			32	400	MACHINE SHOP 100 RECEPT	1	20
			2220	33		2620		34	400	MACHINE SHOP 100 RECEPT	1	20
			2220	35			3020	36	800	MACHINE SHOP 100 RECEPT	1	20
40	3	SPARE		37	400			38	400	MACHINE SHOP 100 RECEPT	1	20
				39		400		40	400	MACHINE SHOP 100 RECEPT	1	20
				41			1440	42	1440	SDP-1	1	20
20	1	BS-1	1920	43	2720			44	800	MACHINE SHOP 100 RECEPT	1	20
30	2	SPARE		45		1440		46	1440	SDP-1	1	20
				47			2774	48	2774			
20	1	EF-101, 102, 103A	150	49	2924			50	2774	CL-1	3	60
20	1	TBB RECEPT	400	51		3174		52	2774			
20	1	BS-1	1920	53			3654	54	1734			
20	1	TT-1	1440	55	3174			56	1734	CM-1	3	40
30	2	T-1	2496	57		4230		58	1734			
			2496	59			2996	60	500	SIGNAGE	1	20
20	2	OU-104	1115	61	1615			62	500	SIGNAGE	1	20
			1115	63		1115		64		SPARE	1	20
20	3	AF-01	361	65			361	66		SPARE	1	20
			361	67	361			68		SPARE	1	20
			361	69		361		70		SPARE	1	20
20	3	AF-02	361	71			361	72		SPARE	1	20
			361	73	361			74				
			361	75		361		76				
40	3	SPARE		77			0	78		SPARE	3	40
				79	0			80				
				81		0		82				
20	1	FACP	500	83			500	84				
		TOTAL	25975		24901		25306			TOTAL CONNECTED LOAD		216.46
										REQUIRED AMPACITY (AMPS)		270.57

PANEL: DPB | VOLTAGE: 277 /480V | PHASE/WIRE: 3P., 4W. | MAIN BUS RATING: 200A | MAIN CB TRIP: MLO
MOUNTING: SURFACE | MINIMUM BREAKER INTERRUPTING CAPACITY (RMS SYM AMPS):

DEVICE:		BRANCH CIRCUIT		PHASE LOAD (VOLT - AMPS)				BRANCH CIRCUIT		DEVICE:
AMPS TRIP	POLES	DESIGNATION	VOLTS-AMPS	NO.	∅ A	∅ B	∅ C	NO.	VOLTS-AMPS	DESIGNATION	POLES	AMPS TRIP
			2560	1	5120			2	2560			
20	3	ML-1	2560	3		5120		4	2560	MM-1	3	20
			2560	5			5120	6	2560			
20	3	ML-1	2560	7	5120			8	2560			
			2560	9		5120		10	2560	MM-1	3	20
			2560	11			5120	12	2560			
20	3	ML-1	2560	13	5120			14	2560			
			2560	15		5120		16	2560	MM-1	3	20
			2560	17			5120	18	2560			
20	3	ML-1	2560	19	5120			20	2560			
			2560	21		5120		22	2560	MM-1	3	20
			2560	23			5120	24	2560			
20	3	ML-1	2560	25	5120			26	2560			
			2560	27		5120		28	2560	MM-1	3	20
			2560	29			5120	30	2560			
20	3	ML-1	2560	31	5120			32	2560			
			2560	33		5120		34	2560	MM-1	3	20
			2560	35			5120	36	2560			
20	3	SPARE		37	0			38				
				39		0		40		SPARE	3	20
				41			0	42				
		TOTAL	30720		30720		30720			TOTAL CONNECTED LOAD		110.90
										REQUIRED AMPACITY (AMPS)		138.63

HYDE ENGINEERING, INC.
1525 Perimeter Parkway
Suite 275
Huntsville, Alabama 35801
(P) 256.270.8013
E-MAIL: MORGAN@HYDE-EGR.COM
ENGINEER: Morgan B. Reyes
PROJECT #: 22181.0

ALABAMA REGISTERED ENGINEER NO. 35960 PROFESSIONAL ENGINEER MORGAN B. REYES
07/26/22

NOLA VANPEURSEM ARCHITECTS, PC
MEMBER OF THE AMERICAN INSTITUTE OF ARCHITECTS
301 JEFFERSON STREET
HUNTSVILLE, ALABAMA 35801
(256) 533-6617
NVPARCHITECTS.COM

THIS DRAWING MAY NOT BE REPRODUCED IN WHOLE OR IN PART WITHOUT THE CONSENT OF NOLA|VANPEURSEM ARCHITECTS

MADISON COUNTY SCHOOLS

CAREER TECH CENTER
MACHINE SHOP

1275 JORDAN ROAD
HUNTSVILLE, ALABAMA 35811

JOB NUMBER
22256

RTC / MBR / 07/26/2022
DRAWN - CHECKED - DATE

REVISIONS
No. Description Date

SHEET TITLE
RISER DIAGRAM AND SCHEDULES

SHEET NUMBER
E0.2
OF

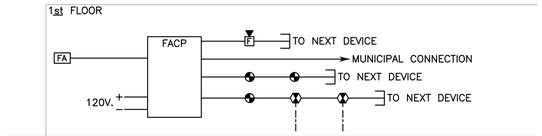

RISER DIAGRAM
FIRE ALARM SYSTEM
NO SCALE

NOTES:

1. PROVIDE WIRING IN CONDUIT PER MANUFACTURER'S REQUIREMENTS.
2. SEE FLOOR PLAN FOR LOCATION AND QUANTITY OF DEVICES.
3. FIRE ALARM SYSTEM LAYOUT IS DIAGRAMMATIC ONLY. PROVIDE ADDITIONAL DEVICES AS REQUIRED BY CODE AND LOCAL AUTHORITIES.
4. COORDINATE LOCATIONS AND CONNECTIONS OF HVAC SHUTDOWN RELAYS WITH HVAC/CONTROLS VENDOR.
5. PROVIDE VOICE EVAC.
6. PROVIDE ADDRESSABLE SYSTEM.
7. PROVIDE FOR 15% GROWTH.
8. IF NOT SHOWN ON FLOOR PLANS PROVIDE 120V. CIRCUIT FOR FACP POWER.
9. PROVIDE TERMINAL CABINETS, NAC PANELS AS REQUIRED PER PROPOSED FIRE ALARM SYSTEM.
10. IF NOT SHOWN ON FLOOR PLAN, PROVIDE POWER TO NAC PANELS FROM FLOOR RECEPTACLE PANEL (AS REQUIRED).
11. PROVIDE REMOTE STATUS & TEST LOCATION FOR DEVICES NOT READILY VISIBLE OR ACCESSIBLE.
12. INTERFACE TO SECURITY SYSTEM. PROVIDE DRY CONTACT CLOSURE. PROVIDE CABLING IN CONDUIT.
13. ON ALARM, ALL DOORS IN EGRESS PATH TO UNLOCK. COORDINATE PROVISION OF POTS PHONELINES WITH OWNER/COM PROVIDER. COORDINATE PROVISION OF POTS PHONELINES WITH OWNER/COM PROVIDER.
14. PROVIDE SMOKE DETECTORS AND INTERFACE TO SMOKE/FIRE DAMPERS AND SMOKE DAMPERS. COORDINATE QUANTITIES AND LOCATIONS WITH HVAC VENDOR.
15. VERIFY FINISH OF ALL FIRE ALARM DEVICES WITH ARCHITECT PRIOR TO ORDERING.
16. FIRE ALARM VENDOR IS RESPONSIBLE FOR REVIEWING ENTIRE CONSTRUCTION DOCUMENT PACKAGE FOR ADDITIONAL FIRE ALARM REQUIREMENTS THAT MAY BE INCLUDED ON OTHER DISCIPLINES' DRAWINGS AND SPECIFICATIONS, TO INCLUDE BUT NOT LIMITED TO, PLUMBING, CIVIL, MECHANICAL, ELEVATOR, A/V, THEATRICAL LIGHTING, FOOD SERVICE, AND SECURITY.

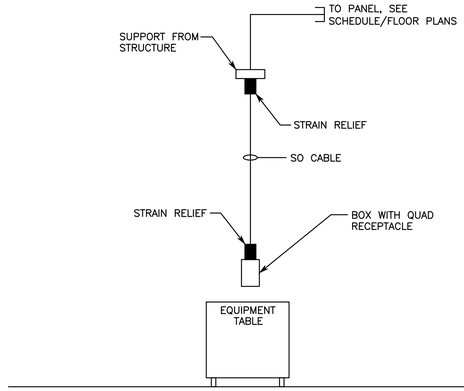

CEILING MOUNTED QUAD OUTLET
NO SCALE

NOTES:

1. VERIFY HEIGHT TO DROP OUTLET WITH HEIGHT OF EQUIPMENT/TABLE TO BE SERVED.

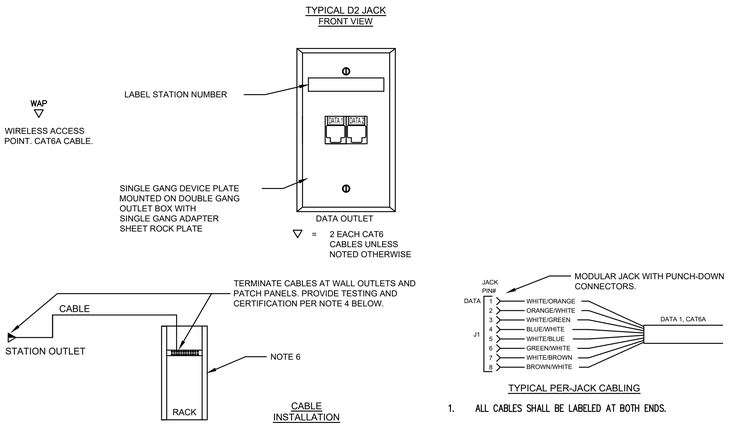

1. ALL CABLES SHALL BE LABELED AT BOTH ENDS.

COMMUNICATIONS SYSTEM NOTES:

1. ALL CABLE SHALL BE 4 PAIR CAT 6A. CABLE SHALL BE 23 A.W.G. AND BE COLOR CODED AS FOLLOWS: WHITE/BLUE, WHITE/ORANGE, WHITE/GREEN, WHITE/BROWN. LABEL ALL CABLES WITH A UNIQUE STATION NUMBER.
2. ALL CABLE IN CONDUIT: 1 OR 2 OUTLETS–3/4"C., 3 OUTLETS–1"C., 4 OUTLETS–1.25"C. 4 OUTLETS ARE THE MAXIMUM FOR ANY HOMERUN.
3. PROVIDE ANALOG "POTS" LINES AT RACK AS REQUIRED. COORDINATE WITH LOCAL PROVIDER.
4. CONTRACT WITH A BUILDING INDUSTRY CONSULTING SERVICE INTERNATIONAL (BICSI) RCDD CERTIFIED CONTRACTOR TO FURNISH, INSTALL AND TEST ALL VOICE AND DATA CABLING. CABLE CONTRACTOR WILL SUPPLY OWNER WITH A HARD AND SOFT COPY OF ALL TEST RESULTS DONE BY THE FLUKE DSP 4300 OR COMPARABLE. A CONTRACTOR WILL PROVIDE TEST RESULTS FOR ALL CABLES PER BICSI STANDARDS. IF CABLE CONNECTIVITY FAILS UPON ACTIVATION, OR DURING WARRANTEE THE CONTRACTOR WILL REPLACE OR REPAIR AT NO COST TO THE OWNER.
5. PROVIDE J HOOKS AND/OR CABLE TRAY ABOVE ACCESSIBLE CEILINGS FOR CABLE MANAGEMENT. IN EXPOSED AREAS OR AREAS WITH HARD CEILING, DATA CABLING SHALL BE IN CONDUIT UNTIL ABOVE AN ACCESSIBLE AREA.
6. PROVIDE WALL MOUNTED DATA RACK
7. INCLUDE PATCH PANELS AND TERMINATE ALL CABLES IN COMM ROOM AND AT USER END.
9. ROUTE A 4 PAIR MULTIMODE MODE OM3 50/125 FIBER FROM COMM ROOM EXISTING BUILDING RACK.

DETAIL
VOICE/DATA SYSTEM
NO SCALE

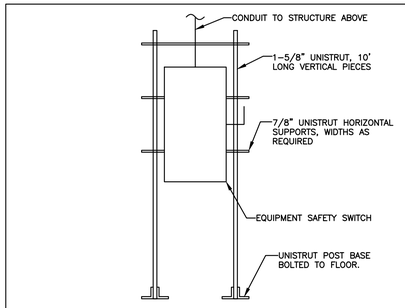

5 EQUIPMENT SAFETY SWITCH
MOUNTING DETAIL
NO SCALE

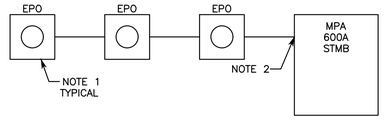

EMERGENCY POWER OFF
DETAIL
NO SCALE

NOTES

1. MUSHROOM TYPE EPO SWITCH WITH SHROUD. YELLOW WITH RED BUTTON. KEYED RESET. EQUAL TO SAFETY TECHNOLOGY INTERNATIONAL #SS2270PO–EN
2. CONNECT EPO SWITCHES TO SHUNT TRIP MODULE ON MAIN BREAKER AT MPA AS REQUIRED.
3. WHEN ANY ONE OF THE EPO SWITCHES IS PRESSED THE SHUNT TRIP SHALL OPEN THE BREAKER.

ALABAMA LICENSED PROFESSIONAL ENGINEER MORGAN B. REYES NO. 35960
07/26/22

NOLA VANPEURSEM ARCHITECTS, PC
MEMBER OF THE AMERICAN INSTITUTE OF ARCHITECTS
301 JEFFERSON STREET
HUNTSVILLE, ALABAMA 35801
(256) 533-6617
NVPARCHITECTS.COM

THIS DRAWING MAY NOT BE REPRODUCED IN WHOLE OR IN PART WITHOUT THE CONSENT OF NOLA|VANPEURSEM ARCHITECTS

MADISON COUNTY SCHOOLS
CAREER TECH CENTER
MACHINE SHOP
1275 JORDAN ROAD
HUNTSVILLE, ALABAMA 35811

JOB NUMBER
22256

RTC / MBR / 07/26/2022
DRAWN - CHECKED - DATE

REVISIONS

No.	Description	Date

SHEET TITLE
FA RISER AND DETAILS

SHEET NUMBER
E0.3
OF

HYDE ENGINEERING, INC.
1525 Perimeter Parkway
Suite 275
Huntsville, Alabama 35801
(P) 256.270.8013
E-MAIL: MORGAN@HYDE-EGR.COM

ENGINEER: Morgan B. Reyes
PROJECT #: 22181.0

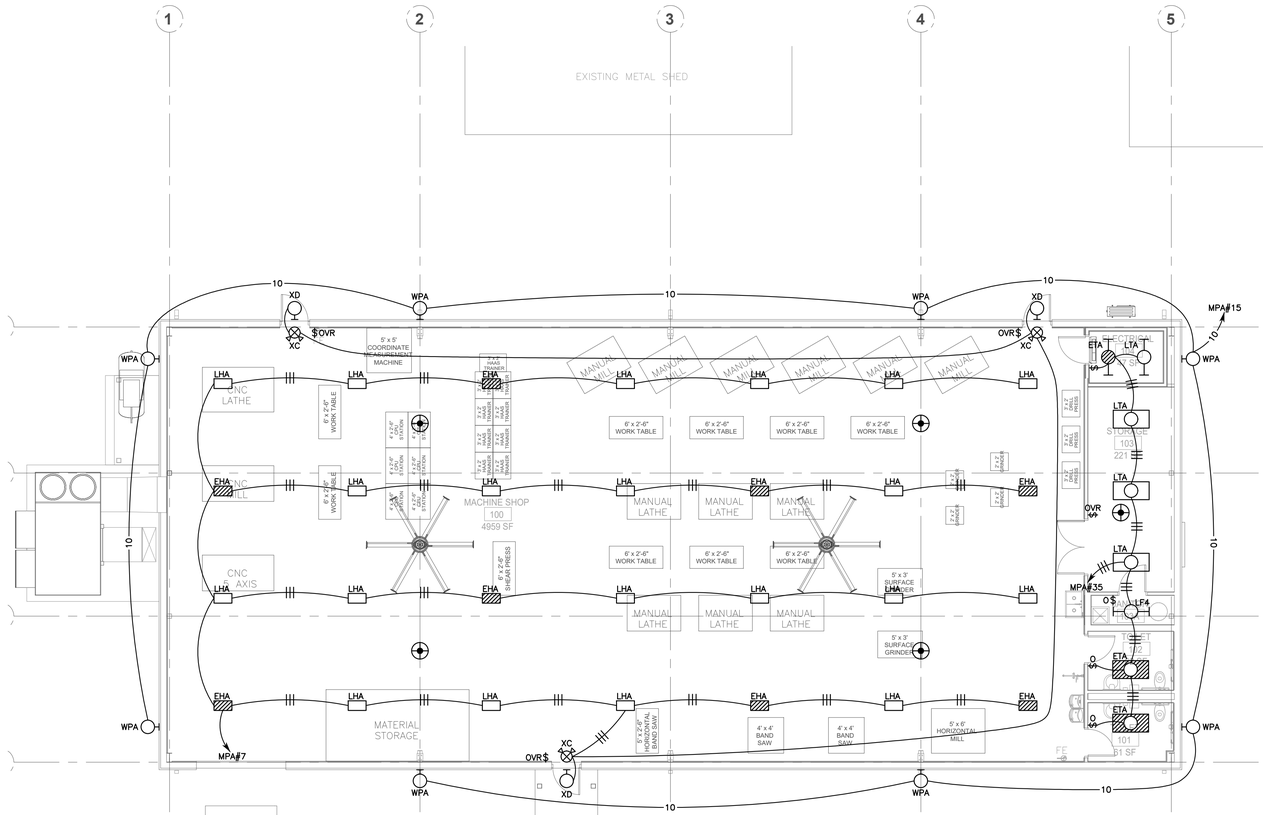

LIGHTING CONTROL NOTES:

A. LIGHTING IN SHOP AREA SHALL BE MANUAL ON, AUTOMATIC OFF WITH FULL DIMMING CONTROL. CEILING MOUNTED DUAL TECHNOLOGY OCCUPANCY SENSORS.

B. LIGHTING IN STORAGE ROOM SHALL BE MANUAL ON, AUTOMATIC OFF WITH DUAL TECHNOLOGY WALL SWITCH

C. LIGHTING IN RESTROOMS AND JANITOR SHALL BE MANUAL ON, AUTOMATIC OFF WITH CEILING MOUNTED DUAL TECHNOLOGY OCCUPANCY SENSOR.

D. EXTERIOR LIGHTING SHALL OPERATE DUSK TO DAWN WITH PE CELL AND CONTRACTOR

HYDE ENGINEERING, INC.
1525 Perimeter Parkway
Suite 275
Huntsville, Alabama 35801
(P) 256.270.8013
E-MAIL: MORGAN@HYDE-EGR.COM

ENGINEER
Morgan B. Reyes

PROJECT #
22181.0

ALABAMA
No. 35960
PROFESSIONAL
ENGINEER
MORGAN B. REYES
07/26/22

NOLA VANPEURSEM
ARCHITECTS, PC
MEMBER OF THE AMERICAN INSTITUTE OF ARCHITECTS
301 JEFFERSON STREET
HUNTSVILLE, ALABAMA 35801
(256) 533-6617
NVPARCHITECTS.COM

THIS DRAWING MAY NOT BE REPRODUCED IN WHOLE OR IN PART WITHOUT THE CONSENT OF NOLA|VANPEURSEM ARCHITECTS

MADISON COUNTY SCHOOLS

CAREER TECH CENTER
MACHINE SHOP

1275 JORDAN ROAD
HUNTSVILLE, ALABAMA 35811

JOB NUMBER
22256

RTC / MBR / 07/26/2022
DRAWN - CHECKED - DATE

REVISIONS

No.	Description	Date

SHEET TITLE
FLOOR PLAN - LIGHTING

SHEET NUMBER
E1.1
OF

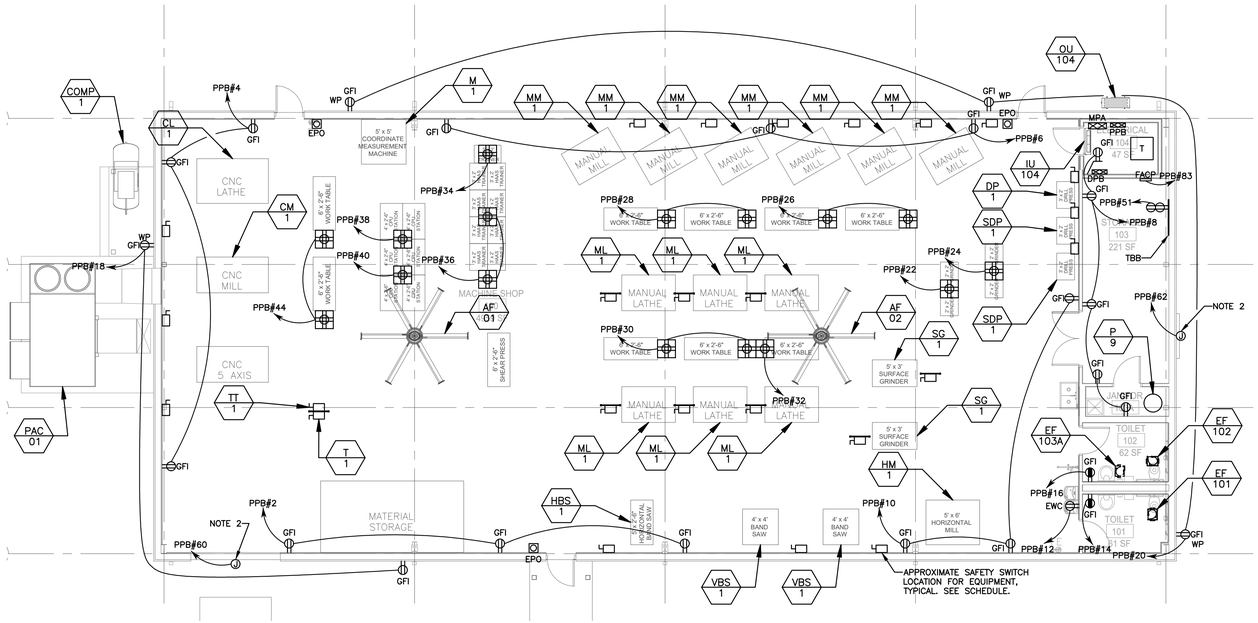

NORTH

FLOOR PLAN
POWER AND AUXILIARY
SCALE 1/8"=1'0"

NOTES:

1. COORDINATE EXACT PLACEMENT OF EQUIPMENT SAFETY SWITCHES WITH ARCHITECT, OWNER, AND ENGINEER PRIOR TO ROUGH IN. DO NOT SCALE OFF PRINTS.

2. POWER FOR FUTURE SIGNAGE. COORDINATE EXACT LOCATION WITH OWNER/ARCHITECT PRIOR TO ROUGH IN.

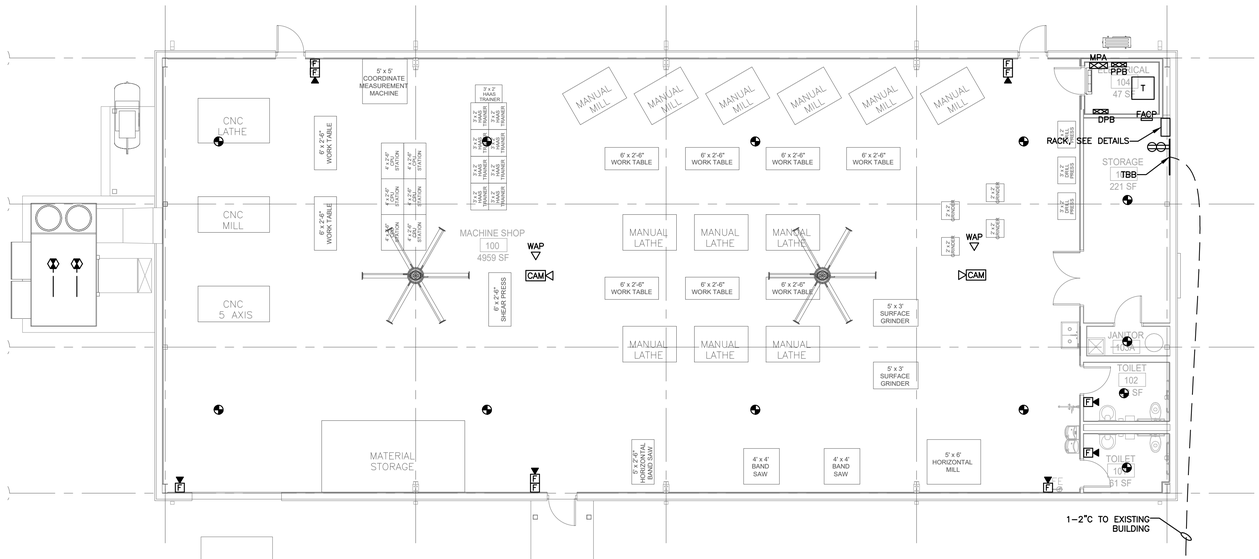

NORTH

FLOOR PLAN
AUXILIARY SYSTEMS
SCALE 1/8"=1'0"

HYDE ENGINEERING, INC.
1525 Perimeter Parkway
Suite 275
Huntsville, Alabama 35801
(P) 256.270.8013
E-MAIL: MORGAN@HYDE-EGR.COM

ENGINEER
Morgan B. Reyes

PROJECT #
22181.0

ALABAMA
No. 35960
PROFESSIONAL
ENGINEER
MORGAN B. REYES
07/26/22

NOLA VANPEURSEM
ARCHITECTS, PC
MEMBER OF THE AMERICAN INSTITUTE OF ARCHITECTS
301 JEFFERSON STREET
HUNTSVILLE, ALABAMA 35801
(256) 533-6617
NVPARCHITECTS.COM

THIS DRAWING MAY NOT BE REPRODUCED IN WHOLE OR IN PART WITHOUT THE CONSENT OF NOLA/VANPEURSEM ARCHITECTS

MADISON COUNTY SCHOOLS

CAREER TECH CENTER
MACHINE SHOP

1275 JORDAN ROAD
HUNTSVILLE, ALABAMA 35811

JOB NUMBER
22256

RTC / MBR / 07/26/2022
DRAWN - CHECKED - DATE

REVISIONS
No. Description Date

SHEET TITLE
FLOOR PLAN - POWER AND AUXILIARY SYSTEMS

SHEET NUMBER
E1.2
OF



SITE PLAN
ELECTRICAL
SCALE 1"=10'

HYDE ENGINEERING, INC.
1525 Perimeter Parkway
Suite 275
Huntsville, Alabama 35801
(P) 256.270.8013
E-MAIL: MORGAN@HYDE-EGR.COM

ENGINEER: Morgan B. Reyes
PROJECT #: 22181.0

ALABAMA
REGISTERED
NO. 35960
PROFESSIONAL
ENGINEER
MORGAN B. REYES
07/26/22

NOLA VANPEURSEM
ARCHITECTS, PC
MEMBER OF THE AMERICAN INSTITUTE OF ARCHITECTS
301 JEFFERSON STREET
HUNTSVILLE, ALABAMA 35801
(256) 533-6617
NVPARCHITECTS.COM

THIS DRAWING MAY NOT BE REPRODUCED IN WHOLE OR IN PART WITHOUT THE CONSENT OF NOLA|VANPEURSEM ARCHITECTS

MADISON COUNTY SCHOOLS

CAREER TECH CENTER
MACHINE SHOP

1275 JORDAN ROAD
HUNTSVILLE, ALABAMA 35811

JOB NUMBER
22256

RTC / MBR / 07/26/2022
DRAWN - CHECKED - DATE

REVISIONS

No.	Description	Date

SHEET TITLE
SITE PLAN - ELECTRICAL

SHEET NUMBER
E2.1
OF