A NEW SENIOR WELLNESS CENTER
at
2829 W. Meighan Boulevard
for the
City of Gadsden, Alabama
Gadsden Bid Request 3485

Sherman Guyton, Mayor

SCHEDULE OF DRAWINGS:

TITLE SHEET

CIVIL

SURVEY
C1.0 of 15 DEMOLITION PLAN
C2.0 of 15 SITE PLAN
C3.0 of 15 GRADING PLAN
C4.0 of 15 STORM PLAN
C5.0 of 15 UTILITY PLAN
C6.0 of 15 EROSION CONTROL PLAN
C7.0 of 15 DETAILS
C7.1 of 15 DETAILS
C7.2 of 15 DETAILS
C7.3 of 15 DETAILS
C7.4 of 15 DETAILS
C7.5 of 15 DETAILS
C7.6 of 15 DETAILS
C7.7 of 15 DETAILS
C7.8 of 15 DETAILS

ARCHITECTURAL

A1.0 of 18 MISCELLANEOUS SITE DETAILS
A2.0 of 18 LIFE SAFETY PLAN
A2.1 of 18 ARCHITECTURAL NOTES–FLOOR PLAN
A2.2 of 18 DIMENSIONS–FLOOR PLAN
A2.3 of 18 REFLECTED CEILING PLAN
A3.0 of 18 SCHEDULES AND DETAILS–SHEET ONE
A3.1 of 18 SCHEDULES AND DETAILS–SHEET TWO
A4.0 of 18 ELEVATIONS
A5.0 of 18 ROOF PLAN
A5.1 of 18 ROOF DETAILS
A6.0 of 18 CROSS SECTIONS–SHEET ONE
A6.1 of 18 CROSS SECTIONS–SHEET TWO
A6.2 of 18 CROSS SECTIONS–SHEET THREE
A7.0 of 18 WALL SECTIONS–SHEET ONE
A7.1 of 18 WALL SECTIONS–SHEET TWO
A7.2 of 18 WALL SECTIONS–SHEET THREE
A8.0 of 18 LARGE SCALE PLANS & SCHEDULES
A8.1 of 18 INTERIOR ELEVATIONS

STRUCTURAL

S1.0 of 06 GENERAL NOTES
S1.1 of 06 GENERAL NOTES
S2.0 of 06 FOUNDATION & FLOOR PLAN
S2.1 of 06 ROOF FRAMING PLAN
S3.0 of 06 BRACED BAYS & TYPICAL DETAILS
S7.0 of 06 SECTIONS

PLUMBING

FP0.1 of 06 FIRE PROTECTION–SCHEDULES AND DETAILS
FP1.1 of 06 FIRE PROTECTION–FLOOR PLAN
P0.1 of 06 PLUMBING–SCHEDULES, NOTES & DETAILS
P0.2 of 06 PLUMBING RISERS
P1.1 of 06 NON–PRESSURE FLOOR PLAN
P2.2 of 06 PRESSURE FLOOR PLAN

MECHANICAL

M0.1 of 09 MECHANICAL LEGEND AND SCHEDULES
M0.2 of 09 MECHANICAL SCHEDULES AND CONTROLS
M0.3 of 09 MECHANICAL DETAILS
M0.4 of 09 MECHANICAL DETAILS
M0.5 of 09 MECHANICAL OSA CALCULATIONS
M0.6 of 09 MECHANICAL OSA CALCULATIONS
M1.1 of 09 HVAC–FLOOR PLAN
M1.2 of 09 HVAC–ROOF PLAN
M2.1 of 09 PIPING–FLOOR PLAN

ELECTRICAL

E0.1 of 10 ELECTRICAL LEGEND
E0.2 of 10 ELECTRICAL SCHEDULES AND DETAILS
E0.3 of 10 AUXILIARY DETAILS
E0.4 of 10 ELECTRICAL DETAILS–1
E0.5 of 10 ELECTRICAL DETAILS–2
E0.6 of 10 ELECTRICAL SINGLE LINE DIAGRAM
E1.0 of 10 FLOOR PLAN–LIGHTING
E2.0 of 10 FLOOR PLAN–POWER
E3.0 of 10 FLOOR PLAN–M&P CONNECTIONS
E4.0 of 10 SITE PLAN–ELECTRICAL

GENERAL NOTES (APPLICABLE TO ALL DWG'S)

1. This Contractor shall verify these Drawings with existing field dimensions & conditions that affect new work under this Contract. Do not scale Drawings. If dimensions are in question, obtain clarification from Architect prior to proceeding with the work. All dimensions relative to existing construction/conditions shall be considered approximate only(+/–). Minor discrepancies shall not relieve the Contractor from completing the work in accordance with the intent set forth. Upon discovery of existing conditions appreciably different from those shown or indicated, notify the Architect or Engineer immediately for further instructions.
2. Restore existing site improvements (shown to remain) where damaged by construction work, where new items are installed in or on a surface, and where existing items are removed.
3. Verify exact location of existing utility lines prior to commencing work.
4. See CIVIL, MECHANICAL & ELECTRICAL drawings for routing and/or connection of new or existing items relative to each trade.
5. Traffic: Conduct construction operations to ensure minimum interference with drives, walks, roads and adjacent occupied homes and other facilities.
6. Ensure safe passage of persons around area of construction. Conduct operations to prevent injury to persons, adjacent property and other improvements.
7. See Notes and Specifications for disposal of all rubbish and debris.

ARCHITECT:

ARCHITECT

THOMAS M. McELRATH, ARCHITECT

THOMAS M. McELRATH, PROJECT ARCHITECT

717 MERIT SPRINGS ROAD
GADSDEN, ALABAMA 35901
PHONE: (256) 490–8244
EMAIL: tom@tmm–architect.com

CONSULTANTS:

CIVIL

MBA ENGINEERS, INC.

KEITH OWENS, P.E.

300 20th NORTH, SUITE 100
BIRMINGHAM, AL 35203
PHONE: (205) 323–6385
FAX: (205) 324–0698

PLUMBING & MECHANICAL

DEWBERRY ENGINEERING, INC.

WADE STEWART, P.E.
SCOTT CARLISLE, P.E.

158 BUSINESS CENTER DRIVE
BIRMINGHAM, AL 35244
PHONE: (205) 988–2069
FAX: (205) 988–2065

STRUCTURAL

MBA ENGINEERS, INC.

KEITH OWENS, P.E.

300 20th NORTH, SUITE 100
BIRMINGHAM, AL 35203
PHONE: (205) 323–6385
FAX: (205) 324–0698

ELECTRICAL

THE EE GROUP, INC.,

JAY MORGAN, P.E.

1521 RAINBOW DRIVE
GADSDEN, AL 35901
PHONE: (256) 413–7717
FAX: (256) 413–7789

STATE OF ALABAMA
THOMAS M. McELRATH
3072
GADSDEN, ALABAMA
REGISTERED ARCHITECT

THOMAS M. McELRATH, ARCHITECT
ARCHITECTURE and SPACE PLANNING
717 MERIT SPRINGS ROAD
GADSDEN, ALABAMA 35901
PHONE: (256) 490-8244
EMAIL: TOM@TMM-ARCHITECT.COM

A NEW SENIOR WELLNESS CENTER
at
2829 W. Meighan Boulevard
for
THE CITY of GADSDEN, ALABAMA

TITLE SHEET

DRAWN	TMM
CHECKED	TMM
SCALE	AS NOTED
DATE	SEPTEMBER 15, 2022
FILE	18–04 TS.dwg
JOB NO.	22–01
REVISIONS	

SET NUMBER

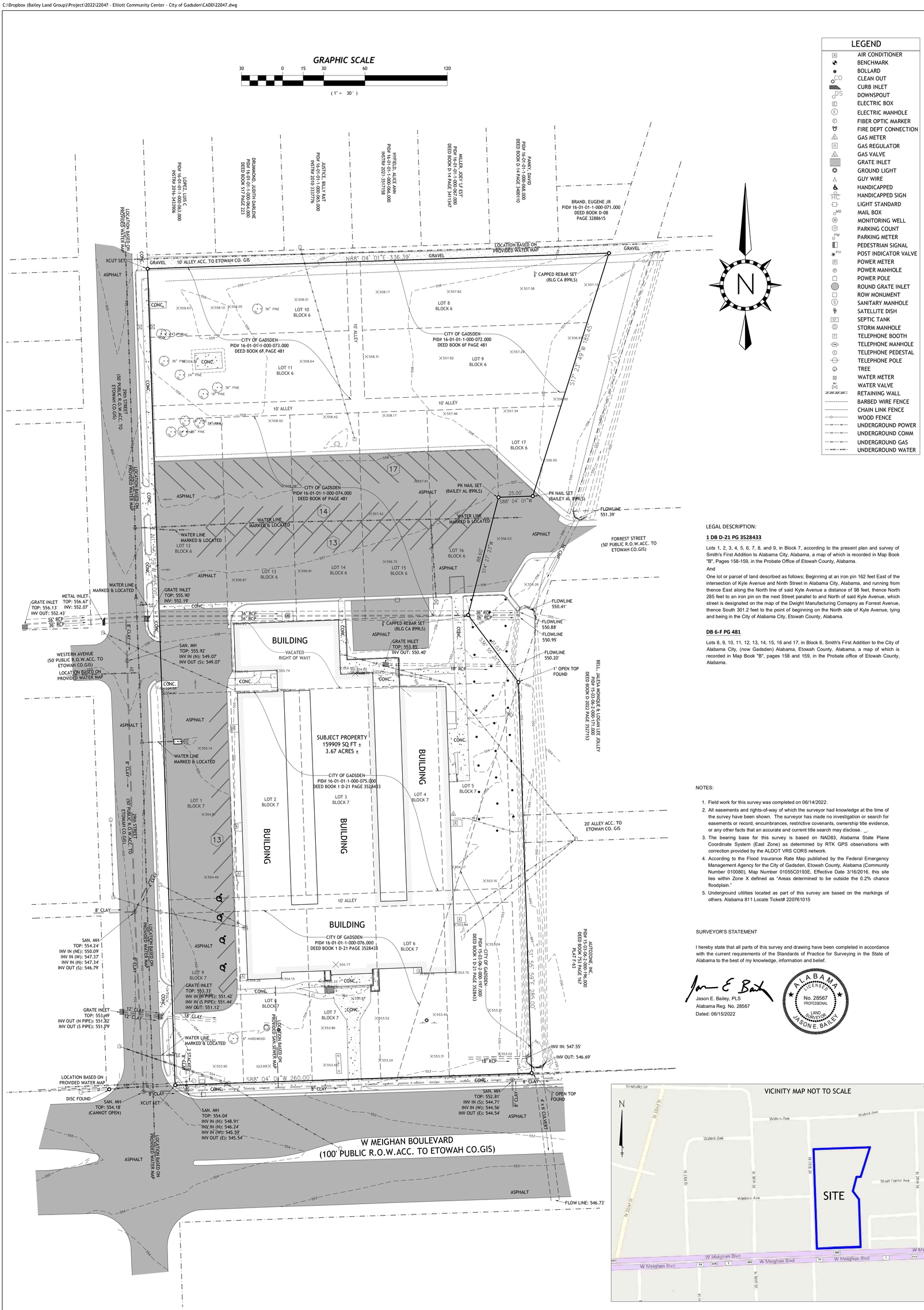

LEGAL DESCRIPTION:

1 DB D-21 PG 3528433

Lots 1, 2, 3, 4, 5, 6, 7, 8, and 9, in Block 7, according to the present plan and survey of Smith's First Addition to Alabama City, Alabama, a map of which is recorded in Map Book "B", Pages 158-159, in the Probate Office of Etowah County, Alabama.

And

One lot or parcel of land described as follows; Beginning at an iron pin 162 feet East of the intersection of Kyle Avenue and Ninth Street in Alabama City, Alabama, and running from thence East along the North line of said Kyle Avenue a distance of 98 feet, thence North 285 feet to an iron pin on the next Street parallel to and North of said Kyle Avenue, which street is designated on the map of the Dwight Manufacturing Comapny as Forrest Avenue, thence South 301.2 feet to the point of beginning on the North side of Kyle Avenue, lying and being in the City of Alabama City, Etowah County, Alabama.

DB 6-F PG 481

Lots 8, 9, 10, 11, 12, 13, 14, 15, 16 and 17, in Block 6, Smith's First Addition to the City of Alabama City, (now Gadsden) Alabama, Etowah County, Alabama, a map of which is recorded in Map Book "B", pages 158 and 159, in the Probate office of Etowah County, Alabama.

NOTES:

1. Field work for this survey was completed on 06/14/2022.
2. All easements and rights-of-way of which the surveyor had knowledge at the time of the survey have been shown. The surveyor has made no investigation or search for easements or record, encumbrances, restrictive covenants, ownership title evidence, or any other facts that an accurate and current title search may disclose. _.
3. The bearing base for this survey is based on NAD83, Alabama State Plane Coordinate System (East Zone) as determined by RTK GPS observations with correction provided by the ALDOT VRS CORS network.
4. According to the Flood Insurance Rate Map published by the Federal Emergency Management Agency for the City of Gadsden, Etowah County, Alabama (Community Number 010080), Map Number 01055C0193E, Effective Date 3/16/2016, this site lies within Zone X defined as "Areas determined to be outside the 0.2% chance floodplain."
5. Underground utilities located as part of this survey are based on the markings of others. Alabama 811 Locate Ticket# 220761015

SURVEYOR'S STATEMENT

I hereby state that all parts of this survey and drawing have been completed in accordance with the current requirements of the Standards of Practice for Surveying in the State of Alabama to the best of my knowledge, information and belief.

Jason E. Bailey, PLS
Alabama Reg. No. 28567
Dated: 06/15/2022

ALABAMA LICENSED No. 28567 PROFESSIONAL LAND SURVEYOR JASON E. BAILEY

SHEET NO. 1

BLG PROJECT NO. 22.047

PLAN NOT VALID WITHOUT SEAL & SIGNATURE

CLIENT/ARCHITECT PROJECT NO.

BAILEY LAND GROUP
LAND SURVEYING & ENGINEERING
4121 Smokey Road
Alabaster, AL 35007
P: 205.978.0080 F: 205.624.3334
www.baileylandgroup.com
CA: AL-899LS

PROJECT: ELLIOTT COMMUNITY CENTER
GADSDEN, ALAMBAMA 35904

CLIENT: MBA ENGINEERS
300 20th ST., SUITE 100, BIRMINGHAM, AL 35203

TITLE: PROPERTY BOUNDARY & TOPOGRAPHIC SURVEY

SCALE: 1" = 30'
DRAWN BY: SB
DATE: 06/15/2022
CHECKED BY: JEB

NO.	DATE	REVISION DESCRIPTION

*PRINTED TO SCALE ON 24"x36" PAPER

COPYRIGHT © 2009-2015 BY BAILEY LAND GROUP, INC. - THESE PLANS MAY NOT BE REPRODUCED WITHOUT EXPRESS WRITTEN CONSENT OF BAILEY LAND GROUP, INC.

DEMOLITION NOTES

1. THE CONTRACTOR SHALL VERIFY LOCATION OF ALL UTILITIES AND PIPING WHICH MIGHT INTERFERE WITH DEMOLITION. ANY DAMAGES TO UTILITIES SHALL BE REPAIRED BY THE CONTRACTOR AT NO ADDITIONAL COST TO THE OWNER.
2. CONTRACTOR SHALL BE RESPONSIBLE FOR REMOVAL OF ALL TREES, VEGETATION, SLABS, FOOTINGS, AND DEBRIS REQUIRED FOR PROPOSED CONSTRUCTION (PER THE OWNER AND ENGINEER).
3. ALL EXISTING PUBLIC SIDEWALKS IN PUBLIC RIGHT OF WAY ARE TO REMAIN IN PLACE AND TO REMAIN OPEN FOR PEDESTRIAN TRAFFIC DURING DEMOLITION.
4. CONTRACTOR IS RESPONSIBLE FOR NOTIFYING ALL UTILITY COMPANIES BEFORE DEMOLITION AND VERIFYING LOCATION OF ALL UTILITIES SHOWN OR NOT SHOWN.
5. THE CONTRACTOR SHALL ATTEMPT TO SAVE ALL TREES ON THE PROPERTY. IN THE EVENT THE CONTRACTOR BELIEVES IT NECESSARY TO REMOVE A TREE, HE/SHE SHALL NOTIFY THE ENGINEER IMMEDIATELY. IN THE EVENT OF ENGINEER/OWNER OWNER APPROVAL, THE TREE TO BE DEMOLISHED SHALL BE CLEARED AND GRUBBED. NO BURNING SHALL BE ALLOWED ON OWNER'S PROPERTY.
6. TREES TO BE DEMOLISHED SHALL BE CLEARED AND GRUBBED. NO BURNING SHALL BE ALLOWED ON OWNER'S PROPERTY.
7. CONTRACTOR SHALL BE RESPONSIBLE FOR COORDINATION AND COST OF THE RELOCATION OF ALL UTILITIES ALONG THE RIGHT-OF-WAY AND ON THE SITE ASSOCIATED WITH THE DEMOLITION OF THIS PROJECT, SUCH AS, BUT NOT LIMITED TO, SIGNAL POLES, SIGNAL CONTROLS, DRAINAGE STRUCTURES, TRAFFIC SIGNS, UTILITY POLES, GUY WIRES, ETC.
8. ALL WATER WORK & MATERIALS SHALL MEET GWWSB STANDARDS AND SPECIFICATIONS.
9. CONTRACTOR SHALL COORDINATE WITH SPIRE TO REMOVE ALL GAS SERVICES AND METERS TO THE BUILDINGS.
10. CONTRACTOR SHALL RESTORE THE SITE TO A CONDITION ACCEPTABLE TO THE OWNER.
11. CONTRACTOR TO VERIFY ACTUAL LIMITS OF DEMOLITION.
12. ALL EXISTING ASPHALT TO BE REMOVED MUST BE SAW-CUT AT THE EDGES TO REMAIN.
13. ALL CONCRETE TO BE REMOVED SHALL BE SAW-CUT OR REMOVED TO THE NEAREST JOINT.
14. ADJUST ALL MANHOLE AND VALVE BOXES THAT ARE TO REMAIN TO FINAL GRADE.
15. CONTRACTOR SHALL PROVIDE AN AS-BUILT DESIGN SURVEY OF THE DEMOLISHED SITE, INCLUDING TOPOGRAPHIC AND UTILITY INFORMATION.
16. THE FINISHED SITE SHALL BE CLEAR OF ALL DEBRIS. THE CONTRACTOR SHALL SEED AND MULCH THE ENTIRE SITE. WATER AS NEEDED IN ORDER TO ACHIEVE A THOROUGH AND CONSISTENT GROUND COVER THAT IS ACCEPTABLE TO OWNER.
17. ALL EXCAVATED MATERIAL MUST BE HAULED OFF OF THE SITE.
18. PRIOR TO REMOVING BUILDING CONFIRM ALL WORK AND DEMOLITION PLAN IS APPROVED WITH GWWSB AND ALL UTILITIES ARE CAPPED OR REMOVED AS REQUIRED BY THE CITY OF GADSDEN UTILITIES

GENERAL NOTES

1. THE CONTRACTOR SHALL BE IN POSSESSION OF ALL REQUIRED PERMITS PRIOR TO ANY CONSTRUCTION EFFORTS.
2. THE CONTRACTOR SHALL VERIFY ALL UTILITY LOCATIONS IN THE FIELD AND SHALL LOCATE ON THE GROUND WITH PAINT OR OTHER EASILY VISIBLE MEANS ALL UNDERGROUND UTILITIES PRIOR TO ANY CONSTRUCTION EFFORTS. CONFLICTS OR DISCREPANCIES SHALL BE BROUGHT TO THE ATTENTION OF THE PROJECT ENGINEER IMMEDIATELY. THE UNDERGROUND UTILITIES SHOWN BY THE SURVEY WERE MADE BY OTHERS, AND ARE SHOWN FOR ILLUSTRATIVE PURPOSES ONLY.
3. THE CONTRACTOR SHALL COORDINATE WITH THE UTILITY COMPANIES CONCERNING CONFLICTS, RELOCATION, REMOVAL, AND INTERRUPTIONS OF SERVICE. THE WORK REQUIRED TO RELOCATE, REMOVE, INSTALL, REPLACE, ETC. UTILITIES SHALL BE THE RESPONSIBILITY OF THE CONTRACTOR, WITHIN THE LIMITS OF WORK.
4. THE CONTRACTOR SHALL PRESERVE AND PROTECT ACCORDING TO THE INSTRUCTIONS OF THE UTILITY INVOLVED, ANY 'LIVE' UTILITIES LOCATED BY THE UTILITY COMPANY OR THE CONTRACTOR.
5. ANY CHANGES OR REVISIONS MADE TO THE PLANS SHALL BE OFFICIALLY SUBMITTED TO THE ENGINEER, THE AFFECTED UTILITIES AND ALL OTHER PERTINENT AGENCIES. APPROVAL OF CHANGES MUST BE RECEIVED BEFORE THE CONTRACTOR PERFORMS THE REQUESTED CHANGES/REVISIONS OR THEY WILL BE AT THE CONTRACTOR'S RISK.
6. THE CONTRACTOR SHALL BE RESPONSIBLE FOR VERIFYING THE EXTENT, LOCATION AND ELEVATION OF THE EXISTING IMPROVEMENTS. IF ANY SIGNIFICANT DIFFERENCE IN SITE CONDITION OR ELEVATION IS FOUND, THE CONTRACTOR SHALL NOTIFY THE PROJECT ENGINEER IMMEDIATELY.
7. THE CONTRACTOR SHALL BE RESPONSIBLE FOR THE REPLACEMENT OF ALL CONCRETE, SIDEWALKS, WALLS, ETC. DAMAGED DURING CONSTRUCTION. ALL DISTURBED AREAS WITHIN PUBLIC RIGHTS OF WAY SHALL BE RESTORED TO THE ORIGINAL CONDITION OR AS ACCEPTED BY A CITY INSPECTOR (PUBLIC IMPROVEMENTS) OR THE OWNER (PRIVATE IMPROVEMENTS).
8. THE CONTRACTOR IS RESPONSIBLE FOR ANY AND ALL TRAFFIC CONTROL MEASURES FOR WORK IN AND ALONG EXISTING ROADS.
9. THE CONTRACTOR SHALL PROVIDE TRAFFIC CONTROL SIGNAGE AND SAFETY MEASURES BEFORE ANY WORK IN STREET OR BLOCKAGES THEREOF. THE CONTRACTOR SHALL PROVIDE APPROPRIATE SIGNAGE AND SAFETY MEASURES BEFORE ANY WORK ON THE SIDEWALK. ALL WORK MUST BE PERMITTED WITH THE CITY TRAFFIC ENGINEERING OFFICE.
10. PROJECT WORK IS TO TAKE PLACE IN AN ACTIVE PEDESTRIAN AREA. CONTRACTOR SHALL TAKE EVERY PRECAUTION FOR THE SAFETY OF THE PEDESTRIAN DURING WORK HOURS AND WHILE THE CONTRACTOR IS NOT PRESENT.
11. THE ENGINEER IS NOT RESPONSIBLE FOR CONSTRUCTION SITE SAFETY. IT IS THE CONTRACTOR'S RESPONSIBILITY FOR CONSTRUCTION SITE SAFETY.
12. THE CONTRACTOR SHALL CHECK THE ARCHITECTURAL PLANS WITH THE SITE PLAN FOR ANY DISCREPANCIES BEFORE WORK BEGINS. THE ENGINEER IS NOT RESPONSIBLE FOR CHANGES AFTER PLANS HAVE BEEN SUBMITTED OR CHANGES MADE DURING CONSTRUCTION.
13. ALL PROPERTY CORNERS OBLITERATED DURING CONSTRUCTION SHALL BE RESET WITH STANDARD IRON PIN SURVEY MONUMENTS.
14. CONTRACTOR MUST HAVE OWNER'S APPROVAL PRIOR TO REMOVING TREES AND SHRUBS NOT SHOWN TO BE REMOVED.
15. CONTRACTOR TO INSTALL CONDUIT CONNECTING ALL LANDSCAPE AREAS FOR IRRIGATION AND POWER.
16. ALL IRRIGATION LINES ENCOUNTERED IN PROJECT AREA SHALL BE PRESERVED, RE-ROUTED, OR REPAIRED SO THAT THE IRRIGATION SYSTEM FUNCTIONS TO THE SATISFACTION OF THE OWNER. THE MAIN IRRIGATION LINES SHALL BE INSTALLED WITHIN PVC CONDUITS UNDER THE PROPOSED PAVING AND SIDEWALK AREAS. FIELD VERIFY LOCATIONS. UNLESS OTHERWISE APPROVED, ALL IRRIGATION LINES DAMAGED OR REMOVED DURING CONSTRUCTION MUST BE CAPPED WHEN DAMAGED AND RECONNECTED/REPAIRED WITHIN 48 HOURS AS TO NOT IMPACT IRRIGATED AREAS.
17. ANY QUESTIONS OR COORDINATION ITEMS SHALL BE BROUGHT TO THE ATTENTION OF THE PROJECT ENGINEER IMMEDIATELY.
18. THE WORK REQUIRED TO RELOCATE, REMOVE, INSTALL, REPLACE, ETC. UTILITIES SHALL BE THE RESPONSIBILITY OF THE CONTRACTOR, WITHIN THE LIMITS OF WORK.

RESURVEY OF PROPERTY

1. THE EXISTING PROJECT SITE HAS 20 PARCELS THAT DIVIDE THE PROPERTY AS WELL AS MULTIPLE 10-FOOT, AND A 50-FOOT RIGHT OF WAY PASSING THROUGH THE PROPERTY.
2. MBA ENGINEERS RECOMMENDS A SURVEY BE PERFORMED TO CONSOLIDATE THE PROPERTY AND VACATE THE EXISTING RIGHT OF WAYS.

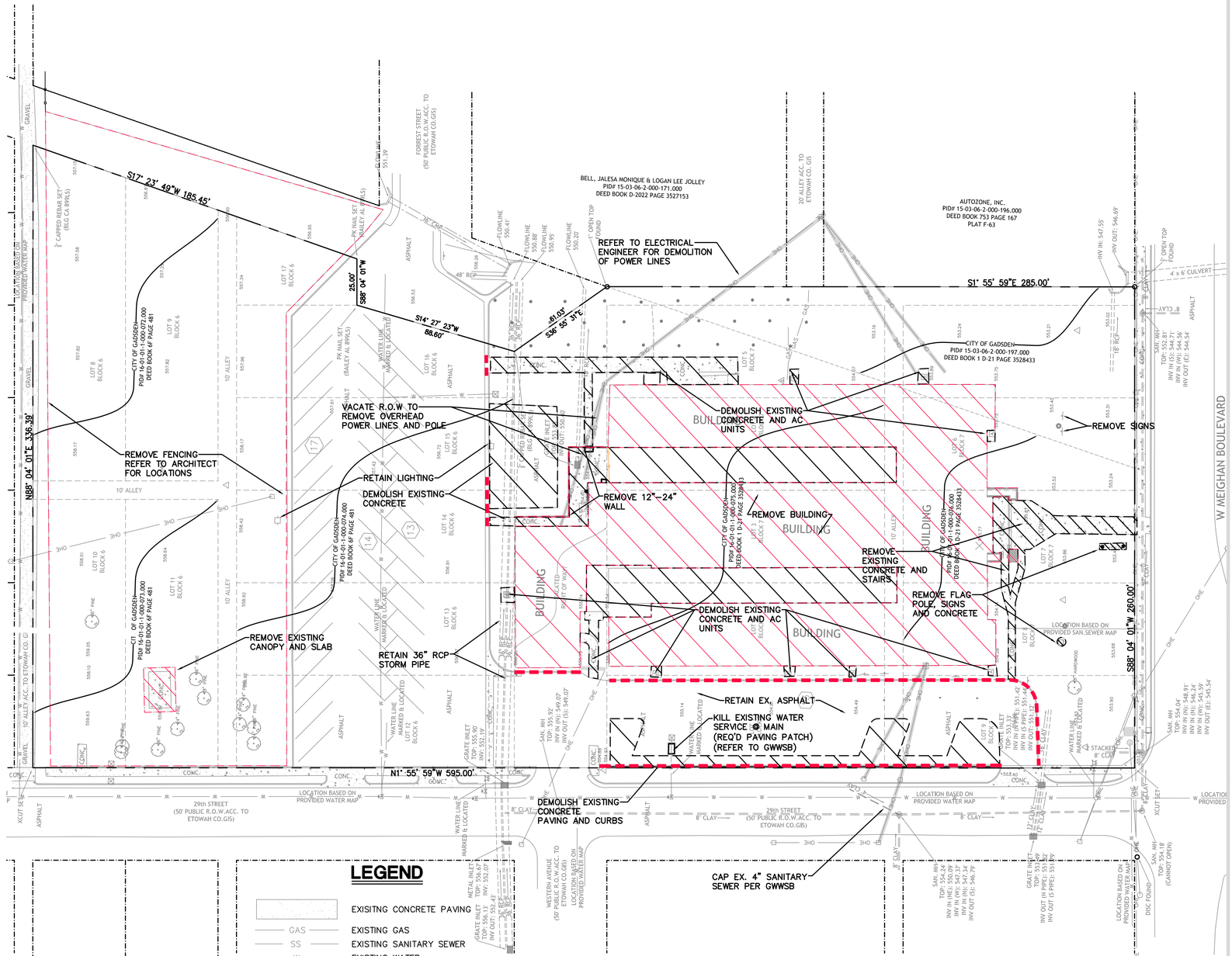

LEGEND

- EXISITNG CONCRETE PAVING
- GAS — EXISTING GAS
- SS — EXISTING SANITARY SEWER
- W — EXISTING WATER
- OHE — EXISTING OVERHEAD POWER
- UP — EXISTING UNDERGROUND POWER
- T — EXISTING TELECOMMUNICATIONS
- 715 — EXISTING CONTOUR
- EXISTING STORM PIPE
- REMOVE EX. BUILDING
- REMOVE EX. PAVING
- REMOVE UTIL. STRUCTURE
- REMOVE EX. CURB
- W — DEMOLISH EXISTING UTILITY
- PROPERTY LINE

MBA ENGINEERS, INC.
STRUCTURAL CIVIL GEOTECHNICAL
300 20TH STREET NORTH, SUITE 100
BIRMINGHAM, ALABAMA 35203
P(205) 323-6385 F(205) 324-0698
TOM CALLISON, P.E. TCALLISON@MBASEI.COM

ALABAMA LICENSED 9-15-22 No. 25020 PROFESSIONAL ENGINEER THOMAS F. CALLISON

THOMAS M. McELRATH, ARCHITECT
ARCHITECTURE and SPACE PLANNING
717 MERIT SPRINGS ROAD
GADSDEN, ALABAMA 35901
PHONE: (256) 490-8244
EMAIL: TOM@TMM-ARCHITECT.COM

A NEW SENIOR WELLNESS CENTER at 2829 W. Meighan Boulevard for THE CITY of GADSDEN, ALABAMA

DEMOLITION PLAN

CONSTRUCTION DOCUMENTS

DRAWN	MSO
CHECKED	TFC
SCALE	AS NOTED
DATE	SEPTEMBER 15, 2022
FILE	C1.0 LAYOUT.DWG
JOB NO.	22-01
REVISIONS	

SHEET C1.0 OF 01 SHEETS

SITE INFORMATION

SITE ADDRESS
2829 W MEIGHAN BLVD
GADSDEN, AL 35904
SECTION, TOWNSHIP, RANGE – SECTION 01, TOWNSHIP 12S, RANGE 5E

PARCEL & ZONING INFORMATION
PARCEL NUMBER(S) – 16–01–01–1–000–074.000, 16–01–01–1–000–075.000, 16–01–01–1–000–076.000, PPIN NUMBER(S) – 049207, 049208, 049209
ZONING – ONE–FAMILY RESIDENCE DISTRICT (R1)

FLOOD ZONE INFORMATION
FLOOD ZONE "X", FIRM NO. 01055C0193E EFF. MARCH 16, 2016
THIS PROPERTY LIES OUTSIDE THE 100–YEAR FLOOD ZONE.

PARKING REQUIREMENTS
1 SPACE PER 3 OCCUPANTS (CONVENTION HALL)
180 SEATS = 60 PARKING SPACES
60 PARKING SPACES REQUIRED, 69 PROPOSED PARKING SPACES PROVIDED (2 STANDARD ADA, 2 VAN ACCESSIBLE SPACES)

SITE NOTES

1. ALL WORK SHALL BE PERFORMED IN ACCORDANCE WITH THE PLANS AND SITE WORK SPECIFICATIONS AND SHALL COMPLY WITH APPLICABLE FEDERALL, STATE AND LOCAL CODES.
2. TOPOGRAPHIC BOUNDARY SURVEY, PROPERTY LINES, LEGAL DESCRIPTION, EXISTING UTILITIES, SITE TOPOGRAPHY WITH SPOT ELEVATIONS, OUTSTANDING PHYSICAL FEATURES AND EXISTING STRUCTURE LOCATIONS CONSISTS OF A SURVEY PROVIDED BY BAILEY LAND GROUP. MBA IS NOT RESPONSIBLE FOR MISSING OR INCORRECT INFORMATION SHOWN.
3. UNLESS OTHERWISE SPECIFIED, ALL CONCRETE SHALL BE A MINIMUM OF 4,000 PSI, 28 DAY COMPRESSIVE STRENGTH. SUBGRADE SHALL BE COMPACTED TO A MIN. OF 98% OF THE MAX DRY DENSITY DEFINED BY THE STANDARD PROCTOR. PROVIDE MINIMUM REINFORCEMENT OF 6x6xNo.6 WELDED WIRE FLAT MESH OR NO. 3 DEFORMED STEEL BARS SPACED ON 18" CENTERS EACH WAY.
4. ALL TRAFFIC SIGNS SHALL CONFORM TO THE UNIFORM TRAFFIC CONTROL MANUAL AND THE STATE OF ALABAMA DEPARTMENT OF TRANSPORTATION.
5. PROJECT SIGNAGE SHALL BE THE RESPONSIBILITY OF THE GENERAL CONTRACTOR.
6. THE CONTRACTOR IS RESPONSIBLE FOR REPAIR OF ANY DAMAGE TO ANY EXISTING IMPROVEMENTS, ONSITE OR OFF SITE, SUCH AS PAVEMENT, UTILITIES, STORM DRAINAGE, LANDSCAPING, ETC. THE REPAIR MUST BE APPROVED BY THE ENGINEER OR ALDOT IF IN ALDOT R.O.W. AND BE EQUAL OR BETTER THAN EXISTING CONDITIONS.
7. CONTRACTOR SHALL SUPPLY AS–BUILT PLANS INDICATING ALL CHANGES AND DEVIATIONS.
8. ANY DEVIATION FROM THESE PLANS MAY CAUSE THE WORK TO BE UNACCEPTABLE.
9. ANY UNANTICIPATED CONDITIONS ENCOUNTERED DURING THE CONSTRUCTION PROCESS SHALL BE IDENTIFIED TO THE ENGINEER IMMEDIATELY.
10. THE CONTRACTOR IS RESPONSIBLE FOR OBTAINING ANY AND ALL OFF–SITE EASEMENTS NOT DELINEATED ON PLANS OR KNOWN OF AT TIME OF PLAN ISSUANCE.
11. PARKING LOT STRIPING SHALL BE INCLUDED IN PAVING CONTRACTOR'S SCOPE OF WORK. STRIPING WILL BE ACCORDING TO OWNER'S SPECIFICATIONS UNLESS NOTED OTHERWISE. ALL STRIPING IS TO HAVE TWO (2) COATS OF PAINT (MIN).
12. REFER TO ARCHITECT FOR ALL HANDRAILS, TYP.
13. ALL DIMENSIONS AND RADII ARE TO THE FACE OF CURB, UNLESS OTHERWISE NOTED. ALL DIMENSIONS SHOWN TO BUILDINGS ARE TO OUTSIDE FACE OF BUILDING.
14. ALL ADA ACCESSIBLE PARKING SIGNS AND STRIPING SHALL BE IN ACCORDANCE WITH THE AMERICANS WITH DISABILITIES ACT (ADA) REQUIREMENTS AND STATE CODE.
15. ALL STRIPED AND CURBED RADII SHALL BE 5' UNLESS OTHERWISE NOTED.
16. ADA COMPLIANT PARKING IS REQUIRED TO HAVE A MAXIMUM SLOPE OF 2% FOR ANY PARKING SPACES, LANDING ZONES, CROSS SLOPES, ETC. THERE IS ALSO A MAXIMUM OF 5% LONGITUDINAL SLOPE FOR AN ADA COMPLIANT SIDEWALK.
17. CONTRACTOR MUST CHECK BUILDING DIMENSIONS ON CIVIL PLAN WITH ARCHITECTS PLAN BEFORE POURING FOOTINGS OR PERFORMING WORK TO BUILDING. IN NO CASE SHALL THE CONTRACTOR SOLELY USE CIVIL DIMENSIONS TO LAYOUT THE BUILDING. IF DISCREPANCIES ARE FOUND, THE CONTRACTOR IS TO REPORT TO ARCHITECT, CONSTRUCTION MANAGER, AND ENGINEER IMMEDIATELY.
18. REFERENCE TO ARCHITECTURAL PLANS FOR BUILDING DIMENSIONS, SIDEWALKS, STEPS, TRANSFORMER PADS, ADDITIONAL SITEWORK ALTERNATE INFORMATION, ETC
19. CONNECT ALL LANDSCAPED AREAS W/ (1) 4" CONDUIT.

DRIVEWAY NOTES

1. REINFORCED CONCRETE PIPE (RCP) IS REQUIRED FOR COMMERCIAL DRIVEWAYS.
2. ASPHALT IS REQUIRED FROM ALDOT RIGHT–OF–WAY TO EDGE OF PAVEMENT.

PERMITTING

1. THE CONTRACTOR IS REQUIRED TO GET ALL NECESSARY PERMITS BEFORE COMMENCING WORK INCLUDING, BUT NOT LIMITED TO:
   – ADEM STORMWATER PERMIT
   – CITY OF GADSDEN; BUILDING PERMIT
   – GADSDEN WATER WORKS AND SEWER BOARD PERMITS, ETC.

ALDOT WORK

1. THE CONTRACTOR IS RESPONSIBLE FOR ATTAINING ALDOT PERMIT PRIOR TO BEGINNING WORK IN ALDOT R.O.W.
2. THE CONTRACTOR IS RESPONSIBLE FOR BONDING WORK IN ALDOT ROW PER ALDOT.

OFF-SITE WORK

1. THE CONTRACTOR IS RESPONSIBLE FOR COORDINATING ALL OFF–SITE WORK WITH ADJOINING PROPERTY OWNERS AND ENSURING ALL NECESSARY PERMISSIONS ARE ATTAINED.
2. THE OWNER SHALL ATTAIN ALL NECESSARY PERMISSIONS PRIOR TO WORK ON ADJOINING PROPERTY.

UNDERCUT NOTES

1. UNDERCUT IS INCLUDED IN THE BASE BID.
2. THE CONTRACTOR SHALL INCLUDE IMPROVEMENTS TO THE SUBGRADE EQUAL TO:
   2.1. 50% REQUIRING UNDERCUT TO 12" BELOW FINAL SUBGRADE AND MOISTURE CONDITIONING AND RE–COMPACTING TO THE DESIGNED SUBRADE
   2.2. 20% REQUIRING UNDERCUT TO 18" BELOW FINAL SUBGRADE AND REPLACEMENT WITH PROPERLY COMPACTED STRUCTURAL FILL (OFFSITE).

CONCRETE NOTES

1. CONTRACTOR TO SUBMIT JOINTING PLAN TO ARCHITECT FOR APPROVAL

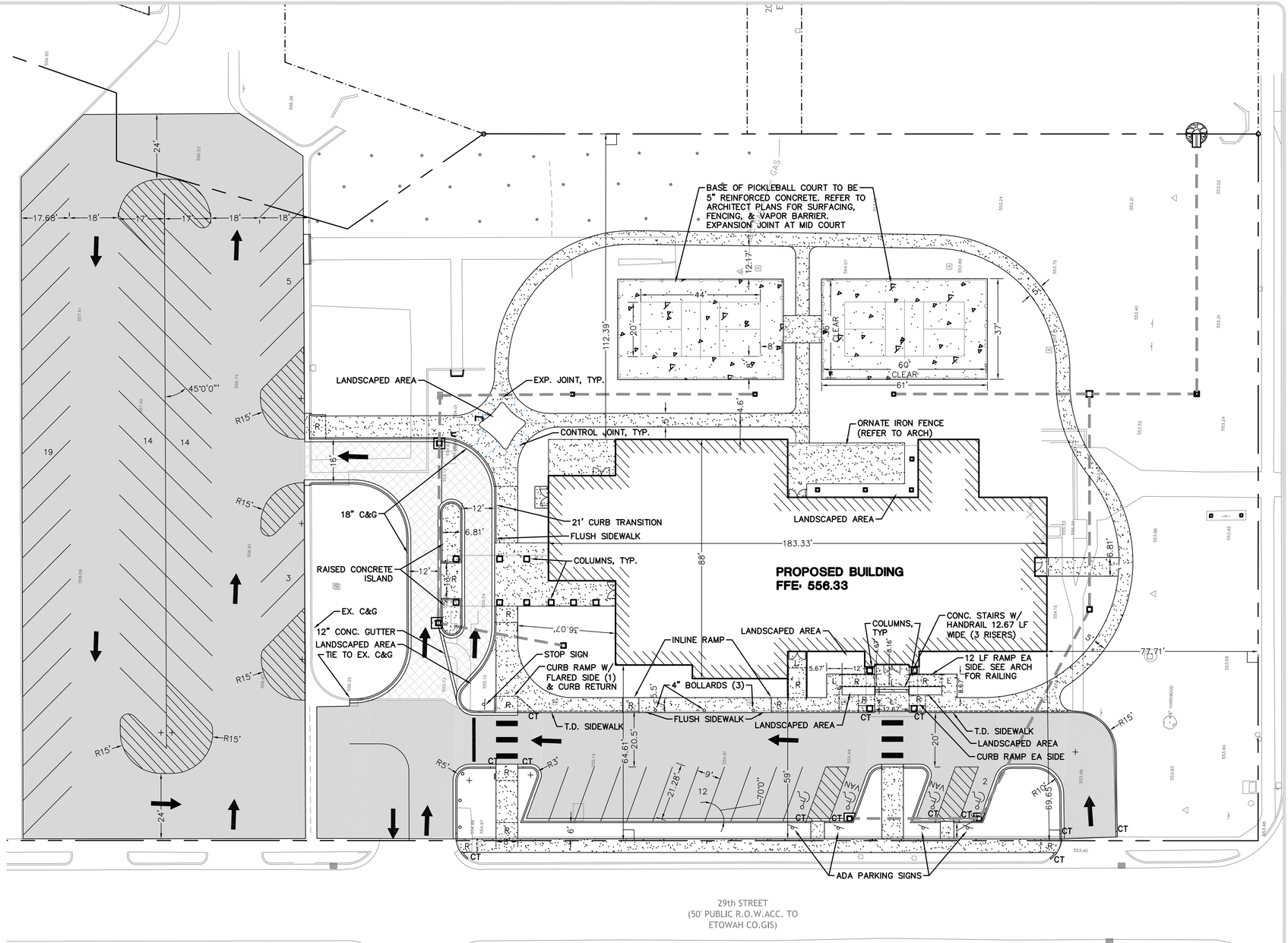

LEGEND

- PROPERTY LINE
- PROPOSED STANDARD DUTY CONCRETE PAVING
- PROPOSED HEAVY DUTY CONCRETE PAVING FOR COURTS
- PROPOSED 1 1/2" ASPHALT OVERLAY
- PROPOSED STANDARD DUTY ASPHALT PAVING
- X'C.T. — PROPOSED 18" CURB & GUTTER (X' CURB HEIGHT TRANSITION)
- HANDICAP ACCESSIBLE UNIT
- PROPOSED TURNDOWN SIDEWALK

GRAPHIC SCALE
20 0 10 20 40 80
(IN FEET)
1 inch = 20 ft.

MBA ENGINEERS, INC.
STRUCTURAL CIVIL GEOTECHNICAL
300 20TH STREET NORTH, SUITE 100
BIRMINGHAM, ALABAMA 35203
P(205) 323-6385 F(205) 324-0698
TOM CALLISON, P.E. TCALLISON@MBASEI.COM

ALABAMA LICENSED 9-15-22 No. 25020 PROFESSIONAL ENGINEER THOMAS F. CALLISON

THOMAS M. McELRATH, ARCHITECT
ARCHITECTURE and SPACE PLANNING
717 MERIT SPRINGS ROAD
GADSDEN, ALABAMA 35901
PHONE: (256) 490-8244
EMAIL: TOM@TMM-ARCHITECT.COM

A NEW SENIOR WELLNESS CENTER
at
2829 W. Meighan Boulevard
for
THE CITY of GADSDEN, ALABAMA

SITE PLAN

CONSTRUCTION DOCUMENTS

DRAWN	MSO
CHECKED	TFC
SCALE	AS NOTED
DATE	SEPTEMBER 15, 2022
FILE	C1.0 LAYOUT.DWG
JOB NO.	22–01
REVISIONS	

SHEET C2.0 OF 01 SHEETS

GRADING NOTES

1. NO GEOTECHNICAL REPORT HAS BEEN PERFORMED FOR THE PROJECT. THE CONTRACTOR SHALL BE RESPONSIBLE FOR GEOTECHNICAL EXPLORATION IN ORDER TO SUBMIT AN APPROPRIATE BID. THE ENGINEER ASSUMES NO LIABILITY IN SITE FEATURES THAT RELY ON GEOTECHNICAL EVALUATION SUCH AS PAVEMENT BUILD–UP, WALLS, ETC. SPECIFIC CONSTRUCTION CONCERNS AND ACTUAL CONSTRUCTION MEANS AND METHODS ARE THE RESPONSIBILITY OF THE CONTRACTOR.

2. ALL GRADING OPERATIONS SHALL BE MONITORED BY A QUALIFIED GEOTECHNICAL CONSULTANT AS CHOSEN AND PAID FOR BY THE OWNER. THE CONTRACTOR SHALL BE RESPONSIBLE FOR NOTIFYING SAID CONSULTANT IN ADVANCE OF ALL REQUIRED TESTING AND SECURING COPIES OF RESULTING REPORTS.

3. THE PRACTICE OF FILLING IN LIFTS MUST BE MAINTAINED AND SHOULD BE CONDUCTED UNDER THE OBSERVATION OF THE GEOTECHNICAL ENGINEER OR HIS REPRESENTATIVE. FOR A WEATHERED ROCK MIXTURE, THE LIFT THICKNESS SHOULD BE THAT OF SOIL AND BROKEN DOWN INTO A 6 TO 8 INCH LIFT THICKNESS BY THE COMPACTOR UNDER REPEATED PASSES AS DIRECTED BY THE GEOTECHNICAL ENGINEER.

4. AFTER REMOVAL OF SLABS, PAVING, FOUNDATIONS, ETC., AREAS UNDER THE PROPOSED BUILDING, PAVING, AND IMPROVEMENTS, THE SITE SHALL BE CLEARED OF VEGETATION, ORGANICS, AND CUT TO SUBGRADE ELEVATION. THE CONTRACTOR SHALL THEN REMOVE THE HIGHLY PLASTIC CLAYS, LOW CONSISTENCY SOILS, AND OTHER UNSUITABLE SOILS WITHIN 5' OF THE BUILDING AND IMPROVEMENTS UNDER THE SUPERVISION OF THE OWNER'S GEOTECHNICAL ENGINEER. UNDERCUTTING OF LOW CONSISTENCY SOILS UNDERNEATH IMPROVEMENTS (STRUCTURE, PORCHES, PATIOS, RETAINING WALLS, ETC.) IS REQUIRED TO BE MONITORED BY THE OWNER'S GEOTECHNICAL ENGINEER.

5. REMOVAL OF ALL BURIED STRUCTURES, FOUNDATIONS, UTILITY LINES, SEPTIC TANKS, DEBRIS, ETC. UNDER THE PROPOSED IMPROVEMENTS IS REQUIRED. REPLACEMENT WITH STRUCTURAL FILL IS REQUIRED. THIS WORK SHALL BE INCLUDED IN BASE BID.

6. THE OWNER'S GEOTECHNICAL ENGINEER SHALL DIRECT ALL UNDERCUTTING IF ANY IS ADVISED ON THE PROJECT.

7. DENSITY AND MOISTURE TEST SHALL BE PERFORMED ON EACH LIFT PRIOR TO PLACEMENT OF SUBSEQUENT LIFTS AT A MINIMUM OF ONE TEST PER 5000SF IN PAVING AREAS, AND ONE TEST PER 2500SF WITH A MINIMUM OF 3 TESTS PER LIFT, OR PER THE GEOTECHNICAL ENGINEER, WHATEVER IS MORE STRINGENT. DENSITY TESTING ALONG UTILITY TRENCHES SHALL BE AT LEAST 2 TEST FOR EVERY LIFT EVERY 200 LF ALONG THE TRENCH.

8. UNSTABLE AND PUMPING SUBGRADE CONDITIONS MAY OCCUR DURING SITE PREPARATION AND UNDERCUTTING OPERATIONS. PROPER PROTECTION OF SUBGRADE, DRAINAGE AND DE–WATERING WILL BE CRITICAL TO SITE CONSTRUCTION EFFORTS. ANY DEWATERING SHALL BE INCLUDED IN THE BASE BID. IT SHALL BE THE RESPONSIBILITY OF THE CONTRACTOR TO MINIMIZE EQUIPMENT TRAFFIC ACROSS THE SITE. EVERY EFFORT SHALL BE MADE TO LOCALIZE EQUIPMENT STAGING AND TRAFFIC TO SPECIFIC AREAS AND LIMIT THE AMOUNT OF SOIL DEGRADATION FOR THE SITE. THE CONTRACTOR SHALL REFER TO A GEOTECHNICAL ENGINEER FOR FURTHER RECOMMENDATIONS.

9. ANY EXCESS EXCAVATION CREATED BY GRADING OPERATIONS SHALL BE CONSIDERED WASTE AND SHALL BE HAULED OFF AND DISPOSED OF LEGALLY AT THE CONTRACTORS EXPENSE.

10. ANY DISCREPANCIES IN THE PROPOSED WORK OR EXISTING CONDITIONS AS WELL AS QUESTIONS OR COORDINATION ITEMS SHALL BE BROUGHT TO THE ATTENTION OF THE ENGINEER AS SOON AS POSSIBLE.

11. ALL DISTURBED AREAS SHALL BE REQUIRED TO RECEIVE A 4" MIN LAYER OF TOPSOIL BEFORE FINAL SEEDING AND MULCHING OR SODDING. TOP SOILING SHALL BE INCLUDED IN BASE BID (PER PLANS) OVER ALL GRASSED OR LANDSCAPED AREAS.

ADA NOTES

1. CONTRACTOR SHALL MEET CURRENT ADA GUIDELINES FOR PARKING AND SIDEWALK SLOPES, WIDTHS, HANDRAILS, ETC.

GRADING PROCEDURE

1. REMOVE TOPSOIL, ORGANICS, DEBRIS, AND CUT TO SUBGRADE.
2. CONTACT OWNERS' GEOTECHNICAL ENGINEER FOR SUPERVISED PROOFROLL.
3. UNDERCUT AS RECOMMENDED BY GEOTECHNICAL ENGINEER.
4. MOISTURE CONDITIONING AND RECOMPACTION OF EXISTING SOILS OR REMOVAL OF SOILS AND REPLACEMENT WITH STRUCTURAL FILL MAY BE REQUIRED BY THE GEOTECHNICAL ENGINEER.

UNDERCUT NOTES

1. 450 CY OF UNDERCUT AND REPLACE WITH STRUCTURAL FILL SHALL BE INCLUDED IN THE BASE BID. REFER TO ARCHITECT IF THIS SHALL BE SET UP AS UNIT PRICE ALLOWANCE.
2. THE CONTRACTOR SHALL INCLUDE IN BASE BID A 12" DEPTH MOISTURE CONDITIONING AND RE–COMPACTING FOR ALL SOILS UNDER STRUCTURES AND PAVING.

LEGEND

555	EXISTING CONTOUR
	EXISTING STORM PIPE
	PROPOSED 18" CURB & GUTTER
555	PROPOSED MAJOR(5') CONTOUR
554	PROPOSED MINOR(1') CONTOUR
×555.00	EXISTING SPOT ELEVATION
●555.00	PROPOSED SPOT ELEVATION
	PROPOSED STORM PIPE (SCH. 40 PVC OR EQUIV.)
	STAIRS ON GRADE
L R L	RAMP W/ HANDRAILS

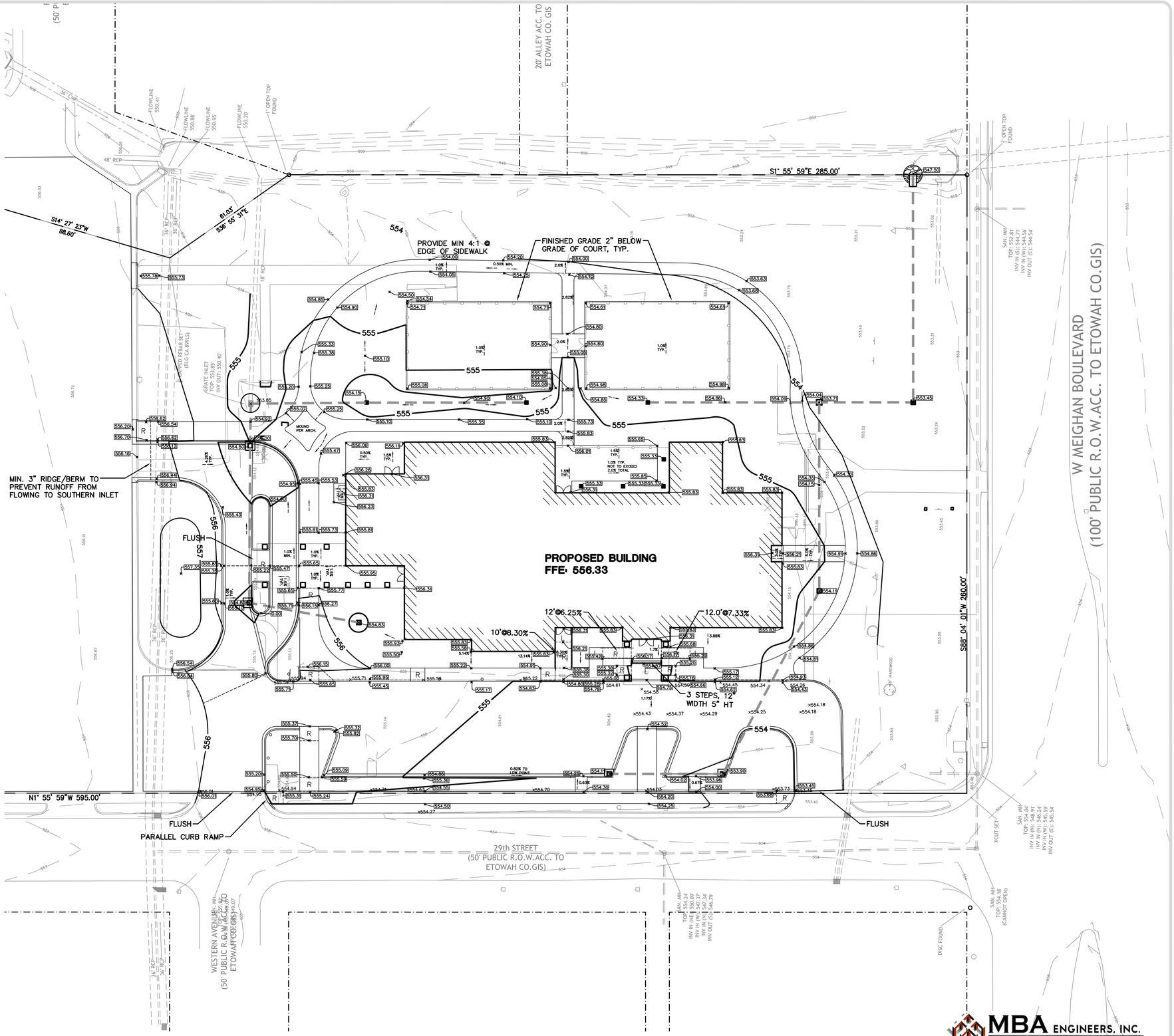

GRAPHIC SCALE

20 0 10 20 40 80

(IN FEET)
1 inch = 20 ft.

MBA ENGINEERS, INC.
STRUCTURAL CIVIL GEOTECHNICAL
300 20TH STREET NORTH, SUITE 100
BIRMINGHAM, ALABAMA 35203
P(205) 323-6385 F(205) 324-0698
TOM CALLISON, P.E. TCALLISON@MBASEI.COM

ALABAMA LICENSED 9-15-22 No. 25020 PROFESSIONAL ENGINEER THOMAS F. CALLISON

THOMAS M. McELRATH, ARCHITECT
ARCHITECTURE and SPACE PLANNING
717 MERIT SPRINGS ROAD
GADSDEN, ALABAMA 35901
PHONE: (256) 490-8244
EMAIL: TOM@TMM-ARCHITECT.COM

A NEW SENIOR WELLNESS CENTER at 2829 W. Meighan Boulevard for THE CITY of GADSDEN, ALABAMA

GRADING PLAN

CONSTRUCTION DOCUMENTS

DRAWN	MSO
CHECKED	TFC
SCALE	AS NOTED
DATE	SEPTEMBER 15, 2022
FILE	C1.0 LAYOUT.DWG
JOB NO.	22–01
REVISIONS	

SHEET C3.0 OF 01 SHEETS

DRAINAGE NOTES

1. IT IS THE CONTRACTOR'S RESPONSIBILITY TO BUILD A SITE FREE OF DRAINAGE PROBLEMS.
2. THE CONTRACTOR IS RESPONSIBLE FOR PROVIDING DRAINAGE AWAY FROM THE PROPOSED BUILDING AND COURTS. THERE SHALL BE NO PONDING OF WATER ON THE SITE UNLESS DIRECTED BY THE ENGINEER FOR EROSION AND SEDIMENT CONTROL.
3. ALL DRAINAGE STRUCTURES, INLETS BOXES, MANHOLES, ETC. SHALL BE POURED IN PLACE OR PRECAST CONCRETE. BRICK WILL ONLY BE ALLOWED TO ADJUST GRADE ON STORM & SANITARY MANHOLES, ETC. THE MAXIMUM ALLOWABLE HEIGHT OF BRICK SHALL BE 11 INCHES.
4. ALL DRAINAGE STRUCTURES, INLET BOXES, AND CATCH BASINS SHALL HAVE 2" WEEP HOLES FORMED, OR DRILLED, ON ALL SIDES WHERE DRAINAGE PIPES DO NOT CONFLICT WITH THEM. ALL WEEP HOLES SHALL HAVE GRAVEL WRAPPED WITH FILTER FABRIC AT THEIR INTERFACE WITH BACKFILL TO AID GROUNDWATER FLOW TO THE WEEP HOLE.
5. THE CONTRACTOR IS RESPONSIBLE FOR PROJECT PHASING AND SHALL PROVIDE THE NECESSARY TEMPORARY PIPE CONNECTIONS, DIVERSIONS, STUB-OUTS, CONNECTIONS, ETC. REQUIRED FOR COMPLETION OF PROJECT WORK.
6. ALL STORM PIPE UNDER PAVEMENT SHALL BE BACKFILLED FULL-DEPTH WITH CRUSHED STONE.
7. THE ROOFDRAIN LEADER COLLECTION PIPE NETWORK SHALL HAVE 4" CLEANOUTS AT THE UPSTREAM END OF THE LINES AND AT 100' MIN. SPACINGS. CONTRACTOR TO FIELD LOCATE.
8. ALL DOWNSPOUTS SHALL BE CONNECTED TO UNDERGROUND STORM SYSTEM W/ WATER-TIGHT CONNECTIONS AND STAINLESS FERNCO CONNECTIONS.

PIPE MATERIALS

1. ALL STORM PIPE IN THE PUBLIC RIGHT-OF-WAY AND PRIVATE DRIVES-ACCESS EASEMENTS SHALL BE CLASS 3 REINFORCED CONCRETE PIPE (RCP).
2. 4-12" DIAMETER STORM PIPING AND ROOF DRAIN LEADER PIPING SHALL BE PVC SCHEDULE 40 (SCH. 40), A-2000 PVC PIPE, OR SDR 35 PVC UNLESS SPECIFIED ON THE PLANS.
3. ALL STORM PIPE 15" DIAMETER AND LARGER SHALL BE N-12 HDPE DOUBLE WALL SMOOTH WALL PIPE, A-2000 PVC PIPE, OR ULTRA-FLOW ALUMINIZED STEEL PIPE, UNLESS SPECIFIED ON THE PLANS.
4. ALL AREA DRAINS IN LANDSCAPED OR NON PAVED AREAS SHALL BE PROVIDED WITH CAST-IRON REMOVABLE GRATE PROVIDED WITH AT LEAST 12" CONC. SURROUND FOR MAINTENANCE PURPOSES.

COMBINATION CURB INLET NOTES

1. COMBINATION CURB OPENING INLETS SHALL BE EJ 7035 (OR APPROVED EQUAL)

PIPE BEDDING

1. ALL STORM PIPE UNDER PAVEMENT SHALL BE BACKFILLED FULL-DEPTH WITH CRUSHED STONE.
2. PIPE BEDDING FOR STORM AND OTHER UTILITIES WITHIN 15' OF THE BUILDING SHALL BE #8910 STONE BACKFILL AND NOT 57 STONE OR OTHER MATERIAL OF HIGH PERMEABILITY.

DOWNSPOUT COLLECTION NOTES

1. ALL DOWNSPOUTS SHALL BE FITTED WITH CAST IRON DOWNSPOUT BOOTS (WITH CLEAN-OUT PLATES) THAT EXTEND BELOW FINISHED GRADE. REFER TO ARCHITECT. A MINIMUM COVER OF 8" IS REQUIRED.
2. THE ROOFDRAIN LEADER COLLECTION PIPE NETWORK SHALL HAVE 6" CLEANOUTS AT THE END OF THE LINE AND AT 150' MIN. SPACINGS. CONTRACTOR TO FIELD LOCATE. ROOFDRAIN LEADERS ARE TO BE FIT TO DOWNSPOUT SIZE. DOWNSPOUTS SHALL SLOPE WITH A 1% MINIMUM GRADE
4. THE DOWNSPOUT BOOTS (J.R.HOE OR APPROVED EQUAL) SHALL BE SIZED TO FIT THE DOWNSPOUT SIZE WITH A 6" MINIMUM DISCHARGE OPENING PER THE MANUFACTURER. THE CONTRACTOR SHALL USE A 45° TRANSITION ("A" SERIES TYPE - J.R. HOE)
5. THE CONNECTION BETWEEN THE DOWNSPOUT BOOT DISCHARGE AND THE UNDERGROUND PIPING SHALL BE MADE WITH A FLEXIBLE COUPLER WITH 316 SERIES STAINLESS HOSE CLAMPS (FERNCO OR APPROVED EQUAL) OF COMPATIBLE SIZE TO MAKE A WATERPROOF FIT.
6. CONNECTIONS BETWEEN FITTINGS SHALL BE WYES AND NOT TEE CONNECTIONS.

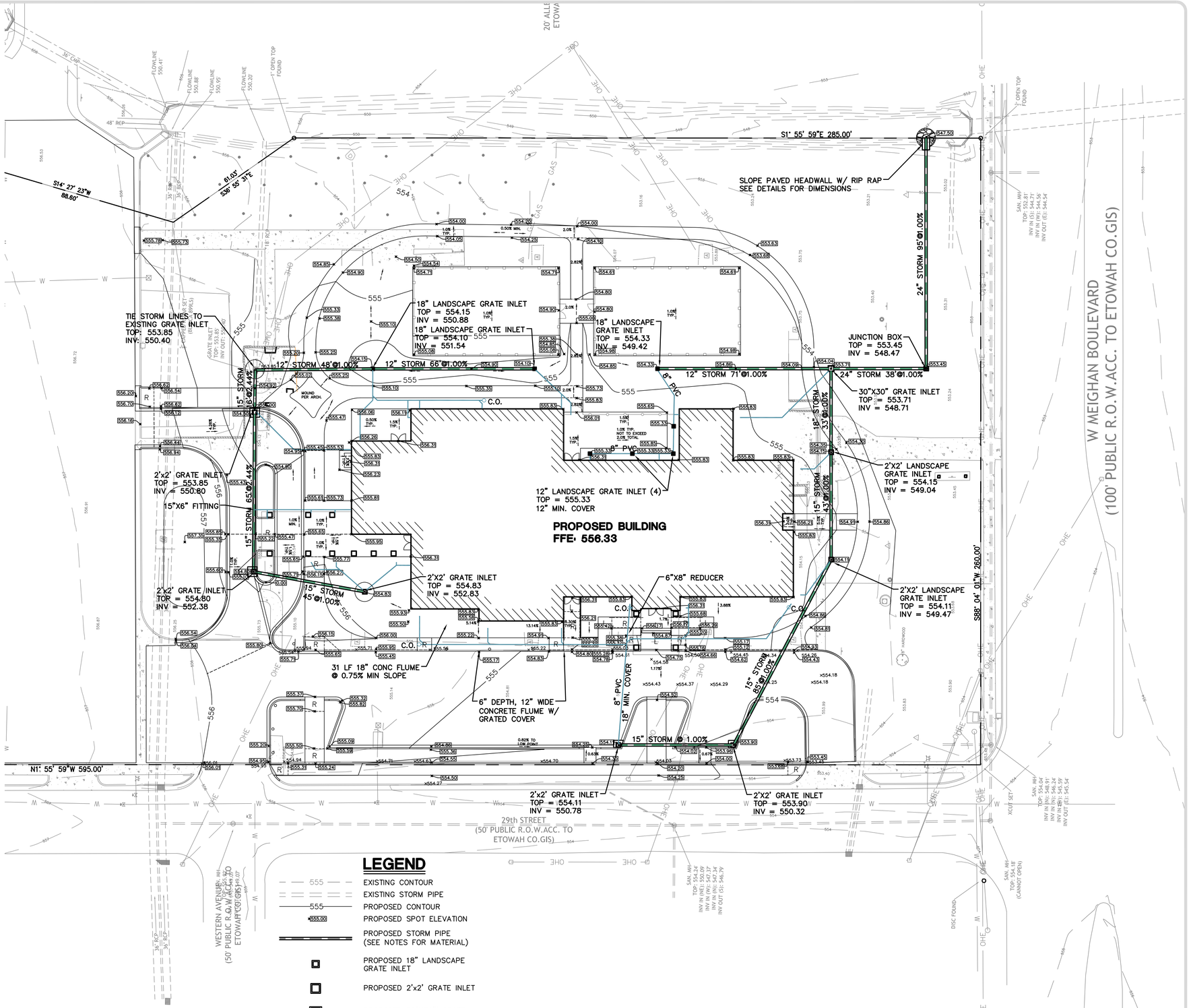

LEGEND

- EXISTING CONTOUR
- EXISTING STORM PIPE
- PROPOSED CONTOUR
- PROPOSED SPOT ELEVATION
- PROPOSED STORM PIPE (SEE NOTES FOR MATERIAL)
- PROPOSED 18" LANDSCAPE GRATE INLET
- PROPOSED 2'x2' GRATE INLET
- PROPOSED 30"X30"' GRATE INLET
- PROPOSED JUNCTION BOX W/ RING & COVER
- PROPOSED SLOPE PAVED HEADWALL W/ RIPRAP
- PROPOSED UNDERGROUND ROOF DRAINAGE ROUTING 6" MIN.

GRAPHIC SCALE

20 0 10 20 40 80

(IN FEET)
1 inch = 20 ft.

MBA ENGINEERS, INC.
STRUCTURAL CIVIL GEOTECHNICAL
300 20TH STREET NORTH, SUITE 100
BIRMINGHAM, ALABAMA 35203
P(205) 323-6385 F(205) 324-0698
TOM CALLISON, P.E. TCALLISON@MBASEI.COM

ALABAMA LICENSED 9-15-22 No. 25020 PROFESSIONAL ENGINEER THOMAS F. CALLISON

THOMAS M. McELRATH, ARCHITECT
ARCHITECTURE and SPACE PLANNING
717 MERIT SPRINGS ROAD
GADSDEN, ALABAMA 35901
PHONE: (256) 490-8244
EMAIL: TOM@TMM-ARCHITECT.COM

A NEW SENIOR WELLNESS CENTER at 2829 W. Meighan Boulevard for THE CITY of GADSDEN, ALABAMA

STORM PLAN

CONSTRUCTION DOCUMENTS

DRAWN	MSO
CHECKED	TFC
SCALE	AS NOTED
DATE	SEPTEMBER 15, 2022
FILE	C1.0 LAYOUT.DWG
JOB NO.	22-01
REVISIONS	

SHEET C4.0 OF 01 SHEETS

ALDOT GENERAL NOTES

1. ALL METERS ARE TO BE INSTALLED OFF ALDOT RIGHTS–OF–WAY.
2. ALL MANHOLES, VALVE BOXES, AND HAND HOLES SHOULD BE MOUNTED FLUSH WITH EXISTING GROUND.
3. CONTACT DISTRICT MANAGER 48 HOURS PRIOR TO BEGINNING WORK ON ALDOT RIGHT–OF WAY.
4. WRITE LETTER REQUESTING TO MEET WITH DISTRICT PERMIT COORDINATOR UPON COMPLETION OF PERMITTED WORK TO EVALUATE PUNCH LIST FOR COMPLETION OF PROJECT.
5. ALL TRAFFIC CONTROL SHALL BE IN ACCORDANCE WITH PART 6 OF THE MANUAL ON UNIFORM TRAFFIC CONTROL DEVICES (MUTCD) LATEST EDITION.
6. THE ALDOT DISTRICT OFFICE IN GADSDEN, AL MUST BE NOTIFIED AT (256) 546–4671 IMMEDIATELY UPON A LANE CLOSURE BEGINNING AND ENDING.
7. ONSITE REPRESENTATIVE WILL HAVE ON HAND, AT ALL TIMES: (1) APPROVED PERMIT AND PLANS STAMPED BY THE DIVSION ENGINEER, (2) TRAFFIC CONTROL PLAN, (3) EROSION CONTROL PLAN
8. ALL DISTURBED AREAS SHALL BE RESODDED OR SEEDED AS DIRECTED BY THE DEPARTMENT OF TRANSPORTATION'S DISTRICT MANAGER.
9. ALL PERMITTED WORK WILL MEET OR EXCEED ALDOT SPECIFICATIONS.
10. ALL WORK IN THE RIGHT–OF–WAY MUST BE PER THE ALDOT STANDARD SPECIFICATION MANUAL. REFERENCE ALL APPLICABLE ALDOT SPECIAL & STANDARD DRAWINGS.

UTILITY NOTES

1. ALL WORK NEAR OVERHEAD POWER LINES, UNDERGROUND TRANSMISSION LINES, SERVICES, ETC. SHALL COMPLY WITH ALABAMA POWER REQUIREMENTS AND SPECIFICATIONS. IN NO CASES SHALL THE CONTRACTOR ATTEMPT TO EXCAVATE OR MOVE UNDERGROUND POWER WITHOUT PRIOR APPROVAL FROM ALABAMA POWER.
2. WORK, SCHEDULING, PERMITTING, AND FEES FOR RELOCATION OF ALABAMA POWER INFRASTRUCTURE IS THE RESPONSIBILITY OF THE CONTRACTOR.
3. ALL WORK TO THE NATURAL GAS SYSTEM MUST COMPLY AND BE COORDINATED WITH SPIRE ENERGY.
4. THERE IS A REQUIRED 12" MINIMUM SEPARATION BETWEEN CROSSING UTILITIES UNLESS OTHERWISE SHOWN ON PLANS.
5. CONTRACTOR RESPONSIBLE FOR COORDINATING ALL WORK NEAR OR ON POWER UTILITY POLES/GUYS.
6. ALL WORK TO DOMESTIC WATER SYSTEM AND SEWER SYSTEM MUST COMPLY AND BE COORDINATED WITH THE GADSDEN WATER WORKS AND SEWER BOARD (GWWSB). CONTRACTOR REQUIRED TO NOTIFY GWWSB.
7. PRIOR TO WORK, CONTRACTOR MUST COORDINATE WITH CITY OF GADSDEN OR ANY OTHER REQUIRED AGENCIES TO LOCATE/RELOCATE UNDERGROUND UTILITIES.
8. CONTRACTOR IS REQUIRED TO PROVIDE ADEQUATE COVER FOR UNDERGROUND UTILITIES. 36" MINIMUM FOR SANITARY SEWER, 24" FOR STORM SEWER, ETC.
9. REFER TO ELECTRICAL ENGINEER FOR NEW POWER ROUTING AND REMOVAL OF EXISTING OVERHEAD AND UNDERGROUND POWER.

GWWSB NOTES

1. ALL WORK TO THE WATER SYSTEM AND SANITARY SEWER SYSTEM SHALL COMPLY WITH THE GADSDEN WATER WORKS AND SEWER BOARD (GWWSB) STANDARDS & SPECIFICATIONS.
2. IF SERVICES ARE DETERMINED NOT TO BE NEEDED BY THE GWWSB OR OWNER OF PROPERTY SERVED, THE CONTRACTOR IS REQUIRED TO KILL THE SERVICE AT THE MAIN PER GWWSB. THIS SHALL BE AT THE CONTRACTOR'S EXPENSE AND NOT SUBJECT TO ADDITIONAL PAYMENT BY THE OWNER.
3. TAP, WATER METER, AND BACKFLOW PREVENTER SHALL BE PROVIDED BY GWWSB. GWWSB FEES TO BE PAID BY THE CONTRACTOR SHALL COVER THIS WORK. THE CONTRACTOR SHALL COORDINATE AND ASSIST THE GWWSB AS REQUIRED FOR THIS WORK.
4. CONTRACTOR REQUIRED TO GET ALL REQUIRED SEWER PERMITS FROM GWWSB PERMITS INCLUDING BUT NOT LIMITED TO SEWER CONNECTION PERMITS AND SEWER IMPACT PERMITS.
5. THE CONTRACTOR SHALL NOTIFY GWWSB PRIOR TO ANY WORK TO THE SANITARY SEWER SYSTEM. ALL SANITARY SEWER WORK IS REQUIRED TO BE INSPECTED AND APPROVED BY GWWSB.

UTILITY CONTACTS

GADSDEN WATER WORKS AND SEWER BOARD – BRIAN PURSELL – C:(256) 399–8702
O:(256) 543–2884

LEGEND

	PROPERTY LINE
GAS GAS	EXISTING GAS
SS	EXISTING SANITARY SEWER
W	EXISTING WATER
OHE	EXISTING OVERHEAD POWER
UP	EXISTING UNDERGROUND POWER
T	EXISTING TELECOMMUNICATIONS
	EXISTING STORM PIPE
GAS GAS	PROPOSED GAS
SS	PROPOSED 4" SCH. 40 PVC SANITARY SEWER LATERAL
C.O. SS	PROPOSED SSWR CLEANOUT
W	PROPOSED WATER (30" MIN. COVER)
FW FW	PROPOSED 6" FIRE WATER MAIN (36" MIN. COVER)
UP	PROPOSED UNDERGROUND POWER

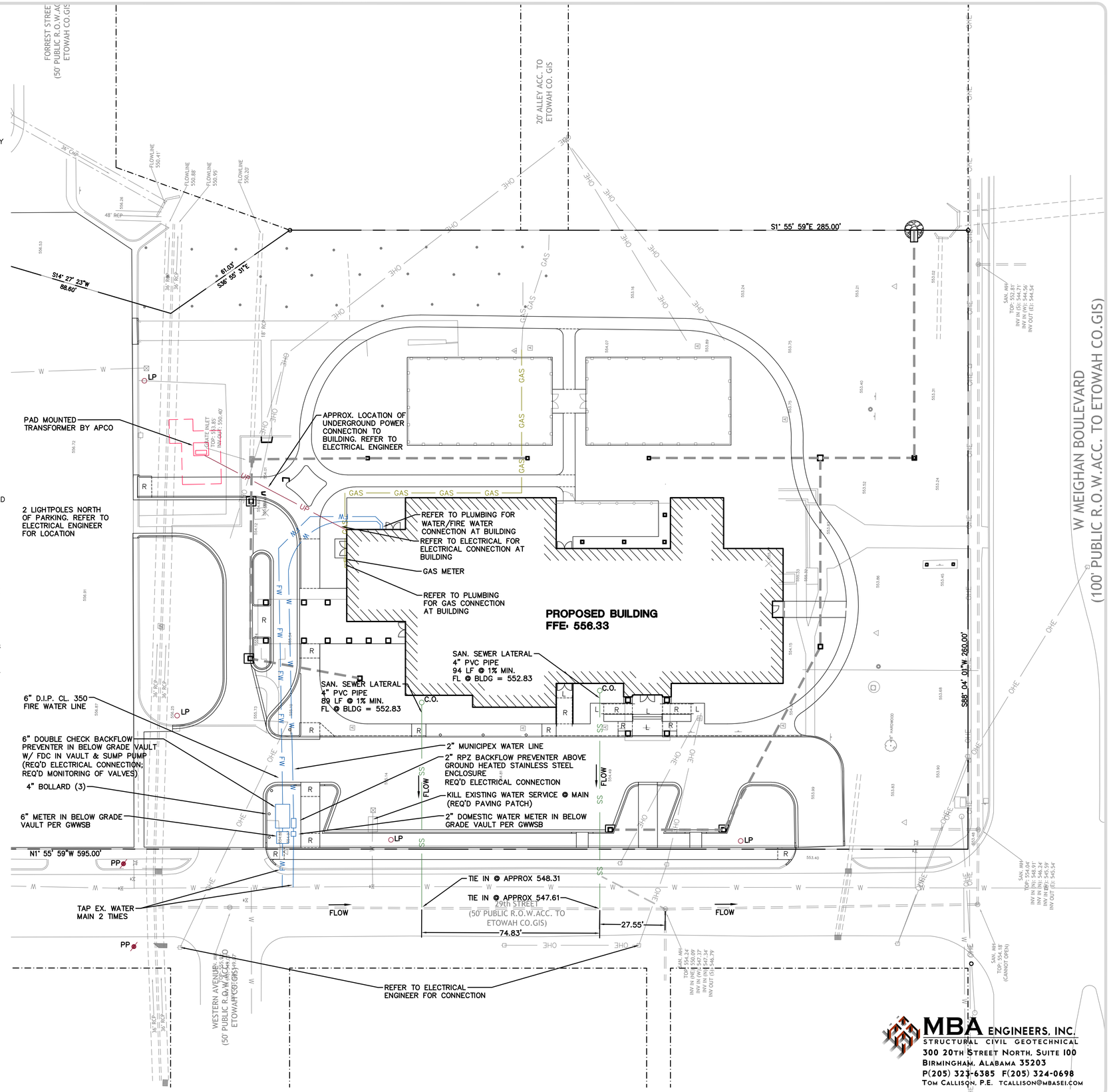

GRAPHIC SCALE

20 0 10 20 40 80

(IN FEET)
1 inch = 20 ft.

MBA ENGINEERS, INC.
STRUCTURAL CIVIL GEOTECHNICAL
300 20TH STREET NORTH, SUITE 100
BIRMINGHAM, ALABAMA 35203
P(205) 323-6385 F(205) 324-0698
TOM CALLISON, P.E. TCALLISON@MBASEI.COM

ALABAMA LICENSED 9-15-22 No. 25020 PROFESSIONAL ENGINEER THOMAS F. CALLISON

THOMAS M. McELRATH, ARCHITECT
ARCHITECTURE and SPACE PLANNING
717 MERIT SPRINGS ROAD
GADSDEN, ALABAMA 35901
PHONE: (256) 490-8244
EMAIL: TOM@TMM-ARCHITECT.COM

A NEW SENIOR WELLNESS CENTER
at
2829 W. Meighan Boulevard
for
THE CITY of GADSDEN, ALABAMA

UTILITY PLAN

CONSTRUCTION DOCUMENTS

DRAWN	MSO
CHECKED	TFC
SCALE	AS NOTED
DATE	SEPTEMBER 15, 2022
FILE	C1.0 LAYOUT.DWG
JOB NO.	22–01
REVISIONS	

SHEET **C5.0** OF 01 SHEETS

EROSION CONTROL GENERAL NOTES

1. THE BEST MANAGEMENT PRACTICES (BMP) SHOWN ON THIS PLAN SHALL BE IMPLEMENTED AND MAINTAINED DURING THE COURSE OF THIS WORK AND UNTIL DISTURBED AREAS ARE EITHER VEGETATED OR STABILIZED AGAINST EROSION. ADEQUATE PROTECTIVE MEASURES SHALL BE PROVIDED FOR THE CONTAINMENT OF HAZARDOUS SUBSTANCES AND ANY OTHER MATERIALS WHICH MAY POLLUTE STORM WATER RUNOFF, INCLUDING PETROLEUM PRODUCTS, LUBRICANTS, AND PAINT. THE CONTRACTOR SHALL PROVIDE A COMMERCIAL DUMPSTER SERVICE FOR THE COLLECTION, REMOVAL AND DISPOSAL OF SUCH MATERIALS FROM SITE.

2. THERE SHALL BE NO DISTINCTLY VISIBLE FLOATING SCUM, OIL OR OTHER MATTER CONTAINED IN THE STORM WATER DISCHARGE. THE STORM WATER DISCHARGE MUST NOT CAUSE AN UNNATURAL COLOR OR ODOR IN THE COMMUNITY WATERS AND MUST NOT CONTRIBUTE ANY MATERIALS IN CONCENTRATIONS SUFFICIENT TO BE HAZARDOUS OR OTHERWISE DETRIMENTAL TO HUMANS, LIVESTOCK, WILDLIFE, PLANT LIFE, OR FISH AND AQUATIC LIFE IN THE COMMUNITY WATERS.

3. CONTRACTOR SHALL NOTE THE REQUIREMENTS OF THE BEST MANAGEMENT PLAN (BMP) DETAILS NOTED ON THIS PLAN AND IN THE ALABAMA HANDBOOK FOR EROSION CONTROL, SEDIMENT CONTROL, AND STORMWATER MANAGEMENT ON CONSTRUCTION SITES AND URBAN AREAS, LATEST EDITION.

4. CONTRACTOR NEEDS TO HAVE A CLEAR DIRECTION AS TO WHAT NEEDS TO BE ACCOMPLISHED BY EROSION CONTROL PLAN AND HOW IT SHALL BE MAINTAINED TO FUNCTION AT ALL TIMES FOR THE DURATION OF CONSTRUCTION ACTIVITIES. FAILURE OF THE CONTRACTOR TO WORK DOES NOT RELIEVE THE OWNER OF HIS/HER RESPONSIBILITY FOR COMPLIANCE.

5. CONTRACTOR SHALL INSTALL THE PERIMETER SEDIMENT BARRIERS BEFORE COMMENCING ANY DISTURBANCE ACTIVITIES.

6. THE CONTRACTOR SHALL PREVENT TRACKING OF SEDIMENT ONTO STREETS AND SURROUNDING PAVEMENTS. CLEAN UP IS REQUIRED DAILY. CONTRACTOR SHALL ALSO INSTALL CONSTRUCTION GRAVEL EXIT PADS OR CLEAN EQUIPMENT EACH TIME PRIOR TO LEAVING THE SITE.

7. THE CONTRACTOR IS RESPONSIBLE FOR KEEPING SITE FREE FROM TRASH AND OTHER DEBRIS BY ESTABLISHING TRASH COLLECTION AREAS AND PROPERLY MAINTAINING THEM.

8. THE CONTRACTOR SHALL INCLUDE IN HIS BID TO OWNER ALL EROSION CONTROL ITEMS NECESSARY TO PROTECT THE SITE DURING CONSTRUCTION AND PERMANENTLY RE–ESTABLISH VEGETATION ON ALL DISTURBED AREAS OF THE SITE. INCLUDING BUT NOT LIMITED TO TEMPORARY MULCHING, SLOPE PROTECTION, DITCH LINING, REPAIR/MAINTENANCE, AND INSPECTIONS.

9. WHEN NOTICEABLE OR EXCESSIVE DUST IS PRESENT DURING EARTHWORK ACTIVITIES, THE CONTRACTOR SHALL USE WATER APPLIED BY WATER TRUCKS OR OTHER METHODS, TO LIMIT THE LOSS OF SOIL BY WIND EROSION.

EROSION CONTROL NOTES

1. MORE THAN 1 ACRE WILL BE DISTURBED WITH THIS PROJECT SO AN ADEM PERMIT IS REQUIRED. IT IS THE CONTRACTORS RESPONSIBILITY TO ATTAIN AND PAY FOR THISPERMIT AND TO PROVIDE ALL REQUIREMENTS REQUIRED BY ADEM. SUCH AS INSPECTIONS, RECORD KEEPING, SIGNAGE, RAINFALL MONITORING, ETC.

2. SOLID SOD OR LANDSCAPING / MULCHING IS REQUIRED ON ALL DISTURBED AREAS.

3. A MINIMUM OF 4" OF TOPSOIL (AND FERTILIZING) IS REQUIRED FOR ALL DISTURBED AREAS TO RECEIVE SODDING, PERMANENT MULCHING, OR LANDSCAPING.

4. THE CONTRACTOR IS RESPONSIBLE FOR CONTROLLING EROSION AND STABILIZING ALL DISTURBED AREAS ON SITE, SEE LANDSCAPE PLAN FOR DETAILS OF ALL LANDSCAPED AREAS AND FINAL COVER.

5. PLASTIC SHEETING OR TEMPORARY MULCHING IS REQUIRED TO COVER ALL STOCKPILES THAT WILL REMAIN FOR 3 DAYS OR MORE. ALL STOCKPILES TO REMAIN FOR 3 DAYS OR MORE SHALL BE SURROUNDED WITH A SEDIMENT BARRIER (TYPE "A" SILT FENCE OR A 20" WATTLE.

6. TEMPORARY MULCHING IS REQUIRED FOR ALL DISTURBED AREAS NOT IN AN ACTIVE WORK AREA (DISTURBED AREAS WHERE ACTIVE GRADING OR WORK IS NOT PERFORMED WITHIN 13 DAYS, MINIMUM).

7. ALL CONSTRUCTION SEQUENCING AND TECHNIQUES CANNOT BE ANTICIPATED BY THE ENGINEER, SO THERE MAY BE ADDITIONAL BMP MEASURES THAT WILL BE NEEDED TO SUFFICIENTLY PROTECT THE SITE FROM EROSION AND SEDIMENT TRANSPORT OFF SITE. IT IS THE CONTRACTOR'S RESPONSIBILITY TO LOCATE AND CONSTRUCT THESE BMP'S AND ACCOUNT FOR ALL SCENARIOS AND ACCOUNT FOR ALL BMP'S SHOWN OR OTHERWISE NEEDED IN BASE BID PRICE FOR PROJECT. BMP'S SHOWN ARE THE ENGINEERS ESTIMATE OF THE MINIMUM AMOUNT NEEDED. THE CONTRACTOR SHALL NOT BE PAID ADDITIONALLY FOR ADDITIONAL BMP'S, INCLUDING TEMPORARY MULCHING OR FOR BMP MAINTENANCE, REPLACEMENT OR REMOVAL.

LANDSCAPING NOTES

1. ALL DISTURBED AREA WITHIN 25' OF THE BUILDING SHALL BE PROVIDED WITH SOLID SOD, OR LANDSCAPING AND PINE STRAW MULCH.

2. SOD SHALL BE BERMUDA OR ZOYSIA (PER THE ARCHITECT)

3. FOR ALL AREAS OUTSIDE 25' FROM THE BUILDING A 16" MINIMUM STRIP OF SOLID SOD IS REQUIRED ABUTTING ALL PAVED SURFACES AND OTHER FEATURES.

4. FERTILIZING IS REQUIRED

5. ALL OTHER AREAS SHALL RECEIVE SEEDING AND MULCHING SOD SHALL BE BERMUDA OR ZOYSIA (PER THE ARCHITECT)

6. REFER TO ARCHITECT FOR ALL LANDSCAPE AND PLANTING AREAS

SIGNAGE NOTES

1. ALL SIGNAGE SHALL COMPLY W/ CITY OF GADSDEN & THE MUTCD LATEST EDITION.

2. ALL PAVEMENT MARKINGS AND SIGNS SHALL BE PER ALDOT SPECIAL & STANDARD HIGHWAY DRAWINGS SPECIFICATIONS.

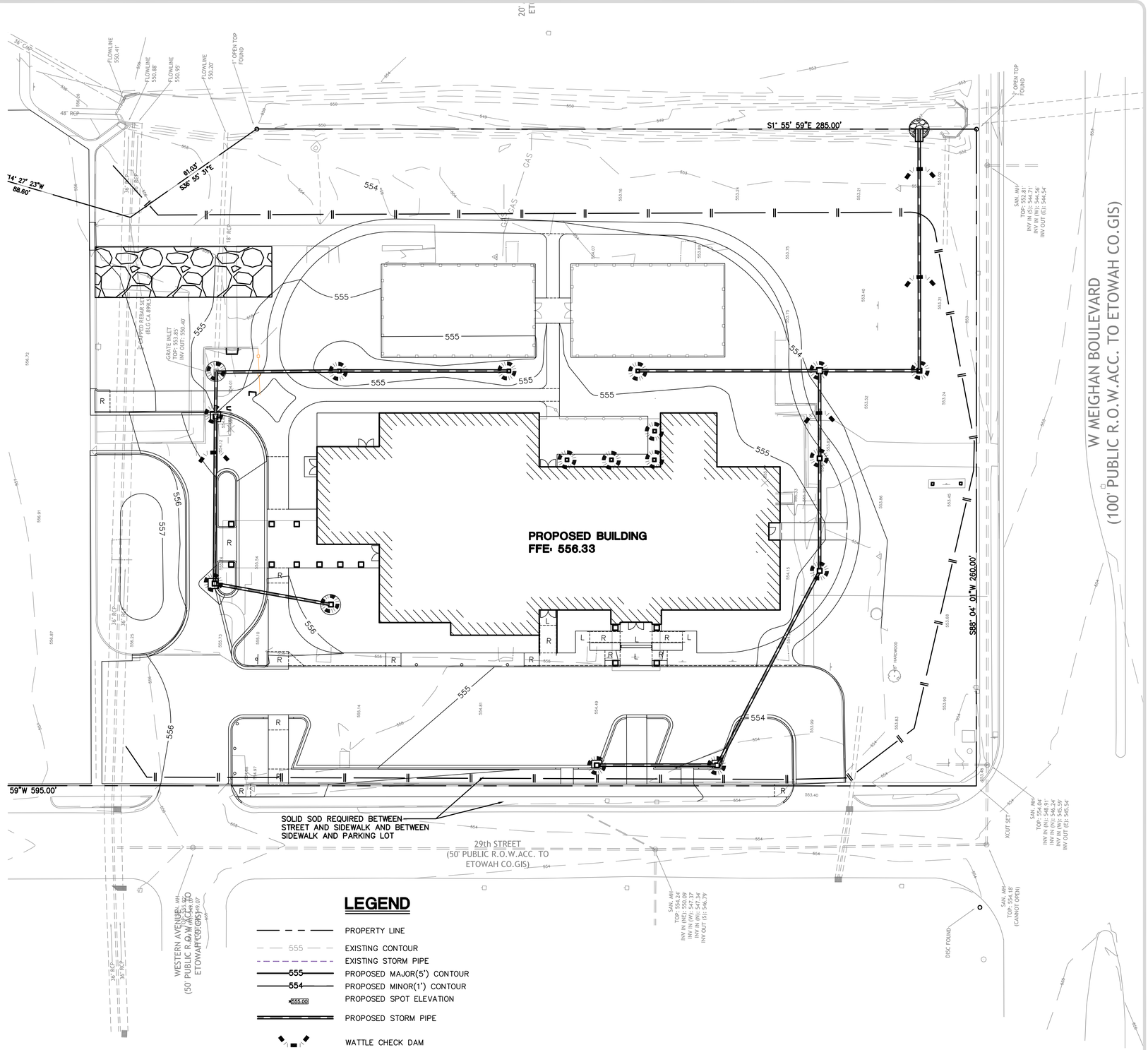

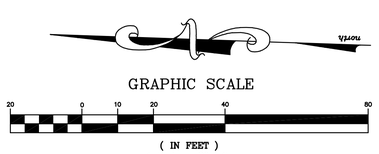

MBA ENGINEERS, INC.
STRUCTURAL CIVIL GEOTECHNICAL
300 20TH STREET NORTH, SUITE 100
BIRMINGHAM, ALABAMA 35203
P(205) 323-6385 F(205) 324-0698
TOM CALLISON, P.E. TCALLISON@MBASEI.COM

ALABAMA LICENSED 9-15-22 No. 25020 PROFESSIONAL ENGINEER THOMAS F. CALLISON

THOMAS M. McELRATH, ARCHITECT
ARCHITECTURE and SPACE PLANNING
717 MERIT SPRINGS ROAD
GADSDEN, ALABAMA 35901
PHONE: (256) 490-8244
EMAIL: TOM@TMM-ARCHITECT.COM

A NEW SENIOR WELLNESS CENTER
at
2829 W. Meighan Boulevard
for
THE CITY of GADSDEN, ALABAMA

EROSION CONTROL PLAN

CONSTRUCTION DOCUMENTS

DRAWN	MSO
CHECKED	TFC
SCALE	AS NOTED
DATE	SEPTEMBER 15, 2022
FILE	C1.0 LAYOUT.DWG
JOB NO.	22–01
REVISIONS	

SHEET C6.0 OF 01 SHEETS

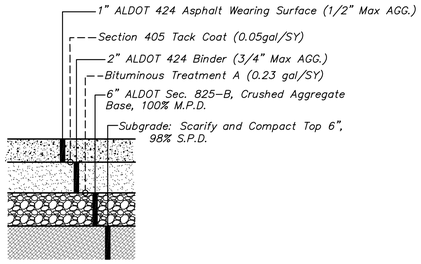

TYPICAL SECTION
STANDARD DUTY ASPHALT PAVEMENT

N.T.S.

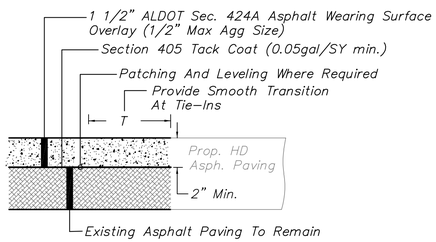

ASPHALT OVERLAY TYPICAL SECTION

N.T.S.

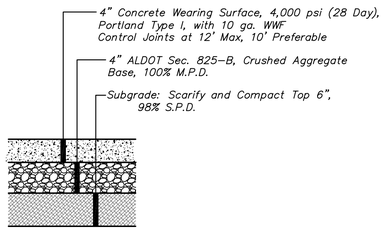

TYPICAL SECTION
STANDARD DUTY CONCRETE PAVEMENT

N.T.S.

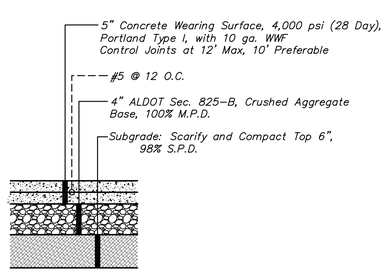

TYPICAL SECTION
REINFORCED CONCRETE PAVEMENT

N.T.S.

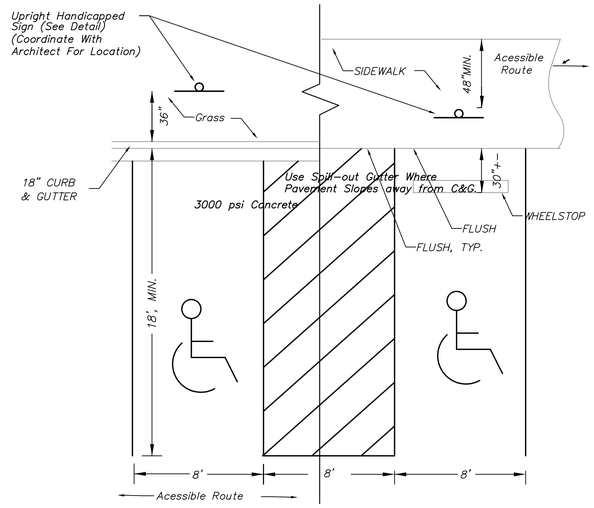

Note: 4" Wide Blue Paint Striping
For Angled Parking, Spaces Shall Be Delineated As Shown On The Site Plan.

Plan View

ADA ACCESSIBLE PARKING DETAIL

N.T.S.

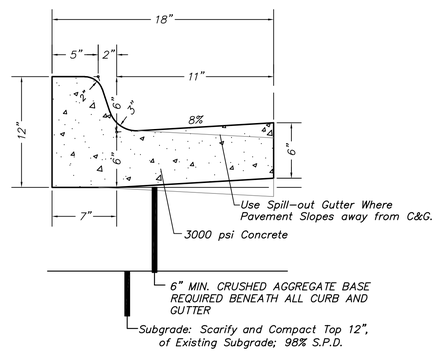

Note: Control Joints @ 10' Max.
Expansion Joints @ 50' Max.

18" CURB AND GUTTER SECTION

N.T.S.

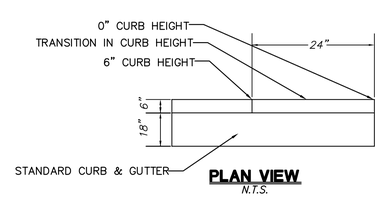

PLAN VIEW
N.T.S.

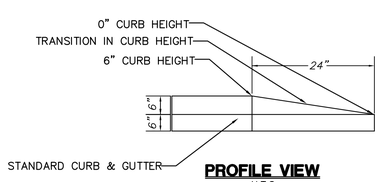

PROFILE VIEW
N.T.S.

CURB TERMINATION DETAIL

N.T.S.

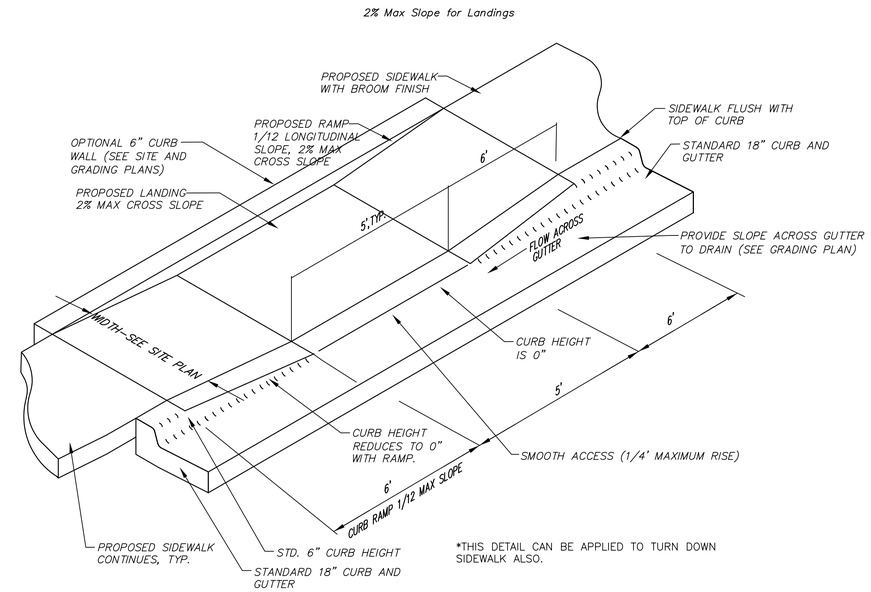

*THIS DETAIL CAN BE APPLIED TO TURN DOWN SIDEWALK ALSO.

IN-LINE HANDICAP CURB RAMP DETAIL

N.T.S.

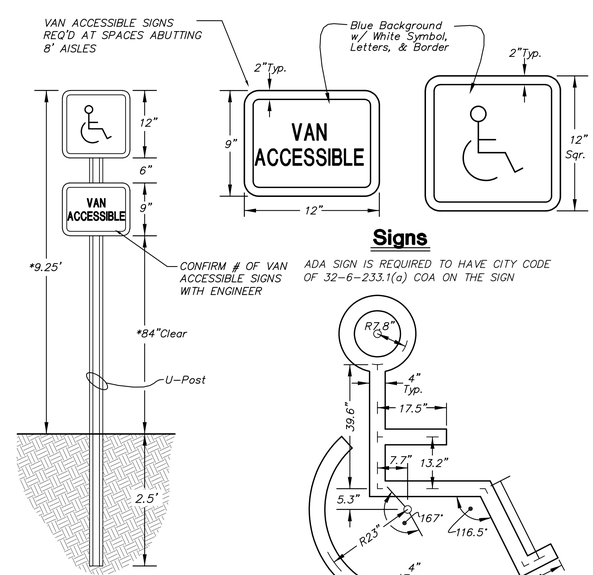

Signs

ADA SIGN IS REQUIRED TO HAVE CITY CODE OF 32-6-233.1(a) COA ON THE SIGN

Upright Sign

(OPTION TO MOUNT @ BLDG PER ARCHITECT)

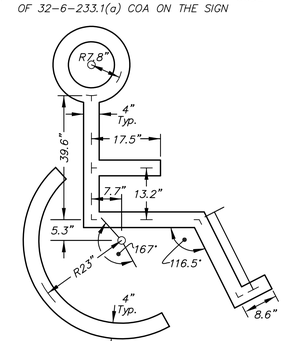

Painted Symbol Detail

*Maximum Cross Slope In HC Parking, Ramp, And Sidewalk for Routing is 1:50
*5% Max Slope For Accessible Route

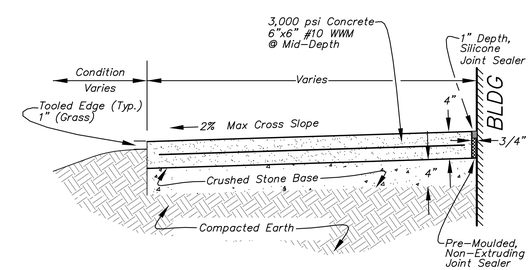

Notes:
1. Control Joints @ 8' Max.
2. Expansion Joints @ 48' Max. and Where Concrete Abuts Rigid Objects and Existing Conc.
2. Architect to Review and Approve Joint Sealer Prior to Construction
3. Refer to Architect for Details of Joint/Joint Sealer at Building.

CONCRETE SIDEWALK TYPICAL SECTION

N.T.S.

MBA ENGINEERS, INC.
STRUCTURAL CIVIL GEOTECHNICAL
300 20TH STREET NORTH, SUITE 100
BIRMINGHAM, ALABAMA 35203
P(205) 323-6385 F(205) 324-0698
TOM CALLISON, P.E. TCALLISON@MBASEI.COM

ALABAMA LICENSED 9-15-22 No. 25020 PROFESSIONAL ENGINEER THOMAS F. CALLISON

THOMAS M. McELRATH, ARCHITECT
ARCHITECTURE and SPACE PLANNING
717 MERIT SPRINGS ROAD
GADSDEN, ALABAMA 35901
PHONE: (256) 490-8244
EMAIL: TOM@TMM-ARCHITECT.COM

A NEW SENIOR WELLNESS CENTER
at
2829 W. Meighan Boulevard
for
THE CITY of GADSDEN, ALABAMA

DETAILS

CONSTRUCTION DOCUMENTS

DRAWN	MSO
CHECKED	TFC
SCALE	AS NOTED
DATE	SEPTEMBER 15, 2022
FILE	C7.0 DETAILS.DWG
JOB NO.	22-01
REVISIONS	

SHEET C7.0 OF 01 SHEETS

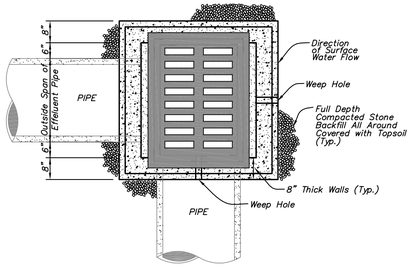

PLAN

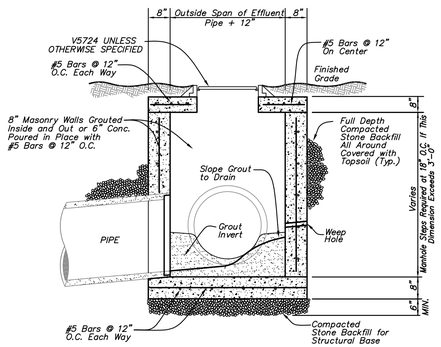

TYPICAL SECTION

STANDARD FLAT GRATE INLET DETAIL

N.T.S.

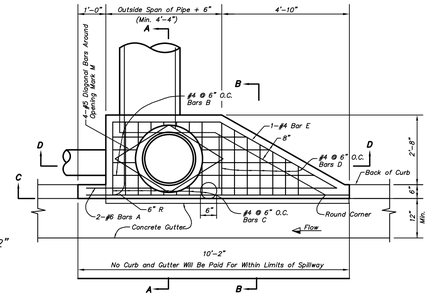

Plan – Type "A"

N.T.S.

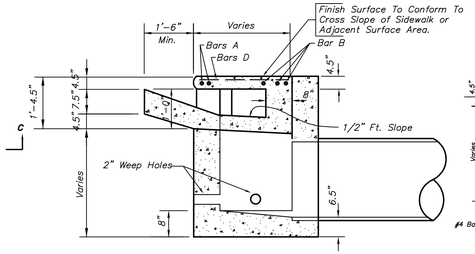

Section B–B Type "A"

N.T.S.

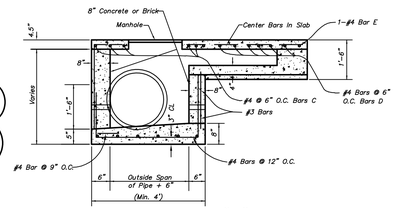

Section D–D Type "A"

N.T.S.

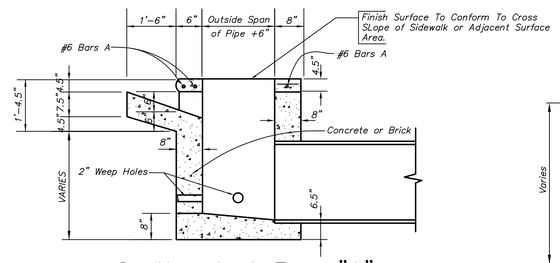

Section A–A Type "A"

N.T.S.

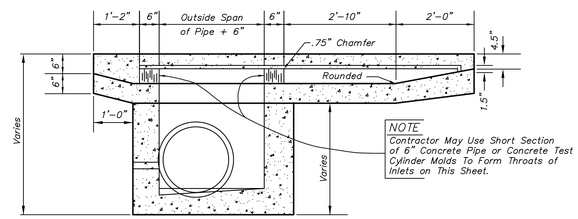

Section C–C Type "A"

N.T.S.

*FOR DOUBLE WING INLET, TOP SLAB FOR WING SIDE TO BE MIRRORED, USED FOR BOTH SIDES.

WING INLET DETAIL

N.T.S.

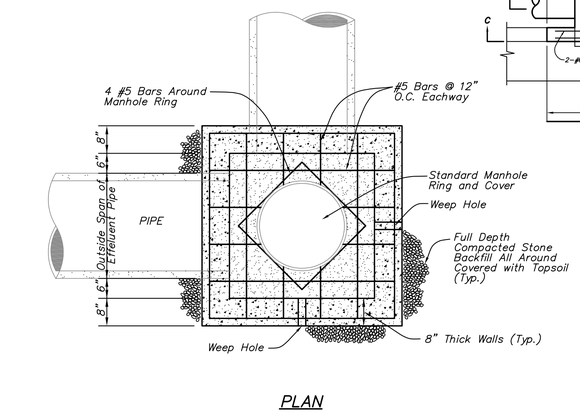

PLAN

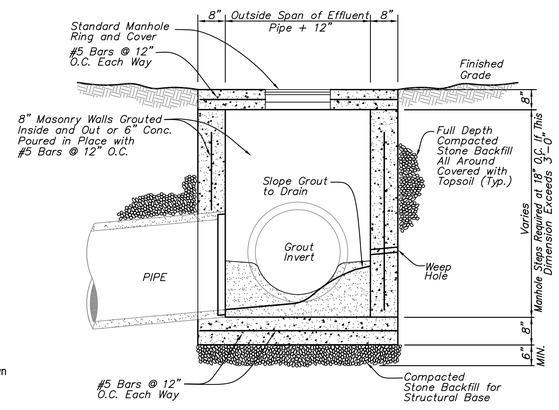

TYPICAL SECTION

STANDARD JUNCTION BOX DETAIL

N.T.S.

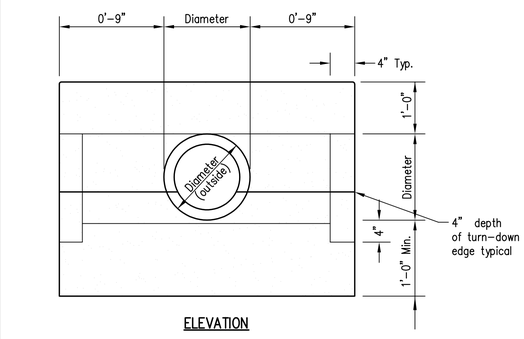

ELEVATION

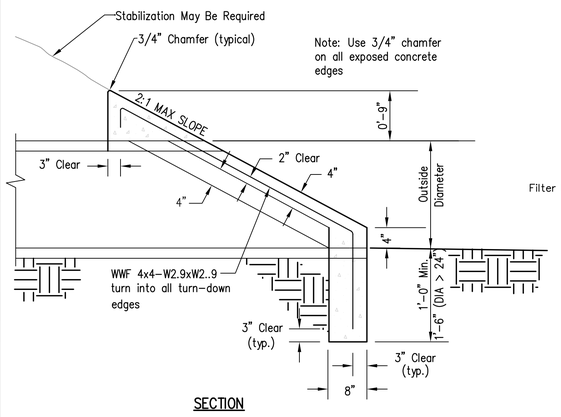

SECTION

CONCRETE SLOPED PAVED HEADWALL WITH SINGLE PIPE

N.T.S.

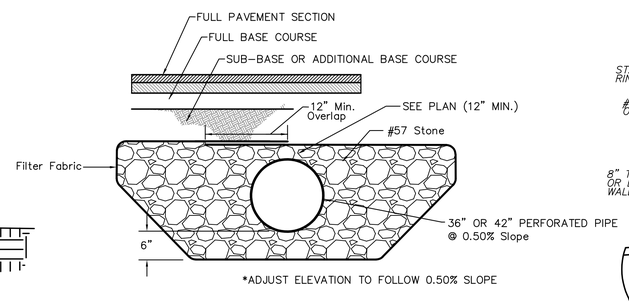

***NOTE: Provide 0.50% Slope; SEE PLAN FOR LENGTH

GENERAL GRAVEL BED DETAIL

N.T.S.

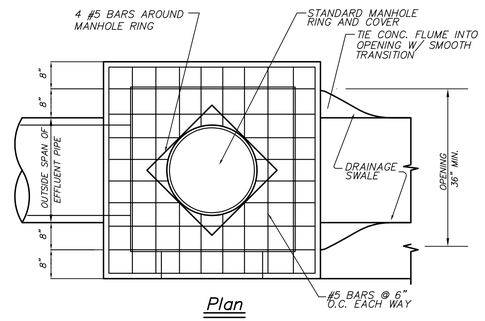

Plan

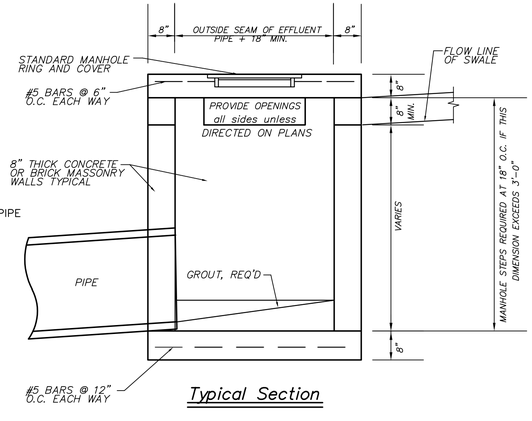

Typical Section

OPEN THROAT INLET DETAIL

N.T.S.

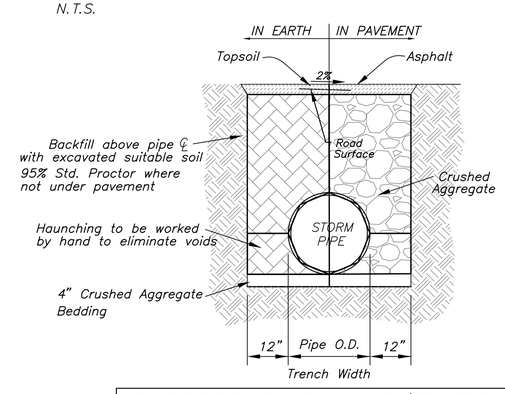

FOR LAYING CMP, PVC, OR HPDE PIPE IN EARTH (NOT UNDER PAVEMENT), IT IS REQUIRED TO HAVE 4" GRAVEL BEDDING, GRAVEL HAUNCHING, AND BACKFILL 6" OVER PIPE BEFORE BACKFILLING WITH NATIVE SOIL. ALL BEDDING MUST COMPLY W/ MANUFACTURER'S RECOMMENDATIONS.

STORM PIPE BEDDING DETAIL

N.T.S.

MBA ENGINEERS, INC.
STRUCTURAL CIVIL GEOTECHNICAL
300 20TH STREET NORTH, SUITE 100
BIRMINGHAM, ALABAMA 35203
P(205) 323-6385 F(205) 324-0698
TOM CALLISON, P.E. TCALLISON@MBASEI.COM

ALABAMA LICENSED 9-15-22 No. 25020 PROFESSIONAL ENGINEER THOMAS F. CALLISON

THOMAS M. McELRATH, ARCHITECT
ARCHITECTURE and SPACE PLANNING
717 MERIT SPRINGS ROAD
GADSDEN, ALABAMA 35901
PHONE: (256) 490-8244
EMAIL: TOM@TMM-ARCHITECT.COM

A NEW SENIOR WELLNESS CENTER
at
2829 W. Meighan Boulevard
for
THE CITY of GADSDEN, ALABAMA

DETAILS

CONSTRUCTION DOCUMENTS

DRAWN	MSO
CHECKED	TFC
SCALE	AS NOTED
DATE	SEPTEMBER 15, 2022
FILE	C7.0 DETAILS.DWG
JOB NO.	22–01
REVISIONS	

SHEET C7.1 OF 01 SHEETS

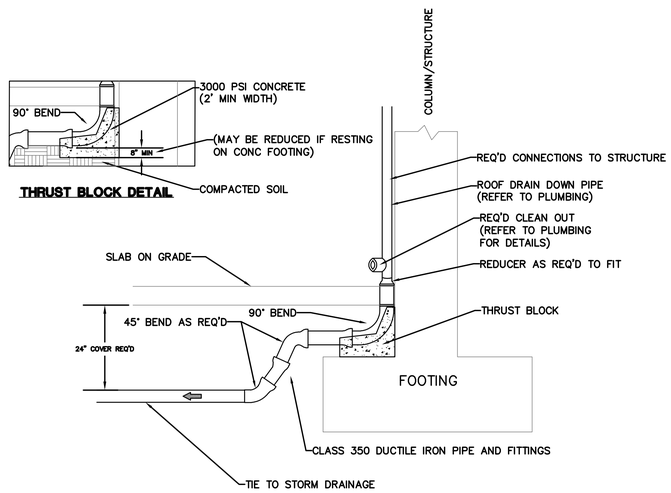

NOTES:
1. ALL ROOF DRAIN LEADERS AND COLLECTOR PIPE TO BE CLASS 350 DUCTILE IRON PIPE.
2. ALL CONNECTIONS TO BE WATER-TIGHT.
3. SIZES SHALL BE AS SHOWN ON CIVIL PLANS. IN NO CASE SHALL SIZE BE SMALLER THAN SIZE OF PLUMBING DOWN PIPE
4. MIN SLOPE 1%
5. 24" MIN COVER
6. BACKFILL SHALL BE FULL DEPTH CRUSHED STONE UNDER PAVING

ROOF DRAIN LEADER / COLLECTOR PIPE DETAIL

N.T.S.

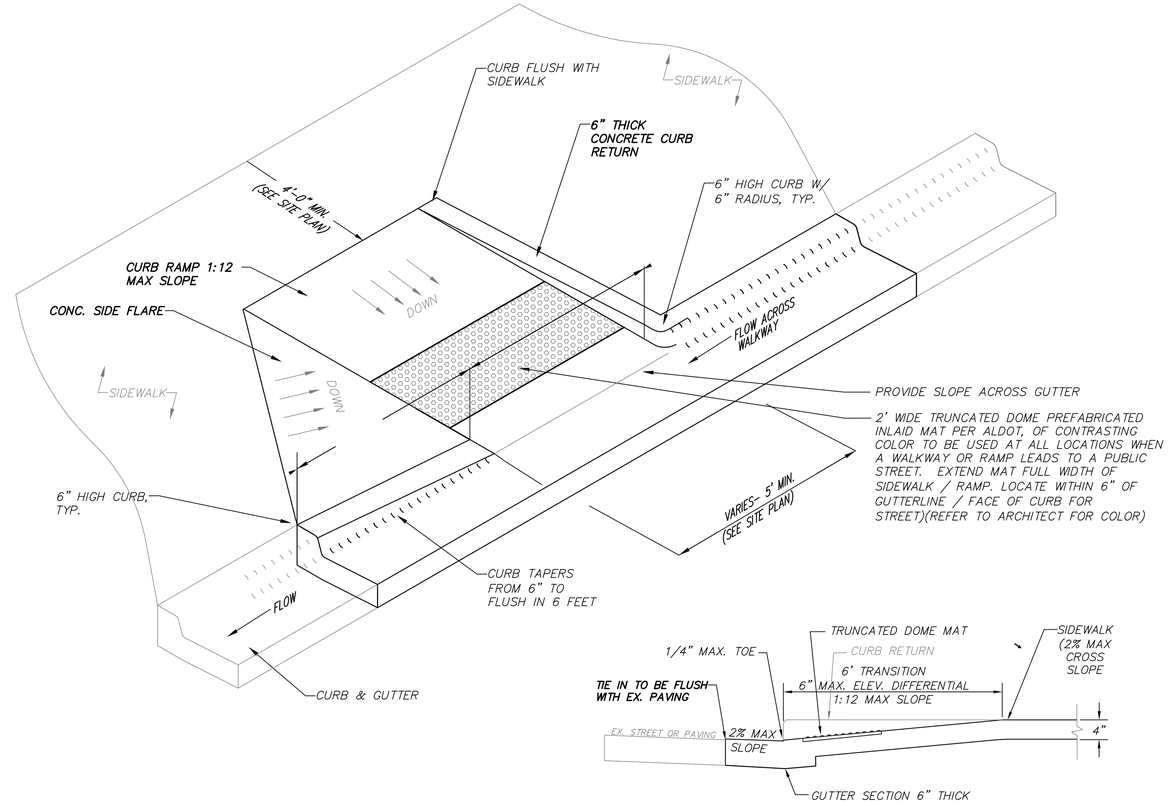

TYPE A RAMP DETAILS

N.T.S.

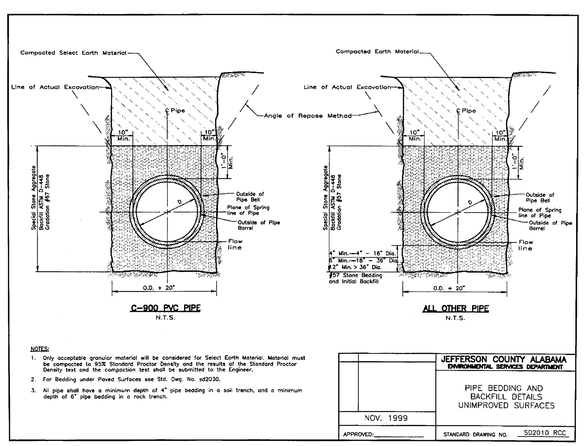

NOTES:
1. Only acceptable granular material will be considered for Select Earth Material. Material must be compacted to 95% Standard Proctor Density and the results of the Standard Proctor Density test and the compaction test shall be submitted to the Engineer.
2. For Bedding under Paved Surfaces see Std. Dwg. No. sd2030.
3. All pipe shall have a minimum depth of 4" pipe bedding in a soil trench, and a minimum depth of 6" pipe bedding in a rock trench.

	JEFFERSON COUNTY ALABAMA ENVIRONMENTAL SERVICES DEPARTMENT
NOV. 1999	PIPE BEDDING AND BACKFILL DETAILS UNIMPROVED SURFACES
APPROVED:	STANDARD DRAWING NO. SD2010 RCC

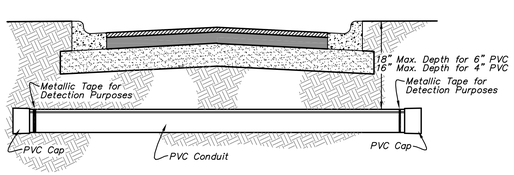

UTILITY/IRRIGATION CONDUIT DETAIL

N.T.S.

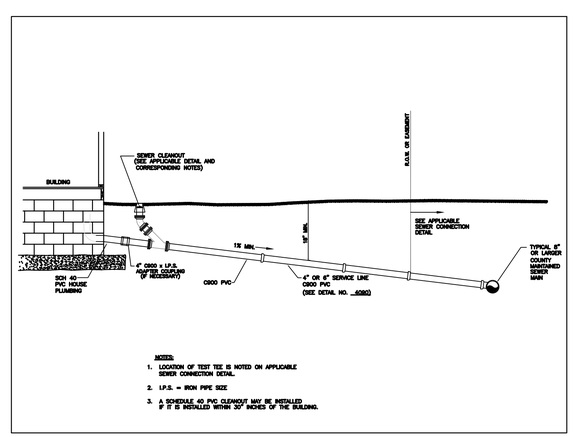

NOTES:
1. LOCATION OF TEST TEE IS NOTED ON APPLICABLE SEWER CONNECTION DETAIL.
2. I.P.S. = IRON PIPE SIZE
3. A SCHEDULE 40 PVC CLEANOUT MAY BE INSTALLED IF IT IS INSTALLED WITHIN 30" INCHES OF THE BUILDING.

C900 PVC SERVICE LINE DETAIL

N.T.S.

MBA ENGINEERS, INC.
STRUCTURAL CIVIL GEOTECHNICAL
300 20TH STREET NORTH, SUITE 100
BIRMINGHAM, ALABAMA 35203
P(205) 323-6385 F(205) 324-0698
TOM CALLISON, P.E. TCALLISON@MBASEI.COM

THOMAS M. McELRATH, ARCHITECT
ARCHITECTURE and SPACE PLANNING
717 MERIT SPRINGS ROAD
GADSDEN, ALABAMA 35901
PHONE: (256) 490-8244
EMAIL: TOM@TMM-ARCHITECT.COM

A NEW SENIOR WELLNESS CENTER
at
2829 W. Meighan Boulevard
for
THE CITY of GADSDEN, ALABAMA

DETAILS

CONSTRUCTION DOCUMENTS

DRAWN	MSO
CHECKED	TFC
SCALE	AS NOTED
DATE	SEPTEMBER 15, 2022
FILE	C7.0 DETAILS.DWG
JOB NO.	22-01
REVISIONS	

SHEET **C7.2** OF 01 SHEETS

TYPICAL ROADWAY CUT/ASPHALT PATCH

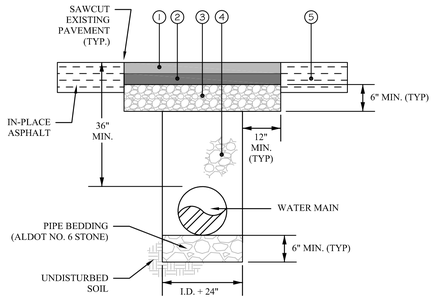

TYPICAL ASPHALT BUILD-UP

1. ALDOT 424A SUPERPAVE BITUMINOUS CONCRETE WEARING SURFACE LAYER, 1/2" MAX. AGGREGATE SIZE MIX, ESAL RANGE C/D (APPROX. 220 LBS/SY - 2" COMPACTED THICKNESS)
2. ALDOT 424B SUPERPAVE BITUMINOUS CONCRETE UPPER BINDER LAYER, 3/4" MAX. AGGREGATE SIZE MIX, ESAL RANGE C/D (APPROX. 440 LBS/SY - 4" COMPACTED THICKNESS)
3. ALDOT 825B CRUSHED AGGREGATE BASE COURSE, COMPACTED TO 98% STANDARD PROCTOR DENSITY (6" COMPACTED THICKNESS)
4. ALDOT NO. 78 CRUSHED STONE BACKFILL, COMPACTED TO 95% STANDARD PROCTOR DENSITY
5. IN-PLACE PAVEMENT - RETAIN

TYPICAL CONCRETE THRUST BLOCK LAYOUT

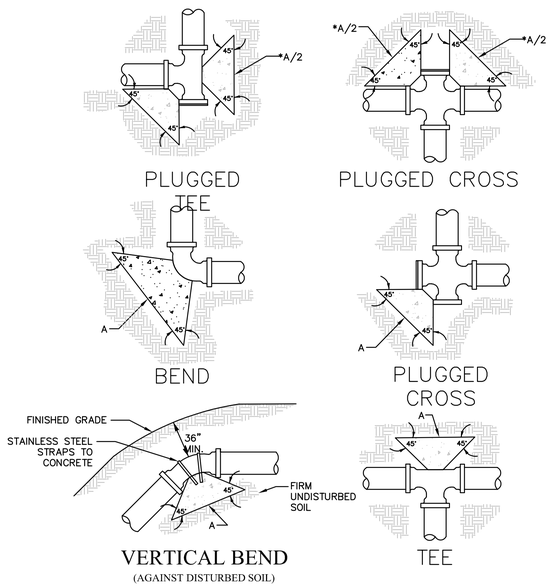

NOTES:

1. NON STANDARD THRUST BLOCKING WILL REQUIRE SPECIAL DETAILING PROVIDED BY A LICENSED ENGINEER AND APPROVED BY THE GWWSB.
2. ALL MECHANICAL JOINT FITTINGS THAT REQUIRE THRUST BLOCKS SHALL BE WRAPPED IN PLASTIC. CONCRETE SHALL NOT BE POURED OVER JOINTS.
3. CLASS "B" CONCRETE SHALL BE AS DEFINED IN THE GWWSB STANDARD SPECIFICATIONS.
4. THE PREFERRED METHOD OF THRUST RESTRAINT SHALL BE THROUGH THE USE OF EXTERNALLY RESTRAINED JOINT DEVICES SUCH AS MEGA-LUGS IN LIEU OF CONCRETE BLOCKING. CONCRETE BLOCKING SHALL ONLY BE PERMITTED WHERE APPROVED BY THE GWWSB AND SHALL NOT BE USED IN CONJUNCTION WITH MEGA-LUG RESTRAINTS. THE APPROPRIATE LENGTH OF RESTRAINT SHALL BE CALCULATED IN ACCORDANCE WITH THE MANUFACTURERS RECOMMENDATIONS.

TAPPING SLEEVE

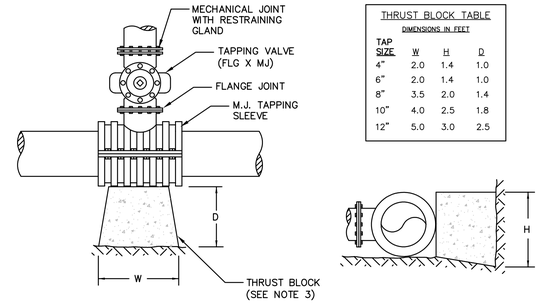

THRUST BLOCK TABLE

DIMENSIONS IN FEET

TAP SIZE	W	H	D
4"	2.0	1.4	1.0
6"	2.0	1.4	1.0
8"	3.5	2.0	1.4
10"	4.0	2.5	1.8
12"	5.0	3.0	2.5

NOTES:

1. TAPPING SLEEVES SHALL BE INSTALLED A MINIMUM DISTANCE OF 4-FEET FROM THE NEAREST JOINT.

TYPICAL CONCRETE THRUST BLOCK DESIGN

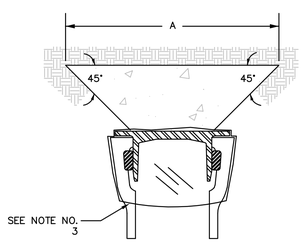

BELL JOINT PLUG UNRESTRAINED TYPE

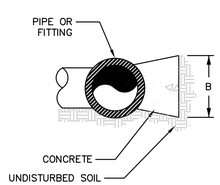

SIDE VIEW

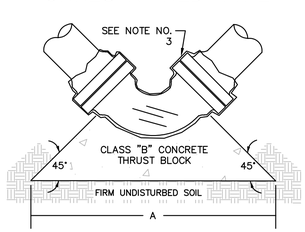

TYPICAL BEND THRUST BLOCK

BEARING AREA

AREA (SF) AGAINST UNDISTURBED SOIL

SIZE	TEE, WYE OR 90° BEND	45° BEND	22.5° BEND	11.5° BEND
4"	1	1	1	1
6"	3	2	1.5	1
8"	5	3	2	1.5
10"	9	5	3	2
12"	12	8	4	3
16"	22	12	5	4
BASED ON 2500 LB/ft.² SOIL.				
BEARING AREA (SF) = A X B				1=(A/B)=3

NOTES:

1. 45 DEGREE ANGLE REQUIRED FOR ALL THRUST BLOCKS.
2. NON STANDARD THRUST BLOCKING WILL REQUIRE SPECIAL DETAILING PROVIDED BY A LICENSED ENGINEER AND APPROVED BY THE GWWSB.
3. ALL MECHANICAL JOINT FITTINGS THAT REQUIRE THRUST BLOCKS SHALL BE WRAPPED IN PLASTIC. CONCRETE SHALL NOT BE POURED OVER JOINTS.
4. CLASS "B" CONCRETE SHALL BE AS DEFINED IN THE GWWSB STANDARD SPECIFICATIONS.
5. THE PREFERRED METHOD OF THRUST RESTRAINT SHALL BE THROUGH THE USE OF EXTERNALLY RESTRAINED JOINT DEVICES SUCH AS MEGA-LUGS IN LIEU OF CONCRETE BLOCKING. CONCRETE BLOCKING SHALL ONLY BE PERMITTED WHERE APPROVED BY THE GWWSB AND SHALL NOT BE USED IN CONJUNCTION WITH MEGA-LUG RESTRAINTS. THE APPROPRIATE LENGTH OF RESTRAINT SHALL BE CALCULATED IN ACCORDANCE WITH THE MANUFACTURERS RECOMMENDATIONS.

TYPICAL AUTOMATIC AIR RELEASE VALVE

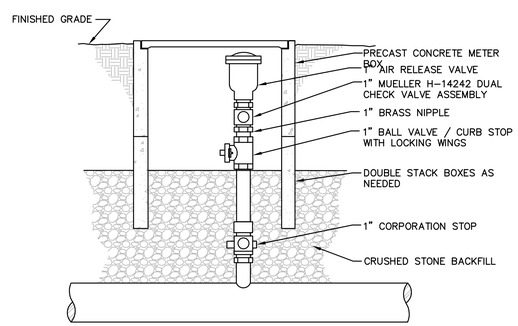

TRACER TAPE FOR PLASTIC PIPE

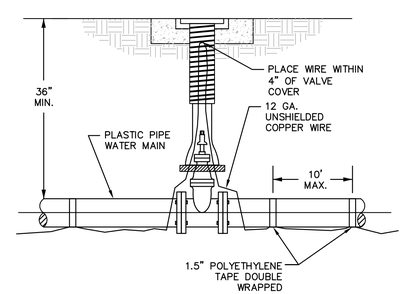

MBA ENGINEERS, INC.
STRUCTURAL CIVIL GEOTECHNICAL
300 20TH STREET NORTH, SUITE 100
BIRMINGHAM, ALABAMA 35203
P(205) 323-6385 F(205) 324-0698
TOM CALLISON, P.E. TCALLISON@MBASEI.COM

ALABAMA LICENSED 9-15-22 No. 25020 PROFESSIONAL ENGINEER THOMAS F. CALLISON

THOMAS M. McELRATH, ARCHITECT
ARCHITECTURE and SPACE PLANNING
717 MERIT SPRINGS ROAD
GADSDEN, ALABAMA 35901
PHONE: (256) 490-8244
EMAIL: TOM@TMM-ARCHITECT.COM

A NEW SENIOR WELLNESS CENTER
at
2829 W. Meighan Boulevard
for
THE CITY of GADSDEN, ALABAMA

DETAILS

CONSTRUCTION DOCUMENTS

DRAWN	MSO
CHECKED	TFC
SCALE	AS NOTED
DATE	SEPTEMBER 15, 2022
FILE	C7.0 DETAILS.DWG
JOB NO.	22-01
REVISIONS	

SHEET C7.3 OF 01 SHEETS

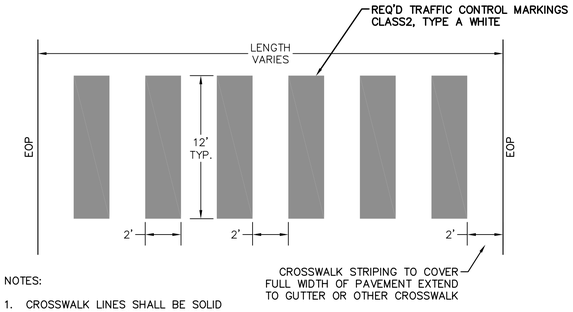

NOTES:

1. CROSSWALK LINES SHALL BE SOLID WHITE TRAFFIC CONTROL MARKINGS CLASS 2, TYPE A
2. CROSSWALK SHOULD EXTEND THE FULL WIDTH OF PAVEMENT FROM EP TO EP OR THE EDGE OF THE INTERSECTING CROSSWALK.
3. ORIENT CROSS BARS TO AS SHOWN ON THE PLAN, PARALLEL WITH TRAFFIC

PEDESTRIAN CROSSWALK DETAIL

N.T.S.

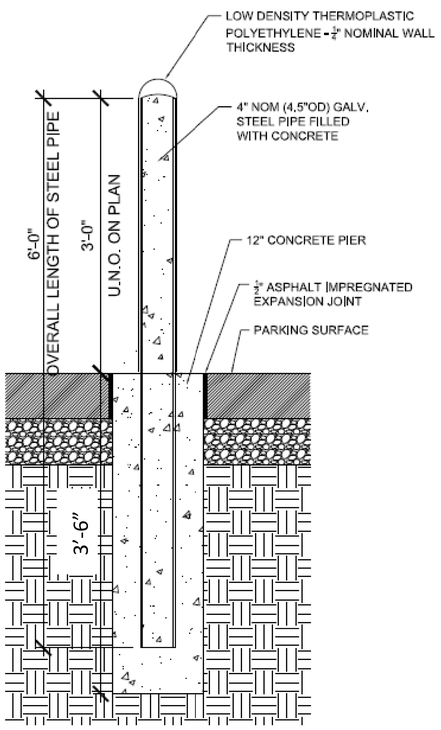

LOW BOLLARD DETAIL

N.T.S.

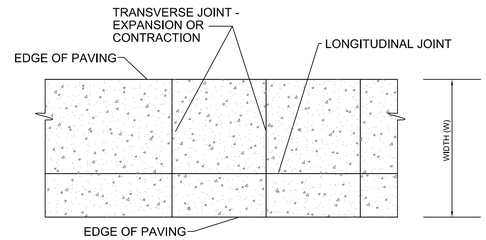

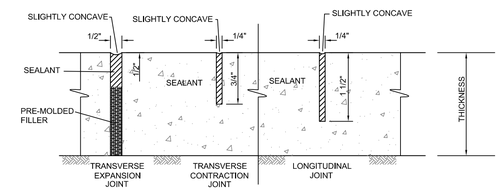

PLAN VIEW

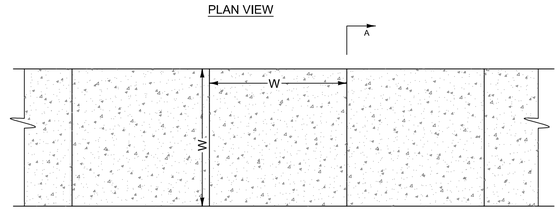

PLAN VIEW

FOR WIDTHS UP TO 5'

N.T.S.

ELEVATION VIEW

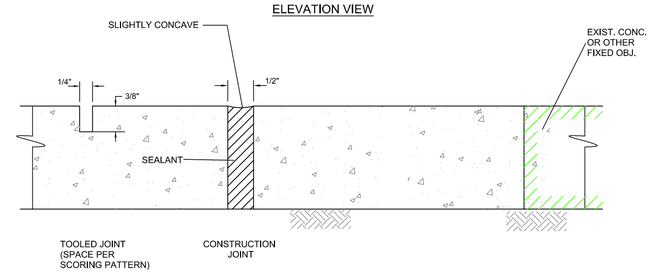

ELEVATION VIEW

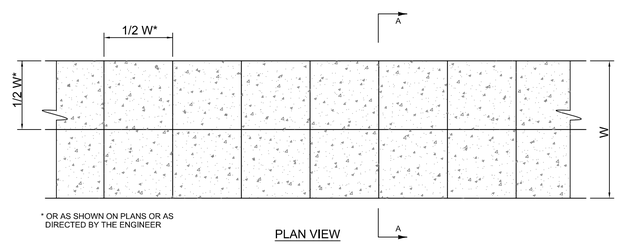

* OR AS SHOWN ON PLANS OR AS DIRECTED BY THE ENGINEER

PLAN VIEW

FOR WIDTHS OVER 5'

N.T.S.

SCORING PATTERNS

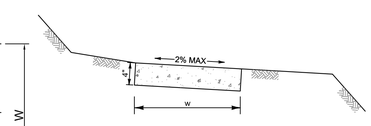

SECTION A-A

CONCRETE SIDEWALK JOINTS

GENERAL SIDEWALK NOTES:

1. 4000 PSI CONCRETE @ 28 DAYS, NATURAL COLOR (NO COLORED CONCRETE UNLESS OTHERWISE APPROVED)
2. 4" THICK (MINIMUM)
3. LIGHT BROOM FINISH
4. DESIGN AND CONSTRUCTION SHALL COMPLY WITH PUBLIC RIGHT OF WAY (PROWAG), ACCESSIBILITY GUIDELINES (LATEST EDITION) PUBLISHED BY THE UNITED STATES ACCESS BOARD.

JOINTING DETAILS ARE APPLICABLE UNLESS CONTRADICTED IN THE LANDSCAPE / HARDSCAPE PLANS

SIDEWALK DETAIL

N.T.S.

MBA ENGINEERS, INC.
STRUCTURAL CIVIL GEOTECHNICAL
300 20TH STREET NORTH, SUITE 100
BIRMINGHAM, ALABAMA 35203
P(205) 323-6385 F(205) 324-0698
TOM CALLISON, P.E. TCALLISON@MBASEI.COM

THOMAS M. McELRATH, ARCHITECT
ARCHITECTURE and SPACE PLANNING
717 MERIT SPRINGS ROAD
GADSDEN, ALABAMA 35901
PHONE: (256) 490-8244
EMAIL: TOM@TMM-ARCHITECT.COM

A NEW SENIOR WELLNESS CENTER
at
2829 W. Meighan Boulevard
for
THE CITY of GADSDEN, ALABAMA

DETAILS

CONSTRUCTION DOCUMENTS

DRAWN	MSO
CHECKED	TFC
SCALE	AS NOTED
DATE	SEPTEMBER 15, 2022
FILE	C7.0 DETAILS.DWG
JOB NO.	22-01
REVISIONS	

SHEET **C7.4** OF 01 SHEETS

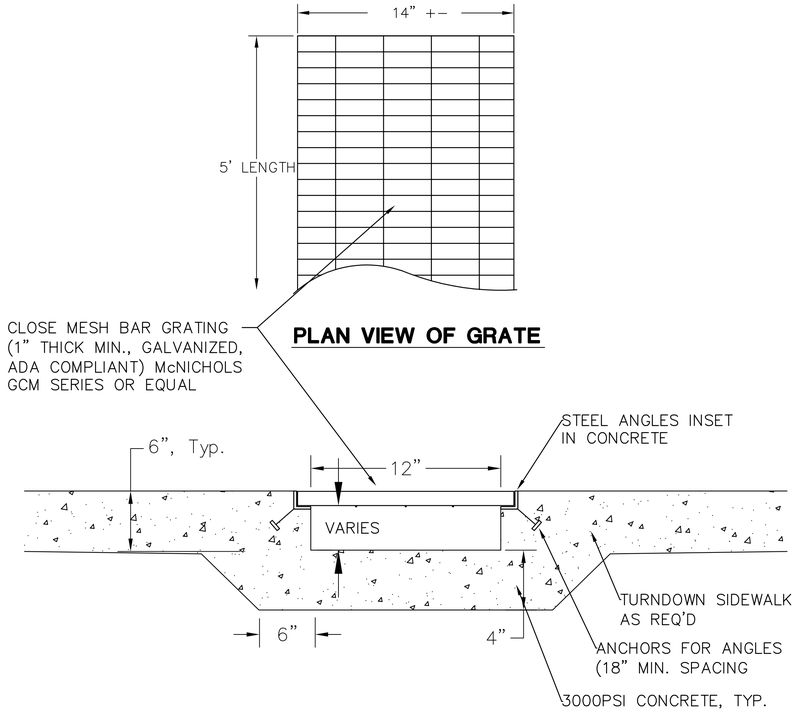

12" FLUME DETAIL

N.T.S.

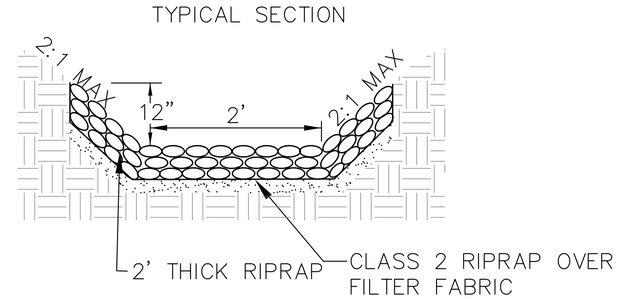

RIPRAP LINED SWALE

N.T.S.

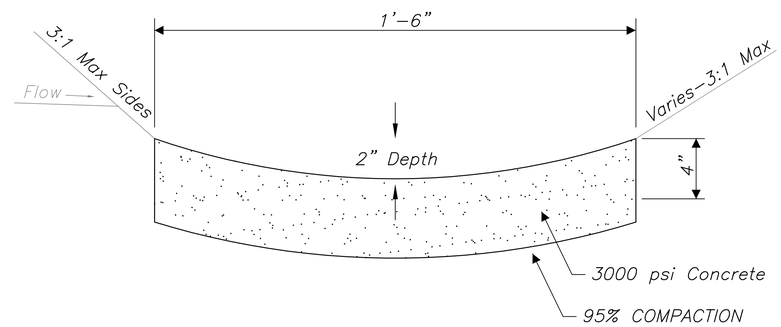

NOTES:
A. 0.5% Min. Slope Required
B. Control Joints Every 8'. Expansion Joints Every 24'.

18' CONCRETE FLUME

N.T.S.

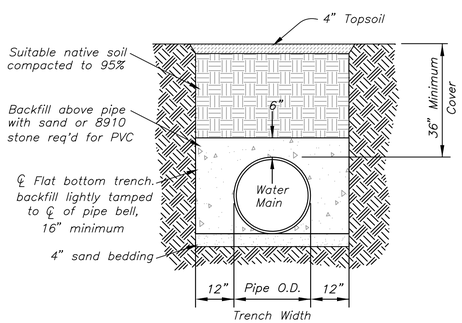

PIPE WATER BEDDING DETAIL LAYING IN SOIL WITHOUT ROCK IN LANDSCAPE AREAS

N.T.S.

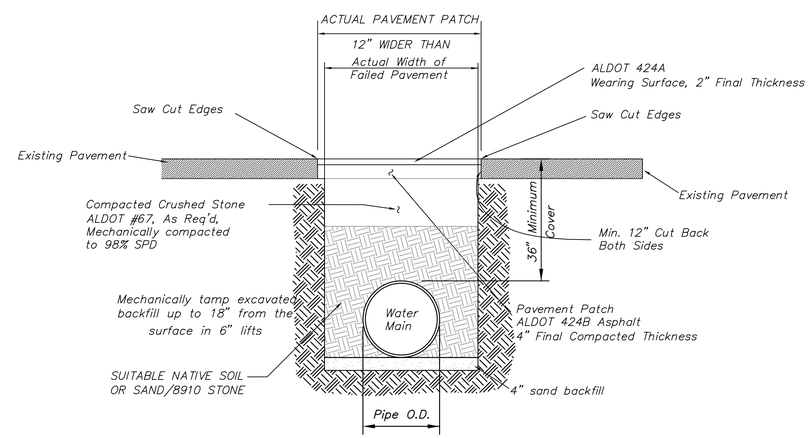

CITY/COUNTY STREET LAYING UNDER PAVING OPEN CUT DETAIL

N.T.S.

MBA ENGINEERS, INC.
STRUCTURAL CIVIL GEOTECHNICAL
300 20TH STREET NORTH, SUITE 100
BIRMINGHAM, ALABAMA 35203
P(205) 323-6385 F(205) 324-0698
TOM CALLISON, P.E. TCALLISON@MBASEI.COM

THOMAS M. McELRATH, ARCHITECT
ARCHITECTURE and SPACE PLANNING
717 MERIT SPRINGS ROAD
GADSDEN, ALABAMA 35901
PHONE: (256) 490-8244
EMAIL: TOM@TMM-ARCHITECT.COM

A NEW SENIOR WELLNESS CENTER
at
2829 W. Meighan Boulevard
for
THE CITY of GADSDEN, ALABAMA

DETAILS

CONSTRUCTION DOCUMENTS

DRAWN	MSO
CHECKED	TFC
SCALE	AS NOTED
DATE	SEPTEMBER 15, 2022
FILE	C7.0 DETAILS.DWG
JOB NO.	22-01
REVISIONS	

SHEET C7.5 OF 01 SHEETS

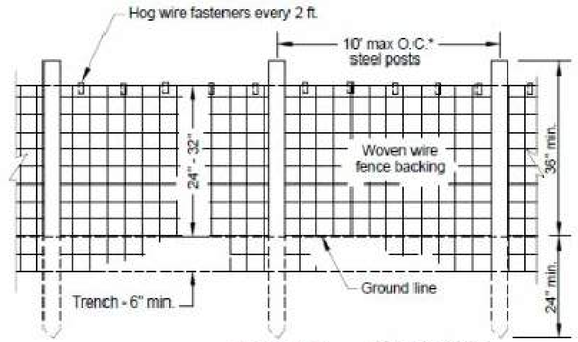

FRONT VIEW
(Not to scale)

* AASHTO M-288 recommends a 4 ft. post spacing.

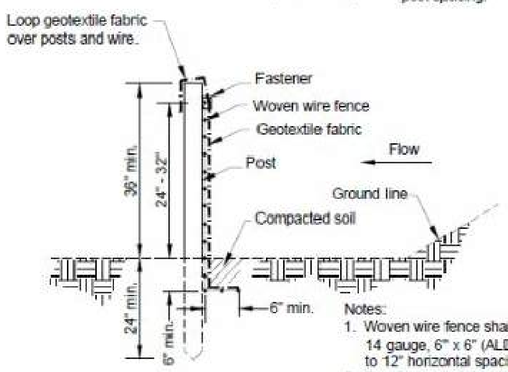

SIDE VIEW
(Not to scale)

Notes:
1. Woven wire fence shall be minimum 14 gauge, 6" x 6" (ALDOT allows up to 12" horizontal spacing).
2. The woven wire fencing shall be fastened to the upstream side of posts by staples or wire ties.
3. Geotextile fabric shall be securely fastened to the woven wire fencing.
4. Machine trenched geotextile shall be trenched vertical at least 8" deep.

SILT FENCE (TYPE A) DETAIL

N.T.S.

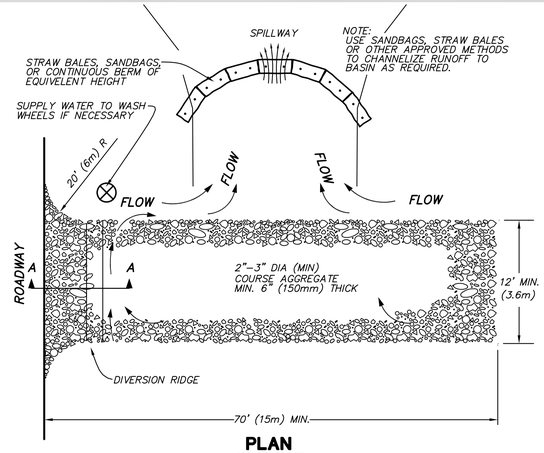

PLAN

NOTES:

1. THE ENTRANCE SHALL BE MAINTAINED IN A CONDITION THAT WILL PREVENT TRACKING OR FLOWING OF SEDIMENT ONTO PUBLIC RIGHT-OF-WAYS. THIS MAY REQUIRE TOP DRESSING, REPAIR AND/OR CLEANOUT OF ANY MEASURES USED TO TRAP SEDIMENT.
2. WHEN NECESSARY, WHEELS SHALL BE CLEANED PRIOR TO ENTRANCE ONTO PUBLIC RIGHT-OF-WAY.
3. WHEN WASHING IS REQUIRED, IT SHALL BE DONE ON AN AREA STABLIZED WITH CRUSHED STONE THAT DRAINS INTO AN APPROVED SEDIMENT TRAP OR SEDIMENT BASIN.

TEMPORARY GRAVEL CONSTRUCTION ENTRANCE/EXIT DETAIL

N.T.S.

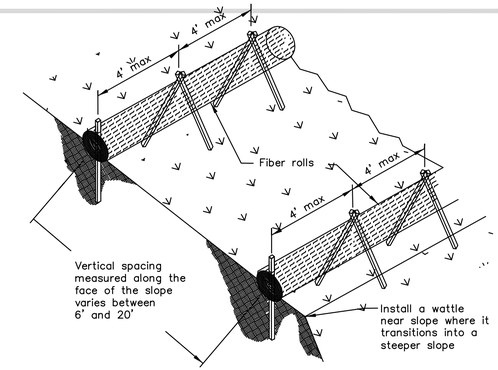

TYPICAL WATTLE INSTALLATION

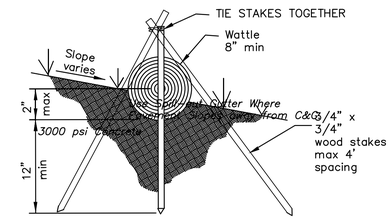

ENTRENCHMENT DETAIL

Note:
1. Install wattles on a level contour where possible.
2. Turn back and form pockets to pond water on sloped applications at least every foot of fall or as required.

WATTLE DETAIL

N.T.S.

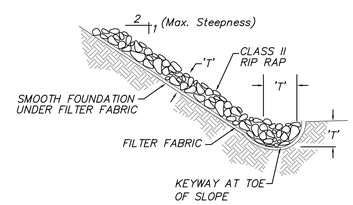

NOTE:
'T' = THICKNESS: THICKNESS SHALL BE DETERMINED BY THE ENGINEER. MINIMUM THICKNESS SHALL BE 1.5x THE MAXIMUM STONE DIAMETER

RIP RAP PROTECTION DETAIL

N.T.S.

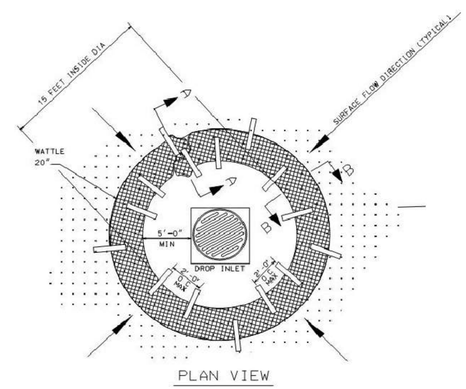

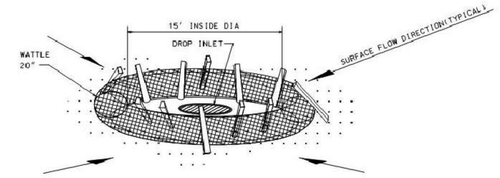

DROP INLET PROTECTION

NOTES:
1. ANCHORING STAKES SHALL BE SIZED, SPACED, AND BE OF A MATERIAL THAT EFFECTIVELY SECURES THE WATTLE. STAKE SPACING SHALL BE A MAXIMUM OF TWO FEET.
2. OVERLAP ENDS OF WATTLES PER MANUFACTURERS RECOMMENDATIONS (1'MIN.3'MAX).
3. SEE ALDOT LIST 11-24 FOR APPROVED WATTLES.
4. SILT FENCE OR SAND BAGS MAY ALSO BE USED FOR THIS APPLICATION. HAY BALES NOT ACCEPTABLE DURING THIS STAGE.

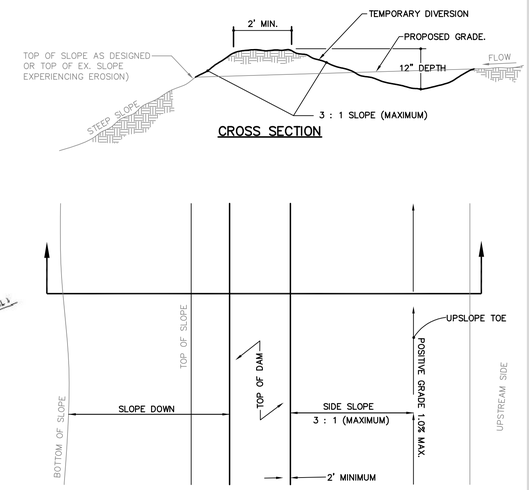

DIVERSIONS ARE GENERALLY REQUIRED TO PREVENT EROSION ON A STEEP SLOPE, USUALLY A FILL SLOPE, BY PREVENTING RUNOFF FROM RUNNING UNCONTROLLED DOWN THE SLOPE FACE AND ALLOWING TIME FOR VEGETATION TO TAKE HOLD. DIVERSIONS SHOULD BE LOCATED AT THE TOP OF THE SLOPE AND DIRECT RUNOFF LATERALLY TO A POINT SUCH AS A TEMPORARY SLOPE DRAIN PIPE OR A RIPRAP LINED FLUME THAT CAN TRANSMIT THE RUNOFF TO THE BOTTOM OF THE SLOPE IN A CONTROLLED FASHION. IT IS ALSO REQUIRED PREVENT EROSION FROM OCCURING IN THE DIVERSION DITCH ITSELF W/ CHECK DAMS OR EROSION CONTROL NETTING.

STANDARD DIVERSION DITCH

N.T.S.

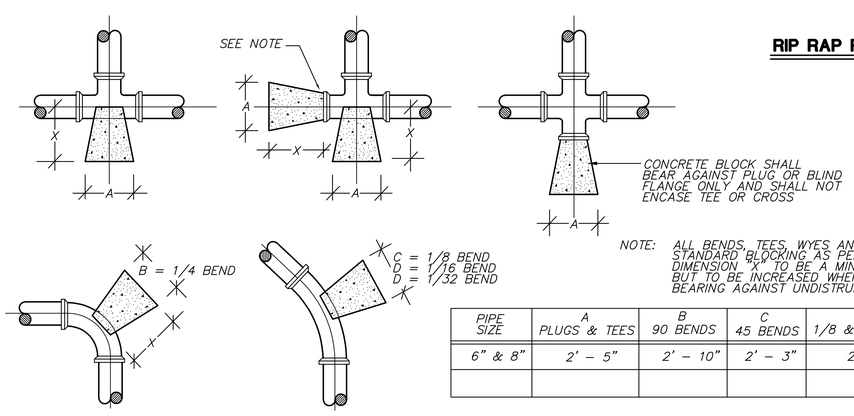

NOTE: ALL BENDS, TEES, WYES AND PLUGS TO HAVE STANDARD BLOCKING AS PER SCHEDULE AND DETAIL DIMENSION "X" TO BE A MINIMUM ON ONE (1) FOOT, BUT TO BE INCREASED WHERE NECESSARY TO PROVIDE BEARING AGAINST UNDISTRUBED TRENCH WALL.

PIPE SIZE	A PLUGS & TEES	B 90 BENDS	C 45 BENDS	D 1/8 & 1/16 BENDS	DEPTH OF BLOCK
6" & 8"	2' - 5"	2' - 10"	2' - 3"	2' - 5"	1' - 6"

FOR ALL WATER DETAILS AND SPECIFICATIONS, REFER TO THE BWWB

THRUST BLOCK SCHEDULE

NTS

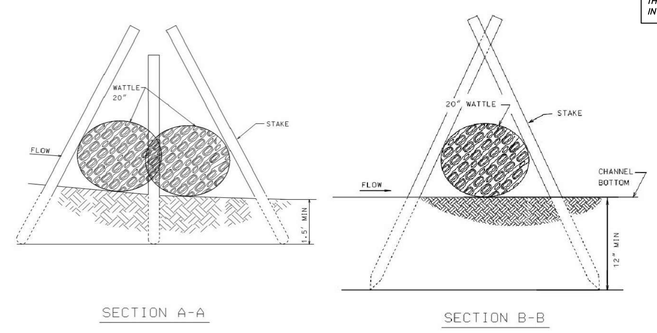

WATTLE INLET PROTECTION

N.T.S.

MBA ENGINEERS, INC.
STRUCTURAL CIVIL GEOTECHNICAL
300 20TH STREET NORTH, SUITE 100
BIRMINGHAM, ALABAMA 35203
P(205) 323-6385 F(205) 324-0698
TOM CALLISON, P.E. TCALLISON@MBASEI.COM

ALABAMA LICENSED 9-15-22 No. 25020 PROFESSIONAL ENGINEER THOMAS F. CALLISON

THOMAS M. McELRATH, ARCHITECT
ARCHITECTURE and SPACE PLANNING
717 MERIT SPRINGS ROAD
GADSDEN, ALABAMA 35901
PHONE: (256) 490-8244
EMAIL: TOM@TMM-ARCHITECT.COM

A NEW SENIOR WELLNESS CENTER
at
2829 W. Meighan Boulevard
for
THE CITY of GADSDEN, ALABAMA

DETAILS

CONSTRUCTION DOCUMENTS

DRAWN	MSO
CHECKED	TFC
SCALE	AS NOTED
DATE	SEPTEMBER 15, 2022
FILE	C7.0 DETAILS.DWG
JOB NO.	22-01
REVISIONS	

SHEET C7.6 OF 01 SHEETS

TYPICAL SERVICE CONNECTIONS

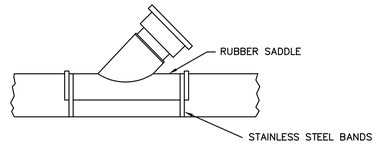

RUBBER WYE SADDLE

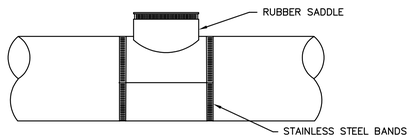

RUBBER TEE SADDLE

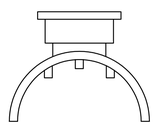

PVC TEE SADDLE

PVC SADDLE FOR USE WITH MAINS 3034 OR SCH. 40–STAINLESS STEEL BANDS

NOTE:

1. ALL CONNECTIOONS SHALL BE MADE WITH AN APPROVED TYPE SADDLE FITTING. THE SADDLE SHALL BE PLACED OVER A CAREFULLY CUT OPENING IN THE UPPER QUADRANT OF THE SEWER MAIN AND ATTACHED TO THE MAIN USING STAINLESS STEEL BANDS. UNDER NO CIRCUMSTANCES SHALL ANY LATERAL CONNECTIONS BE ALLOWED TO PROTRUDE INTO THE SEWER MAIN.

TYPICAL CLEANOUT

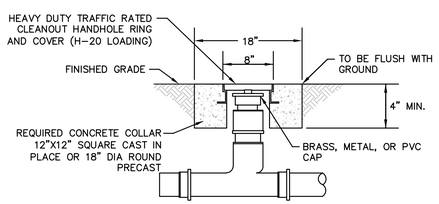

CLEANOUT IN PAVED AREAS

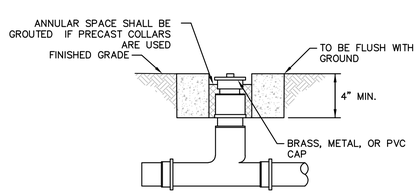

CLEANOUT IN NON–PAVED AREAS

NOTES:

1. ALL CLEANOUTS SHALL BE INSTALLED OUTSIDE THE PUBLIC RIGHT–OF–WAY OR EASEMENTS, UNLESS APPROVED OTHERWISE.

TRENCH DETAIL FOR GRAVITY SEWER MAINS

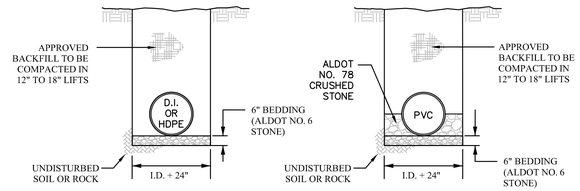

UN-PAVED TRENCH

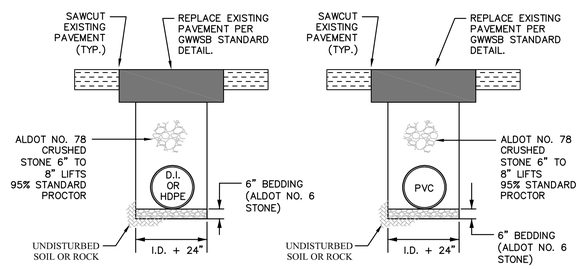

PAVED TRENCH

NOTES:

1. BEDDING MATERIAL SHALL BE ALDOT NO. 6 CRUSHED STONE PER ALDOT STANDARD SPECIFICATIONS.
2. TRENCH WIDTH VARIES BASED ON WALL STABILITY. STABLE WALLS WIDTH AS NEEDED TO JOIN PIPE AND COMPACT HAUNCHING AND INITIAL BACKFILL. THE TRENCH WIDTH AT UNSTABLE WALLS SHOULD BE A MINIMUM FIVE TIMES PIPE DIAMETER.
3. FLOWABLE FILL CAN BE USED AS BACKFILL WITH PRIOR APPROVAL AND MUST BE ALLOWED 24 HOURS TO CURE PRIOR TO BACKFILLING.
4. APPROVED BACKFILL MATERIAL INCLUDES ALDOT NO. 6 CRUSHED STONE, FLOWABLE FILL AND APPROVED SOIL. ALTERNATIVE MATERIAL MUST BE PREAPPROVED.
5. FLOWABLE FILL SHALL HAVE A 28 DAY COMPRESSIVE STRENGTH OF 50 PSI TO 200 PSI.
6. EXISTING ASPHALT SHALL BE REPLACED IN ACCORDANCE WITH GWWSB STANDARD DETAILS.

TYPICAL ROADWAY CUT/ASPHALT PATCH

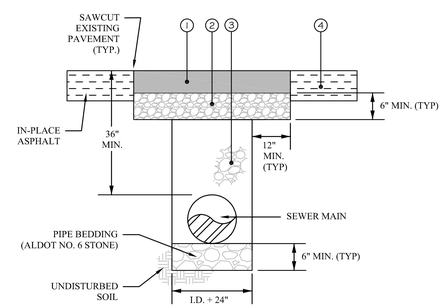

TYPICAL ASPHALT BUILD-UP

1. ALDOT 424A SUPERPAVE BITUMINOUS CONCRETE WEARING SURFACE LAYER, 1/2" MAX. AGGREGATE SIZE MIX, ESAL RANGE C/D (APPROX. 440 LBS/SY - 4" COMPACTED THICKNESS)

   OR

   ALDOT 424B SUPERPAVE BITUMINOUS CONCRETE UPPER BINDER LAYER, 3/4" MAX. AGGREGATE SIZE MIX, ESAL RANGE C/D (APPROX. 440 LBS/SY - 4" COMPACTED THICKNESS)

2. ALDOT 825B CRUSHED AGGREGATE BASE COURSE, COMPACTED TO 98% STANDARD PROCTOR DENSITY (6" COMPACTED THICKNESS)
3. ALDOT NO. 78 CRUSHED STONE BACKFILL, COMPACTED TO 95% STANDARD PROCTOR DENSITY
4. IN-PLACE PAVEMENT - RETAIN

NOTES:

1. LAYER NO. 1 SHALL BE A MINIMUM 4-INCH COMPACTED THICKNESS AND SHALL CONSIST OF ALDOT 424A WEARING SURFACE (1/2" AGG. MIX) OR ALDOT 424B UPPER BINDER LAYER (3/4" AGG. MIX).
2. ASPHALT MATERIALS SHALL BE PLACED IN MINIMUM 3-INCH LOOSE LIFTS AND COMPACTED IN ACCORDANCE WITH ALDOT SPECIFICATIONS.

GENERAL SERVICE CONNECTION CONFIGURATION

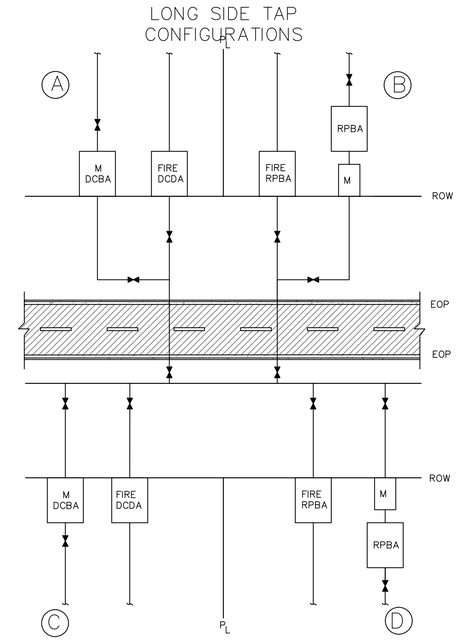

LEGEND:
M --- WATER METER
DCBA --- DOUBLE CHECK BACFLOW ASSEMBLY
DCDA --- DOUBLE DETECTOR CHECK ASSEMBLY
RPBA --- REDUCED PRESSURE BACKFLOW ASSEMBLY

FIRE METER BUILDING LOCATION

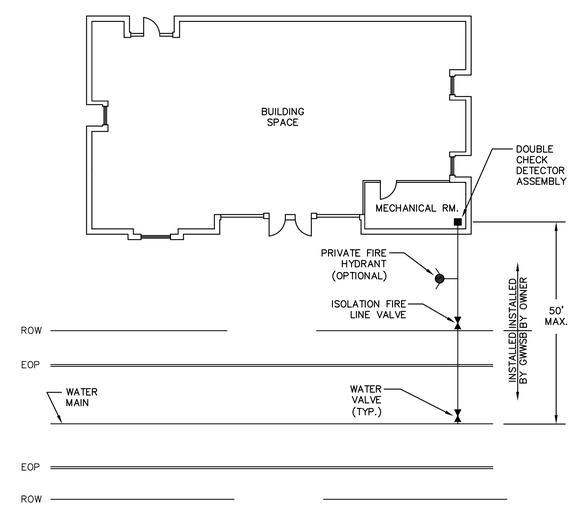

NOTES:

1. FIRE LINES TO SERVE SPRINKLERS, PRIVATE FIRE HYDRANTS, STANDPIPES AND FIRE PUMPS FOR PRIVATE PROTECTION SHALL BE DESIGNED BY THE OWNER'S ENGINEER AND APPROVED BY THE CITY OF GADSDEN FIRE DEPARTMENT.
2. ALL FIRE LINE CONNECTIONS SHALL HAVE A DOUBLE CHECK DETECTOR ASSEMBLY (DCDA).
3. THE DCDA SHALL BE INSTALLED 50–FEET OR LESS FROM THE WATER MAIN CONNECTION IN A LOCATION ACCESSIBLE TO GWWSB PERSONNEL.
4. THE MAINTENANCE OF THE VAULT, DCDA AND APPURTENANCES ON PRIVATE PROPERTY SHALL BE THE RESPONSIBILITY OF THE PROPERTY OWNER.

MBA ENGINEERS, INC.
STRUCTURAL CIVIL GEOTECHNICAL
300 20TH STREET NORTH, SUITE 100
BIRMINGHAM, ALABAMA 35203
P(205) 323-6385 F(205) 324-0698
TOM CALLISON, P.E. TCALLISON@MBASEI.COM

ALABAMA LICENSED 9-15-22 No. 25020 PROFESSIONAL ENGINEER THOMAS F. CALLISON

THOMAS M. McELRATH, ARCHITECT
ARCHITECTURE and SPACE PLANNING
717 MERIT SPRINGS ROAD
GADSDEN, ALABAMA 35901
PHONE: (256) 490-8244
EMAIL: TOM@TMM-ARCHITECT.COM

A NEW SENIOR WELLNESS CENTER
at
2829 W. Meighan Boulevard
for
THE CITY of GADSDEN, ALABAMA

DETAILS

CONSTRUCTION DOCUMENTS

DRAWN	MSO
CHECKED	TFC
SCALE	AS NOTED
DATE	SEPTEMBER 15, 2022
FILE	C7.0 DETAILS.DWG
JOB NO.	22–01
REVISIONS	

SHEET C7.7 OF (01) SHEETS

FIRE METERVAULT LOCATION

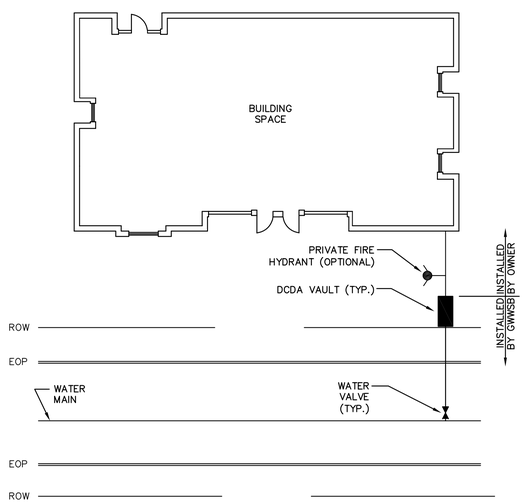

NOTES:

1. FIRE LINES TO SERVE SPRINKLERS, PRIVATE FIRE HYDRANTS, STANDPIPES AND FIRE PUMPS FOR PRIVATE PROTECTION SHALL BE DESIGNED BY THE OWNER'S ENGINEER AND APPROVED BY THE CITY OF GADSDEN FIRE DEPARTMENT.
2. ALL FIRE LINE CONNECTIONS SHALL HAVE A DOUBLE CHECK DETECTOR ASSEMBLY (DCDA).
3. THE DCDA SHALL BE INSTALLED 50-FEET OR LESS FROM THE WATER MAIN CONNECTION IN A LOCATION ACCESSIBLE TO GWWSB PERSONNEL.
4. THE MAINTENANCE OF THE VAULT, DCDA AND APPURTENANCES ON PRIVATE PROPERTY SHALL BE THE RESPONSIBILITY OF THE PROPERTY OWNER.

TYPICAL 2" SERVICE CONNECTION

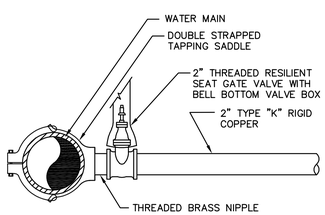

TYPICAL 2.0" METER VAULT W/ DCBA

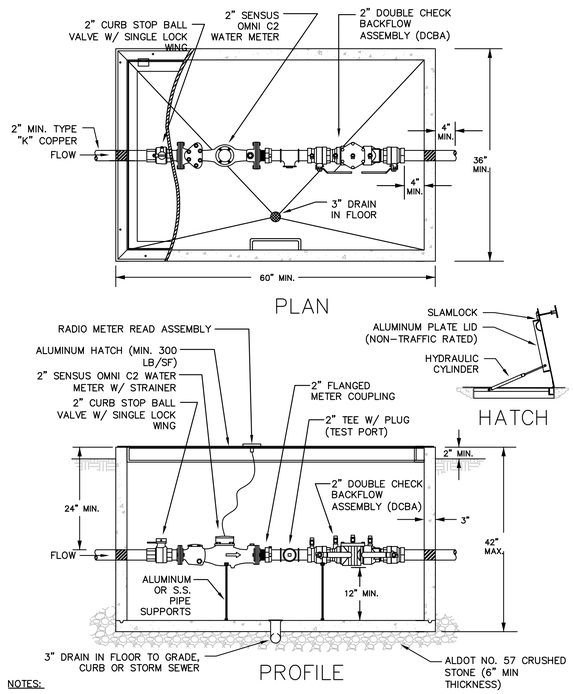

NOTES:

1. WATER METER SHALL BE 2" SENSUS OMNI C2 METER, UNLESS OTHERWISE SPECIFIED BY GWWSB.
2. DOUBLE CHECK BACKFLOW ASSEMBLY SHALL BE 2" WATTS MODEL NO. LF007M1QT OR EQUAL.
3. CURB STOP BALL VALVES WITH LOCK WING SHALL BE 2" A.Y. MCDONALD MODEL NO. 76101 OR EQUAL.
4. FLANGED METER COUPLING SHALL BE FORD METER BOX LOK-PAK COUPLING OR EQUAL.
5. ALL CONCRETE SHALL BE CLASS "A" (4,000 PSI) IN ACCORDANCE WITH THE GWWSB STANDARD SPECIFICATIONS.

TYPICAL 4" & 6" METER VAULT

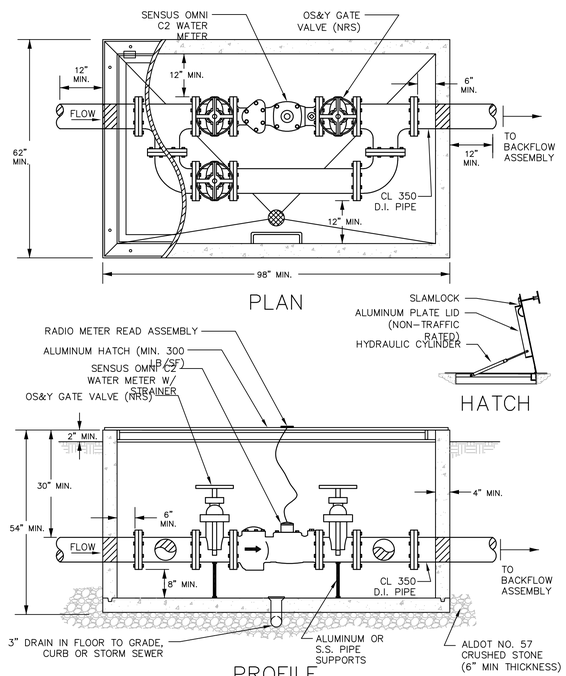

NOTES:

1. WATER METER SHALL BE SENSUS OMNI C2 METER, UNLESS OTHERWISE SPECIFIED BY GWWSB.
2. ALL CONCRETE SHALL BE CLASS "A" (4,000 PSI) IN ACCORDANCE WITH THE GWWSB STANDARD SPECIFICATIONS.
3. ALL PIPE AND FITTINGS SHALL BE DUCTILE IRON, PRESSURE CLASS 350.
4. BYPASS PIPING AND VALVES SHALL BE THE SAME DIAMETER AS THE METER.

DOUBLE CHECK BACKFLOW ASSEMBLY (DCBA)

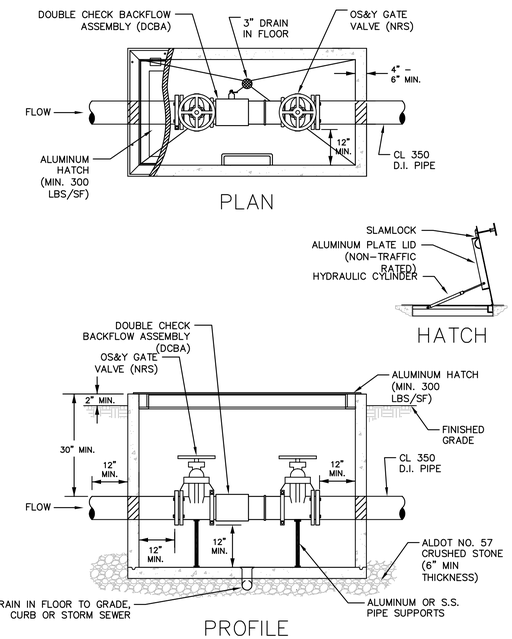

NOTES:

1. DOUBLE CHECK DETECTOR ASSEMBLY SHALL BE MANUFACTURED BY AMES, WATTS, OR AN APPROVED EQUAL.
2. ALL CONCRETE SHALL BE CLASS "A" (4,000 PSI) IN ACCORDANCE WITH THE GWWSB STANDARD SPECIFICATIONS.

TRENCH DETAIL FOR WATER MAINS

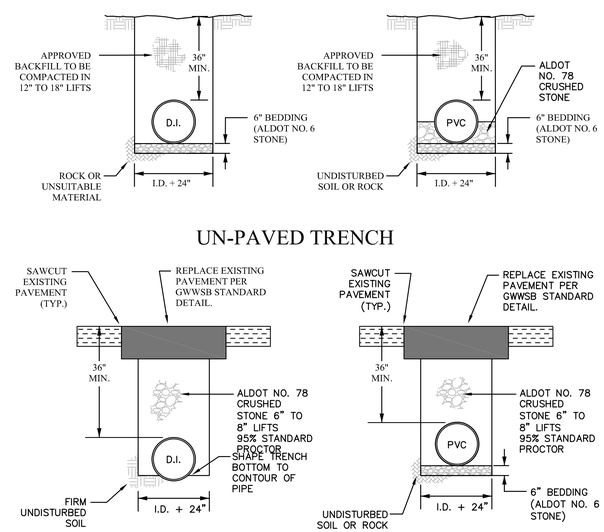

NOTES:

1. BEDDING MATERIAL SHALL BE ALDOT NO. 6 CRUSHED STONE PER ALDOT STANDARD SPECIFICATIONS.
2. TRENCH WIDTH VARIES BASED ON WALL STABILITY. STABLE WALLS WIDTH AS NEEDED TO JOIN PIPE AND COMPACT HAUNCHING AND INITIAL BACKFILL. THE TRENCH WIDTH AT UNSTABLE WALLS SHOULD BE A MINIMUM FIVE TIMES PIPE DIAMETER.
3. FLOWABLE FILL CAN BE USED AS BACKFILL WITH PRIOR APPROVAL AND MUST BE ALLOWED 24 HOURS TO CURE PRIOR TO BACKFILLING.
4. APPROVED BACKFILL MATERIAL INCLUDES ALDOT NO. 6 CRUSHED STONE, FLOWABLE FILL AND APPROVED SOIL. ALTERNATIVE MATERIAL MUST BE PREAPPROVED.
5. FLOWABLE FILL SHALL HAVE A 28 DAY COMPRESSIVE STRENGTH OF 50 PSI TO 200 PSI.
6. EXISTING ASPHALT SHALL BE REPLACED PER GWWSB STANDARD DETAILS.

MBA ENGINEERS, INC.
STRUCTURAL CIVIL GEOTECHNICAL
300 20TH STREET NORTH, SUITE 100
BIRMINGHAM, ALABAMA 35203
P(205) 323-6385 F(205) 324-0698
TOM CALLISON, P.E. TCALLISON@MBASEI.COM

ALABAMA LICENSED 9-15-22 No. 25020 PROFESSIONAL ENGINEER THOMAS F. CALLISON

THOMAS M. McELRATH, ARCHITECT
ARCHITECTURE and SPACE PLANNING
717 MERIT SPRINGS ROAD
GADSDEN, ALABAMA 35901
PHONE: (256) 490-8244
EMAIL: TOM@TMM-ARCHITECT.COM

A NEW SENIOR WELLNESS CENTER
at
2829 W. Meighan Boulevard
for
THE CITY of GADSDEN, ALABAMA

DETAILS

CONSTRUCTION DOCUMENTS

DRAWN	MSO
CHECKED	TFC
SCALE	AS NOTED
DATE	SEPTEMBER 15, 2022
FILE	C7.0 DETAILS.DWG
JOB NO.	22-01
REVISIONS	

SHEET C7.8 OF 01 SHEETS

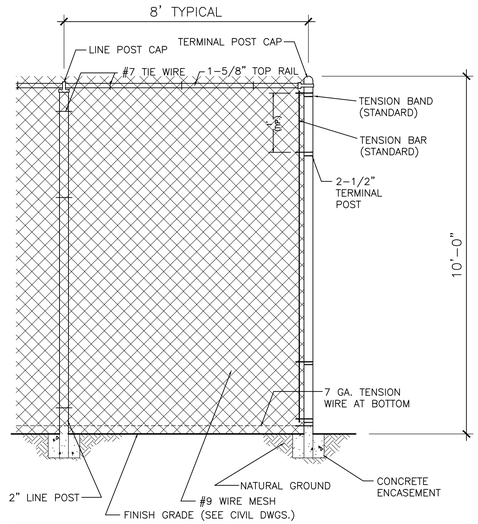

NOTE: GATE POSTS SHALL BE 4" O.D.

NOTE: PROVIDE FULL HEIGHT PRIVACY SLATS AT NORTH, SOUTH AND EAST SIDES OF EACH COURT.

TYPICAL CHAIN LINK FENCE DETAIL at PICKLE BALL COURTS

SC: 1/2" = 1'-0"

SEE CIVIL SITE PLAN for COURT LOCATIONS

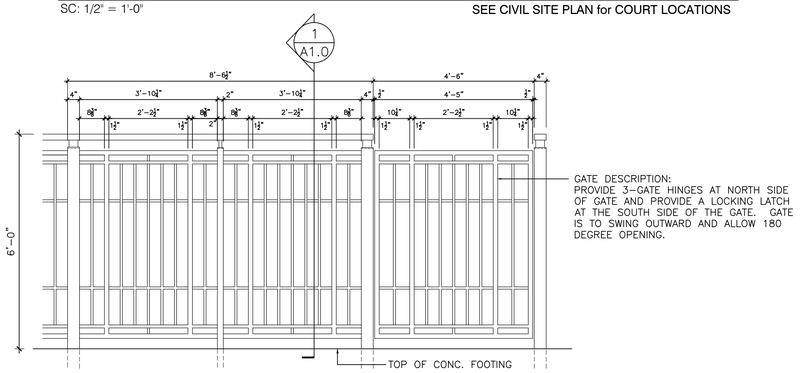

ACCESS GATE and TYPICAL STEEL TUBE FENCE SECTION at COURTYARD

SC: 1/2" = 1'-0"

SEE PARTIAL PLAN this SHEET for LOCATION and DIMENSIONS

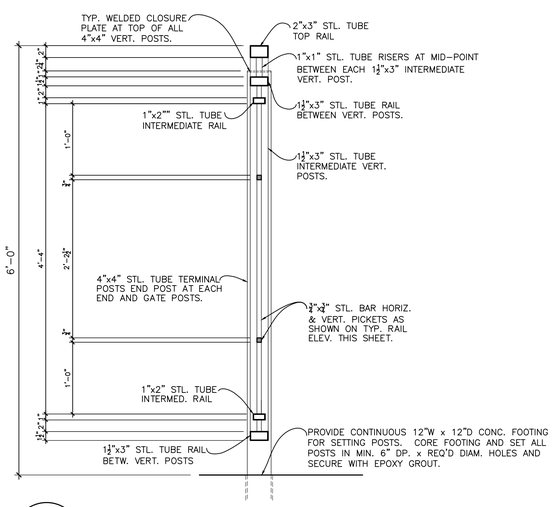

1 / A1.0 SECTION thru STEEL TUBE ENCLOSURE RAILING

SCALE: 1" = 1'-0"

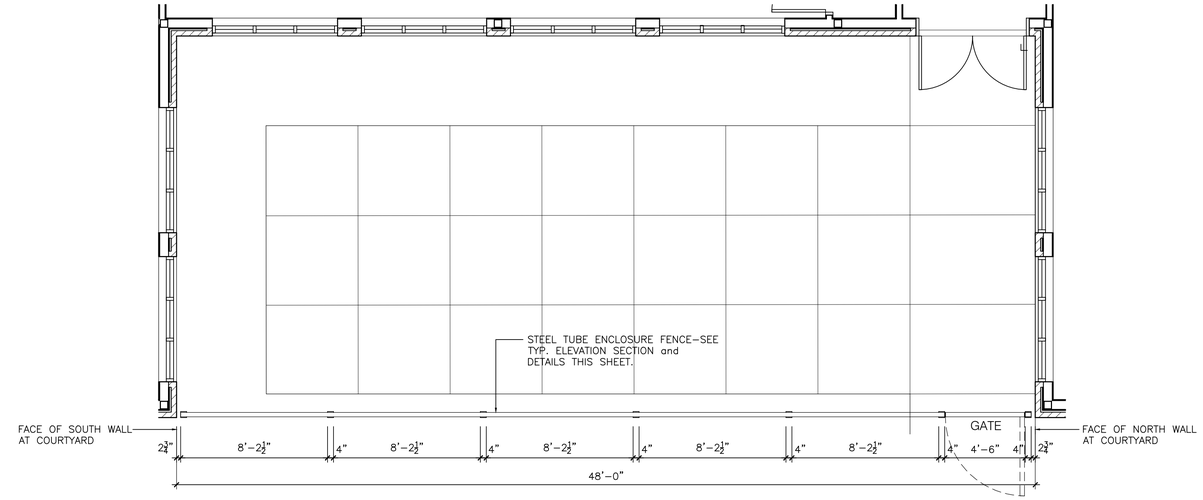

COURTYARD and WROUGHT IRON FENCE LAYOUT

SC: 1/4" = 1'-0"

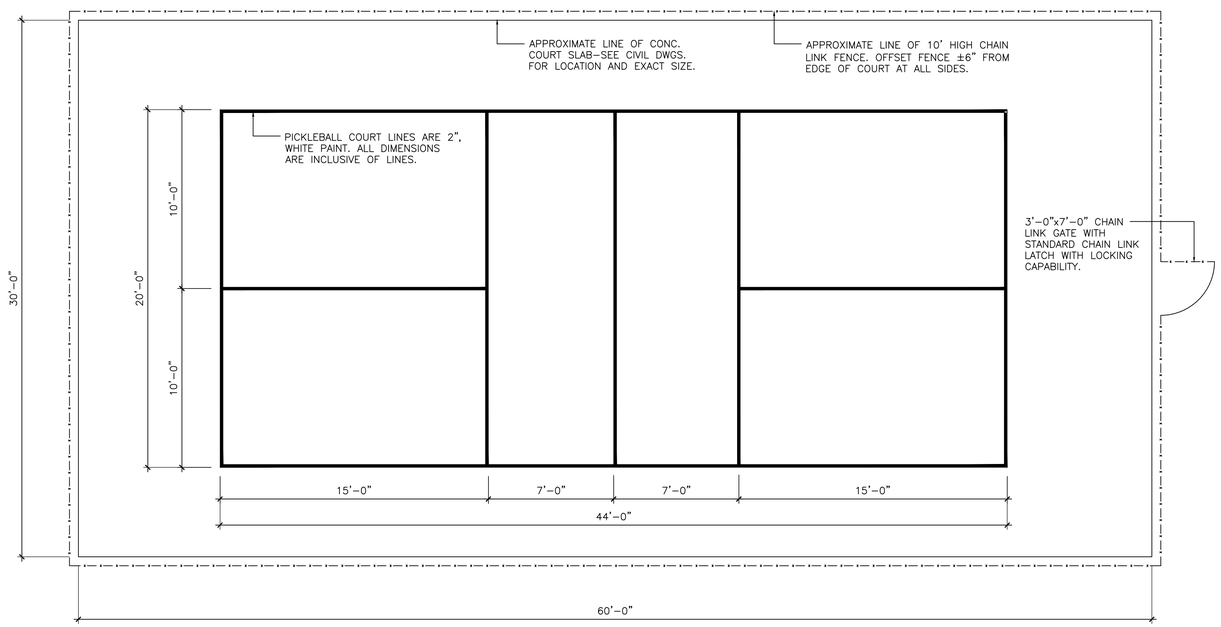

PICKLE BALL COURT LAYOUT

SC: 1/4" = 1'-0"

NORTH COURT SHOWN. SOUTH COURT sim but OPPOSITE HAND.

COURT COATING AND NET SPECIFICATIONS:

COURT SURFACE SHALL BE EQUAL TO SPORTMASTER SPORT SURFACES "PICKLEMASTER" CUSHIONED PICKLEBALL COURT SURFACE COATING SYSTEM. SURFACE PREPARATION AND PRODUCT APPLICATION SHALL BE IN ACCORDANCE WITH THE MANUFACTURER'S GUIDELINES. ALL COURT MARKINGS SHALL BE "WHITE LINES" AND COURT COATING COLOR WILL BE AS SELECTED FROM MANUFACTURERS STANDARD COLORS. EQUAL PRODUCTS BY OTHER MANUFACTURER'S WILL BE CONSIDERED SUBJECT TO SUBMISSION IN ACCORDANCE WITH THE PRIOR APPROVAL SECTION OF THE SPECIFICATIONS.

NET POSTS SHALL BE EQUAL TO DOUGLAS "PREMIER XS-36 PICKLEBALL POSTS 2⅞" O.D." AND GS-24RD PVC GROUND SLEEVES, 24" LONG FOR 2⅞" DIAMETER POSTS. EQUAL PRODUCTS BY OTHER MANUFACTURERS WILL BE CONSIDERED SUBJECT TO SUBMISSION IN ACCORDANCE WITH THE PRIOR APPROVAL SECTION OF THE SPECIFICATIONS.

NETS SHALL BE EQUAL TO DOUGLAS "JTN-30 PICKLEBALL NET-36"x21'-9"". EQUAL PRODUCTS BY OTHER MANUFACTURERS WILL BE CONSIDERED SUBJECT TO SUBMISSION IN ACCORDANCE WITH THE PRIOR APPROVAL SECTION OF THE SPECIFICATIONS.

STATE OF ALABAMA
THOMAS M. McELRATH
3072
GADSDEN, ALABAMA
REGISTERED ARCHITECT

THOMAS M. McELRATH, ARCHITECT
ARCHITECTURE and SPACE PLANNING
717 MERIT SPRINGS ROAD
GADSDEN, ALABAMA 35901
PHONE: (256) 490-8244
EMAIL: TOM@TMM-ARCHITECT.COM

A NEW SENIOR WELLNESS CENTER
at
2829 W. Meighan Boulevard
for
THE CITY of GADSDEN, ALABAMA

MISC. SITE DETAILS

DRAWN	TMM
CHECKED	TMM
SCALE	AS NOTED
DATE	SEPTEMBER 15, 2022
FILE	A1.0_Misc Site Det.dwg
JOB NO.	22-01
REVISIONS	

SHEET A1.0 OF 18 SHEETS

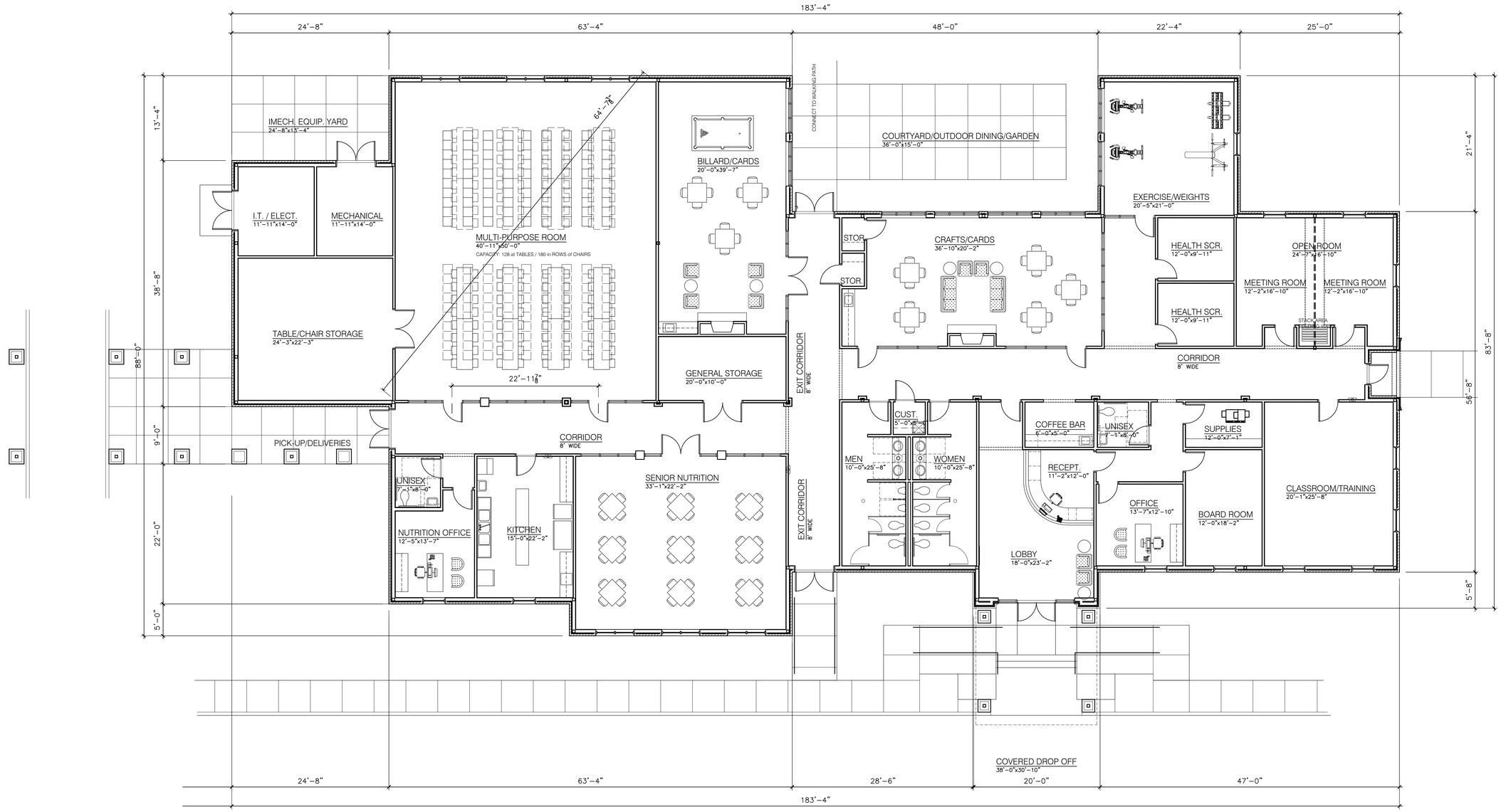

LIFE SAFETY - FLOOR PLAN

SCALE: 1/8" = 1'-0"

BUILDING CODE/ZONING COMPLIANCE INFORMATION:

1. ENFORCED CODES: 2021 International Building Codes (IBC)
2. ZONING DISTRICT: "R-1" PER CITY OF GADSDEN ZONING MAP
3. TYPE OF CONSTRUCTION (Per 2021 IBC)
   PROPOSED BUILDING _____ TYPE II B-FULLY SPRINKLERED
4. USE & OCCUPANCY CLASSIFICATION: MIXED USE UN-SEPARATED BUSINESS GROUP "B" AND ASSEMBLY GROUP "A3"(Per Section 304)
5. MAXIMUM AREA, HEIGHT & NUMBER OF STORIES (For Group B; Type II-B Construction-Per T503)
   MAXIMUM AREA PER FLOOR _____ 38,000 SQ. FT.
   MAXIMUM NUMBER OF STORIES _____ 3 (THREE) STORIES
   ACTUAL NUMBER OF STORIES _____ 1 (ONE) STORY
   MAXIMUM ALLOWABLE HEIGHT _____ 75'
   ACTUAL MAXIMUM HEIGHT _____ 40'
6. ACTUAL BUILDING AREA TABULATION-COMPLIANCE WITH 2021 IBC: ___ 12,346 G.S.F.
7. FIRE RESISTANCE RATINGS
   MAIN BUILDING (Per Table 601) TYPE II-B
   Structural frame (columns) _____ 0 HOURS
   Exterior nonbearing walls and partitions _____ 0 HOURS (Per Table 601)
   Interior nonbearing walls and partitions _____ 0 HOURS
   Floor construction (including supporting beams & joists) _____ 0 HOURS
   Roof construction (including supporting beams & joists) _____ 0 HOURS
   Exit Access Corridors _____ 0 HOURS (Per Table 1020.2)
8. EGRESS WIDTH REQUIREMENTS
   MIXED USE UN-SEPARATEDD (FULLY SPRINKLERED) (Per Table 1004.5)
   A. Group "B" Occupant Load: 10,300 G.S.F./150 G.S.F. per occupant = 68
   B. Group "A-3" Occupant Load: 2,046 G.S.F./7 G.S.F. per occupant = 180
9. MINIMUM NUMBER OF REQUIRED FIRE EXTINGUISHERS (Per Directive of State Fire Marshall's Office)
   Fire Extinguishers are provided in the New Building at locations such that no occupant is more than 75' from an available exitinguisher. There are no "special-hazard"areas in the New Addition.

STATE OF ALABAMA
THOMAS M. McELRATH
3072
GADSDEN, ALABAMA
REGISTERED ARCHITECT

THOMAS M. McELRATH, ARCHITECT
ARCHITECTURE and SPACE PLANNING
717 MERIT SPRINGS ROAD
GADSDEN, ALABAMA 35901
PHONE: (256) 490-8244
EMAIL: TOM@TMM-ARCHITECT.COM

A NEW SENIOR WELLNESS CENTER
at
2829 W. Meighan Boulevard
for
THE CITY of GADSDEN, ALABAMA

LIFE SAFETY FLOOR PLAN

DRAWN	TMM
CHECKED	TMM
SCALE	AS NOTED
DATE	SEPTEMBER 15, 2022
FILE	A2.0_LS Floor Plan.dwg
JOB NO.	22-01
REVISIONS	

SHEET A2.0 OF 18 SHEETS

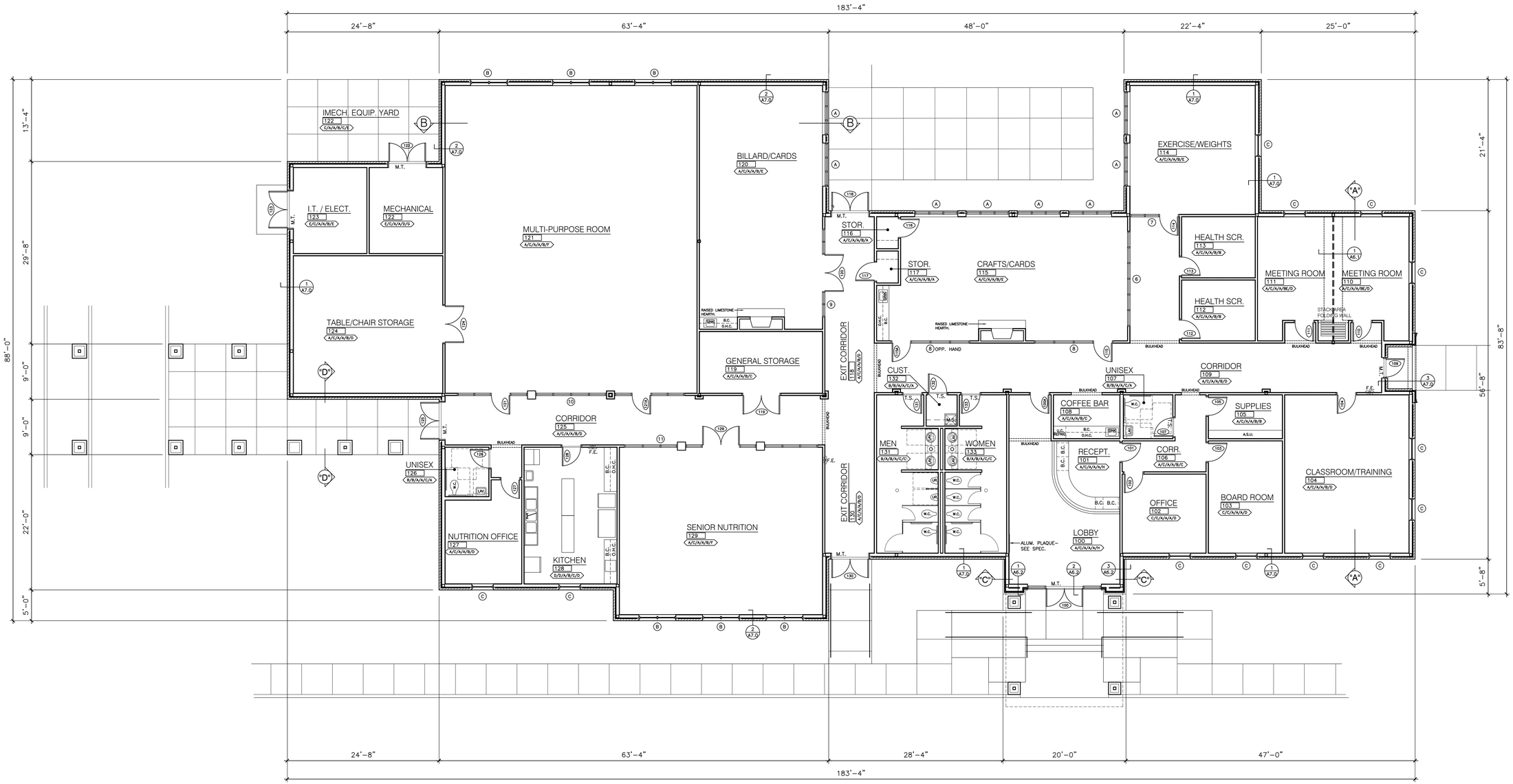

ARCHITECTURAL NOTES - FLOOR PLAN

SCALE: 1/8" = 1'-0"

PLAN NORTH

ABBREVIATIONS: (APPLICABLE TO ALL ARCHITECTURAL FLOOR PLANS WHERE INDICATED)

A.S.U.	ADJUSTABLE SHELF UNIT
B.C.	BASE CABINET
C.E.S.	CARPET EDGE STRIP at floor
℄	CENTERLINE
D.F.	DRINKING FOUNTAIN – See Plumbing
D.S.	DOWNSPOUT & SPLASHBLOCK – See Roofing
D.	DRYER – See Plumbing and/or Electrical
D.W.	DISHWASHER – N.I.C. – See Plumbing and/or Electrical
F.D.	FLOOR DRAIN – See Plumbing
F.E.C.	FIRE EXTINGUISHER & CABINET
F.O.B.	FACE OF BLOCK OR BRICK
F.O.S.	FACE OF STUDS
F.O.W.	FACE OF WALL
F.S.	FEATURE STRIP at floor – 2" wide unless noted otherwise
HCP.	HANDICAP ACCESSIBLE
H.R.	HAND RAILING – See Typical Details
I.M.	ICE MACHINE – N.I.C. – See Plumbing for Rough-in
LAV.	LAVATORY – See Plumbing
L.T.	LAUNDRY TUB – See Plumbing
M.B.	MARKER BOARD – See Specifications
M.S.	MOP SINK – See Plumbing
M.T.	METAL THRESHOLD
N.I.C	NOT IN CONTRACT
O.C.	ON CENTER
O.H.C.	OVER HEAD CABINET
P.B.	PIPE BOLLARD – See Civil
P.T.	PRESSURE TREATED
REF.	REFRIGERATOR
R.S.	RUBBER REDUCER STRIP at floor
T.B.	TACK BOARD – See Specifications
T.O.S.	TOP OF SLAB
T.S.	METAL TRANSITION STRIP AT PORC. TILE EDGE – See Details & Tile Spec.
T.W.H.	TANKLESS WATER HEATER – See Plumbing
V.S.T.R.	VENT STACK THROUGH ROOF – See Plumbing
W1.	WASHING MACHINE – N.I.C. – See Plumbing for Rough-in
W2.	EXTRACTOR WASHING MACHINE – N.I.C. – See Plumbing for Rough-in
W.C.	WATER CLOSET – See Plumbing

CONCEALED WOOD BLOCKING at STUD PARTITIONS:

PROVIDE CONCEALED 2x6 WOOD BLOCKING IN STUD PARTITIONS, WHERE REQUIRED TO ADEQUATELY ANCHOR & SUPPORT ALL WALL-MOUNTED ITEMS, INCLUDING BUT NOT LIMITED TO GRAB BARS AND OTHER TOILET ACCESSORIES, CASEWORK, MILLWORK, PLUMBING FIXTURES & TRIM, WALL-MOUNTED DOOR STOPS, WALL-MOUNTED TELEVISION BRACKETS, AND HANDRAIL BRACKETS. SEE SPECIFIC DISCIPLINES FOR LOCATIONS.

INTERIOR FINISH LEGEND

FLOOR (U/V/W/X/Y/Z)	
A	RESILIENT FLOOR TILE (LVT)
B	PORCELAIN TILE (THIN-SET)
C	CARPET
D	QUARRY TILE (THIN-SET)
E	EXPOSED CONCRETE WITH DUST-PROOF HARDENER

BASE (U/V/W/X/Y/Z)	
A	NONE
B	15" HIGH THIN-SET PORCELAIN TILE
C	4" HIGH COVE RUBBER
D	6" HIGH THIN-SET QUARRY TILE

WAINSCOT (U/V/W/X/Y/Z)	
A	NONE
B	4'-3" HIGH THIN-SET PORCELAIN TILE

WALLS (U/V/W/X/Y/Z)	
A	GYPSUM BOARD WITH EGGSHELL ENAMEL PAINT
B	FRP PANELS OVER GYP. BOARD SUBSTRATE (SEE SPEC.)

CEILING (U/V/W/X/Y/Z)	
A	NON-RATED LAY-IN TEGULAR-EDGE ACOUST. TILE IN 24 x 24" GRID
B	NON-RATED LAY-IN SQUARE-EDGE ACOUST. TILE IN 24 x 24" GRID
C	NON-RATED LAY-IN VINYL-FACED GYP. BD. IN 24 x 24" GRID
D	EXPOSED STRUCTURE/INSULATION-NO FINISH CEILING
E	GYPSUM BOARD WITH EGGSHELL LATEX ENAMEL PAINT (SEE SPEC.)

CEILING HGT. (U/V/W/X/Y/Z)	
A	8'-0"
B	8'-8"
C	9'-0"
D	10'-0"
E	11'-0"
F	13'-0"
G	13'-10" EXPOSED STRUCTURE
H	18'-0"

STATE OF ALABAMA
THOMAS M. McELRATH
3072
GADSDEN, ALABAMA
REGISTERED ARCHITECT

THOMAS M. McELRATH, ARCHITECT
ARCHITECTURE and SPACE PLANNING
717 MERIT SPRINGS ROAD
GADSDEN, ALABAMA 35901
PHONE: (256) 490-8244
EMAIL: TOM@TMM-ARCHITECT.COM

A NEW SENIOR WELLNESS CENTER
at
2829 W. Meighan Boulevard
for
THE CITY of GADSDEN, ALABAMA

ARCH. NOTES
FLOOR PLAN

DRAWN	TMM
CHECKED	TMM
SCALE	AS NOTED
DATE	SEPTEMBER 15, 2022
FILE	A2.1_AN Floor Plan.dwg
JOB NO.	22-01
REVISIONS	

SHEET A2.1 OF 18 SHEETS

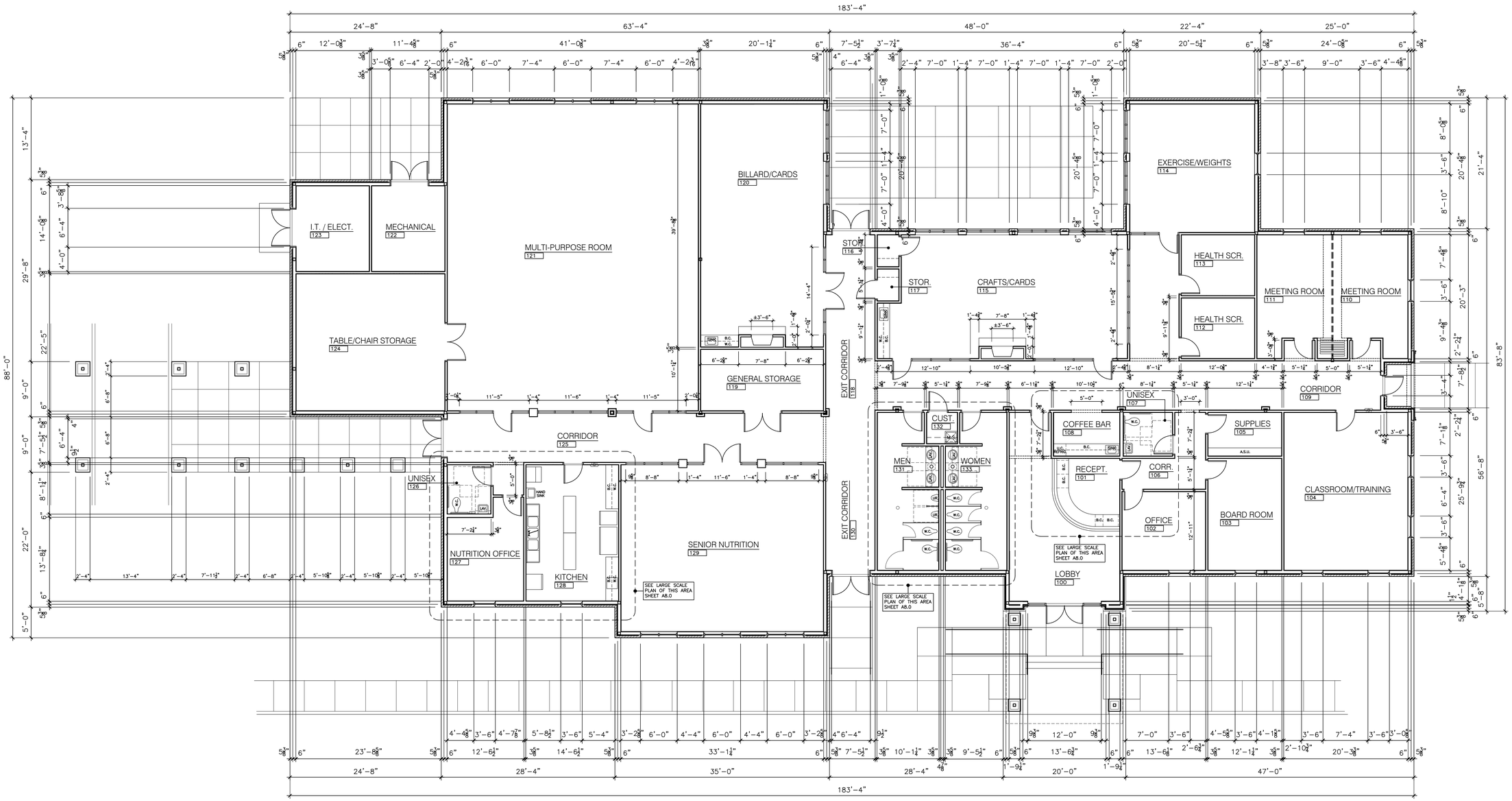

DIMENSIONS - FLOOR PLAN

SCALE: 1/8" = 1'-0"

PLAN NORTH

DIMENSION NOTE:

ALL DIMENSIONS ARE SHOWN TO FACE OF STUDS, MASONRY, OR STEEL STRUCTURE; OR TO CENTERLINE OF COLUMNS – UNLESS SHOWN OR NOTED OTHERWISE.

DOWNSPOUT LOCATION COORDINATION:

COORDINATE ALL DOWNSPOUT LOCATIONS WITH CIVIL, ROOFING AND ELEVATIONS DRAWINGS. FINAL LOCATIONS SHALL BE CONFIRMED BY THE ARCHITECT AND CIVIL CONSULTANTS FOR PROPER FUNCTION AND TIE–IN AND WITH THE ARCHITECT FOR PROPER AESTHETICS.

STATE OF ALABAMA
THOMAS M. McELRATH
3072
GADSDEN, ALABAMA
REGISTERED ARCHITECT

THOMAS M. McELRATH, ARCHITECT
ARCHITECTURE and SPACE PLANNING
717 MERIT SPRINGS ROAD
GADSDEN, ALABAMA 35901
PHONE: (256) 490-8244
EMAIL: TOM@TMM-ARCHITECT.COM

A NEW SENIOR WELLNESS CENTER
at
2829 W. Meighan Boulevard
for
THE CITY of GADSDEN, ALABAMA

DIMENSIONS FLOOR PLAN

DRAWN	TMM
CHECKED	TMM
SCALE	AS NOTED
DATE	SEPTEMBER 15, 2022
FILE	A2.2_Dim Floor Plan.dwg
JOB NO.	22–01
REVISIONS	

SHEET A2.2 OF 18 SHEETS

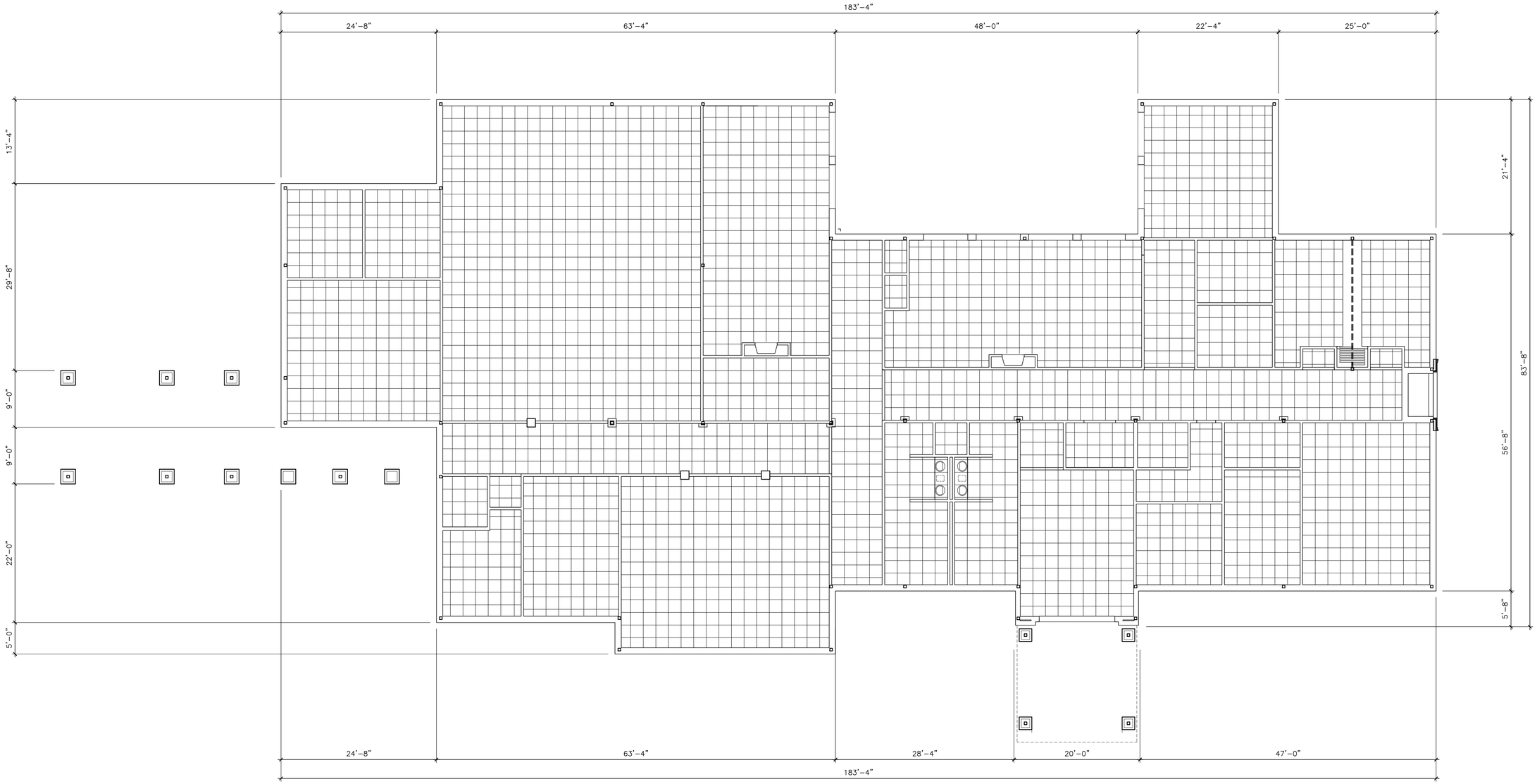

REFLECTED CEILING PLAN

SCALE: 1/8" = 1'-0"

STATE OF ALABAMA
THOMAS M. McELRATH
3072
GADSDEN, ALABAMA
REGISTERED ARCHITECT

THOMAS M. McELRATH, ARCHITECT
ARCHITECTURE and SPACE PLANNING
717 MERIT SPRINGS ROAD
GADSDEN, ALABAMA 35901
PHONE: (256) 490-8244
EMAIL: TOM@TMM-ARCHITECT.COM

A NEW SENIOR WELLNESS CENTER
at
2829 W. Meighan Boulevard
for
THE CITY of GADSDEN, ALABAMA

REFLECTED CEILING PLAN

DRAWN	TMM
CHECKED	TMM
SCALE	AS NOTED
DATE	SEPTEMBER 15, 2022
FILE	A2.3_RCP.dwg
JOB NO.	22-01
REVISIONS	

SHEET A2.3 OF 18 SHEETS

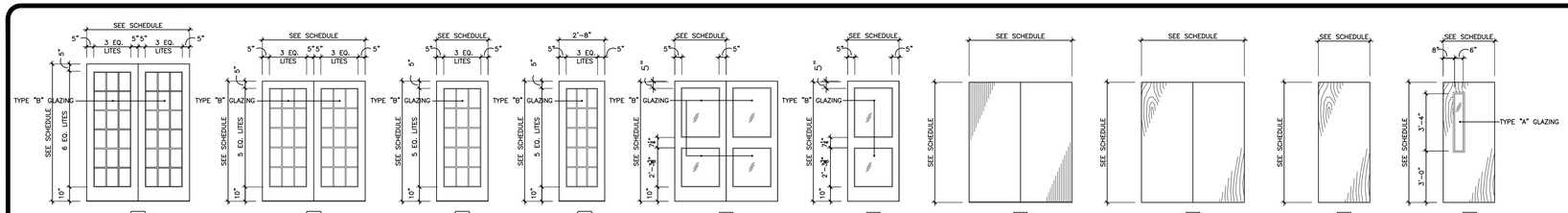

WIDE STILE ALUMINUM DOORS W/ INSUL. GLASS & 3/4" WIDE BETWEEN-THE-GLASS MUNTINS AS SPECIFIED

WIDE STILE SIDELIGHT W/ INSUL. GLASS & 3/4" WIDE BETWEEN-THE-GLASS MUNTINS AS SPECIFIED

WIDE STILE ALUM. DOORS – SEE SPECIFICATIONS

WIDE STILE ALUM. DOORS – SEE SPECIFICATIONS

FLUSH HOLLOW METAL DOOR IN GAUGE AS SPECIFIED

PRE-FINISHED FLUSH SOLID-CORE WD DOORS W/ FACE VENEER AS SPECIFIED

PRE-FINISHED FLUSH SOLID-CORE WD DOOR W/ FACE VENEER AS SPECIFIED

PRE-FINISHED FLUSH SOLID-CORE WD DOOR W/ FACE VENEER AS SPECIFIED

SCHEDULE of GLAZING TYPES for DOORS & SIDELITES	
TYPE	DESCRIPTION
A	1/4" TH. "CLEAR" TEMPERED SAFETY GLASS AS SPECIFIED.
B	1" TH. "CLEAR" TEMPERED INSULATING GLASS with "LOW E" COATING AS SPECIFIED.
C	1" TH. "CLEAR" INSULATING GLASS with "LOW E" COATING AS SPECIFIED.

DOOR TYPE ELEVATIONS

SCALE: 1/4" = 1'-0"

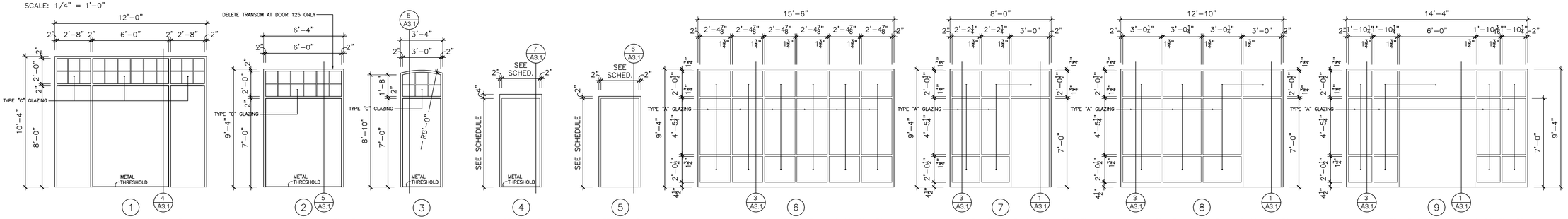

1 — ALUMINUM ENTRANCE FRAME WITH SIDE-LIGHTS AND TRANSOM, INSUL. GLASS & 3/4" WIDE BETWEEN-THE-GLASS MUNTINS AS SPECIFIED

2 — ALUMINUM ENTRANCE FRAME WITH TRANSOM, INSUL. GLASS & 3/4" WIDE BETWEEN-THE-GLASS MUNTINS AS SPECIFIED

3 — ALUMINUM ENTRANCE FRAME WITH CIRCULAR TRANSOM, INSUL. GLASS & 3/4" WIDE BETWEEN-THE-GLASS MUNTINS AS SPECIFIED

4 — H'MET. FRAME IN GAUGE AS SPEC.

5 — H'MET. FRAME IN GAUGE AS SPEC.

6 — ALUMINUM FRAME WITH GLAZING AS SCHEDULED SOUTH WALL OF CRAFT/CARDS 117

7 — ALUMINUM FRAME WITH GLAZING AS SCHEDULED WEST WALL OF EXCERCISE/WEIGHTS 114

8 — ALUMINUM FRAME WITH GLAZING AS SCHEDULED WEST WALL OF CRAFT/CARDS 115 at DOOR 115 WEST WALL OF CRAFT/CARDS 115 at DOOR 115A SIM. but OPP. HAND

9 — ALUMINUM FRAME WITH GLAZING AS SCHEDULED SOUTH WALL OF BILLARD/CARDS 120

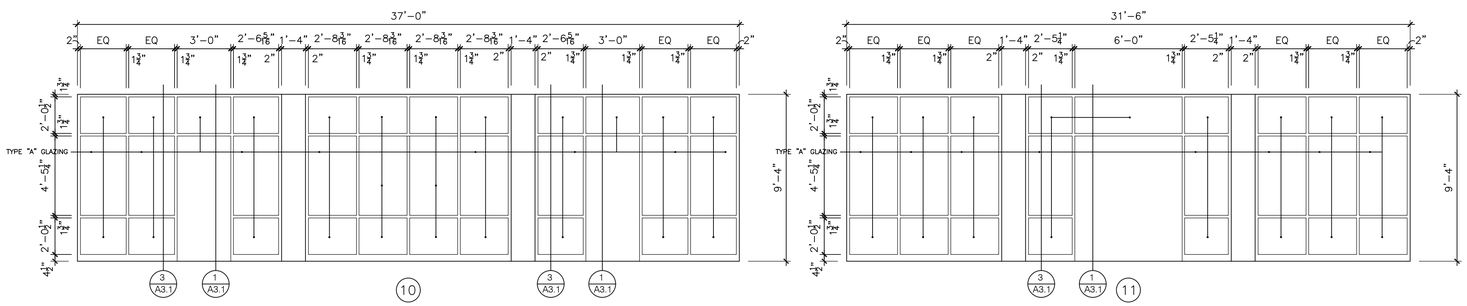

10 — ALUMINUM FRAME WITH GLAZING AS SCHEDULED WEST WALL OF MULTI-PURPOSE ROOM 121

11 — ALUMINUM FRAME WITH GLAZING AS SCHEDULED EAST WALL OF SENIOR NUTRITION 129

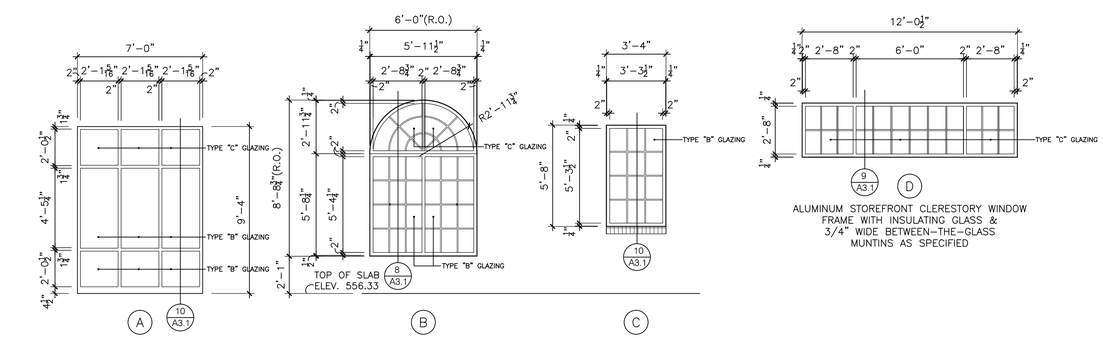

A — ALUMINUM FRAME WITH GLAZING AS SCHEDULED EAST WALL OF SENIOR NUTRITION 130 SOUTH WALL BILLIARDS/CARDS 120 NORTH WALL EXCERCISE/WEIGHTS 114

B — ALUMINUM STOREFRONT WINDOW FRAME WITH CIRCULAR TRANSOM, INSULATING GLASS & 3/4" WIDE BETWEEN-THE-GLASS MUNTINS AS SPECIFIED

C — ALUMINUM STOREFRONT WINDOW FRAME WITH INSULATING GLASS & 3/4" WIDE BETWEEN-THE-GLASS MUNTINS AS SPECIFIED

ALUMINUM STOREFRONT CLERESTORY WINDOW FRAME WITH INSULATING GLASS & 3/4" WIDE BETWEEN-THE-GLASS MUNTINS AS SPECIFIED

SCHEDULE of DOOR and WINDOW FRAME TYPES

SCALE: 1/4" = 1'-0"

SCHEDULE of DOORS and FRAMES												
DOORS						FRAMES					MISC.	
MARK	TYPE	SIZE			MATERIAL	TYPE	DETAILS			MATERIAL	FIRE RATING	REMARKS
		WIDTH	HGT.	THICK			HEAD	JAMB	SILL			
100	A	6'-0"	8'-0"	1 3/4"	ALUM.	*1	4/A3.1	4/A3.1	4/A3.1	ALUM.	NONE	*TYPE "D" DOOR IS SIDELIGHT FOR THIS FRAME
100A	J	3'-0"	7'-0"	–	WOOD	5	6/A3.1	6/A3.1	6/A3.1	H.M.	NONE	
101	J	3'-0"	7'-0"	–	WOOD	5	6/A3.1	6/A3.1	6/A3.1	H.M.	NONE	
102	J	3'-0"	7'-0"	–	WOOD	5	6/A3.1	6/A3.1	6/A3.1	H.M.	NONE	
103	J	3'-0"	7'-0"	–	WOOD	5	6/A3.1	6/A3.1	6/A3.1	H.M.	NONE	
104	J	3'-0"	7'-0"	–	WOOD	5	6/A3.1	6/A3.1	6/A3.1	H.M.	NONE	
105	I	3'-0"	7'-0"	–	WOOD	5	6/A3.1	6/A3.1	6/A3.1	H.M.	NONE	
107	I	3'-0"	7'-0"	–	WOOD	5	6/A3.1	6/A3.1	6/A3.1	H.M.	NONE	
109	C	3'-0"	7'-0"	–	ALUM.	3	5/A3.1	5/A3.1	5/A3.1	ALUM.	NONE	
110	J	3'-0"	7'-0"	–	WOOD	5	6/A3.1	6/A3.1	6/A3.1	H.M.	NONE	
111	J	3'-0"	7'-0"	–	WOOD	5	6/A3.1	6/A3.1	6/A3.1	H.M.	NONE	
112	I	3'-0"	7'-0"	–	WOOD	5	6/A3.1	6/A3.1	6/A3.1	H.M.	NONE	
113	I	3'-0"	7'-0"	–	WOOD	5	6/A3.1	6/A3.1	6/A3.1	H.M.	NONE	
114	F	3'-0"	7'-0"	–	ALUM.	7	1/A3.1	1/A3.1	1/A3.1	ALUM.	NONE	
115	F	3'-0"	7'-0"	–	ALUM.	8	1/A3.1	1/A3.1	1/A3.1	ALUM.	NONE	
115A	F	3'-0"	7'-0"	–	ALUM.	8	1/A3.1	1/A3.1	1/A3.1	ALUM.	NONE	
116	I	3'-0"	7'-0"	–	WOOD	5	6/A3.1	6/A3.1	6/A3.1	H.M.	NONE	
117	I	3'-0"	7'-0"	–	WOOD	5	6/A3.1	6/A3.1	6/A3.1	H.M.	NONE	
118	B	6'-0"	7'-0"	–	ALUM.	2	5/A3.1	5/A3.1	5/A3.1	ALUM.	NONE	
119	H	6'-0"	7'-0"	–	WOOD	5	6/A3.1	6/A3.1	6/A3.1	H.M.	NONE	
120	E	6'-0"	7'-0"	–	ALUM.	9	1/A3.1	1/A3.1	1/A3.1	ALUM.	NONE	
121	F	3'-0"	7'-0"	–	ALUM.	10	1/A3.1	1/A3.1	1/A3.1	ALUM.	NONE	
121A	F	3'-0"	7'-0"	–	ALUM.	10	1/A3.1	1/A3.1	1/A3.1	ALUM.	NONE	
122	G	6'-0"	7'-0"	–	H.M.	4	7/A3.1	7/A3.1	7/A3.1	H.M.	NONE	
123	G	6'-0"	7'-0"	–	H.M.	4	7/A3.1	7/A3.1	7/A3.1	H.M.	NONE	
124	H	6'-0"	7'-0"	–	WOOD	5	6/A3.1	6/A3.1	6/A3.1	H.M.	NONE	
125	B	6'-0"	7'-0"	–	ALUM.	*2	5/A3.1	5/A3.1	5/A3.1	ALUM.	NONE	*DELETE TRANSOM AT THIS DOOR
126	I	3'-0"	7'-0"	–	WOOD	5	6/A3.1	6/A3.1	6/A3.1	H.M.	NONE	
127	J	3'-0"	7'-0"	–	WOOD	5	6/A3.1	6/A3.1	6/A3.1	H.M.	NONE	
128	J	3'-0"	7'-0"	–	WOOD	5	6/A3.1	6/A3.1	6/A3.1	H.M.	NONE	
129	E	6'-0"	7'-0"	–	ALUM.	11	1/A3.1	1/A3.1	1/A3.1	ALUM.	NONE	
130	B	6'-0"	7'-0"	–	ALUM.	2	5/A3.1	5/A3.1	5/A3.1	ALUM.	NONE	
131	I	3'-0"	7'-0"	–	WOOD	5	6/A3.1	6/A3.1	6/A3.1	H.M.	NONE	
132	I	3'-0"	7'-0"	–	WOOD	5	6/A3.1	6/A3.1	6/A3.1	H.M.	NONE	
133	I	3'-0"	7'-0"	–	WOOD	5	6/A3.1	6/A3.1	6/A3.1	H.M.	NONE	

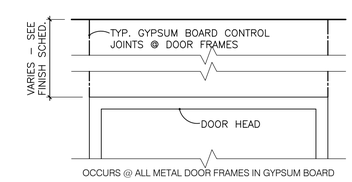

OCCURS @ ALL METAL DOOR FRAMES IN GYPSUM BOARD

STATE OF ALABAMA
THOMAS M. McELRATH
3072
GADSDEN, ALABAMA
REGISTERED ARCHITECT

THOMAS M. McELRATH, ARCHITECT
ARCHITECTURE and SPACE PLANNING
717 MERIT SPRINGS ROAD
GADSDEN, ALABAMA 35901
PHONE: (256) 490-8244
EMAIL: TOM@TMM-ARCHITECT.COM

A NEW SENIOR WELLNESS CENTER
at
2829 W. Meighan Boulevard
for
THE CITY of GADSDEN, ALABAMA

SCHEDULES and DETAILS

SHEET ONE

DRAWN	
CHECKED	
SCALE	AS NOTED
DATE	SEPTEMBER 15, 2022
FILE	A3.0_S&D One.dwg
JOB NO.	22-01
REVISIONS	

SHEET A3.0 OF 18 SHEETS

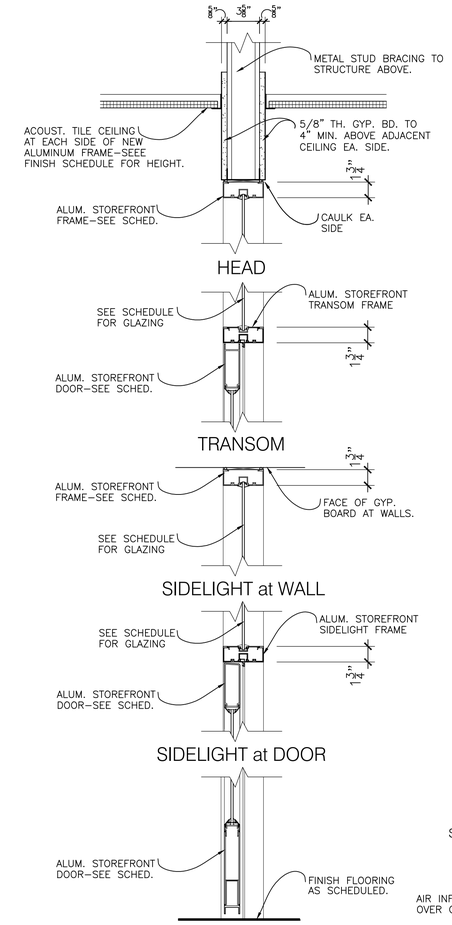

SECTION 1 / A3.1 thru INTERIOR ALUMINUM STOREFRONT FRAME at DOOR
SC: 1 1/2"= 1'-0"

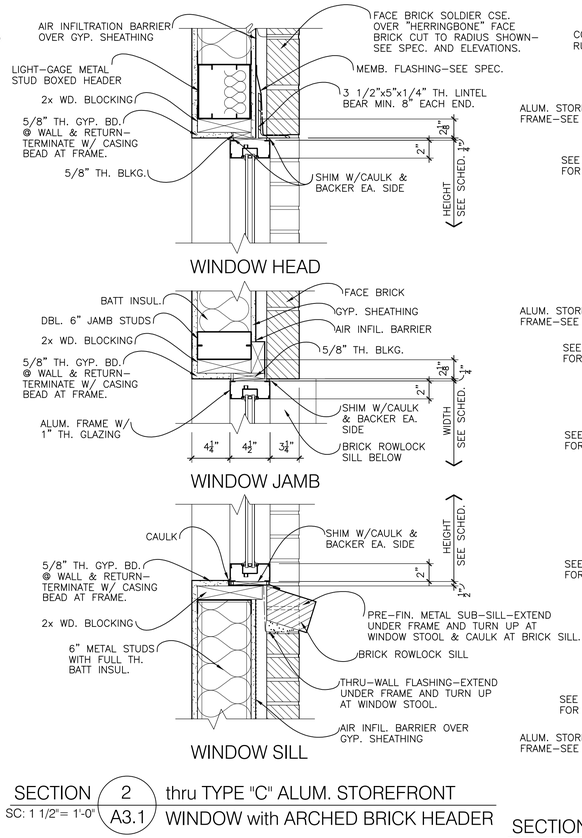

SECTION 2 / A3.1 thru TYPE "C" ALUM. STOREFRONT WINDOW with ARCHED BRICK HEADER
SC: 1 1/2"= 1'-0"

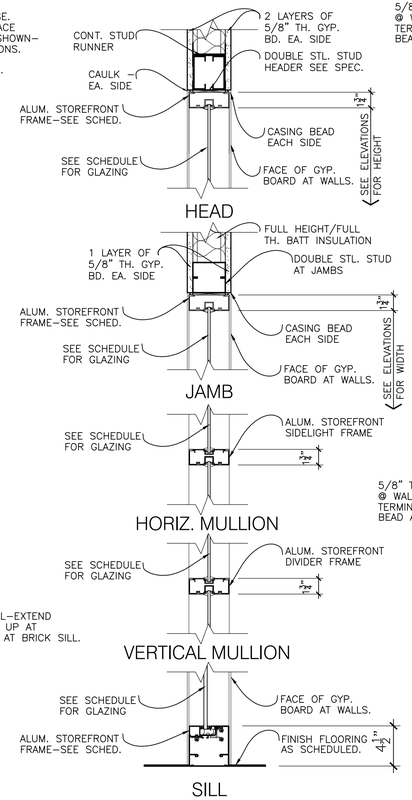

SECTION 3 / A3.1 thru TYPICAL INTERIOR ALUM. STOREFRONT WINDOW WALL
SC: 1 1/2"= 1'-0"

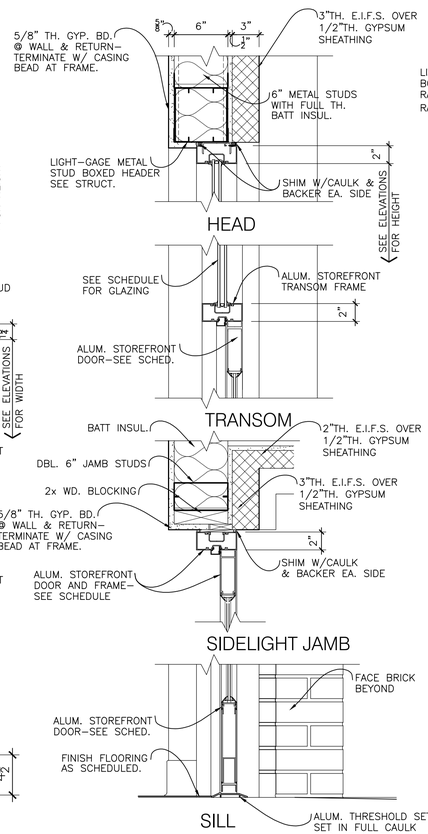

SECTION 4 / A3.1 thru ENTRANCE DOOR 100
SC: 1 1/2"= 1'-0"

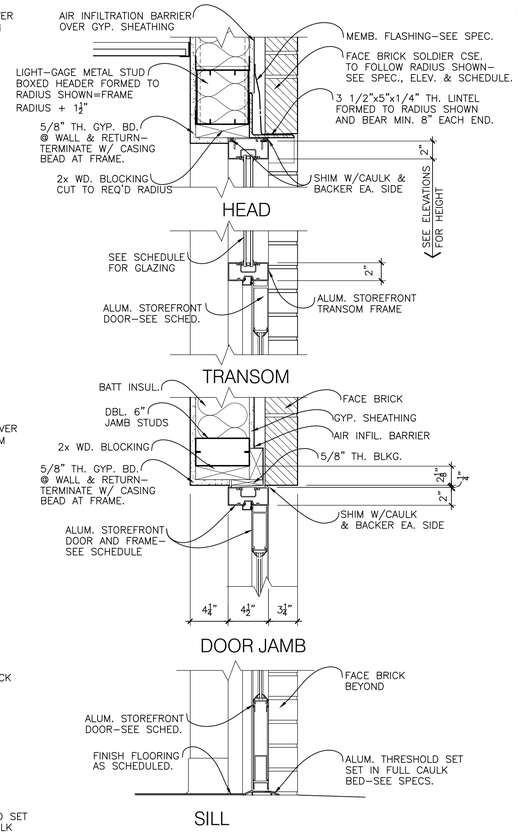

SECTION 5 / A3.1 thru DOOR 109
SC: 1 1/2"= 1'-0"
DOORS 118 and 130 sim. but w.o. RADIUS TRANSOM
DOOR 125 sim. but without TRANSOM

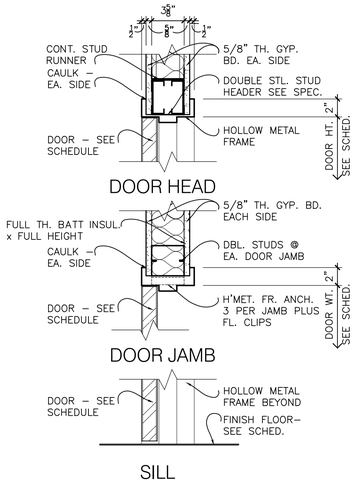

SECTION 6 / A3.1 thru DOOR FRAMES in TYPICAL METAL STUDS w/ DRYWALL
SC: 1 1/2"= 1'-0"

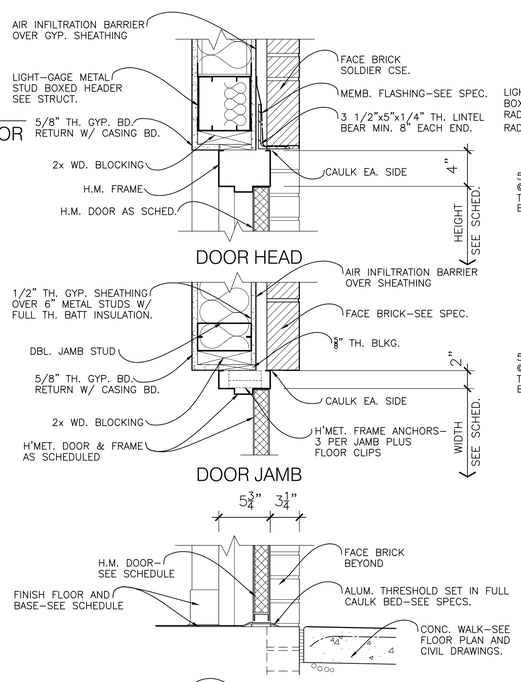

SECTION 7 / A3.1 thru DOORS 122 and 123
SC: 1 1/2"= 1'-0"

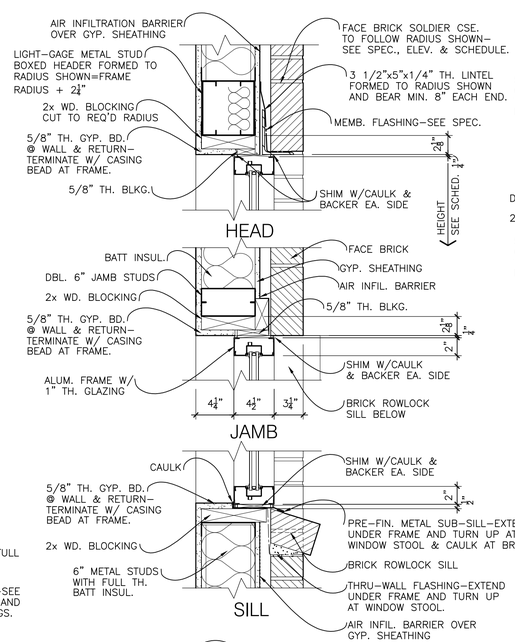

SECTION 8 / A3.1 thru WINDOW TYPE "B"
SC: 1 1/2"= 1'-0"

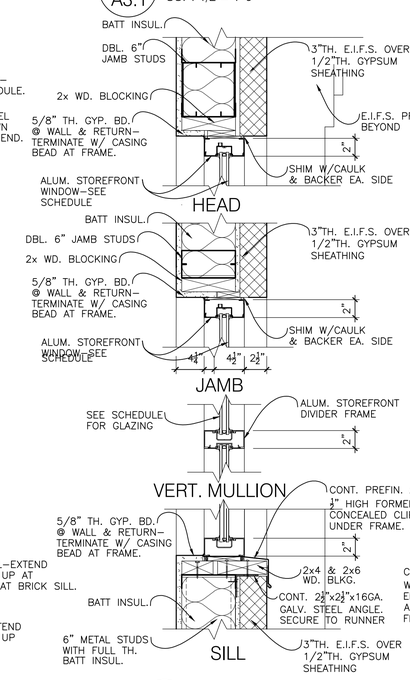

SECTION 9 / A3.1 thru WINDOW TYPE "D"
SC: 1 1/2"= 1'-0"

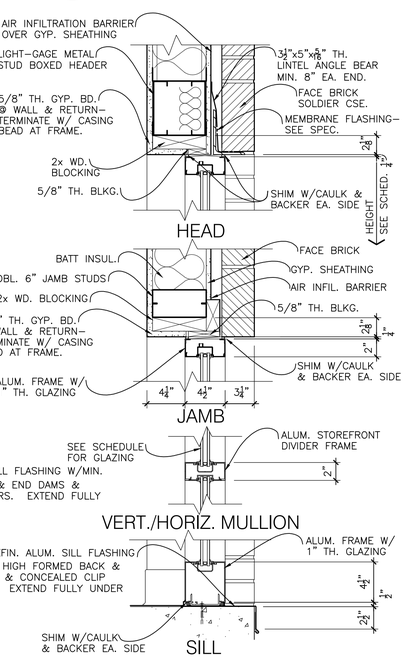

SECTION 10 / A3.1 thru WINDOW TYPE "A"
SC: 1 1/2"= 1'-0"

STATE OF ALABAMA
THOMAS M. McELRATH
3072
GADSDEN, ALABAMA
REGISTERED ARCHITECT

THOMAS M. McELRATH, ARCHITECT
ARCHITECTURE and SPACE PLANNING
717 MERIT SPRINGS ROAD
GADSDEN, ALABAMA 35901
PHONE: (256) 490-8244
EMAIL: TOM@TMM-ARCHITECT.COM

A NEW SENIOR WELLNESS CENTER
at
2829 W. Meighan Boulevard
for
THE CITY of GADSDEN, ALABAMA

SCHEDULES and DETAILS

SHEET TWO

DRAWN	
CHECKED	
SCALE	AS NOTED
DATE	SEPTEMBER 15, 2022
FILE	A3.1_S&D Two.dwg
JOB NO.	22–01
REVISIONS	

SHEET A3.1 OF 18 SHEETS

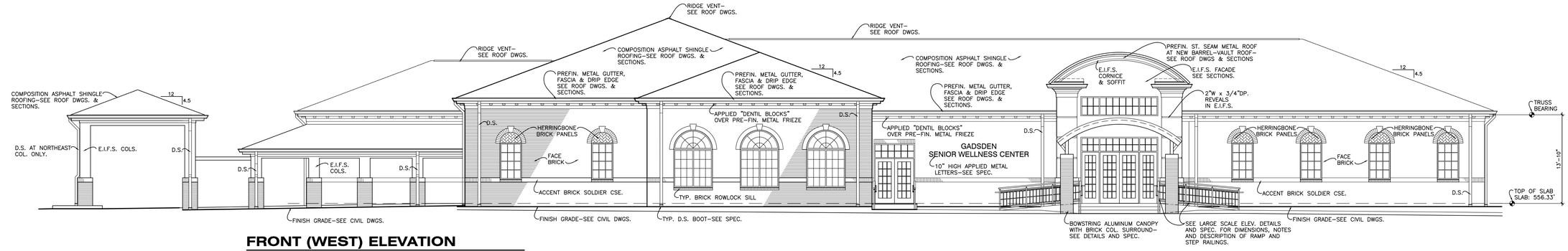

FRONT (WEST) ELEVATION

SCALE: 1/8"=1'-0"

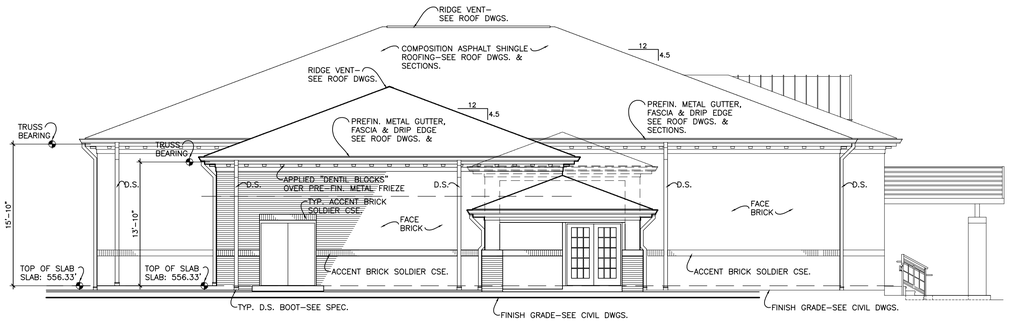

LEFT SIDE (NORTH) ELEVATION

SCALE: 1/8"=1'-0"

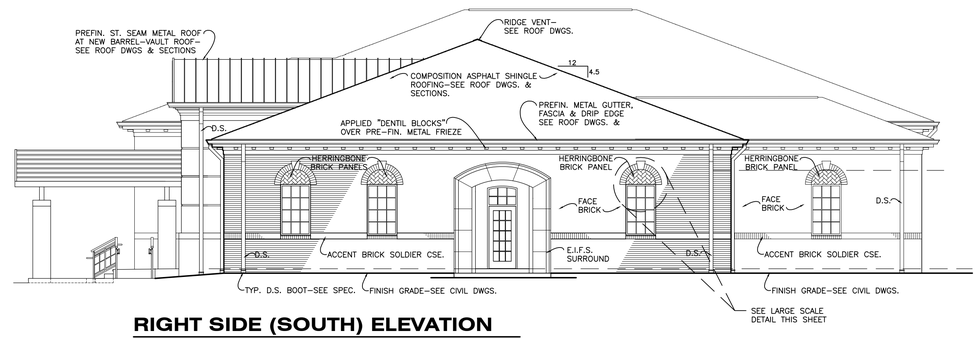

RIGHT SIDE (SOUTH) ELEVATION

SCALE: 1/8"=1'-0"

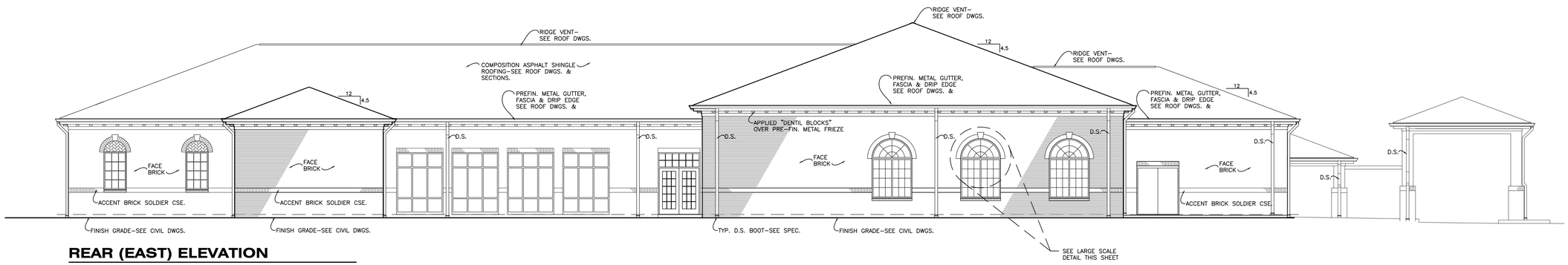

REAR (EAST) ELEVATION

SCALE: 1/8"=1'-0"

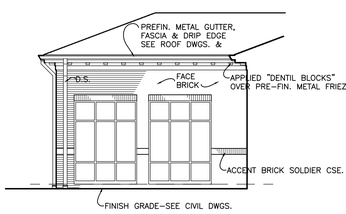

COURTYARD (NORTH) ELEVATION

SCALE: 1/8"=1'-0"

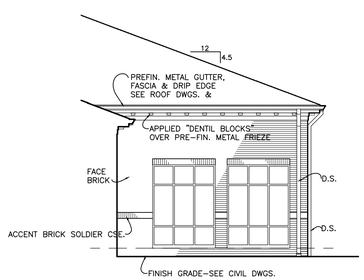

COURTYARD (SOUTH) ELEVATION

SCALE: 1/8"=1'-0"

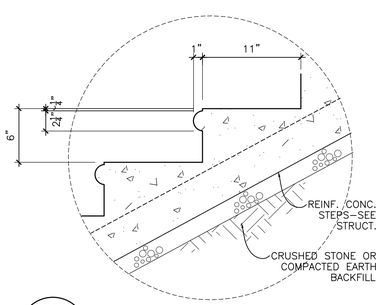

1 / A4.0 DETAIL at MAIN ENTRANCE STEPS

SCALE: 1½"=1'-0"

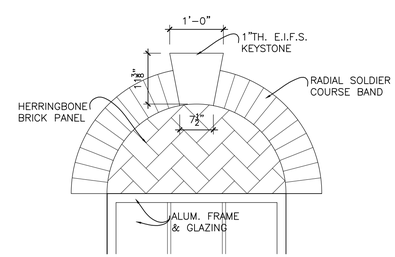

WINDOW TYPE "C"

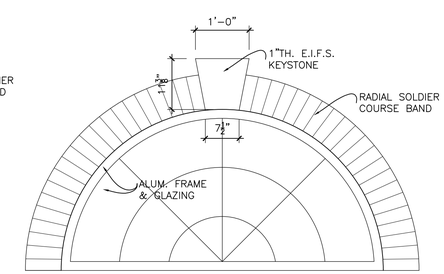

WINDOW TYPE "B"

TYPICAL E.I.F.S. KEYSTONE and RADIAL BRICK DETAILS

SCALE: 3/4" = 1'-0"

STATE OF ALABAMA
THOMAS M. McELRATH
3072
GADSDEN, ALABAMA
REGISTERED ARCHITECT

THOMAS M. McELRATH, ARCHITECT
ARCHITECTURE and SPACE PLANNING
717 MERIT SPRINGS ROAD
GADSDEN, ALABAMA 35901
PHONE: (256) 490-8244
EMAIL: TOM@TMM-ARCHITECT.COM

A NEW SENIOR WELLNESS CENTER
at
2829 W. Meighan Boulevard
for
THE CITY of GADSDEN, ALABAMA

ELEVATIONS

DRAWN	TMM
CHECKED	TMM
SCALE	AS NOTED
DATE	SEPTEMBER 15, 2022
FILE	A4.0_Elevations.dwg
JOB NO.	22–01
REVISIONS	

SHEET A4.0 OF 18 SHEETS

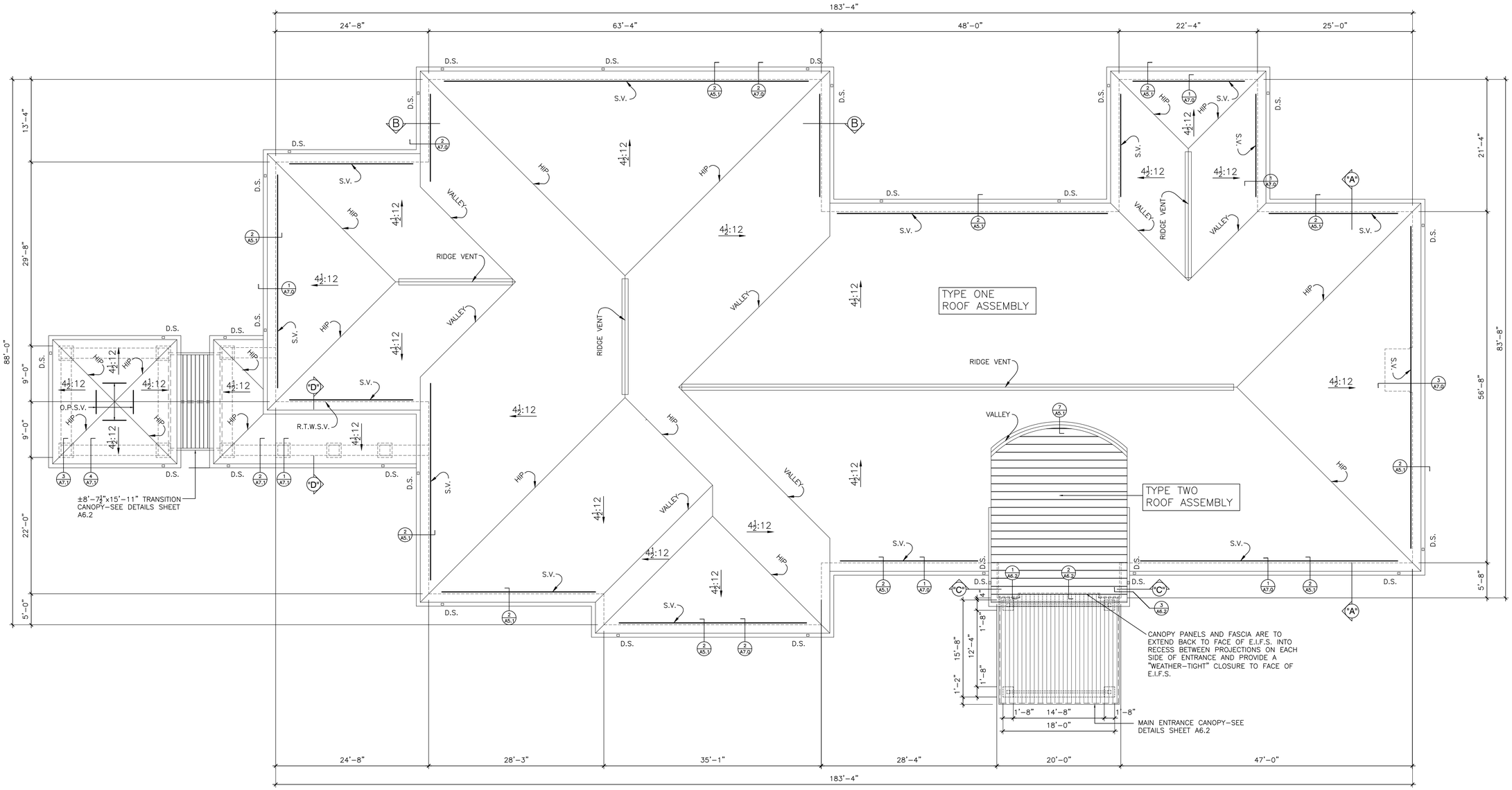

ROOF PLAN

SCALE: 1/8" = 1'-0"

PLAN NORTH

ROOF PENTETRATIONS NOTE:

SEE PLUMBING AND MECHANICAL ROOF PLAN FOR ALL PLUMBING AND MECHANICAL ROOF PENETRATIONS AND DETAILS.

DOWNSPOUT LOCATION COORDINATION:

COORDINATE ALL DOWNSPOUT LOCATIONS WITH CIVIL, ROOFING AND ELEVATIONS DRAWINGS. FINAL LOCATIONS SHALL BE CONFIRMED BY THE ARCHITECT AND CIVIL CONSULTANTS FOR PROPER FUNCTION AND TIE-IN AND WITH THE ARCHITECT FOR PROPER AESTHETICS.

ROOF ASSEMBLY:

ROOF ASSEMBLY "TYPE ONE":

ARCHITECTURAL COMPOSITION SHINGLES, OVER UNDERLAYMENT AS SPECIFIED, OVER NOM. 3/4" TH. PLYWOOD DECKING, OVER 7/8" DP. METAL HAT SECTIONS (APPLIED PERPENDICULAR TO METAL DECK RIBS), OVER 1 1/2" x 22 GA. TYPE "B" FLUTED METAL DECK (SEE STRUCT.), OVER LIGHT GAUGE STEEL TRUSSES AT 48" O.C. (MAXIMUM).

ROOF ASSEMBLY "TYPE TWO":

RADIUSED PRE-FIN. STANDING SEAM METAL ROOF PANELS, OVER UNDERLAYMENT AS SPECIFIED, OVER NOM. 5/8"" TH. RADIUSED PLYWOOD DECKING, OVER 7/8" DP. METAL HAT SECTIONS AT 16" O.C. (APPLIED PERPENDICULAR TO RADIUSED STEEL TUBE BEAM (SEE STRUCT.),

ROOF PLAN LEGEND:

V.S.T.R.	NEW PLUMBING VENT STACK – SEE PLUMBING DWGS. ALSO SEE A5.1 FOR FLASHING DETAILS.
D.S./B.	DOWNSPOUT & BOOT – SEE CIVIL DWGS. FOR CONTINUATION TO OUT-FALL.
E.F.R.C.	MECHANICAL EQUIPMENT/VENTS – SEE MECHANICAL DWGS. FOR CURB FLASHING DETAILS.
S.V.	SHINGLE-OVER ATTIC VENT – SEE SECTIONS.
R.T.W.S.V.	ROOF-TO-WALL SHINGLE-OVER ATTIC VENT – SEE SECTIONS.
O.P.S.V.	OFF-PEAK SHINGLE-OVER ATTIC VENT

STATE OF ALABAMA
THOMAS M. McELRATH
3072
GADSDEN, ALABAMA
REGISTERED ARCHITECT

THOMAS M. McELRATH, ARCHITECT
ARCHITECTURE and SPACE PLANNING
717 MERIT SPRINGS ROAD
GADSDEN, ALABAMA 35901
PHONE: (256) 490-8244
EMAIL: TOM@TMM-ARCHITECT.COM

A NEW SENIOR WELLNESS CENTER
at
2829 W. Meighan Boulevard
for
THE CITY of GADSDEN, ALABAMA

ROOF PLAN

DRAWN	AKS
CHECKED	TMM
SCALE	AS NOTED
DATE	SEPTEMBER 15, 2022
FILE	A5.0_Roof Plan.dwg
JOB NO.	22-01
REVISIONS	

SHEET A5.0 OF 18 SHEETS

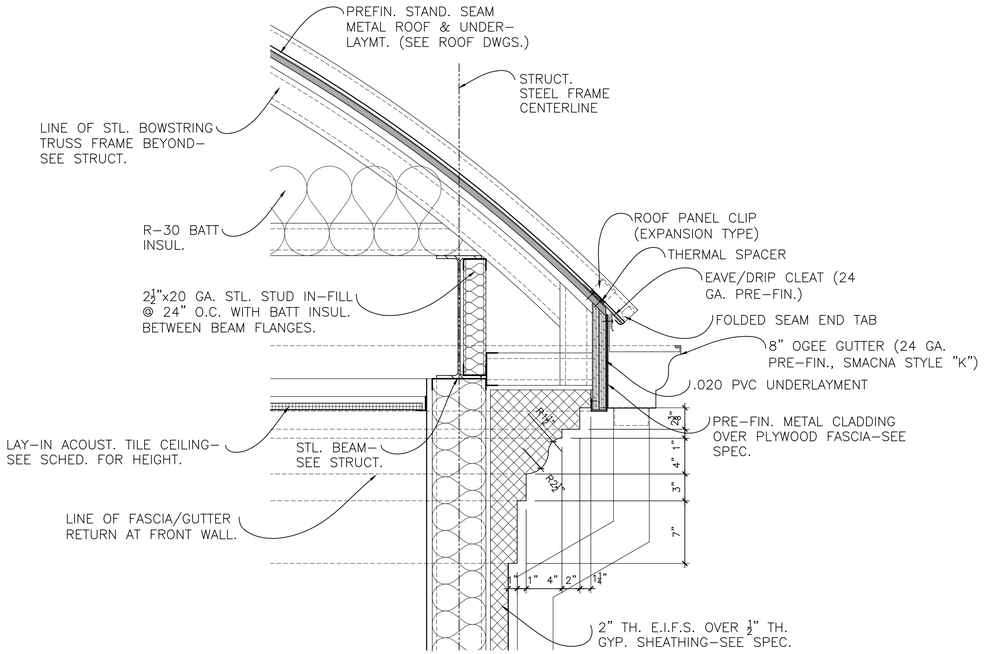

1 / A5.1 TYPICAL ROOF EAVE DETAIL at BOWSTRING TRUSS
SCALE: 1 1/2"=1'-0"

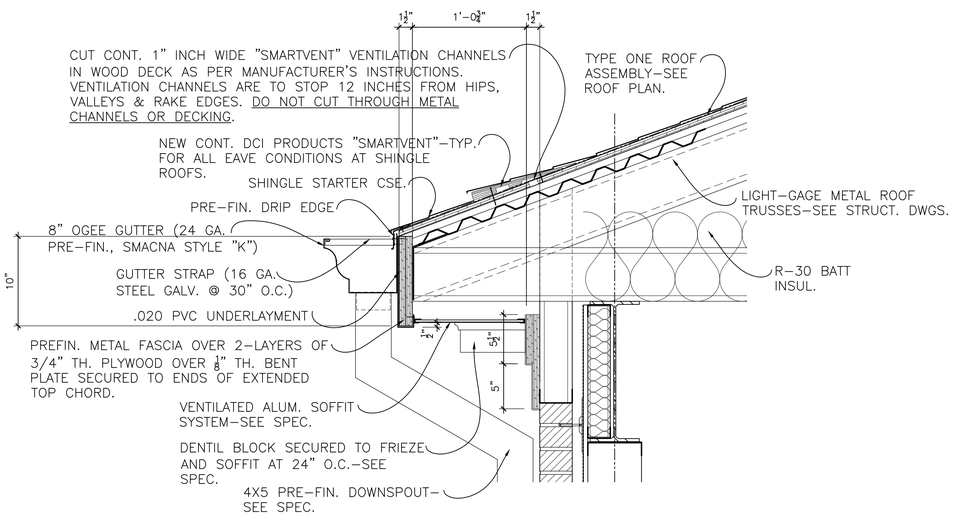

2 / A5.1 TYPICAL ROOF EAVE DETAIL
SCALE: 1 1/2"=1'-0"

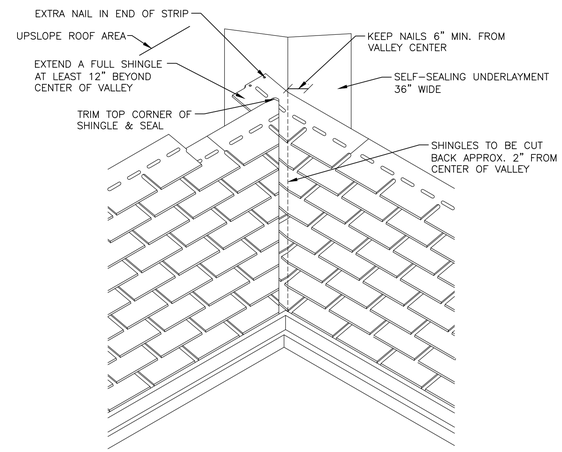

3 / A5.1 TYPICAL "CLOSED TYPE" VALLEY
SCALE: 3"=1'-0"

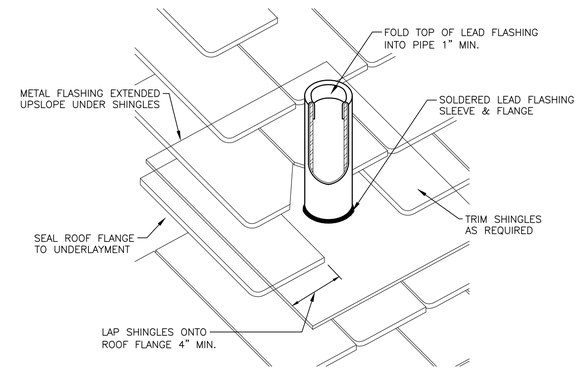

4 / A5.1 VENT/PIPE PENETRATION FLASHING
SCALE: 3"=1'-0"

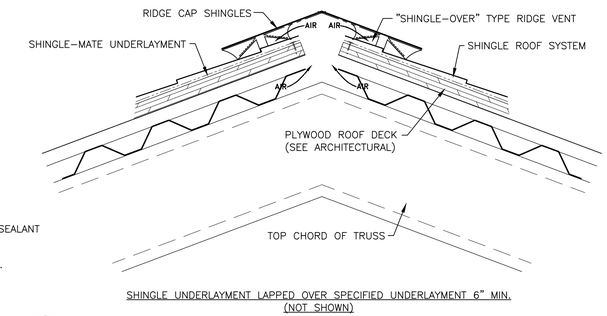

5 / A5.1 TYPICAL ROOF-OVER VENTING RIDGE CAP
SCALE: 3"=1'-0"

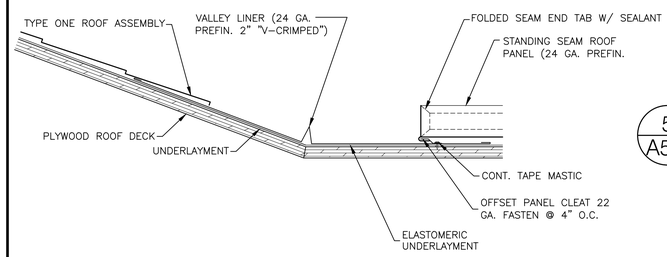

7 / A5.1 TYPE ONE to TYPE TWO ROOF ASSEMBLY VALLEY INTERFACE
SCALE: 3"=1'-0"

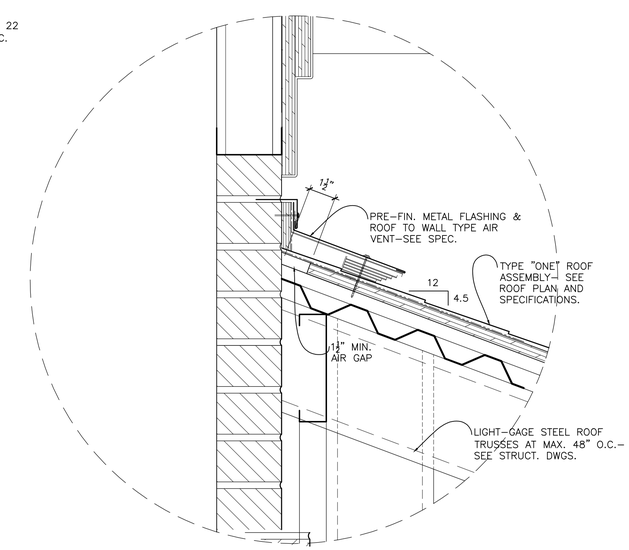

6 / A5.1 ROOF to WALL VENT FLASHING DETAIL
SCALE: 3"=1'-0"

STATE OF ALABAMA
THOMAS M. McELRATH
3072
GADSDEN, ALABAMA
REGISTERED ARCHITECT

THOMAS M. McELRATH, ARCHITECT
ARCHITECTURE and SPACE PLANNING
717 MERIT SPRINGS ROAD
GADSDEN, ALABAMA 35901
PHONE: (256) 490-8244
EMAIL: TOM@TMM-ARCHITECT.COM

A NEW SENIOR WELLNESS CENTER
at
2829 W. Meighan Boulevard
for
THE CITY of GADSDEN, ALABAMA

ROOF PLAN DETAILS

DRAWN	AKS
CHECKED	TMM
SCALE	AS NOTED
DATE	SEPTEMBER 15, 2022
FILE	A5.1_RP Details.dwg
JOB NO.	22-01
REVISIONS	

SHEET A5.1 OF 18 SHEETS

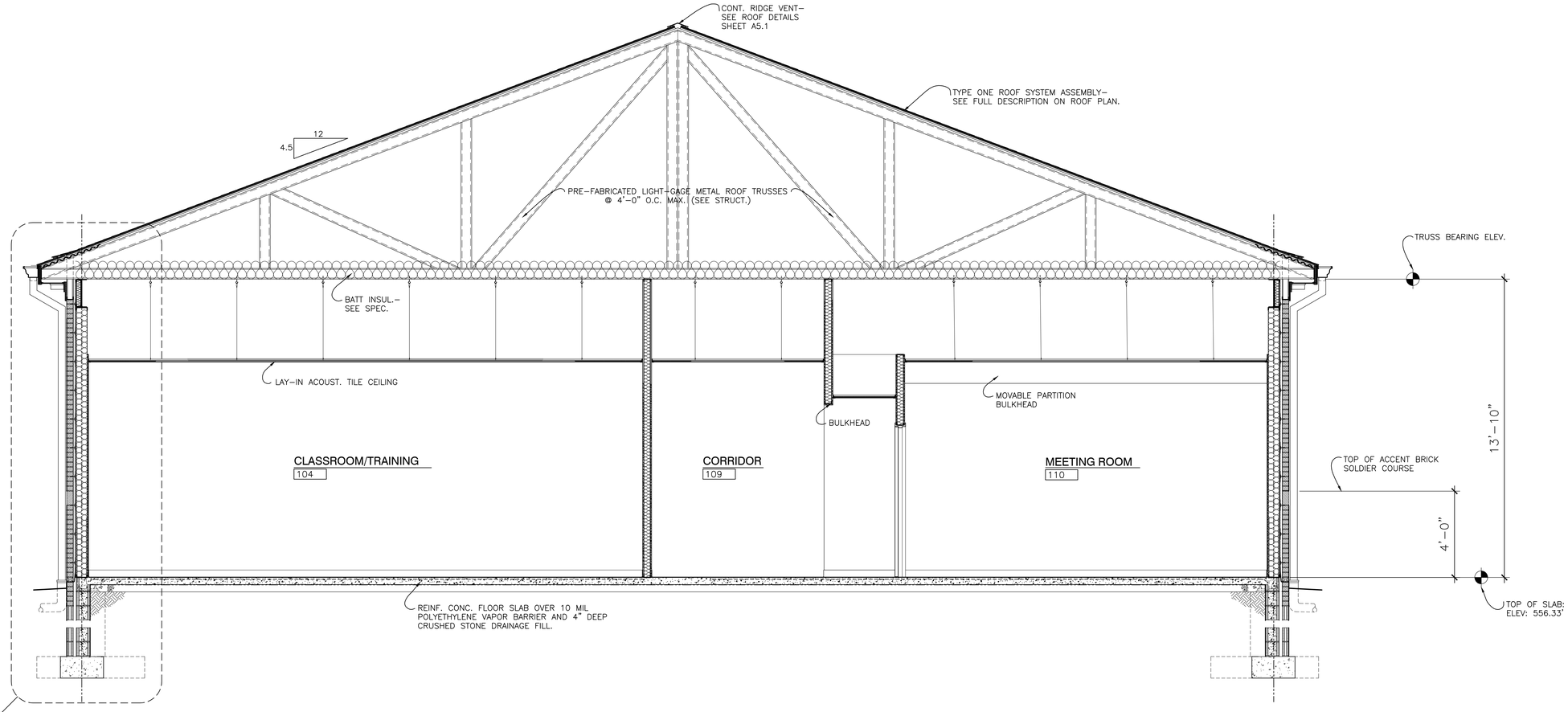

1 / A7.0

CROSS SECTION "A-A" through CLASSROOM/TRAINING and MEETING ROOMS

SCALE: 3/8" = 1'-0"

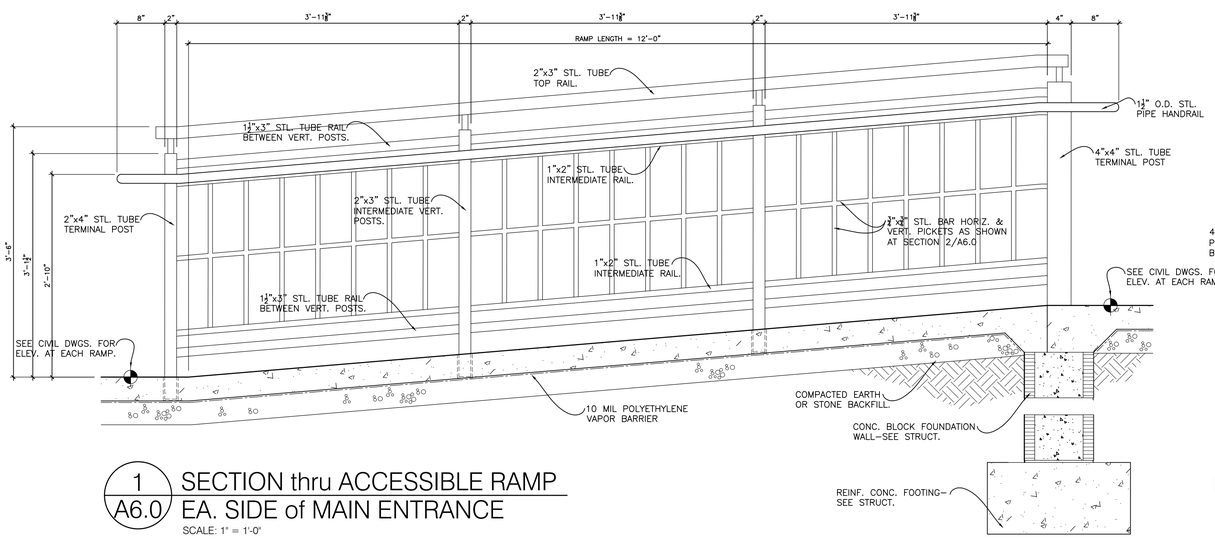

1 / A6.0

SECTION thru ACCESSIBLE RAMP EA. SIDE of MAIN ENTRANCE

SCALE: 1" = 1'-0"

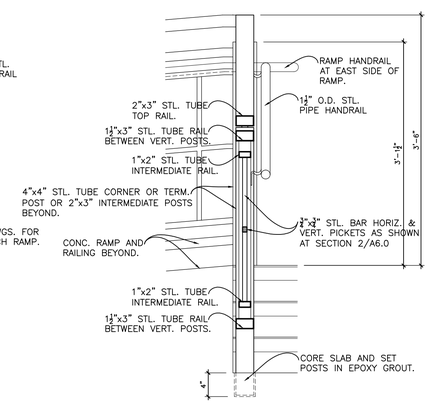

2 / A6.0

SECTION thru RAILING at EA. SIDE of ENTRANCE STEPS

SCALE: 1" = 1'-0"

RAMP RAILING SIMILAR

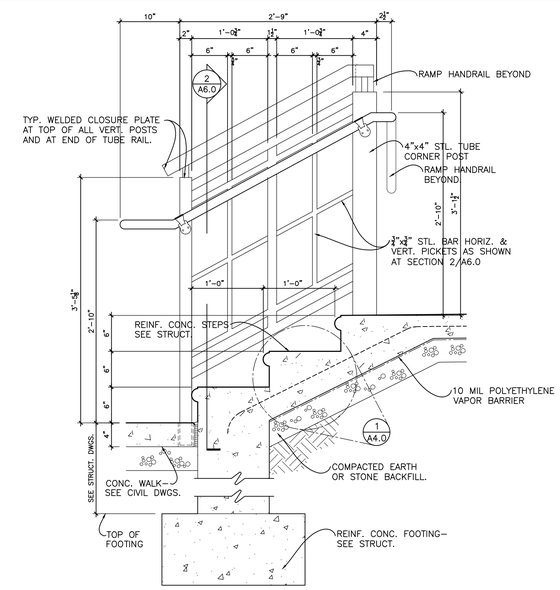

3 / A6.0

SECTION thru MAIN ENTRANCE STEPS

SCALE: 1" = 1'-0"

STATE OF ALABAMA
THOMAS M. McELRATH
3072
GADSDEN, ALABAMA
REGISTERED ARCHITECT

THOMAS M. McELRATH, ARCHITECT
ARCHITECTURE and SPACE PLANNING
717 MERIT SPRINGS ROAD
GADSDEN, ALABAMA 35901
PHONE: (256) 490-8244
EMAIL: TOM@TMM-ARCHITECT.COM

A NEW SENIOR WELLNESS CENTER
at
2829 W. Meighan Boulevard
for
THE CITY of GADSDEN, ALABAMA

CROSS SECTIONS

SHEET ONE

DRAWN	TMM
CHECKED	TMM
SCALE	AS NOTED
DATE	SEPTEMBER 15, 2022
FILE	A6.0_CS 1.dwg
JOB NO.	22–01
REVISIONS	

SHEET A6.0 OF 18 SHEETS

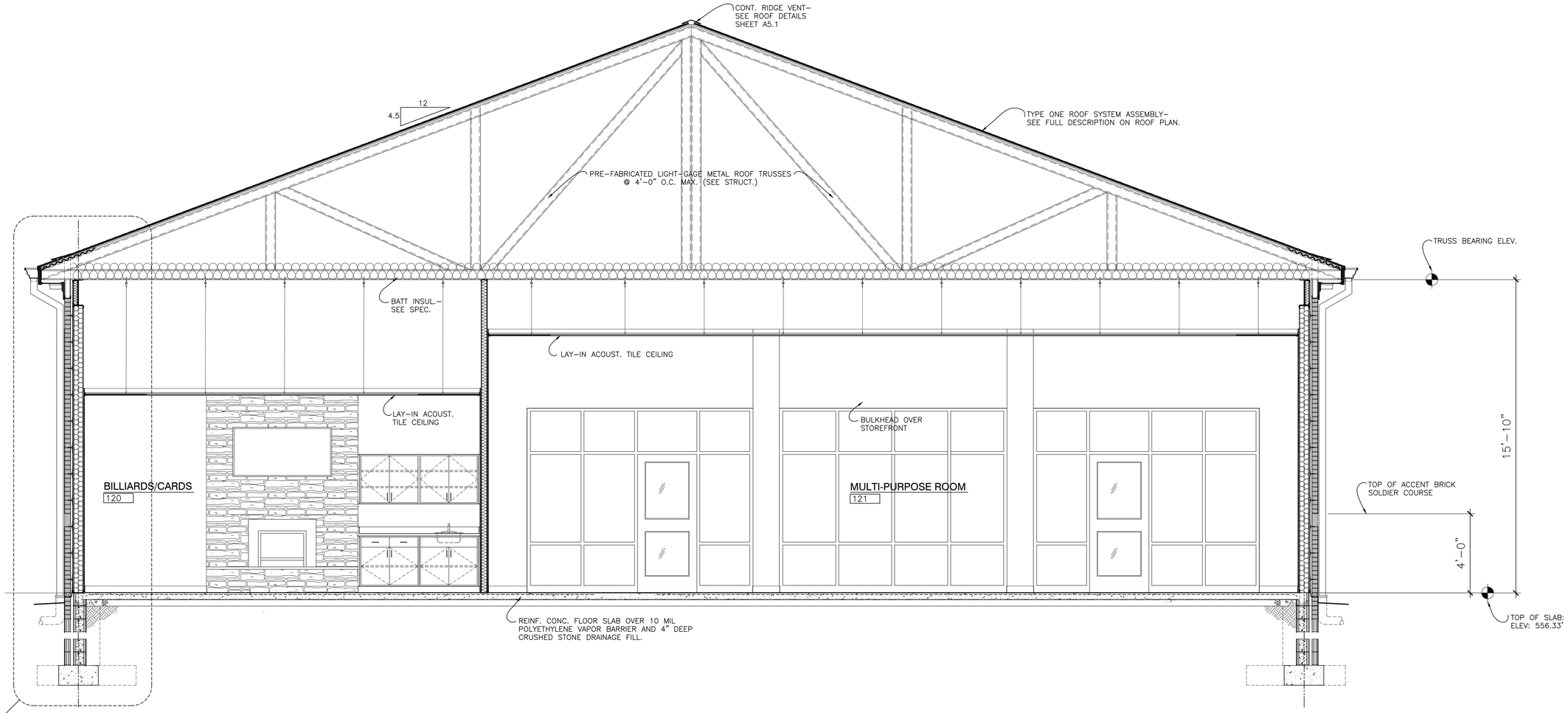

2 A7.0

CROSS SECTION "B-B" through BILLIARD/CARDS and MULTI-PURPOSE ROOM

SCALE: 3/8" = 1'-0"

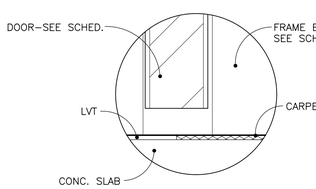

LVT TO CARPET

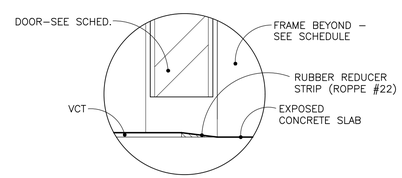

LVT TO EXPOSED CONCRETE

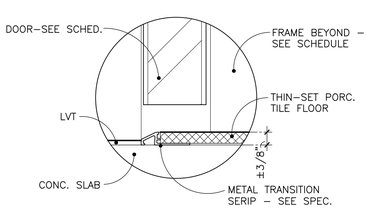

LVT TO PORCELAIN TILE

TYPICAL FINISH FLOORING TRANSITION DETAILS

SC: 6" = 1'-0"

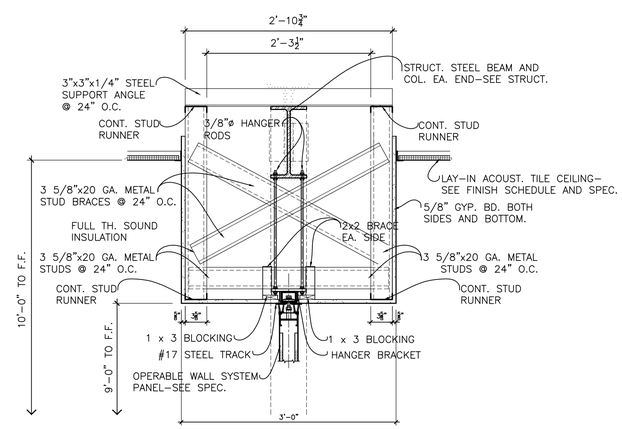

1 A6.1 OPERABLE PARTITION TRACK DETAIL

SCALE: 1" = 1'-0" OCCURS between MEETING ROOMS 110 and 111

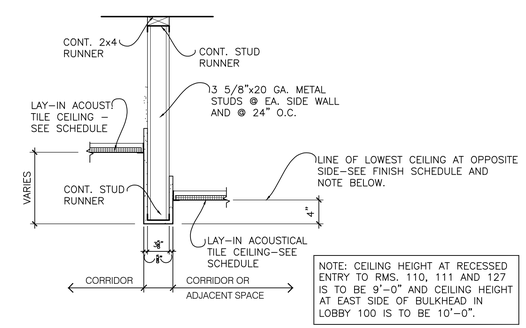

NOTE: CEILING HEIGHT AT RECESSED ENTRY TO RMS. 110, 111 AND 127 IS TO BE 9'–0" AND CEILING HEIGHT AT EAST SIDE OF BULKHEAD IN LOBBY 100 IS TO BE 10'–0".

2 A6.1 GYP. BOARD BULKHEAD at CEILING TRANSITION

SCALE: 1" = 1'-0" (SEE FLOOR PLAN for BULKHEAD LOCATIONS)

STATE OF ALABAMA
THOMAS M. McELRATH
3072
GADSDEN, ALABAMA
REGISTERED ARCHITECT

THOMAS M. McELRATH, ARCHITECT
ARCHITECTURE and SPACE PLANNING
717 MERIT SPRINGS ROAD
GADSDEN, ALABAMA 35901
PHONE: (256) 490-8244
EMAIL: TOM@TMM-ARCHITECT.COM

A NEW SENIOR WELLNESS CENTER
at
2829 W. Meighan Boulevard
for
THE CITY of GADSDEN, ALABAMA

CROSS SECTIONS

SHEET TWO

DRAWN	TMM
CHECKED	TMM
SCALE	AS NOTED
DATE	SEPTEMBER 15, 2022
FILE	A6.1_CS 2.dwg
JOB NO.	22–01
REVISIONS	

SHEET A6.1 OF 18 SHEETS

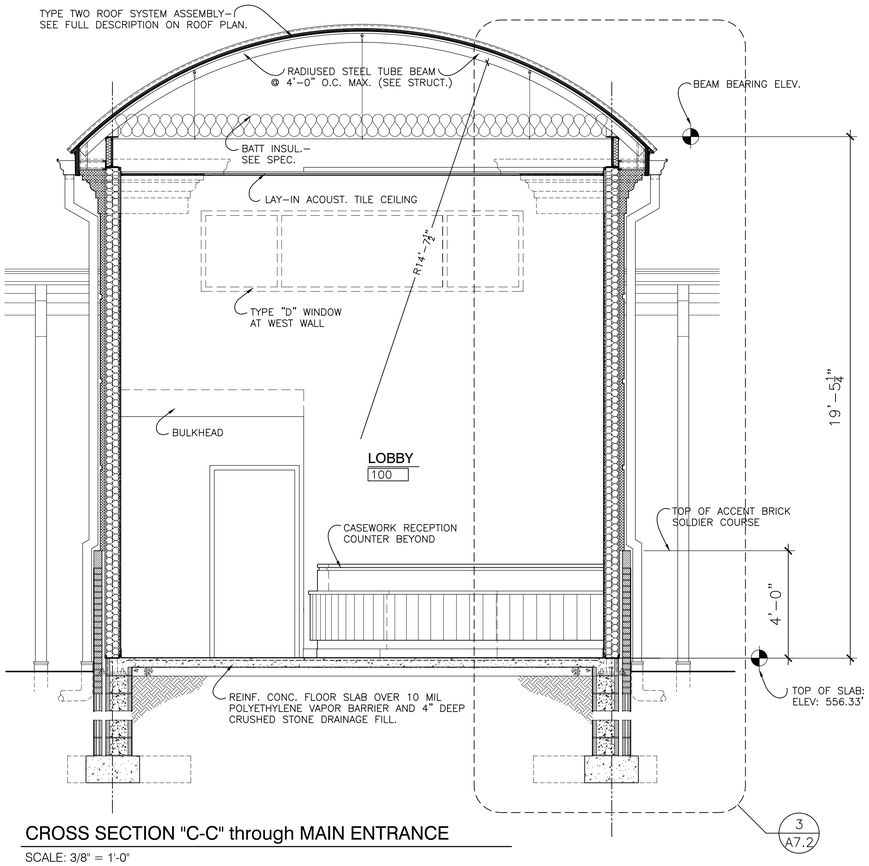

CROSS SECTION "C-C" through MAIN ENTRANCE

SCALE: 3/8" = 1'-0"

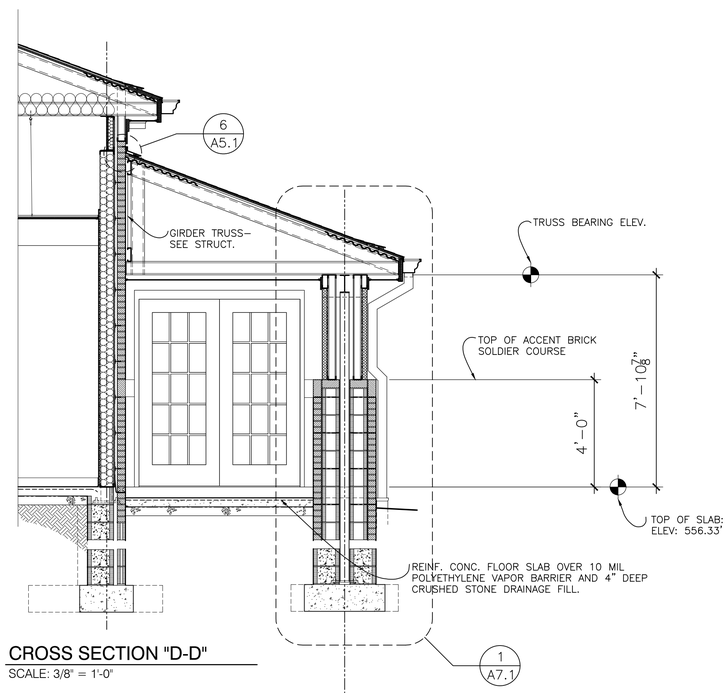

CROSS SECTION "D-D"

SCALE: 3/8" = 1'-0"

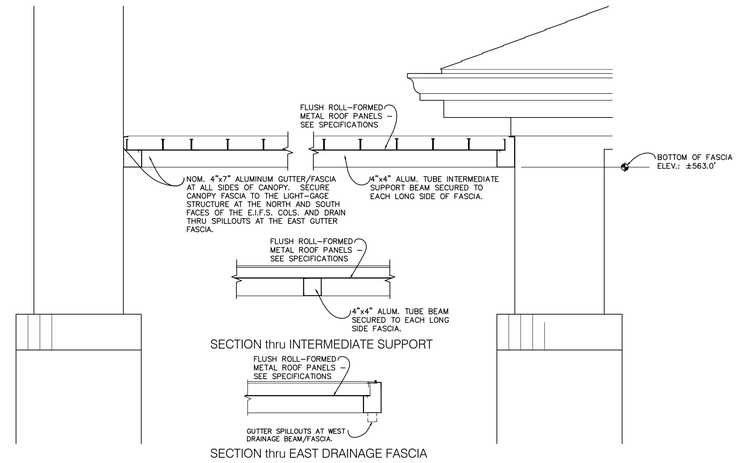

SECTION thru TRANSITION CANOPY at NORTH ENTRANCE

SCALE: 3/4" = 1'-0" SEE ROOF PLAN FOR LOCATION AND DIMENSIONS.

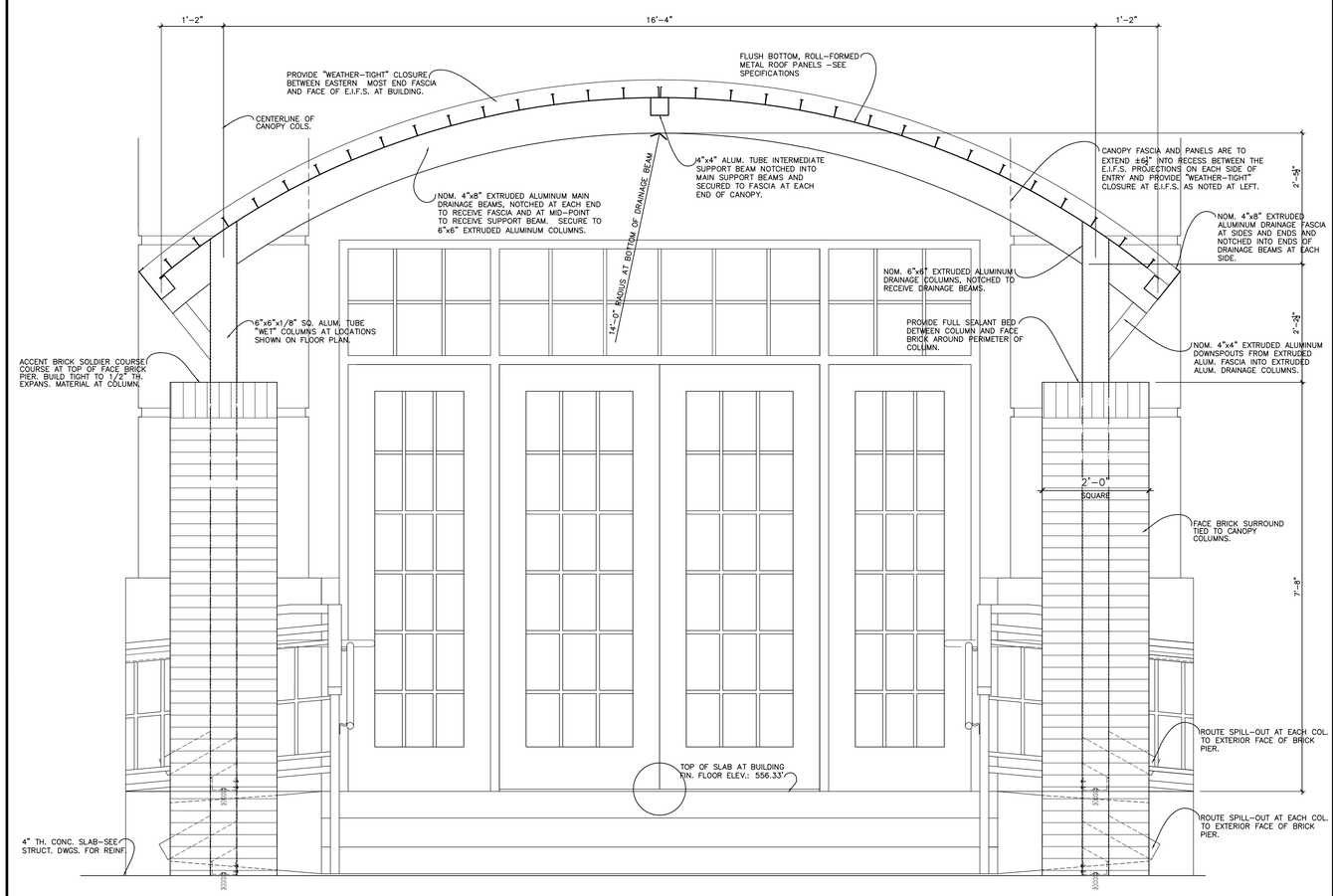

SECTION thru MAIN ENTRANCE BOWSTRING CANOPY

SCALE: 3/4" = 1'-0"

CANOPY COLUMN NOTE:
THE TWO EASTERN MOST COLUMNS AND FACE BRICK SURROUND AT THIS CANOPY AND THE RELATED DRAINAGE OUTLETS, SET AT FINISH FLOOR ELEVATION 556.33'. SEE CIVIL DWGS. FOR GRADE ELEVATION AT THE TWO WESTERN MOST COLUMNS.

STATE OF ALABAMA
THOMAS M. McELRATH
3072
GADSDEN, ALABAMA
REGISTERED ARCHITECT

THOMAS M. McELRATH, ARCHITECT
ARCHITECTURE and SPACE PLANNING
717 MERIT SPRINGS ROAD
GADSDEN, ALABAMA 35901
PHONE: (256) 490-8244
EMAIL: TOM@TMM-ARCHITECT.COM

A NEW SENIOR WELLNESS CENTER
at
2829 W. Meighan Boulevard
for
THE CITY of GADSDEN, ALABAMA

CROSS SECTIONS

SHEET THREE

DRAWN	TMM
CHECKED	TMM
SCALE	AS NOTED
DATE	SEPTEMBER 15, 2022
FILE	A6.2_CS 3.dwg
JOB NO.	22–01
REVISIONS	

SHEET A6.2 OF 18 SHEETS

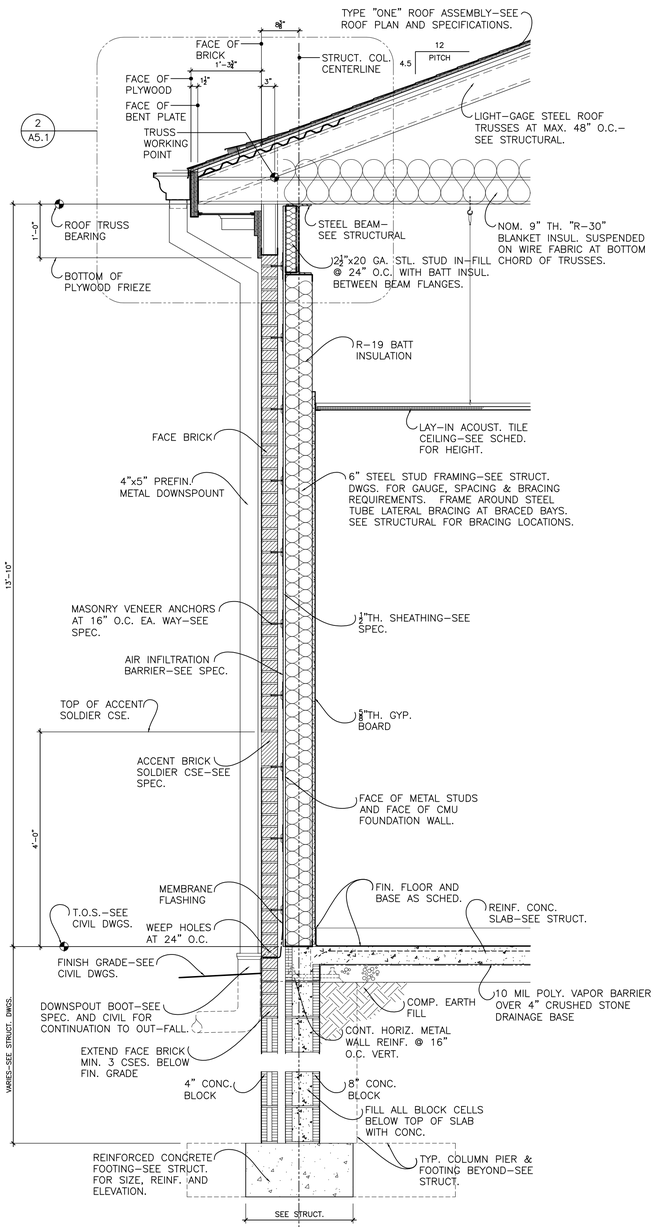

1 A7.0 WALL SECTION
SCALE: 3/4" = 1'-0"

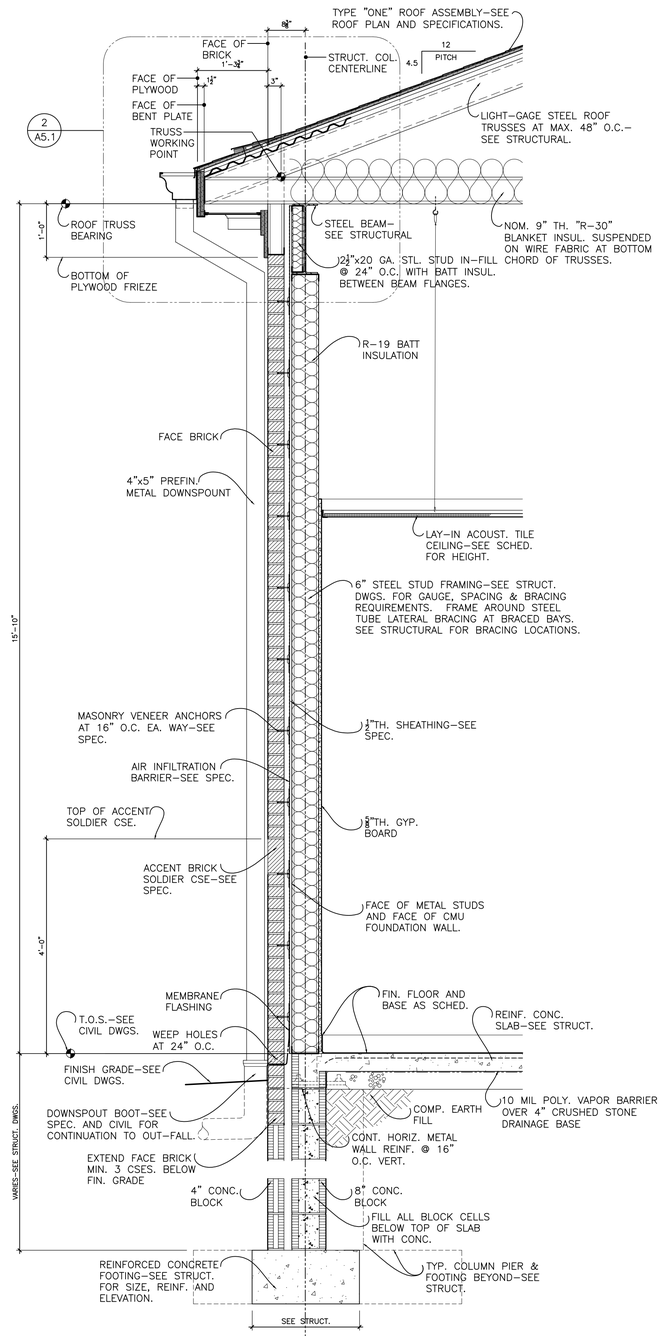

2 A7.0 WALL SECTION
SCALE: 3/4" = 1'-0"

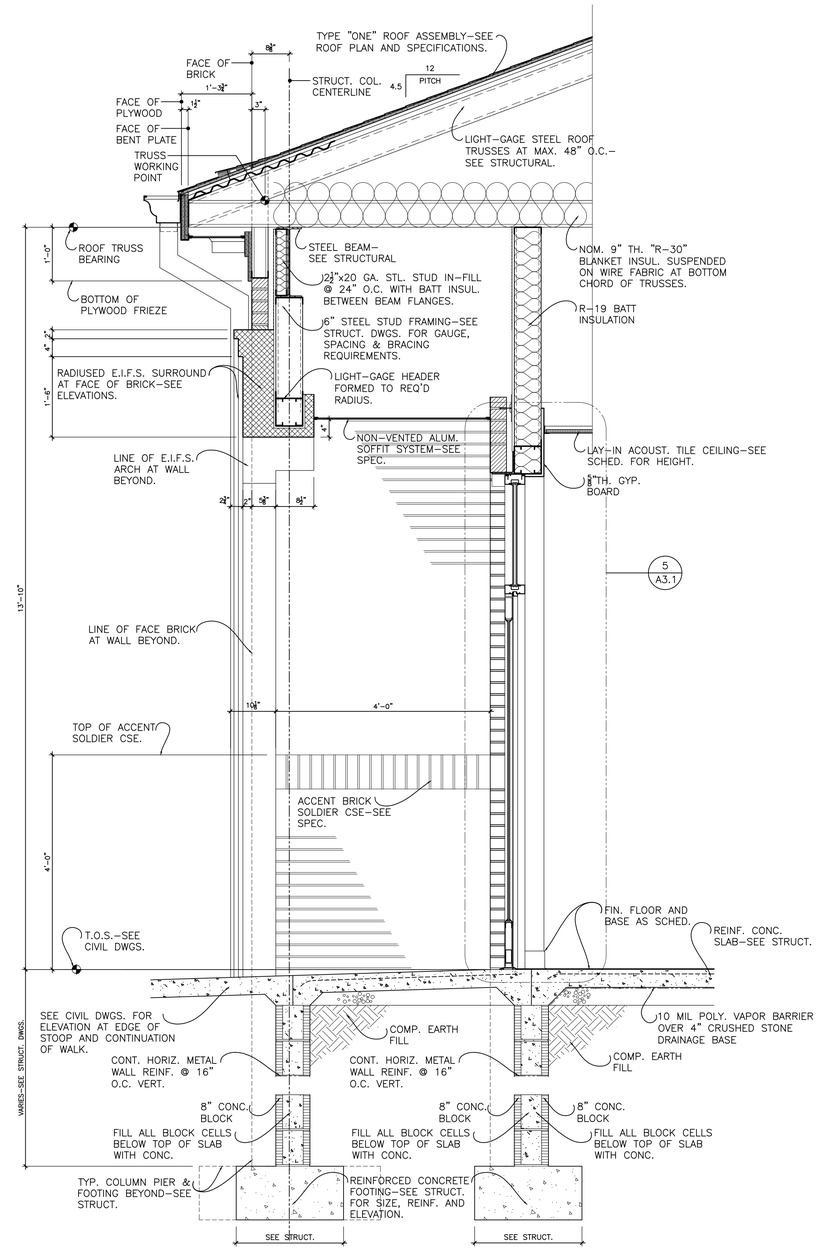

3 A7.0 WALL SECTION
SCALE: 3/4" = 1'-0"

STATE OF ALABAMA
THOMAS M. McELRATH
3072
GADSDEN, ALABAMA
REGISTERED ARCHITECT

THOMAS M. McELRATH, ARCHITECT
ARCHITECTURE and SPACE PLANNING
717 MERIT SPRINGS ROAD
GADSDEN, ALABAMA 35901
PHONE: (256) 490-8244
EMAIL: TOM@TMM-ARCHITECT.COM

A NEW SENIOR WELLNESS CENTER
at
2829 W. Meighan Boulevard
for
THE CITY of GADSDEN, ALABAMA

WALL SECTIONS

SHEET ONE

DRAWN	TMM
CHECKED	TMM
SCALE	AS NOTED
DATE	SEPTEMBER 15, 2022
FILE	A7.0_WS 1.dwg
JOB NO.	22–01
REVISIONS	

SHEET
A7.0
OF
18
SHEETS

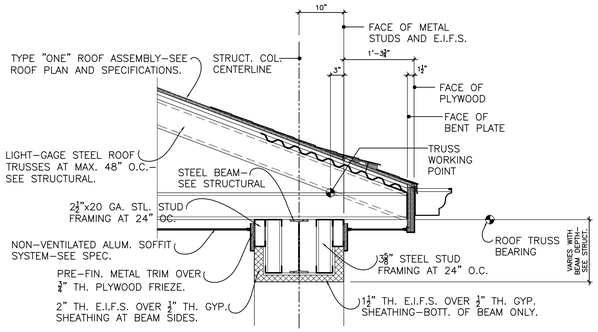

2 A7.1 SECTION thru BEAM at ARCADE
SCALE: 3/4" = 1'-0"

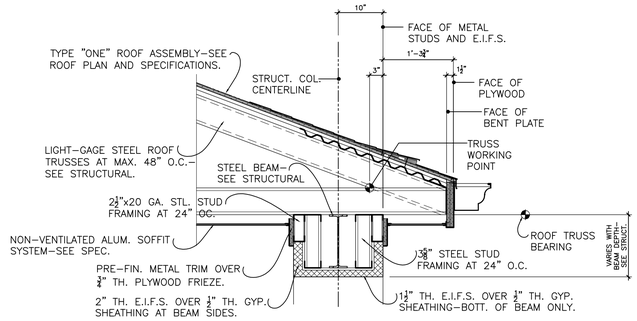

4 A7.1 SECTION thru BEAM at DRIVE-THRU CANOPY
SCALE: 3/4" = 1'-0"

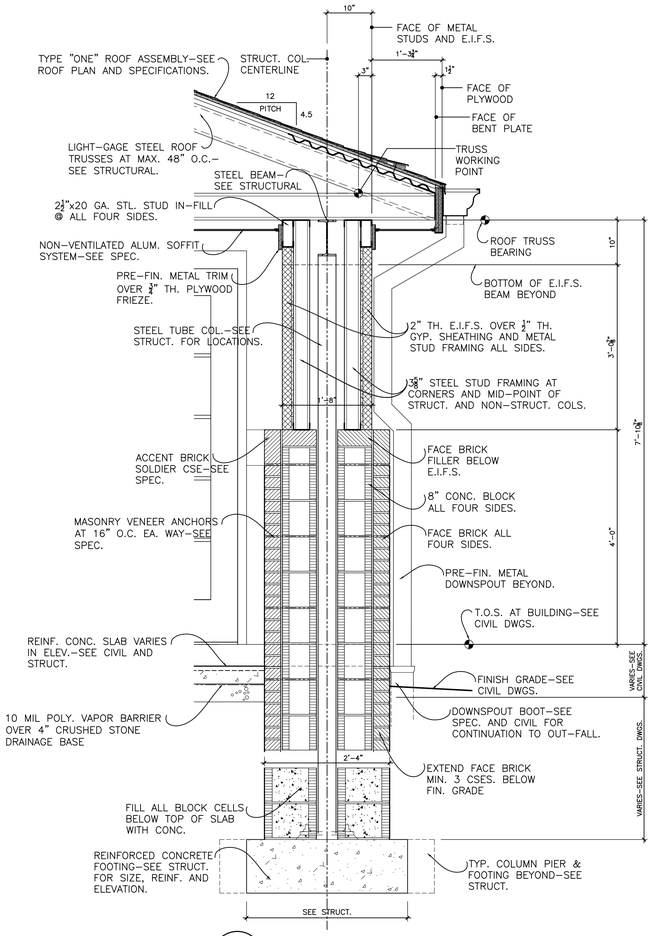

1 A7.1 COLUMN SECTION
SCALE: 3/4" = 1'-0"

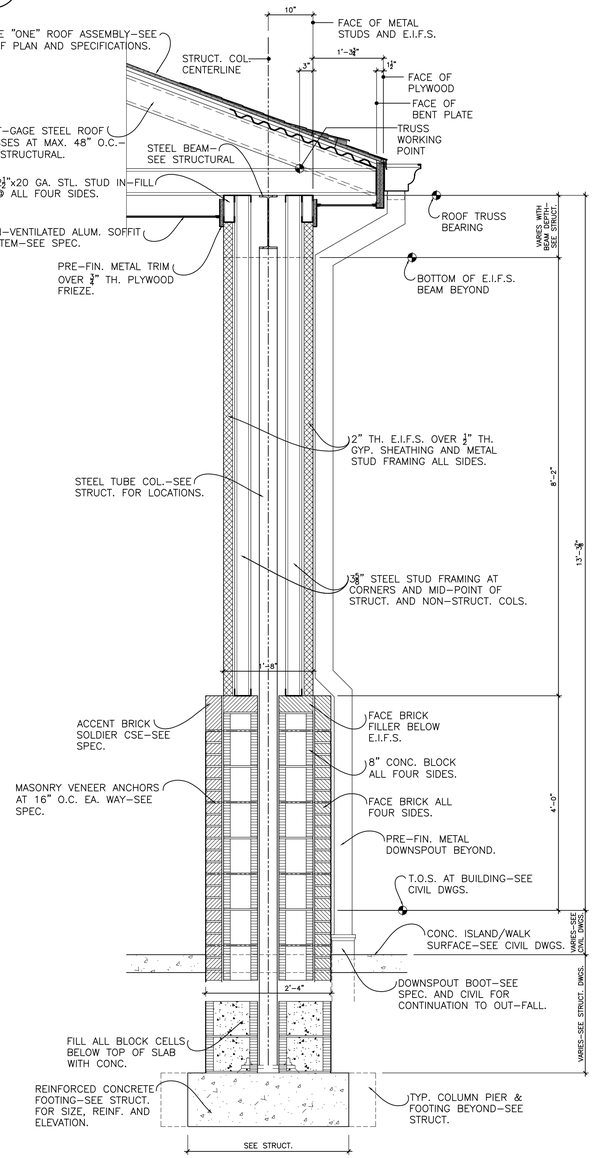

3 A7.1 COLUMN SECTION
SCALE: 3/4" = 1'-0"

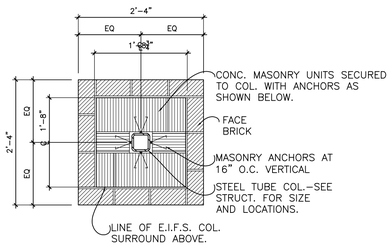

5 A7.1 PLAN SECTION at ARCADE and DRIVE-THRU CANOPY COLUMNS
SCALE: 3/4" = 1'-0"

STATE OF ALABAMA
THOMAS M. McELRATH
3072
GADSDEN, ALABAMA
REGISTERED ARCHITECT

THOMAS M. McELRATH, ARCHITECT
ARCHITECTURE and SPACE PLANNING
717 MERIT SPRINGS ROAD
GADSDEN, ALABAMA 35901
PHONE: (256) 490-8244
EMAIL: TOM@TMM-ARCHITECT.COM

A NEW SENIOR WELLNESS CENTER
at
2829 W. Meighan Boulevard
for
THE CITY of GADSDEN, ALABAMA

WALL SECTIONS

SHEET TWO

DRAWN	TMM
CHECKED	TMM
SCALE	AS NOTED
DATE	SEPTEMBER 15, 2022
FILE	A7.1_WS 2.dwg
JOB NO.	22–01
REVISIONS	

SHEET A7.1 OF 18 SHEETS

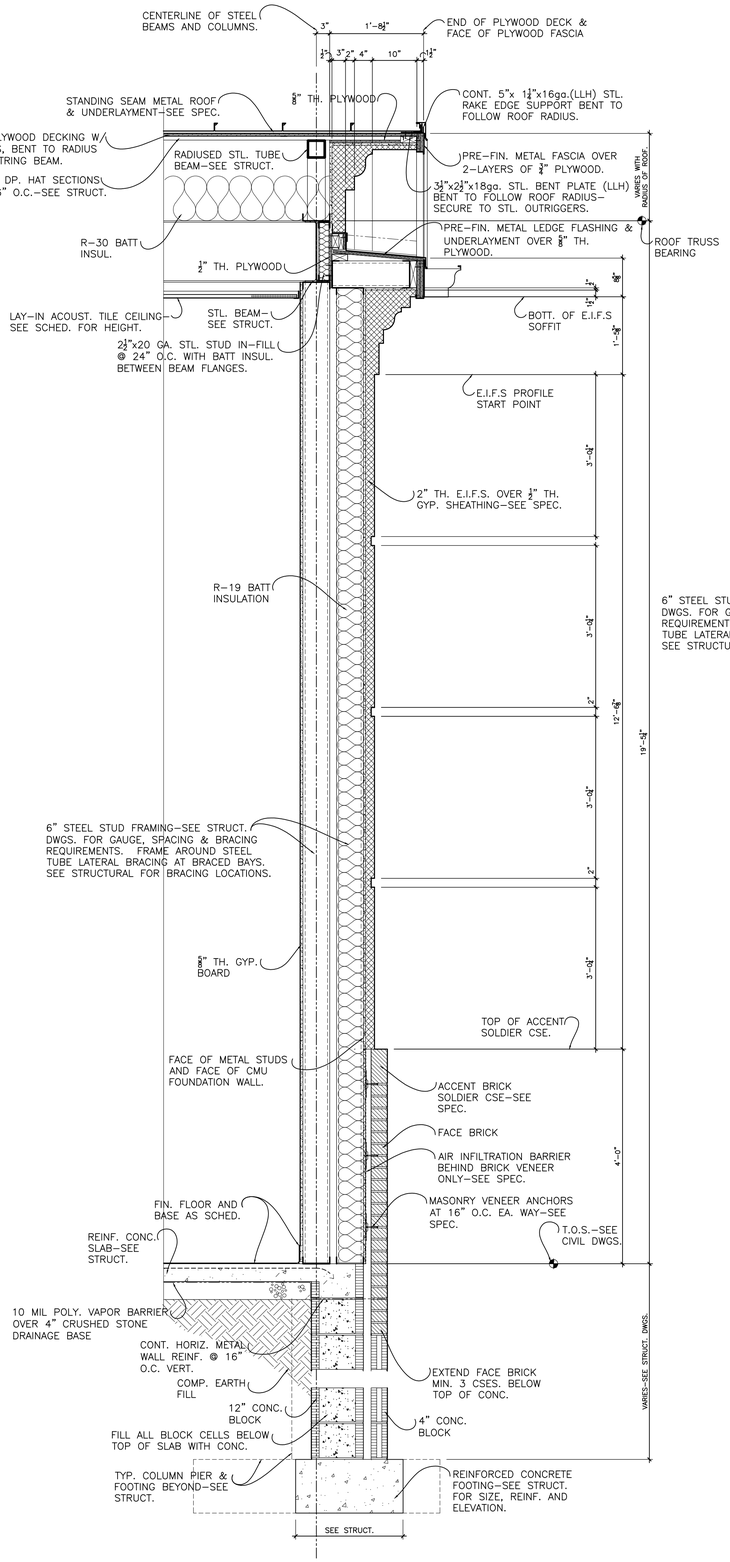

1 / A7.2 WALL SECTION
SCALE: 3/4" = 1'-0"

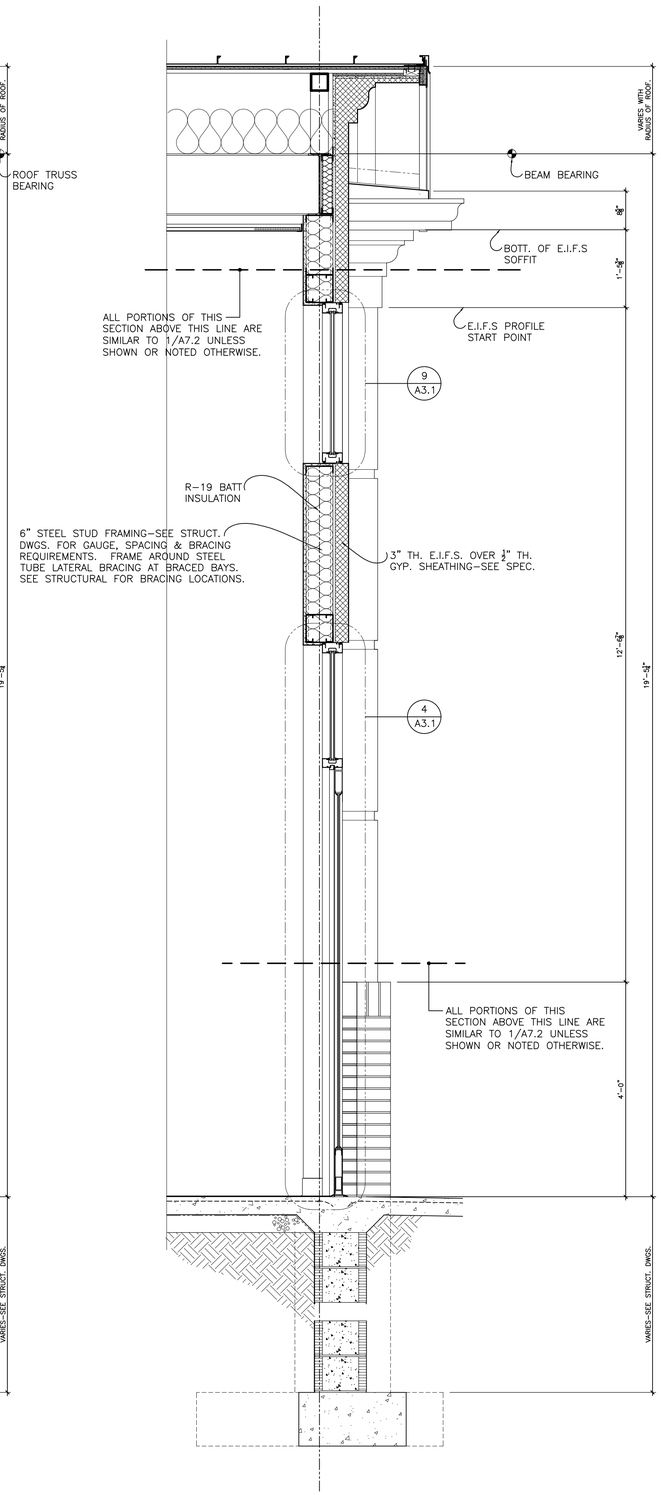

2 / A7.2 WALL SECTION
SCALE: 3/4" = 1'-0"

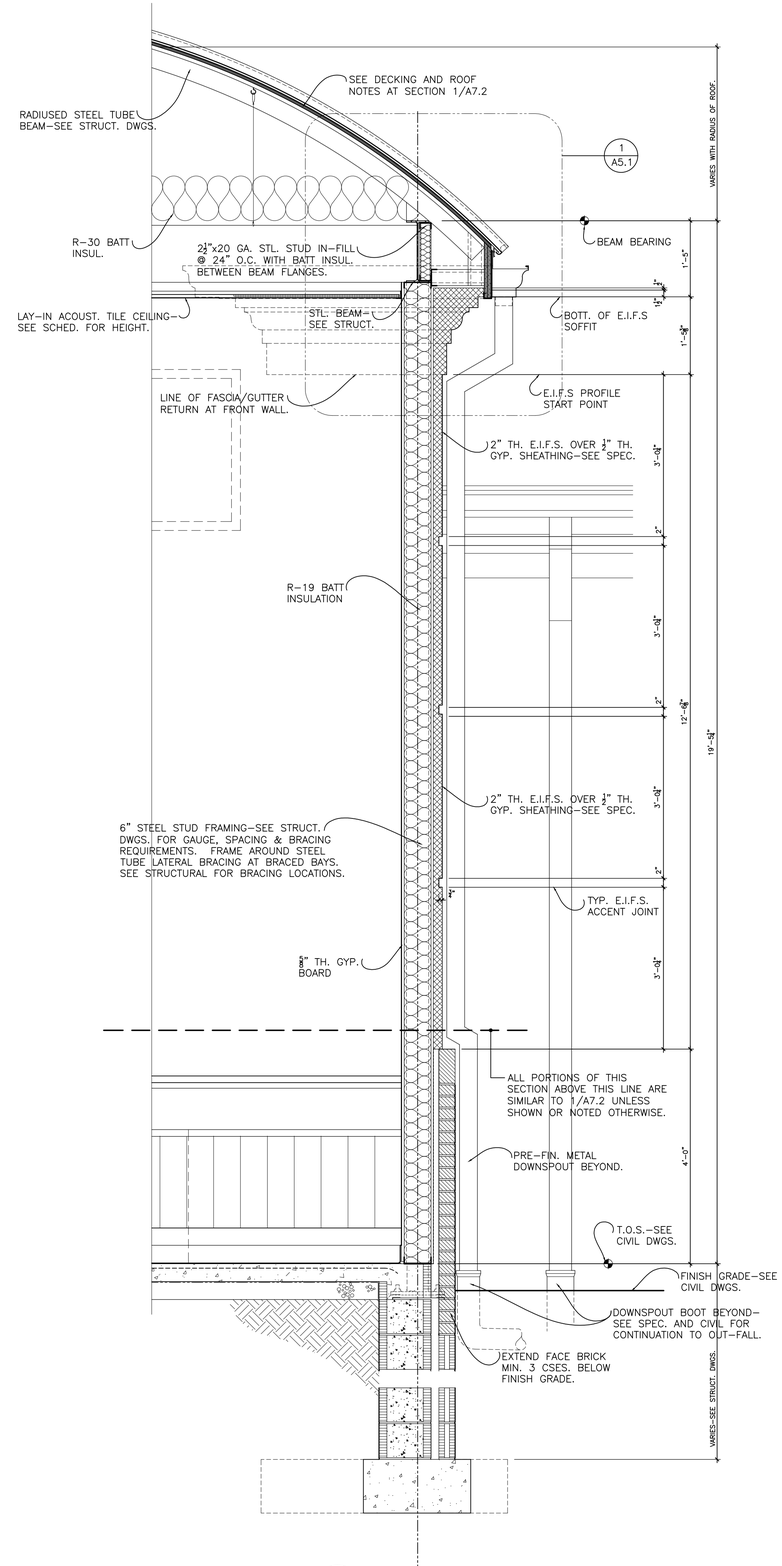

3 / A7.2 WALL SECTION
SCALE: 3/4" = 1'-0"

STATE OF ALABAMA
THOMAS M. McELRATH
3072
GADSDEN, ALABAMA
REGISTERED ARCHITECT

THOMAS M. McELRATH, ARCHITECT
ARCHITECTURE and SPACE PLANNING
717 MERIT SPRINGS ROAD
GADSDEN, ALABAMA 35901
PHONE: (256) 490-8244
EMAIL: TOM@TMM-ARCHITECT.COM

A NEW SENIOR WELLNESS CENTER
at
2829 W. Meighan Boulevard
for
THE CITY of GADSDEN, ALABAMA

WALL SECTIONS

SHEET THREE

DRAWN	TMM
CHECKED	TMM
SCALE	AS NOTED
DATE	SEPTEMBER 15, 2022
FILE	A7.1_WS 2.dwg
JOB NO.	22-01
REVISIONS	

SHEET A7.2 OF 18 SHEETS

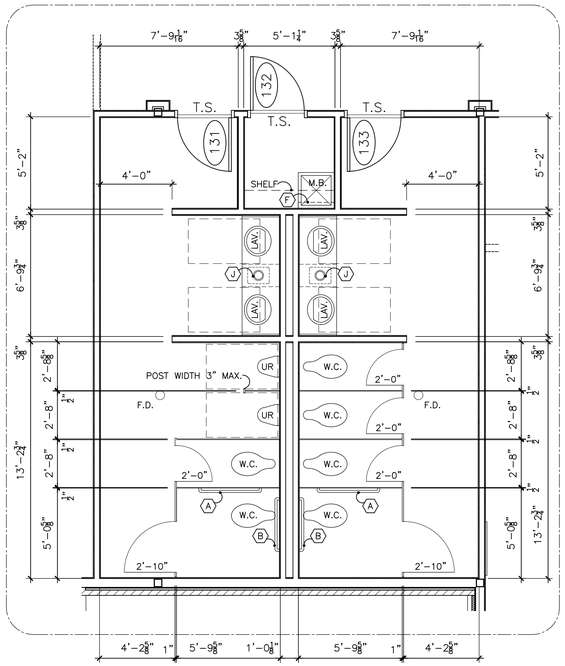

L.S. CUSTODIAL and PUBLIC TOILET PLAN

SCALE: 1/4" = 1'-0"

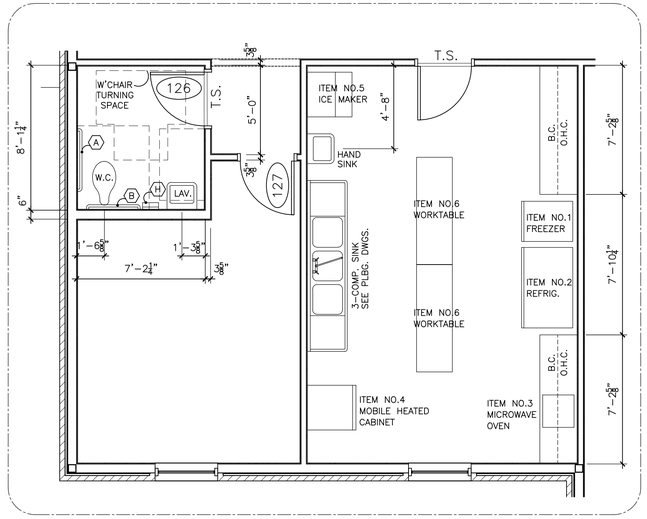

L.S. NUTRITION OFFICE and KITCHEN PLAN

SCALE: 1/4" = 1'-0"

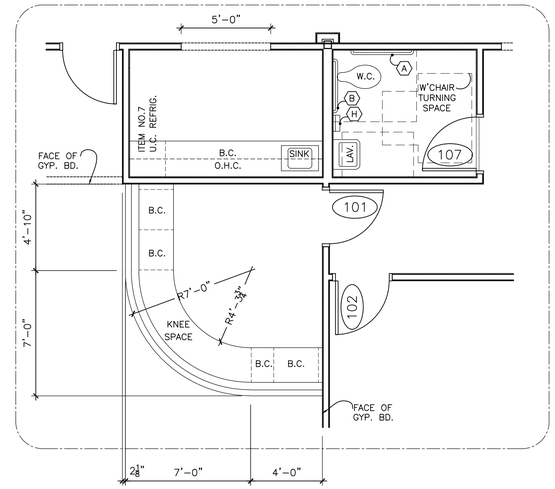

L.S. RECEPTION and STAFF TOILET PLAN

SCALE: 1/4" = 1'-0"

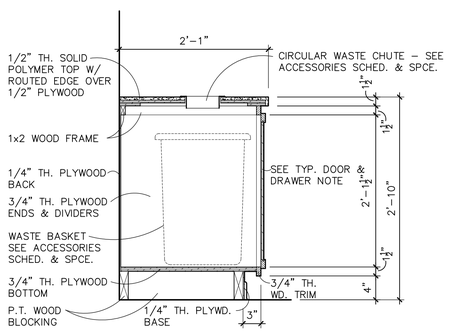

1 / A8.0 SECTION thru TYPICAL BASE CABINET at WASTE RECEPTACLE and CHUTE

SCALE: 1"=1'-0"

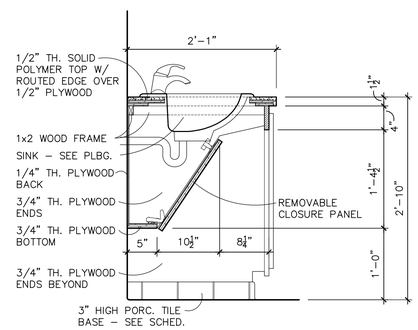

2 / A8.0 SECTION thru TYPICAL BASE CABINET at LAVATORY and H.C. KNEE SPACE

SCALE: 1"=1'-0"

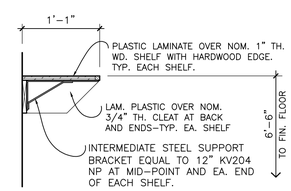

3 / A8.0 FIXED SHELF at CUSTODIAL 132

SCALE: 1"=1'-0"

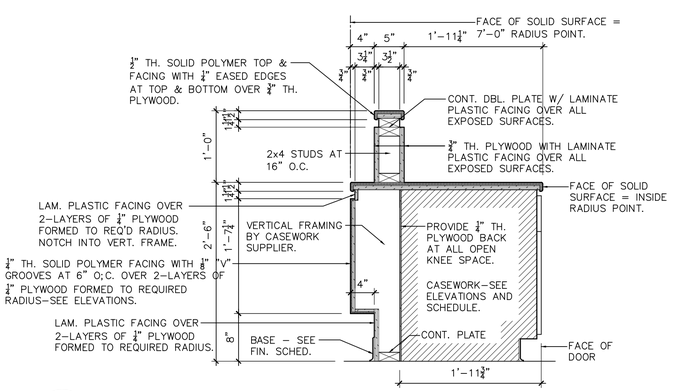

4 / A8.0 TYPICAL SECTION thru RECEPTION COUNTER

SCALE: 1"=1'-0"

SCHEDULE of TOILET ACCESSORIES

MARK	ITEM	MFR.	NO.	MOUNTING HEIGHTS
A	GRAB BARS AT SIDE WALL OF WATER CLOSETS	BOBRICK	B-6806 x42"	33" TO CENTERLINE A.F.F.
B	GRAB BARS AT REAR WALL OF WATER CLOSETS	BOBRICK	B-6806 x36"	33" TO CENTERLINE A.F.F.
C	SURFACE-MOUNTED DUAL-ROLL TISSUE PAPER DISPENSER	BOBRICK	B-6867	24" TO CENTERLINE A.F.F.
D	SURFACE-MOUNTED PAPER TOWEL DISPENSER	BOBRICK	B-2621	47" TO BOTTOM OF UNIT A.F.F.
E	DUAL FEMININE NAPKIN DISPOSAL UNIT	BOBRICK	B-354	30" TO TOP OF UNIT A.F.F.
F	MOP & BROOM HOLDER	BOBRICK	B-223x24	5'-9" TO TOP OF UNIT A.F.F.
G	MIRROR 24"x36"	BOBRICK	B-165 24"x36"	40" TO BOTTOM OF MIRROR A.F.F.
H	AIR BLADE V HAND DRYER	SEE ELECTRICAL DRAWINGS		52" TO TOP OF UNIT A.F.F.
I	DOOR BUMPER	ROCKWOOD	NO. 408 US26D FINISH	CONCEALED MOUNTING. VERIFY MOUNTING HEIGHT AT JOB SITE.
J	CIRCULAR WASTE CHUTE	BOBRICK	B-529 34"	INSTALL IN COUNTERTOP CUTOUT–11" FROM COUNTERTOP EDGE TO CENTERLINE.
K	LARGE WASTE BASKET	RUBBERMAID	#2806 (36 QT.) 14"x11"x18"	PLACE INSIDE BASE CABINET DIRECTLY UNDER WASTE CHUTE
L	COMB. COAT HOOK / DOOR BUMPER	BY TOILET STALL MANUFACTURER		51" TO HOOK C.L. ABOVE FIN. FLOOR

SCHEDULE of INTERIOR SIGNAGE

TYPE	DESCRIPTION OR TEXT	SIZE	LOCATION
1	MEN	8" x 8"	Adjacent to Door "131"
2	WOMEN	8" x 8"	Adjacent to Door "133"
3	UNISEX	8" x 8"	Adjacent to Doors "107" and "126"
4	NUTRITION OFFICE	3" x Req'd. Length	Adjacent to Door "127"
4	GENERAL STORAGE	3" x Req'd. Length	Adjacent to Door "119"
4	TABLES AND CHAIRS	3" x Req'd. Length	Adjacent to Door "124"
4	CLASSROOM	3" x Req'd. Length	Adjacent to Door "104"
4	MEETING ROOM "A"	3" x Req'd. Length	Adjacent to Door "110"
4	MEETING ROOM "B"	3" x Req'd. Length	Adjacent to Door "111"
4	HEALTH SCREENING 1	3" x Req'd. Length	Adjacent to Door "112"
4	HEALTH SCREENING 2	3" x Req'd. Length	Adjacent to Door "113"
4	SUPPLIES	3" x Req'd. Length	Adjacent to Door "105"
4	CUSTODIAL	3" x Req'd. Length	Adjacent to Door "132"
4	COFFEE BAR	3" x Req'd. Length	Adjacent to Cased Opening
4	GAME STORAGE	3" x Req'd. Length	Adjacent to Door "116"
4	OUTDOOR STORAGE	3" x Req'd. Length	Adjacent to Door "117"
4	BOARD ROOM	3" x Req'd. Length	Adjacent to Door "103"

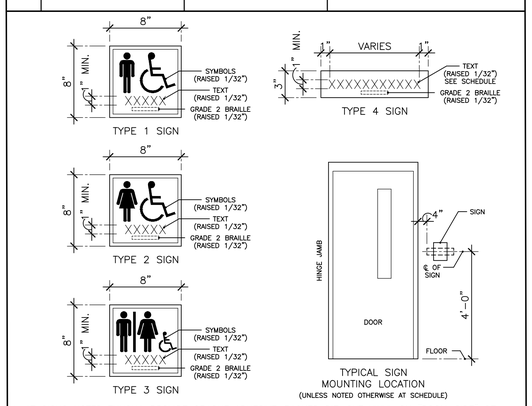

* AT SIGNS NOTED THUSLY, PROVIDE OPAQUE ADHESIVE–BACKED DIE–CUT VINYL ON "ROOM–SIDE" OF GLASS TO CONCEAL ADHESIVE TABS ON BACK OF MAIN SIGN. CUT–OUT SHALL BE SAME SIZE & COLOR AS MAIN SIGN TO CONCEAL ADHESIVE TABS ON BACK OF MAIN SIGN.

STATE OF ALABAMA
THOMAS M. McELRATH
3072
GADSDEN, ALABAMA
REGISTERED ARCHITECT

THOMAS M. McELRATH, ARCHITECT
ARCHITECTURE and SPACE PLANNING
717 MERIT SPRINGS ROAD
GADSDEN, ALABAMA 35901
PHONE: (256) 490-8244
EMAIL: TOM@TMM-ARCHITECT.COM

A NEW SENIOR WELLNESS CENTER
at
2829 W. Meighan Boulevard
for
THE CITY of GADSDEN, ALABAMA

LARGE SCALE PARTIAL PLANS & SCHEDULES

DRAWN	TMM
CHECKED	TMM
SCALE	AS NOTED
DATE	SEPTEMBER 15, 2022
FILE	A8.0_LS Plans.dwg
JOB NO.	22-01
REVISIONS	

SHEET A8.0 OF 18 SHEETS

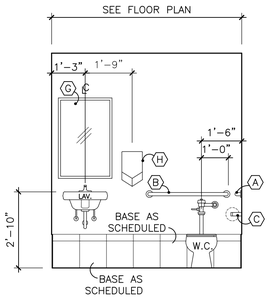

N. WALL UNISEX TOILET 107 SHOWN and W. WALL UNISEX TOILET 126

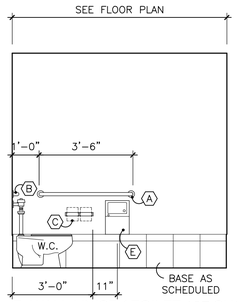

E. WALL UNISEX TOILET 107 SHOWN and N. WALL UNISEX TOILET 126

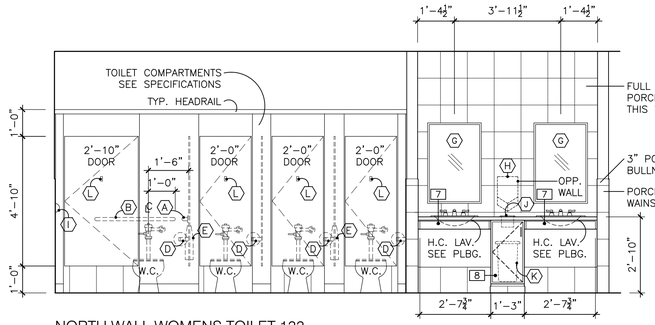

NORTH WALL WOMENS TOILET 133

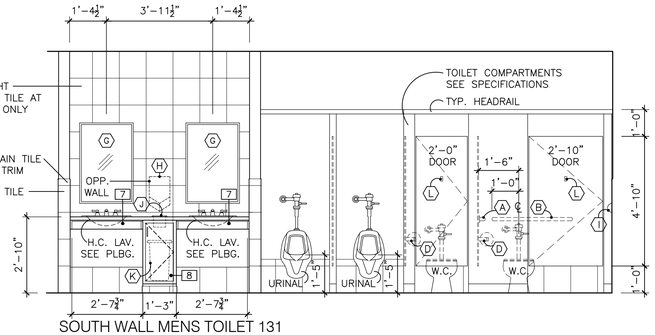

SOUTH WALL MENS TOILET 131

TOILET ELEVATIONS

SCALE: 3/8" = 1'-0"

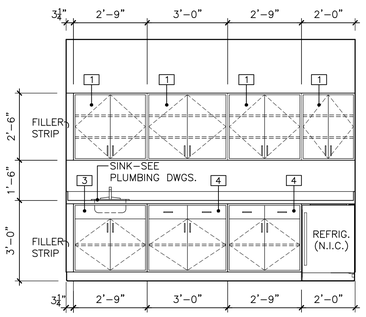

W. WALL COFFEE BAR 108

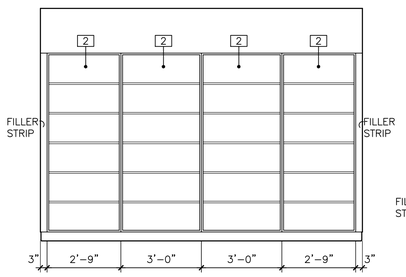

W. WALL SUPPLIES 105

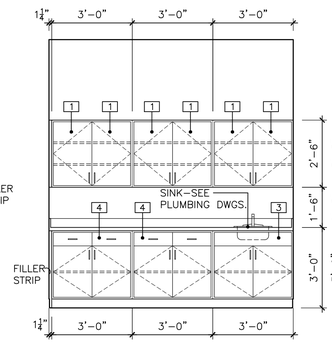

N. WALL CRAFTS/CARDS 115

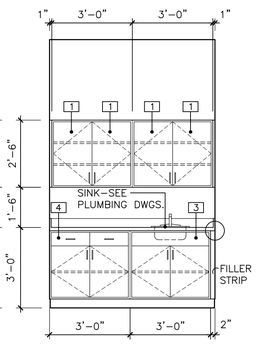

W. WALL BILLIARDS/CARDS 120

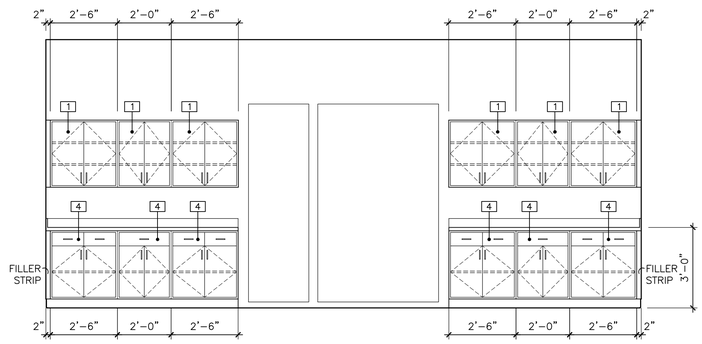

S. WALL KITCHEN 128

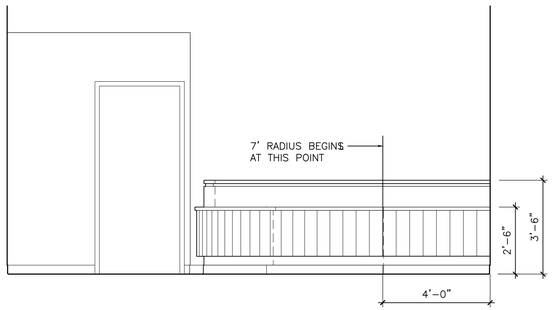

W. SIDE RECEPTION DESK 101

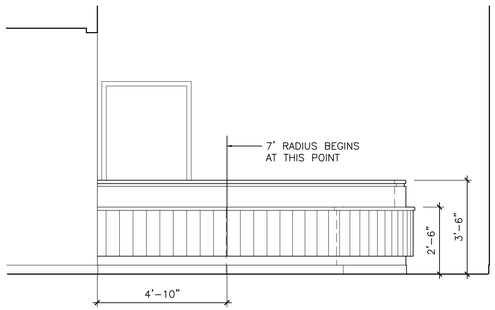

N. SIDE RECEPTION DESK 101

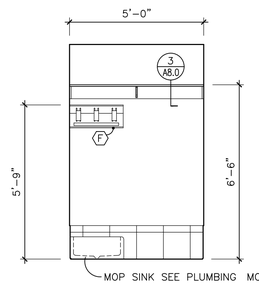

W. WALL CUST. 132

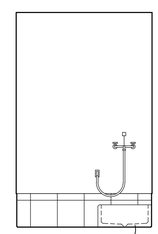

S. WALL CUST. 132

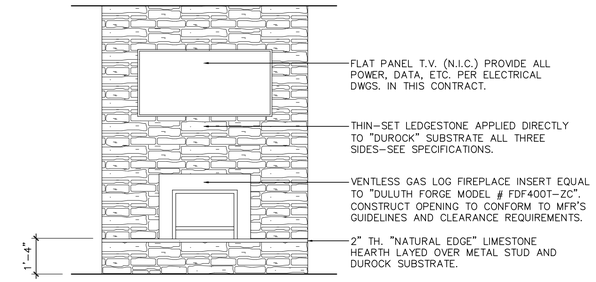

FIREPLACE ELEVATION - W. WALL 115 and 121

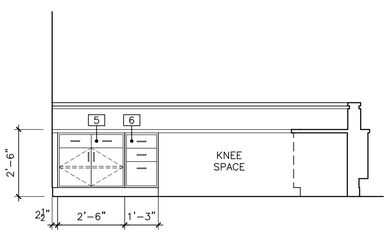

E SIDE RECEPTION DESK 101

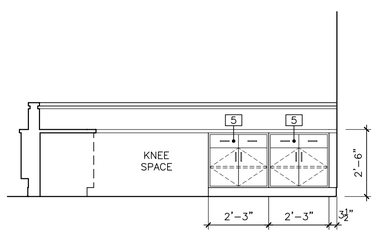

S. SIDE RECEPTION DESK 101

MISCELLANEOUS INTERIOR ELEVATIONS

SCALE: 3/8" = 1'-0"

SCHEDULE of CASEWORK (DENOTED BY SYMBOL "☐")

ITEM#	ITEM	DESCRIPTION
1	WALL CABINET	Double door wall cabinet. Nom. 30"h x 14"dp. x width as shown. Two (2) adjustable shelves.
2	TALL CABINET	Nom. 84"h x 16"dp. x width as shown open tall cabinet with five (5) adjustable shelves. See Elevations.
3	SINK BASE CABINET	Nom. 36"h x 24"dp. x width as shown double-door sink base cabinet with false front above doors. HPL Buildup countertop with Nom. 1 1/2" Self-edge with 4" high backsplash. See Elevations.
4	BASE CABINET WITH DRAWER	Nom. 36"h x 24"dp. x width as shown double-door base cabinet. Two (2) drawers and one (1) adjustable shelf. HPL Buildup countertop with Nom. 1 1/2" Self-edge with 4" high backsplash. See Elevations.
5	BASE CABINET	Nom. 30"h x 24"dp. x width as shown double-door base cabinet. Two (2) drawers and one (1) adjustable shelf. 1/2" th. solid surface countertop and edge over 3/4" th. plywood. (No backsplash or endsplash). See Elevations.
6	BASE CABINET	Nom. 15w x 30"h x 24"dp. two (2) drawer and one (1) file drawer base cabinet. 1/2" th. solid surface countertop and edge over 3/4" th. plywood. (No backsplash or endsplash). See Elevations.
7	HCP. SINK BASE CABINET	Nom. 34"h x 24"dp. x width as shown ADA compliant sink cabinet. 1/2" th. solid surface countertop and edge over 1/2" th. plywood. (No backsplash or endsplash). See details Sheet A8.0
8	BASE CABINET	Single door base cabinet. Nom. 34"h x 24"dp. x width as shown. 1/2" th. solid surface countertop and edge over 1/2" th. plywood. (No backsplash or endsplash). See details Sheet A8.0

CASEWORK NOTES:

RUBBER BASE OR HARD TILE BASE (AS SCHEDULED FOR ROOM) SHALL BE INSTALLED AROUND EXPOSED BASE OF ALL CASEWORK. ALL DOORS AND DRAWERS SCHEDULED TO HAVE LOCKS SHALL BE KEYED IN GROUPS OR SEPARATELY, AS DETERMINED BY THE OWNER.

STATE OF ALABAMA
THOMAS M. McELRATH
3072
GADSDEN, ALABAMA
REGISTERED ARCHITECT

THOMAS M. McELRATH, ARCHITECT
ARCHITECTURE and SPACE PLANNING
717 MERIT SPRINGS ROAD
GADSDEN, ALABAMA 35901
PHONE: (256) 490-8244
EMAIL: TOM@TMM-ARCHITECT.COM

A NEW SENIOR WELLNESS CENTER
at
2829 W. Meighan Boulevard
for
THE CITY of GADSDEN, ALABAMA

INTERIOR ELEVATIONS

DRAWN	TMM
CHECKED	TMM
SCALE	AS NOTED
DATE	SEPTEMBER 15, 2022
FILE	A8.1_LS Plans.dwg
JOB NO.	22-01
REVISIONS	

SHEET A8.1 OF 18 SHEETS

GENERAL NOTES:

1. CONTRACTOR SHALL COORDINATE BETWEEN ARCHITECTURAL, STRUCTURAL, MECHANICAL, ELECTRICAL, PLUMBING, AND OTHER DRAWINGS:

   A. ANY DISCREPANCIES OR CONFLICTS BETWEEN DRAWINGS OF DIFFERENT DISCIPLINES SHALL BE BROUGHT TO THE ATTENTION OF THE ARCHITECT. CONTRACTOR SHALL NOT PROCEED WITH SHOP DRAWING PREPARATION OR ANY CONSTRUCTION UNTIL THE ARCHITECT HAS GIVEN DIRECTION OF RESOLUTION FOR THE DISCREPANCY OR CONFLICT.

   B. NOT ALL OPENINGS AND OTHER COMPONENTS THAT ARE REQUIRED HAVE BEEN SHOWN ON THE STRUCTURAL DRAWINGS. COORDINATE AND VERIFY THE LOCATIONS AND SIZES OF CHASES, INSERTS, OPENINGS, SLEEVES, FINISHES, DEPRESSIONS AND OTHER PROJECT REQUIREMENTS AT FLOORS, WALLS, AND ROOFS BETWEEN DRAWINGS OF DIFFERENT DISCIPLINES.

2. IN THE CASE OF INCONSISTENCIES BETWEEN DRAWINGS AND SPECIFICATIONS OR WITHIN EITHER DOCUMENT, A BIDDER WILL BE DEEMED TO HAVE INCLUDED IN ITS BID THE BETTER QUALITY OR GREATER QUANTITY OF THE WORK INVOLVED UNLESS THE BIDDER ASKED FOR AND OBTAINED THE ARCHITECT'S WRITTEN CLARIFICATION OF THE REQUIREMENTS BEFORE SUBMISSION OF BID.

3. ALL DIMENSIONS SHOWN TAKE PRECEDENCE OVER SCALE SHOWN ON PLANS, SECTIONS, AND DETAILS. DO NOT SCALE THE DRAWINGS.

4. THE DETAILS PROVIDED ON SHEETS LABELED AS "TYPICAL DETAILS" APPLY GENERALLY TO THE DRAWINGS IN AREAS WHERE CONDITIONS ARE SIMILAR TO THOSE DESCRIBED IN THE DETAILS, UNLESS NOTED OTHERWISE.

5. ALL OF THE CONTRACTOR'S PROPOSED SUBSTITUTIONS ARE CONSIDERED CHANGE ORDERS AND SHALL BE SUBMITTED TO THE ARCHITECT/ENGINEER FOR REVIEW AND/OR APPROVAL PRIOR TO ANY PERTINENT WORK OR FABRICATION.

6. CONSTRUCTION METHODS, PROCEDURES AND SEQUENCES ARE THE CONTRACTOR'S RESPONSIBILITY. THE CONTRACTOR SHALL TAKE ALL THE NECESSARY MEANS TO MAINTAIN AND PROTECT THE STRUCTURAL INTEGRITY OF ALL CONSTRUCTION, NEW AND EXISTING, AT ALL STAGES INCLUDING, BUT NOT LIMITED TO, THE FOLLOWING:

   A. BRACE ALL BASEMENT-TYPE WALLS RETAINING EARTH UNTIL RESTRAINING SLABS/FLOORS HAVE BEEN INSTALLED AND REACHED REQUIRED DESIGN STRENGTH.

   B. BRACE/SHORE ALL WALLS AS REQUIRED TO MAINTAIN STABILITY DURING CONSTRUCTION.

   C. SHORE EXISTING FLOORS, WALLS, AND/OR ROOFS AS REQUIRED DURING DEMOLITION OF ANY PORTION OF EXISTING STRUCTURE UNTIL NEW SUPPORT FRAMING HAS BEEN INSTALLED.

7. ALL STRUCTURAL MEMBERS, AS SHOWN, HAVE BEEN DESIGNED TO CARRY IN PLACE DESIGN LOADS ONLY. THE CONTRACTOR SHALL BE RESPONSIBLE FOR THE SUPPORT OF ANY LOADS AND FORCES IMPOSED DURING CONSTRUCTION, TRANSPORTATION, ERECTION, AND HANDLING. THE CONTRACTOR SHALL INSURE THAT CONSTRUCTION LOADS DO NOT EXCEED THE DESIGN LIVE LOADS INDICATED ON THE STRUCTURAL DRAWINGS AND THAT THESE LOADS ARE NOT IMPOSED ON THE STRUCTURAL MEMBERS PRIOR TO THE TIME THAT CONCRETE REACHES THE FULL SPECIFIED DESIGN STRENGTH, STEEL MEMBERS AND THEIR CONNECTIONS ARE FULLY BOLTED AND / OR WELDED AND ALL OTHER FRAMING MEMBERS AND THEIR CONNECTIONS ARE IN PLACE.

8. CONTRACTOR SHALL FIELD VERIFY ALL EXISTING DIMENSIONS AND CONDITIONS PRIOR TO ANY PERTINENT WORK OR FABRICATION. ALL EXISTING CONDITIONS AND DIMENSIONS SHALL BE NOTED ON THE SHOP DRAWINGS.

9. ALL CONSTRUCTION JOINTS SHOWN ON THE STRUCTURAL DRAWINGS SHALL BE INCORPORATED INTO THE STRUCTURE. ADDITIONAL CONSTRUCTION JOINTS TO FACILITATE CONSTRUCTION SHALL BE LOCATED AND DETAILED ON THE SHOP DRAWINGS FOR REVIEW.

10. ALL EXPOSED CONCRETE EDGES SHALL BE CHAMFERED.

SHOP DRAWINGS/SUBMITTALS:

1. SHOP DRAWING SUBMITTAL REQUIREMENTS SHALL BE IN ACCORDANCE WITH THE PROJECT CONTRACT DOCUMENTS (DRAWINGS AND SPECIFICATIONS) AND SHALL FOLLOW INDUSTRY GUIDELINES AND STANDARDS.

2. ALL QUESTIONS, CLARIFICATIONS, OR MODIFICATIONS OF THE CONTRACT DOCUMENTS SHALL BE CLEARLY DOCUMENTED AND INDICATED ON THE SHOP DRAWING TRANSMITTAL OR COVER SHEET. ITEMS SHALL NOT BE CONSIDERED APPROVED UNLESS SPECIFICALLY ADDRESSED BY MBA IN THE REVIEW COMMENTS.

3. ALL SHOP DRAWINGS ARE TO BE NEWLY PREPARED. REPRODUCTIONS OF CONTRACT STRUCTURAL DRAWINGS FOR USE AS ERECTION DRAWINGS WILL NOT BE PERMITTED. SHOULD SHOP DRAWING SUBMITTALS CONTAIN ANY REPRODUCTIONS OF CONTRACT STRUCTURAL DRAWINGS, THEY WILL BE REJECTED AND RETURNED WITHOUT ENGINEER REVIEW.

   A. MBA MAY CONSIDER TRANSFERRING COMPUTER FILES, IN THE FORMAT CREATED, OF THE PLAN SHEETS TO PROJECT SUBCONTRACTORS TO ASSIST IN DEVELOPING SHOP DRAWINGS ON A CASE BY CASE BASIS. A SIGNED FILE TRANSFER AGREEMENT WILL BE REQUIRE PRIOR TO RELEASE OF MBA FILES.

4. CONTRACTOR TO REVIEW ALL SHOP DRAWING SUBMITTALS AND STAMP WITH APPROVAL PRIOR TO SUBMISSION TO ARCHITECT/ ENGINEER. ***SHOP DRAWINGS RECEIVED BY ARCHITECT/ENGINEER THAT HAVE NOT BEEN REVIEWED AND COORDINATED BY THE CONTRACTOR WILL BE RETURNED WITHOUT ARCHITECT/ENGINEER'S REVIEW***. THE CONTRACTOR IS RESPONSIBLE FOR CONFIRMING AND CORRECTING DIMENSIONS WHICH PERTAIN TO FABRICATION PROCESSES OR CONSTRUCTION TECHNIQUES PRIOR TO SUBMITTAL AND FOR COORDINATION OF WORK OF ALL TRADES.

5. CONTRACTOR MAY PROVIDE REVIEWED AND APPROVED SUBMITTALS IN AN ELECTRONIC .PDF FORMAT FOR ENGINEER REVIEW AND APPROVAL. IN LIEU OF ELECTRONIC SUBMITTALS, CONTRACTOR MAY PROVIDE NO MORE THAN FOUR PAPER COPIES OF EACH STRUCTURAL SHOP DRAWING SUBMITTAL TO THE ENGINEER. THE STRUCTURAL ENGINEER WILL REVIEW AND RETURN TWO OF THE COPIES TO THE ARCHITECT. ADDITIONAL COPIES REQUIRED BY THE CONTRACTOR SHALL BE MADE BY THE CONTRACTOR AFTER THE REVIEW PROCESS.

6. MBA REVIEW OF SHOP DRAWING SUBMITTALS IS FOR GENERAL CONFORMANCE WITH THE DESIGN CONCEPT OF THE PROJECT AND FOR GENERAL COMPLIANCE WITH THE CONTRACT DOCUMENTS. REVIEW AND/OR APPROVAL OF SHOP DRAWINGS SHALL NOT RELIEVE THE CONTRACTOR OF THE RESPONSIBILITY FOR DEVIATIONS FROM THE REQUIREMENTS OF THE CONTRACT DOCUMENTS OR FOR ERRORS/ OMISSIONS IN THE SHOP DRAWINGS.

7. RESUBMITTED SHOP DRAWINGS SHALL HAVE CHANGES AND/OR ADDITIONS CLEARLY INDICATED. REVIEW OF RESUBMITTED SHOP DRAWINGS IS LIMITED TO THE ITEMS REQUIRING CORRECTION ON THE PREVIOUS SUBMITTAL.

SITE AND FOUNDATION:

1. ALLOWABLE SOIL BEARING PRESSURES (PSF): 2500 PSF

2. EXCAVATE, WHERE REQUIRED, TO BUILDING AND STRUCTURE SUBGRADE.

3. PROOF-ROLL THE AREA UNDER THE BUILDING, PLUS 5'-0" ON ALL SIDES, WITH A LOADED DUMP TRUCK TO LOCATE ANY SOFT AREAS. A GEOTECHNICAL ENGINEER IS TO BE PRESENT DURING THIS OPERATION. ANY SOFT AREAS DETECTED ARE TO BE UNDERCUT AND REPLACED WITH ENGINEERED FILL.

4. ACCEPTABLE FILL MATERIAL SHALL BE FREE OF ORGANICS, AND HAVE A P.I. OF LESS THAN 30, L.L. OF LESS THAN 50 AND A MAXIMUM DRY DENSITY OF GREATER THAN 100 PCF. CRUSHED STONE BACKFILL TO MEET REQUIREMENTS OF A.H.D. No. 57 STONE. DRAINAGE FILL SUPPORTING SLABS SHALL MEET THE REQUIREMENTS OF THE GEOTECHNICAL ENGINEER.

5. FILL, WHERE REQUIRED, IS TO BE PLACED IN 8" LOOSE LIFTS AND COMPACTED TO 98% STANDARD PROCTOR (ASTM D-698), WITHIN ±2% OF OPTIMUM MOISTURE CONTENT.

6. OWNER SHALL ENGAGE A GEOTECHNICAL ENGINEER PRIOR TO CONSTRUCTION TO PROVIDE REQUIREMENTS FOR ALL SUBGRADES, FILLS AND BACKFILLS PRIOR TO PLACEMENT OF CONCRETE. THE GEOTECHNICAL ENGINEER IS TO PROVIDE ASSURANCE THAT THE REQUIREMENTS WILL ACHIEVE THE ALLOWABLE SOIL BEARING CAPACITIES NOTED.

CONCRETE:

1. CONCRETE CONSTRUCTION AND QUALITY ASSURANCE SHALL BE IN ACCORDANCE WITH CURRENT ACI STANDARDS.

2. CONCRETE SCHEDULES

	ITEM	28 DAY COMPRESSIVE STRENGTH
A.	CONCRETE WALLS, COLUMNS, & BEAM	4000 PSI NORMAL WEIGHT
B.	ALL OTHER CONCRETE	3000 PSI NORMAL WEIGHT

3. CONCRETE COVER OVER REINFORCING (UNO)

A.	UNFORMED SURFACE IN CONTACT WITH EARTH:	3 IN.
B.	UNFORMED SURFACE OVER VAPOR BARRIER:	2 IN.
C.	FORMED SURFACES EXPOSED TO EARTH OR WEATHER	
	#6 AND LARGER	2 IN.
	#5 AND SMALLER	1 1/2 IN.
D.	FORMED SURFACES NOT EXPOSED TO EARTH OR WEATHER:	
	WALLS, SLABS:	3/4 IN.
	COLUMNS, BEAMS:	1 1/2 IN. TO TIES

4. CONCRETE AT SLABS ON GRADE SHALL HAVE A NOMINAL MAXIMUM COARSE AGGREGATE SIZE OF 3/4 INCH. ADJUST PORTIONS OF COMBINED COARSE, INTERMEDIATE AND FINE AGGREGATES TO PROVIDE A COARSENESS FACTOR OF 60 TO 75%.

5. ALL REINFORCING SHALL CONFORM TO THE LATEST REVISION OF ASTM SPECIFICATION A615, GRADE 60 AND BE DETAILED IN ACCORDANCE WITH THE LATEST REVISION OF ACI STANDARD 315.

6. NO REINFORCING BAR SHALL BE WELDED IN ANY MANNER, UNLESS SPECIFICALLY SHOWN OR NOTED ON THE DRAWINGS.

7. CONTINUOUS FOOTING REINFORCING BARS SHALL BE LAPPED 30 BAR DIAMETERS, BUT NOT LESS THAN 1'-0".

8. GRADE BEAM, ELEVATED BEAM, AND ELEVATED SLAB REINFORCING BARS SHALL BE SPLICED ONLY AS SHOWN ON THE DRAWINGS, EXCEPT THE REINFORCING DESIGNATED AS "CONTINUOUS" SHALL HAVE A CLASS "B" LAP SPLICE (PER ACI 318). LAP SPLICES OF CONTINUOUS REINFORCING SHALL BE MADE OVER SUPPORTS FOR BOTTOM BARS AND FOR INTERMEDIATE BARS AND AT MID-SPAN FOR TOP BARS. AT EXTERIOR SUPPORTS, TOP AND BOTTOM BARS SHALL BE HOOKED AND INTERMEDIATE BARS SHALL EXTEND TO WITHIN 2" OF EXTERIOR FACE.

9. COLUMN AND WALL VERTICAL REINFORCING BARS SHALL BE LAPPED WITH A CLASS "B" SPLICE. WALL HORIZONTAL REINFORCING BARS SHALL BE LAPPED 30 DIAMETERS AT SPLICE POINTS. PROVIDE CORNER BARS FOR WALLS.

10. PROVIDE FULL EMBEDMENT FOR ALL DOWELS. IF NOT OTHERWISE SPECIFIED, DOWEL SIZE AND SPACING SHALL BE THE SAME AS MAIN REINFORCING.

11. CONSTRUCTION JOINTS IN CONCRETE BEAMS AND SLABS SHALL BE AT OR NEAR MIDSPAN. ALL CONSTRUCTION JOINTS TO BE KEYED.

12. HORIZONTAL CONSTRUCTION JOINTS SHALL NOT BE PERMITTED IN WALLS AND BEAMS, UNLESS SHOWN ON THE STRUCTURAL DRAWINGS.

13. CONDUIT, PIPES, AND SLEEVES SHALL NOT BE SPACED CLOSER THAN 3 DIAMETERS ON CENTER, NOT HAVE AN OUTSIDE DIAMETER GREATER THAN 1/3 THE OVERALL THICKNESS OF THE SLAB, WALL OR BEAM IN WHICH THEY ARE EMBEDDED, AND SHALL HAVE A MINIMUM COVER OF 1 1/2 INCH FOR CONCRETE EXPOSED TO EARTH OR WEATHER AND 3/4 INCH FOR CONCRETE NOT EXPOSED TO EARTH OR WEATHER.

14. PIPING AND CONDUIT SHALL BE SO FABRICATED AND INSTALLED THAT CUTTING, BENDING, OR DISPLACEMENT OF REINFORCEMENT FROM ITS PROPER LOCATION WILL NOT BE REQUIRED.

15. THE CONTRACTOR SHALL SUBMIT, FOR REVIEW, SHOP DRAWINGS FOR ALL REINFORCING BARS INCLUDING DETAILS AT ALL OPENINGS AND ASSOCIATED ADDED REINFORCEMENT AS SHOWN ON TYPICAL DETAILS.

TENSION LAP SPLICE LENGTH

BAR SIZE	f'c = 3000 PSI				f'c = 4000 PSI				f'c = 5000 PSI			
	TOP BARS		OTHER BARS		TOP BARS		OTHER BARS		TOP BARS		OTHER BARS	
	A	B	A	B	A	B	A	B	A	B	A	B
#3	22"	28"	17"	22"	19"	24"	15"	19"	17"	22"	13"	17"
#4	29"	37"	22"	29"	25"	32"	19"	25"	22"	29"	17"	22"
#5	36"	47"	28"	36"	31"	40"	24"	31"	28"	36"	22"	28"
#6	43"	56"	33"	43"	37"	48"	29"	37"	33"	43"	26"	33"
#7	63"	81"	48"	63"	54"	70"	42"	54"	49"	63"	37"	49"
#8	72"	93"	55"	72"	62"	80"	48"	62"	55"	72"	43"	55"
#9	81"	105"	62"	81"	70"	91"	54"	70"	63"	81"	48"	63"
#10	91"	118"	70"	91"	79"	102"	61"	79"	70"	91"	54"	70"
#11	101"	131"	78"	101"	87"	113"	67"	87"	78"	101"	60"	78"

STRUCTURAL STEEL:

1. DESIGN, CONSTRUCTION, QUALITY ASSURANCE, AND ERECTION OF STRUCTURAL STEEL SHALL BE IN ACCORDANCE WITH CURRENT AISC STANDARDS.

2. ALL STRUCTURAL STEEL WIDE FLANGE SHAPES SHALL CONFORM TO ASTM A992

3. ALL STRUCTURAL STEEL PLATES, ANGLES AND CHANNELS SHALL CONFORM TO ASTM A36.

4. ALL STRUCTURAL STEEL SQUARE, RECTANGULAR AND ROUND HSS SECTIONS SHALL CONFORM TO ASTM A500, GRADE B.

5. ALL STRUCTURAL STEEL PIPE SHALL CONFORM TO ASTM A53, TYPE E OR S, GRADE B

6. FABRICATION AND ERECTION SHALL CONFORM TO AISC CODE OF STANDARD PRACTICE.

7. ALL WELDING SHALL CONFORM TO AWS STANDARDS. THICKNESS OF WELDS ARE AS SHOWN, SPECIFIED OR REQUIRED.

8. ALL BOLTED CONNECTIONS SHALL BE MINIMUM 3/4" DIAMETER, A325 HIGH STRENGTH BOLTS, UNLESS NOTED OTHERWISE.

9. ALL BEAM CONNECTIONS SHALL BE "SIMPLE SHEAR CONNECTIONS" UNLESS NOTED OTHERWISE. WHERE BEAM REACTIONS AND/OR DESIGN FORCES ARE NOT SHOWN ON THE STRUCTURAL DRAWINGS, THE CONNECTIONS SHALL BE DESIGNED TO SUPPORT A REACTION EQUAL TO ONE-HALF THE TOTAL UNIFORM LOAD CAPACITY FROM THE MAXIMUM UNIFORM LOAD TABLE (LATEST AISC MANUAL OF STEEL PRACTICE) MULTIPLIED BY A FACTOR OF 1.2 (NON-COMPOSITE BEAMS) OR 1.45 (COMPOSITE BEAMS) FOR GIVEN SHAPE, SPAN, AND GRADE OF STEEL.

STEEL DECK:

1. STEEL DECK CONSTRUCTION SHALL BE IN ACCORDANCE WITHTHE LATEST EDITION OF SDI STANDARDS.

2. ATTACH ROOF DECK TO SUPPORTS AT 12" OC. W/ 5/8" PUDDLE WELDS. ATTACH TO PERIMETER SUPPORTS AT 6" OC. PROVIDE #10 TEK SCREW SIDELAP FASTENERS AT 12" OC. (MIN. 3 PER SPAN).

3. DECK SHALL BE ATTACHED TO STEEL BEAMS AT 12" O.C. EITHER BY STUDS OR 3/4" PUDDLE WELDS. SIDE LAP WELDS SHALL BE PROVIDED PER MANUFACTURER'S RECOMMENDATIONS.

4. DECK SUPPORTS AROUND STEEL COLUMNS AND CLOSURE ANGLES SHALL BE SUPPLIED BY THE DECK MANUFACTURER, IF REQUIRED.

5. DECK SHALL BE CONTINUOUS OVER THREE OR MORE SPANS.

PRE-FABRICATED COLD-FORMED STEEL TRUSSES:

1. THE DESIGN, MANUFACTURE, QUALITY ASSURANCE AND ERECTION OF COLD-FORMED STEEL TRUSSES SHALL BE IN ACCORDANCE WITH THE CURRENT AISI NORTH AMERICAN STANDARDS FOR COLD-FORMED STEEL FRAMING.

2. A TRUSS DESIGN PACKAGE SHALL BE SUBMITTED TO THE STRUCTURAL ENGINEER OF RECORD FOR REVIEW PRIOR TO FABRICATION AND ERECTION. THIS PACKAGE SHALL INCLUDE, AT A MINIMUM, EACH INDIVIDUAL TRUSS DESIGN DRAWING AND CALCULATION, THE TRUSS PLACEMENT DIAGRAM, THE PERMANENT INDIVIDUAL TRUSS MEMBER RESTRAINT/BRACING METHOD AND DETAILS, AND ANY OTHER STRUCTURAL DETAILS GERMANE TO THE TRUSSES. THE TRUSS DESIGN DRAWINGS SHALL BEAR THE SEAL AND SIGNATURE OF THE TRUSS DESIGNER WHO SHALL BE REGISTERED IN THE STATE OF ALABAMA.

3. TRUSS TO TRUSS CONNECTIONS SHALL BE DESIGNED AND SPECIFIED BY THE TRUSS MANUFACTURER FOR THE DESIGN LOADS.

4. TRUSS MANUFACTURER SHALL DESIGN AND PROVIDE COLD-FORMED STEEL FRAMING FOR ALL RIDGE, HIP RIDGE AND VALLEY MEMBERS.

5. ALL TEMPORARY AND PERMANENT BRACING MEMBERS AND CONNECTIONS REQUIRED FOR TRUSSES SHALL BE DESIGNED AND DETAILED BY THE TRUSS DESIGNER. AT A MINIMUM, TRUSS INSTALLER SHALL COMPLY WITH THE "GUIDE TO GOOD PRACTICE FOR HANDLING, INSTALLING, RESTRAINING, AND BRACING OF COLD-FORMED STEEL TRUSSES" BY THE COLD-FORMED STEEL COUNCIL.

6. TRUSSES SHALL BE DESIGNED FOR THE FOLLOWING SUPERIMPOSED LOADS:
   ROOF TOP CHORD DEAD LOAD----------10 PSF
   ROOF BOTTOM CHORD DEAD LOAD----------10 PSF
   ROOF TOP CHORD LIVE LOAD----------20 PSF

7. TRUSSES SHALL BE DESIGNED FOR COMPONENT AND CLADDING WIND LOADS BASED ON THE PROVIDED DESIGN CRITERIA AND COMPONENT AND CLADDING WIND LOAD TABLES.

8. TRUSS DESIGNER SHALL VERIFY THAT ALL EQUIPMENT WEIGHTS, CONCENTRATED LOADS, AND LOCATIONS ARE PROVIDED BY THE GENERAL CONTRACTOR. GENERAL CONTRACTOR SHALL PROVIDE THIS INFORMATION TO THE TRUSS DESIGNER. THE LOADS AND CORRESPONDING LOCATIONS SHALL BE IDENTIFIED ON THE TRUSS PLACEMENT DIAGRAM.

9. MECHANICAL DUCT OPENINGS IN TRUSSES SHALL BE COORDINATED WITH THE MECHANICAL DRAWINGS TO ACCOMMODATE THE DUCT LOCATION AND SIZE WITH INSULATION.

DESIGN CRITERIA:

1. GOVERNING CODE:

   A. INTERNATIONAL BUILDING CODE, I.B.C. 2018

2. GRAVITY DESIGN LOADS:

   A. DEAD

      1. DESIGN DEAD LOADS ARE BASED ON THE SELF WEIGHT OF CONSTRUCTION MATERIALS SHOWN IN THE ARCHITECTURAL AND STRUCTURAL DRAWINGS. ANY ALTERNATE MATERIALS SHALL BE SUBMITTED TO THE STRUCTURAL ENGINEER TO REVIEW.

   B. LIVE:

      1. TYPICAL FLOOR — 60 PSF + 20 PSF PARTITION LOAD
      2. STAIRS, RAMPS — 100 PSF
      3. CORRIDORS — 100 PSF
      4. LOBBIES — 100 PSF
      5. ROOF — 20 PSF

   C. SNOW

      1. GROUND SNOW LOAD (Pg) = _ PSF
      2. FLAT ROOF SNOW LOAD (Pf) = 5 PSF
      3. SNOW EXPOSURE FACTOR (Ce) = 1.0
      4. SNOW LOAD IMPORTANCE FACTOR (Is) = 1.0
      5. THERMAL FACTOR (Ct) = 1.0

3. LATERAL DESIGN LOADS:

   A. WIND

      1. DESIGNED PER ASCE 7-16
      2. ULTIMATE WIND SPEED = 106 MPH
      3. NOMINAL WIND SPEED = 82 MPH
      4. RISK CATEGORY = II
      5. BUILDING CATEGORY = ENCLOSED
      6. EXPOSURE CATEGORY = C
      7. INTERNAL PRESSURE COEFFICIENT (GCpi) = ±0.18
      8. COMPONENTS & CLADDING WIND PRESSURES SEE CHART

   B. EARTHQUAKE

      1. SEISMIC RISK CATEGORY = II
      2. SEISMIC IMPORTANCE FACTOR (Ie) = 1.0
      3. MAPPED SPECTRAL RESPONSE ACCELERATIONS
         A. Ss = 0.273
         B. S1 = 0.101
      4. SOIL SITE CLASS = C
      5. DESIGN SPECTRAL RESPONSE ACCELERATIONS
         A. Sds = 0.237
         B. Sd1 = 0.101
      6. SEISMIC DESIGN CATEGORY = B
      7. BASIC SEISMIC-FORCE-RESISTING SYSTEM
         STEEL SYSTEMS NOT SPECIFICALLY DETAILED FOR SEISMIC RESISTANCE
      8. DESIGN BASE SHEAR = 62 KIPS
      9. SEISMIC RESPONSE COEFFICIENT (Cs) = 0.096
      10. RESPONSE MODIFICATION FACTOR (R) = 3
      11. ANALYSIS PROCEDURE:
          EQUIVALENT LATERAL FORCE

SPECIAL INSPECTIONS:

1. THE OWNER SHALL EMPLOY A QUALIFIED TESTING AGENT/ENGINEER TO PROVIDE SPECIAL INSPECTIONS. SPECIAL INSPECTORS SHALL SUBMIT RESUME OF EXPERIENCE AND QUALIFICATIONS OF ALL INDIVIDUALS PERFORMING WORK TO THE ARCHITECT/STRUCTURAL ENGINEER OF RECORD FOR APPROVAL PRIOR TO ANY WORK BEING PERFORMED. SPECIAL INSPECTIONS SHOULD BE IN ACCORDANCE WITH THE INTERNATIONAL BUILDING CODE, 2018 ED. AND AS INDICATED IN THE SPECIFICATIONS.

STATE OF ALABAMA
THOMAS M. McELRATH
3072
GADSDEN, ALABAMA
REGISTERED ARCHITECTS

THOMAS M. McELRATH, ARCHITECT
ARCHITECTURE and SPACE PLANNING
717 MERIT SPRINGS ROAD
GADSDEN, ALABAMA 35901
PHONE: (256) 490-8244
EMAIL: TOM@TMM-ARCHITECT.COM

A NEW SENIOR WELLNESS CENTER
at
2829 W. Meighan Boulevard
for
THE CITY of GADSDEN, ALABAMA

GENERAL NOTES

DRAWN	KLO
CHECKED	KLO
SCALE	AS NOTED
DATE	SEPTEMBER 15, 2022
FILE	
JOB NO.	22-01
REVISIONS	

STATE OF ALABAMA
No. 19873
PROFESSIONAL
9/15/22
LICENSED
KEITH L. OWENS

MBA ENGINEERS, INC.
STRUCTURAL CIVIL GEOTECHNICAL

SHEET
S1.0
OF
SHEETS

FILE: 22085-NOTES.dwg TAB:S1.0 PD:11/4/2005 11:04 AM PB:Troy Point

COMPONENTS AND CLADDING DESIGN WIND PRESSURES (PSF)

ZONE	EFFECTIVE WIND AREA									
	10 SF		20 SF		50 SF		100 SF		200 SF	
	XXX	-XXX	XXX	-XXX	XXX	-XXX	XXX	-XXX	XXX	-XXX
1	18	-42	16	-42	14	-36	12	-31	12	-31
2e	18	-42	16	-42	14	-36	12	-31	12	-31
2n	18	-67	16	-59	14	-48	12	-39	12	-39
2r	18	-67	16	-59	14	-48	12	-39	12	-39
3e	18	-67	16	-59	14	-48	12	-39	12	-39
3r	18	-86	16	-70	14	-50	12	-39	12	-39
2OH	-	-98	-	-89	-	-76	-	-66	-	-50
3OH	-	-130	-	-111	-	-88	-	-84	-	-66
4	30	-32	28	-31	27	-29	25	-28	25	-84
5	30	-40	28	-37	27	-33	25	-31	25	-28
1OP	38	-38	37	-38	37	-38	37	-38	38	-31
2OP	56	-57	56	-57	55	-56	55	-56	36	-37
3OP	74	-76	74	-76	55	-56	55	-56	36	-37

NOTE:
1. PLUS AND MINUS SIGNS DENOTE PRESSURE ACTING TOWARD AND AWAY FROM BUILDING SURFACES.
2. PRESSURE ZONE LOCATIONS ARE IN ACCORDANCE WITH ASCE 7-16.
3. PRESSURES INDICATED ARE BASED ON ULTIMATE WIND SPEEDS PER ASCE 7-16. TO CONVERT PRESSURES TO NOMINAL LOADS, MULTIPLY VALUES IN CHART BY A FACTOR OF 0.6.
4. a = 7'

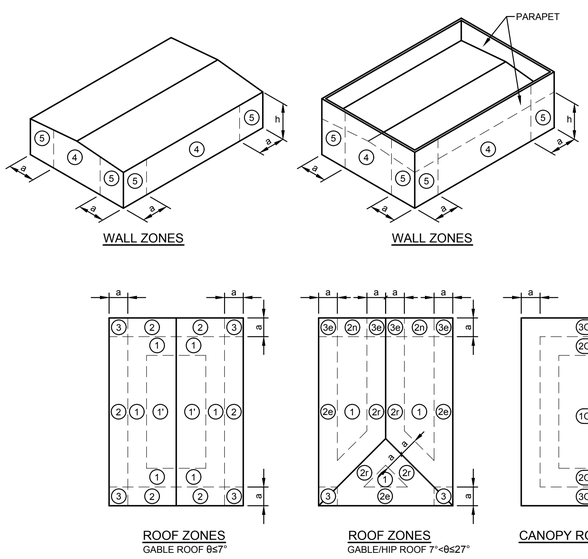

ZONE LAYOUT DIAGRAMS

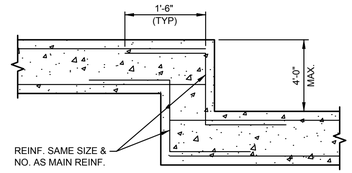

TYPICAL FOOTING STEP DETAIL

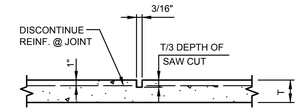

TYPICAL SAWED CONTROL JOINT

NOTES:
1. USE SAWS, BLADES AND SKID PLATES BY SOFF-CUT INTERNATIONAL OR EQUAL.
2. SEE PLAN FOR JOINT LAYOUT OR PROVIDE @ 12'-0" OC. MAX. EA. WAY.
3. START CUTTING SAWED JOINTS AS SOON AS CONCRETE HAS HARDENED SUFFICIENTLY TO PREVENT RAVELING OR DISLODGING OF AGGREGATES. THIS WILL TYPICALLY BE FROM 1 HOUR IN HOT WEATHER TO 4 HOURS IN COLD WEATHER AFTER COMPLETING FINISHING OF SLAB IN THAT JOINT LOCATION.
4. EXTEND SAWED JOINT TO THE SLAB BOUNDARIES AND ABUTMENTS, INCLUDING COLUMNS, DRAINS AND OTHER PENETRATIONS IN THE PATH OF A DEFINED JOINT. IMPLEMENT METHODS AND TIMING OF THE SAW CUT BEYOND THE LIMITS OF THE SOFF-CUT SAW REACH TO PROVIDE A CONSISTENT DEPTH OF CUT WITH MINIMAL RAVELING OF JOINT EDGES.
5. T = SLAB THICKNESS (SEE PLAN).

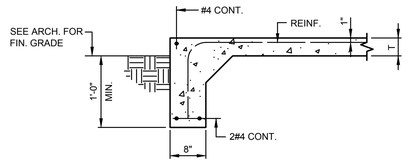

TYPICAL TURNDOWN SLAB DETAIL

NOTE:
T = SLAB THICKNESS (SEE PLAN)

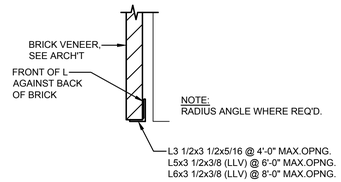

TYPICAL LOOSE LINTEL DETAILS

NOTE: BEAR LINTELS 6" MIN. EACH SIDE OF OPENING

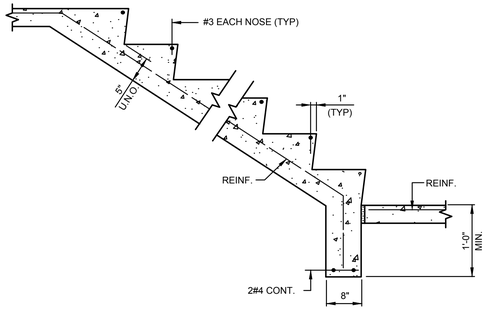

TYPICAL STAIR ON GRADE

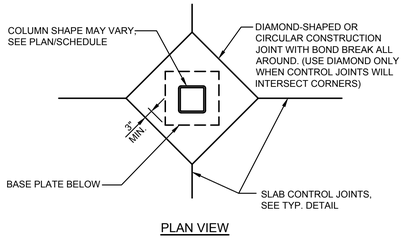

PLAN VIEW

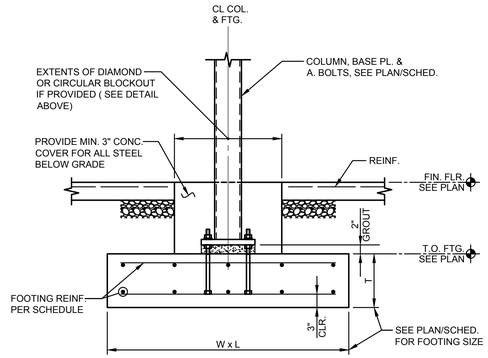

SECTION VIEW (NO PEDESTAL)

TYPICAL COLUMN FOOTING DETAILS

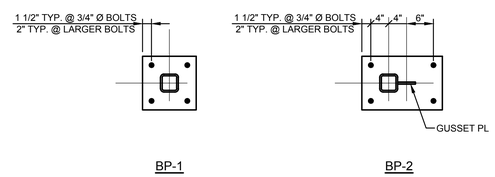

TYPICAL BASE PLATE DETAILS

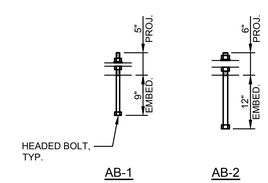

TYPICAL ANCHOR BOLT DETAILS

USE ASTM F1554 GRADE 55 WITH WELDABILITY SUPPLEMENT
S1 FOR ALL ANCHOR BOLTS UNO.

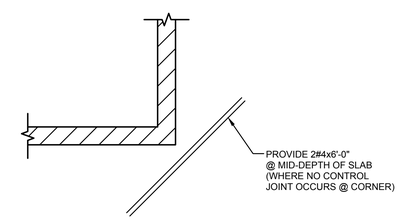

@ RE-ENTRANT CORNERS

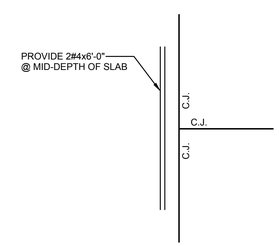

@ DISCONTINUOUS CONTROL JOINTS

TYPICAL ADDITIONAL REINFORCING @ SLAB ON GRADE

STATE OF ALABAMA
THOMAS M. McELRATH
3072
GADSDEN, ALABAMA
REGISTERED ARCHITECTS

THOMAS M. McELRATH, ARCHITECT
ARCHITECTURE and SPACE PLANNING
717 MERIT SPRINGS ROAD
GADSDEN, ALABAMA 35901
PHONE: (256) 490-8244
EMAIL: TOM@TMM-ARCHITECT.COM

A NEW SENIOR WELLNESS CENTER
at
2829 W. Meighan Boulevard
for
THE CITY of GADSDEN, ALABAMA

GENERAL NOTES

DRAWN	KLO
CHECKED	KLO
SCALE	AS NOTED
DATE	SEPTEMBER 15, 2022
FILE	
JOB NO.	22-01
REVISIONS	

STATE OF ALABAMA
No. 19873
PROFESSIONAL
9/15/22
ENGINEER
KEITH L. OWENS

MBA ENGINEERS, INC.
STRUCTURAL CIVIL GEOTECHNICAL

SHEET
S1.1
OF
SHEETS

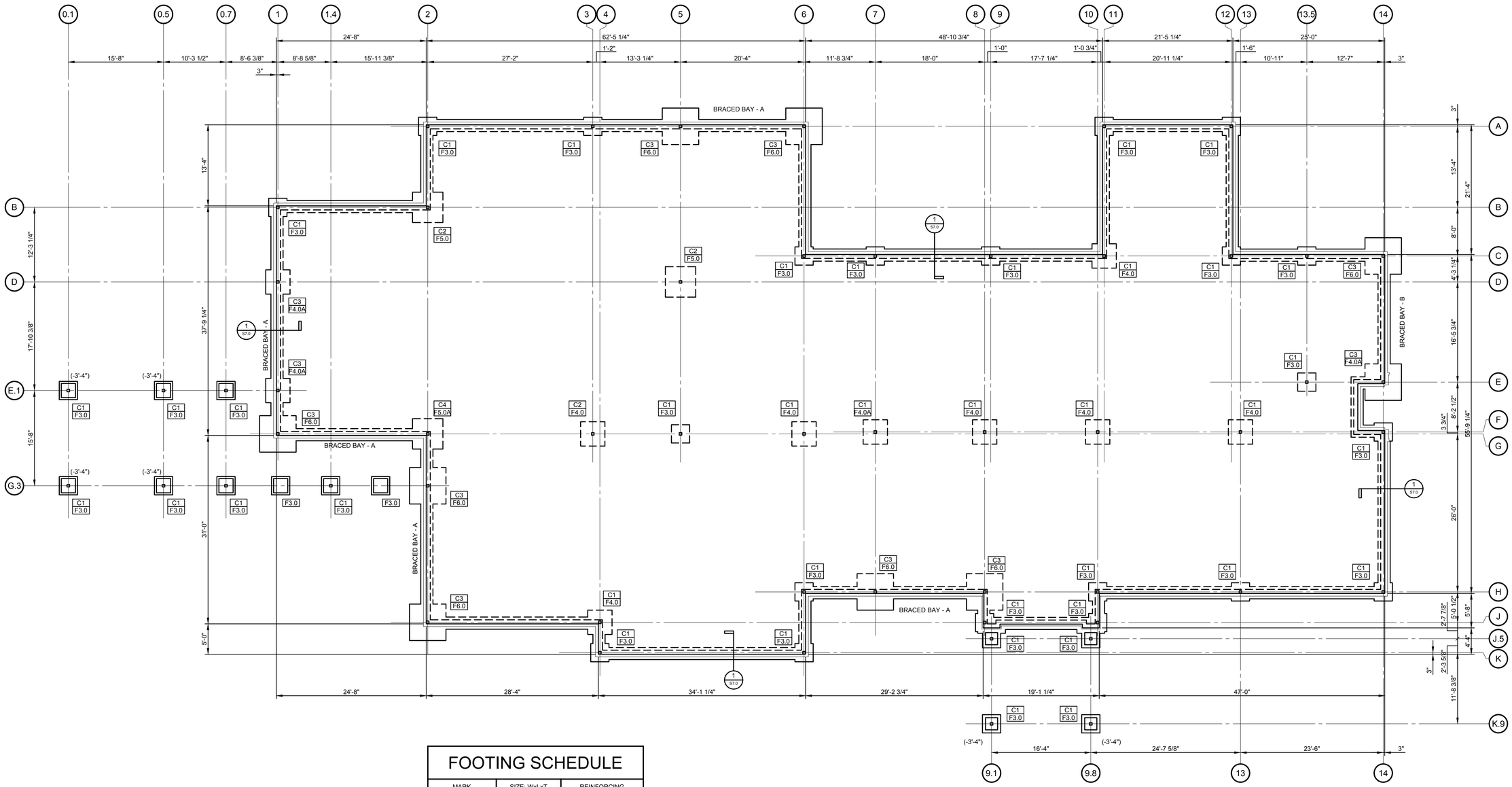

FOUNDATION & FLOOR PLAN

1/8" = 1'-0" FIN. FLR. ELEV. 0'-0"

FLOOR CONSTRUCTION:
4" CONC. SLAB ON DRAINAGE FILL.
REINF. W/ 6x6-W1.4xW1.4 W.W.R.

NOTES:
1. TOP OF FOOTING ELEV. (-2'-0") U.N.O.

FOOTING SCHEDULE

MARK	SIZE: WxLxT	REINFORCING
F3.0	3'-0"x3'-0"x12"	3#5 EW. BOTTOM
F4.0	4'-0"x4'-0"x12"	4#5 EW. BOTTOM
F4.0A	4'-0"x4'-0"x24"	4#5 EW. TOP & BOTTOM
F5.0	5'-0"x5'-0"x14"	5#5 EW. BOTTOM
F5.0A	5'-0"x5'-0"x18"	5#5 EW. TOP & BOTTOM
F6.0	6'-0"x6'-0"x24"	7#5 EW. TOP & BOTTOM

COLUMN SCHEDULE

MARK	SIZE	BASE PLATE	BASE PLATE DETAIL	ANCHOR BOLTS	ANCHOR BOLTS DETAIL	REMARKS
C1	HSS5x5x1/4	12x3/4x1'-0"	BP-1	4-3/4"Ø	AB-1	
C2	HSS5x5x3/8	12x3/4x1'-0"	BP-1	4-3/4"Ø	AB-1	
C3	HSS5x5x1/4	18x1x1'-0"	BP-2	6-1"Ø	AB-2	
C4	HSS5x5x3/8	18x1x1'-0"	BP-2	6-1"Ø	AB-2	

STATE OF ALABAMA
THOMAS M. McELRATH
3072
GADSDEN, ALABAMA
REGISTERED ARCHITECTS

THOMAS M. McELRATH, ARCHITECT
ARCHITECTURE and SPACE PLANNING
717 MERIT SPRINGS ROAD
GADSDEN, ALABAMA 35901
PHONE: (256) 490-8244
EMAIL: TOM@TMM-ARCHITECT.COM

A NEW SENIOR WELLNESS CENTER
at
2829 W. Meighan Boulevard
for
THE CITY of GADSDEN, ALABAMA

FOUNDATION & FLOOR PLAN

DRAWN	KLO
CHECKED	KLO
SCALE	AS NOTED
DATE	SEPTEMBER 15, 2022
FILE	
JOB NO.	22–01
REVISIONS	

ALABAMA LICENSED No. 19873 PROFESSIONAL ENGINEER KEITH L. OWENS 9/15/22

MBA ENGINEERS, INC.
STRUCTURAL CIVIL GEOTECHNICAL

SHEET S2.0 OF SHEETS

FILE: 22085-PLANS.dwg TAB:S2.0 PD:11/4/2005 11:04 AM PB:Troy Polat

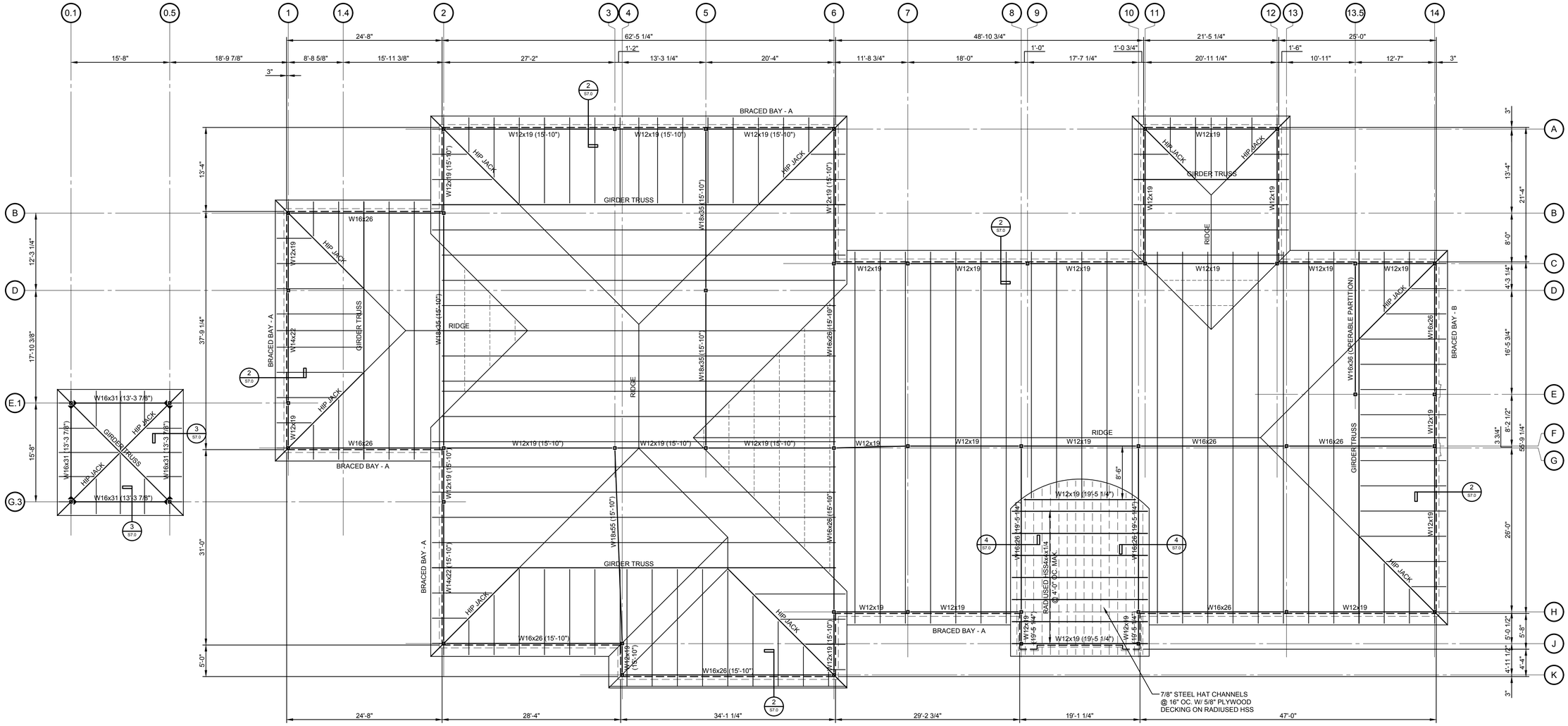

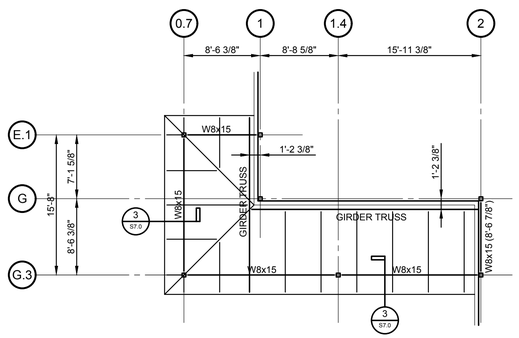

LOW ROOF FRAMING PLAN

1/8" = 1'-0"

ROOF CONSTRUCTION:
1 1/2" DEEP, 22 GA. GALV., WIDE RIB (TYPE "B") METAL ROOF DECK.

NOTES:
1. TOP OF STEEL ELEV. (7'-10 7/8") U.N.O.

ROOF FRAMING PLAN

1/8" = 1'-0"

ROOF CONSTRUCTION:
1 1/2" DEEP, 22 GA. GALV., WIDE RIB (TYPE "B") METAL ROOF DECK.

NOTES:
1. TOP OF STEEL ELEV. (13'-10") U.N.O.
2. ▶ - DENOTES MOMENT CONNECTION.

STATE OF ALABAMA
THOMAS M. McELRATH
3072
GADSDEN, ALABAMA
REGISTERED ARCHITECTS

THOMAS M. McELRATH, ARCHITECT
ARCHITECTURE and SPACE PLANNING
717 MERIT SPRINGS ROAD
GADSDEN, ALABAMA 35901
PHONE: (256) 490-8244
EMAIL: TOM@TMM-ARCHITECT.COM

A NEW SENIOR WELLNESS CENTER
at
2829 W. Meighan Boulevard
for
THE CITY of GADSDEN, ALABAMA

ROOF FRAMING PLAN

DRAWN	KLO
CHECKED	KLO
SCALE	AS NOTED
DATE	SEPTEMBER 15, 2022
FILE	
JOB NO.	22-01
REVISIONS	

STATE OF ALABAMA
LICENSED
No. 19873
PROFESSIONAL
ENGINEER
KEITH L. OWENS
9/15/22

MBA ENGINEERS, INC.
STRUCTURAL CIVIL GEOTECHNICAL

SHEET
S2.1
OF
SHEETS

FILE: 22085-PLANS.dwg TAB:S2.1 PD:11/4/2005 11:04 AM PB:Troy Poist

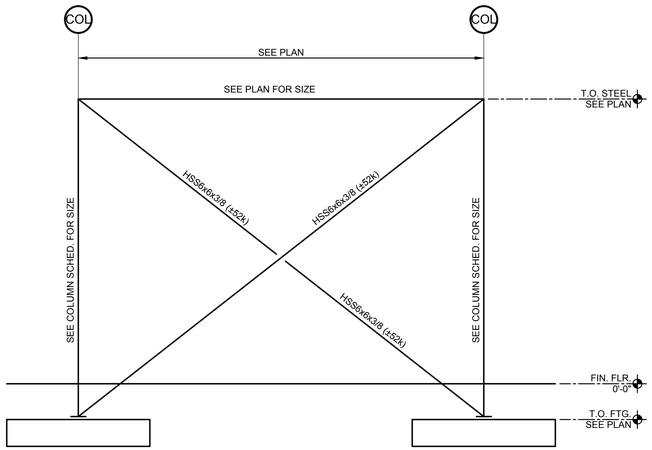

BRACED BAY - A

NTS

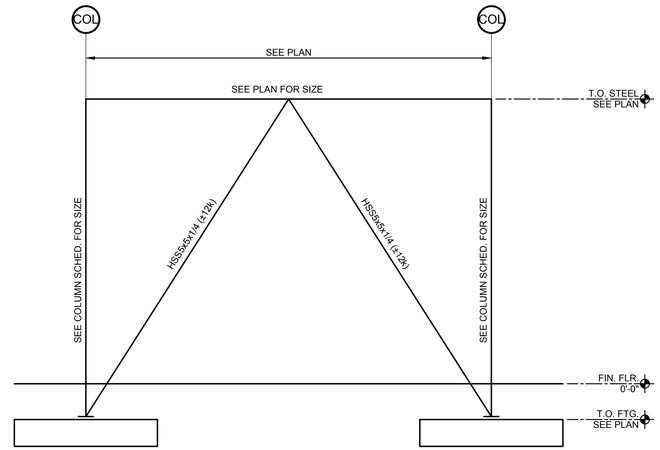

BRACED BAY - B

NTS

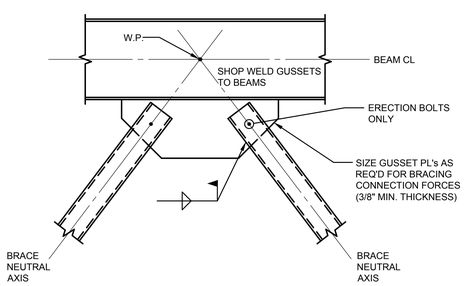

AT BEAMS - INVERTED "V" INTERSECTION

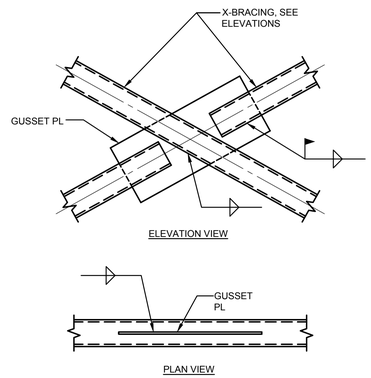

AT INTERSECTION

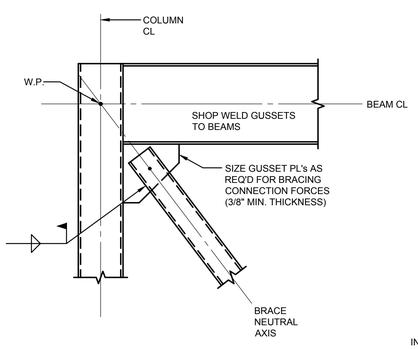

AT BEAMS - TUBE COL.

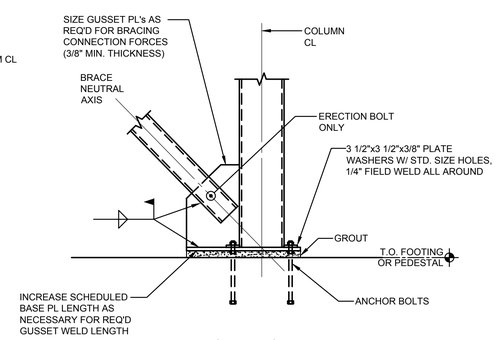

AT BASEPLATES

TYPICAL BRACING CONNECTION DETAILS

BRACING NOTES:

1. MEMBER DESIGN FORCES SHOWN ( ) ARE SERVICE LEVEL (UNFACTORED) PER IBC 2018 ALLOWABLE STRESS DESIGN LOAD COMBINATIONS
   + DENOTES TENSION
   - DENOTES COMPRESSION
2. ALL FIELD CONNECTIONS SHALL BE WELDED. FIELD BOLTING W/ 3/4" DIA. A-325 BOLTS SHALL BE ALLOWED FOR ERECTION PURPOSES ONLY.
3. ALL SHOP CONNECTIONS SHALL BE WELDED.
4. BRACING CONNECTIONS SHALL BE DESIGNED FOR THE FULL DESIGN AXIAL FORCE AS SHOWN.
5. LAY OUT MEMBERS SO THAT NEUTRAL AXIS OR GAGE LINES OF MEMBERS INTERSECT AT PANEL POINTS AND WORKING POINTS.

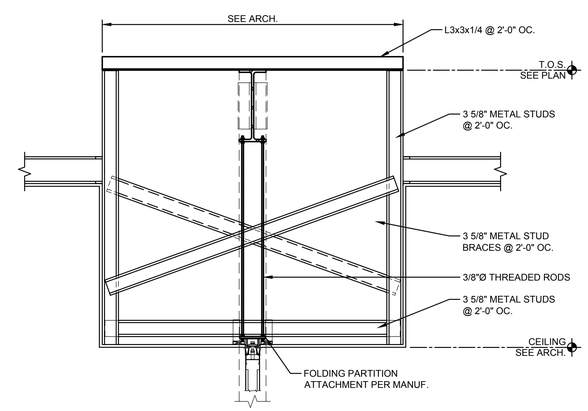

TYPICAL OPERABLE PARTITION SUPPORT DETAIL

MBA ENGINEERS, INC.
STRUCTURAL CIVIL GEOTECHNICAL

STATE OF ALABAMA
THOMAS M. McELRATH
3072
GADSDEN ALABAMA
REGISTERED ARCHITECTS

THOMAS M. McELRATH, ARCHITECT
ARCHITECTURE and SPACE PLANNING
717 MERIT SPRINGS ROAD
GADSDEN, ALABAMA 35901
PHONE: (256) 490-8244
EMAIL: TOM@TMM-ARCHITECT.COM

A NEW SENIOR WELLNESS CENTER
at
2829 W. Meighan Boulevard
for
THE CITY of GADSDEN, ALABAMA

BRACED BAYS & TYPICAL DETAILS

DRAWN	KLO
CHECKED	KLO
SCALE	AS NOTED
DATE	SEPTEMBER 15, 2022
FILE	
JOB NO.	22-01
REVISIONS	

SHEET S3.0 OF SHEETS

FILE: 22085-NOTES.dwg TAB:S3.0 PD:11/4/2005 11:04 AM PB:Troy Point

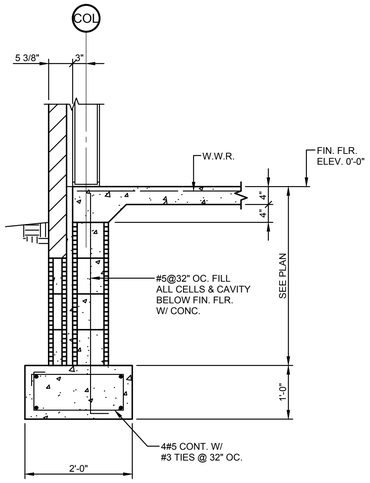

1 S7.0 **SECTION**
3/4" = 1'-0"

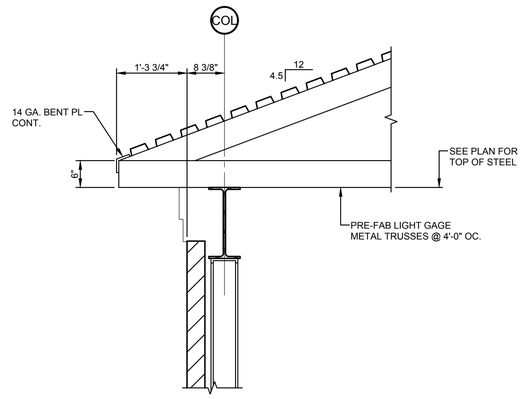

2 S7.0 **SECTION**
3/4" = 1'-0"

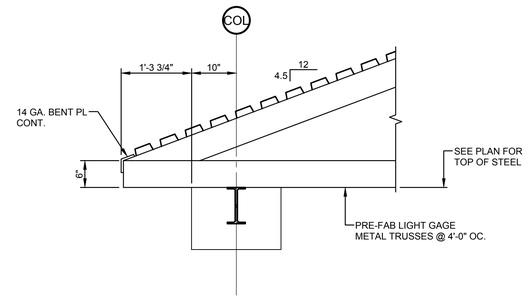

3 S7.0 **SECTION**
3/4" = 1'-0"

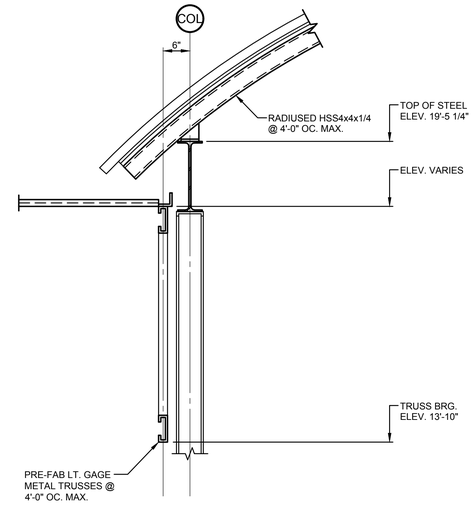

4 S7.0 **SECTION**
3/4" = 1'-0"

STATE OF ALABAMA
THOMAS M. McELRATH
3072
GADSDEN ALABAMA
REGISTERED ARCHITECTS

THOMAS M. McELRATH, ARCHITECT
ARCHITECTURE and SPACE PLANNING
717 MERIT SPRINGS ROAD
GADSDEN, ALABAMA 35901
PHONE: (256) 490-8244
EMAIL: TOM@TMM-ARCHITECT.COM

A NEW SENIOR WELLNESS CENTER
at
2829 W. Meighan Boulevard
for
THE CITY of GADSDEN, ALABAMA

SECTIONS

DRAWN	KLO
CHECKED	KLO
SCALE	AS NOTED
DATE	SEPTEMBER 15, 2022
FILE	
JOB NO.	22-01
REVISIONS	

STATE OF ALABAMA
No. 19873
PROFESSIONAL
ENGINEER
KEITH L. OWENS
9/15/22

MBA ENGINEERS, INC.
STRUCTURAL CIVIL GEOTECHNICAL

SHEET
S7.0
OF
SHEETS

FIRE PROTECTION GENERAL NOTES

1. CONTRACTOR SHALL VERIFY EXISTING CONDITIONS PRIOR TO BID. CONTRACTOR SHALL VERIFY EXACT SIZE, LOCATION, ELEVATION OF EXISTING STRUCTURE, CEILINGS, MECHANICAL, AND ELECTRICAL PRIOR TO INSTALLING ANY NEW PIPE.
2. CONTRACTOR SHALL COORDINATE ALL PIPE ROUTING TO AVOID CONFLICTS WITH ALL STRUCTURAL, ELECTRICAL, AND MECHANICAL FEATURES OF THE BUILDING.
3. ALL HORIZONTAL PIPING IS RUN ABOVE THE CEILING OR IN JOIST SPACE. ALL PIPING SHALL DRAIN DOWN AS REQUIRED BY NFPA 13. PIPING TO BE INSTALLED TO CONCEAL AS MUCH AS POSSIBLE.
4. INSTALL ALL FIRE PROTECTION MATERIALS IN AREAS WITH EXPOSED CEILINGS IN A NEAT FIRST CLASS MANNER. ALL WORKMANSHIP SHALL BE IN ACCORDANCE WITH INDUSTRY BEST PRACTICES. PIPING SHALL BE INSTALLED PARALLEL AND/OR PERPENDICULAR TO BUILDING STRUCTURE UNLESS INDICATED OTHERWISE.
5. CONTRACTOR IS RESPONSIBLE FOR NOTIFYING PROJECT ENGINEERS FOR INSPECTION AND TESTING. PROVIDE A MINIMUM OF A WEEK.
6. CONTRACTOR TO REFER TO ARCHITECTURAL DRAWINGS FOR NEW WORK AREAS, CEILING HEIGHTS, SECTIONS, AND RATED WALLS.
7. CONTRACTOR RESPONSIBLE FOR COORDINATION OF PIPING WEIGHT AND LOCATION PRIOR TO INSTALLATION OF ANY PIPE.
8. PIPING LAYOUT AND SIZING SHOWN ON PLANS IS DIAGRAMMATIC AND SHOWN FOR SPACE REQUIREMENTS. CONTRACTOR IS RESPONSIBLE FOR LAYOUT SHOP DRAWINGS, CALCULATIONS, SUBMITTAL DATA, TESTING, OWNER TRAINING AND CERTIFYING SYSTEM MEETS NFPA 13 AND CONTRACT DOCUMENTS.
9. CONTRACTOR SHALL OBTAIN APPROVAL FROM ARCHITECT PRIOR TO INSTALLING ANY SPRINKLER HEADS DIFFERENT FROM THE SPECIFIED SPRINKLERS HEADS.
10. CONTRACTOR SHALL OBTAIN APPROVAL OF "SPRINKLER HEAD TYPE" FROM ARCHITECT PRIOR TO INSTALLING ANY SPRINKLER HEADS.
11. CONTRACTOR SHALL PAINT ALL EXPOSED PIPING TO MATCH STRUCTURE. COORDINATE EXACT COLOR WITH ARCHITECT.

FIRE PROTECTION SHOP DRAWINGS AND SUBMITTALS

1. PROVIDE A NFPA 13 COMPLIANT SYSTEM TO PROVIDE COVERAGE TO NEW WORK AREA. CONTRACTOR RESPONSIBLE TO PROVIDE DETAILED SHOP DRAWINGS AND CALCULATIONS COMPLETE.
2. SHOP DRAWINGS SHALL INCLUDE:

A. A REFLECTED CEILING PLAN INDICATING LOCATION OF SPRINKLER HEADS, LIGHTS, CEILING DEVICES, GRILLES, AUDIO VISUAL AND ANY DEVICES ATTACHED TO LIFT OUT CEILINGS. ALL SPRINKLER HEADS IN LAYIN CEILINGS TO BE CENTERED IN TILES.
B. PREPARE A WORKING PIPE SHOP DRAWING BASED ON HYDRAULIC CALCULATIONS. THE PIPING DRAWINGS SHALL INDICATE THE ELEVATION OF THE PIPE, THE CONFIGURATION OF THE PIPING AND HANGERS, SIZE OF THE PIPE AND COORDINATION OF PIPING WITH OTHER DISCIPLINES, STRUCTURE AND DUCTWORK.
C. HYDRAULIC CALCULATIONS ARE TO BE PREPARED USING A FLOW TEST WITHIN 90 DAYS.
D. THE CONTRACTOR IS RESPONSIBLE FOR INCORPORATING LOCAL AUTHORITY HAVING JURISDICTION COMMENTS FOR COMPLIANCE.
E. ALL ADDITIONAL MATERIALS TO BE INDICATED ON SHOP DRAWINGS.
F. ALL LOW-POINT DRAIN DOWN LOCATION AND PENETRATIONS OF BUILDING STRUCTURE TO BE INDICATED ON SHOP DRAWINGS.

3. CONTRACTOR SHALL BE LICENSED IN THE STATE IN WHICH THE WORK IS PREFORMED. THE CONTRACTOR SHALL BE A NICET LEVEL III OR LEVEL IV OR SPECIAL HAZARD SUPPRESSION SYSTEMS. THE NICET LEVEL III DESIGNER SHALL BE AN EMPLOYEE OF FIRE PROTECTION CONTRACTOR.
4. ALL ELECTRICAL FIRE ALARM REQUIREMENTS TO BE COORDINATED WITH THE ELECTRICAL. THE FLOW AND TAMPER SWITCHES TO BE PROVIDED UNDER FIRE PROTECTION CONTRACT. CONDUIT, ALARM WIRING AND PROGRAMMING THE RESPONSIBILITY OF THE FIRE ALARM CONTRACT AND SHALL BE COORDINATED WITH ELECTRICAL.
5. CONTRACTOR SHALL PROVIDE SHOP DRAWINGS WITHIN 45 DAYS PRIOR TO THE START OF THE SPRINKLER SYSTEM INSTALLATION.
6. HYDRAULIC CALCULATIONS AND SPRINKLER SHOP DRAWINGS SHALL BE PREPARED UNDER THE SUPERVISION OF AN ENGINEER LICENSED IN THE STATE OF ALABAMA AND BEAR HIS OR HER SEAL WITH SIGNATURE AND DATE.

FIRE PROTECTION HYDRAULIC DEMANDS

1. SPRINKLER PROTECTION
   A. ALL OFFICES, LOBBIES, VESTIBULES, BILLARD/CARD ROOMS, FITNESS AREAS, CLASSROOMS, TOILETS, COMMON AREAS, CORRIDORS: LIGHT HAZARD 0.10 GPM OVER HYDRAULICALLY MOST REMOTE 1500 SQ. FT.
   B. MECHANICAL EQUIPMENT ROOMS, TRANSFORMER ROOMS, GENERAL PURPOSE STORAGE LESS THAN 100 SQ. FT.: ORDINARY HAZARD, GROUP 2, 0.20 GPM OVER HYDRAULICALLY MOST REMOTE 2000 SQ. FT.
   C. GENERAL STORAGE, STORAGE HEIGHT LIMIT LESS THAN 12FT, LIMITED COMBUSTIBLES LESS THAN 25 GALLONS: ORDINARY GROUP 1 PER NFPA 13, 0.15 GPM PER 1500 SQ. FT.
2. HYDRAULIC CALCULATION SHALL BE CALCULATED WITH 10% SAFETY FACTOR OF SUPPLY CURVE.
3. FLOW DATA TO BE RESPONSIBILITY OF CONTRACTOR.

FIRE PROTECTION DESIGN ANALYSIS

REFER TO ARCHITECTURAL PLANS FOR COMPLIANCE NFPA 101
TYPE OF CONSTRUCTION: REFER TO ARCHITECTURAL

OCCUPANCY: REFERENCE ARCHITECTURAL LIFE SAFETY PLAN

FIRE DESIGN CODES /STANDARDS

APPLICABLE CODES AND STANDARDS:
INTERNATIONAL BUILDING CODE (IBC)
INTERNATIONAL FIRE CODE (IFC)
INTERNATIONAL PLUMBING CODE (IPC)
NATIONAL ELECTRIC CODE (NEC)
NATIONAL FIRE ALARM CODE NFPA 72
NATIONAL ENERGY CODE
NATIONAL FIRE PROTECTION ASSOCIATION (NFPA) 13,24,101

FIRE PROTECTION LEGEND

FIRE MAIN (F)	—— F —— F ——
BALL VALVE	
	PIPE DOWN
	PIPE UP
GPM	GALLONS PER MINUTE
PSI	POUNDS PER SQUARE INCH
(S)C	CONCEALED PENDENT SPRINKLER HEAD (COVER SHALL BE FACTORY PAINTED W/ COLOR APPROVED BY ARCHITECT)
(S)U	UPRIGHT SPRINKLER HEAD
ARCHITECT TO SELECT COLORS ON ALL SPRINKLER HEADS	

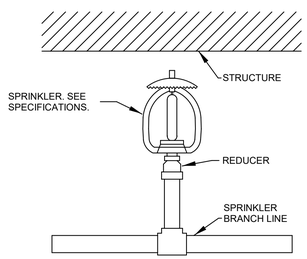

QUICK RESPONSE UPRIGHT SPRINKLER
NO SCALE

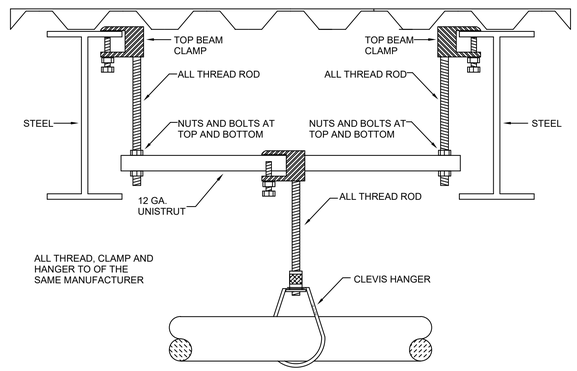

TRAPEZE HANGER DETAIL - UNISTRUT
NO SCALE

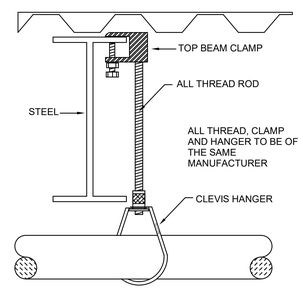

TOP BEAM CLAMP DETAIL
NO SCALE

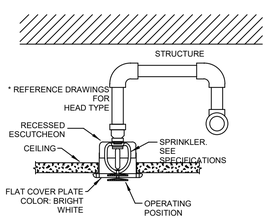

QUICK RESPONSE CONCEALED SPRINKLER
NO SCALE

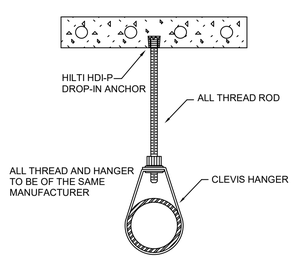

DROP-IN DETAIL
NO SCALE

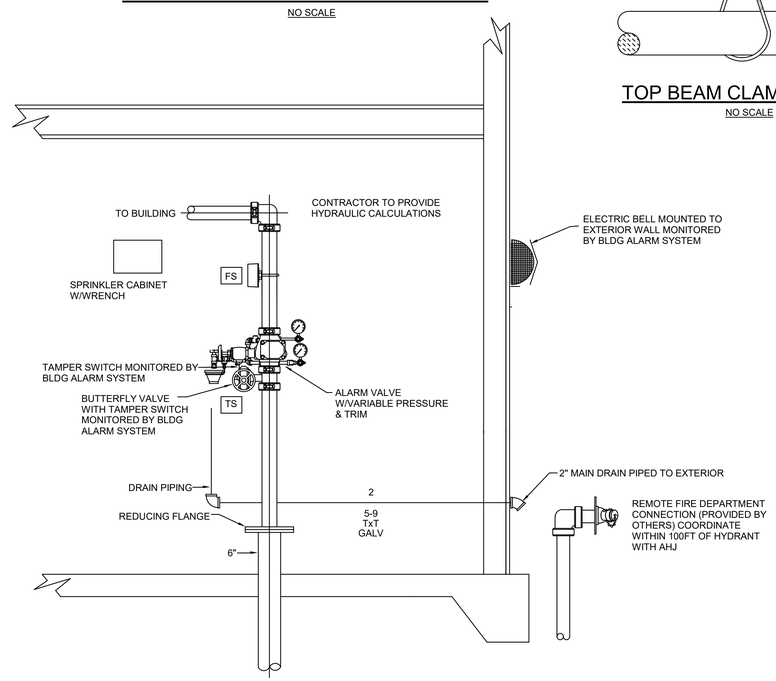

FIRE SERVICE ENTRY - BUILDING
NO SCALE

Dewberry | EDMONDS
2 Riverchase Office Plaza
Suite 205
Hoover, AL 35244
(205) 988-2069
www.dewberry.com
Project Number : 50155636

LA BIG
No. 24747
PROFESSIONAL
09-15-2022
ENGINEER
WADE STEWART

THOMAS M. McELRATH, ARCHITECT
ARCHITECTURE and SPACE PLANNING
717 MERIT SPRINGS ROAD
GADSDEN, ALABAMA 35901
PHONE: (256) 490-8244
EMAIL: TOM@TMM-ARCHITECT.COM

A NEW SENIOR WELLNESS CENTER
2829 W. Meighan Boulevard
for the
City of Gadsden, Alabama

DRAWN	ALV
CHECKED	SMC
SCALE	AS NOTED
DATE	09/15/2022
FILE	
JOB NO.	22-01
REVISIONS	

SHEET FP0.1 OF X NUMBER

Dewberry | EDMONDS
2 Riverchase Office Plaza
Suite 205
Hoover, AL 35244
(205) 988-2069
www.dewberry.com
Project Number :
50155636

STATE OF ALABAMA
No. 24747
PROFESSIONAL
09-15-2022
ENGINEER
WADE STEWART

THOMAS M. McELRATH, ARCHITECT
ARCHITECTURE and SPACE PLANNING
717 MERIT SPRINGS ROAD
GADSDEN, ALABAMA 35901
PHONE: (256) 490-8244
EMAIL: TOM@TMM-ARCHITECT.COM

A NEW SENIOR WELLNESS CENTER
2829 W. Meighan Boulevard
for the
City of Gadsden, Alabama

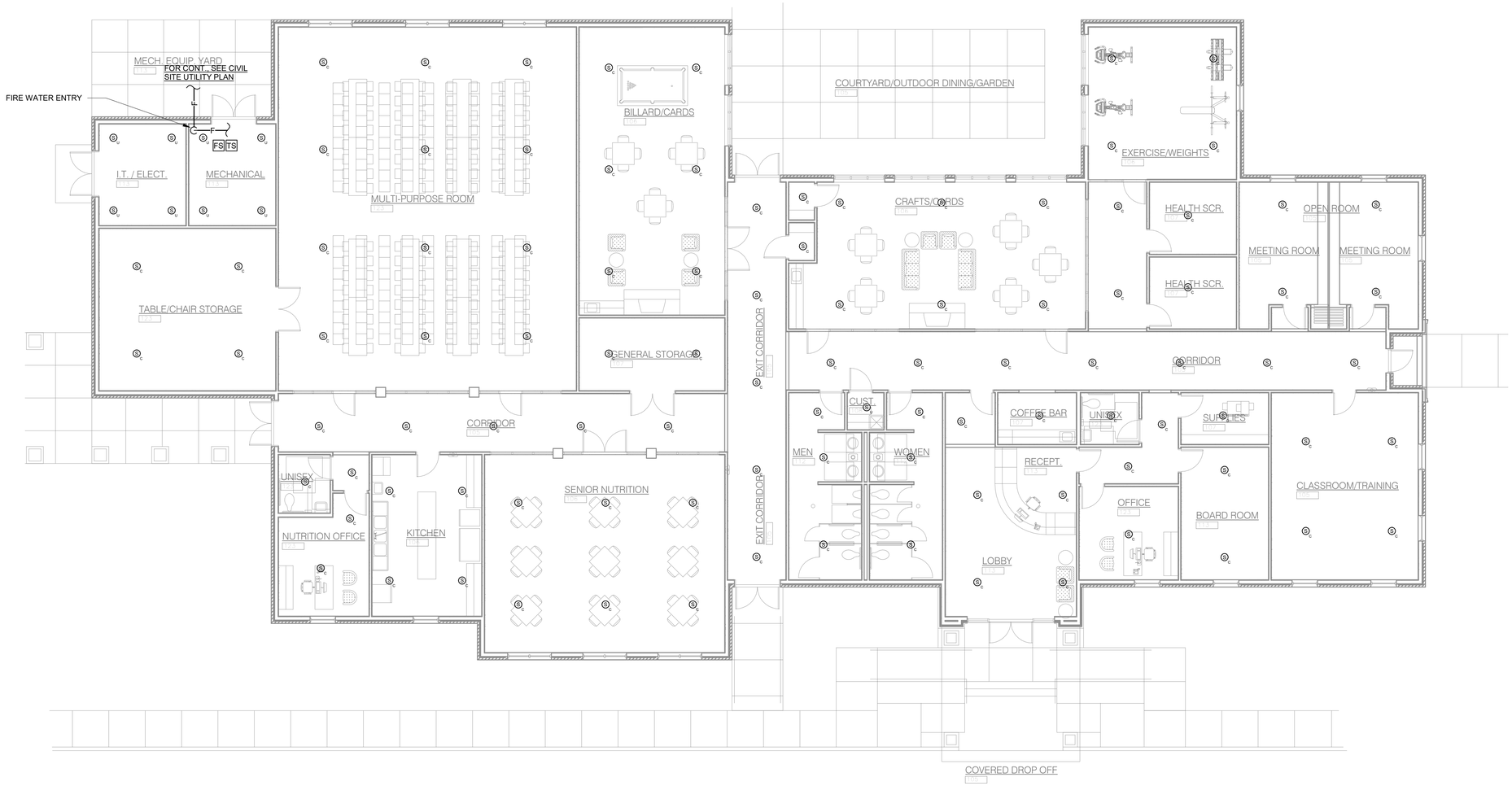

FIRE PROTECTION - FLOOR PLAN

1/8" = 1'-0"

PLAN NORTH

DRAWN	ALV
CHECKED	SMC
SCALE	AS NOTED
DATE	09/15/2022
FILE	
JOB NO.	22-01
REVISIONS	

SHEET
FP1.1
OF
XX
NUMBER

GENERAL NOTES

1. LOCATIONS OF UTILITIES SHOWN ON PLANS ARE APPROXIMATE. VERIFY WITH LOCAL UTILITY PRIOR TO BIDDING.
2. CONTRACTOR SHALL VERIFY EXACT LOCATION, SIZE, AND ELEVATION OF ALL EXISTING SERVICES PRIOR TO INSTALLING ANY NEW PIPE.
3. ALL OUTSIDE CLEANOUTS SHALL BE BROUGHT TO GRADE AND EMBEDDED IN 18"X18"X16" THICK CONCRETE PAD. (J.R. SMITH 4258 OR EQUAL.)
4. WHEREVER DISSIMILAR METALS ARE CONNECTED ON WATER LINES, A DIELECTRIC UNION SHALL BE USED.
5. ALL HORIZONTAL WATER AND VENT PIPING SHALL BE RUN ABOVE CEILING ON PLAN WHERE SHOWN UNLESS OTHERWISE NOTED.
6. ALL HORIZONTAL SANITARY PIPING IS RUN BELOW FLOOR ON PLAN WHERE SHOWN UNLESS OTHERWISE NOTED.
7. ALL WATER PIPING BELOW SLAB ON GRADE SHALL BE BENT UP AT ENDS SO THAT NO JOINTS OCCUR BELOW FLOOR.
8. COORDINATE ALL PIPE ROUTING TO AVOIDE CONFLICTS WITH STRUCTURAL, MECHANICAL, AND ELECTRICAL FEATURES OF BUILDING.
9. ALL WALL HYDRANTS AND HOSE BIBBS SHALL BE MOUNTED 24" ABOVE FINISH GRADE OF FINISH FLOOR UNLESS OTHERWISE NOTED.
10. ALL WATER PIPING INSTALLED IN EXTERIOR WALLS SHALL BE LOCATED ON THE INTERIOR SIDE OF THE EXTERIOR WALL INSULATION.
11. NO VENT THRU ROOF IS TO BE LOCATED WITHIN 10 FEET OF ANY BUILDING AIR INTAKES, PER CODE. COORDINATE WITH MECHANIAL AND GENERAL CONTRACTORS.
12. DOMESTIC WATER PIPING AND FIRE PROTECTION PIPING LOCATED ABOVE THE CEILING, SHALL BE INSTALLED BELOW CEILING INSULATION.
13. CONTRACTOR SHALL COORDINATE MECHANICAL FLOOR DRAIN LOCATIONS WITH MECHANICAL EQUIPMENT PRIOR TO INSTALLATION.
14. CONTRACTOR SHALL PROVIDE SHOCK ARRESTORS ON ALL BRANCH LINES.
15. CONTRACTOR SHALL COORDINATE ALL SINKS WITH CASEWORK PRIOR TO ORDERING SINKS.
16. DOMESTIC WATER PIPING SHALL NOT BE INSTALLED IN EXTERIOR WALLS.
17. PROVIDE DISINFECTION OF WATER PIPING SYSTEM WITH CHLORINE SOLUTION AS PER CODE.
18. INSTALLATION OF BACKFLOW PREVENTER SHALL COMPLY WITH CURRENT INTERNATIONAL BUILDING CODE AND CURRENT INTERNATIONAL PLUMBING CODE.
19. ALL OVERHEAD WATER PIPING TO BE RUN BELOW INSULATION AT BOTTOM OF TRUSSES FOR FREEZE PROTECTION.
20. ALL INDIRECT DRAINS TO HAVE INSULATED DEEP SEAL P-TRAPS.
21. ALL FLOOR DRAINS AND INDIRECT DRAINS TO HAVE INSULATED DEEP SEAL P-TRAPS WITH TRAP SEAL PROTECTION AS APPROVED BY LOCAL AUTHORITY.
22. ALL WALL HYDRANTS TO BE FREEZE PROOF AND TO HAVE VACUUM BREAKERS.
23. INSULATION ON ALL PIPING SHALL MEET SMOKE/ FLAME RATING OF 25 & 50.
24. NO JOINTS IN WATER PIPING BELOW SLAB.
25. THE LOCATION OF LAVATORIES AND WATER CLOSETS RELATIVE TO THE FINISHED WALL IS CRITICAL. REFER TO ARCHITECTURAL AND THE SPECIFICATIONS FOR ADDITIONAL INFORMATION. ALL WATER CLOSETS TO BE 18" FROM FINISH WALL TO CENTER OF WATER CLOSET.
26. WATER HAMMER ARRESTORS ARE REQUIRED TO PROTECT WATER PIPING SYSTEMS WHERE QUICK-CLOSING VALVES ARE UTILIZED. WATER HAMMER ARRESTORS SHALL CONFORM TO ASSE 1010.
27. THESE DRAWINGS NOT INTENDED TO SHOW ALL POSSIBLE CONDITIONS. IT IS INTENDED THAT A COMPLETE PLUMBING SYSTEM BE PROVIDED WITH ALL NECESSARY EQUIPMENT, APPURTENANCES AND CONTROLS, COMPLETELY COORDINATED WITH ALL DISCIPLINES. ALL PARAMETERS GIVEN IN THESE DOCUMENTS SHALL BE STRICTLY CONFORMED WITH ANY ITEMS AND LABOR REQUIRED FOR A COMPLETE PLUMBING SYSTEM IN ACCORDANCE WITH ALL APPLICABLE CODES, STANDARDS AND THESE CONTRACT DOCUMENTS SHALL BE FURNISHED WITHOUT INCURRING ANY ADDITIONAL COST TO THE PROJECT, CAREFULLY REVIEW ALL CONTRACT DOCUMENTS AND THE DESIGN OF OTHER TRADES BEFORE PREPARING SHOP DRAWINGS.
28. COORDINATE PLUMBING PIPING WITH STRUCTURAL, PLUMBING, HVAC, AND ELECTRICAL. MAKE OFFSETS AND TRANSITIONS TO COORDINATE WITH OTHER TRADES WITHOUT ANY ADDITIONAL COST TO THE PROJECT.
29. COORDINATE ALL PLUMBING IN SLAB WITH BUILDING FOOTINGS.
30. NO PIPING TO BE RUN ABOVE ELECTRICAL PANELS. MAINTAIN ALL REQUIRED CLEARANCES.
31. CONTRACTOR SHALL VISIT JOB SITE AND VERIFY EXISTING CONDITIONS BEFORE SUBMITTING A PRICE, ORDERING MATERIALS OR PERFORMING ANY WORK. NOTIFY THE ARCHITECT OF ANY DEVIATION FROM PLUMBING PLAN.
32. MAINTAIN A MAXIMUM OF 55 PSIG WATER PRESSURE AT PLUMBING FIXTURES, CONSISTENT WITH ADEQUATE FLOW RATES.
33. VENTS THRU ROOF MUST BE LOCATED A MINIMUM OF 10'-0" AWAY FROM ANY OUTSIDE AIR INTAKE.
34. SUPPORT PIPE AS REQUIRED BY THE CURRENT INTERNATIONAL PLUMBING CODE.
35. ALL FOOTINGS AT PLUMBING CHASE WALLS SHALL BE MIN 24" BELOW FINISHED GRADE TO COORDINATE WITH WASTE PIPING IN SLAB.
36. FIRESTOP ALL RATED WALL AND FLOOR PENETRATIONS. SEE ARCHITECTURAL DRAWINGS FOR RATED WALL AND FLOOR LOCATIONS.
37. OFFSET ALL VTR'S TO BACKSIDE OF ROOF RIDGE.
38. DO NOT BEGIN WORK UNTIL ELEVATION OF FINAL CONNECTION POINT IS VERIFIED AND GRADING OF ENTIRE SYSTEM CAN BE DETERMINED (EVEN IF FINAL CONNECTION IS SPECIFIED UNDER ANOTHER SECTION).

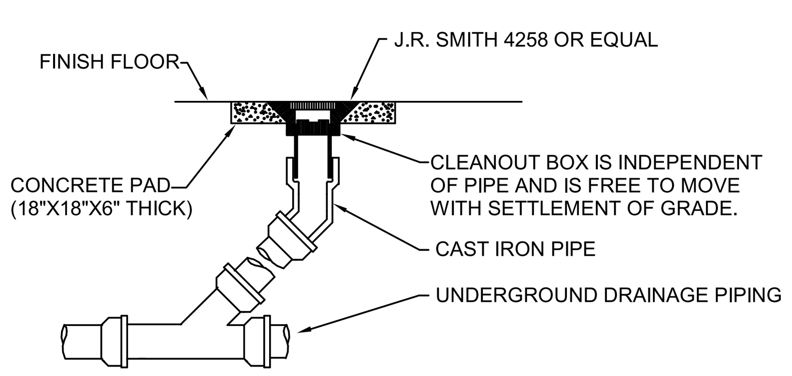

DETAIL OF CLEANOUT TO GRADE

NO SCALE

PLUMBING LEGEND

	DOMESTIC COLD WATER	CO	CLEANOUT
	DOMESTIC HOT WATER SUPPLY	FD	FLOOR DRAIN
	DOMESTIC HOT WATER RETURN	WH	WALL HYDRANT
	SOIL, WASTE, OR SANITARY SEWER	ABV	ABOVE
	VENT	AFF	ABOVE FINISHED FLOOR
	PIPE TURNING DOWN	BFF	BELOW FINISHED FLOOR
	PIPE TURNING UP	CW	COLD WATER
	TEE DOWN	DN	DOWN
	TEE UP	GPM	GALLONS PER MINUTE
	UNION	HW	HOT WATER
GW	GREASE WASTE	HWR	HOT WATER RETURN
	BALANCE VALVE	TYP	TYPICAL
	BALL VALVE	VS	VENT STACK
	CAP ON END OF PIPE	VSTR	VENT THROUGH ROOF
#	RISER NUMBER	MFD	MECHANICAL FLOOR DRAIN
P-#	PLUMBING FIXTURE	WS	WASTE STACK
WH - #	WATER HEATER		

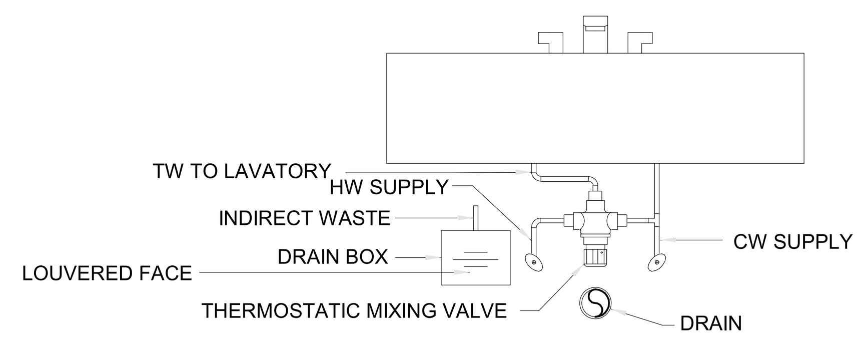

DETAIL OF DRAIN BOX & TMV AT LAVATORY/ SINK

NO SCALE

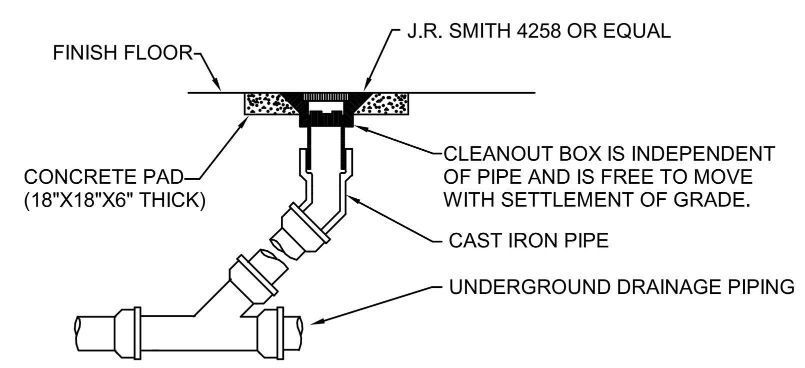

DETAIL OF CLEANOUT TO GRADE

NO SCALE

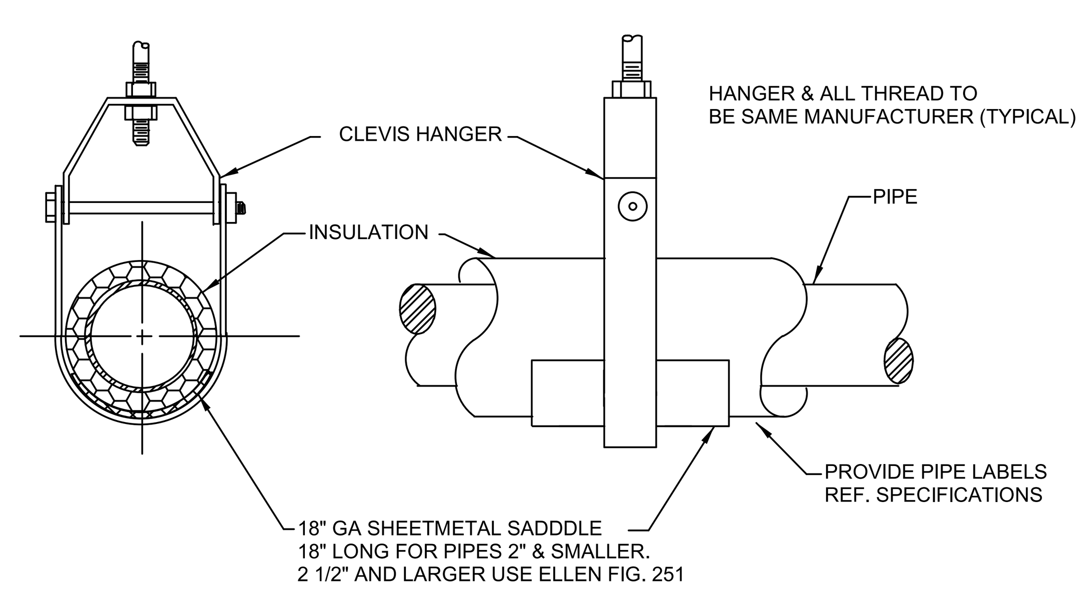

SUSPENDED PIPE SUPPORT

NO SCALE

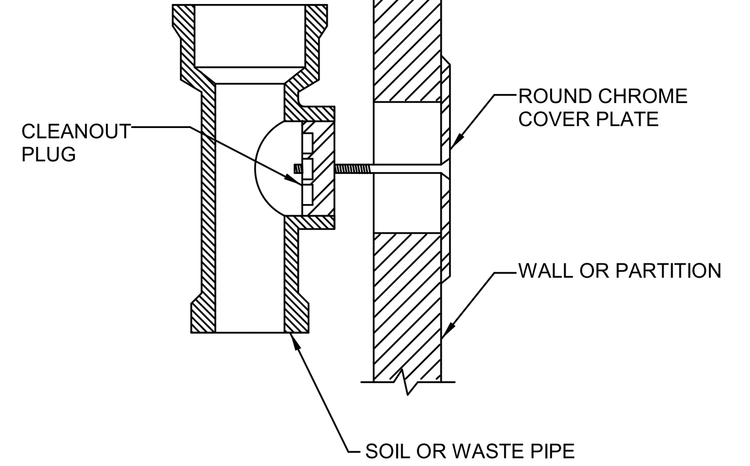

WALL CLEANOUT

NO SCALE

PLUMBING FIXTURE SCHEDULE

MARK	FIXTURE	WASTE	CW	HW	REMARKS
FD	FLOOR DRAIN	3"	-	-	J.R. SMITH #2010 WITH 6" ROUND NICKEL BRONZE GRATE. PROVIDE WITH J.R. SMITH TRAP INSERT.
FS	FLOOR SINK	4"	-	-	J.R. SMITH #3100, 8" SQUARE, PORCELAIN ENAMELED CAST IRON INTERIOR WITH 3/4 CAST IRON PORCELAIN ENAMELED GRATE AND DOME BOTTOM STRAINERS. PROVIDE WITH J.R. SMITH TRAP INSERT.
MFD	MECHANICAL FLOOR DRAIN	4"	-	-	J.R. SMITH #2242 WITH SEDIMENT BUCKET. PROVIDE WITH J.R. SMITH TRAP INSERT.
P-1	WATER CLOSET - ADA COMPLIANT	4"	1"	-	FLOOR MOUNTED - KOHLER K-96057-SS-0 COMPLETE SLOAN ROYAL #111 FLUSH VALVE WITH YJ BRACKET AND CHURCH "DURA GUARD" MODEL # 2155 SSC SEAT.
P-2	WATER CLOSET	4"	1"	-	FLOOR MOUNTED - KOHLER K-96053-SS-0 COMPLETE SLOAN ROYAL #111 FLUSH VALVE WITH YJ BRACKET AND CHURCH "DURA GUARD" MODEL #2155 SSC SEAT.
P-3	URINAL - ADA COMPLIANT	3"	1"	-	WALL MOUNTED-KOHLER K-5016-ET COMPLETE, K-9183 STAINLESS STEEL STRAINER, J.R. SMITH #623 FIXTURE SUPPORT, AND SLOAN #186 FLUSH VALVE WITH YJ BRACKET. SET LIP 17" AFF.
P-4	URINAL	3"	1"	-	WALL MOUNTED-KOHLER K-5016-ET COMPLETE, K-9183 STAINLESS STEEL STRAINER, J.R. SMITH #623 FIXTURE SUPPORT, AND SLOAN #186 FLUSH VALVE WITH YJ BRACKET.
P-5	LAVATORY - ADA COMPLIANT	1 1/4"	1/2"	1/2"	WALL HUNG - KOHLER K-2032 (20" X 18") COMPLETE, SYMMONS S-20-0 FAUCET, K7715 OUTLET WITH TAILPIECE, J.R. SMITH #700-M31-Z FIXTURE SUPPORT, MCGUIRE #165 SUPPLIES WITH STOPS AND MCGUIRE #8872 P-TRAP. INSULATE P-TRAP, STOPS AND SUPPLIES WITH "PRO-WRAP" BY MCGUIRE. MOUNT WITH RIM MAXIMUM 34" AFF. PROVIDE LAWLER 570 THERMOSTATIC MIXING VALVE MOUNTED BELOW LAVATORY. RUN 100° F WATER TO FAUCET. MUST MEET A.D.A. GUIDELINES.
P-6	LAVATORY	1 1/4"	1/2"	1/2"	WALL HUNG - KOHLER K-2032 (20" X 18") COMPLETE, SYMMONS S-20-0 FAUCET, K7715 OUTLET WITH TAILPIECE, J.R. SMITH #700-M31-Z FIXTURE SUPPORT, MCGUIRE #165 SUPPLIES WITH STOPS AND MCGUIRE #8872 P-TRAP. INSULATE P-TRAP, STOPS AND SUPPLIES WITH "PRO-WRAP" BY MCGUIRE. MOUNT WITH RIM MAXIMUM 34" AFF. PROVIDE LAWLER 570 THERMOSTATIC MIXING VALVE MOUNTED BELOW LAVATORY. RUN 100° F WATER TO FAUCET.
P-7	UNDERMOUNT SINK	1 1/4"	1/2"	1/2"	ELKAY LRAD-2219 DRAIN OFFSET TO BACK, LK-35 STRAINER, SYMMONS DIA S-3510-PD-1.0 GPM FAUCET, MCGUIRE #1912 P-TRAP AND #165 STOPS WITH SUPPLIES.
P-8	MOP SINK	3"	1/2"	1/2"	STERN WILLIAMS #SBC-1700 (24" X 24") COMPLETE, T-35 HOSE WITH WALL HOOK, STAINLESS STEEL BACKSPLASH AND CHICAGO FAUCET #897 FAUCET.
P-9	COFFEE MAKER	-	1/2"	-	FURNISHED AND INSTALLED UNDER ANOTHER SECTION, ROUGH AND CONNECT COMPLETE, PROVIDE BALL VALVE STOP ON SUPPLY. PROVIDE WATTS SD-3 ON COLD WATER SUPPLY IF REQUIRED BY LOCAL CODES.
P-10	DRAIN BOX	1 1/2"	-	-	PROVIDE A SIOUX CHIEF MODEL #696-3F DRAIN BOX, #696-LC LOUVERED COVER, #696-CF SECONDARY DRAINAGE FUNNEL, AND J.R. SMITH TRAP SEAL INSERT. BOX TO COME COMPLETE WITH WALL FLANGE AND LOUVER. COORDINATE WITH MECHANICAL TO RECEIVE CONDENSATE WASTE. COORDINATE EXACT MOUNTING HEIGHT AND LOCATION WITH ARCHITECT.
P-11	SINK				

WATER HEATER SCHEDULE

MARK	FIXTURE	ELEC INFO.	GAS INPUT	REMARKS
CP-1	CIRCULATION PUMP	115V; 1/12 HP	-	ARMSTRONG COMPASS 1/12 HP, 115/1/60. ALL BRONZE. PROVIDE WITH HONEYWELL AQUASTAT AND TIMER.RATED FOR (100°F - 160°F).
ET-1	EXPANSION TANK	-	-	AMTROL THERM - X-TROL #ST-12 EXPANSION TANK, PRE-CHARGED, WELDED STEEL CONSTRUCTION. ISOLATION BETWEEN WATER AND AIR SHALL BE BY A BUTYL DIAPHRAM.
TWH-1	GAS TANKLESS WATER HEATER	120V CONTROL PANEL	199.9 CFH	NAVIEN NPE-240S-NG COMMERCIAL TANKLESS COMPLETE WITH COMMERCIAL SERVICE VALVE ON BOTH INLET AND OUTLET. UNIT SHALL PROVIDE 4.4 GPM AT 90°F RISE.SET OUTLET TEMPERATURE AT 140°F. WALL MOUNT WITH ADEQUATE CLEARANCE FOR PIPING AND SERVICING. INSTALL PER MANUFACTURER'S RECOMMENDATIONS.

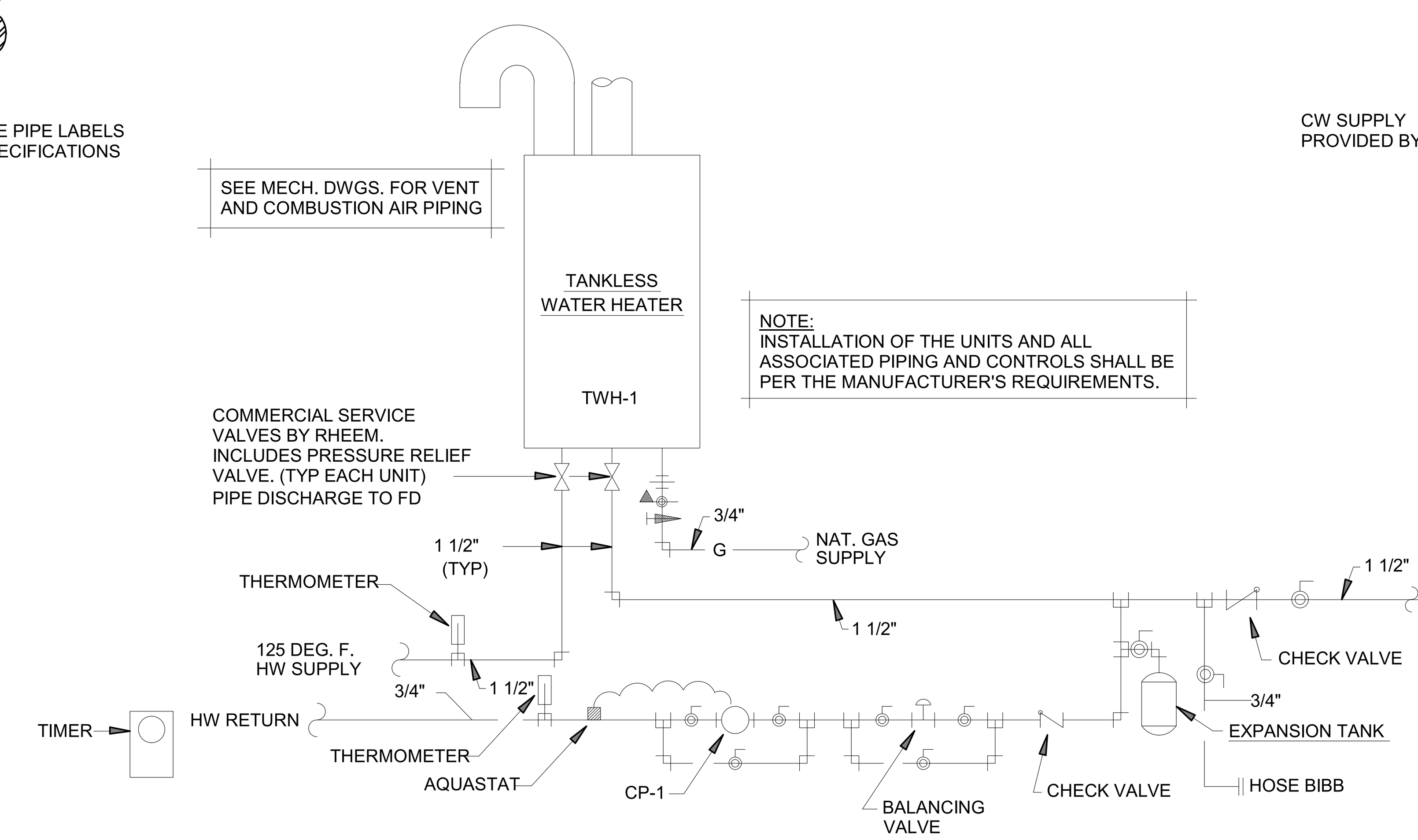

DETAIL of PIPING at TANKLESS WATER HEATERS

NO SCALE

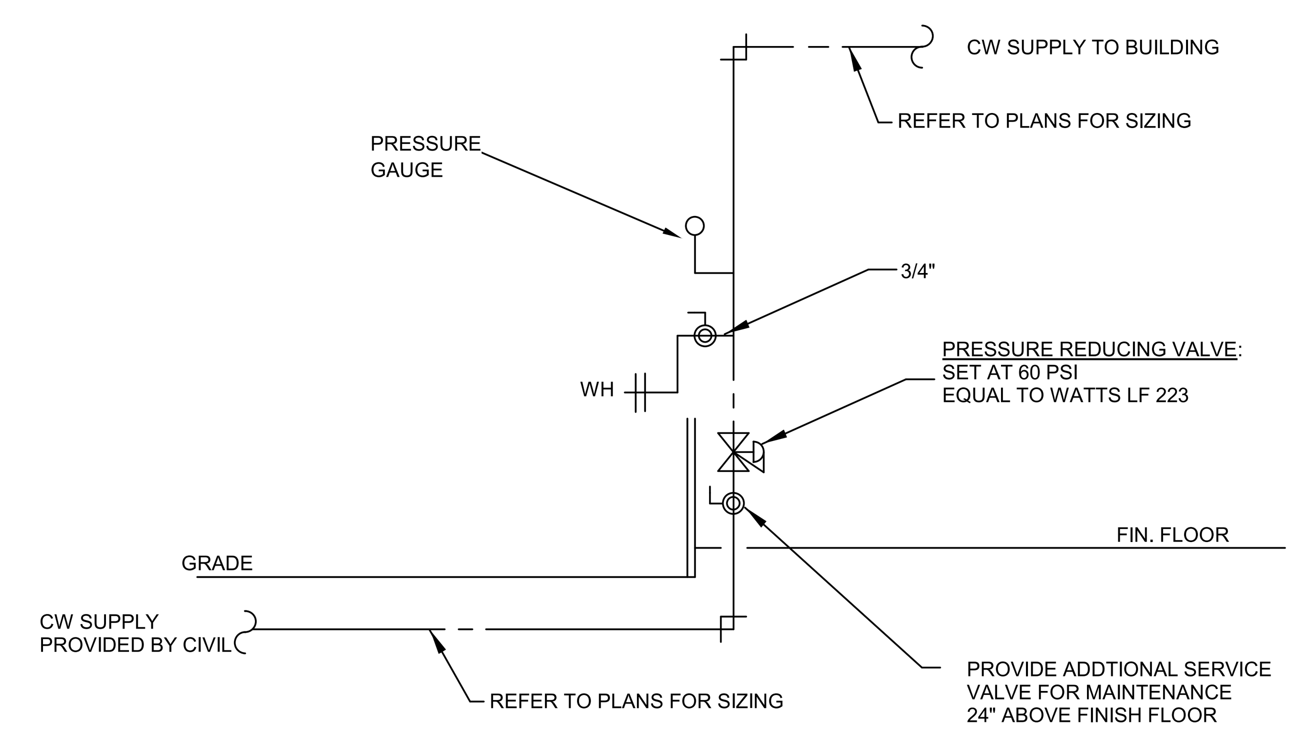

DETAIL OF WATER ENTRY

NO SCALE

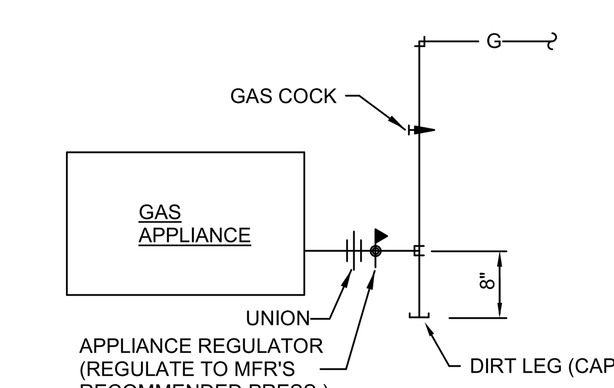

NOTE:
ALL EXPOSED EXTERIOR PIPING TO BE PAINTED WITH TWO (2) COATS OF PAINT IN COMPLIANCE WITH LOCAL PLUMBING CODE AND LOCAL AUTHORITY HAVING JURISDICTION. CONTRACTOR SHALL COORDINATE EXACT PAINT COLOR WITH ARCHITECT AND AUTHORITY HAVING JURISDICTION.

TYP. GAS CONNECTION

NO SCALE

Dewberry | EDMONDS
2 Riverchase Office Plaza
Suite 205
Hoover, AL 35244
(205) 988-2069
www.dewberry.com
Project Number : 50155636

STATE OF ALABAMA LICENSED PROFESSIONAL ENGINEER No. 24747 WADE STEWART 09-15-2022

THOMAS M. McELRATH, ARCHITECT
ARCHITECTURE and SPACE PLANNING
717 MERIT SPRINGS ROAD
GADSDEN, ALABAMA 35901
PHONE: (256) 490-8244
EMAIL: TOM@TMM-ARCHITECT.COM

A NEW SENIOR WELLNESS CENTER
2829 W. Meighan Boulevard
for the
City of Gadsden, Alabama

DRAWN	ALV
CHECKED	SMC
SCALE	AS NOTED
DATE	09/15/2022
FILE	
JOB NO.	22-01
REVISIONS	

SHEET P0.1 OF X NUMBER

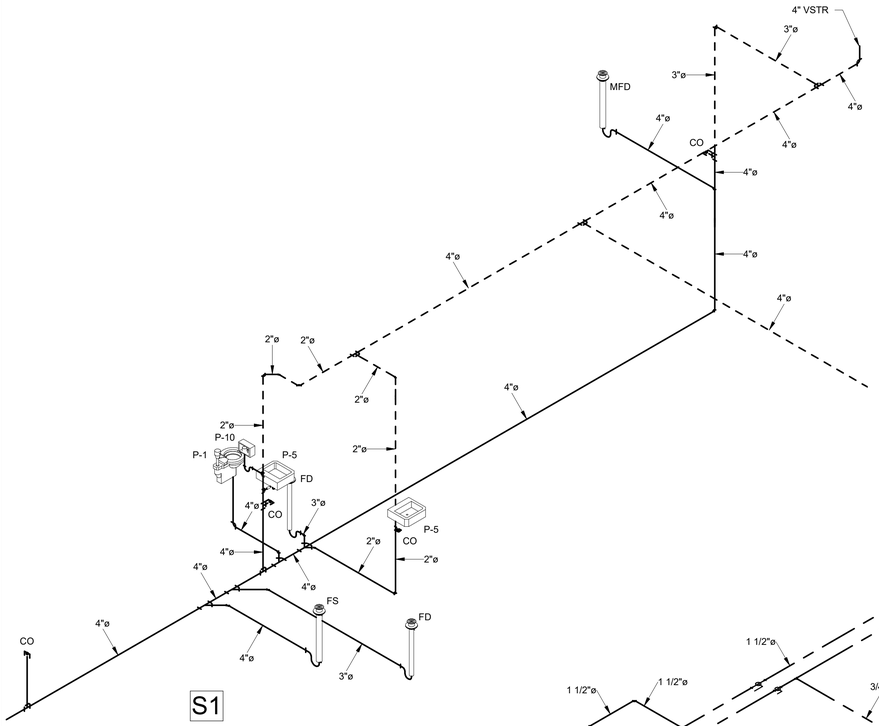

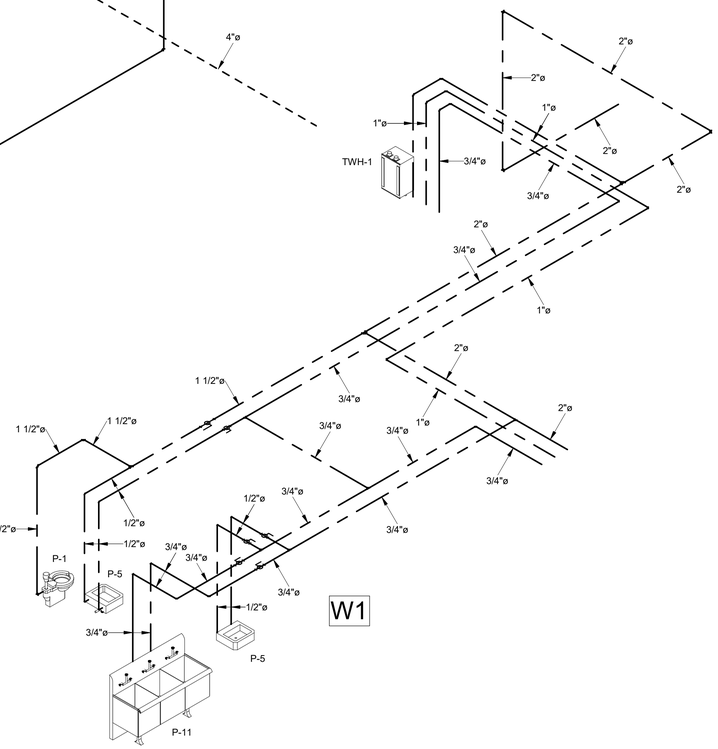

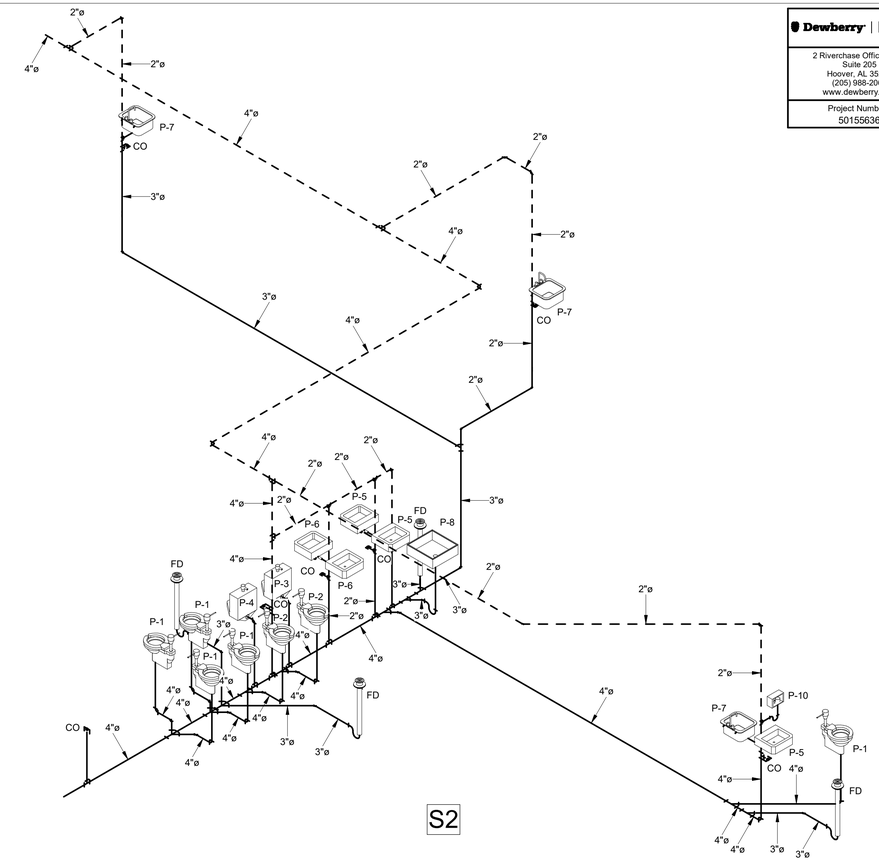

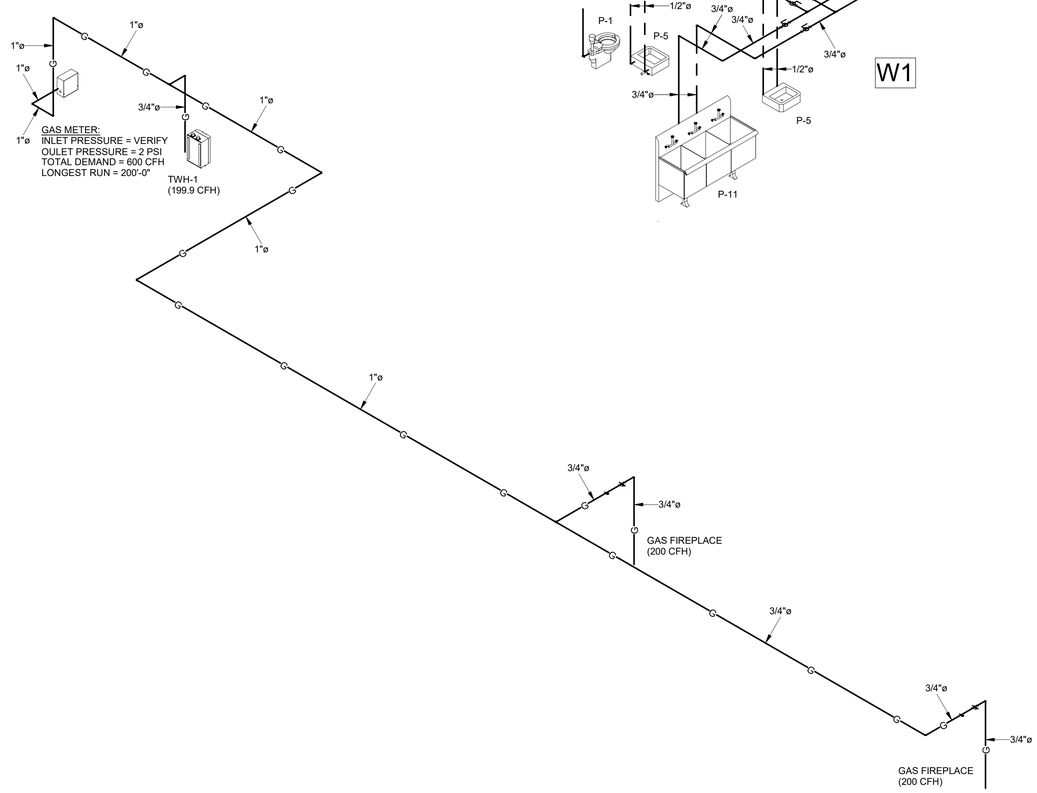

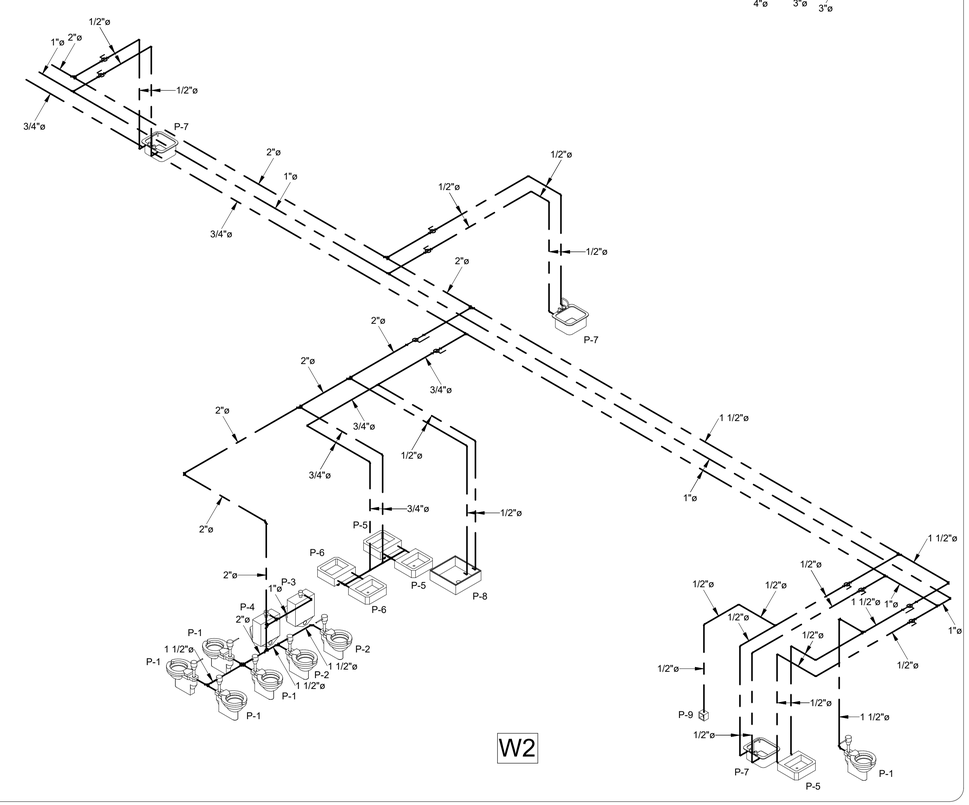

Dewberry | EDMONDS
2 Riverchase Office Plaza
Suite 205
Hoover, AL 35244
(205) 988-2069
www.dewberry.com

Project Number :
50155636

STATE OF ALABAMA
No. 24747
PROFESSIONAL
09-15-2022
ENGINEER
WADE STEWART

THOMAS M. McELRATH, ARCHITECT
ARCHITECTURE and SPACE PLANNING
717 MERIT SPRINGS ROAD
GADSDEN, ALABAMA 35901
PHONE: (256) 490-8244
EMAIL: TOM@TMM-ARCHITECT.COM

A NEW SENIOR WELLNESS CENTER
2829 W. Meighan Boulevard
for the
City of Gadsden, Alabama

DRAWN	ALV
CHECKED	SMC
SCALE	AS NOTED
DATE	09/15/2022
FILE	
JOB NO.	22-01
REVISIONS	

SHEET
P0.2
OF
X
NUMBER

Dewberry | EDMONDS
2 Riverchase Office Plaza
Suite 205
Hoover, AL 35244
(205) 988-2069
www.dewberry.com
Project Number :
50155636

STATE OF ALABAMA
No. 24747
PROFESSIONAL
09-15-2022
ENGINEER
WADE STEWART

THOMAS M. McELRATH, ARCHITECT
ARCHITECTURE and SPACE PLANNING
717 MERIT SPRINGS ROAD
GADSDEN, ALABAMA 35901
PHONE: (256) 490-8244
EMAIL: TOM@TMM-ARCHITECT.COM

A NEW SENIOR WELLNESS CENTER
2829 W. Meighan Boulevard
for the
City of Gadsden, Alabama

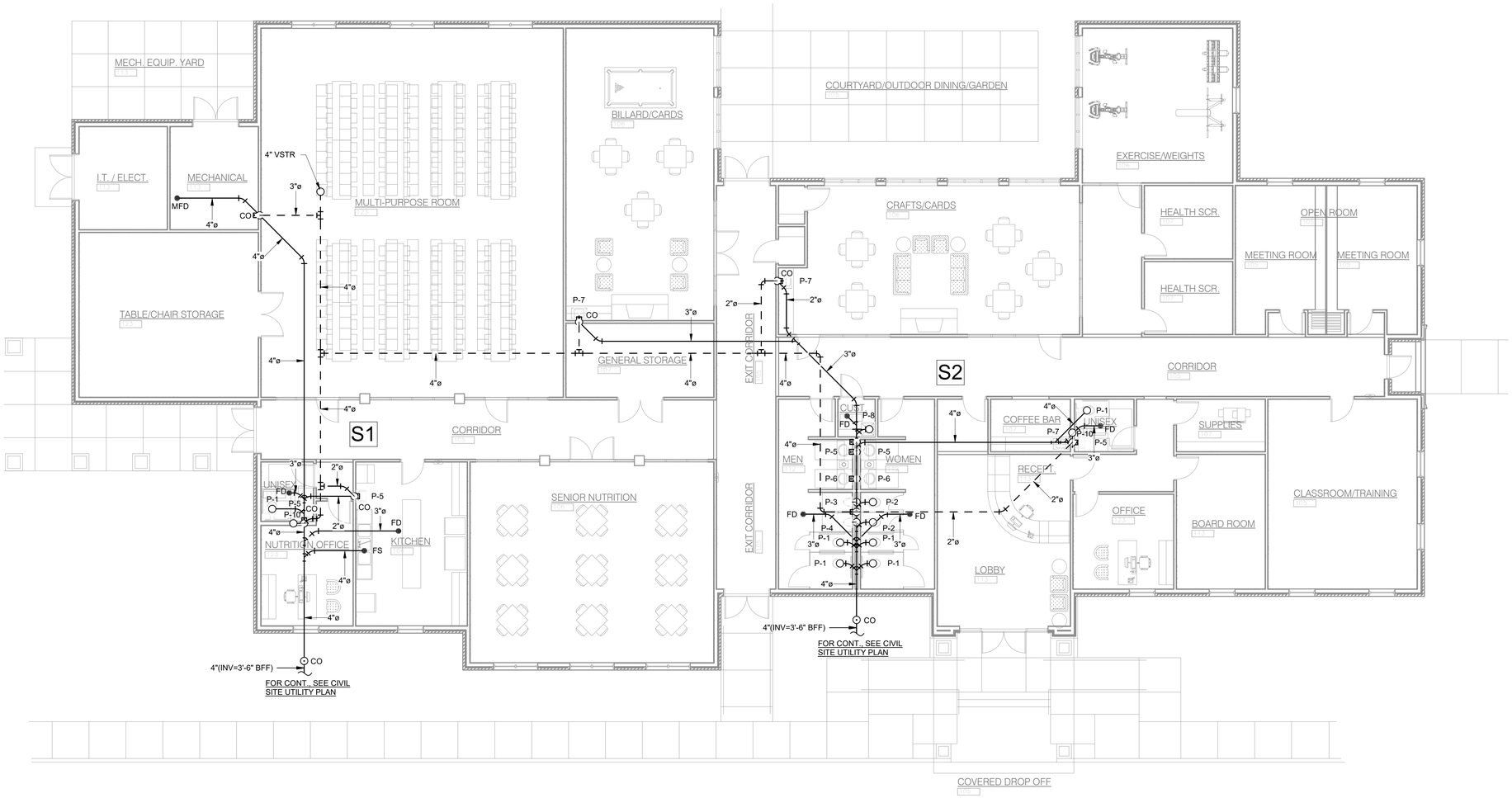

NON-PRESSURE - FLOOR PLAN

1/8" = 1'-0"

PLAN NORTH

DRAWN	ALV
CHECKED	SMC
SCALE	AS NOTED
DATE	09/15/2022
FILE	
JOB NO.	22-01
REVISIONS	

SHEET P1.1 OF XX NUMBER

Dewberry | EDMONDS
2 Riverchase Office Plaza
Suite 205
Hoover, AL 35244
(205) 988-2069
www.dewberry.com
Project Number :
50155636

STATE OF ALABAMA
No. 24747
PROFESSIONAL
09-15-2022
ENGINEER
WADE STEWART

THOMAS M. McELRATH, ARCHITECT
ARCHITECTURE and SPACE PLANNING
717 MERIT SPRINGS ROAD
GADSDEN, ALABAMA 35901
PHONE: (256) 490-8244
EMAIL: TOM@TMM-ARCHITECT.COM

A NEW SENIOR WELLNESS CENTER
2829 W. Meighan Boulevard
for the
City of Gadsden, Alabama

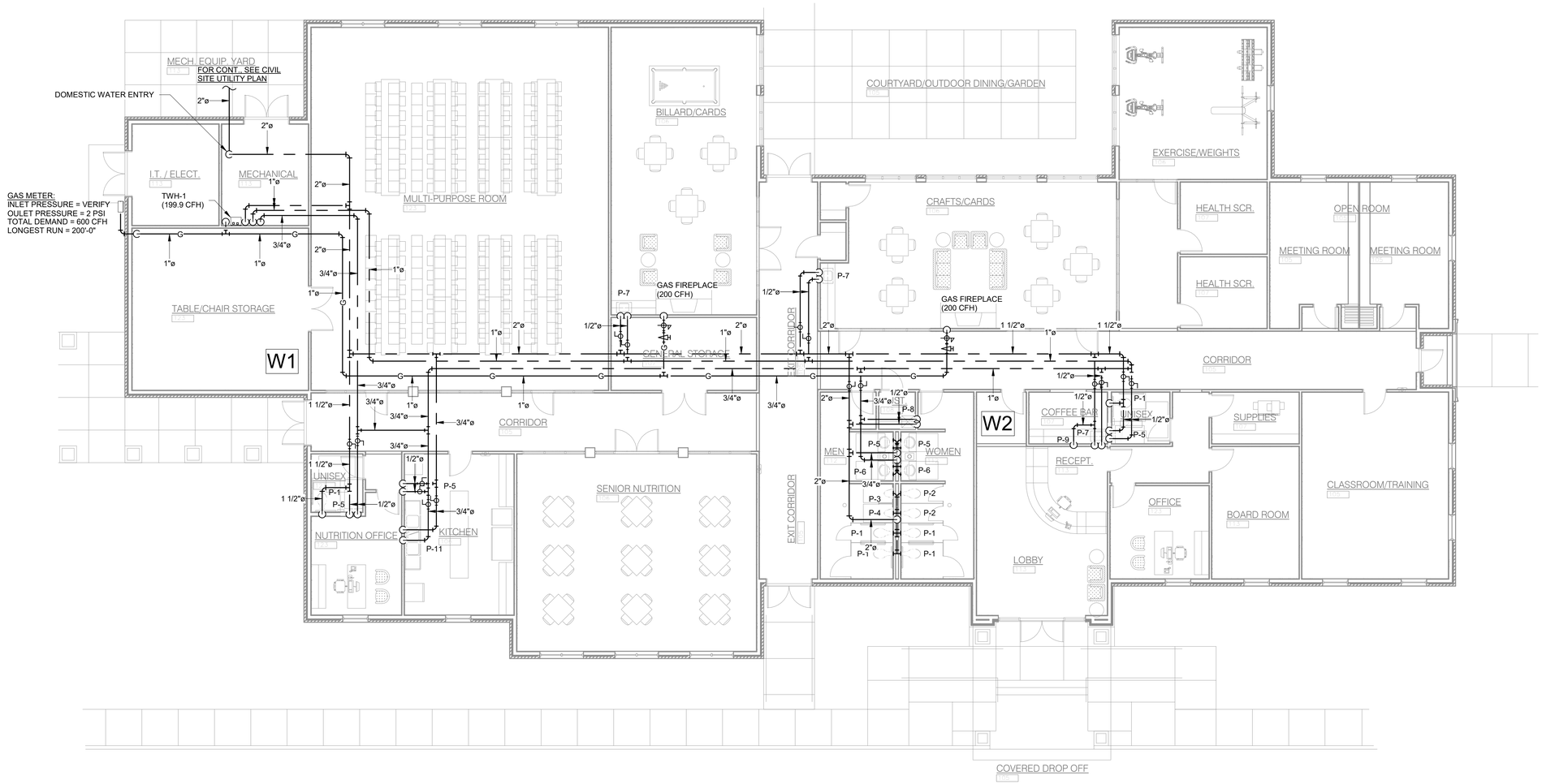

PRESSURE - FLOOR PLAN
1/8" = 1'-0"

PLAN NORTH

DRAWN	ALV
CHECKED	SMC
SCALE	AS NOTED
DATE	09/15/2022
FILE	
JOB NO.	22-01
REVISIONS	

SHEET
P2.2
OF
X
NUMBER

DUCTWORK LEGEND

(CFM) S	SUPPLY DIFFUSER
(CFM) R	RETURN GRILLE
(CFM) E	EXHAUST GRILLE
(CFM) T	TRANSFER AIR GRILLE
(CFM) SR	SIDEWALL REGISTER
ø	ROUND DUCT SYMBOL
W X H	RECTANGULAR DUCT (WIDTH X HEIGHT)
	EXISTING DUCTWORK, PIPING, OR EQUIPMENT TO REMAIN.
	EXISTING DUCTWORK, PIPING, OR EQUIPMENT TO BE REMOVED.
	RECTANGULAR SUPPLY DUCT TURNING UP
	RECTANGULAR SUPPLY AIR DUCT TURNING DOWN
	RECTANGULAR RETURN AIR OR EXHAUST DUCT TURNING UP
	RECTANGULAR RETURN AIR OR EXHAUST DUCT TURNING DOWN
	FLAT OVAL TURNING UP.
	FLAT OVAL TURNING DOWN.
	ROUND DUCT TURNING DOWN
	ROUND DUCT TURNING UP
	MAXIMUM 5' FLEXIBLE DUCT ALL BRANCH DUCTS
	RECTANGULAR 90° ELBOW WITH TURNING VANES FOR SUPPLY.
	RISE OR DROP IN DUCT
	RECTANGULAR BRANCH OFF OF RECTANGULAR DUCT WITH MANUAL DAMPER
	CONICAL SPIN-IN WITH MANUAL DAMPER
MD	MANUAL DAMPER
FD	FIRE DAMPER (PROVIDE ACCESS DOOR)
AD	AUTOMATIC DAMPER
SFD	COMBINATION SMOKE/FIRE DAMPER (PROVIDE ACCESS DOOR)
T	TEMPERATURE SENSOR
H	HUMIDITY SENSOR
C	CO2 MONITOR
	CONNECT TO EXISTING, FIELD VERIFY EXACT SIZE AND LOCATION.

HVAC ABBREVIATIONS

A	AMPS
AFF	ABOVE FINISH FLOOR
AHU	AIR HANDLING UNIT
AMB.	AMBIENT
ARCH.	ARCHITCTURAL
BHP	BRAKE HORSEPOWER
BOD	BOTTOM OF DUCT
BTUH	BRITISH THERMAL UNIT PER HOUR
CFM	CUBIC FEET PER MINUTE
DB	DRY BULB
DN.	DOWN
°F	DEGREES FAHERNHEIT
ΔP	CHANGE IN PRESSURE
ΔT	CHANGE IN TEMPERATURE
DIA.	DIAMETER
EA	EXHAUST AIR
ENT.	ENTERING
EAT	ENTERING AIR TEMPERATURE
EMG	EXPANDED METAL GRILLE
EWT	EXTERNAL WATER TEMPERATURE
E.S.P.	EXTERNAL STATIC PRESSURE
EX.	EXISTING
EXT.	EXTERNAL
FPM	FEET PER MINUTE
FT.	FEET
F.V.	FACE VELOCITY
GAL.	GALLONS
GPM	GALLONS PER MINUTE
H	HEIGHT
HP	HORSEPOWER
IN.	INCHES
I.D.	INSIDE DIAMETER
KW	1000 WATTS
L	LENGTH
LBS.	POUNDS
LRA	LOCKED ROTOR AMPS
LVG.	LEAVING
LAT	LEAVING AIR TEMPERATURE
LWT	LEAVING WATER TEMPERATURE
MAX.	MAXIMUM
MAT	MIXED AIR TEMPERATURE
MBH	1000 BTUH
MCA	MINIMUM CIRCUIT AMPACITY
MIN.	MINIMUM
MOCP	MAXIMUM OVER CURRENT PROTECTION
NO	NORMALLY OPEN
NC	NORMALLY CLOSED
NPLV	NON-STAND PART LOAD VALUE
OSA	OUTSIDE AIR
O.D.	OUTSIDE DIAMETER
PSI	POUNDS PER SQUARE INCH
PSIA	PSI ATMOSPHERIC
PSIG	PSI GAUGE
RA	RETURN AIR
RAT	RETURN AIR TEMPERATURE
RH	RELATIVE HUMIDITY
RLA	RATED LOAD AMPS
RPM	REVOLUTIONS PER MINUTE
SA	SUPPLY AIR
SAT	SUPPLY AIR TEMPERATURE
T.S.P.	TOTAL STATIC PRESSURE
TD	TRANSFER DUCT
TOD	TOP OF DUCT
U.N.O.	UNLESS NOTED OTHERWISE
V	VOLUME
V/Ø/Hz	VOLTS/PHASE/HERTZ
W.G.	WATER GAGE
W	WIDTH
WB	WET BULB

HVAC CONTROLS LEGEND

T	TEMPERATURE SENSOR
H	HUMIDITY SENSOR
C	CO2 MONITOR
CP	120V HVAC CONTROLS POWER
TS	AVERAGING TEMPERATURE SENSOR
H	DUCT MOUNTED HUMIDITY SENSOR
AO	ANALOG OUTPUT
AI	ANALOG INPUT
DO	DIGITAL OUTPUT
DI	DIGITAL INPUT
SD	DUCT MOUNTED SMOKE DETECTOR. SMOKE DETECTOR FURNISHED AND WIRED BY ELECTRICAL CONTRACTOR, INSTALLED IN DUCT BY MECHANICAL CONTRACTOR.
HOA	HAND-OFF-AUTO MAGNETIC STARTER
SP	DUCT STATIC PRESSURE SENSOR
DP	DIFFERENTIAL PRESSURE SENSOR
	INTERLOCK WITH FIRE ALARM SYSTEM
M	FAN/PUMP MOTOR
VFD	VARIABLE FREQUENCY DRIVE
CT	CURRENT TRANSDUCER
FS	FLOW SWITCH
	DIRECTION OF FLOW
TS	PIPE MOUNTED TEMPERATURE SENSOR
	2-WAY AUTOMATIC VALVE
	3-WAY AUTOMATIC VALVE
H-O-A	HAND-OFF-AUTO SWITCH
AFM	AIR FLOW MONITOR. (PROVIDE ACCESS DOOR AT EACH AIR FLOW MONITOR.)

PIPING LEGEND

CHS	CHILLED WATER SUPPLY PIPING
CHR	CHILLED WATER RETURN PIPING
HWS	HOT WATER SUPPLY PIPING
HWR	HOT WATER RETURN PIPING
D	DRAIN PIPING
AAV OR	AAV-AUTO. AIR VENT (MARKED OR SHOWN)
	GATE VALVE
	GLOBE VALVE
	BALL VALVE
	TWO-WAY AUTO CONTROL VALVE.
	THREE-WAY AUTO CONTROL VALVE.
	BUTTERFLY VALVE.
	BUTTERFLY VALVE.
	PRESSURE REDUCING VALVE.
	PIPE TURNING UP.
	PIPE TURNING DOWN.
	BRANCH OFF TOP OF MAIN.
	BRANCH OFF BOTTOM OF MAIN.
	BRANCH OFF SIDE OF MAIN.
	CALIBRATED BALACING VALVE
	ECCENTRIC REDUCER
	STRAINER (Y)
	FLEXIBLE CONNECTION IN PIPING
	UNION
	PETES PLUG
	SLOPE DOWN IN DIRECTION OF ARROW
	CHECK VALVE
	ASME PRESSURE RELIEF VALVE.

AIR DEVICE LEGEND

MARK	EXAMPLE	DESCRIPTION	SIZE	BASIS OF DESIGN
"S"	200S / CFM	PLAQUE FACE CEILING DIFFUSER WITH ROUND NECK. ALL CEILING DIFFUSERS TO HAVE A 24X24 CEILING PANEL (EXCEPT WHERE SHOWN AS 12X12). ALL CEILING DIFFUSERS TO HAVE ROUND NECKS.	CFM SHOWN ON PLANS. NECK & RUN-OUT SIZED PER THE FOLLOWING: CFM / NECK SIZE / RUN-OUT SIZE 0 - 100 / 6" / 6" 101 - 200 / 8" / 8" 201 - 300 / 10" / 10" 301 - 500 / 12" / 12" 501 - 750 / 15" / 15" 751 - 1000 / 18" / 18"	TITUS OMNI
"LD"	200LD / CFM	LOUVER FACE CEILING DIFFUSER WITH SQUARE NECK. ALL CEILING DIFFUSERS TO HAVE A 24X24 CEILING PANEL (EXCEPT WHERE SHOWN AS 12X12). ALL CEILING DIFFUSERS TO HAVE SQUARE NECKS.	CFM SHOWN ON PLANS. NECK & RUN-OUT SIZED PER THE FOLLOWING: CFM / NECK SIZE / RUN-OUT SIZE 0 - 100 / 6"x6" / 6" 101 - 200 / 9"x9" / 8" 201 - 300 / 12"x12" / 10" 301 - 500 / 15"x15" / 12" 501 - 750 / 18"x18" / 15" 751 - 1000 / 21"x21" / 18"	TITUS TDCA-AA
"R", "E", "T"	200R / CFM R24 / SQUARE NECK SIZE	CEILING MOUNTED RETURN (R), EXHAUST (E), OR TRANSFER (T) EGGCRATE GRILLE. ALL GRILLES IN A LAY-IN CEILING TO HAVE A 24X24 CEILING PANEL.	CFM SHOWN ON PLANS. NECK SIZED PER THE FOLLOWING: CFM / NECK SIZE 0 - 100 / 6x6 101 - 200 / 8x8 201 - 350 / 10x10 351 - 500 / 12x12 501 - 750 / 14x14 751 - 950 / 16x16 951 - 1200 / 18x18 1201 - 1500 / 20x20 1501 - 2000 / 24x24	TITUS 50F
SR	SR12X6 / 200 / CFM / W x H	SIDEWALL SUPPLY REGISTER.	SIZE (WxH) IN INCHES & CFM SHOWN.	TITUS 272FL
WRG / WTG	WRG12X6 / 200 / CFM / W x H	WALL RETURN GRILLE / WALL TRANSFER GRILLE.	SIZE (WxH) IN INCHES & CFM SHOWN.	TITUS 350FL

NOTES:

1. SEE SPECIFICATIONS FOR FINISH AND CONSTRUCTION MATERIAL FOR EACH AIR DEVICE.
2. COORDINATE WITH ARCHITECT'S CEILING PLAN FOR LAY-IN OR SURFACE MOUNTING OF CEILING MOUNTED AIR DEVICES.
3. COORDINATE LOCATIONS OF CEILING MOUNTED AIR DEVICES WITH LIGHT FIXTURES, SPRINKLER HEADS, AND OTHER CEILING MOUNTED DEVICES. DO NOT SCALE MECHANICAL DRAWINGS FOR LOCATIONS.

OUTDOOR HEAT PUMP (DUCTLESS SPLIT SYSTEM) SCHEDULE

TYPE:

1. OUTDOOR HEAT PUMP

NOTES:

1. AIRFLOW RATED AT HIGH FAN SPEED.
2. POWER FOR INDOOR UNIT IS FED FROM OUTDOOR UNIT.
3. COOLING CAPACITY RATED AT 95°F.
4. HEATING CAPACITY RATED AT 47°F.
5. REFRIGERANT CIRCUIT ACCESS PORTS LOCATED OUTDOORS SHALL BE FITTED WITH LOCKING TYPE TAMPER RESISTANT CAPS.

MARK	TYPE	COOLING CAPACITY	HEATING CAPACITY	ELECTRICAL					EFFICIENCY		BASIS OF DESIGN
				V	PH	HZ	MCA	MOCP	SEER	HSPF	
OHP-123	1	18 MBH	19 MBH	208 V	1	60	11 A	28 A	24.6	11.0	MITSUBISHI
OHP-124	1	18 MBH	19 MBH	208 V	1	60	11 A	28 A	19.9	10.2	MITSUBISHI
OHP-ELEC	1	24 MBH	26 MBH	208 V	1	60	17 A	27 A	19.5	10.6	MITSUBISHI
OHP-MECH	1	18 MBH	19 MBH	208 V	1	60	11 A	28 A	19.8	11.2	MITSUBISHI

INDOOR HEAT PUMP (DUCTLESS SPLIT SYSTEM) SCHEDULE

TYPE:

1. INDOOR, WALL MOUNT
2. INDOOR, HORIZTONAL DUCTED
3. INDOOR, CEILING CASSETTE

NOTES:

1. AIRFLOW RATED AT HIGH FAN SPEED.
2. POWER FOR INDOOR UNIT IS FED FROM OUTDOOR UNIT.
3. COOLING CAPACITY RATED AT 95°F.
4. HEATING CAPACITY RATED AT 47°F.

ACCESSORIES:

1. 3-POLE DISCONNECT SWITCH.
2. HARD WIRED UNIT CONTROLLER.
3. FULL PORT BALL VALVES & SCHRADER VALVES WITH FLARED CONNECTIONS.
4. CONDENSATE PUMP (120/1/60) - 1 GPH @ 33 FT. HD.

MARK	TYPE	OSA	AIRFLOW	COOLING CAPACITY	HEATING CAPACITY	DIMENSIONS (WxLxH)	ELECTRICAL				ACCESSORIES	BASIS OF DESIGN
							V	PH	HZ	MCA		
IHP-123	3	0	480	18 MBH	19 MBH	33" x 37" x 10"	208 V	1	60	1 A	1,2,3,4	MITSUBISHI
IHP-124	2	90	600	18 MBH	19 MBH	46" x 29" x 10"	208 V	1	60	1.69 A	1,2,3,4	MITSUBISHI
IHP-ELEC	1	0	700	24 MBH	26 MBH	46" x 12" x 14"	208 V	1	60	1 A	1,2,3,4	MITSUBISHI
IHP-MECH	1	0	425	18 MBH	19 MBH	36" x 10" x 12"	208 V	1	60	1 A	1,2,3,4	MITSUBISHI

AIR PURIFICATION SCHEDULE

GPS MODEL	QUANTITY*	VOLTAGE	WATTS	MOUNTING LOCATION	MIN ION DENSITY(IONS/CC)	NOTES
GPS-FC	1 PER MINI INDOOR UNIT OR INDOOR SPLIT UNIT	208	5	TWHP	20 MILLION	1 TO 6

NOTES:

1. BASIS OF DESIGN: PHENOMENAL AIRE: APPROVED EQUALS BY GLOBAL PLASMA SOLUTIONS, ACTIVE AIR, AIRGENICS AND BIOXGEN SUBJECT TO SPECIFICATION COMPLIANCE.
2. MOUNT BI-POLAR ION GENERATOR WHERE INDICATED ON SCHEDULE.
3. IF CONTRACTOR SUBSTITUTES BASIS OF DESIGN WITH ANOTHER MANUFACTURER, CONTRACTOR SHALL COORDINATE ALL ELECTRICAL AND MECHANICAL CHANGES.
4. BI-POLAR IONIZATION SYSTEMS REQUIRING PERISHABLE GLASS TUBES ARE NOT ACCEPTABLE.
5. ALL MANUFACTURER'S MUST PASS UL-867-2007 OZONE CHAMBER TESTING BY EITHER US OR ETL.
6. PROVIDE GPS-FC-2 FOR CEILING CASSETTES AND HORIZONTAL ABOVE CEILING UNITS AND GPS-FC-48 FOR VERTICAL UNITS OR EQUAL.

✳ PROVIDE FOR ALL INDOOR SPLITS AND MINI SPLITS.

FAN SCHEDULE

FAN TYPE:

1. CEILING MOUNTED EXHAUST FAN
2. IN-LINE EXHAUST FAN
3. ATTIC VENTILATION FAN

FAN ACCESSORIES:

1. BACKDRAFT DAMPER.
2. DISCONNECT SWITCH.
3. ALUMINUM CEILING GRILLE.
4. 5A-120V FAN SPEED CONTROLLER.
5. INTERLOCK WITH LIGHT SWITCH.
6. MOTOR SIDE GUARD
7. WALL LOUVER AND AUTO DAMPER.
8. INTERLOCK WITH THERMOSTAT.

MARK	FAN TYPE	QUANTITY	AIRFLOW (CFM)	E.S.P. (in-wg)	WHEEL SIZE	RPM	MOTOR (HP / W)	ELECTRICAL			ACCESSORIES	BASIS OF DESIGN	
								V	PH	HZ		MANUFACTURER	MODEL
EF-1	1	1	70	0.33	N/A	900	34.4 W	120 V	1	60	1,2,3,4,5	Loren Cook Company	GC
EF-1A	3	6	1200	0.38	N/A	1100	1/4 HP	120 V	1	60	1,2,6,7,8	BROAN	BROAN 355
EF-2	2	1	610	0.50	12"	1677	1/4 HP	120 V	1	60	1,2,3,4,5	Loren Cook Company	100SQN
EF-3	1	1	70	0.33	N/A	900	34.4 W	120 V	1	60	1,2,3,4,5	Loren Cook Company	GC

Dewberry | EDMONDS
2 Riverchase Office Plaza
Suite 205
Hoover, AL 35244
(205) 988-2069
www.dewberry.com
Project Number : 50155636

STATE OF ALABAMA
No. 24747
PROFESSIONAL
09-15-2022
ENGINEER
WADE STEWART

THOMAS M. McELRATH, ARCHITECT
ARCHITECTURE and SPACE PLANNING
717 MERIT SPRINGS ROAD
GADSDEN, ALABAMA 35901
PHONE: (256) 490-8244
EMAIL: TOM@TMM-ARCHITECT.COM

A NEW SENIOR WELLNESS CENTER
2829 W. Meighan Boulevard
for the
City of Gadsden, Alabama

DRAWN	RBG
CHECKED	JWS
SCALE	AS NOTED
DATE	09/15/2022
FILE	
JOB NO.	22-01
REVISIONS	

SHEET M0.1 OF X NUMBER

Dewberry | EDMONDS
2 Riverchase Office Plaza
Suite 205
Hoover, AL 35244
(205) 988-2069
www.dewberry.com
Project Number :
50155636

STATE OF ALABAMA
No. 24747
PROFESSIONAL
09-15-2022
ENGINEER
WADE STEWART

THOMAS M. McELRATH, ARCHITECT
ARCHITECTURE and SPACE PLANNING
717 MERIT SPRINGS ROAD
GADSDEN, ALABAMA 35901
PHONE: (256) 490-8244
EMAIL: TOM@TMM-ARCHITECT.COM

OUTDOOR HEAT PUMP UNIT SCHEDULE

TYPE: AIR COOLED OUTDOOR HEAT PUMP.

NOTES:

1. CAPACITY TO BALANCE RESPECTIVE INDOOR AC UNIT.
2. CAPACITY BASED ON 95 degF AMBIENT.
3. UL LISTED, AHRI CERTIFIED, ASHRAE 90.1-2007 COMPLIANT.
4. REFRIGERANT CIRCUIT ACCESS PORTS LOCATED OUTDOORS SHALL BE FITTED WITH LOCKING-TYPE TAMPER-RESISTANT CAPS. ANY ACCESS DEVICE REQUIRED SHALL BE LEFT ON SITE WITH THE OWNER AT PROJECT CLOSE OUT.

ACCESSORIES:

1. PHASE PROTECTION.
2. MICROPROCESSOR CONTROLS.
3. ISOLATION VALVES.
4. LIQUID LINE REFRIGERANT FILTER DRIER.
5. ANTI SHORT CYCLE TIMER.
6. LOW AMBIENT CONTROL DOWN TO 0 degF.
7. HAIL / VANDAL GUARDS.
8. THERMAL EXPANSION VALVE.

MARK	NOMINAL CAPACITY	ELECTRICAL					BASIS OF DESIGN
		Voltage	PH	HZ	MCA	MOCP	
CU-1	10	208 V	3	60 Hz	41 A	50 A	Trane
CU-2	5	208 V	3	60 Hz	21 A	35 A	Trane
CU-3	5	208 V	3	60 Hz	21 A	35 A	Trane
CU-4	3.5	208 V	3	60 Hz	18 A	30 A	Trane
CU-5	3.5	208 V	3	60 Hz	18 A	30 A	Trane
CU-6	2.5	208 V	1	60 Hz	17 A	25 A	Trane

INDOOR AIR HANDLING UNIT SCHEDULE - COMBINED HEAT PUMP

AIR HANDLER UNIT TYPE:

1. SPLIT SYSTEM HEAT PUMP. HORIZONTAL INDOOR AIR HANDLER WITH DX COIL, ELECTRIC HEAT, SUPPLY FAN, & MATCHING OUTDOOR UNIT.
2.. SPLIT SYSTEM HEAT PUMP. VERTICAL INDOOR AIR HANDLER WITH DX COIL, ELECTRIC HEAT, SUPPLY FAN, & MATCHING OUTDOOR UNIT.

NOTES:

1. COOLING CAPACITY IS NET CAPACITY @ 95°F AMBIENT.
2. UL LISTED. AHRI CERTIFIED.
3. SEE PLANS FOR AIRFLOW CONFIGURATION.

ACCESSORIES:

1. SINGLE POINT POWER CONNECTION.
2. FILTER RACK WITH 2" THICK - 30% EFF. FILTERS.
3. INTERNALLY ISOLATED SUPPLY FAN - UNITS ≤ 5T, DIRECT DRIVE; UNITS > 5T, BELT DRIVE.
4. DX COOLING COIL - MATCHED TO OUTDOOR HEAT PUMP.
5. ELECTRIC HEAT.
6. 3-POLE DISCONNECT SWITCH.
7. HARD WIRED UNIT CONTROLLER
8. FULL PORT BALL VALVES & SCHRADER VALVES WITH FLARED CONNECTIONS.

MARK	TYPE	SUPPLY FAN			MAX OUTSIDE AIR	DX COOLING COIL CAPACITY				DX HEATING CAPACITY			ELEC HEAT		ELECTRICAL					ACCESSORIES	BASIS OF DESIGN
		AIRFLOW	E.S.P.	MOTOR		TOTAL	SENSIBLE	EAT (DB/WB)	NOMINAL TONS	TOTAL	EAT (DB)	AMBIENT (DB)	KW	STAGES	VOLTAGE	PH	HZ	MCA	MOCP		
AC-1	2	4,000	1.0	3.0	640 CFM	120 MBH	92.93 MBH	78.3°F / 65°F	10	77.87 MBH	61.6°F	17°F	34.91	2	208	3	60	103 A	110 A	1,2,3,4,5,6,7,8	Trane
AC-2	1	1,800	1.0	0.75	195 CFM	60 MBH	41.9 MBH	77.2°F / 64.2°F	5	53.5 MBH	64.3°F	17°F	10.8	1	208	3	60	45 A	45 A	1,2,3,4,5,6,7,8	Trane
AC-3	1	1,800	1.0	0.75	230 CFM	60 MBH	41.9 MBH	77.6°F / 64.5°F	5	53.5 MBH	63.3°F	17°F	10.8	1	208	3	60	45 A	45 A	1,2,3,4,5,6,7,8	Trane
AC-4	1	1,400	0.75	0.75	20 CFM	41 MBH	32.4 MBH	77.3°F / 64.3°F	3.5	38.5 MBH	64°F	17°F	10.8	1	208	3	60	45 A	45 A	1,2,3,4,5,6,7,8	Trane
AC-5	1	1,400	0.75	0.75	160 CFM	41 MBH	32.4 MBH	77.3°F / 64.3°F	3.5	38.5 MBH	64°F	17°F	10.8	1	208	3	60	45 A	45 A	1,2,3,4,5,6,7,8	Trane
AC-6	1	1,000	0.75	0.33	35 CFM	30 MBH	22.2 MBH	75.7°F / 63.1°F	2.5	27.8 MBH	68.2°F	17°F	7.2	1	208	1	60	47 A	50 A	1,2,3,4,5,6,7,8	Trane

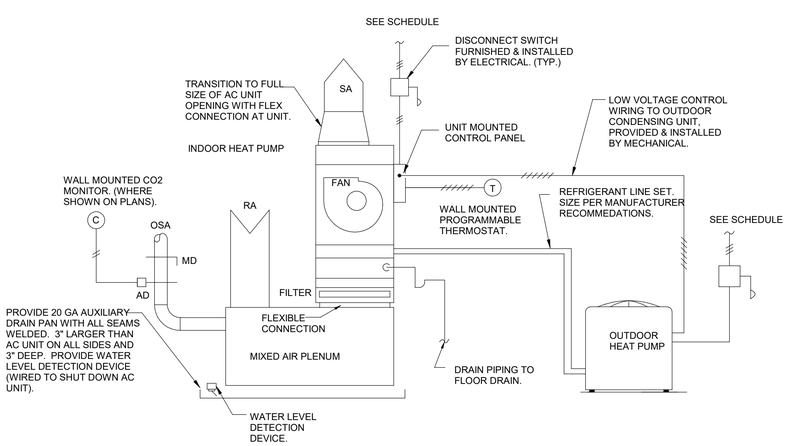

SPLIT SYSTEM CONTROL SEQUENCE

EACH AC UNIT SHALL BE STARTED AND STOPPED BY WALL MOUNTED PROGRAMMABLE THERMOSTAT, SUBJECT TO FACTORY SAFETIES AND THE DUCT MOUNTED SMOKE DETECTOR (WHERE INDICATED ON PLANS OR SCHEDULE).

WHEN AC UNIT AND CORRESPONDING CONDENSING UNIT IS ENERGIZED, THE AC UNIT SUPPLY FAN SHALL START.

DURING OCCUPIED HOURS, THE THERMOSTAT SHALL ENERGIZE THE OUTDOOR HEAT PUMP CONTROLS UPON A RISE IN ROOM TEMPERATURE PROVIDE COOLING BY LOADING AND UNLOADING COMPRESSORS IN STAGES AS NEEDED TO SATISFY SPACE TEMPERATURE SETPOINT (74°F - ADJUSTABLE) DURING SUMMER MONTHS. UPON A DROP IN SPACE TEMPERATURE DURING WINTER MONTHS, THE OUTDOOR HEAT PUMP SHALL STAGE ON TO MAINTAIN SPACE TEMPERATURE SETPOINT (70°F - ADJUSTABLE). IF THE HEAT PUMP CANNOT SATISFY SPACE TEMP, THE ELECTRIC HEAT SHALL STAGE ON. OCCUPIED HOURS TO BE DETERMINED BY THE OWNER. RECOMMENDED OCCUPIED HOURS ARE MONDAY THRU FRIDAY, 7 A.M. TO 6 P.M.

PROVIDE NIGHTTIME SETBACK TEMPERATURE THRU PROGRAMMABLE THERMOSTAT TO MAINTAIN 78°F (SUMMER), 66°F (WINTER), AFTER HOURS. UPON ACTIVATION OF NIGHT LOW LIMIT THERMOSTAT UNIT SHALL OPERATE IN OCCUPIED MODE UNTIL SATISFIED.

FOR AC UNITS WITH WALL MOUNTED CO2 MONITOR, OSA AUTO DAMPER TO OPEN WHEN CO2 RISES ABOVE 1000 PPM.

FOR AC UNITS WITHOUT WALL MOUNTED CO2 MONITOR, OSA AUTO DAMPER TO OPEN TO SCHEDULED POSITION DURING OCCUPIED PERIODS. DAMPER SHALL REMAINED CLOSED DURING UNOCCUPIED PERIODS.

SPLIT SYSTEM CONTROLS (NO BUILDING AUTOMATION SYSTEM)

NO SCALE

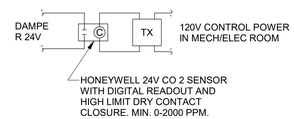

CONTROL SEQUENCE:

WHEN THE SPACE CO2 LEVEL RISES ABOVE 1000 PPM AS MEASURED BY THE WALL MOUNTED CO2 SENSOR, THE OSA DAMPER SHALL OPEN TO PROVIDE THE SCHEDULED OUTSIDE AIR TO THE SPACE. WHEN THE SPACE CO2 LEVEL FALLS BELOW 900 PPM, THE OSA DAMPER SHALL CLOSE.

OSA AD CONTROLS

NO SCALE

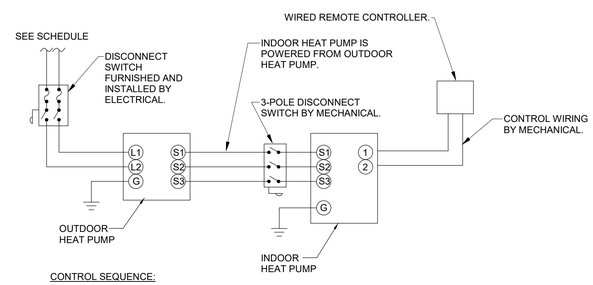

CONTROL SEQUENCE:

THE AC UNIT SHALL BE CONTROLLED BY A WIRED WALL MOUNTED REMOTE CONTROLLER. THE CONTROLLER SHALL CYCLE ON COMPRESSOR(S) TO MAINTAIN COOLING SETPOINT (74°F - ADJUSTABLE) AND HEATING SETPOINT (70°F - ADJUSTABLE). ALL MINI-SPLIT AC UNITS THAT SERVE ELECTRICAL AND IT ROOMS SHALL NOT SET THEIR TEMPERATURE BACK AT NIGHT. FOR ALL MINI-SPLIT AC UNITS THAT SERVE OFFICES, CLASSROOMS, ETC. SHALL SET THEIR TEMPERATURE BACK TO 4°F ABOVE SETPOINT IN SUMMER AND 4°F BELOW SETPOINT IN THE WINTER. COORDINATE WITH OWNER TO ESTABLISH OCCUPIED / UNOCCUPIED SCHEDULES.

DUCTLESS SPLIT SYSTEM CONTROLS

NO SCALE

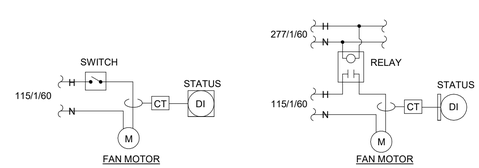

EXHAUST FAN CONTROLLED BY SWITCH. EXHAUST FAN CONTROLLED BY LIGHTING CIRCUIT.

THE BAS SHALL MONITOR FAN STATUS VIA A CURRENT TRANSDUCER.

EXHAUST FAN CONTROLS

NO SCALE

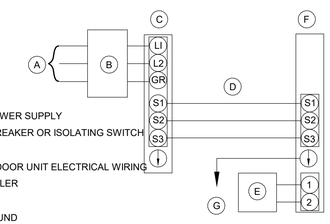

(A) OUTDOOR UNIT POWER SUPPLY
(B) WIRING CIRCUIT BREAKER OR ISOLATING SWITCH
(C) OUTDOOR UNIT
(D) INDOOR UNIT/OUTDOOR UNIT ELECTRICAL WIRING
(E) REMOTE CONTROLLER
(F) INDOOR UNIT
(G) INDOOR UNIT GROUND

WIRING DETAIL FOR DUCTLESS MINI-SPLIT

NO SCALE

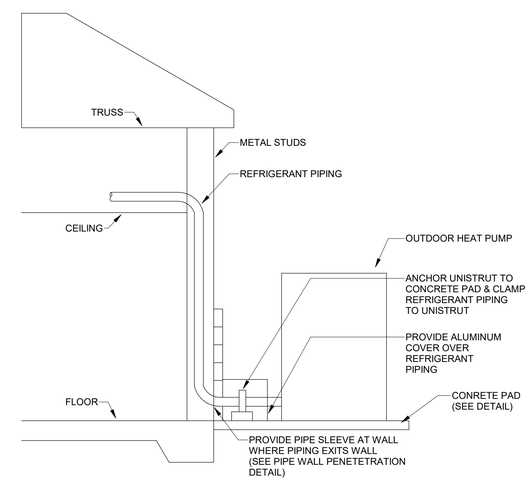

CONDENSING UNIT INSTALLATION DETAIL

NO SCALE

A NEW SENIOR WELLNESS CENTER
2829 W. Meighan Boulevard
for the
City of Gadsden, Alabama

DRAWN	RBG
CHECKED	JWS
SCALE	AS NOTED
DATE	09/15/2022
FILE	
JOB NO.	22-01
REVISIONS	

SHEET
M0.2
OF
NUMBER

Dewberry | EDMONDS
2 Riverchase Office Plaza
Suite 205
Hoover, AL 35244
(205) 988-2069
www.dewberry.com
Project Number :
50155636

STATE OF ALABAMA
No. 24747
PROFESSIONAL
09-15-2022
ENGINEER
WADE STEWART

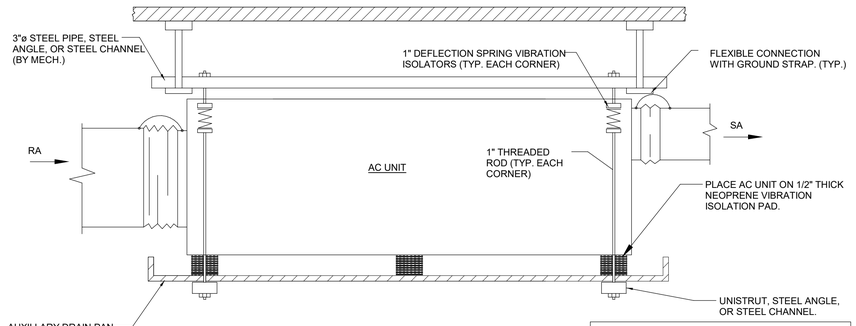

1. AUX. DRAIN PAN SHALL BE 3" LARGER (ALL 4 SIDES) THAN AC UNIT AND SHALL BE 3" DEEP. TOP EDGE SHALL BE HEMMED. FABRICATE FROM 18 GA. GALVANIZED STEEL, SEAL WATERTIGHT.

2. PROVIDE FLOAT SWITCH IN AUX. DRAIN PAN, WIRED TO SHUT DOWN AC UNIT.

NOTES

1. ROUTE CONDENSATE DRAIN LINE TO NEAREST HUB DRAIN BOX. SEE PIPING PLAN & SEE PLUMBING.

2. PROVIDE MINIMUM OF 36" CLEARANCE ON CONTROL PANEL SIDE OF UNIT TO ACCESS FILTERS, MOTOR, COILS, ETC.

AC UNIT SUSPENDED FROM STRUCTURE

NO SCALE

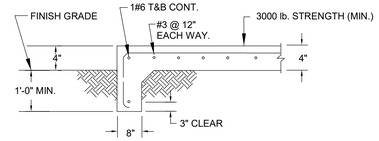

CONCRETE PAD DETAIL

NO SCALE

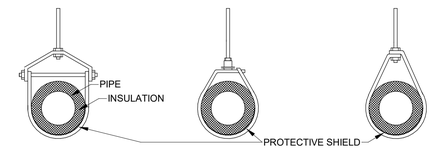

PIPE SIZE	1/2"	3/4"	1"	1 1/4"	1 1/2"	2"	2 1/2"	3"	4"	6"	8"	10"
ROD DIAMETER	3/8"	3/8"	3/8"	3/8"	3/8"	3/8"	3/8"	1/2"	5/8"	3/4"	7/8"	7/8"
SPACING	6'	8'	8'	8'	10'	10'	10'	10'	10'	10'	10'	10'

NOTE: LOCATE ADDITIONAL HANGERS AT VALVES AND AT CHANGES IN DIRECTION.

* SPACING FOR PIPE HANGERS FOR PIPE SIZES LARGER THAN 3" AND HUNG FROM BAR JOISES SHALL BE DETERMINED BY STRUCTURAL ENGINEER. SEE STRUCTURAL DRAWINGS AND SPECIFICATIONS.

PIPE HANGER DETAIL

NO SCALE

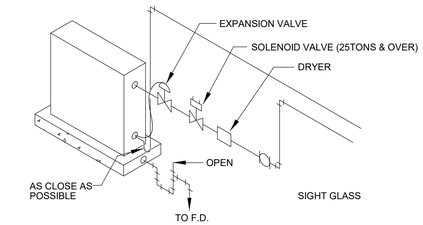

DX COIL PIPING DETAIL

NO SCALE

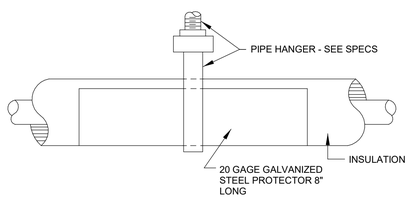

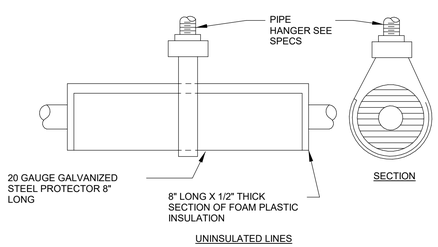

REFRIGERANT PIPING HANGER DETAIL

NO SCALE

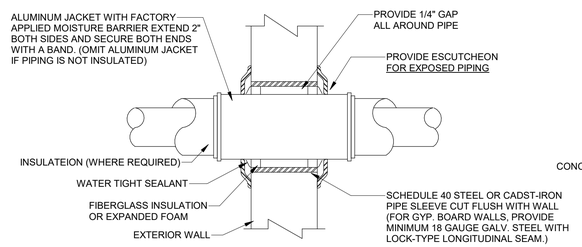

PIPE PENETRATION DETAIL

NO SCALE

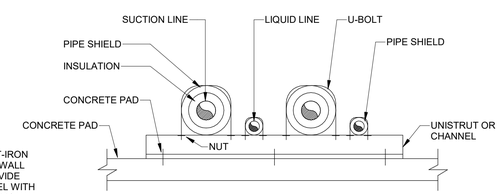

REFRIGERANT PIPE SUPPORT FROM CONCRETE PAD DETAIL

NO SCALE

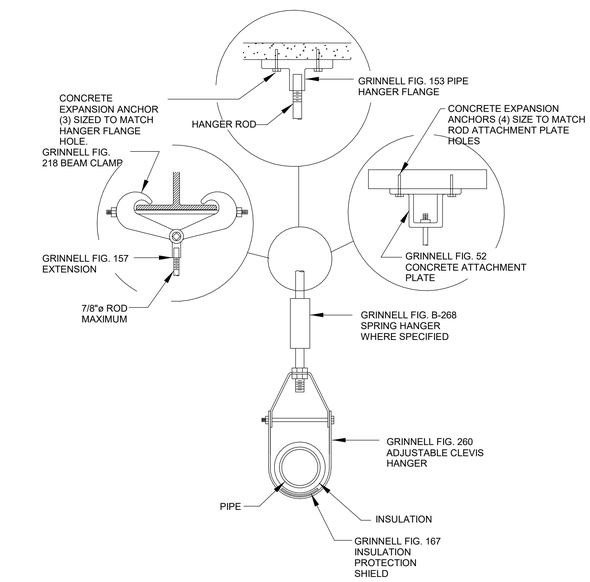

CLEVIS HANGER DETAIL

NO SCALE

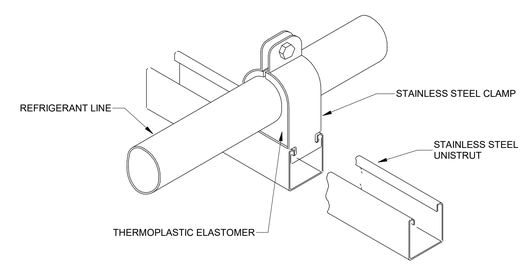

REFRIGERANT LINE SUPPORT DETAIL

NO SCALE

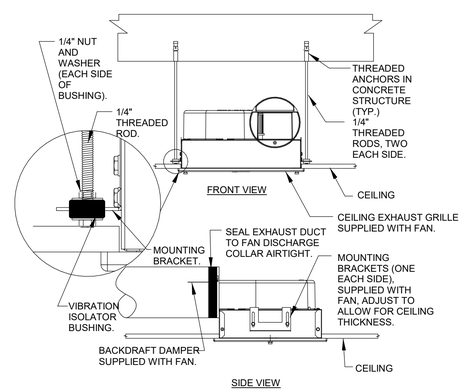

CEILING EXHAUST FAN DETAIL

NO SCALE

MINIMUM CONDENSATE PIPE SIZE	
AC TONS	MIN. DRAIN SIZE
0 TO 20	1"
21 TO 40	1-1/4"
41 TO 60	1-1/2"
61 TO 100	2"
101 TO 250	3"
251 & LARGER	4"

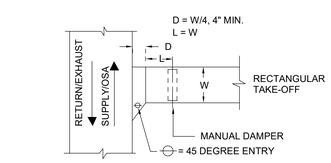

RECTANGULAR DUCT TAKE-OFF

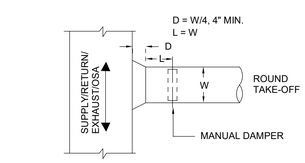

ROUND DUCT TAKE-OFF

DUCT TAKE-OFF CONNECTION DETAIL

NO SCALE

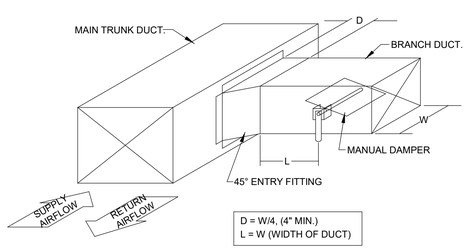

DUCT BRANCH CONNECTION

NO SCALE

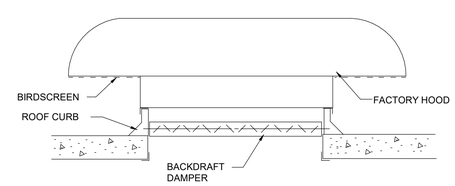

EXHAUST HOOD DETAIL

NO SCALE

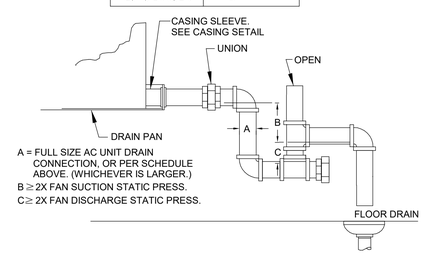

A = FULL SIZE AC UNIT DRAIN CONNECTION, OR PER SCHEDULE ABOVE. (WHICHEVER IS LARGER.)
B ≥ 2X FAN SUCTION STATIC PRESS.
C ≥ 2X FAN DISCHARGE STATIC PRESS.

AC UNIT DRAIN TRAP DETAIL

NO SCALE

THOMAS M. McELRATH, ARCHITECT
ARCHITECTURE and SPACE PLANNING
717 MERIT SPRINGS ROAD
GADSDEN, ALABAMA 35901
PHONE: (256) 490-8244
EMAIL: TOM@TMM-ARCHITECT.COM

A NEW SENIOR WELLNESS CENTER
2829 W. Meighan Boulevard
for the
City of Gadsden, Alabama

DRAWN	RBG
CHECKED	JWS
SCALE	AS NOTED
DATE	09/15/2022
FILE	
JOB NO.	22-01
REVISIONS	

SHEET
M0.3
OF
X
NUMBER

Dewberry | EDMONDS
2 Riverchase Office Plaza
Suite 205
Hoover, AL 35244
(205) 988-2069
www.dewberry.com
Project Number :
50155636

STATE OF ALABAMA
No. 24747
PROFESSIONAL
09-15-2022
ENGINEER
WADE STEWART

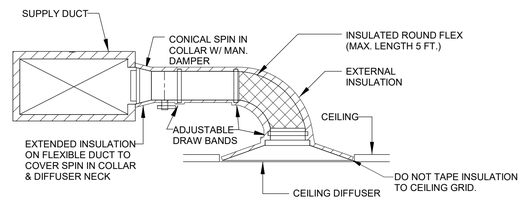

NOTE:
1. WHEREVER THE SUPPLY DUCT HEIGHT IS INSUFFICIENT TO CONNECT THE SPIN-IN, THE SPIN-IN MAY BE CONNECTED TO THE TOP OR BOTTOM OF THE DUCT. IF THE BRANCH DUCT MUST BE CONNECTED TO THE SIDE OF THE MAIN DUCT, USE A RECTANGULAR BRANCH DUCT CONNECTION OF EQUAL AIR VELOCITY AND TRANSITION TO ROUND DUCT. REFER TO SPECIFICATION FOR MAXIMUM TURNS IN FLEX DUCT.
2. PROVIDE EXTERNAL INSULATION ON ALL ROUND BRANCH DUCTWORK.SEE SPECS FOR THICKNESS AND EXTENT.
3. PROVIDE EXTERNAL INSULATION ON BACK SIDE OF CEILING DIFFUSERS. THICKNESS TO MATCH BRANCH DUCT INSULATION THICKNESS.

CEILING DIFFUSER INSTALLATION DETAIL
NO SCALE

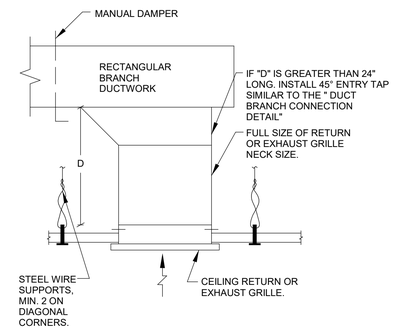

CEILING RETURN/EXHAUST BRANCH CONNECTION DETAIL
NO SCALE

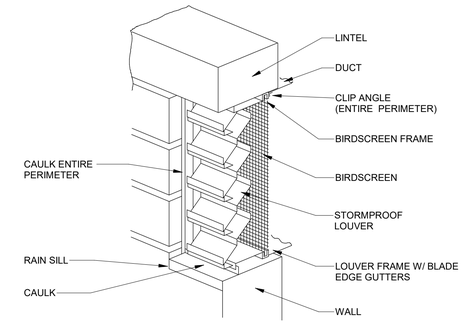

TYPICAL HVAC WALL LOUVER
NO SCALE

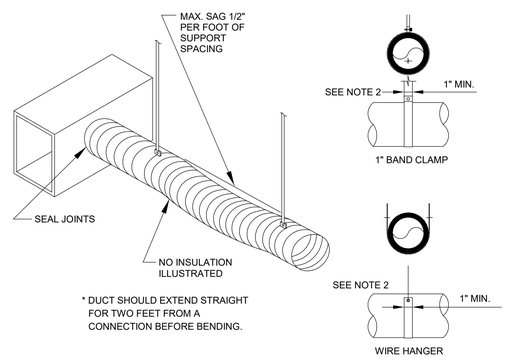

* DUCT SHOULD EXTEND STRAIGHT FOR TWO FEET FROM A CONNECTION BEFORE BENDING.

NOTES:
1. SUPPORT SYSTEM MUST NOT DAMAGE DUCT OR CAUSE OUT OF ROUND SHAPE.
2. DUCTS ARE FLEXIBLE WITH EXTERNAL INSULATION AND VAPOR BARRIER JACKETING.
3. MIN. CENTER LINE BEND LINE RADIUS IS ONE DIA. (OR INSIDE RADIUS OF D/2).
4. FLEXIBLE DUCT LENGTH SHALL NOT EXCEED 5 LINEAR FEET.

FLEXIBLE DUCT SUPPORT DETAIL
NO SCALE

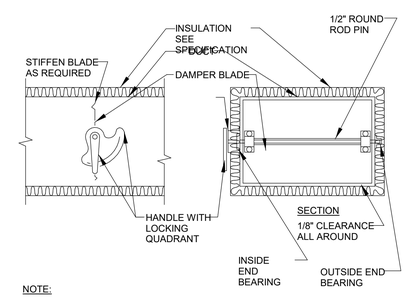

NOTE:
1. DELETE INSULATION STAND-OFF ON DUCTWORK WITHOUT EXTERIOR INSULATION.
2. DETAIL SHOWS SINGLE BLADE DAMPER. DAMPER INSTALLATION SHALL BE SIMILAR FOR MULTI-BLADE DAMPERS & ROUND DAMPERS.
3. MANUAL DAMPERS SHALL BE EQUAL TO RUSKIN MD35 (FOR RECTANGULAR DUCTS) AND SHALL BE EQUAL TO RUSKIN MDRS25 (FOR ROUND DUCTS).

MANUAL DAMPER DETAIL
NO SCALE

THOMAS M. McELRATH, ARCHITECT
ARCHITECTURE and SPACE PLANNING
717 MERIT SPRINGS ROAD
GADSDEN, ALABAMA 35901
PHONE: (256) 490-8244
EMAIL: TOM@TMM-ARCHITECT.COM

A NEW SENIOR WELLNESS CENTER
2829 W. Meighan Boulevard
for the
City of Gadsden, Alabama

DRAWN	RBG
CHECKED	JWS
SCALE	AS NOTED
DATE	09/15/2022
FILE	
JOB NO.	22-01
REVISIONS	

SHEET
M0.4
OF
NUMBER

Dewberry | EDMONDS
2 Riverchase Office Plaza
Suite 205
Hoover, AL 35244
(205) 988-2069
www.dewberry.com
Project Number : 50155636

No. 24747 PROFESSIONAL 09-15-2022 ENGINEER WADE STEWART ALABAMA

THOMAS M. McELRATH, ARCHITECT
ARCHITECTURE and SPACE PLANNING
717 MERIT SPRINGS ROAD
GADSDEN, ALABAMA 35901
PHONE: (256) 490-8244
EMAIL: TOM@TMM-ARCHITECT.COM

A NEW SENIOR WELLNESS CENTER
2829 W. Meighan Boulevard
for the
City of Gadsden, Alabama

(Quantity) Zone Tag	Facility Type	Zone Use	Zone Floor Area (square ft) Az	Zone Max Occupancy Pz	Table 6.1 OA per Occupant Rp	Table 6.1 cfm/ft2 Ra	Pz * Rp Pz * Rp	Az * Ra Az * Ra	Table 6.2 Ventilation Effectiveness Ez	Outdoor Air to Zone (CFM) with Ez correction (Vbz/Ez)
(2) - 105 - MEETING ROOM	General	Conference/Meeting	454.0	22.0	5.0	0.06	110	27	0.8	172 OA required per VRP

Zone Height (feet)	12
Desired Outside Air (Vo) IAQP	110
Supply Air (Vs)	500
Return Air (Vr)	390
Recirc. Flow Factor (R)	0.78
Ventilation Effectiveness (Ez)	0.8
Level of Physical Activity	**Sedentary**
Filter Location	B
HVAC Flow Type	Constant
Outdoor Air Flow Type	Constant

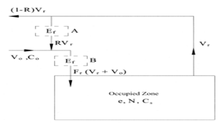

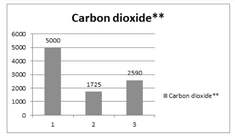

***OSHA, NIOSH & WHO most conservative values used
http://www.cdc.gov/niosh/npg/npgsyn-a.html
1 = ASHRAE & NIOSH C02 Limit
2 = C02 Level at Ventilation Rate OA Flow Rate
3 = C02 Level at IAQ Procedure OA Flow Rate
**Carbon dioxide has been provided for reference only for gathering demand control ventilation (DCV) setpoints. The National Research Council was commissioned by the US Navy to prove C02 is not a contaminant of concern when using air purification to control the other contaminants of concern, as found on submarines.

* = worst case

Indoor Contaminants Generated By People & From Outdoors	Maximum Threshold Value (PPM)	Steady State Using the VRP* (Prescribed OA) Plasma Off	Steady State Using the IAQ Method (Reduced OA) Plasma On	Is Steady State Level Acceptable at Reduced OA Levels?	Contaminant Generation Rate (PPM)	Filtration Effectiveness	Cognizant Authority***
Acetaldehyde	100.0	0.01114	0.00203	Yes	0.00032	50%	OSHA
Acetone	250.0	0.00196	0.00062	Yes	0.00433	50%	NIOSH
Ammonia	25.00	0.02450	0.01312	Yes	0.14210	50%	NIOSH
Benzene	1.0000	0.00253	0.00046	Yes	0.00015	50%	OSHA
2- Butanone (MEK)	200.0	0.00024	0.00010	Yes	0.00088	50%	NIOSH
Carbon dioxide**	5000	1725	2590	Yes	292	0%	NIOSH
Chloroform	2.0000	0.00011	0.00002	Yes	0.00003	50%	NIOSH
Dioxane	100.0	0.00000	0.00000	Yes	0.00000	50%	OSHA
Hydrogen Sulfide	10.0	0.00000	0.00000	Yes	0.00000	50%	NIOSH
Methane	NA	1.68094	1.68094	Yes	0.00000	0%	NA
Methanol	200.0	0.00000	0.00000	Yes	0.00000	0%	NIOSH
Methylene Chloride	25.0	0.00082	0.00020	Yes	0.00080	50%	OSHA
Propane	1000.0	0.00998	0.00998	Yes	0.00000	0%	NIOSH
Tetrachloroethane	5.0000	0.00000	0.00000	Yes	0.00000	50%	OSHA
Tetrachloroethylene	100.0000	0.00037	0.00007	Yes	0.00001	50%	OSHA
Toluene	100.0000	0.00534	0.00098	Yes	0.00021	50%	NIOSH
1,1,1 - Trichloroethane	350.0000	0.00079	0.00017	Yes	0.00038	50%	NIOSH
Xylene	100.0000	0.00230	0.00042	Yes	0.00000	50%	OSHA

Building materials and furnishings assumed to have no VOCs and off-gassing is complete

Is IAQ acceptable at reduced outside air levels? Yes

Zone Tag	Facility Type	Zone Use	Zone Floor Area (square ft) Az	Zone Max Occupancy Pz	Table 6.1 OA per Occupant Rp	Table 6.1 cfm/ft2 Ra	Pz * Rp Pz * Rp	Az * Ra Az * Ra	Table 6.2 Ventilation Effectiveness Ez	Outdoor Air to Zone (CFM) with Ez correction (Vbz/Ez)
105 - CLASSROOM/TRAINING	General	Classrooms (AGE 9 +)	514.0	18.0	5.0	0.12	90	62	0.8	190 OA required per VRP

Zone Height (feet)	12
Desired Outside Air (Vo) IAQP	90
Supply Air (Vs)	600
Return Air (Vr)	510
Recirc. Flow Factor (R)	0.85
Ventilation Effectiveness (Ez)	0.8
Level of Physical Activity	**Sedentary**
Filter Location	B
HVAC Flow Type	Constant
Outdoor Air Flow Type	Constant

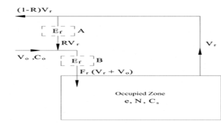

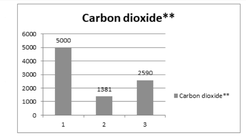

***OSHA, NIOSH & WHO most conservative values used
http://www.cdc.gov/niosh/npg/npgsyn-a.html
1 = ASHRAE & NIOSH C02 Limit
2 = C02 Level at Ventilation Rate OA Flow Rate
3 = C02 Level at IAQ Procedure OA Flow Rate
**Carbon dioxide has been provided for reference only for gathering demand control ventilation (DCV) setpoints. The National Research Council was commissioned by the US Navy to prove C02 is not a contaminant of concern when using air purification to control the other contaminants of concern, as found on submarines.

* = worst case

Indoor Contaminants Generated By People & From Outdoors	Maximum Threshold Value (PPM)	Steady State Using the VRP* (Prescribed OA) Plasma Off	Steady State Using the IAQ Method (Reduced OA) Plasma On	Is Steady State Level Acceptable at Reduced OA Levels?	Contaminant Generation Rate (PPM)	Filtration Effectiveness	Cognizant Authority***
Acetaldehyde	100.0	0.01113	0.00147	Yes	0.00032	50%	OSHA
Acetone	250.0	0.00178	0.00045	Yes	0.00433	50%	NIOSH
Ammonia	25.00	0.01859	0.00949	Yes	0.14210	50%	NIOSH
Benzene	1.0000	0.00252	0.00034	Yes	0.00015	50%	OSHA
2- Butanone (MEK)	200.0	0.00021	0.00007	Yes	0.00088	50%	NIOSH
Carbon dioxide**	5000	1381	2590	Yes	292	0%	NIOSH
Chloroform	2.0000	0.00011	0.00002	Yes	0.00003	50%	NIOSH
Dioxane	100.0	0.00000	0.00000	Yes	0.00000	50%	OSHA
Hydrogen Sulfide	10.0	0.00000	0.00000	Yes	0.00000	50%	NIOSH
Methane	NA	1.68094	1.68094	Yes	0.00000	0%	NA
Methanol	200.0	0.00000	0.00000	Yes	0.00000	0%	NIOSH
Methylene Chloride	25.0	0.00079	0.00014	Yes	0.00080	50%	OSHA
Propane	1000.0	0.00998	0.00998	Yes	0.00000	0%	NIOSH
Tetrachloroethane	5.0000	0.00000	0.00000	Yes	0.00000	50%	OSHA
Tetrachloroethylene	100.0000	0.00037	0.00005	Yes	0.00001	50%	OSHA
Toluene	100.0000	0.00534	0.00071	Yes	0.00021	50%	NIOSH
1,1,1 - Trichloroethane	350.0000	0.00078	0.00012	Yes	0.00038	50%	NIOSH
Xylene	100.0000	0.00230	0.00030	Yes	0.00000	50%	OSHA

Building materials and furnishings assumed to have no VOCs and off-gassing is complete

Is IAQ acceptable at reduced outside air levels? Yes

Zone Tag	Facility Type	Zone Use	Zone Floor Area (square ft) Az	Zone Max Occupancy Pz	Table 6.1 OA per Occupant Rp	Table 6.1 cfm/ft2 Ra	Pz * Rp Pz * Rp	Az * Ra Az * Ra	Table 6.2 Ventilation Effectiveness Ez	Outdoor Air to Zone (CFM) with Ez correction (Vbz/Ez)
106 - BILLARD/CARDS	General	Conference/Meeting	791.0	18.0	5.0	0.06	90	47	0.8	172 OA required per VRP

Zone Height (feet)	12
Desired Outside Air (Vo) IAQP	90
Supply Air (Vs)	575
Return Air (Vr)	485
Recirc. Flow Factor (R)	0.84
Ventilation Effectiveness (Ez)	0.8
Level of Physical Activity	**Sedentary**
Filter Location	B
HVAC Flow Type	Constant
Outdoor Air Flow Type	Constant

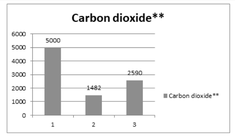

***OSHA, NIOSH & WHO most conservative values used
http://www.cdc.gov/niosh/npg/npgsyn-a.html
1 = ASHRAE & NIOSH C02 Limit
2 = C02 Level at Ventilation Rate OA Flow Rate
3 = C02 Level at IAQ Procedure OA Flow Rate
**Carbon dioxide has been provided for reference only for gathering demand control ventilation (DCV) setpoints. The National Research Council was commissioned by the US Navy to prove C02 is not a contaminant of concern when using air purification to control the other contaminants of concern, as found on submarines.

* = worst case

Indoor Contaminants Generated By People & From Outdoors	Maximum Threshold Value (PPM)	Steady State Using the VRP* (Prescribed OA) Plasma Off	Steady State Using the IAQ Method (Reduced OA) Plasma On	Is Steady State Level Acceptable at Reduced OA Levels?	Contaminant Generation Rate (PPM)	Filtration Effectiveness	Cognizant Authority***
Acetaldehyde	100.0	0.01113	0.00055	Yes	0.00032	50%	OSHA
Acetone	250.0	0.00183	0.00046	Yes	0.00433	50%	NIOSH
Ammonia	25.00	0.02033	0.00985	Yes	0.14210	50%	NIOSH
Benzene	1.0000	0.00252	0.00035	Yes	0.00015	50%	OSHA
2- Butanone (MEK)	200.0	0.00022	0.00007	Yes	0.00088	50%	NIOSH
Carbon dioxide**	5000	1482	2590	Yes	292	0%	NIOSH
Chloroform	2.0000	0.00011	0.00002	Yes	0.00003	50%	NIOSH
Dioxane	100.0	0.00000	0.00000	Yes	0.00000	50%	OSHA
Hydrogen Sulfide	10.0	0.00000	0.00000	Yes	0.00000	50%	NIOSH
Methane	NA	1.68094	1.68094	Yes	0.00000	0%	NA
Methanol	200.0	0.00000	0.00000	Yes	0.00000	0%	NIOSH
Methylene Chloride	25.0	0.00080	0.00015	Yes	0.00080	50%	OSHA
Propane	1000.0	0.00998	0.00998	Yes	0.00000	0%	NIOSH
Tetrachloroethane	5.0000	0.00000	0.00000	Yes	0.00000	50%	OSHA
Tetrachloroethylene	100.0000	0.00037	0.00005	Yes	0.00001	50%	OSHA
Toluene	100.0000	0.00534	0.00073	Yes	0.00021	50%	NIOSH
1,1,1 - Trichloroethane	350.0000	0.00078	0.00013	Yes	0.00038	50%	NIOSH
Xylene	100.0000	0.00230	0.00031	Yes	0.00000	50%	OSHA

Building materials and furnishings assumed to have no VOCs and off-gassing is complete

Is IAQ acceptable at reduced outside air levels? Yes

Zone Tag	Facility Type	Zone Use	Zone Floor Area (square ft) Az	Zone Max Occupancy Pz	Table 6.1 OA per Occupant Rp	Table 6.1 cfm/ft2 Ra	Pz * Rp Pz * Rp	Az * Ra Az * Ra	Table 6.2 Ventilation Effectiveness Ez	Outdoor Air to Zone (CFM) with Ez correction (Vbz/Ez)
106 - CRAFTS/CARDS	General	Conference/Meeting	779.0	28.0	5.0	0.06	140	47	0.8	233 OA required per VRP

Zone Height (feet)	12
Desired Outside Air (Vo) IAQP	140
Supply Air (Vs)	900
Return Air (Vr)	760
Recirc. Flow Factor (R)	0.84
Ventilation Effectiveness (Ez)	0.8
Level of Physical Activity	**Sedentary**
Filter Location	B
HVAC Flow Type	Constant
Outdoor Air Flow Type	Constant

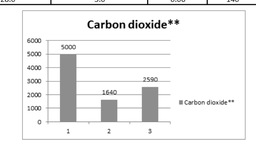

***OSHA, NIOSH & WHO most conservative values used
http://www.cdc.gov/niosh/npg/npgsyn-a.html
1 = ASHRAE & NIOSH C02 Limit
2 = C02 Level at Ventilation Rate OA Flow Rate
3 = C02 Level at IAQ Procedure OA Flow Rate
**Carbon dioxide has been provided for reference only for gathering demand control ventilation (DCV) setpoints. The National Research Council was commissioned by the US Navy to prove C02 is not a contaminant of concern when using air purification to control the other contaminants of concern, as found on submarines.

* = worst case

Indoor Contaminants Generated By People & From Outdoors	Maximum Threshold Value (PPM)	Steady State Using the VRP* (Prescribed OA) Plasma Off	Steady State Using the IAQ Method (Reduced OA) Plasma On	Is Steady State Level Acceptable at Reduced OA Levels?	Contaminant Generation Rate (PPM)	Filtration Effectiveness	Cognizant Authority***
Acetaldehyde	100.0	0.01114	0.00151	Yes	0.00032	50%	OSHA
Acetone	250.0	0.00191	0.00046	Yes	0.00433	50%	NIOSH
Ammonia	25.00	0.02303	0.00980	Yes	0.14210	50%	NIOSH
Benzene	1.0000	0.00253	0.00035	Yes	0.00015	50%	OSHA
2- Butanone (MEK)	200.0	0.00023	0.00007	Yes	0.00088	50%	NIOSH
Carbon dioxide**	5000	1640	2590	Yes	292	0%	NIOSH
Chloroform	2.0000	0.00011	0.00002	Yes	0.00003	50%	NIOSH
Dioxane	100.0	0.00000	0.00000	Yes	0.00000	50%	OSHA
Hydrogen Sulfide	10.0	0.00000	0.00000	Yes	0.00000	50%	NIOSH
Methane	NA	1.68094	1.68094	Yes	0.00000	0%	NA
Methanol	200.0	0.00000	0.00000	Yes	0.00000	0%	NIOSH
Methylene Chloride	25.0	0.00081	0.00015	Yes	0.00080	50%	OSHA
Propane	1000.0	0.00998	0.00998	Yes	0.00000	0%	NIOSH
Tetrachloroethane	5.0000	0.00000	0.00000	Yes	0.00000	50%	OSHA
Tetrachloroethylene	100.0000	0.00037	0.00005	Yes	0.00001	50%	OSHA
Toluene	100.0000	0.00534	0.00073	Yes	0.00021	50%	NIOSH
1,1,1 - Trichloroethane	350.0000	0.00079	0.00012	Yes	0.00038	50%	NIOSH
Xylene	100.0000	0.00230	0.00031	Yes	0.00000	50%	OSHA

Building materials and furnishings assumed to have no VOCs and off-gassing is complete

Is IAQ acceptable at reduced outside air levels? Yes

Zone Tag	Facility Type	Zone Use	Zone Floor Area (square ft) Az	Zone Max Occupancy Pz	Table 6.1 OA per Occupant Rp	Table 6.1 cfm/ft2 Ra	Pz * Rp Pz * Rp	Az * Ra Az * Ra	Table 6.2 Ventilation Effectiveness Ez	Outdoor Air to Zone (CFM) with Ez correction (Vbz/Ez)
106 - EXERCISE/WEIGHTS	General	Health Club/Aerobics Room	425.0	6.0	5.0	0.06	30	26	0.8	69 OA required per VRP

Zone Height (feet)	12
Desired Outside Air (Vo) IAQP	30
Supply Air (Vs)	580
Return Air (Vr)	550
Recirc. Flow Factor (R)	0.95
Ventilation Effectiveness (Ez)	0.8
Level of Physical Activity	**Sedentary**
Filter Location	B
HVAC Flow Type	Constant
Outdoor Air Flow Type	Constant

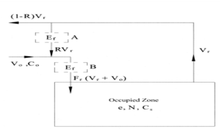

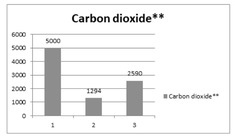

***OSHA, NIOSH & WHO most conservative values used
http://www.cdc.gov/niosh/npg/npgsyn-a.html
1 = ASHRAE & NIOSH C02 Limit
2 = C02 Level at Ventilation Rate OA Flow Rate
3 = C02 Level at IAQ Procedure OA Flow Rate
**Carbon dioxide has been provided for reference only for gathering demand control ventilation (DCV) setpoints. The National Research Council was commissioned by the US Navy to prove C02 is not a contaminant of concern when using air purification to control the other contaminants of concern, as found on submarines.

* = worst case

Indoor Contaminants Generated By People & From Outdoors	Maximum Threshold Value (PPM)	Steady State Using the VRP* (Prescribed OA) Plasma Off	Steady State Using the IAQ Method (Reduced OA) Plasma On	Is Steady State Level Acceptable at Reduced OA Levels?	Contaminant Generation Rate (PPM)	Filtration Effectiveness	Cognizant Authority***
Acetaldehyde	100.0	0.01112	0.00055	Yes	0.00032	50%	OSHA
Acetone	250.0	0.00173	0.00017	Yes	0.00433	50%	NIOSH
Ammonia	25.00	0.01709	0.00358	Yes	0.14210	50%	NIOSH
Benzene	1.0000	0.00252	0.00013	Yes	0.00015	50%	OSHA
2- Butanone (MEK)	200.0	0.00020	0.00003	Yes	0.00088	50%	NIOSH
Carbon dioxide**	5000	1294	2590	Yes	292	0%	NIOSH
Chloroform	2.0000	0.00011	0.00001	Yes	0.00003	50%	NIOSH
Dioxane	100.0	0.00000	0.00000	Yes	0.00000	50%	OSHA
Hydrogen Sulfide	10.0	0.00000	0.00000	Yes	0.00000	50%	NIOSH
Methane	NA	1.68094	1.68094	Yes	0.00000	0%	NA
Methanol	200.0	0.00000	0.00000	Yes	0.00000	0%	NIOSH
Methylene Chloride	25.0	0.00078	0.00005	Yes	0.00080	50%	OSHA
Propane	1000.0	0.00998	0.00998	Yes	0.00000	0%	NIOSH
Tetrachloroethane	5.0000	0.00000	0.00000	Yes	0.00000	50%	OSHA
Tetrachloroethylene	100.0000	0.00037	0.00002	Yes	0.00001	50%	OSHA
Toluene	100.0000	0.00533	0.00027	Yes	0.00021	50%	NIOSH
1,1,1 - Trichloroethane	350.0000	0.00077	0.00005	Yes	0.00038	50%	NIOSH
Xylene	100.0000	0.00230	0.00011	Yes	0.00000	50%	OSHA

Building materials and furnishings assumed to have no VOCs and off-gassing is complete

Is IAQ acceptable at reduced outside air levels? Yes

Zone Tag	Facility Type	Zone Use	Zone Floor Area (square ft) Az	Zone Max Occupancy Pz	Table 6.1 OA per Occupant Rp	Table 6.1 cfm/ft2 Ra	Pz * Rp Pz * Rp	Az * Ra Az * Ra	Table 6.2 Ventilation Effectiveness Ez	Outdoor Air to Zone (CFM) with Ez correction (Vbz/Ez)
106 - KITCHEN	General	Cafeteria/Fast Food Dining	333.0	3.0	5.0	0.18	15	60	0.8	94 OA required per VRP

Zone Height (feet)	12
Desired Outside Air (Vo) IAQP	15
Supply Air (Vs)	400
Return Air (Vr)	385
Recirc. Flow Factor (R)	0.96
Ventilation Effectiveness (Ez)	0.8
Level of Physical Activity	**Sedentary**
Filter Location	B
HVAC Flow Type	Constant
Outdoor Air Flow Type	Constant

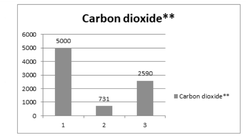

***OSHA, NIOSH & WHO most conservative values used
http://www.cdc.gov/niosh/npg/npgsyn-a.html
1 = ASHRAE & NIOSH C02 Limit
2 = C02 Level at Ventilation Rate OA Flow Rate
3 = C02 Level at IAQ Procedure OA Flow Rate
**Carbon dioxide has been provided for reference only for gathering demand control ventilation (DCV) setpoints. The National Research Council was commissioned by the US Navy to prove C02 is not a contaminant of concern when using air purification to control the other contaminants of concern, as found on submarines.

* = worst case

Indoor Contaminants Generated By People & From Outdoors	Maximum Threshold Value (PPM)	Steady State Using the VRP* (Prescribed OA) Plasma Off	Steady State Using the IAQ Method (Reduced OA) Plasma On	Is Steady State Level Acceptable at Reduced OA Levels?	Contaminant Generation Rate (PPM)	Filtration Effectiveness	Cognizant Authority***
Acetaldehyde	100.0	0.01110	0.00041	Yes	0.00032	50%	OSHA
Acetone	250.0	0.00144	0.00012	Yes	0.00433	50%	NIOSH
Ammonia	25.00	0.00741	0.00263	Yes	0.14210	50%	NIOSH
Benzene	1.0000	0.00251	0.00009	Yes	0.00015	50%	OSHA
2- Butanone (MEK)	200.0	0.00014	0.00002	Yes	0.00088	50%	NIOSH
Carbon dioxide**	5000	731	2590	Yes	292	0%	NIOSH
Chloroform	2.0000	0.00011	0.00000	Yes	0.00003	50%	NIOSH
Dioxane	100.0	0.00000	0.00000	Yes	0.00000	50%	OSHA
Hydrogen Sulfide	10.0	0.00000	0.00000	Yes	0.00000	50%	NIOSH
Methane	NA	1.68094	1.68094	Yes	0.00000	0%	NA
Methanol	200.0	0.00000	0.00000	Yes	0.00000	0%	NIOSH
Methylene Chloride	25.0	0.00072	0.00004	Yes	0.00080	50%	OSHA
Propane	1000.0	0.00998	0.00998	Yes	0.00000	0%	NIOSH
Tetrachloroethane	5.0000	0.00000	0.00000	Yes	0.00000	50%	OSHA
Tetrachloroethylene	100.0000	0.00037	0.00001	Yes	0.00001	50%	OSHA
Toluene	100.0000	0.00533	0.00020	Yes	0.00021	50%	NIOSH
1,1,1 - Trichloroethane	350.0000	0.00075	0.00003	Yes	0.00038	50%	NIOSH
Xylene	100.0000	0.00230	0.00008	Yes	0.00000	50%	OSHA

Building materials and furnishings assumed to have no VOCs and off-gassing is complete

Is IAQ acceptable at reduced outside air levels? Yes

DRAWN	RBG
CHECKED	JWS
SCALE	AS NOTED
DATE	09/15/2022
FILE	
JOB NO.	22-01
REVISIONS	

SHEET M0.5 OF X NUMBER

Dewberry | EDMONDS
2 Riverchase Office Plaza
Suite 205
Hoover, AL 35244
(205) 988-2069
www.dewberry.com

Project Number :
50155636

STATE OF ALABAMA
No. 24747
PROFESSIONAL
09-15-2022
ENGINEER
WADE STEWART

Zone Tag	Facility Type	Zone Use	Zone Floor Area (square ft) Az	Zone Max Occupancy Pz	Table 6.1 OA per Occupant Rp	Table 6.1 cfm/ft2 Ra	Pz * Rp Pz * Rp	Az * Ra Az * Ra	Table 6.2 Ventilation Effectiveness Ez	Outdoor Air to Zone (CFM) with Ez correction (Vbz/Ez)
106 - SENIOR NUTRITION	General	Cafeteria/Fast Food Dining	899.0	36.0	5.0	0.18	180	162	0.8	427
										OA required per VRP

Zone Height (feet)	12
Desired Outside Air (Vo) IAQP	180
Supply Air (Vs)	1,055
Return Air (Vr)	875
Recirc. Flow Factor (R)	0.83
Ventilation Effectiveness (Ez)	0.8
Level of Physical Activity	**Sedentary**
Filter Location	B
HVAC Flow Type	Constant
Outdoor Air Flow Type	Constant

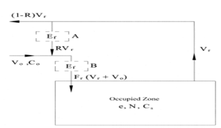

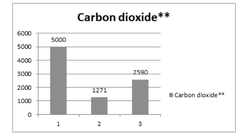

***OSHA, NIOSH & WHO most conservative values used
http://www.cdc.gov/niosh/npg/npgsyn-a.html
1 = ASHRAE & NIOSH C02 Limit
2 = C02 Level at Ventilation Rate OA Flow Rate
3 = C02 Level at IAQ Procedure OA Flow Rate
**Carbon dioxide has been provided for reference only for gathering demand control ventilation (DCV) setpoints. The National Research Council was commissioned by the US Navy to prove C02 is not a contaminant of concern when using air purification to control the other contaminants of concern, as found on submarines.

Indoor Contaminants Generated By People & From Outdoors	Maximum Threshold Value (PPM)	Steady State Using the VRP* (Prescribed OA) Plasma Off	Steady State Using the IAQ Method (Reduced OA) Plasma On	Is Steady State Level Acceptable at Reduced OA Levels?	Contaminant Generation Rate (PPM)	Filtration Effectiveness	Cognizant Authority***
Acetaldehyde	100.0	0.01112	0.00164	Yes	0.00032	50%	OSHA
Acetone	250.0	0.00172	0.00050	Yes	0.00433	50%	NIOSH
Ammonia	25.00	0.01669	0.01061	Yes	0.14210	50%	NIOSH
Benzene	1.0000	0.00252	0.00038	Yes	0.00015	50%	OSHA
2- Butanone (MEK)	200.0	0.00019	0.00008	Yes	0.00088	50%	NIOSH
Carbon dioxide**	5000	1271	2590	Yes	292	0%	NIOSH
Chloroform	2.0000	0.00011	0.00002	Yes	0.00003	50%	NIOSH
Dioxane	100.0	0.00000	0.00000	Yes	0.00000	50%	OSHA
Hydrogen Sulfide	10.0	0.00000	0.00000	Yes	0.00000	50%	NIOSH
Methane	NA	1.68094	1.68094	Yes	0.00000	0%	NA
Methanol	200.0	0.00000	0.00000	Yes	0.00000	0%	NIOSH
Methylene Chloride	25.0	0.00078	0.00016	Yes	0.00080	50%	OSHA
Propane	1000.0	0.00998	0.00998	Yes	0.00000	0%	NIOSH
Tetrachloroethane	5.0000	0.00000	0.00000	Yes	0.00000	50%	OSHA
Tetrachloroethylene	100.0000	0.00037	0.00005	Yes	0.00001	50%	OSHA
Toluene	100.0000	0.00533	0.00079	Yes	0.00021	50%	NIOSH
1,1,1 - Trichloroethane	350.0000	0.00077	0.00013	Yes	0.00038	50%	NIOSH
Xylene	100.0000	0.00230	0.00034	Yes	0.00000	50%	OSHA

* = worst case

88

Building materials and furnishings assumed to have no VOCs and off-gassing is complete

Is IAQ acceptable at reduced outside air levels? Yes

(Quantity) - Zone Tag	Facility Type	Zone Use	Zone Floor Area (square ft) Az	Zone Max Occupancy Pz	Table 6.1 OA per Occupant Rp	Table 6.1 cfm/ft2 Ra	Pz * Rp Pz * Rp	Az * Ra Az * Ra	Table 6.2 Ventilation Effectiveness Ez	Outdoor Air to Zone (CFM) with Ez correction (Vbz/Ez)
(2) - 107 - Health SCR	General	Office Space	118.0	1.0	5.0	0.06	5	7	0.8	15
										OA required per VRP

Zone Height (feet)	12
Desired Outside Air (Vo) IAQP	5
Supply Air (Vs)	80
Return Air (Vr)	75
Recirc. Flow Factor (R)	0.94
Ventilation Effectiveness (Ez)	0.8
Level of Physical Activity	**Sedentary**
Filter Location	B
HVAC Flow Type	Constant
Outdoor Air Flow Type	Constant

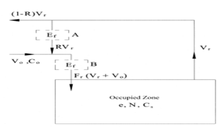

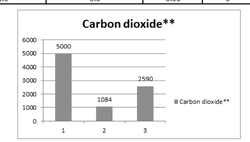

***OSHA, NIOSH & WHO most conservative values used
http://www.cdc.gov/niosh/npg/npgsyn-a.html
1 = ASHRAE & NIOSH C02 Limit
2 = C02 Level at Ventilation Rate OA Flow Rate
3 = C02 Level at IAQ Procedure OA Flow Rate
**Carbon dioxide has been provided for reference only for gathering demand control ventilation (DCV) setpoints. The National Research Council was commissioned by the US Navy to prove C02 is not a contaminant of concern when using air purification to control the other contaminants of concern, as found on submarines.

Indoor Contaminants Generated By People & From Outdoors	Maximum Threshold Value (PPM)	Steady State Using the VRP* (Prescribed OA) Plasma Off	Steady State Using the IAQ Method (Reduced OA) Plasma On	Is Steady State Level Acceptable at Reduced OA Levels?	Contaminant Generation Rate (PPM)	Filtration Effectiveness	Cognizant Authority***
Acetaldehyde	100.0	0.01111	0.00066	Yes	0.00032	50%	OSHA
Acetone	250.0	0.00162	0.00020	Yes	0.00433	50%	NIOSH
Ammonia	25.00	0.01349	0.00428	Yes	0.14210	50%	NIOSH
Benzene	1.0000	0.00252	0.00015	Yes	0.00015	50%	OSHA
2- Butanone (MEK)	200.0	0.00017	0.00003	Yes	0.00088	50%	NIOSH
Carbon dioxide**	5000	1084	2590	Yes	292	0%	NIOSH
Chloroform	2.0000	0.00011	0.00001	Yes	0.00003	50%	NIOSH
Dioxane	100.0	0.00000	0.00000	Yes	0.00000	50%	OSHA
Hydrogen Sulfide	10.0	0.00000	0.00000	Yes	0.00000	50%	NIOSH
Methane	NA	1.68094	1.68094	Yes	0.00000	0%	NA
Methanol	200.0	0.00000	0.00000	Yes	0.00000	0%	NIOSH
Methylene Chloride	25.0	0.00076	0.00006	Yes	0.00080	50%	OSHA
Propane	1000.0	0.00998	0.00998	Yes	0.00000	0%	NIOSH
Tetrachloroethane	5.0000	0.00000	0.00000	Yes	0.00000	50%	OSHA
Tetrachloroethylene	100.0000	0.00037	0.00002	Yes	0.00001	50%	OSHA
Toluene	100.0000	0.00533	0.00032	Yes	0.00021	50%	NIOSH
1,1,1 - Trichloroethane	350.0000	0.00076	0.00005	Yes	0.00038	50%	NIOSH
Xylene	100.0000	0.00230	0.00014	Yes	0.00000	50%	OSHA

* = worst case

Building materials and furnishings assumed to have no VOCs and off-gassing is complete

Is IAQ acceptable at reduced outside air levels? Yes

Zone Tag	Facility Type	Zone Use	Zone Floor Area (square ft) Az	Zone Max Occupancy Pz	Table 6.1 OA per Occupant Rp	Table 6.1 cfm/ft2 Ra	Pz * Rp Pz * Rp	Az * Ra Az * Ra	Table 6.2 Ventilation Effectiveness Ez	Outdoor Air to Zone (CFM) with Ez correction (Vbz/Ez)
123 - Multi - Purpose Room	General	Multi-purpose Assembly	2,042.0	128.0	5.0	0.06	640	123	0.8	953
										OA required per VRP

Zone Height (feet)	12
Desired Outside Air (Vo) IAQP	640
Supply Air (Vs)	3,800
Return Air (Vr)	3160
Recirc. Flow Factor (R)	0.83
Ventilation Effectiveness (Ez)	0.8
Level of Physical Activity	**Sedentary**
Filter Location	B
HVAC Flow Type	Constant
Outdoor Air Flow Type	Constant

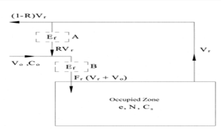

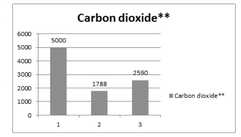

***OSHA, NIOSH & WHO most conservative values used
http://www.cdc.gov/niosh/npg/npgsyn-a.html
1 = ASHRAE & NIOSH C02 Limit
2 = C02 Level at Ventilation Rate OA Flow Rate
3 = C02 Level at IAQ Procedure OA Flow Rate
**Carbon dioxide has been provided for reference only for gathering demand control ventilation (DCV) setpoints. The National Research Council was commissioned by the US Navy to prove C02 is not a contaminant of concern when using air purification to control the other contaminants of concern, as found on submarines.

Indoor Contaminants Generated By People & From Outdoors	Maximum Threshold Value (PPM)	Steady State Using the VRP* (Prescribed OA) Plasma Off	Steady State Using the IAQ Method (Reduced OA) Plasma On	Is Steady State Level Acceptable at Reduced OA Levels?	Contaminant Generation Rate (PPM)	Filtration Effectiveness	Cognizant Authority***
Acetaldehyde	100.0	0.01114	0.00162	Yes	0.00032	50%	OSHA
Acetone	250.0	0.00199	0.00049	Yes	0.00433	50%	NIOSH
Ammonia	25.00	0.02558	0.01049	Yes	0.14210	50%	NIOSH
Benzene	1.0000	0.00253	0.00037	Yes	0.00015	50%	OSHA
2- Butanone (MEK)	200.0	0.00025	0.00008	Yes	0.00088	50%	NIOSH
Carbon dioxide**	5000	1788	2590	Yes	292	0%	NIOSH
Chloroform	2.0000	0.00011	0.00002	Yes	0.00003	50%	NIOSH
Dioxane	100.0	0.00000	0.00000	Yes	0.00000	50%	OSHA
Hydrogen Sulfide	10.0	0.00000	0.00000	Yes	0.00000	50%	NIOSH
Methane	NA	1.68094	1.68094	Yes	0.00000	0%	NA
Methanol	200.0	0.00000	0.00000	Yes	0.00000	0%	NIOSH
Methylene Chloride	25.0	0.00083	0.00016	Yes	0.00080	50%	OSHA
Propane	1000.0	0.00998	0.00998	Yes	0.00000	0%	NIOSH
Tetrachloroethane	5.0000	0.00000	0.00000	Yes	0.00000	50%	OSHA
Tetrachloroethylene	100.0000	0.00037	0.00005	Yes	0.00001	50%	OSHA
Toluene	100.0000	0.00534	0.00078	Yes	0.00021	50%	NIOSH
1,1,1 - Trichloroethane	350.0000	0.00080	0.00013	Yes	0.00038	50%	NIOSH
Xylene	100.0000	0.00230	0.00033	Yes	0.00000	50%	OSHA

* = worst case

Building materials and furnishings assumed to have no VOCs and off-gassing is complete

Is IAQ acceptable at reduced outside air levels? Yes

THOMAS M. McELRATH, ARCHITECT
ARCHITECTURE and SPACE PLANNING
717 MERIT SPRINGS ROAD
GADSDEN, ALABAMA 35901
PHONE: (256) 490-8244
EMAIL: TOM@TMM-ARCHITECT.COM

A NEW SENIOR WELLNESS CENTER
2829 W. Meighan Boulevard
for the
City of Gadsden, Alabama

DRAWN	RBG
CHECKED	JWS
SCALE	AS NOTED
DATE	09/15/2022
FILE	
JOB NO.	22-01
REVISIONS	

SHEET
M0.6
OF
XX
NUMBER

KEYED NOTES
1 EXHAUST DUCT UP THRU ROOF TO RELIEF HOOD.
2 OUTSIDE AIR DUCT WITH AUTO DAMPER UP THRU ROOF TO INTAKE HOOD.
3 MOUNT AC-1 ON RETURN AIR PLENUM. PROVIDE ANGLED STEEL FOR FRAMING - SEE DETAIL. CONNECT SA & RA WITH FLEX CONNECTIONS AT UNIT.

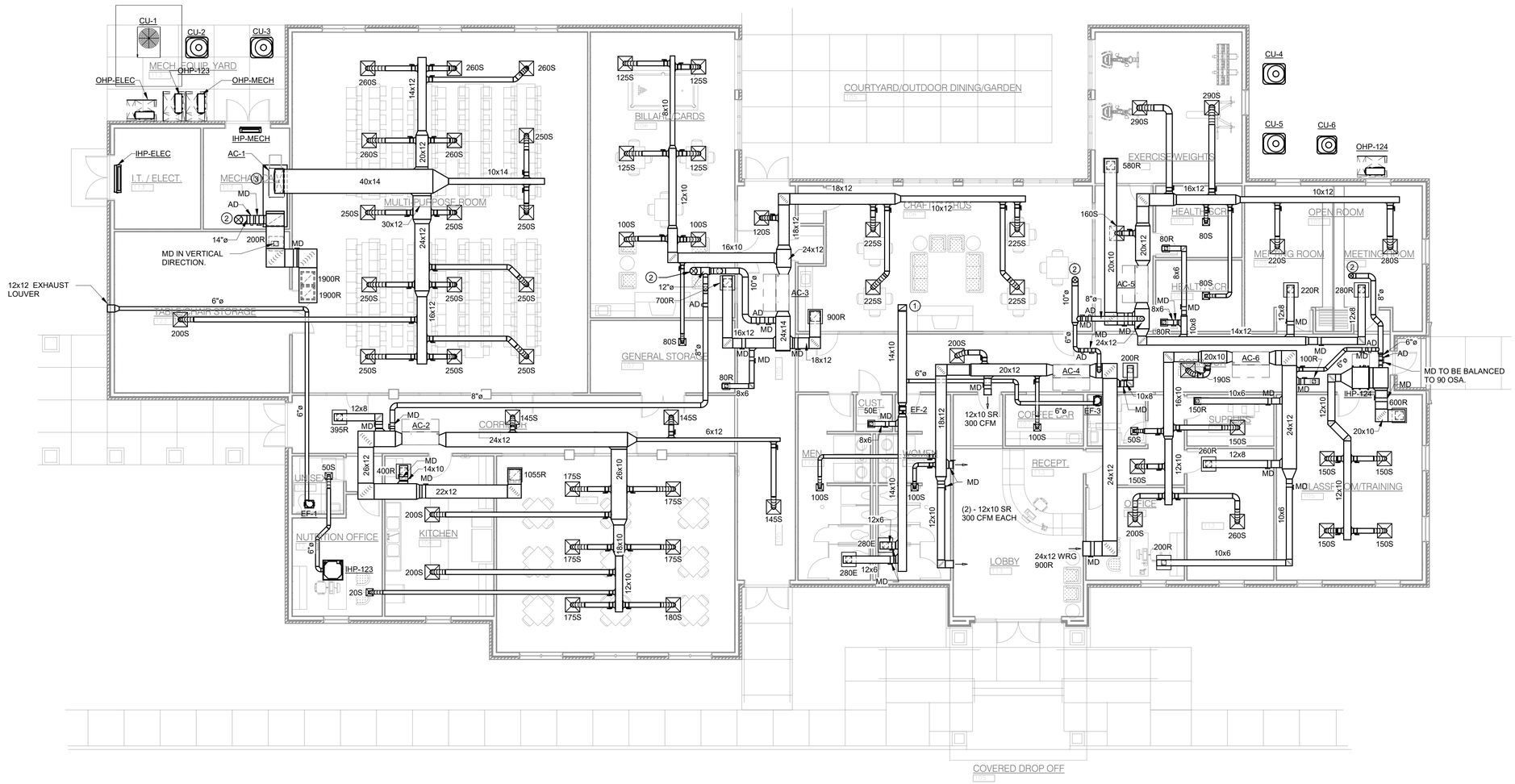

HVAC - FLOOR PLAN

1/8" = 1'-0"

PLAN NORTH

Dewberry | EDMONDS
2 Riverchase Office Plaza
Suite 205
Hoover, AL 35244
(205) 988-2069
www.dewberry.com
Project Number :
50155636

STATE OF ALABAMA
No. 24747
PROFESSIONAL
09-15-2022
ENGINEER
WADE STEWART

THOMAS M. McELRATH, ARCHITECT
ARCHITECTURE and SPACE PLANNING
717 MERIT SPRINGS ROAD
GADSDEN, ALABAMA 35901
PHONE: (256) 490-8244
EMAIL: TOM@TMM-ARCHITECT.COM

A NEW SENIOR WELLNESS CENTER
2829 W. Meighan Boulevard
for the
City of Gadsden, Alabama

DRAWN	RBG
CHECKED	JWS
SCALE	AS NOTED
DATE	09/15/2022
FILE	
JOB NO.	22-01
REVISIONS	

SHEET
M1.1
OF
X
NUMBER

Dewberry | EDMONDS
2 Riverchase Office Plaza
Suite 205
Hoover, AL 35244
(205) 988-2069
www.dewberry.com
Project Number :
50155636

STATE OF ALABAMA
No. 24747
PROFESSIONAL
09-15-2022
ENGINEER
WADE STEWART

THOMAS M. McELRATH, ARCHITECT
ARCHITECTURE and SPACE PLANNING
717 MERIT SPRINGS ROAD
GADSDEN, ALABAMA 35901
PHONE: (256) 490-8244
EMAIL: TOM@TMM-ARCHITECT.COM

A NEW SENIOR WELLNESS CENTER
2829 W. Meighan Boulevard
for the
City of Gadsden, Alabama

KEYED NOTES

1. ATTIC VENTILATION FAN ON ROOF. FULL SIZE CONNECTION DOWN THRU ROOF AND OPEN TO ATTIC. WITH THERMOSTAT IN ATTIC.

HVAC - ROOF PLAN
1/8" = 1'-0"

PLAN NORTH

DRAWN	RBG
CHECKED	JWS
SCALE	AS NOTED
DATE	09/15/2022
FILE	
JOB NO.	22-01
REVISIONS	

SHEET M1.2 OF XX NUMBER

Dewberry | EDMONDS
2 Riverchase Office Plaza
Suite 205
Hoover, AL 35244
(205) 988-2069
www.dewberry.com
Project Number :
50155636

STATE OF ALABAMA
No. 24747
PROFESSIONAL
09-15-2022
ENGINEER
WADE STEWART

THOMAS M. McELRATH, ARCHITECT
ARCHITECTURE and SPACE PLANNING
717 MERIT SPRINGS ROAD
GADSDEN, ALABAMA 35901
PHONE: (256) 490-8244
EMAIL: TOM@TMM-ARCHITECT.COM

A NEW SENIOR WELLNESS CENTER
2829 W. Meighan Boulevard
for the
City of Gadsden, Alabama

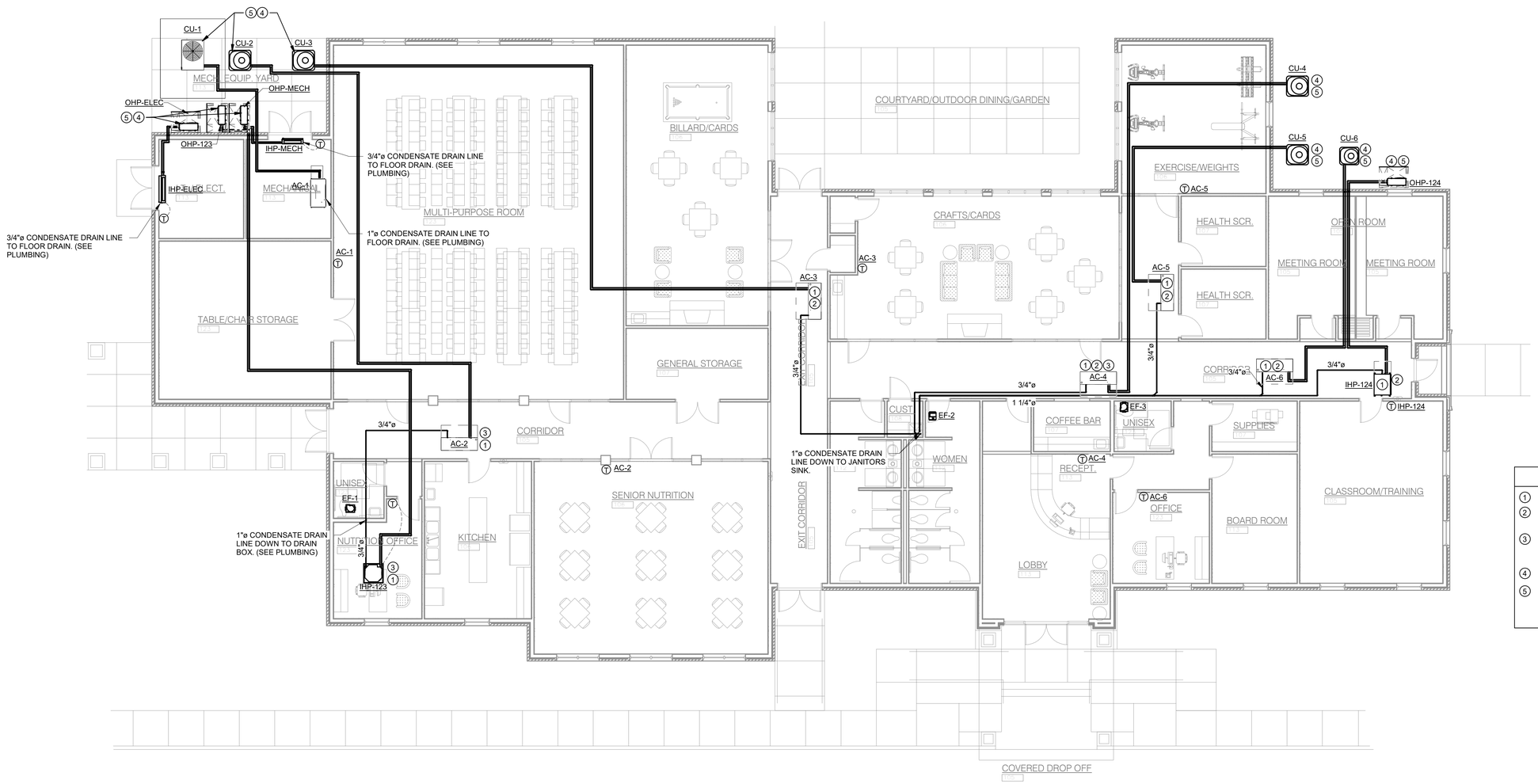

KEYED NOTES	
1	HANG FROM STRUCTURE.
2	ROUTE CONDENSATE DRAIN LINE AS HIGH AS POSSIBLE TO JANITORS SINK.
3	ROUTE CONDENSATE DRAIN LINES AS HIGH AS POSSIBLE TO DRAIN BOX (SEE PLUMBING).
4	PROVIDE 4" CONCRETE PAD.
5	ROUTE INSULATED REFRIGERANT LINES UP IN EXTERIOR WALL & TO INDOOR UNITS. SIZE LINES PER MANUFACTURER'S RECOMMENDATIONS.

PLAN NORTH

PIPING - FLOOR PLAN
1/8" = 1'-0"

DRAWN	RBG
CHECKED	JWS
SCALE	AS NOTED
DATE	09/15/2022
FILE	
JOB NO.	22-01
REVISIONS	

SHEET
M2.1
OF
XX
NUMBER

EE Group Inc.
gadsden
TEL: (256)413-7717
FAX: (256)413-7769
WEB: WWW.EEGRPINC.COM
Job No. 4800
Plot Date: Sep 15, 2022 11:01:21 am

LIGHTING

- SURFACE OR RECESSED CEILING OUTLET – FIXTURE TYPE '#'
- CEILING OUTLET – FIXTURE SINGLE OR CONTINUOUS LENGTHS
- CEILING OUTLET – FIXTURE SINGLE OR CONTINUOUS LENGTHS CONNECTED TO EMERGENCY INVERTER OR INTEGRAL BATTERY.
- CEILING OUTLET – FIXTURE SINGLE OR CONTINUOUS LENGTHS
- CEILING OUTLET – FIXTURE SINGLE OR CONTINUOUS LENGTHS CONNECTED TO EMERGENCY INVERTER OR INTEGRAL BATTERY.
- SINGLE SIDE EXIT SIGN – WITH DIRECTIONAL CHEVRONS AS SHOWN. BATTERY BACK UP
- DOUBLE SIDE EXIT SIGN – WITH DIRECTIONAL CHEVRONS AS SHOWN. BATTERY BACK UP
- CEILING OR WALL MOUNTED EMERGENCY LIGHT, BATTERY BACKUP.
- SITE POLE – POLE MOUNTED
- $ 1–POLE, 20A, 125/277V, SEE SPECIFICATIONS.

POWER

- POWER PANEL – SEE SCHEDULE AND SPECIFICATIONS
- RECESSED MOUNTED POWER PANEL – SEE SCHEDULE AND SPECIFICATIONS, PROVIDE 4 EA. 1" EMPTY CONDUIT TO ABOVE CEILING FOR FUTURE USE.
- T TRANSFORMER – SEE SCHEDULE AND SPECIFICATIONS, 80°C RISE, FLOOR MOUNTED ON FACTORY SPRING VIBRATION.
- HP MOTOR–HORSEPOWER AS SHOWN (HP) HORSEPOWER (TYPICAL)
- F FAN – CEILING/INLINE/ROOF MOUNTED EXHAUST FAN
- P.O. FUSIBLE PULLOUT TYPE DISCONNECT SWITCH – SEE SPECIFICATIONS FOR IDENTIFICATION.
- FUSED DISCONNECT SWITCH – 600V – HEAVY DUTY TYPE, RATING AND ENCLOSURE AS SHOWN. SEE SPECIFICATIONS FOR IDENTIFICATION. FURNISH AND INSTALL NAME PLATES PER DETAIL. FUSE PER EQUIPMENT MANUFACTURER.
- NON–FUSED DISCONNECT SWITCH – 600V – HEAVY DUTY TYPE, RATING AND ENCLOSURE AS SHOWN. SEE SPECIFICATIONS FOR IDENTIFICATION. FURNISH AND INSTALL NAME PLATES PER DETAIL.
- CIRCUIT BREAKER WITH ENCLOSURE (BREAKER SIZE AS INDICATED) – 600V – RATING AND ENCLOUSURE AS SHOWN – SEE SPECIFICATIONS. FOR IDENTIFICATION. FURNISH AND INSTALL NAMEPLATES PER DETAIL.
- $M MANUAL MOTOR STARTER – HORSEPOWER RATED, WITH THERMAL OVERLOAD UNITS AND ENCLOSURE CONSISTENT WITH ENVIRONMENT.
- VARIABLE FREQUENCY DRIVE FURNISHED BY MECHANICAL – SEE PLANS
- HD HAND DRYER, EXCEL MODEL# XLERATOR OR MACHFLOW MODEL# M09**–UL (OR PRE–APPROVED EQUAL), 120 VAC, STAINLESS STEEL FINISH, MOUNTED ON 4" SQUARE BOX WITH SINGLE GANG RAISED COVER HEIGHT PER ADAAG LATEST EDITION.
- STUB UP TO PRE–WIRED FURNITURE. CONCEAL CONDUCTORS IN CHASE OF FURNITURE. COORDINATE WITH APPROVED FURNITURE SUBMITTALS PRIOR TO ANY/ALL ROUGHING.
- JUNCTION BOX WITH FLEXIBLE CONNECTION TO EQUIPMENT. SEE PLANS.
- CEILING MOUNTED JUNCTION BOX. SEE PLANS.
- WALL MOUNTED JUNCTION BOX. SEE PLANS.
- EMERGENCY GAS SHUT–OFF, SEE PLANS AND DETAILS.
- DC JUNCTION BOX WITH FLEXIBLE CONNECTION TO DOOR CONTROLLER OR MOTORED DOOR OPERATOR; 120V
- 10 HOMERUN TO PANELBOARD – #10 AWG WIRE WITH NEC CODE AND CONDUIT PER NEC FILL.
- HOMERUN TO PANELBOARD – ANY CIRCUIT WITHOUT FURTHER DESIGNATION IS 2 NO. 12, 1#12 GRN, 3/4" C. 4 NO. 12, 1#12 GRN, 3/4" C. 6 NO. 12, 1#12 GRN, 3/4" C. AS PER N.E.C.
- BRANCH CIRCUIT – ROUTED ABOVE CEILING OR IN WALL (SEE SPECIFICATIONS)
- BRANCH CIRCUIT – ROUTED IN FLOOR (SEE SPECIFICATIONS)
- BRANCH CIRCUIT – EXPOSED (SEE SPECIFICATIONS).
- E EMPTY CONDUIT WITH NO. 14 IRON FISH WIRE
- FEEDER – OVERHEAD
- FEEDER – UNDERGROUND

RECEPTACLES

- DUPLEX RECEPTACLE, NEMA 5–20R, SEE SPECIFICATIONS.
- DUPLEX RECEPTACLE, NEMA 5–20R, SEE SPECIFICATIONS. COORDINATE MOUNTING HEIGHTS WITH ARCHITECT PRIOR TO ROUGHING.
- WP GFI DUPLEX RECEPTACLE, NEMA 5–20R, WR GROUND FAULT INTERRUPTER IN METAL BOX WITH METAL IN–USE TYPE COVER
- USB DUPLEX RECEPTACLE, 15A., 125V., 2 POLE, 3W., NEMA 5–15R, WITH TWO USB CHARGING PORTS, HUBBELL #USB15X.
- GFI DUPLEX RECEPTACLE, NEMA 5–20R, SELF TEST GROUND FAULT INTERRUPTER, FEED–THRU.
- QUADRAPLEX, NEMA 5–20R WITH SINGLE PLATE.
- QUADRAPLEX, NEMA 5–20R WITH SINGLE PLATE. COORDINATE MOUNTING HEIGHTS WITH ARCHITECT PRIOR TO ROUGHING.
- WALL OUTLET – SINGLE OUTLET, SEE PLANS FOR NEMA CONFIGURATION. VERIFY NEMA CONFIGURATION WITH OWNER PRIOR TO ANY/ALL ORDERING.
- UF WALL OUTLET – NEMA 5–20R, CONNECTION FOR UNDER COUNTER REFRIGERATOR, COORDINATE MOUNTING HEIGHT WITH ARCHITECTURAL ELEVATIONS.

AUXILIARY

- DATA OUTLET (NUMBER OF DATA AS INDICATED) – WALL MOUNTED – SEE DETAIL
- AC DATA OUTLET (NUMBER OF DATA AS INDICATED) – WALL MOUNTED – SEE DETAIL. COORDINATE MOUNTING HEIGHTS WITH ARCHITECT PRIOR TO ROUGHING.
- E EMPTY AUXILIARY OUTLET – WALL MOUNTED – SEE DETAIL
- WAP DATA OUTLET (FOR WIRELESS ACCESS POINT) – SEE DETAIL
- TV WALL–MOUNTED DISPLAY LOCATION. VERIFY HEIGHT WITH ARCHITECTURAL ELEVATIONS PRIOR TO ANY ROUGH–IN. FURNISH AND INSTALL ONE (1) EACH FLUSH MOUNTED SINGLE GANG BOX. FURNISH AND INSTALL SINGLE GANG FACEPLATE WITH TWO (2) EACH RJ45 JACKS AND ONE (1) EACH 'F' CONNECTOR. ROUTE TWO (2) EACH CAT6 CABLES AND ONE (1) EACH RG6 CABLE (IN 1"C) FROM OUTLET TO NEAREST CABLE TRAY/ AUXILIARY BACKBOARD. TERMINATE CAT6 CABLES ON PATCH PANES AS REQUIRED. PIGTAIL COAX FOR CONNECTION TO SPLITTER.
- SLEEVE SIZE / SLEEVE QUANTITY #/# CONDUIT SLEEVE FOR LOW–VOLTAGE CABLING. FIRST NUMBER INDICATES SLEEVE QUANTITY, SECOND NUMBER INDICATES SLEEVE SIZE. ALL FIRE RATED PENETRATIONS SHOWN WITH 2" OR 4" SLEEVES SHALL INCLUDE WIREMOLD FLAMESTOPPER. CAULK, WOOL AND PUTTY WILL NOT BE ACCEPTABLE FIRE RATED SEALS FOR 2" AND 4" SLEEVES
- —CT— WIRE BASKET CABLE TRAY SHALL BE CABLOFIL# CF105/ 150 6"W, 4"D AND SHALL BE CENTER HUNG. INCLUDE ALL HARDWARE AS REQUIRED FOR MOUNTING.
- CR ACCESS CONTROL DOOR CARD READER. FURNISH AND INSTALL SURFACE MOUNTED CARD READER (ISONAS# RC–04) ON NON–SECURE SIDE OF DOOR AND CONNECT TO ACCESS CONTROL SYSTEM AS REQUIRED. FURNISH AND INSTALL ONE EACH CAT6 CABLE IN 1"C FROM READER TO BB113. COORDINATE WITH DOOR HARDWARE AND CONNECT TO ACCESS CONTROL SYSTEM AS REQUIRED FOR DOOR RELEASE. SEE PLANS, SPECS AND GENERAL NOTES. CABLING TO BE ROUTED IN CONDUIT IN NEW WALL OF MECHANICAL ROOM. EQUIPMENT TO BE INSTALLED AND CONNECTED BY MANUFACTURER'S CERTIFIED CONTRACTOR AND PER MANUFACTURER'S RECOMMENDATIONS.
- DM DOOR MONITOR. FURNISH AND INSTALL DOOR CONTACTS (SECURITRON# DPS–=M–BK) AT DOOR AND CONNECT TO ACCESS CONTROL SYSTEM AS REQUIRED. EACH INDIVIDUAL DOOR CONTACT SHALL BE CONNECTED TO A DEDICATED INPUT AT THE ACCESS CONTROL PANEL. SEE PLANS, SPECS AND GENERAL NOTES.
- HO HANDICAP DOOR OPERATOR FURNISHED AND INSTALLED BY OTHERS WITH FINAL CONNECTIONS BY ELECTRICAL CONTRACTOR. POWER FOR OPERATOR TO BE SWITCHED BY "HS". SEE "HS" IN LEGEND.
- HS HANDICAP DOOR OPERATOR SWITCH. FURNISH AND INSTALL FLUSH MOUNTED 4" SQUARE BOX WITH SINGLE GANG RAISED COVER AND MOTOR RATED SWITCH. 120V POWER FOR DOOR OPERATOR "HO" TO BE CONTROLLED BY MOTOR RATED SWITCH. PROVIDE ENGRAVED FACEPLATE INDICATING "ON", "OFF" AND LOAD SERVED. VERIFY EXACT LOCATION WITH OWNER/ ARCHITECT PRIOR TO ANY ROUGH–IN.
- SB WIRELESS PUSHBUTTON FOR HANDICAP DOOR OPERATOR (SECURE SIDE OF DOOR). FURNISH AND INSTALL FLUSH MOUNTED 4" SQUARE BOX WITH PLASTER RING AS REQUIRED. PUSHBUTTON TO BE FURNISHED AND INSTALLED BY OTHERS.
- NB WIRELESS PUSHBUTTON FOR HANDICAP DOOR OPERATOR (NON–SECURE SIDE OF DOOR). FURNISH AND INSTALL FLUSH MOUNTED 4" SQUARE BOX WITH PLASTER RING AS REQUIRED. PUSHBUTTON TO BE FURNISHED AND INSTALLED BY OTHERS.
- RB REMOTE RELEASE PUSHBUTTON FOR DOOR LOCK REMOTE RELEASE. FURNISH AND INSTALL FLUSH MOUNTED 4" SQUARE BOX WITH SINGLE–GANG PLASTER RING AND PUSHBUTTON FOR REMOTE DOOR RELEASE. PROVIDE ENGRAVED PLATE INDICATING CONTROL FUNCTION. VERIFY LOCATION AND MOUNTING TYPE WITH OWNER/ ARCHITECT PRIOR TO ROUGH–IN. CONNECT BUTTON TO ACCESS CONTROL SYSTEM AS REQUIRED TO RELEASE DOOR NOTED WITH "RR". SEE "RR" IN LEGEND.
- RR REMOTE RELEASE FOR DOOR LOCK. CONNECT BUTTON TO ACCESS CONTROL SYSTEM AS REQUIRED TO RELEASE DOOR NOTED WITH DEPRESSION OF "RB" BUTTON. SEE "RB" IN LEGEND.
- CC VIDEO SURVEILLANCE CAMERA – CEILING MOUNTED SEE DETAILS
- CW VIDEO SURVEILLANCE CAMERA – WALL MOUNTED SEE DETAILS

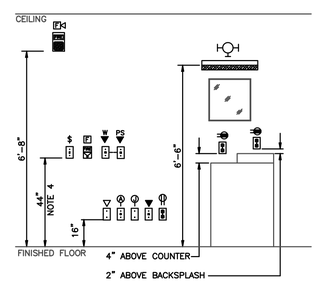

TYPICAL MOUNTING HEIGHTS

NOT TO SCALE

NOTES:

1. INDICATED MOUNTING HEIGHTS ARE FROM FINISHED FLOOR TO BOTTOM OF OUTLET BOX, UNLESS OTHERWISE NOTED.
2. REFER TO ARCHITECTURAL DETAILS FOR ADDITIONAL REQUIREMENTS.
3. INSTALL OUTLETS THAT ARE IN CLOSE PROXIMITY ON THE SAME CENTERLINE.
4. INDICATED DEVICES MOUNTED IN A BLOCK WALL SHALL BE 4'–0" TO TOP OF COVER PLATE.

FIRE ALARM

- FACP FIRE ALARM CONTROL PANEL – NOTIFIER NFS320E INTELLIGENT ADDRESSABLE FIRE DETECTION CONTROL PANEL WITH STAND–BY BATTERY SURFACE MOUNTED AT 5'–0" TO CENTERLINE
  - * FURNISH AND INSTALL INTEGRAL VOICE EVACUATION
  - ** PROVIDE FACTORY INSTALLED BATTERY BACKUP AND FACTORY INSTALLED SURGE SUPPRESSION DEVICE IN FACP.
  - *** CONTRACTOR SHALL PROVIDE COMPLETE, INDEPENDENT 2EA. CAT5E TELEPHONE LINE FROM AUXILIARY BACKBOARD/ MDF: BB1 TO FIRE ALARM CONTROL PANEL. CAT5E SHALL BE ROUTED IN 3/4" EMT CONDUIT FROM POINT "A" TO POINT "B" AND TERMINATED AS REQUIRED BY FIRE ALARM TECHNICIAN.
  - **** FURNISH AND INSTALL INTEGRAL WEB SERVER ACCESS CARD.
  - ***** FURNISH AND INSTALL POINT ID CELLULAR DIALER FOR PRIMARY AND BACK–UP AT FACP.
- FAA REMOTE FIRE ALARM ANNUNCIATOR PANEL – NOTIFIER AFP100 IN FLUSH MOUNTED SERIES BOX. PROVIDE REMOTE MICROPHONE ADJACENT TO ANNUNCIATOR IN SAME FLUSH MOUNTED BOX.
- F MANUAL PULL STATION – EDWARDS MODEL E85001–0279 W/ FLUSH MOUNTED BACKBOX (4" SQUARE BOX WITH SINGLE GANG RAISED COVER) MOUNTED ⊕ + 44" A.F.F. TO BOTTOM.
- F FIRE ALARM STROBE – EDWARDS MODEL GCF–VM – CEILING MOUNTED ON FLUSH 4" SQUARE BOX WITH 1–1/2" EXTENSION RING
- F FIRE ALARM SPEAKER STROBE – EDWARDS MODEL GCF–52VM – CEILING MOUNTED ON FLUSH 4" SQUARE BOX WITH 1–1/2" EXTENSION RING
- WP F WEATHERPROOF FIRE ALARM HORN STROBE – EDWARDS MODEL 4WGWF–SVMC – WALL MOUNTED ON FLUSH 4" SQUARE BOX ⊕ +144 INCHES (12') AFG
- SMOKE DETECTOR – EDWARDS MODEL E85001–0651 – WITH BASE/CEILING MOUNTED ON FLUSH 4" SQUARE BOX
- DD–S DD–R DUCT DETECTOR (S=SUPPLY AIR – R= RETURN AIR) – EDWARDS MODEL E85001–0584 W/ SAMPLING TUBE & RELAY FURNISHED BY FIRE ALARM CONTRACTOR, INSTALLED IN DUCT BY MECHANICAL, FINAL CONNECTIONS BY FIRE ALARM CONTRACTOR.
- HEAT DETECTOR – EDWARDS MODEL E85001–0620 – WITH BASE/CEILING MOUNTED ON FLUSH 4" SQUARE BOX
- FS FLOW SWITCH MONITOR MODULE – EDWARDS MODEL GSA–CT1. FLOW SWITCH FURNISHED AND INSTALLED BY OTHERS, MODULE FURNISHED AND INSTALLED BY FIRE ALARM CONTRACTOR. CONNECT TO FACP AS A SEPARATE ZONE.
- TS TAMPER SWITCH MONITOR MODULE – EDWARDS MODEL GSA–CT1 TAMPER SWITCH FURNISHED AND INSTALLED BY OTHERS, MODULE FURNISHED AND INSTALLED BY FIRE ALARM CONTRACTOR. CONNECT TO FACP AS REQUIRED.
- RT REMOTE TEST STATION (KEY OPERATED) – KEY BOX TYPE, FLUSH MOUNTED, HEIGHT CONDUIT AND WIRE TO DUCT DETECTOR AS REQUIRED. PROVIDE FINAL CONNECTIONS AS REQUIRED
- WG WIRE GUARD W/ TAMPER PROOF SCREWS – REQUIRED IN GYM, AUXILIARY GYM, AND WHERE SHOWN
- F FIRE ALARM CONDUIT & WIRE – SEE FIRE SYSTEM NOTES.
- M Z ZAM – ZONE ADDRESSABLE MODULE, MONITOR (INPUT TO FIRE ALARM PANEL FROM A DEVICE OR SYSTEM)
- C Z ZAM – ZONE ADDRESSABLE MODULE, CONTROL (OUTPUT FROM FIRE ALARM PANEL TO A DEVICE OR SYSTEM)
- R INTERPOSING RELAY FOR USE WITH CONTROL ZAM, 20 AMP CONTACTS

FIRE ALARM SYSTEM NOTES

1. FIRE ALARM CONTRACTOR TO INCLUDE IN BID PRICE REQUIRED PROGRAMMING SERVICES SUCH THAT THE FINAL ROOM NUMBERS (PER THE APPROVED OWNERS SIGNAGE SCHEME) FOR EACH F.A. SYSTEM DEVICE SUCH THAT ALARMS AND DEVICE LOCATIONS MATCH BUILDING SIGNAGE.
2. FIRE ALARM SUB–CONTRACTOR TO FURNISH POINT TO POINT WIRING DIAGRAM BY THE FIRE ALARM MANUFACTURER WITH FIRE ALARM SYSTEM SUBMITTALS. POINT TO POINT WIRING DIAGRAMS SHALL INCLUDE ALL WIRING INFORMATION AND CONDUIT SIZES. REQUIRED WIRING DIAGRAMS SHALL BE FURNISHED WITH THE ELECTRICAL SUBMITTAL PACKAGE, SUBMITTAL PACKAGES WITHOUT THESE DRAWINGS AND THE REQUIRED MAINTENANCE AND EXPANSION INFORMATION (SEE SPECIFICATIONS) WILL NOT BE ACCEPTED.
3. ELECTRICAL CONTRACTOR SHALL COORDINATE ALL WIRING REQUIREMENTS WITH THE FIRE ALARM SYSTEM SUBCONTRACTOR PRIOR TO BIDDING AND/OR ROUGHING. FURNISH AND INSTALL ALL REQUIRED 120V. CIRCUITS FOR AMPLIFIERS, FIELD CHARGING PANELS, RELAY PANELS, ETC..
4. ALL FIRE ALARM CABLING SHALL BE INSTALLED CONCEALED IN CONDUIT, 3/4" MINIMUM (NO EXCEPTIONS). ALL FIRE ALARM CONDUITS SHALL BE RED TRUE COLOR EMT AS MANUFACTURED BY ALLIED TUBE AND CONDUIT.
5. FIRE ALARM SYSTEM CONTRACTOR SHALL FURNISH AND INSTALL REMOTE TEST STATION(S) FOR ALL DUCT MOUNTED SMOKE DETECTORS. THESE STATIONS SHALL BE LABELED WITH THE DEVICE NUMBER AND THE UNIT NUMBER. THE REMOTE TEST STATION(S) SHALL BE LOCATED IN AN ACCESSIBLE LOCATION.
6. THE ELECTRICAL CONTRACTOR SHALL COORDINATE LOCATIONS FOR ALL FIRE PROTECTION SYSTEM VALVES WITH THE FINAL FIRE PROTECTION SYSTEM PLANS PRIOR TO BIDDING AND/OR ROUGHING. AT EACH CONTROL VALVE, THE CONTRACTOR SHALL PROVIDE FIRE ALARM SYSTEM CONNECTIONS TO THE FLOW AND TAMPER SWITCHES (FURNISHED AND INSTALLED BY OTHERS).
7. DUCT MOUNTED SMOKE DETECTORS FURNISHED BY THE ELECTRICAL CONTRACTOR. AND INSTALLED BY THE MECHANICAL CONTRACTOR LOCATIONS SHOWN ARE FOR REFERENCE ONLY. COORDINATE EXACT LOCATION WITH THE MECHANICAL PLANS AND FINAL CONNECTIONS BY FIRE ALARM CONTRACTOR. PROVIDE ALL EQUIPMENT REQUIRED FOR SHUTDOWN OF THE UNITS BY THE FIRE ALARM CONTROL PANEL AS REQUIRED.
8. CONTRACTOR SHALL PROVIDE WITH THE FIRE ALARM SUBMITTAL PACKAGE THE FOLLOWING INFORMATION PER IBC 2015:
   - COPY OF STATE OF ALABAMA FIRE ALARM CONTRACTOR LICENSE/PERMIT
   - LOCATION OF ALARM INITIATING DEVICES
   - CONDUCTOR TYPES AND SIZES AND TERMINATING EQUIPMENT
   - MODEL NUMBERS AND LISTING INFORMATION FOR EQUIPMENT DEVICES AND MATERIALS
9. THE NEW FIRE ALARM SYSTEMS WILL COMPLY WITH THE REQUIREMENTS OF THE FOLLOWING CODES:
   - INTERNATIONAL BUILDING CODE 2015
   - INTERNATIONAL FIRE CODE 2015
   - NFPA 72 2013
   - ALL REQUIREMENTS OF THE AUTHORITY HAVING JURISDICTION
10. THE CERTIFIED FIRE ALARM ACT REQUIRES THAT EVERY BUSINESS WHO INSTALLS FIRE ALARM SYSTEMS IN COMMERCIAL OCCUPANCIES MUST BE LICENSED AS A CERTIFIED FIRE ALARM CONTRACTOR. THE CONTRACTOR MUST HAVE A NICET LEVEL III TECHNICIAN IN A POSITION OF RESPONSIBILITY, AND THE LICENSE WILL BE ISSUED IN THE NAME OF THE CERTIFICATE HOLDER AND THE CONTRACTOR. THE CERTIFIED FIRE ALARM ACT ALSO REQUIRES THAT TECHNICIANS WORKING FOR THE CERTIFIED CONTRACTOR MUST HOLD A CURRENT NICET LEVEL II, OR EQUIVALENT, CERTIFICATION. CONTRACTORS TO SHOW EVIDENCE WITH SUBMITTAL PACKAGE THAT HE/SHE MEETS THE CERTIFICATION REQUIREMENTS OF THE ACT AND HOLDS A PERMIT ISSUED BY THE STATE FIRE MARSHALL.
11. THE FIRE DETECTION AND ALARM SYSTEM CONTROLS CONTRACTOR SHALL HOLD A PERMIT FROM THE ALABAMA STATE FIRE MARSHAL. THE FIRE ALARM SYSTEM CONTRACTOR SHALL PROVIDE A COPY OF THE STATE FIRE MARSHAL'S PERMIT TO THE GENERAL CONTRACTOR SO THAT THE ENGINEER MAY REVIEW THE CONTRACTOR'S QUALIFICATIONS PRIOR TO ANY WORK TAKING PLACE. SEE SPECIFICATIONS SECTION 28652OA, APPENDIX FOR COPY OF STATE REQUIREMENTS FOR FIRE ALARM CONTRACTORS DESIRING TO BID THIS PROJECT.

SPECIAL FIRE ALARM NOTE:

NEW FIRE ALARM SYSTEM (FIRE ALARM CONTROL PANEL, FIRE ALARM DEVICES, FIRE ALARM CABLING, FIRE ALARM SYSTEM SET–UP AND PROGRAMMING) TO BE FURNISHED AND INSTALLED BY OWNER'S STATE CERTIFIED FIRE ALARM CONTRACTOR, NOT IN CONTRACT. ALL ROUGH–IN FOR NEW FIRE ALARM SYSTEM TO BE FURNISHED AND INSTALLED BY ELECTRICAL CONTRACTOR UNDER PROJECT BID. OWNER'S FIRE ALARM CONTRACTOR TO COORDINATE WITH ELECTRICAL CONTRACTOR FOR ALL ROUGH–IN AND POWER REQUIREMENTS. NEW FIRE ALARM SYSTEM TO BE INSTALLED CONCURRENT WITH OTHER RENOVATION WORK. NEW FIRE ALARM SYSTEM FOR RENOVATED BUILDINGS WILL BE MONITORED SEPARATELY FROM AND OPERATE INDEPENDENTLY OF ANY OTHER FIRE ALARM SYSTEMS ON CAMPUS.

ALABAMA REGISTERED ENGINEER No. 21242 R. MORGAN JR. 9/15/22

THOMAS M. McELRATH, ARCHITECT
ARCHITECTURE and SPACE PLANNING
717 MERIT SPRINGS ROAD
GADSDEN, ALABAMA 35901
PHONE: (256) 490-8244
EMAIL: TOM@TMM-ARCHITECT.COM

A NEW SENIOR WELLNESS CENTER
at
2829 W. Meighan Boulevard
for
THE CITY of GADSDEN, ALABAMA

ELECTRICAL LEGEND

DRAWN	
CHECKED	
SCALE	AS NOTED
DATE	SEPTEMBER 15, 2022
FILE	
JOB NO.	22–01
REVISIONS	

SHEET E0.1 OF 9 SHEETS

LUMINAIRE SCHEDULE

TYPE	MANUFACTURER	CATALOG NUMBER	LAMPS			MOUNTING		REMARKS	EQUALS
			# LAMPS	LUMENS/WATTS	TYPE	TYPE	RECESS DEPTH		
LA2	ACUITY BRANDS	CPX 2X2 ALO7 SWW6	1	3356L/29W (NOMINAL)	LED	RECESSED	3-1/4"	2X2 RECESSED FLAT PANEL, WITH 0-10V DIMMING. COORDINATE CEILING TYPE WITH ARCHITECT.	OR PRIOR APPROVED EQUAL
L2	ACUITY BRANDS	CPX 2X2 ALO7 SWW7	1	3356L/29W (NOMINAL)	LED	RECESSED	3-1/4"	2X2 RECESSED FLAT PANEL, WITH 0-10V DIMMING. COORDINATE CEILING TYPE WITH ARCHITECT.	OR PRIOR APPROVED EQUAL
L2E	ACUITY BRANDS	CPX 2X2 ALO7 SWW7 ILBLP CP10 HE SD A	1	3356L/29W (NOMINAL)	LED	RECESSED	3-1/4"	2X2 RECESSED FLAT PANEL, WITH 0-10V DIMMING. FIXTURE FURNISHED WITH INTEGRAL BATTERY. COORDINATE CEILING TYPE WITH ARCHITECT.	OR PRIOR APPROVED EQUAL
L4	ACUITY BRANDS	CPX 2X4 ALO8 SWW7	1	6050L/50W (NOMINAL)	LED	RECESSED	3-1/4"	2X4 RECESSED FLAT PANEL,WITH 0-10V DIMMING. COORDINATE CEILING TYPE WITH ARCHITECT.	OR PRIOR APPROVED EQUAL
L4E	ACUITY BRANDS	CPX 2X4 ALO8 SWW7 ILBLP CP10 HE SD A	1	4469L/36W (NOMINAL)	LED	RECESSED	3-1/4"	2X4 RECESSED FLAT PANEL, WITH 0-10V DIMMING. FIXTURE FURNISHED WITH INTEGRAL BATTERY. COORDINATE CEILING TYPE WITH ARCHITECT.	OR PRIOR APPROVED EQUAL
LA4	ACUITY BRANDS	2BLT4 72L ADP LP835 MVOLT GZ10	1	7200L/53W (NOMINAL)	LED	RECESSED	3-1/4"	2X4 RECESSED VOLUMETERIC, WITH 0-10V DIMMING. FIXTURE FURNISHED WITH INTEGRAL BATTERY. COORDINATE CEILING TYPE WITH ARCHITECT.	OR PRIOR APPROVED EQUAL
LA4E	ACUITY BRANDS	2BLT4 72L ADP LP835 MVOLT GZ10 EL14L	1	7200L/53W (NOMINAL)	LED	RECESSED	3-1/4"	2X4 RECESSED VOLUMETERIC, WITH 0-10V DIMMING. FIXTURE FURNISHED WITH INTEGRAL BATTERY. COORDINATE CEILING TYPE WITH ARCHITECT.	OR PRIOR APPROVED EQUAL
LS4	ACUITY BRANDS	CLX L48 3000LM SEF RDL WD MVOLT GZ10	1	3000L/30W (NOMINAL)	LED	SURFACE	----	4FT STRIP FIXTURE, LENSED, WITH 0-10V DIMMING. COORDINATE CEILING TYPE WITH ARCHITECT.	OR PRIOR APPROVED EQUAL
C6H	ACUITY BRANDS	LDN6 35/30 L06AR LSS MVOLT GZ10	1	3000L/35W (NOMINAL)	LED	RECESSED	6-1/2"	6" DIA RECESSED DOWNLIGHT, WITH 0-10V DIMMING. COORDINATE CEILING TYPE WITH ARCHITECT.	OR PRIOR APPROVED EQUAL
C6HE	ACUITY BRANDS	LDN6 35/30 L06AR LSS MVOLT GZ10 EL	1	3000L/35W (NOMINAL)	LED	RECESSED	6-1/2"	6" DIA RECESSED DOWNLIGHT, WITH 0-10V DIMMING AND INTERGAL EMERGENCY BATTERY. COORDINATE CEILING TYPE WITH ARCHITECT.	OR PRIOR APPROVED EQUAL
C8	ACUITY BRANDS	LDN8 40/80 L08AR LSS MVOLT GZ10 WL	1	8000L/92W (NOMINAL)	LED	RECESSED	13"	8" DIA RECESSED DOWNLIGHT, WITH 0-10V DIMMING. COORDINATE CEILING TYPE WITH ARCHITECT.	OR PRIOR APPROVED EQUAL
L6	ACUITY BRANDS	SL2L LOP 6 FLP XX 80CRI 35K 600LMF MIN10 120 ZT	1	3389L/35W (NOMINAL)	LED	RECESSED	4-3/8"	6FT RECESSED SLOT FIXTURE, LENSED, WITH 0-10V DIMMING. COORDINATE CEILING TYPE WITH ARCHITECT.	OR PRIOR APPROVED EQUAL
L6E	ACUITY BRANDS	SL2L LOP 6 FLP XX 80CRI 35K 600LMF MIN10 120 ZT E10WLCP	1	3389L/35W (NOMINAL)	LED	RECESSED	4-3/8"	6FT RECESSED SLOT FIXTURE, LENSED, WITH 0-10V DIMMING. FURNISHED WITH INTEGRAL EMERGENCY BATTERY. COORDINATE CEILING TYPE WITH ARCHITECT.	OR PRIOR APPROVED EQUAL
PT	US ARCHITECTURAL	CMP-VLED-IV-64LED-350mA-NW	1	6771L/69W (NOMINAL)	LED	POLE MOUNTED	----	POST TOP DECORATIVE LED FIXTURE 15'-0" MOUNTING HEIGHT. POLE BASE (SEE DETAIL). POLE SHALL MEET CURRENT IBC WIND LOAD RATING FOR THIS REGION. COLOR/FINISH TO BE SELECTED BY ARCHITECT/OWNER.	OR PRIOR APPROVED EQUAL
WP	US ARCHITECTURAL	RZR-WM1 PLED-IV 40LED 525mA NW 120 XX	1	7556L/65W (NOMINAL)	LED	SURFACE WALL	-----	LED WALL PACK, COLOR/FINISH TO BE SELECTED BY ARCHITECT/OWNER. SEE PLANS FOR MOUNTING HEIGHT.	OR PRIOR APPROVED EQUAL
WPE	US ARCHITECTURAL	RZR-WM1 PLED-IV 40LED 525mA NW 120 XX EM1	1	7556L/65W (NOMINAL)	LED	SURFACE WALL	-----	LED WALL PACK, COLOR/FINISH TO BE SELECTED BY ARCHITECT/OWNER. SEE PLANS FOR MOUNTING HEIGHT. FURNISHED WITH INTEGRAL BATTERY PACK.	OR PRIOR APPROVED EQUAL
PL3HS	US ARCHITECTURAL	RZR PLED III W 80LED 875mA 40K 120 1 XX HS	1	28760L/219W (NOMINAL)	LED	POLE MOUNTED	-----	SINGLE LED HEAD MOUNTED 30'-0" ABOVE FINISHED GRADE, L.E.D. LUMINAIRE, TYPE 3 WIDE DISTRIBUTION, 4000K, MOUNTED ON CONCRETE BASE (SEE DETAIL). POLE SHALL MEET CURRENT IBC WIND LOAD RATING FOR THIS REGION. COLOR/FINISH TO BE SELECTED BY ARCHITECT/OWNER.	OR PRIOR APPROVED EQUAL
PL32HS	US ARCHITECTURAL	RZR PLED III W 80LED 875mA 40K 120 2-180 XX HS	2	57520L/438W (NOMINAL)	LED	POLE MOUNTED	-----	DUAL LED HEAD MOUNTED 30'-0" ABOVE FINISHED GRADE, L.E.D. LUMINAIRE, TYPE 3 WIDE DISTRIBUTION, 4000K, MOUNTED ON CONCRETE BASE (SEE DETAIL). POLE SHALL MEET CURRENT IBC WIND LOAD RATING FOR THIS REGION. COLOR/FINISH TO BE SELECTED BY ARCHITECT/OWNER.	OR PRIOR APPROVED EQUAL
FL	ACUITY BRANDS	DSXF1 LED P2 40K HMF MVOLT THK XX	1	4245L/42W (NOMINAL)	LED	STANCHION KNUCKLE	-----	LED FLOOD LIGHT. LIGHTING MANUFACTURER TO PROVIDE PHOTOMETRIC STUDY OF FLOOD LIGHT PRIOR TO ANY/ALL ORDERING. ARCHITECT TO PROVIDE ELEVATIONS OF AREA TO BE ILLUMINATED FOR PHOTOMETRIC STUDY. COLOR/FINISH TO BE SELECTED BY ARCHITECT.	OR PRIOR APPROVED EQUAL
CF	PINNACLE LIGHTING	EX3D BW 840SO XX S U FSD 1 XX	1	3000L/24W (NOMINAL)	LED	SURFACE	-----	LED CANOPY FIXTURE. COORDINATE MOUNTING TYPE WITH ARCHITECTURAL PLANS PRIOR TO ANY/ALL WORK/ROUGHING.	OR PRIOR APPROVED EQUAL
CFE	PINNACLE LIGHTING	EX3D BW 840SO XX S U FSD 1 XX ILL	2	3000L/24W (NOMINAL)	LED	SURFACE	-----	LED CANOPY FIXTURE WITH EMERGENCY BATTERY. COORDINATE MOUNTING TYPE WITH ARCHITECTURAL PLANS PRIOR TO ANY/ALL WORK/ROUGHING.	OR PRIOR APPROVED EQUAL
X1	EMERGI-LITE	PNR6-AD	WITH UNIT			SURFACE WALL/CEILING	----	SINGLE/ DOUBLE FACE UNIVERSAL EDGE LIT EXIT FIXTURE WITH RED LETTERING FURNISHED WITH INTEGRAL BATTERY. PROVIDE UNIVERSAL MOUNTING KIT.	OR PRIOR APPROVED EQUAL
EM1	EMERGI-LITE	EL-2RHL-AD	WITH UNIT			SURFACE WALL/CEILING	----	TWO HEAD LED EMERGENCY FIXTURE.	OR PRIOR APPROVED EQUAL
VF	NUVO	60-6581	1	60W MAX WATTAGE	MED	SURFACE WALL	----	VANITY FIXTURE WITH MEDIUM LAMP BASE. PROVIDE LED EQUIVALENT. VERIFY MOUNTING HEIGHT AND LOCATION WITH ARCHITECT.	OR PRIOR APPROVED EQUAL
SF	PRUDENTIAL LIGHTING	BPRO4-PER-FLSH-LED35-LO-12-**-PFL-LP-SC-** (15W PER 4FT)	1	5967L/45W (NOMINAL)	LED	RECESSED	8"	4" PERIMETER LED. COORDINATE EXACT LENGTH, CEILING TYPE, AND COLOR/FINISH WITH ARCHITECT PRIOR TO ANY/ALL WORK/ORDERING.	OR PRIOR APPROVED EQUAL
S1	LUNA	971LU-84D-35K-120-S-MM-**-**-DIML	1	10743L/118W (NOMINAL)	LED	PENDANT	----	84" DIAMETER LED PENDANT WITH AIR CRAFT CABLE MOUNTING. COORDINATE MOUNTING HEIGHT AND COLOR/FINISH WITH ARCHITECT PRIOR TO ANY/ALL ORDERING/WORK.	OR PRIOR APPROVED EQUAL
PT4	FLUXWERK	PA1-A-B-A-35-**-R4-G-F1-M-**	1	4188L/33W (NOMINAL)	LED	SUSPENED CEILING	----	SUSPENDED RECTANGULAR LED FIXTURE. POOL TABLE LIGHTING. COORDINATE SUSPENSION LENGTH, FIXTURE COLOR/FINISH, AND CEILING TYPE PRIOR TO ANY/ALL ORDERING.	OR PRIOR APPROVED EQUAL

EEGRP JOB# 4800

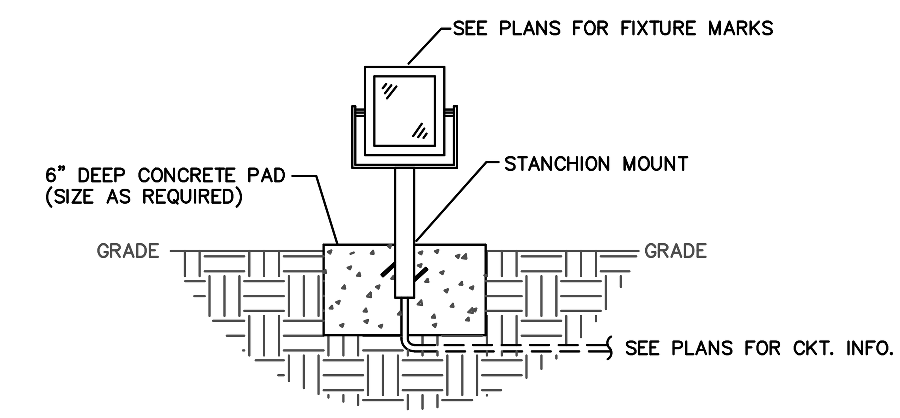

GRADE-MOUNTED FLOOD LIGHTING

NOT TO SCALE   FIXTURE MARK: "FL"

"LCP"

LIGHTING CONTROL PANEL SCHEDULE

PANEL NAME: LCP — LOCATION: IT/ELECTRICAL 123
MOUNTING: SURFACE — PANEL TYPE: SEE NOTES
CONTROL PANEL VOLTAGE: 120V — REMARKS:

RELAY NO.	OVERRIDE SWITCH ZONE	PANEL/ CIRC. NO.	LOAD V.	LOAD AMPS	RELAY CONTROLS	ZONE DESCRIPTION	CYCLE
1		RP1: 40	120V;	20	TIME CLOCK ON/OFF PHOTOCELL	CANOPY LIGHTING	SITE LIGHTING
2		RP1: 41	120V;	20	TIME CLOCK ON/OFF PHOTOCELL	CANOPY LIGHTING	SITE LIGHTING
3		RP1: 42	120V;	20	TIME CLOCK ON/OFF PHOTOCELL	FLOOD LIGHTING	SITE LIGHTING
4		RP2: 1	120V;	20	TIME CLOCK ON/OFF PHOTOCELL	POST TOP LIGHTING	SITE LIGHTING
5		RP2: 6	120V;	20	TIME CLOCK ON/OFF PHOTOCELL	SITE LIGHTING	SITE LIGHTING
6		RP2: 7	120V;	20	TIME CLOCK ON/OFF PHOTOCELL	SITE LIGHTING	SITE LIGHTING
7		RP2: 11	120V;	20	TIME CLOCK ON/OFF PHOTOCELL	BUILDING MOUNTED LIGHTING	SITE LIGHTING
8		RP2: 12	120V;	20	TIME CLOCK ON/OFF PHOTOCELL	BUILDING MOUNTED LIGHTING	SITE LIGHTING
9		RP2: 13	120V;	20	TIME CLOCK ON/OFF PHOTOCELL	BUILDING MOUNTED LIGHTING	SITE LIGHTING
10		RP2: 14	120V;	20	TIME CLOCK ON/OFF PHOTOCELL	BUILDING MOUNTED LIGHTING	SITE LIGHTING
11		RP2: 15	120V;	20	TIME CLOCK ON/OFF PHOTOCELL	SITE LIGHTING	
12		RP2: 16	120V;	20	TIME CLOCK ON/OFF PHOTOCELL	SITE LIGHTING	
13				20		SPARE	
14				20		SPARE	
15				20		SPARE	
16				20		SPARE	

SURFACE MOUNTED LIGHTING CONTROL PANEL, 16 RELAY, SINGLE/DOUBLE POLE CAPACITY, NEMA 1 ENCLOSURE, 0–10V DIMMING, DIGITAL ASTRONOMICAL TIME CLOCK WITH MODEM, DUAL VOLTAGE TRANSFORMER WITH 2 VOLTAGE BARRIERS, REFER TO SCHEDULE FOR NUMBER AND TYPE OF RELAYS. nLIGHT MODEL# ARP INTENCO(#)–MVOLT–2VB–DTC–0–10V DIMMING AS SHOWN OR APPROVED EQUAL.

** COORDINATE WITH OWNER TIMECLOCK PROGRAMMING FOR ALL EXTERIOR LUMINAIRES.
** DIMMING WIRING NOT SHOWN. PROVIDE ALL REQUIRED DIMMING DEVICES REQUIRED TO HAVE A FULLY FUNCTIONING SYSTEM.
** MOUNT PHOTO CELL AS HIGH AS POSSIBLE ON BUILDING EXTERIOR ON NORTH SIDE OF BUILDING.
** INTERCONNECT ALL LIGHTING CONTROL PANELS THIS PROJECT AS REQUIRED PER MANUFACTURERS RECOMMENDATIONS.

EE Group Inc.
gadsden
TEL: (256)413-7717
FAX: (256)413-7789
WEB: WWW.EEGRPINC.COM
Job No. 4800
Plot Date: Sep 15, 2022 1:29:18 pm

ALABAMA REGISTERED No. 21242 ENGINEER JACK R. MORGAN JR. 9/15/22

LIGHTING CONTROL SYSTEMS LEGEND

P2 $ — WALL MOUNTED THREE BUTTON DIGITAL SWITCH, ON/OFF ONLY FOR CONNECTION TO MOTION SENSORS. PROVIDE WALL BOX ADAPTER OPTION
LUTRON MODEL NO. PJ2–2B
OR APPROVED EQUAL

P3 $ — WALL MOUNTED THREE BUTTON DIGITAL SWITCH, ON/OFF, RAISE LOWER, FOR CONNECTION TO MOTION SENSORS. PROVIDE WALL BOX ADAPTER OPTION
LUTRON MODEL NO. PJ2–3BRL
OR APPROVED EQUAL

VS $ — WALL MOUNTED VACANCY SINGLE POLE SWITCH, ON/OFF, RAISE LOWER, 0–10V DIMMING, 8A MAX INPUT LED, 120/277V;
LUTRON MODEL NO. MS–Z101–V–XX
OR APPROVED EQUAL

DT $ — WALL MOUNTED DUAL TECHNOLOGY SINGLE POLE SWITCH, 120/277V;
LUTRON MODEL NO. MS–B102–XX
OR APPROVED EQUAL

OS — CEILING MOUNTED MULTI–TECHNOLOGY OCCUPANCY SENSOR, 360° COVERAGE, LOW VOLTAGE. COORDINATE WITH ARCHITECTURAL DRAWINGS ON CEILING TYPES.
LUTRON MODEL NO. LRF2–OCR2B–P–WH
OR APPROVED EQUAL

VS — CEILING MOUNTED MULTI–TECHNOLOGY VACANCY SENSOR, 360° COVERAGE, LOW VOLTAGE. COORDINATE WITH ARCHITECTURAL DRAWINGS ON CEILING TYPES.
LUTRON MODEL NO. LRF2–VSR2B–P–WH
OR APPROVED EQUAL

HCO M — CEILING MOUNTED WIRELESS HALLWAY OCCUPANCY SENSOR. PROVIDE FLEXIBLE MOUNTING ARM (LRF–ARM–WH)
LUTRON MODEL NO. LRF2–OHLB–P–WH.
OR APPROVED EQUAL

DP — POWER PACK WITH INTEGRAL UL924 RELAY, WITH 0–10V DIMMING, MOUNT ABOVE CEILING WHERE APPLICABLE, 120–277V; 8A OF LIGHTING LOAD PER POWER PACK. PROVIDE NUMBER OF POWER PACKS PER MANUFACTURERS RECOMMENDATIONS.
LUTRON MODEL NO. RMJS–8T–DV–B–EM–CCO
OR APPROVED EQUAL

RP — POWER PACK WITH INTEGRAL UL924 RELAY, WITH NO DIMMING, MOUNT ABOVE CEILING WHERE APPLICABLE, 120–277V; 16A OF LIGHTING LOAD PER POWER PACK. PROVIDE NUMBER OF POWER PACKS PER MANUFACTURERS RECOMMENDATIONS.
LUTRON MODEL NO. RMJS–16R–DV–B–EM–CCO
OR APPROVED EQUAL

LIGHTING CONTROL NOTES

1. ALL SENSOR LOCATIONS ARE APPROXIMATE. REFER TO MANUFACTURER'S INSTALLATION INSTRUCTIONS PRIOR TO INSTALLATION.
2. ULTRASONIC CEILING MOUNT SENSORS SHOULD BE LOCATED A MINIMUM OF SIX (6) FEET FROM HVAC SUPPLY/RETURN VENTS.
3. FIELD VERIFY PROPER SENSITIVITY AND TIME DELAY SETTINGS FOR NON–ADAPTIVE PRODUCTS, FOLLOWING THE MANUFACTURER'S RECOMMENDED PLACEMENT, AND FIELD VERIFICATION OF CIRCUITS WITH RESPECT TO POWER PACK PLACEMENT.
4. CONTRACTOR IS RESPONSIBLE FOR FIELD VERIFICATION OF REQUIRED NUMBER OF POWER PACKS:
   - 4.1. A MINIMUM OF ONE POWER PACK IS REQUIRED FOR EACH CONTROLLED CIRCUIT/ZONE (SEE PLANS).
   - 4.2. EACH POWER PACK CAN SUPPLY UP TO 150mA. REFER TO INSTALLATION GUIDE FOR MAXIMUM NUMBER OR SENSORS CONNECTED TO POWER PACK.
   - 4.3. IF MULTIPLE CIRCUITS ARE TO BE CONTROLLED BY A SINGLE SENSOR, AUXILIARY RELAYS MAY BE USED IN CONJUNCTION WITH A POWER PACK.
5. SENSORS MOUNTED OVER DOORWAYS SHOULD BE PLACED ONE (1) FOOT INSIDE THRESHOLD.
6. THE LIGHTING CONTROL SYSTEM IS DESIGNED AROUND LUTRON LIGHTING CONTROLS AND ALL PRE–APPROVED EQUAL MANUFACTURERS SHALL PROVIDE SITE SPECIFIC INSTALLATION DRAWINGS, CUT SHEETS AND WIRING DIAGRAMS WITH PRE–APPROVAL REQUEST. THE ELECTRICAL CONTRACTOR SHALL BE RESPONSIBLE FOR ANY DEVIATIONS FROM THE SYSTEM IN THE CONTRACT DOCUMENTS. 10 DAY PRIOR APPROVAL ON ALL ALTERNATE MANUFACTURERS IS REQUIRED.
7. THE LIGHTING CONTROL SYSTEM MANUFACTURER SHALL PROVIDE SHOP DRAWINGS AND FACTORY STARTUP.
8. LIGHTING CONTROL MANUFACTURER SHALL INCLUDE IN SUBMITTAL PACKAGE A CONTROL BLOCK DIAGRAM, SPECIFIC SENSOR MOUNTING LOCATIONS, AND CONTROL WIRING CONFIGURATION AS REQUIRED FOR A FULLY FUNCTIONING SYSTEM AS INDICATED ON THE DRAWINGS.

PANELBOARD SCHEDULE

NAME PLATE INFORMATION	MARK	TYPE	MAINS			BRANCHES					MTD.	REMARKS	APPROVED EQUALS	AVAILABLE FAULT CURRENT	SURGE PROTECTION DEVICE
			TYPE	AMPS	SERVICE	1-POLE	2-POLE	3-POLE	SPARES	SPACES					
MP2 120/208V 3P,4W FED FROM UTILITY	MP2	SQUARE 'D' I-LINE HCM 400AMP	MB	400	120/208V 3P,4W	-----	-----	1-30 A, 1-150 A, 2-200 A, 1-250 A,	1-200/3	-----	SURFACE	IT/ELECTRICAL 113	G.E. , SIEMENS, CUTLER HAMMER	22,069	SURGE SUPPRESSION INC. CSEA3Y1-21
MP1 120/208V 3P,4W FED FROM UTILITY	MP1	SQUARE 'D' I-LINE HCM 600AMP	MB	600	120/208V 3P,4W	-----	-----	1-30 A, 2-45 A, 1-125 A, 1-225 A,	1-45/3, -225/3	-----	SURFACE	IT/ELECTRICAL 113	G.E. , SIEMENS, CUTLER HAMMER	27,463	SURGE SUPPRESSION INC. CSEA3Y1-21
RP1 120/208V 3P,4W FED FROM MP2	RP1	SQUARE 'D' NQOD 225AMP	MLO	200	120/208V 3P,4W	36-20 A, 3-20 A GFCI,	-----	1-50 A,	-----	-----	SURFACE	IT/ELECTRICAL 113	G.E. , SIEMENS, CUTLER HAMMER	19,263	NONE
RP2 120/208V 3P,4W FED FROM MP2	RP2	SQUARE 'D' NQOD 225AMP	MLO	200	120/208V 3P,4W	16-20 A,	-----	-----	10-20/1	16-1P	SURFACE	IT/ELECTRICAL 113	G.E. , SIEMENS, CUTLER HAMMER	18,090	NONE
RP3 120/208V 3P,4W FED FROM MP2	RP3	SQUARE 'D' NQOD 400AMP	MLO	250	120/208V 3P,4W	38-20 A, 2-20 A GFCI,	1-20 A, 1-50 A,	2-45 A,	10-20/1	-----	FLUSH	COORODOR , TWO SECTION PANEL 30 POSITIONS EACH PANEL FURNISHED WITH FEED-THRU LUGS	G.E. , SIEMENS, CUTLER HAMMER	7,325	NONE
RPM1 120/208V 3P,4W FED FROM MP1	RPM1	SQUARE 'D' I-LINE HCM 225AMP	MLO	225	120/208V 3P,4W	-----	3-30 A,	2-45 A, 1-125 A,	1-30/2, 1-45/3	3-1P	SURFACE	NEMA 3R	G.E. , SIEMENS, CUTLER HAMMER	18,411	NONE
RPM2 120/208V 3P,4W FED FROM MP2	RPM2	SQUARE 'D' NQOD 225AMP	MLO	150	120/208V 3P,4W	-----	1-25 A, 1-30 A,	2-30 A,	1-30/2, 1-30/3	15-1P	SURFACE	NEMA 3R	G.E. , SIEMENS, CUTLER HAMMER	6,482	NONE

THOMAS M. McELRATH, ARCHITECT
ARCHITECTURE and SPACE PLANNING
717 MERIT SPRINGS ROAD
GADSDEN, ALABAMA 35901
PHONE: (256) 490-8244
EMAIL: TOM@TMM-ARCHITECT.COM

A NEW SENIOR WELLNESS CENTER
at
2829 W. Meighan Boulevard
for
THE CITY of GADSDEN, ALABAMA

ELECTRICAL SCHEDULES AND DETAILS

DRAWN
CHECKED
SCALE AS NOTED
DATE SEPTEMBER 15, 2022
FILE
JOB NO. 22–01
REVISIONS

SHEET E0.2 OF 9 SHEETS

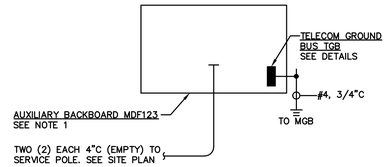

AUXILIARY RISER

SCALE: NOT TO SCALE

AUXILIARY RISER NOTES:

1. AUXILIARY BACKBOARD SHALL BE 4FT WIDE, 8FT HIGH, 3/4" PLYWOOD PAINTED TWO COATS, BOTH SIDES WITH FIRE RETARDANT PAINT. SEE FLOOR PLANS FOR BACKBOARD LOCATION. AT BACKBOARD, FURNISH AND INSTALL ALL EQUIPMENT AS LISTED BELOW/ REQUIRED:

- FURNISH AND INSTALL ONE (1) EACH EQUIPMENT RACK (MIDDLE ATLANTIC# WRK-44-32LRD WITH SEISMIC BRACKETS, LEVELING FEET,
- 24 PORT PATCH PANEL SHALL BE LEVITON# 69586-U24 (24-PORT, CAT6 HIGH-DENSITY PATCH PANEL). PROVIDE QUANTITY AT EACH LOCATION AS REQUIRED FOR ALL HORIZONTAL DATA AND VOICE CABLE TERMINATIONS WITH ADDITIONAL SPACE FOR 10% FUTURE GROWTH. COORDINATE RACK LAYOUT WITH CITY OF MADISON IT DEPARTMENT PRIOR TO ANY WORK.
- 48 PORT PATCH PANEL SHALL BE LEVITON# 69586-U48 (48-PORT, CAT6 HIGH-DENSITY PATCH PANEL). PROVIDE QUANTITY AT EACH LOCATION AS REQUIRED FOR ALL HORIZONTAL DATA AND VOICE CABLE TERMINATIONS WITH ADDITIONAL SPACE FOR 10% FUTURE GROWTH. COORDINATE RACK LAYOUT WITH CITY OF MADISON IT DEPARTMENT PRIOR TO ANY WORK.
- 1 RACK UNIT HORIZONTAL CABLE MANAGER SHALL BE LEVITON# 491RU-HFR. PROVIDE QUANITY AT EACH LOCATION AS REQUIRED FOR ALL HORIZONTAL DATA AND VOICE CABLE TERMINATIONS WITH ADDITIONAL SPACE FOR 10% FUTURE GROWTH. PROVIDE 2 RACK UNITS OF HORIZONTAL CABLE MANAGEMENT PER EACH 24 PATCH OR SWITCH PORTS (ABOVE OR BELOW ASSOCIATED PATCH PANEL). ASSUME 1 SWITCH PORT FOR EACH PATCH PORT.
- 2 RACK UNIT HORIZONTAL CABLE MANAGER SHALL BE LEVITON# 492RU-HFR. PROVIDE QUANITY AT EACH LOCATION AS REQUIRED FOR ALL HORIZONTAL DATA AND VOICE CABLE TERMINATIONS WITH ADDITIONAL SPACE FOR 10% FUTURE GROWTH. PROVIDE 2 RACK UNITS OF HORIZONTAL CABLE MANAGEMENT PER EACH 24 PATCH OR SWITCH PORTS (ABOVE OR BELOW ASSOCIATED PATCH PANEL). ASSUME 1 SWITCH PORT FOR EACH PATCH PORT.
- BLANK FILLER PANEL SHALL BE LEVITON# 49254-BP2, 2 RU./ 49254-BP1, 1 RU. PROVIDE QUANITY AS REQUIRED FOR ALL BLANK SPACES IN CABINET.
- PROVIDE 1 RACK GROUNDING KIT PER RACK AND CONNECT TO TELECOM GROUND BAR.
- PROVIDE 1 RACK GROUND BUS (MIDDLE ATLANTIC# BB-44-1) PER RACK AND CONNECT TO TELECOM GROUND BAR.
- AT EACH CABINET PROVIDE, AT A MINIMUM, THE FOLLOWING ACCESSORIES: COLOR CODED CABLE MANAGEMENT STRAPS (TO COORDINATE COLOR SCHEME WITH OWNER PRIOR TO ORDERING), 24" TUBULAR RUNWAY FOR ALL HORIZONTAL AND BACKBONE ENTRIES INTO RACK, 2 EACH VERTICAL POWER STRIPS (20AMP, 12 POSITION, WITH AMP METER - NO SWITCH), EQUIPMENT GROUND ASSEMBLY AND LADDER RACK SUPPORT.
- FURNISH AND INSTALL ONE (1) EACH UPS (5KVA) BY APC MODEL# APC SMART-UPS ON-LINE RT 5000VA RM 208V TO 208/120V, RACK MOUNT WITH NETWORK CARD (COORDINATE OUTPUT CONFIGURATION WITH UAH IT DEPARTMENT). 1 UPS PER RACK.
- NETWORK SWITCHES TO BE FURNISHED AND INSTALLED BY OWNER
- WIRELESS ACCESS POINTS (WIRELESS ROUTERS) AND THEIR ASSOCIATED CONTROLLERS TO BE FURNISHED AND INSTALLED BY OWNER.

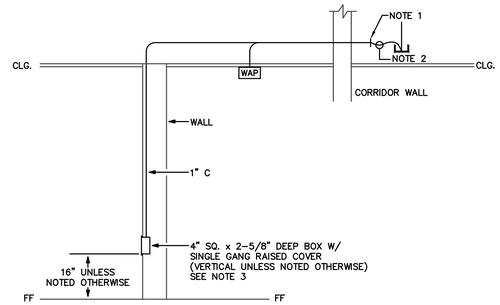

AUXILIARY OUTLET DETAIL

NOT TO SCALE

AUXILIARY OUTLET DETAIL NOTES

1. ROUTE ALL AUXILIARY CONDUITS TO NEAREST CABLE TRAY (SEE PLANS FOR CABLE TRAY LOCATIONS)/ CONDUIT SLEEVE/ AUXILIARY BACKBOARD. TERMINATE CONDUITS WITH SMOOTH BUSHING. LABEL ALL CONDUITS PER SPECIFICATIONS. PROVIDE PULL WIRE IN ALL CONDUITS.
2. ALL DATA/ VOICE CABLES SHALL BE ROUTED TO BACKBOARD MDF123 VIA CONDUIT/ CONDUIT SLEEVES/ CABLE TRAY AND TERMINATED AS DIRECTED BY OWNER. LABEL ALL CABLES PER SPECIFICATIONS. ALL DATA/ VOICE CABLES, BOTH ENDS, SHALL BE LABELED AND TERMINATED PER SPECS/ AS DIRECTED BY OWNER. PROVIDE 10FT SERVICE LOOP ABOVE CEILING AT WORK AREA OUTLET FOR ALL CABLES. NO CABLE SHALL BE UNSUPPORTED FOR A DISTANCE GREATER THAN 3FT.
3. AUXILIARY OUTLETS SHALL BE MOUNTED AT +18" ABOVE FINISHED FLOOR (UNLESS SHOWN OTHERWISE) AND SHALL BE CONFIGURED AS FOLLOWS WITH DEVICE, PLATE AND ICON COLORS AS DIRECTED BY ARCHITECT.

DATA OUTLET (# DATA AS INDICATED) - FLUSH MOUNTED IN 4" SQUARE BOX WITH SINGLE GANG RAISED COVER. FURNISH AND INSTALL CAT6 CONNECTOR (LEVITON# 61110-R*6) WITH DATA ICONS FOR EACH DATA JACK AS INDICATED, ONE EACH UNBREAKABLE NYLON FACEPLATE WITH PORT CAPACITY AS REQUIRED TO PROVIDE ONE FUTURE PORT) WITH ONE EACH BLANK (LEVITON# 41084-B*B). FURNISH AND INSTALL CAT6 PLENUM RATED CABLES (# AS INDICATED FOR DATA) FROM OUTLET TO NEAREST AUXILIARY BACKBOARD VIA CONDUIT, J-HOOKS, SLEEVES AND/ OR CABLE TRAY. ALL CABLES SHALL BE TERMINATED, BOTH ENDS, AS DIRECTED BY OWNER.

WAP — DATA OUTLET (FOR WIRELESS ACCESS POINT) - FLUSH MOUNTED IN 4" SQUARE BOX IN CEILING WITH SINGLE GANG RAISED COVER. FURNISH AND INSTALL TWO EACH CAT6 CONNECTORS (LEVITON# 61110-R*6) WITH DATA ICONS FOR EACH DATA JACK AS INDICATED, ONE EACH UNBREAKABLE NYLON FACEPLATE WITH PORT CAPACITY AS REQUIRED TO PROVIDE ONE FUTURE PORT) WITH ONE EACH BLANK (LEVITON# 41084-B*B). FURNISH AND INSTALL CAT6 PLENUM RATED CABLES FROM OUTLET TO SPECIFIED BACKBOARD (SEE DETAIL NOTE 2) VIA CONDUIT, J-HOOKS, SLEEVES AND/ OR CABLE TRAY. ALL CABLES SHALL BE TERMINATED, BOTH ENDS, AS DIRECTED BY OWNER. PROVIDE A MINIMUM 20FT SERVICE LOOP AT WAP LOCATION COILED ABOVE ACCESSIBLE CEILING.

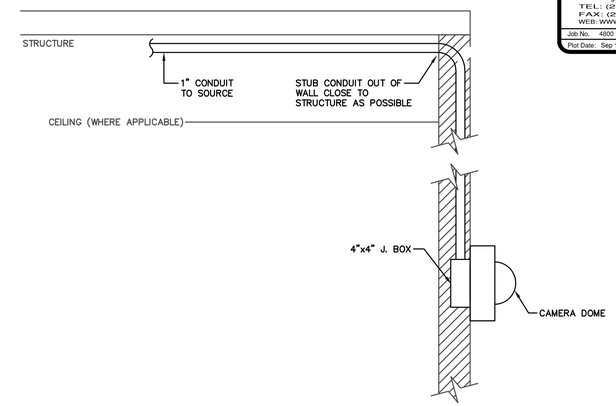

DETAIL: WALL MOUNTED CAMERA , EXTERIOR

NOT TO SCALE

DETAIL NOTES

1. ROUTE ALL AUXILIARY CONDUITS TO NEAREST CABLE TRAY/AUXILIARY BACKBOARD. TERMINATE CONDUITS WITH SMOOTH BUSHING. LABEL ALL CONDUITS PER SPECIFICATIONS. PROVIDE PULL WIRE IN ALL CONDUITS.
2. ALL CAMERA CABLES SHALL BE ROUTED TO NEAREST AUXILIARY BACKBOARD VIA CONDUIT/ CABLE TRAY AND TERMINATED AS DIRECTED BY OWNER. LABEL ALL CABLES PER SPECIFICATIONS. ALL CABLES, BOTH ENDS, SHALL BE LABELED AND TERMINATED PER SPECS/ AS DIRECTED BY OWNER. PROVIDE 10FT SERVICE LOOP ABOVE CEILING AT WORK AREA OUTLET FOR ALL CABLES. NO CABLE SHALL BE UNSUPPORTED FOR A DISTANCE GREATER THAN 5FT.
3. CAMERA OUTLETS SHALL BE MOUNTED AS SHOWN AND SHALL BE CONFIGURED AS SHOWN.

CW — WALL CAMERA OUTLET - FLUSH MOUNTED IN 4" SQUARE BOX WITH SINGLE GANG RAISED COVER. FURNISH AND INSTALL TWO (2) EACH CAT6 CONNECTORS, ONE EACH FACEPLATE (MATCH OTHER DEVICE FACEPLATES WITH PORT CAPACITY AS REQUIRED TO PROVIDE ONE FUTURE PORT) WITH ONE EACH BLANK. FURNISH AND INSTALL TWO (2) EACH CAT6 PLENUM RATED CABLES FROM OUTLET TO NEAREST AUXILIARY BACKBOARD/ CABLE TRAY VIA CONDUIT. ALL CABLES SHALL BE TERMINATED, BOTH ENDS, AS DIRECTED BY OWNER. CAMERAS TO BE FURNISHED AND INSTALLED BY OTHERS.

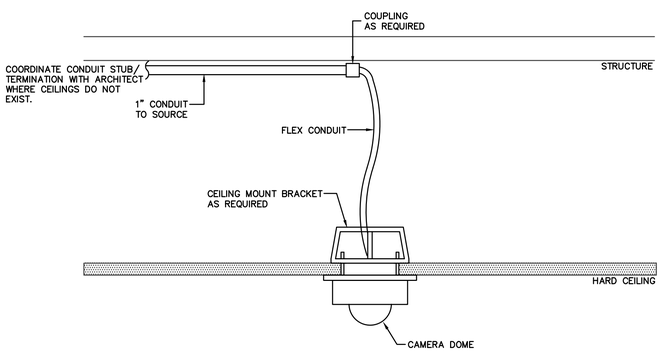

DETAIL: CEILING MOUNTED CAMERA HARD CEILING

NOT TO SCALE

DETAIL NOTES

1. ROUTE ALL AUXILIARY CONDUITS TO NEAREST CABLE TRAY/AUXILIARY BACKBOARD. TERMINATE CONDUITS WITH SMOOTH BUSHING. LABEL ALL CONDUITS PER SPECIFICATIONS. PROVIDE PULL WIRE IN ALL CONDUITS.
2. ALL CAMERA CABLES SHALL BE ROUTED TO NEAREST AUXILIARY BACKBOARD VIA CONDUIT/ CABLE TRAY AND TERMINATED AS DIRECTED BY OWNER. LABEL ALL CABLES PER SPECIFICATIONS. ALL CABLES, BOTH ENDS, SHALL BE LABELED AND TERMINATED PER SPECS/ AS DIRECTED BY OWNER. PROVIDE 10FT SERVICE LOOP ABOVE CEILING AT WORK AREA OUTLET FOR ALL CABLES. NO CABLE SHALL BE UNSUPPORTED FOR A DISTANCE GREATER THAN 5FT.
3. CAMERA OUTLETS SHALL BE MOUNTED AS SHOWN AND SHALL BE CONFIGURED AS SHOWN.

CC — CEILING CAMERA OUTLET - FLUSH MOUNTED IN 4" SQUARE BOX WITH SINGLE GANG RAISED COVER. FURNISH AND INSTALL TWO (2) EACH CAT6 CONNECTORS, ONE EACH FACEPLATE (MATCH OTHER DEVICE FACEPLATES WITH PORT CAPACITY AS REQUIRED TO PROVIDE ONE FUTURE PORT) WITH ONE EACH BLANK. FURNISH AND INSTALL TWO (2) EACH CAT6 PLENUM RATED CABLES FROM OUTLET TO NEAREST AUXILIARY BACKBOARD/ CABLE TRAY VIA CONDUIT. ALL CABLES SHALL BE TERMINATED, BOTH ENDS, AS DIRECTED BY OWNER. CAMERAS TO BE FURNISHED AND INSTALLED BY OTHERS.

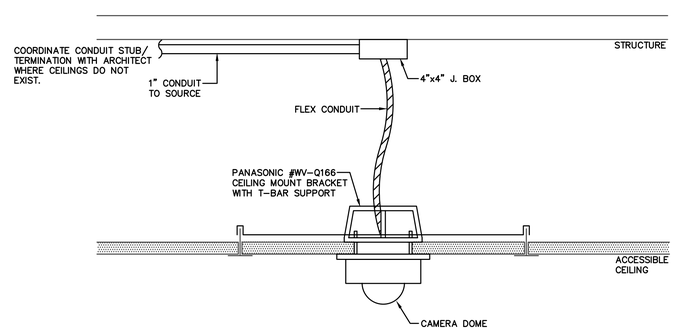

DETAIL: CEILING MOUNTED CAMERA - L.A.T.

NOT TO SCALE

DETAIL NOTES

1. ROUTE ALL AUXILIARY CONDUITS TO NEAREST CABLE TRAY/AUXILIARY BACKBOARD. TERMINATE CONDUITS WITH SMOOTH BUSHING. LABEL ALL CONDUITS PER SPECIFICATIONS. PROVIDE PULL WIRE IN ALL CONDUITS.
2. ALL CAMERA CABLES SHALL BE ROUTED TO NEAREST AUXILIARY BACKBOARD VIA CONDUIT/ CABLE TRAY AND TERMINATED AS DIRECTED BY OWNER. LABEL ALL CABLES PER SPECIFICATIONS. ALL CABLES, BOTH ENDS, SHALL BE LABELED AND TERMINATED PER SPECS/ AS DIRECTED BY OWNER. PROVIDE 10FT SERVICE LOOP ABOVE CEILING AT WORK AREA OUTLET FOR ALL CABLES. NO CABLE SHALL BE UNSUPPORTED FOR A DISTANCE GREATER THAN 5FT.
3. CAMERA OUTLETS SHALL BE MOUNTED AS SHOWN AND SHALL BE CONFIGURED AS SHOWN.

CC — CEILING CAMERA OUTLET - FLUSH MOUNTED IN 4" SQUARE BOX WITH SINGLE GANG RAISED COVER. FURNISH AND INSTALL TWO (2) EACH CAT6 CONNECTORS, ONE EACH FACEPLATE (MATCH OTHER DEVICE FACEPLATES WITH PORT CAPACITY AS REQUIRED TO PROVIDE ONE FUTURE PORT) WITH ONE EACH BLANK. FURNISH AND INSTALL TWO (2) EACH CAT6 PLENUM RATED CABLES FROM OUTLET TO NEAREST AUXILIARY BACKBOARD/ CABLE TRAY VIA CONDUIT. ALL CABLES SHALL BE TERMINATED, BOTH ENDS, AS DIRECTED BY OWNER. CAMERAS TO BE FURNISHED AND INSTALLED BY OTHERS.

EE Group Inc.
gadsden
TEL: (256)413-7717
FAX: (256)413-7769
WEB: WWW.EEGRPINC.COM

Job No. 4800
Plot Date: Sep 15, 2022 11:00:54 am

STATE OF ALABAMA
REGISTERED
No. 21242
9/15/22
PROFESSIONAL ENGINEER
R. MORGAN JR.

THOMAS M. McELRATH, ARCHITECT
ARCHITECTURE and SPACE PLANNING
717 MERIT SPRINGS ROAD
GADSDEN, ALABAMA 35901
PHONE: (256) 490-8244
EMAIL: TOM@TMM-ARCHITECT.COM

A NEW SENIOR WELLNESS CENTER
at
2829 W. Meighan Boulevard
for
THE CITY of GADSDEN, ALABAMA

AUXILIARY DETAILS

DRAWN	
CHECKED	
SCALE	AS NOTED
DATE	SEPTEMBER 15, 2022
FILE	
JOB NO.	22-01
REVISIONS	

SHEET E0.3 OF 9 SHEETS

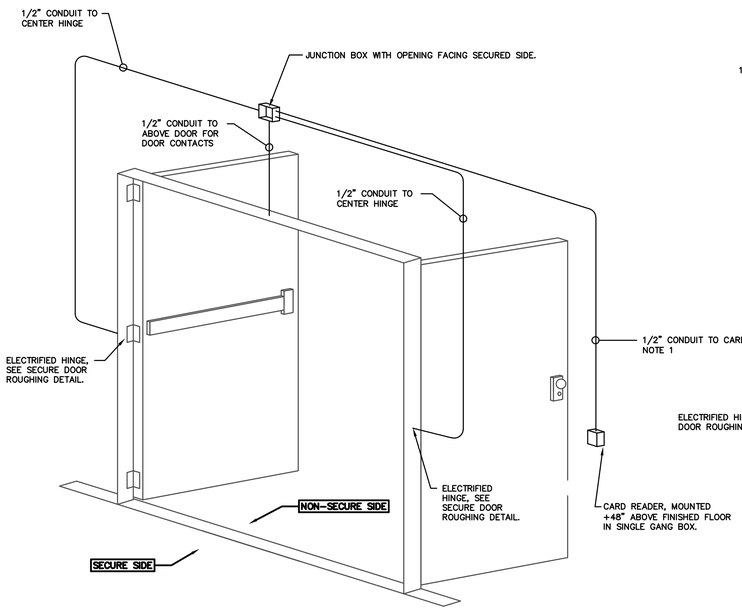

DETAIL: CARD READER SECURE DOOR (DOUBLE)

NOT TO SCALE

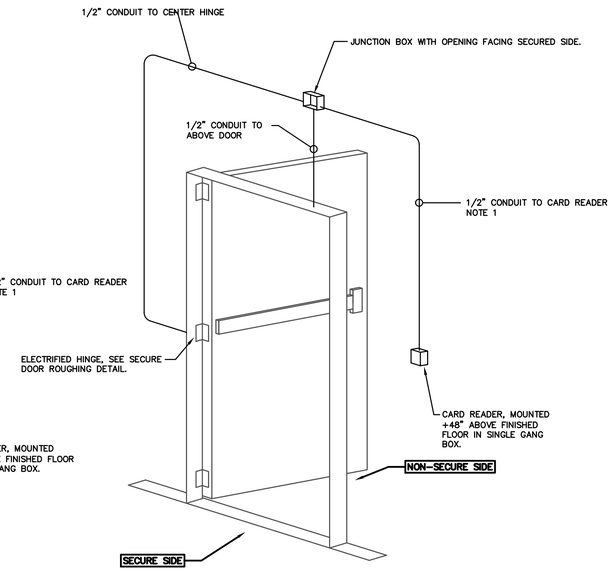

DETAIL: CARD READER SECURE DOOR (SINGLE)

NOT TO SCALE

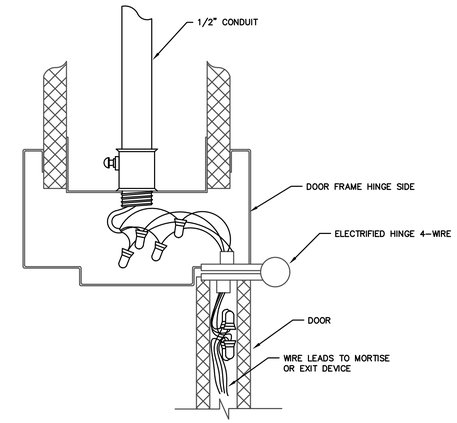

DETAIL: SECURE DOOR ROUGHING

NOT TO SCALE

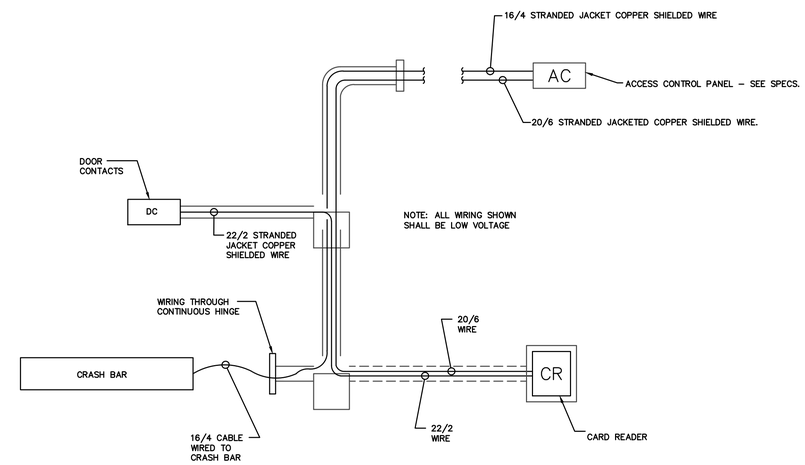

DOOR SECURITY WIRING DIAGRAM

NOT TO SCALE

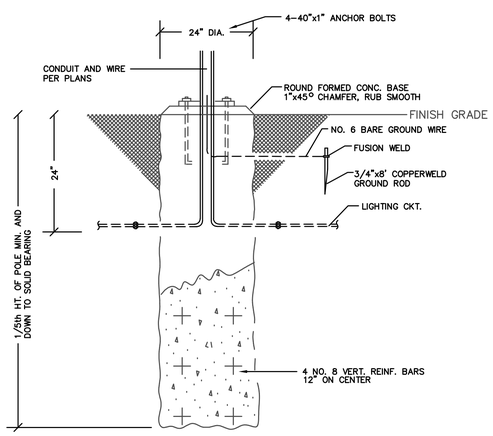

AT-GRADE POLE BASE

NOT TO SCALE FIXTURE:"PT"

DETAIL NOTES:

1. 3500 PSI MINIMUM 28 DAY COMPRESSIVE STRENGTH CONCRETE WITH GRADE 60 RE-BARS.
2. IF WATER IS PRESENT IN HOLE, REMOVE BEFORE POURING CONCRETE.
3. FOUNDATION EXCAVATION SHALL BE BY 24" AUGAR IN UNDISTURBED OR PROPERLY COMPACTED FILL.
4. MINIMUM ALLOWABLE SOIL BEARING PRESSURE 3000 PSF. NOTIFY ENGINEER IF BEARING PRESSURE IS LESS.
5. AIR ENTRAINMENT: 4 TO 6%.

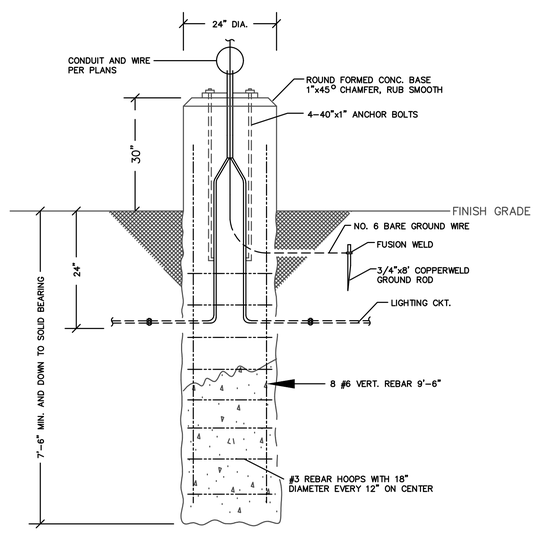

PARKING AREA POLE BASE

NOT TO SCALE FIXTURE MARK: "PL3HS" & "PL32HS"

PARKING AREA POLE NOTES:

1. 3500 PSI MINIMUM 28 DAY COMPRESSIVE STRENGTH CONCRETE WITH GRADE 60 RE-BARS.
2. IF WATER IS PRESENT IN HOLE, REMOVE BEFORE POURING CONCRETE.
3. FOUNDATION EXCAVATION SHALL BE BY 24" AUGAR IN UNDISTURBED OR PROPERLY COMPACTED FILL.
4. MINIMUM ALLOWABLE SOIL BEARING PRESSURE 3000 PSF. NOTIFY ENGINEER IF BEARING PRESSURE IS LESS.
5. AIR ENTRAINMENT: 4 TO 6%.

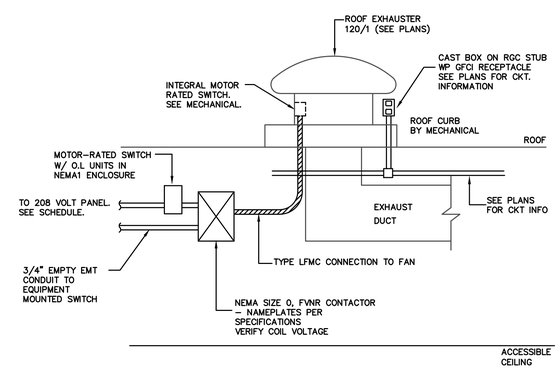

120V-1PH ROOF FAN

FAN CONTROLLED BY EQUIPMENT SWITCH

NOT-TO-SCALE

EE Group Inc.
gadsden
TEL: (256)413-7717
FAX: (256)413-7769
WEB: WWW.EEGRPINC.COM

Job No. 4800

Plot Date: Sep 15, 2022 11:00:34 am

STATE OF ALABAMA REGISTERED ENGINEER No. 21242 9/15/22 R. MORGAN JR.

THOMAS M. McELRATH, ARCHITECT
ARCHITECTURE and SPACE PLANNING
717 MERIT SPRINGS ROAD
GADSDEN, ALABAMA 35901
PHONE: (256) 490-8244
EMAIL: TOM@TMM-ARCHITECT.COM

A NEW SENIOR WELLNESS CENTER
at
2829 W. Meighan Boulevard
for
THE CITY of GADSDEN, ALABAMA

ELECTRICAL DETAILS - 1

DRAWN	
CHECKED	
SCALE	AS NOTED
DATE	SEPTEMBER 15, 2022
FILE	
JOB NO.	22-01
REVISIONS	

SHEET E0.4 OF 9 SHEETS

EE Group Inc.
gadsden
TEL: (256)413-7717
FAX: (256)413-7769
WEB: WWW.EEGRPINC.COM
Job No. 4800
Plot Date: Sep 15, 2022 11:00:21 am

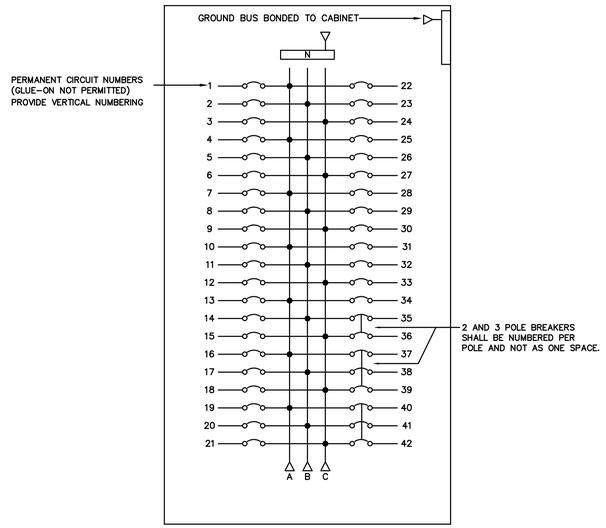

PANELBOARD NOTES

NOT TO SCALE

DETAIL NOTES:

1. ARRANGE BREAKERS AS FOLLOWS: 1 POLE, LOW TO HIGH TRIP; 2 POLE, LOW TO HIGH TRIP; 3 POLE, LOW TO HIGH TRIP; SPARES THEN SPACE.
2. ALL PANELS TO HAVE DOOR-IN-DOOR (HINGED TRIM) CONSTRUCTION.
3. FOR SURFACE MOUNTED PANELS INSTALL ALL NAMEPLATES (PER DETAILS) USING MACHINE SCREWS. FOR FLUSH PANELS IN FINISHED SPACES, INSTALL NAMEPLATES TO INSIDE OF DOOR USING 2 PART EPOXY (12HR)
4. FOR ALL FLUSH PANELS, FURNISH AND INSTALL 4EA. 1" EMPTY CONDUITS TO ABOVE NEAREST ACCESSIBLE CLG, LABELS AS SPARES AND PROVIDE REQD. FIRESTOP.
5. ALL PANELS TO HAVE WELDED METAL DIRECTORY CARD HOLDERS.

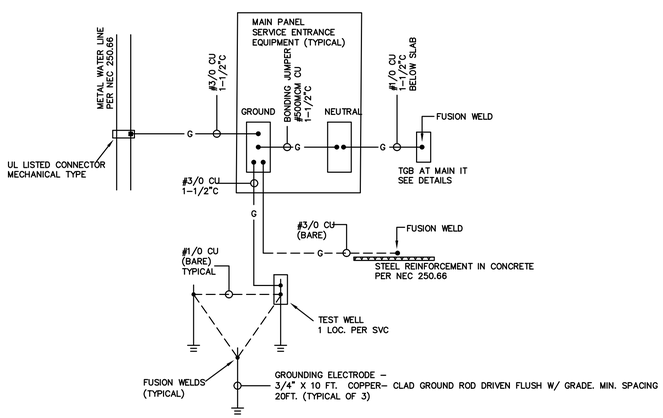

SERVICE ENTRANCE GROUNDING

NOT TO SCALE (PNL MP1 AND MP2)

NOTES:

1. BOND METAL PIPING SYSTEMS INCLUDING GAS PIPING TO THE SERVICE EQUIPMENT ENCLOSURE PER NEC 250.104(B), SIZED PER 250.122 BASED ON THE SIZE OF THE CIRCUIT SUPPLYING THE EQUIPMENT.

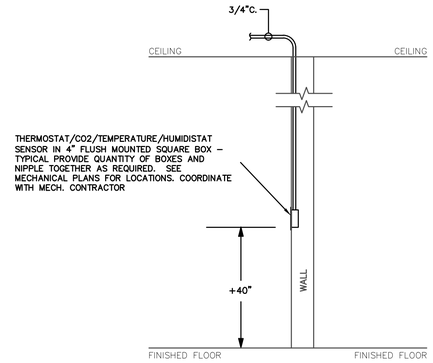

MECHANICAL CONTROLS

FLUSH MOUNTED WHERE SHOWN ON NEW WALLS

NOT TO SCALE SYMBOLS: S T C

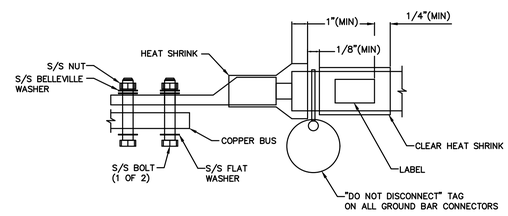

TYPICAL GROUNDING LUG

NOT TO SCALE

GENERAL BAR NOTES:

1. FURNISH AND INSTALL BUS BAR AND CONDUCTORS AS SHOWN UNLESS OTHERWISE NOTED.
2. LABEL ALL BUS BARS WITH PERMANENT ENGRAVED NAMEPLATE.
3. GROUNDING CONDUCTORS, OTHER THAN AC POWER FEEDERS SHALL BE INSTALLED IN NON-METALLIC RIGID CONDUITS EXCEPT AS NOTED.
4. GROUND BAR CONDUCTORS SHALL NOT SHARE CONDUITS OR PULL BOXES WITH CONDUCTORS OR CABLES OF OTHER SYSTEMS.
5. PULL BOX USED FOR GROUND CONDUCTORS SHALL BE NONMETALLIC.
6. SEE SPECIFICATIONS FOR REQUIRED MAXIMUM RESISTANCE TO GROUND.
7. PROVIDE AND INSTALL IDENTIFICATION ON BOTH ENDS OF EACH GROUNDING CONDUCTOR INDICATING DESTINATION.

GENERAL GROUNDING LUG NOTES:

1. ALL HARDWARE SHALL BE STAINLESS STEEL INCLUDING BELLEVILLES. COAT ALL SURFACES WITH KOPR-SHIELD BEFORE MATING,
2. FOR GROUND BOND TO STEEL ONLY: INSERT A DRAGON TOOTH WASHER BETWEEN LUG AND STEEL. COAT ALL SURFACES WITH KOPR-SHIELD.

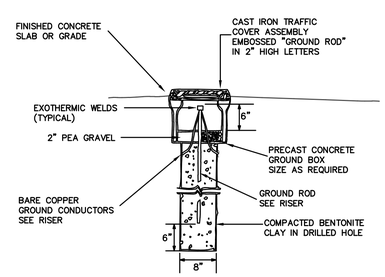

GROUND ROD TEST WELLS (1 REQD. PER SERVICE)

NOT TO SCALE

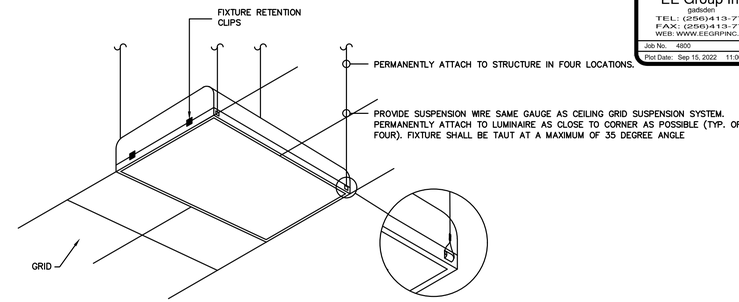

RECESSED FIXTURE SUPPORTS

NOT TO SCALE

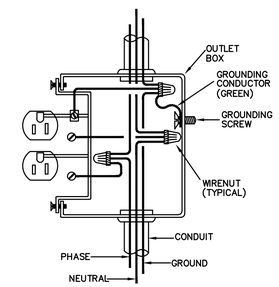

RECEPTACLE INSTALLATION

NOT TO SCALE

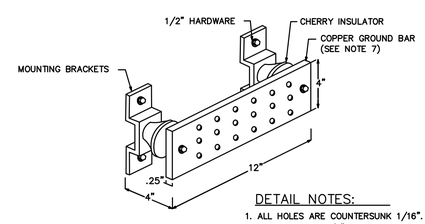

DETAIL NOTES:

1. ALL HOLES ARE COUNTERSUNK 1/16".
2. BAR STOCK IS 1/4" THICK.

TYPICAL GROUND BUS

NOT TO SCALE

DETAIL NOTES:

1. FURNISH AND INSTALL BUS BAR AND CONDUCTORS AS SHOWN UNLESS OTHERWISE NOTED.
2. LABEL ALL BUS BARS WITH PERMANENT ENGRAVED NAMEPLATE.
3. GROUNDING CONDUCTORS, OTHER THAN AC POWER FEEDERS SHALL BE INSTALLED IN NONMETALLIC RIGID CONDUITS EXCEPT AS NOTED.
4. GROUND BAR CONDUCTORS SHALL NOT SHARE CONDUITS OR PULL BOXES WITH CONDUCTORS OR CABLES OF OTHER SYSTEMS.
5. PULL BOX USED FOR GROUND CONDUCTORS SHALL BE NONMETALLIC.
6. SEE SPECIFICATIONS FOR REQUIRED MAXIMUM RESISTANCE TO GROUND.
7. GROUND BAR KIT SHALL BE OTRONICS# WWBB-12 MOUNT INSULATORS DIRECT TO INSIDE BACKING OF NEMA 3R ENCLOSURE (SEE EQUIPMENT ELEVATIONS FOR APPROXIMATE LOCATION). ENCLOSURE SHALL BE SIZE SUCH THAT ADIQUATE WIRE BENDING SPACE IS PROVIDED ON ALL SIDES.
8. FURNISH AND INSTALL A MAIN GROUND BUS AT EACH SERVICE LOCATION.

ALABAMA REGISTERED ENGINEER No. 21242 9/15/22 R. MORGAN JR.

THOMAS M. McELRATH, ARCHITECT
ARCHITECTURE and SPACE PLANNING
717 MERIT SPRINGS ROAD
GADSDEN, ALABAMA 35901
PHONE: (256) 490-8244
EMAIL: TOM@TMM-ARCHITECT.COM

A NEW SENIOR WELLNESS CENTER
at
2829 W. Meighan Boulevard
for
THE CITY of GADSDEN, ALABAMA

ELECTRICAL DETAILS - 2

DRAWN	
CHECKED	
SCALE	AS NOTED
DATE	SEPTEMBER 15, 2022
FILE	
JOB NO.	22-01
REVISIONS	

SHEET E0.5 OF 9 SHEETS

EE Group Inc.
gadsden
TEL: (256)413-7717
FAX: (256)413-7769
WEB: WWW.EEGRPINC.COM
Job No. 4800
Plot Date: Sep 15, 2022 10:59:00 am

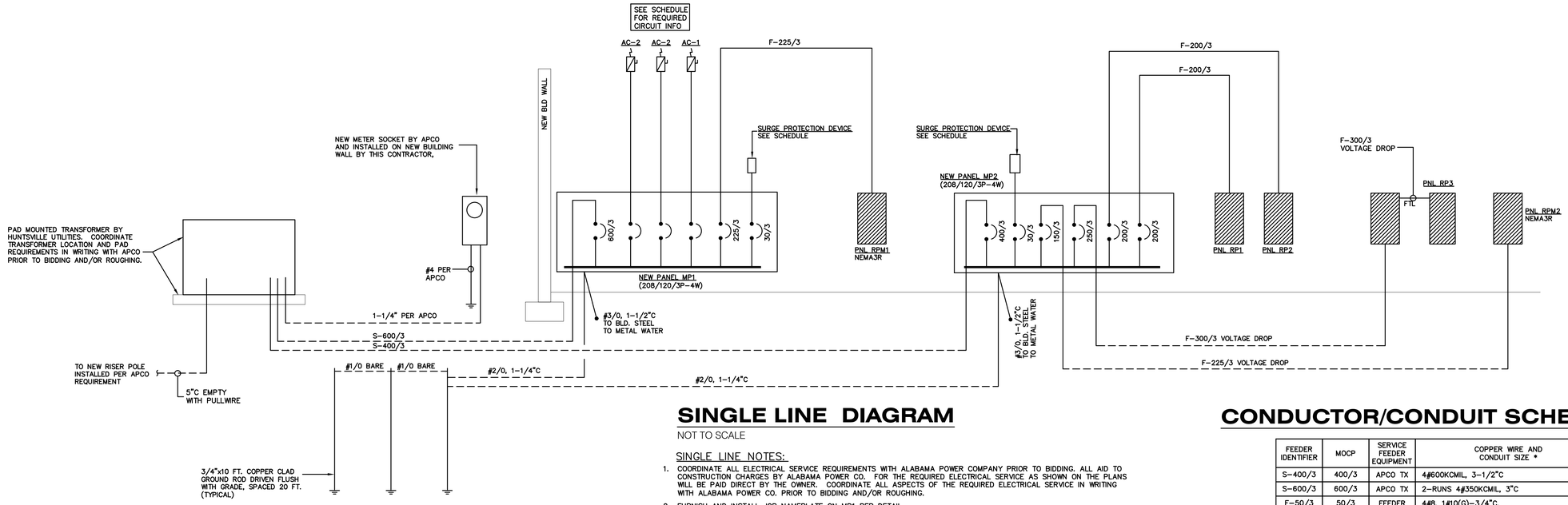

SINGLE LINE DIAGRAM

NOT TO SCALE

SINGLE LINE NOTES:

1. COORDINATE ALL ELECTRICAL SERVICE REQUIREMENTS WITH ALABAMA POWER COMPANY PRIOR TO BIDDING. ALL AID TO CONSTRUCTION CHARGES BY ALABAMA POWER CO. FOR THE REQUIRED ELECTRICAL SERVICE AS SHOWN ON THE PLANS WILL BE PAID DIRECT BY THE OWNER. COORDINATE ALL ASPECTS OF THE REQUIRED ELECTRICAL SERVICE IN WRITING WITH ALABAMA POWER CO. PRIOR TO BIDDING AND/OR ROUGHING.
2. FURNISH AND INSTALL JOB NAMEPLATE ON MP1 PER DETAIL
3. FURNISH AND INSTALL ENGRAVED NAMEPLATES ON EACH BREAKER IN PANELS MP1 AND MP2 INDICATING LOAD SERVED.
4. FURNISH AND INSTALL ENGRAVED NAMEPLATES ON ALL ELECTRICAL EQUIPMENT PER DETAIL
5. FURNISH HINGED TRIM FOR ALL LIGHTING AND RECEPTACLE BRANCH CIRCUIT PANELS THIS PROJECT.
6. PROVIDE REQUIRED GROUNDING ELECTRODE CONNECTIONS AS SHOWN ON DETAIL.
7. FURNISH AND INSTALL LINE WARNING TAPE ON ALL UNDERGROUND CONDUITS,

CONDUCTOR/CONDUIT SCHEDULE

FEEDER IDENTIFIER	MOCP	SERVICE FEEDER EQUIPMENT	COPPER WIRE AND CONDUIT SIZE *
S-400/3	400/3	APCO TX	4#600KCMIL, 3-1/2"C
S-600/3	600/3	APCO TX	2-RUNS 4#350KCMIL, 3"C
F-50/3	50/3	FEEDER	4#8, 1#10(G)-3/4"C.
F-70/3	70/3	FEEDER	4#4, 1#8(G)-1-1/4"C.
F-100/3	100/3	FEEDER	4#3, 1#8(G)-1 1/4"C.
F-125/3	125/3	FEEDER	4#1, 1#6(G), 1-1/2"C.
F-150/3	150/3	FEEDER	4#1/0, 1#6(G), 2"C.
F-200/3	200/3	FEEDER	4#3/0, 1#6(G), 2"C.
F-225/3	225/3	FEEDER	4#4/0, 1#4(G), 2-1/2"C.
F-300/3	225/3	FEEDER	4#350MCM, 1#4(G), 3"C., VOLTAGE DROP

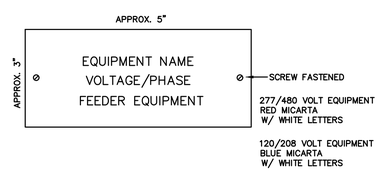

NAMEPLATES DETAIL

ALL ELECTRICAL EQUIPMENT PER SPECIFICATIONS
NOT TO SCALE

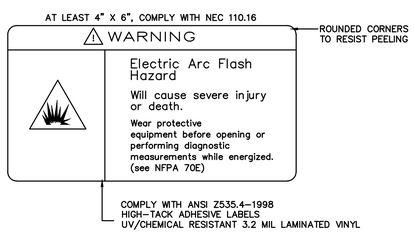

ARC FLASH HAZARD LABEL

ALL ELECTRICAL EQUIPMENT PER SPECIFICATIONS
NOT TO SCALE

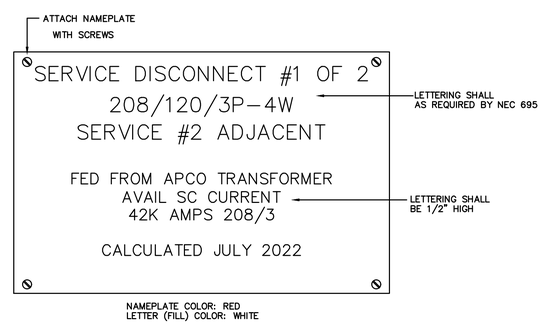

SERVICE ENTRANCE NAMEPLATES

NOT TO SCALE PANEL MP1

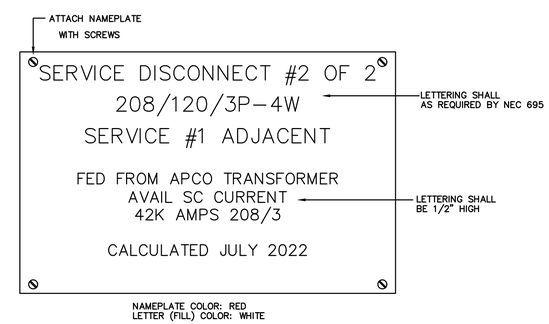

SERVICE ENTRANCE NAMEPLATES

NOT TO SCALE PANEL MP2

THOMAS M. McELRATH, ARCHITECT
ARCHITECTURE and SPACE PLANNING
717 MERIT SPRINGS ROAD
GADSDEN, ALABAMA 35901
PHONE: (256) 490-8244
EMAIL: TOM@TMM-ARCHITECT.COM

ALABAMA REGISTERED ARCHITECT No. 21242 9/15/22 THOMAS M. McELRATH JR.

A NEW SENIOR WELLNESS CENTER
at
2829 W. Meighan Boulevard
for
THE CITY of GADSDEN, ALABAMA

ELECTRICAL SINGLE LINE DIAGRAM

DRAWN	
CHECKED	
SCALE	AS NOTED
DATE	SEPTEMBER 15, 2022
FILE	
JOB NO.	22-01
REVISIONS	

SHEET E0.6 OF 9 SHEETS

EE Group Inc.
gadsden
TEL: (256)413-7717
FAX: (256)413-7769
WEB: WWW.EEGRPINC.COM
Job No. 4800
Plot Date: Sep 15, 2022 10:58:01 am

ALABAMA REGISTERED No. 21242 9/15/22 PROFESSIONAL ENGINEER R. MORGAN JR.

THOMAS M. McELRATH, ARCHITECT
ARCHITECTURE and SPACE PLANNING
717 MERIT SPRINGS ROAD
GADSDEN, ALABAMA 35901
PHONE: (256) 490-8244
EMAIL: TOM@TMM-ARCHITECT.COM

A NEW SENIOR WELLNESS CENTER
at
2829 W. Meighan Boulevard
for
THE CITY of GADSDEN, ALABAMA

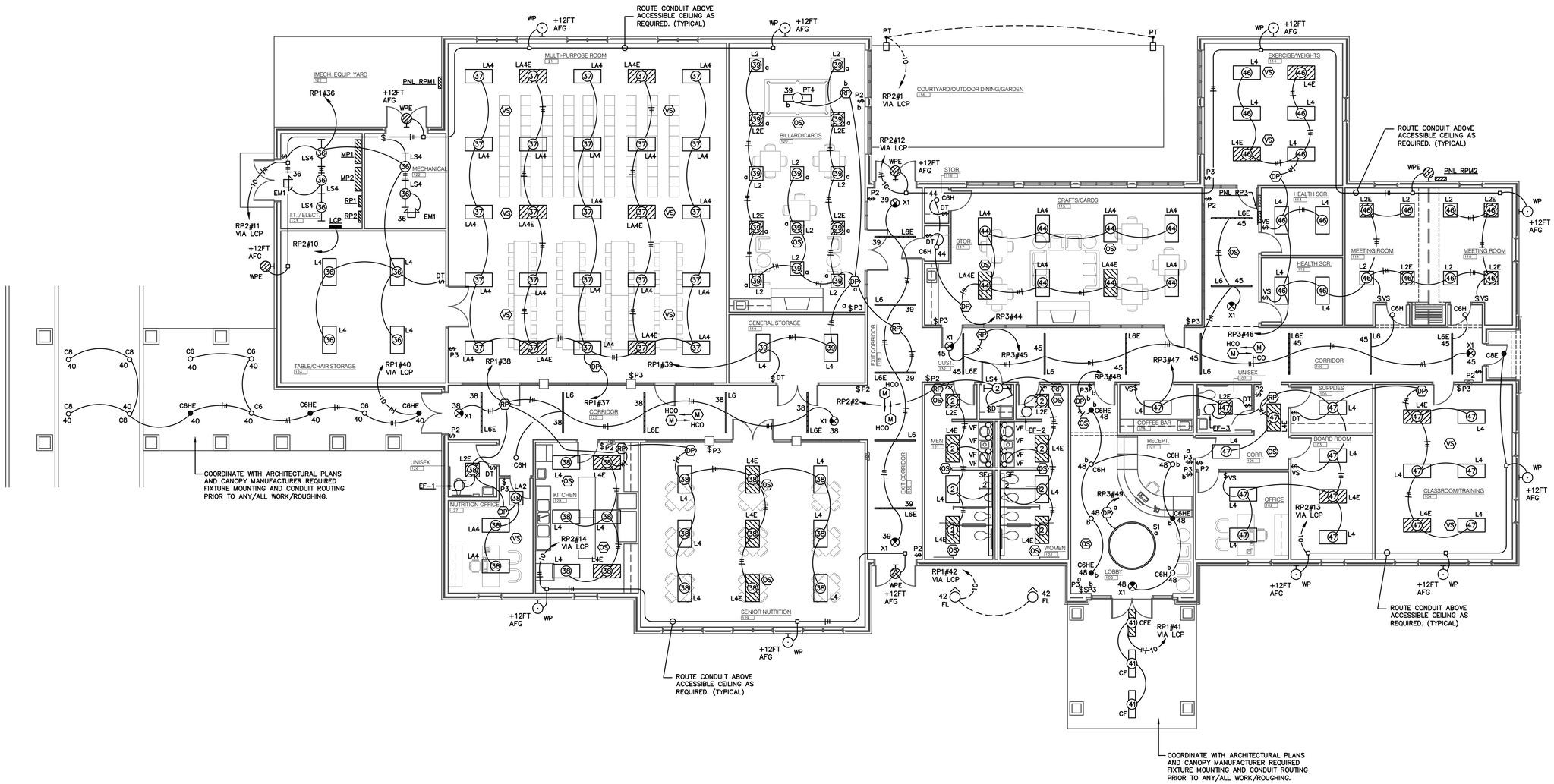

FLOOR PLAN - LIGHTING

SCALE: 1/8" = 1'-0"

FLOOR PLAN - LIGHTING

DRAWN	
CHECKED	
SCALE	AS NOTED
DATE	SEPTEMBER 15, 2022
FILE	
JOB NO.	22-01
REVISIONS	

SHEET E1.0 OF 9 SHEETS

EE Group Inc.
gadsden
TEL: (256)413-7717
FAX: (256)413-7769
WEB: WWW.EEGRPINC.COM
Job No. 4800
Plot Date: Sep 15, 2022 10:57:43 am

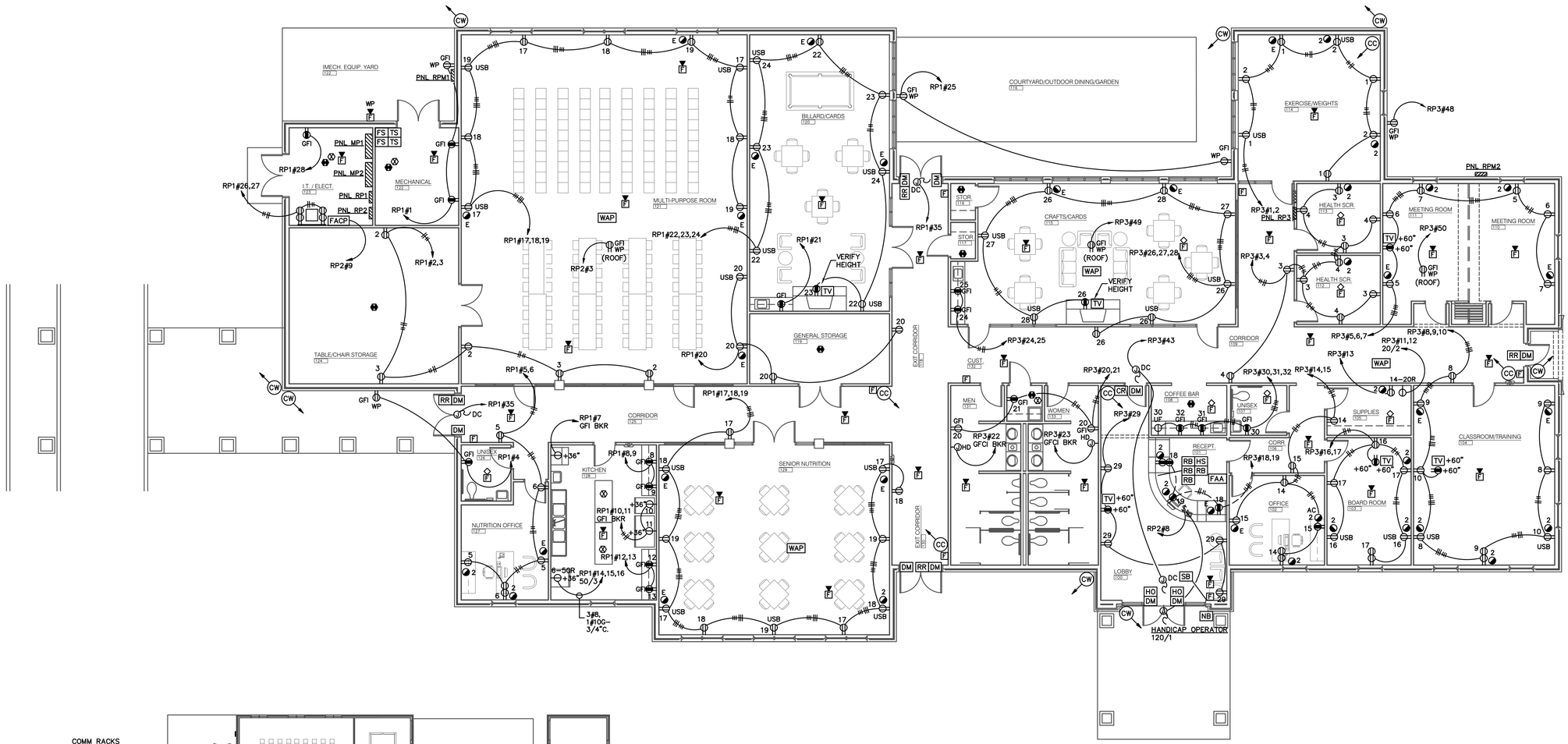

FLOOR PLAN - POWER AND AUXILIARY

SCALE: 1/8" = 1'-0"

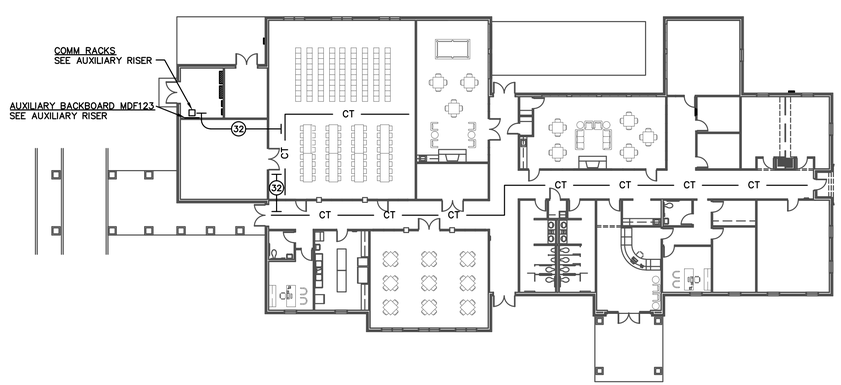

FLOOR PLAN - AUXILIARY CABLE TRAY AND SLEEVES

SCALE: 1" = 20'-0"

THOMAS M. McELRATH, ARCHITECT
ARCHITECTURE and SPACE PLANNING
717 MERIT SPRINGS ROAD
GADSDEN, ALABAMA 35901
PHONE: (256) 490-8244
EMAIL: TOM@TMM-ARCHITECT.COM

A NEW SENIOR WELLNESS CENTER
at
2829 W. Meighan Boulevard
for
THE CITY of GADSDEN, ALABAMA

FLOOR PLAN - POWER

DRAWN	
CHECKED	
SCALE	AS NOTED
DATE	SEPTEMBER 15, 2022
FILE	
JOB NO.	22-01
REVISIONS	

SHEET E2.0 OF 9 SHEETS

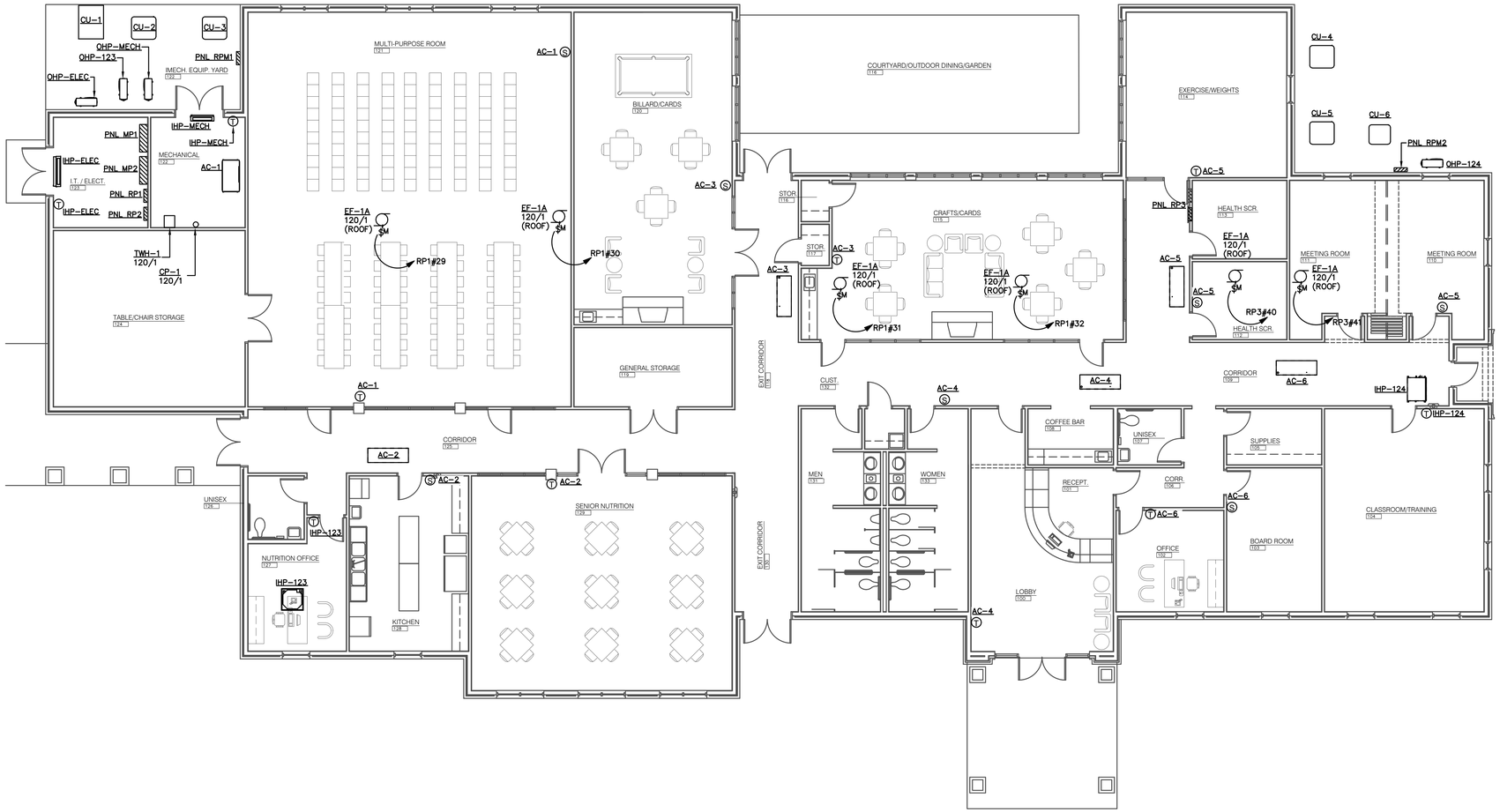

FLOOR PLAN - M&P CONNECTIONS

SCALE: 1/8" = 1'-0"

M&P ELECTRICAL CONNECTIONS SCHEDULE

MARK	VOLTAGE / PHASE	DESCRIPTION	TERMINATION AT EQUIPMENT	MOCP	WIRE & CONDUIT	PANEL & CKT
OHP-123	208/1	OUTDOOR HEAT PUMP	-------	30/2	2#10,1#10G,3/4"C	RPM1#1,2
OHP-124	208/1	OUTDOOR HEAT PUMP	-------	30/2	2#10,1#10G,3/4"C	RPM2#1,2
OHP-ELEC	208/1	OUTDOOR HEAT PUMP	-------	30/2	2#10,1#10G,3/4"C	RPM1#3,4
OHP-MECH	208/1	OUTDOOR HEAT PUMP	-------	30/2	2#10,1#10G,3/4"C	RPM1#5,6
IHP-123	INDOOR HEAT PUMP POWERED BY OUTDOOR HEAT PUMP THROUGH FIELD SUPPLIED INTERCONNECTED WIRING					
IHP-124	INDOOR HEAT PUMP POWERED BY OUTDOOR HEAT PUMP THROUGH FIELD SUPPLIED INTERCONNECTED WIRING					
IHP-ELEC	INDOOR HEAT PUMP POWERED BY OUTDOOR HEAT PUMP THROUGH FIELD SUPPLIED INTERCONNECTED WIRING					
IHP-MECH	INDOOR HEAT PUMP POWERED BY OUTDOOR HEAT PUMP THROUGH FIELD SUPPLIED INTERCONNECTED WIRING					
CU-1	208/3	CONDENSING UNIT	-------	50/3	3#8,1#10G,3/4"C	RPM1#7,8,9
CU-2	208/3	CONDENSING UNIT	-------	35/3	3#8,1#10G,3/4"C	RPM1#10,11,12
CU-3	208/3	CONDENSING UNIT	-------	35/3	3#8,1#10G,3/4"C	RPM1#13,14,15
CU-4	208/3	CONDENSING UNIT	-------	30/3	3#10,1#10G,3/4"C	RPM2#3,4,5
CU-5	208/3	CONDENSING UNIT	-------	30/3	3#10,1#10G,3/4"C	RPM2#6,7,8
CU-6	208/1	CONDENSING UNIT	-------	25/2	2#10,1#10G,3/4"C	RPM2#9,10
AC-1	208/3	INDOOR AIR HANDLING UNIT	200/3 SAFETY SWITCH	125/3	3#1,1#6G,1-1/2"C	MP1
AC-2	208/3	INDOOR AIR HANDLING UNIT	60/3 SAFETY SWITCH	45/3	3#8,1#10G,3/4"C	MP1
AC-3	208/3	INDOOR AIR HANDLING UNIT	60/3 SAFETY SWITCH	45/3	3#8,1#10G,3/4"C	MP1
AC-4	208/3	INDOOR AIR HANDLING UNIT	60/3 SAFETY SWITCH	45/3	3#8,1#10G,3/4"C	RP3#35,36,37
AC-5	208/3	INDOOR AIR HANDLING UNIT	60/3 SAFETY SWITCH	45/3	3#8,1#10G,3/4"C	RP3#38,39,40
AC-6	208/1	INDOOR AIR HANDLING UNIT	60/2 SAFETY SWITCH	50/2	2#8,1#10G,3/4"C	RP3#33,34
TWH-1	120/1	GAS TANKLESS WATER HEATER	MOTOR RATED SWITCH	20/1	2#12,1#12G, 3/4"C	RP1#33
CP-1	120/1	CIRCULATING PUMP	MOTOR RATED SWITCH	20/1	2#12,1#12G, 3/4"C	RP1#34

EE Group Inc.
gadsden
TEL: (256)413-7717
FAX: (256)413-7769
WEB: WWW.EEGRPINC.COM
Job No. 4800
Plot Date: Sep 15, 2022 10:56:49 am

ALABAMA REGISTERED No. 21242 9/15/22 PROFESSIONAL ENGINEER R. MORGAN JR.

THOMAS M. McELRATH, ARCHITECT
ARCHITECTURE and SPACE PLANNING
717 MERIT SPRINGS ROAD
GADSDEN, ALABAMA 35901
PHONE: (256) 490-8244
EMAIL: TOM@TMM-ARCHITECT.COM

A NEW SENIOR WELLNESS CENTER
at
2829 W. Meighan Boulevard
for
THE CITY of GADSDEN, ALABAMA

FLOOR PLAN - M&P CONNECTIONS

DRAWN
CHECKED
SCALE AS NOTED
DATE SEPTEMBER 15, 2022
FILE
JOB NO. 22-01
REVISIONS

SHEET E3.0 OF 9 SHEETS

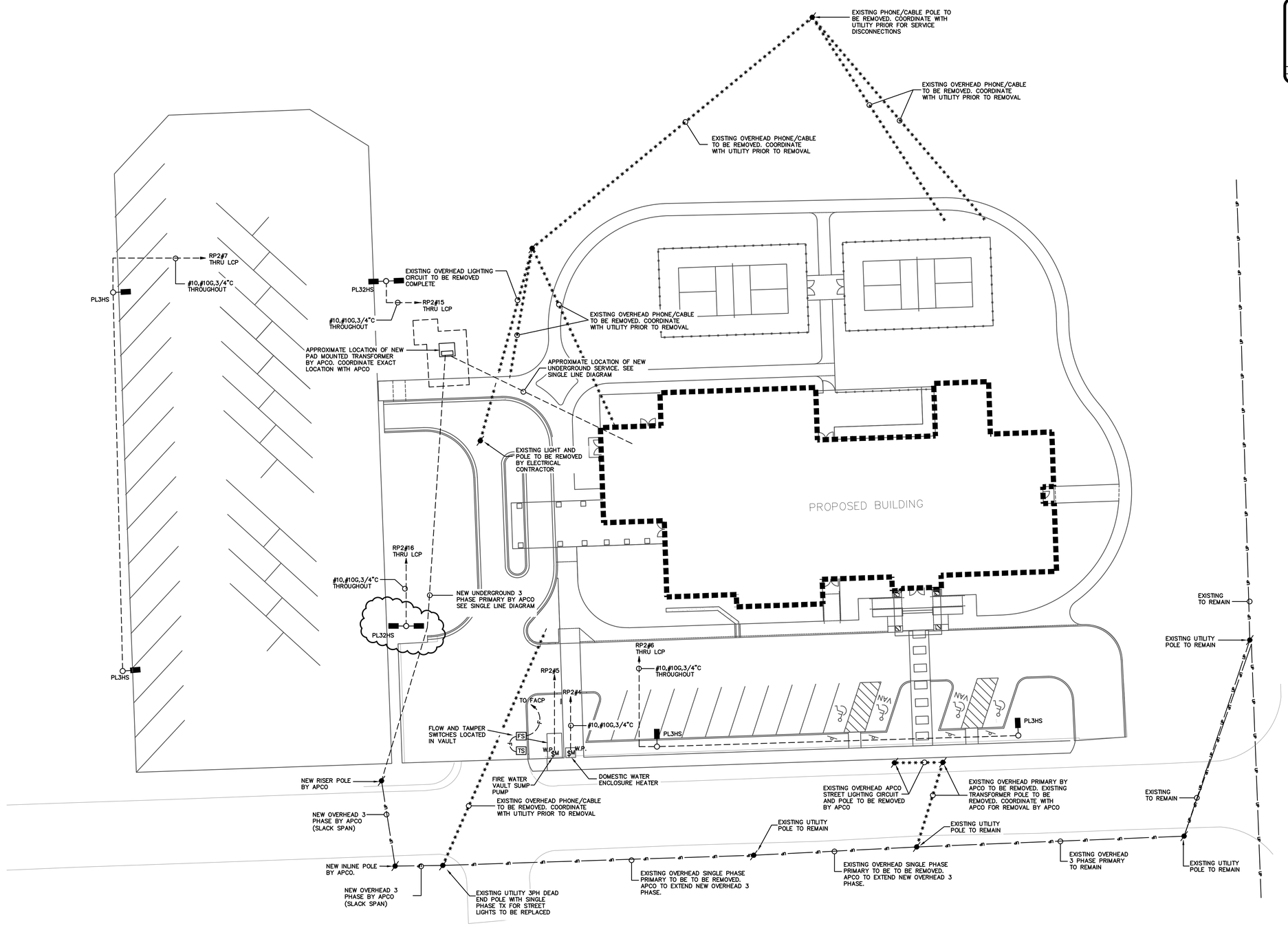

SITE PLAN - ELECTRICAL

SCALE: 1" = 20'-0"

NOTES THIS SHEET:

1. ALL AID TO CONSTRUCTION CHARGES BY UTILITY TO BE PAID DIRECT BY OWNER.

EE Group Inc.
gadsden
TEL: (256)413-7717
FAX: (256)413-7769
WEB: WWW.EEGRPINC.COM

Job No. 4800
Plot Date: Sep 15, 2022 10:59:20 am

ALABAMA REGISTERED PROFESSIONAL ENGINEER No. 21242 9/15/22 R. MORGAN JR.

THOMAS M. McELRATH, ARCHITECT
ARCHITECTURE and SPACE PLANNING
717 MERIT SPRINGS ROAD
GADSDEN, ALABAMA 35901
PHONE: (256) 490-8244
EMAIL: TOM@TMM-ARCHITECT.COM

A NEW SENIOR WELLNESS CENTER
at
2829 W. Meighan Boulevard
for
THE CITY of GADSDEN, ALABAMA

SITE PLAN - ELECTRICAL

DRAWN	
CHECKED	
SCALE	AS NOTED
DATE	SEPTEMBER 15, 2022
FILE	
JOB NO.	22-01
REVISIONS	

SHEET E4.0 OF 9 SHEETS