CLASSROOM ADDITION

FOR

UNION HILL SCHOOL

SOMERVILLE, ALABAMA

FOR THE

MORGAN COUNTY BOARD of EDUCATION

LOCATION MAP

UNION HILL SCHOOL

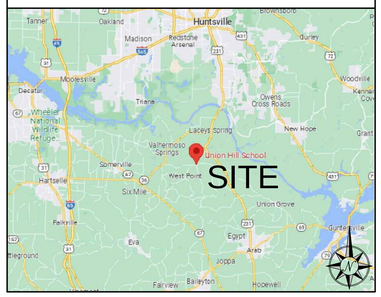

VICINITY MAP

UNION HILL SCHOOL

2221 UNION HILL ROAD, SOMERVILLE, AL 35670

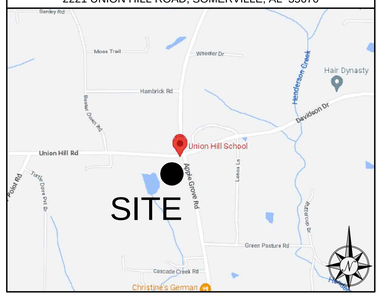

CONTACTS

OWNER
Morgan County Board of Education
235 Highway 67 South
Decatur, Alabama 35603
Phone: (256) 309-2100

PROGRAM MANAGER
Volkert Inc.
1616 2nd Avenue South, Suite 150
Birmingham, Alabama 35233
Phone: (205) 214-5500

STRUCTURAL
Blackburn, Daniels, O'barr Consulting Structural Engineers
1005 Browns Hill Road
Lowndesboro, Alabama 36752
Phone: (334) 265.0206

PLUMBING and MECHANICAL
Zgouvas, Eiring and Associates
800 South McDonough Street
Montgomery, Alabama 36104
Phone: (334) 263.4406

ARCHITECTURAL
Mckee and Associates
631 South Hull Street
Montgomery, Alabama 36104
Phone: (334) 834.9933

CIVIL
Johnson & Associates
1218 Church Street
Huntsville, Alabama 35801
Phone: (256) 533.7331

ELECTRICAL
Gunn and Associates
3102 Highway 14
Millbrook, AL 36054
Phone: (334) 285.1273

INDEX TO DRAWINGS

GENERAL		**STRUCTURAL**		**FIRE PROTECTION**		**ELECTRICAL**	
G0.1	TITLE SHEET AND INDEX TO DRAWINGS	S0.1	GENERAL NOTES, SCHEDULES, AND TYPICAL DETAILS	FS1.1	FIRE SPRINKLER FIRST FLOOR PLAN	E0.1	ELECTRICAL LEGEND
G1.1	CODE FLOOR PLANS	S0.2	TYPICAL DETAILS	FS1.2	FIRE SPRINKLER SECOND FLOOR PLAN	E0.2	ELECTRICAL LEGEND AND NOTES
G1.2	TORNADO SHELTER PLAN	S1.1	FOUNDATION PLAN	FS2.1	FIRE SPRINKLER NOTES & DETAILS	E1.1	SITE PLAN - ELECTRICAL DEMOLITION & NEW WORK
		S1.2	SECOND FLOOR AND LOW ROOF FRAMING PLAN			E1.2	SITE PLAN - ELECTRICAL DETAILS
CIVIL		S1.3	ROOF FRAMING PLAN			E2.1	FIRST FLOOR PLAN - LIGHTING
C1.0	LIMITED TOPOGRAPHIC SURVEY	S2.1	SECTIONS AND DETAILS			E2.2	SECOND FLOOR PLAN - LIGHTING
C2.0	DEMOLITION PLAN (PHASE I)	S2.2	SECTIONS AND DETAILS	**PLUMBING**		E2.3	LIGHTING CONTROLS
C2.1	DEMOLITION PLAN (PHASE II)	S2.3	SECTIONS AND DETAILS	P1	PLUMBING SCHEDULES AND DETAILS	E3.1	FIRST FLOOR PLAN - POWER
C3.0	DIMENSION PLAN	S2.4	SECTIONS AND DETAILS	P2	PLUMBING DETAILS AND RISERS	E3.2	SECOND FLOOR PLAN - POWER
C3.1	DIMENSION PLAN	**ARCHITECTURAL**		P3	PLUMBING RISERS	E3.3	FLOOR PLAN ELEMENTARY SCHOOL - EQUIPMENT POWER
C4.0	GRADING AND DRAINAGE PLAN	A0.1	SITE PLAN PHASE 1 - DEMOLITION AND STAGING	P4	PLUMBING PLANS - SHOWING WASTE PIPING	E3.4	FLOOR PLAN ELEMENTARY SCHOOL - EQUIPMENT POWER
C5.0	EROSION CONTROL PLAN - PRE-CONSTRUCTION AND	A0.2	SITE PLAN PHASE 1 - CONSTRUCTION	P5	PLUMBING PLANS - SHOWING WATER PIPING & RISER	E3.5	EQUIPMENT SCHEDULE AND DETAILS
	DEMOLITION PHASE	A0.3	SITE PLAN PHASE 2 - DEMOLITION			E4.1	FIRST FLOOR PLAN - AUXILIARY
C5.1	EROSION CONTROL PLAN - CONSTRUCTION PHASE I	A0.4	SITE PLAN PHASE 2 - CONSTRUCTION			E4.2	SECOND FLOOR PLAN - AUXILIARY
C5.2	EROSION CONTROL PLAN - POST CONSTRUCTION PHASE I	A1.1	FIRST FLOOR PLAN & EXISTING RESTROOM AREA PLANS			E5.1	LUMINAIRE & PANEL SCHEDULE AND NOTES
C5.3	EROSION CONTROL PLAN - POST CONSTRUCTION PHASE II	A1.2	SECOND FLOOR PLAN AND PARTITION TYPES SCHEDULE	**MECHANICAL**		E5.2	PANELBOARD SCHEDULES AND NOTES
C6.0	UTILITY PLAN	A1.10	ENLARGED PLANS AND DETAILS	M1	HVAC FLOOR PLANS	E5.3	PANELBOARD SCHEDULES AND NOTES
C7.0	CONSTRUCTION DETAILS	A2.1	REFLECTED CEILING PLANS	M2	STORM SHELTER VENTILATION PLAN AND	E6.1	FIRE ALARM RISER AND NOTES
C7.1	CONSTRUCTION DETAILS	A3.1	ROOF PLAN		TOILET BUILDING PLAN	E7.1	RISER DIAGRAM AND NOTES
C7.2	CONSTRUCTION DETAILS	A4.1	EXTERIOR ELEVATIONS	M3	LARGE SCALE MECHANICAL ROOMS AND SECTIONS	E7.2	GROUNDING DETAILS AND NOTES
C7.3	CONSTRUCTION DETAILS	A5.1	BUILDING SECTION AND DETAILS	M4	LARGE SCALE MECHANICAL ROOMS AND SECTIONS	E8.1	AUXILIARY DETAILS
C7.4	CONSTRUCTION DETAILS	A6.1	WALL SECTIONS	M5	HVAC SCHEDULES	E8.2	AUXILIARY DETAILS
C7.5	CONSTRUCTION DETAILS	A8.1	FINISH SCHEDULE	M6	HVAC DETAILS		
C7.6	CONSTRUCTION DETAILS	A8.2	DOOR, FRAME, AND WINDOW SCHEDULES	M7	HVAC DETAILS		
C7.7	CONSTRUCTION DETAILS	A8.3	DOOR AND WINDOW DETAILS	M8	O.A. CALCULATIONS		
		A9.1	MISCELLANEOUS DETAILS				
		A9.2	STAIR A - PLANS AND SECTION				
		A9.3	STAIR B - PLANS AND SECTION				
		A10.1	CASEWORK				

CLASSROOM ADDITION
FOR
UNION HILL SCHOOL
SOMERVILLE, ALABAMA
FOR THE
MORGAN COUNTY BOARD OF EDUCATION

McKEE and ASSOCIATES
ARCHITECTS, INC.
631 SOUTH HULL STREET, MONTGOMERY, ALABAMA 36104 (334) 834-9933

STATE OF ALABAMA
WALTER T. MCKEE, JR.
NO. 1882
MONTGOMERY, ALA.
REGISTERED ARCHITECT

SHEET TITLE : COVER SHEET AND INDEX TO DRAWINGS

MCKEE JOB # : 22-134

DRAWN BY : VH

DATE: 10-13-2022

REVISED DATE:

REVISED DATE:

REVISED DATE:

DCM NO. 2022222

SHEET NO. : G0.1

- Z:\2022\22-134 Classroom Addition for Union Hill School\CAD Drawings\Architectural\---G0.1 Cover Sheet and Index.dwg
- Friday, October 14, 2022 1:26:55 PM

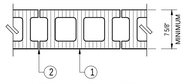

1 hour CMU wall: Calculated Fire Resistance to meet or exceed IBC Sec. 721.3

Bearing Wall - 1 hour

Non-Bearing Wall - 1 hour

1. Concrete Blocks - Various Designs. Classification D-2 (1 hr.) Classification to meet or exceed 1-hour design
2. Mortar - Blocks laid in full bed of mortar, nominal 3/8 in. thick, of not less than 2-1/4 and not more than 3-1/2 parts of clean sharp sand to 1 part Portland cement (proportioned by volume) and not more than 50 percent hydrated lime (by cement volume)

ONE-HOUR FIRE RATED PARTITION PLAN DETAIL

SCALE: 1" = 1'-0"

A

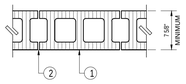

UL Design No. U905 - 2 hour wall

Bearing Wall - 2 hour

Non-Bearing Wall - 2 hour

1. Concrete Blocks - Various Designs. Classification C-2 (2 hr.)
2. Mortar - Blocks laid in full bed of mortar, nominal 3/8 in. thick, of not less than 2-1/4 and not more than 3-1/2 parts of clean sharp sand to 1 part Portland cement (proportioned by volume) and not more than 50 percent hydrated lime (by cement volume) Vertical joints staggered (running bond).

TWO-HOUR FIRE RATED WALL PLAN DETAIL

SCALE: 1" = 1'-0"

B

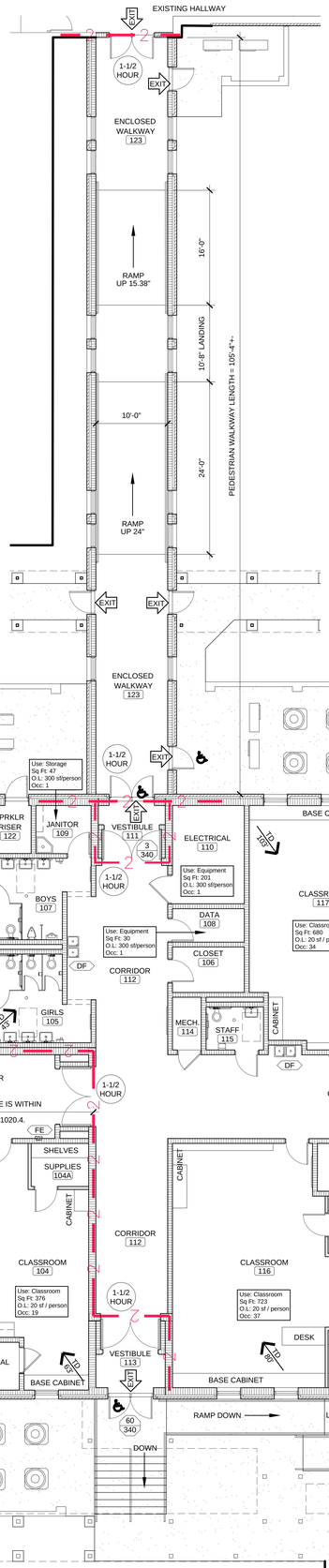

CODE LEGEND

SYMBOL	DESCRIPTION
1	ONE HOUR FIRE RATED PARTITION - SEE SECTION A/G1.1
2	TWO HOUR FIRE RATED PARTITION - SEE SECTION B/G1.1
EXIT	PRIMARY BUILDING OR AREA EXIT
TD 250'	TRAVEL DISTANCE NEAREST TO EXIT
	HANDICAP ACCESSIBLE
DF	DRINKING FOUNTAIN
FE	FIRE EXTINGUISHER LOCATION
EWR-10" EWP-34"	EXIT WIDTH REQUIRED EXIT WIDTH PROVIDED
168 / 340	ACTUAL OCCUPANT LOAD SERVED TOTAL EGRESS CAPACITY
3/4 HOUR	FIRE-RATED DOOR AND FRAME ASSEMBLY

EXIT CALCULATIONS

CLASSROOM BUILDING ADDITION

OCCUPANCY TYPE - GROUP **'E'**
BUILDING TYPE: **II-B**
ALLOWABLE AREA FACTOR: **43,500** SQ FT (TABLE 506.2)
ACTUAL SF - **18,216** SQ FT (9,070 SF 1ST FLOOR + 9,146 SF 2ND FLOOR)
ALLOWABLE AREA: 100,920 SQ FT (2-STORY, SPRINKLERED, WITH AREA INCREASE)

ALLOWABLE HEIGHT (TABLE 504.3) ALLOWABLE # OF STORIES (TABLE 504.4)
ALLOWABLE HEIGHT: **75** FT
ALLOWABLE NO. OF STORIES: **3**
ACTUAL BUILDING HEIGHT: **± 40** FT
ACTUAL NO. OF STORIES: **2**

BUILDING AREA MODIFICATION (506.3) - NOT NEEDED

OCCUPANT LOAD

OCCUPANT LOAD TOTAL (1004 & TABLE 1004.1.2) =
501 PERSONS (221 ON 1ST FLOOR, 280 ON 2ND FLOOR)

EXIT REQUIREMENTS

EXIT ACCESS (TABLE 1006.2.1 & TABLE 1006.3.1)
NO. OF EXITS REQUIRED: **2** PER STORY
NO. OF EXITS FURNISHED: **4** FROM 1ST FLOOR**, 2** FROM 2ND FLOOR
TOTAL CAPACITY OF EXITS FURNISHED: 1,360 PERSONS ON 1ST FLOOR, 339 PERSONS ON 2ND FLOOR

MEANS OF EGRESS WIDTH (1005.3)
SEE PLANS FOR EXIT WIDTHS

MINIMUM CORRIDOR WIDTH (TABLE 1020.2) **72" (SEE PLANS FOR CALCULATIONS)**

EXIT ACCESS TRAVEL DISTANCE LIMITATION IS 250 FEET FOR **SPRINKLERED EDUCATIONAL (**TABLE 1017.2)

EXIT ACCESS STAIRWAYS (1006.3, SECTION 1019, 1019.3 EXCEPTION #1): EXIT TRAVEL DISTANCE EXTENDS FROM UPPER FLOOR SPACES TO THE STAIR EXIT ON THE LOWER FLOOR.

COMMON PATH OF TRAVEL LIMITATION IS 75 FEET FOR **SPRINKLERED EDUCATIONAL (**TABLE 1006.2.1)

WHERE MORE THAN ONE EXIT OR EXIT ACCESS DOORWAY IS REQUIRED, DEAD ENDS IN CORRIDORS ARE LIMITED TO 50 FEET IN **SPRINKLERED EDUCATIONAL** OCCUPANCIES (IBC 1020.4, EXCEPTION NO. 2).

A ROOM, AREA,OR SPACE WITHIN A FLOOR WITH A MAXIMUM OCCUPANT LOAD OF 49 AND MAXIMUM COMMON PATH OF EGRESS TRAVEL OF 75 FEET MAY HAVE ACCESS TO ONLY ONE EXIT. APPLIES TO SPRINKLERED EDUCATIONAL OCCUPANCIES, PER 1006.2 AND TABLE 1006.2.1.

"ENCLOSED WALKWAY": MEETS REQUIREMENTS FOR "PEDESTRIAN WALKWAYS" IN CHAPTER 31.

1. NONCOMBUSTIBLE CONSTRUCTION (3104.3)
2. 2-HOUR FIRE BARRIER AT CONNECTIONS TO INTERIOR OF BUILDINGS (3104.5.1)
3. EXTERIOR WALLS OF BUILDING CONNECTED TO PEDESTRIAN WALKWAY SHALL BE 2-HOUR FIRE-RESISTANCE RATED FOR 10-FOOT AREA AROUND THE PERIMETER OF THE PEDESTRIAN WALKWAY (3104.5.1.1) OPENINGS IN THESE EXTERIOR WALLS SHALL HAVE 3/4 HOUR FIRE PROTECTION RATING (3104.5.1.2).
4. UNOBSTRUCTED INTERIOR WIDTH SHALL BE BETWEEN 3' AND 30' (3104.8).
5. EXIT ACCESS TRAVEL DISTANCE WITHIN THE WALKWAY IS LIMITED TO 200 FEET (3104.9).

CODE REVIEW

CLASSROOM BUILDING ADDITION

CODE: **2015 INTERNATIONAL BUILDING CODE**

OCCUPANCY TYPE: **GROUP 'E' (EDUCATIONAL)**

SPRINKLERED: **YES**

NUMBER OF STORIES: **2**

CONSTRUCTION TYPE: **TYPE II-B**

TYPE **II-B**, REQUIRES THE FOLLOWING FIRE RESISTANCE (TABLE 601):

STRUCTURAL FRAME:	**0 HOUR**
EXTERIOR BEARING WALLS:	**0 HOUR**
INTERIOR BEARING WALLS:	**0 HOUR**
EXTERIOR NONBEARING WALLS:	**0 HOUR**
INTERIOR NONBEARING WALLS:	**0 HOUR**
FLOOR CONSTRUCTION:	**0 HOUR**
ROOF CONSTRUCTION:	**0 HOUR**

OTHER REQUIREMENTS:

TABLE 602, FIRE SEPARATION DISTANCE, EXTERIOR WALLS:
LESS THAN 10' TO PROPERTY LINE - 1 HOUR FIRE RATING
10' OR MORE FROM PROPERTY LINE - 0 HOUR (NO RATING REQUIRED)

FIRE WALL RATING (TABLE 706.4): **2 HOURS PER FOOTNOTE "a" (NONE)**

OCCUPANCY SEPARATION (TABLE 508.4): **NONE**

INCIDENTAL USE AREAS (TABLE 509): **NONE**

CORRIDORS (TABLE 1020.1): CORRIDORS IN SPRINKLERED **'E'** OCCUPANCY ARE NOT REQUIRED TO BE FIRE RATED.

SHAFT ENCLOSURES (707.3.1 AND 713.4): **1 HOUR WALL AND DOOR RATING**

FIRE OPENING PROTECTION (TABLE 716.5):
2 HOUR FIRE BARRIER: 1.5 HOURS
1 HOUR SHAFT FIRE BARRIER: 1 HOUR DOOR AND GLAZING

ELEVATOR HOISTWAY SHAFT OPENING PROTECTION (3006.2): REQUIRED WHEN AN ELEVATOR CONNECTS 4 OR MORE STORIES. DUE TO FIRE SPRINKLER PROTECTION THROUGHOUT THE BUILDING, HOISTWAY OPENING PROTECTION IS NOT REQUIRED IN THIS 2-STORY BUILDING.

2-STORY OPENING REQUIREMENTS (712.1.9): SPRINKLERS REQUIRED, FIRE ALARM REQUIRED. BOTH ARE PROVIDED. *EXIT ACCESS STAIRS* MAY BE OPEN TO A CORRIDOR IF THE FLOOR IS SPRINKLERED (712.9, ITEM #5).

EXIT ACCESS STAIRWAYS (1006.3, SECTION 1019, 1019.3 EXCEPTION #1): NOT REQUIRED TO BE SEPARATED FROM THE CORRIDOR IF THE FLOOR IS SPRINKLERED. SHAFT ENCLOSURE PROTECTION IS REQUIRED (713.4).

FIRE BARRIERS (TABLE 707.3.10): FIRE AREAS ARE NOT REQUIRED IN SPRINKERED BUILDINGS. NO MIXED OCCUPANCIES OCCUR.

DRAFTSTOPPING OF ATTIC AND CONCEALED ROOF SPACES: NOT REQUIRED IN NONCOMBUSTIBLE ATTIC SPACES AND CONCEALED ROOF SPACES, PER 718.4. FIREBLOCKING AND DRAFTSTOPPING IS REQUIRED IN COMBUSTIBLE CONCEALED LOCATIONS (718.1).

TORNADO SHELTER SEPARATION FROM OTHER BUILDING AREAS (ICC 500, SECTION 601): 2 HOUR RATING

PLUMBING CALCULATIONS

PLUMBING REQUIREMENTS - 1ST FLOOR

OCCUPANT LOAD TOTAL = **221** PERSONS

TOILET FIXTURES (TABLE 2902.1)
MEN'S (1 PER 50 OCC.) (**111** OCC.): **3** REQ
WOMEN'S (1 PER 50 OCC.) (**111** OCC.): **3** REQ

LAVATORIES (TABLE 2902.1)
MEN'S (1 PER 50 OCC.) (**111** OCC.): **3** REQ
WOMEN'S (1 PER 50 OCC.) (**111** OCC.): **3** REQ

DRINKING FOUNTAINS (TABLE 2902.1)
(1 PER 100 OCC.) (**221** OCC.): **3** REQ

SERVICE SINK (TABLE 2902.1): **1** REQ

PLUMBING PROVIDED TOTAL

TOILET FIXTURES (TABLE 2902.1)
MEN'S - 3 PROVIDED
WOMEN'S - 3 PROVIDED
STAFF - 1 PROVIDED

LAVATORIES (TABLE 2902.1)
MEN'S - 3 PROVIDED
WOMEN'S - 3 PROVIDED
STAFF - 1 PROVIDED

DRINKING FOUNTAINS (TABLE 2902.1)
4 PROVIDED

SERVICE SINK (TABLE 2902.1):
1 PROVIDED

PLUMBING CALCULATIONS

PLUMBING REQUIREMENTS - 2ND FLOOR

OCCUPANT LOAD TOTAL = **280** PERSONS

TOILET FIXTURES (TABLE 2902.1)
MEN'S (1 PER 50 OCC.) (**140** OCC.): **3** REQ
WOMEN'S (1 PER 50 OCC.) (**140** OCC.): **3** REQ

LAVATORIES (TABLE 2902.1)
MEN'S (1 PER 50 OCC.) (**140** OCC.): **3** REQ
WOMEN'S (1 PER 50 OCC.) (**140** OCC.): **3** REQ

DRINKING FOUNTAINS (TABLE 2902.1)
(1 PER 100 OCC.) (**280** OCC.): **3** REQ

SERVICE SINK (TABLE 2902.1): 1 REQ

PLUMBING PROVIDED TOTAL

TOILET FIXTURES (TABLE 2902.1)
MEN'S - 3 PROVIDED
WOMEN'S - 3 PROVIDED
STAFF - 1 PROVIDED

LAVATORIES (TABLE 2902.1)
MEN'S - 3 PROVIDED
WOMEN'S - 3 PROVIDED
STAFF - 1 PROVIDED

DRINKING FOUNTAINS (TABLE 2902.1)
4 PROVIDED

SERVICE SINK (TABLE 2902.1):
1 PROVIDED

FIRST FLOOR CODE PLAN

SCALE: 1/8" = 1'-0"

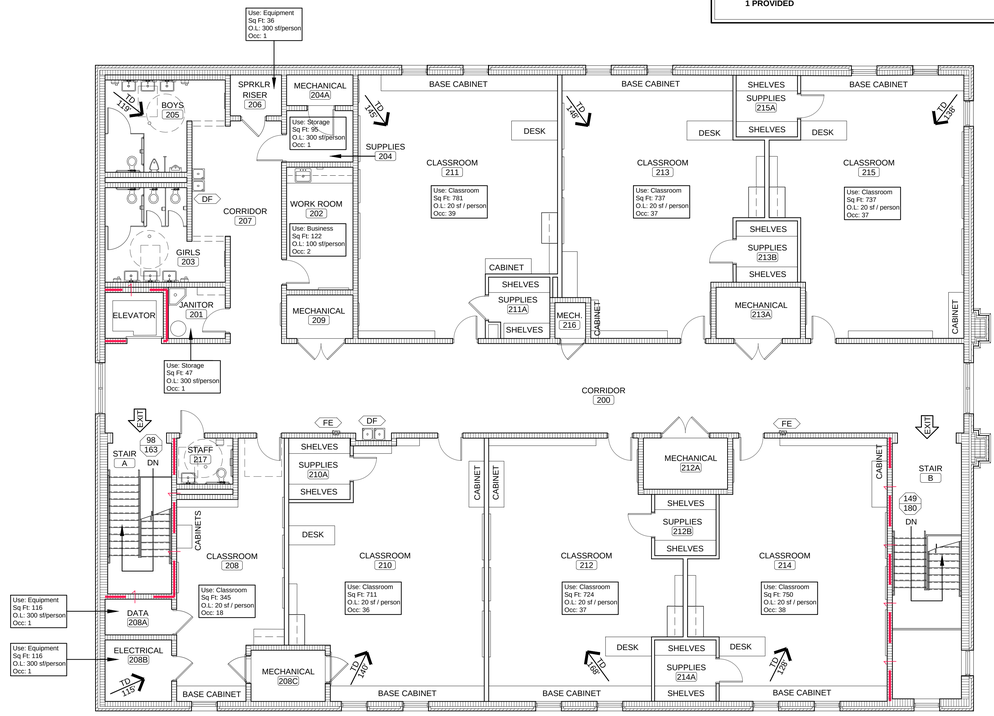

TRAVEL DISTANCES SHOWN ON THE SECOND FLOOR PLAN INCLUDE THE PATH DOWN THE EXIT ACCESS STAIRWAYS AND TO THE EXIT DOORS ON THE FIRST FLOOR.

SECOND FLOOR CODE PLAN

SCALE: 1/8" = 1'-0"

CLASSROOM ADDITION FOR UNION HILL SCHOOL

SOMERVILLE, ALABAMA

FOR THE

MORGAN COUNTY BOARD OF EDUCATION

McKEE and ASSOCIATES ARCHITECTS, INC.
631 SOUTH HULL STREET , MONTGOMERY , ALABAMA 36104 (334) 834-9933

STATE OF ALABAMA REGISTERED ARCHITECT WALTER T. McKEE, JR. No. 1082 MONTGOMERY, ALA.

SHEET TITLE : CODE FLOOR PLANS

MCKEE JOB # : 22-134

DRAWN BY : VH

DATE: 10-13-2022

REVISED DATE:

REVISED DATE:

REVISED DATE:

SHEET NO. : G1.1

- Z:\2022\22-134 Classroom Addition for Union Hill School\CAD Drawings\Architectural\--G1.1 Code Plans.dwg
- Friday, October 14, 2022 12:31:00 PM

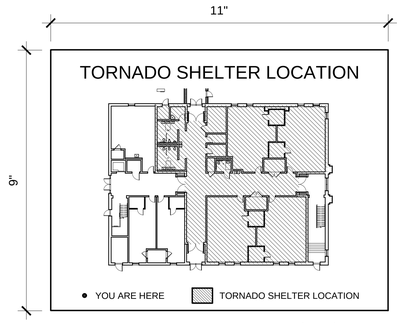

TORNADO SHELTER SIGN (SRI)

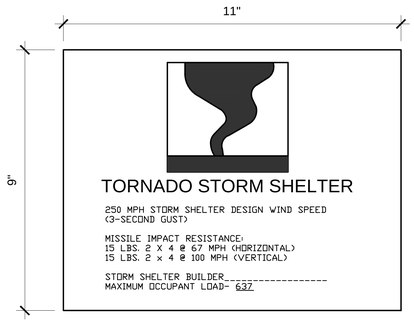

TORNADO SHELTER SIGN (SRB)

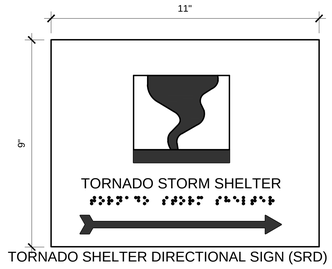

TORNADO SHELTER DIRECTIONAL SIGN (SRD)

SIGN TO BE MOUNTED SO THAT BRAILLE IS NO HIGHER THAN 48" ABOVE FINISH FLOOR



TORNADO SHELTER SIGN (SRS)

SIGN TO BE MOUNTED SO THAT BRAILLE IS NO HIGHER THAN 48" ABOVE FINISH FLOOR

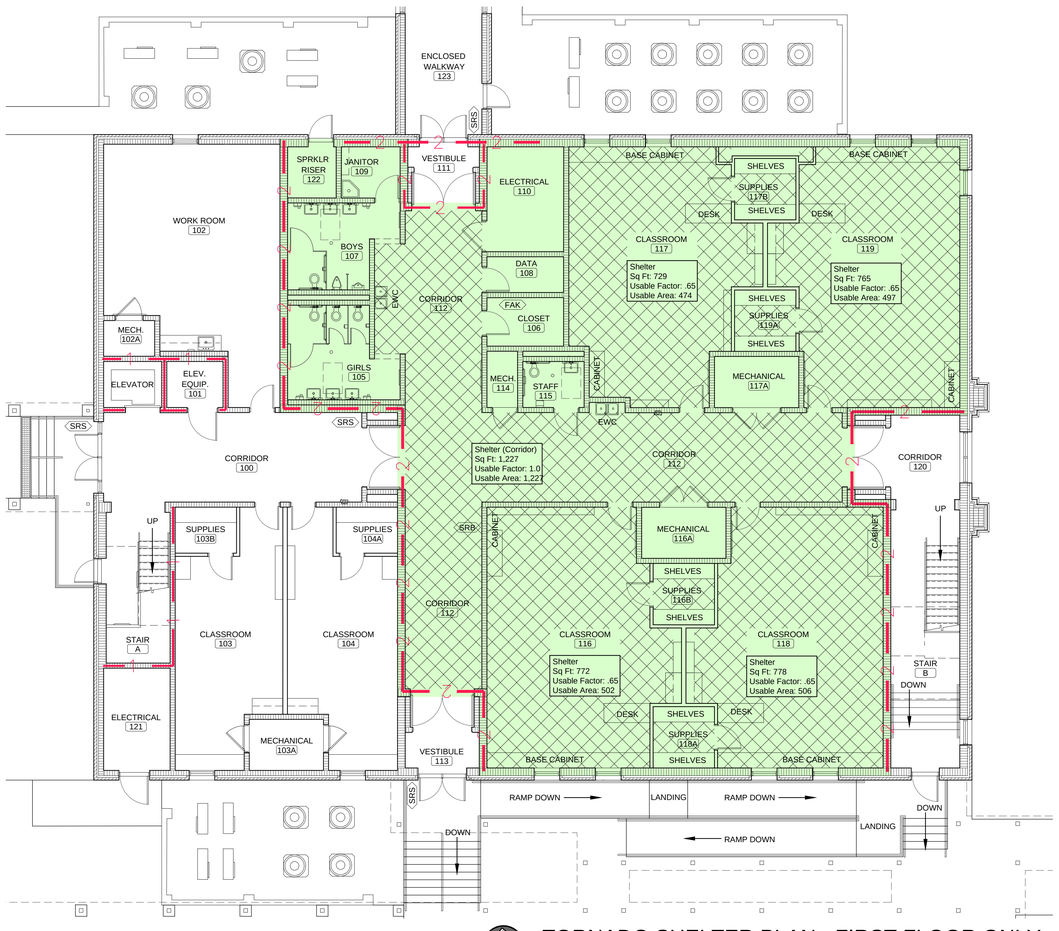

TORNADO SHELTER PLAN - FIRST FLOOR ONLY

SCALE: 1/8" = 1'-0"

TORNADO SHELTER DESIGN INFORMATION

WIND AND DESIGN LOAD	
DESIGN WIND SPEED	250 MPH
WIND IMPORTANCE FACTOR, I	1.0
WIND EXPOSURE CATAGORY	C
INTERNAL PRESSURE COEFFICIENT, GC_{pi}	+-0.55
TOPOGRAPHIC FACTOR, K_{zt}	1.0
WIND DIRECTIONALITY FACTOR, K_{d}	1.0
MISSILE IMPACT CRITERIA	100 MPH VERTICALLY 67 MPH HORIZONTALLY
ROOF LIVE LOAD	100 PSF
VENTING AREA (SQ. IN.)	CITING EXCEPTION 304.8 2008 ICC 500
WALL / OPENINGS / DOOR AND WINDOW ASSEMBLIES	
DOOR / ALCOVES /BAFFLED ENTRY	TESTING IN COMPLIANCE WITH ICC-500
WALLS AND ROOF SYSTEMS	TESTING IN COMPLIANCE WITH ICC-500 OR APPENDIX E FEMA 361
GLAZING SYSTEMS	N/A (INTERIOR STORM SHUTTERS COMPLING WITH ICC-500
OPENING PROTECTIVES - LOUVERS OR VENTS	TESTING IN COMLIANCE WITH ICC-500
FLOOD HAZARDS	
SPECIAL FLOOD HAZARD AREA	NO
WITHIN 0.2% OF SFPA	NO
SHELTER AREA FLOOR ELEVATION	1257.50'

TORNADO SHELTER LEGEND

SYMBOL	DESCRIPTION
	OVERALL SHELTER CONSTRUCTION LIMITS
	EXTENTS OF USABLE SHELTER AREA
2 2	TWO HOUR FIRE BARRIER WITH 90 MINUTE OPENING PROTECTIVES
SRS	TORNADO SHELTER ROOM SIGNAGE IN ACCORDANCE WITH ICC 500 - SECTION 504.1.1 & ALABAMA BUILDING COMMISSION BULLETIN JULY 29, 2010, SUBJECT: ADDITIONAL GUIDANCE ON ICC 500 REQUIREMENTS, ATTACHMENT D SHELTER LOCATION SIGNAGE
SRD	TORNADO SHELTER ROOM DIRECTIONAL SIGNAGE (SIGNAGE TO BE POSTED AT EVERY EXIT IN EXISTING BUILDINGS AND CORRIDOR INTERSECTIONS) (PROVIDE 5 SIGNS)
SRB	TORNADO SHELTER ROOM DESIGN INFORMATION SIGNAGE IN ACCORDANCE WITH ICC 500 - SECTION 108.1 & ALABAMA BUILDING COMMISSION BULLETIN DATED JULY 29, 2010, SUBJECT: ADDITIONAL GUIDANCE ON ICC 500 REQUIREMENTS ITEM #6 SHELTER SIGNAGE. AND ATTACHMENT C DESIGN INFORMATION SHELTER SIGNAGE. POST OCCUPANT LOAD FOR EACH OCCUPIED SPACE WITHIN SHELTER, POST TOTAL OCCUPANT LOAD OF SHELTER AT "MAIN" DOORS OF SHELTER
FAK	FIRST AID KIT, PROVIDE 3 (SEE SPECIFICATIONS)
SRI	TORNADO SHELTER ROOM IDENTIFYING SIGNAGE SIGN INDICATION IN ACCORDANCE WITH ICC 500 - SECTION 504.1.2

SHELTER OCCUPANT CAPACITY

TORNADO SHELTER USABLE AREA

USABLE TORNADO SHELTER AREA CALCULATIONS

SHELTER SPACE	SQ. FT.	USABLE REDUCTION FACTOR	TOTAL USABLE SQ. FT.
CLASSROOMS (4)	3,044	0.65	1,979
CORRIDOR (1)	1,227	1.0	1,227
TOTAL USABLE AREA			3,206

TORNADO SHELTER OCCUPANT CAPACITY

TORNADO SHELTER OCCUPANT CAPACITY OF 600-700 OCCUPANTS WILL REQUIRE **4** WHEEL CHAIR SPACES (1 PER 200 OCCUPANTS).

SPACE FOR WHEEL CHAIR OCCUPANTS 4 x 10 SQ. FT. = 40 SQ. FT.

REMAINING AREA FOR NON WHEEL CHAIR OCCUPANTS 3,206 - 40 = 3,166 SF

MAXIMUM NUMBER OF STANDING OR SITTING OCCUPANTS:
3,166 SF / 5 SF PER PERSON = 633 OCCUPANTS.

TOTAL OCCUPANT CAPACITY OF TORNADO SHELTER = **637**

PLUMBING CALCULATIONS TORNADO SHELTER USE

637 OCCUPANTS

TOILET FIXTURES (TABLE 702.2) ICC 500
(2 TOILETS MINIMUM FOR THE FIRST 500 OCCUPANTS)
(1 PER EACH ADDITIONAL 500 OCC. OR FRACTION) **3** REQUIRED
7 PROVIDED

LAVATORIES (TABLE 702.2) ICC 500
(1 PER 1,000 OCC.) **1** REQUIRED **7** PROVIDED

TORNADO SHELTER CALCULATED OCCUPANT LOAD GROSS AREA OF INSTRUCTIONAL SPACE DIVIDED BY 30

INSTRUCTIONAL SPACE	AREA SQ. FT.	OCC. LOAD	X #	TOTAL OCC. LOAD
CLASSROOM 103	381	13	1	13
CLASSROOM 104	376	13	1	13
CLASSROOM 116	723	25	1	25
CLASSROOM 117	680	23	1	23
CLASSROOM 118	728	25	1	25
CLASSROOM 119	725	25	1	25
CLASSROOM 208	376	13	1	13
CLASSROOM 210	652	22	1	22
CLASSROOM 211	781	26	1	26
CLASSROOM 212	724	25	1	25
CLASSROOM 213	737	25	1	25
CLASSROOM 214	750	25	1	25
CLASSROOM 215	737	25	1	25
TOTAL STUDENT LOAD				285
ADD 10% FOR STAFF				29
TOTAL OCCUPANTS NEEDING SHELTER				314

CLASSROOM ADDITION
FOR
UNION HILL SCHOOL
SOMERVILLE, ALABAMA
FOR THE
MORGAN COUNTY BOARD OF EDUCATION

McKEE and ASSOCIATES
ARCHITECTS, INC.
631 SOUTH HULL STREET, MONTGOMERY, ALABAMA 36104 (334) 834-9833

STATE OF ALABAMA
WALTER T. MCKEE, JR.
NO. 1082
MONTGOMERY, ALA.
REGISTERED ARCHITECT

SHEET TITLE : TORNADO SHELTER PLAN

MCKEE JOB # : 22-134

DRAWN BY : VH

DATE: 10-13-2022

REVISED DATE:

REVISED DATE:

REVISED DATE:

SHEET NO. : G1.2

- Z:\2022\22-134 Classroom Addition for Union Hill School\CAD Drawings\Architectural\---G1.2 Shelter Plan.dwg
- Friday, October 14, 2022 10:54:20 AM

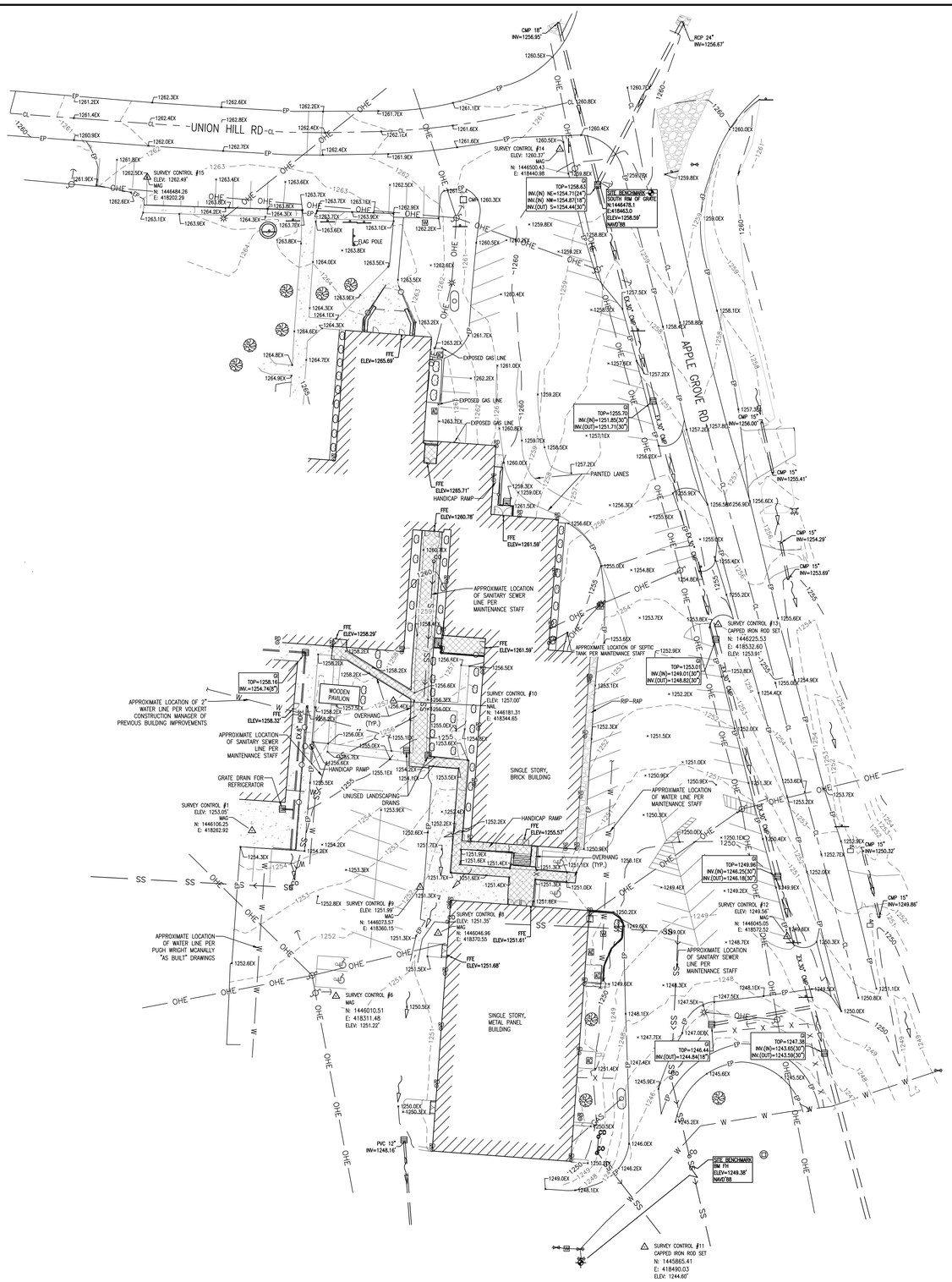

Survey Control Point Table (BASED ON STATE PLANE COORDINATE SYSTEM, ALABAMA EAST ZONE, NAD 1983)			
Point #	Northing	Easting	Description
1	1446106.250	418262.920	MAG
6	1446010.510	418311.480	MAG
8	1446046.960	418370.550	MAG
9	1446073.572	418360.146	MAG
10	1446181..309	418344.645	NAIL
12	1446045.048	418572.516	MAG
13	1446225.535	418532.596	SIRCT
14	1446500.428	418440.979	MAG
15	1446484.258	418202.290	MAG

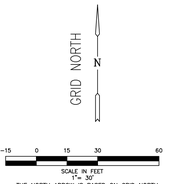

CERTIFICATE OF ACCURACY

THE ACCURACY OF THE MEASUREMENTS HAS BEEN SUBSTANTIATED BY THE COMPUTATION OF A CLOSED FIELD TRAVERSE, AND THE RELATIVE ERROR OF CLOSURE WAS NOT GREATER THAN 1:10,000.

FLOOD INFORMATION

I HAVE CONSULTED THE FEDERAL INSURANCE ADMINISTRATION FLOOD INSURANCE RATE MAPS PREPARED BY THE FEDERAL EMERGENCY MANAGEMENT AGENCY, IN COOPERATION WITH THE NATIONAL FEDERAL INSURANCE ADMINISTRATION, MAP NUMBER 01103C0280 F, DATED AUGUST 16, 2018, AND FOUND THAT THE PARCEL SHOWN HEREON ARE LOCATED IN FLOOD HAZARD ZONE(S) "X" (OUTSIDE ANY FLOOD HAZARD ZONE). THIS DETERMINATION HAS NOT BEEN VERIFIED WITH FIELD DATA, BUT MAP OVERLAYS ONLY.

SURVEYOR'S NOTES

1.) THIS IS A COMPOSITE SURVEY; ALL UTILITIES SHOWN HEREON ARE APPROXIMATE AND HAVE BEEN LOCATED BASED ON SURFACE EVIDENCE, EXISTING UTILITY MAPS, AND/OR FIELD LOCATIONS BY THE RESPECTIVE UTILITY COMPANIES OR THEIR REPRESENTATIVE. THIS SURVEY DOES NOT REFLECT THE PRESENCE OF ALL UNDERGROUND UTILITIES. ALL UNDERGROUND UTILITIES NEED TO BE VERIFIED BY THE CONTRACTOR BEFORE CONSTRUCTION.

2.) THERE WAS NO FIELD LOCATION ATTEMPTED TO DETERMINE THE EXTENT OF SUB-SURFACE STRUCTURES OR EAVE OVERHANGS, EXCEPT AS SHOWN.

3.) NO INSTRUMENTS OF RECORD REFLECTING EASEMENTS, RIGHTS-OF WAY, AND/OR OWNERSHIP WERE FURNISHED TO THE SURVEYOR, EXCEPT AS SHOWN.

4.) VERTICAL RELIEF INFORMATION WAS OBTAINED BASED ON FIELD MEASUREMENTS AND GPS OBSERVATION DATA, USING THE NAVD'88.

5.) THIS PARCEL WAS NOT ZONED AT THE TIME OF THIS SURVEY.

6.) LAND SURVEYORS, AS LICENSED PROFESSIONALS BY THE STATE OF ALABAMA, ARE NOT EXPERTS IN THE IDENTIFICATION OF WETLANDS, CEMETERIES OR BURIAL GROUNDS, ITEMS OF HISTORICAL OR CULTURAL SIGNIFICANCE, OR THE IDENTIFICATION OF ENVIRONMENTAL HAZARDS OR HAZARDOUS WASTE; NOR HAS ANY EVIDENCE OR DOCUMENTATION OF SAID AFOREMENTIONED ITEMS BEEN PROVIDED TO THE SURVEYOR. THEREFORE EXCEPTION IS TAKEN TO ANY SUCH MATTERS WHICH MAY EXIST ON THE SUBJECT PROPERTY.

7.) THE ADDRESS OF THE PROPERTY PER COUNTY TAX RECORDS IS 2221 UNION HILL ROAD, SOMERVILLE, AL.

8.) THIS IS A LIMITED TOPOGRAPHIC SURVEY ONLY AND IS NOT A BOUNDARY SURVEY, ANY BOUNDARY INFORMATION SHOWN HAS NOT BEEN FIELD VERIFIED AND IS FOR INFORMATION PURPOSES ONLY.

SURVEYOR'S CERTIFICATE

I, NATHAN G. JOHNSON, A REGISTERED LAND SURVEYOR, WITH THE FIRM OF JOHNSON AND ASSOCIATES, INC., HUNTSVILLE, ALABAMA HEREBY CERTIFY THAT ALL PARTS OF THIS SURVEY AND DRAWING HAVE BEEN COMPLETED IN ACCORDANCE WITH THE CURRENT REQUIREMENTS OF THE STANDARDS OF PRACTICE FOR SURVEYING IN THE STATE OF ALABAMA AS ADOPTED BY THE ALABAMA SOCIETY OF PROFESSIONAL LAND SURVEYORS.

ACCORDING TO THIS SURVEY, UNDER MY SUPERVISION.

Nathan G. Johnson, AL PLS #16690
njohnson@jaengineering.com

ALABAMA LICENSED No. 16690 PROFESSIONAL LAND SURVEYOR NATHAN G. JOHNSON

10/13/2022

VICINITY MAP



LEGEND

FENCE LINE	-X-X-X-
EDGE OF PAVEMENT	EP
BACK OF CURB	BC
OVERHEAD ELECTRIC	OHE
UNDERGROUND ELECTRIC	UGE
SANITARY SEWER	SS
GAS LINE	GAS
CENTERLINE	CL
WATER LINE	W
FIBER OPTIC CABLE	FOC
COMMUNICATION	COM
STORM DRAINAGE PIPE	
TREE LINE	
UTILITY POLE	
LIGHT POLE	
GUY WIRE	
ELECTRICAL CABINET	E
LANDSCAPE LIGHT	
MAIL BOX	
TRANSFORMER	
WATER VALVE	
WATER METER	
IRRIGATION VALVE	
FIRE HYDRANT	
TELEPHONE RISER	
UNDERGROUND COM MARKER	
SANITARY SEWER MANHOLE	SMH
SANITARY CLEANOUT	
JUNCTION BOX	JB
OPEN THROAT INLET	OTI
DOUBLE WING CURB INLET	DWCI
SINGLE WING CURB INLET	SWCI
GRATE INLET	GI
PROPANE GAS TANK	
FLOW ARROW	
GAS VALVE	
STUB PIPE	
ROOF DRAIN	
AIR CONDITIONER	
SIGN	
LOT NUMBER	(L)
REINFORCED CONC. PIPE	RCP
POLYVINYL CHLORIDE	PVC
REGULAR PARKING SPACES	(R)
SURVEY CONTROL POINT	
MEASURED	(M)
RECORD	(R)
DEED	(D)
PLAT	(P)
FINISH FLOOR ELEVATION	FFE
RIGHT-OF-WAY	R.O.W
BENCHMARK	
CONCRETE MONUMENT FOUND	
PROPERTY CORNER FOUND	
PROPERTY CORNER SET 1/2-INCH REBAR SET WITH YELLOW CAP STAMPED "JOHNSON CA-0193LS"	
CONIFEROUS TREE	
DECIDUOUS TREE	
EXISTING CONTOURS	795
SPOT ELEVATION	x 728.5EX
UTILITY & DRAINAGE EASEMENT	U & D
DIRT	
CONCRETE	
RIP-RAP	
PROPERTY LINE	
FLAG POLE	

CLASSROOM ADDITION
FOR
UNION HILL SCHOOL
SOMERVILLE, ALABAMA
FOR THE
MORGAN COUNTY BOARD OF EDUCATION

JOHNSON & ASSOCIATES
ENGINEERING
SURVEYING
1216 CHURCH STREET
HUNTSVILLE, ALABAMA 35801
1-256-533-7331
FAX 1-256-533-7332

McKEE and ASSOCIATES
ARCHITECTS, INC.
631 SOUTH HULL STREET . MONTGOMERY, ALABAMA 36104 (334) 834-9933

SHEET TITLE : LIMITED TOPOGRAPHIC SURVEY

MCKEE JOB # : 22-134 / J&A 1949EN

DRAWN BY : RG

DATE: FIELD 3.23.2022
OFFICE 10.13.2022

REVISED DATE:

REVISED DATE:

REVISED DATE:

SHEET NO. : C1.0

- T:\SURVEY\1949-SR Union Hill Jr High Lim. Topo\Survey\1949-SR UNION HILL JR HIGH LIM. TOPO.dwg
- Thursday, October 13, 2022 5:20:22 PM

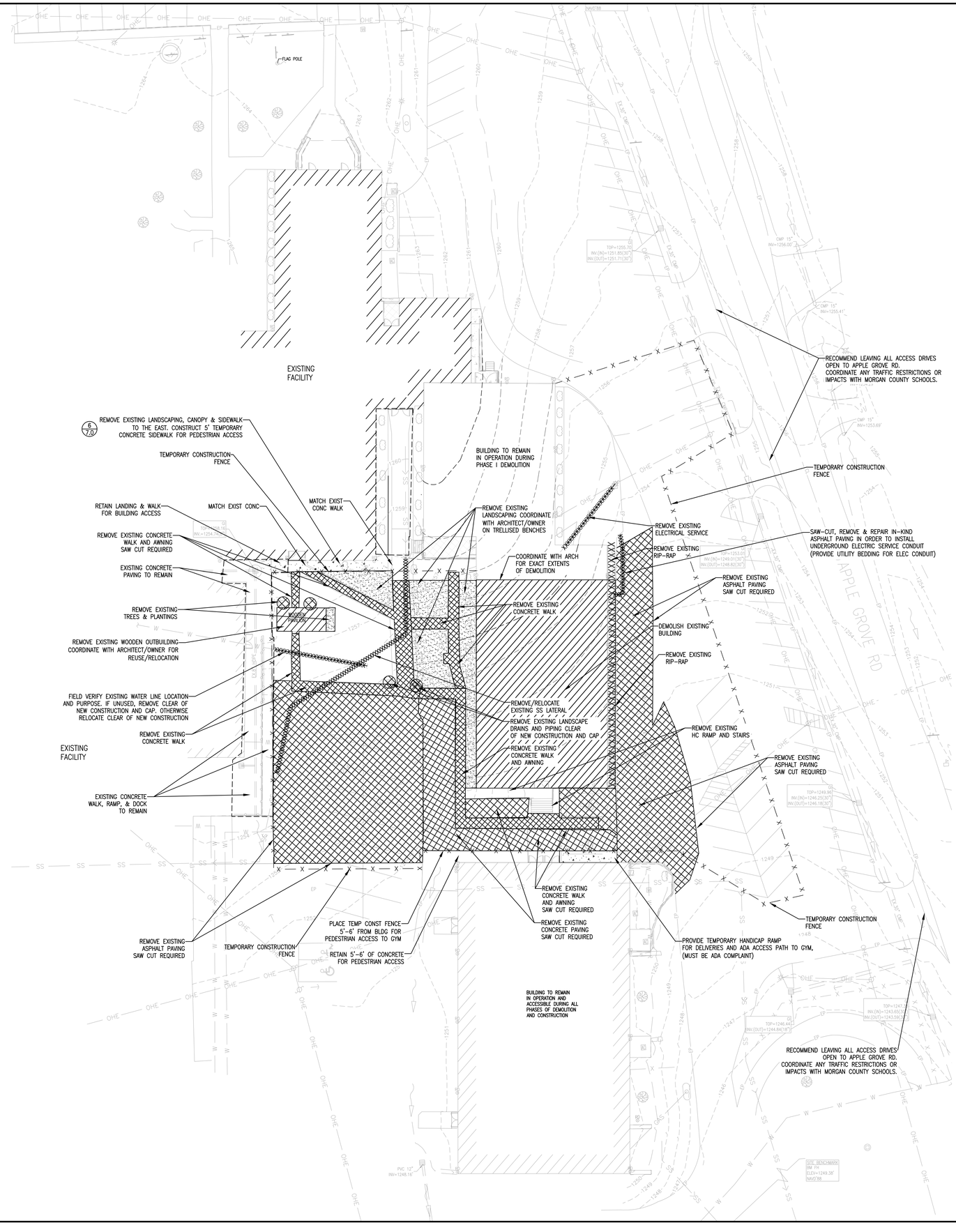

DEMOLITION LEGEND

X X X X	REMOVE EXISTING CURB & GUTTER, FENCE AND PIPES
	REMOVE EXISTING LANDSCAPE AREA, GRAVEL AND SOIL
	REMOVE EXISTING CONCRETE, ASPHALT OR STRUCTURE
	DEMOLISH BUILDING
	REMOVE EXISTING TREE OR SIGN
	PRESERVE EXISTING TREE OR FACILITY

NOTES

1. CONTRACTOR IS RESPONSIBLE FOR AND SHOULD VERIFY THE LOCATION OF ALL UNDERGROUND UTILITIES PRIOR TO CONSTRUCTION. ALL BURIED UTILITIES MAY NOT HAVE BEEN LOCATED DURING THE TOPOGRAPHIC SURVEY. UTILITIES SHOWN HEREON ARE APPROXIMATE AND MAY NOT REFLECT THE ACTUAL FIELD LOCATION OR THE PRESENCE OF OTHER UNDERGROUND UTILITIES.
2. EXCAVATION TRENCHES FOR ALL REMOVED UNDERGROUND UTILITIES SHALL BE BACKFILLED IN ACCORDANCE WITH CIVIL SITE DETAILS FOR UNDERGROUND UTILITIES IN TRAFFIC AREAS.
3. CAUTION: CONTRACTOR SHALL EXERCISE EXTREME CAUTION WHEN WORKING ABOVE AND AROUND EXISTING UTILITIES.
4. ALL DEBRIS SHOULD BE HAULED OFF AND DISPOSED IN ACCORDANCE WITH ALL APPLICABLE STATE AND/OR LOCAL RULES AND REGULATIONS.
5. CONTRACTOR TO STRIP ALL TOPSOIL IN THE AREA OF THE NEW CONSTRUCTION. STOCKPILE ENOUGH TOPSOIL TO RESPREAD 9" TO 12" OF TOPSOIL IN OPEN SPACE AREAS AND LANDSCAPE AREAS IN AND AROUND THE IMPROVED AREA. ALL EXCESS TOPSOIL SHALL BE REMOVED FROM THE SITE.
6. ADDITIONAL UNDERCUT MAY BE REQUIRED IN THE AREA OF THE NEW CONSTRUCTION DUE TO POOR SOIL CONDITIONS. CONTRACTOR SHOULD SEE GEOTECHNICAL REPORT FOR RECOMMENDATIONS AND SOILS REPORT FOR THE SITE. IF POOR SOILS OR OTHER UNEXPECTED CONDITIONS ARE ENCOUNTERED THAT WERE NOT COVERED IN THE SOILS REPORT, THEN THE CONTRACTOR SHOULD CONTACT THE PROJECT CIVIL ENGINEER AND THE PROJECT GEOTECHNICAL ENGINEER TO DISCUSS OPTIONS FOR REMEDIATION AND TO DETERMINE IF A CHANGE ORDER IS WARRANTED TO ADDRESS THE CHANGED FIELD CONDITION.
7. CONTRACTOR SHALL PROVIDE ADEQUATE TRAFFIC CONTROL MEASURES IN ACCORDANCE WITH THE LATEST MANUAL OF UNIFORM TRAFFIC CONTROL DEVICES FOR AREAS WHERE VEHICLE ARE ENTERING PUBLIC ROADWAYS AND TO RESTRICT PEDESTRIAN AND VEHICULAR TRAFFIC FROM ENTERING THE WORK ZONE DURING CONSTRUCTION. THE CONTRACTOR SHALL BE RESPONSIBLE FOR JOBSITE SAFETY THROUGHOUT THE DURATION OF THE PROJECT.
8. COORDINATE WITH ARCHITECT/OWNER ON REUSE OR DISPOSITION OF EXISTING SIDEWALK AWNINGS.

Know what's **below.** **Call** before you dig.

CLASSROOM ADDITION
FOR
UNION HILL SCHOOL
SOMERVILLE, ALABAMA
FOR THE
MORGAN COUNTY BOARD OF EDUCATION

JOHNSON & ASSOCIATES SURVEYING
1218 CHURCH STREET
DECATUR, ALABAMA 35601
PH 1-256-353-7331
FAX 1-256-353-7332

McKEE and ASSOCIATES
ARCHITECTS, INC.
631 SOUTH HULL STREET . MONTGOMERY . ALABAMA 36104 (334) 834-9933

ALABAMA REGISTERED PROFESSIONAL ENGINEER
REGISTERED NO. 16690
NATHAN G. JOHNSON
10/13/2022

SHEET TITLE : DEMOLITION PLAN (PHASE I)

MCKEE JOB # : 22-134 / J&A 1949EN

DRAWN BY : RG

DATE: 10.13.2022

REVISED DATE:

REVISED DATE:

REVISED DATE:

SHEET NO. : C2.0

- T:\SubSite\1949EN_Union Hill Jr High Addition for McKee Architects\Civil 3D Design\Production Drawings\1949EN_C200_DEMOLITION PLAN.Dwg
- Thursday, October 13, 2022 5:12:39 PM

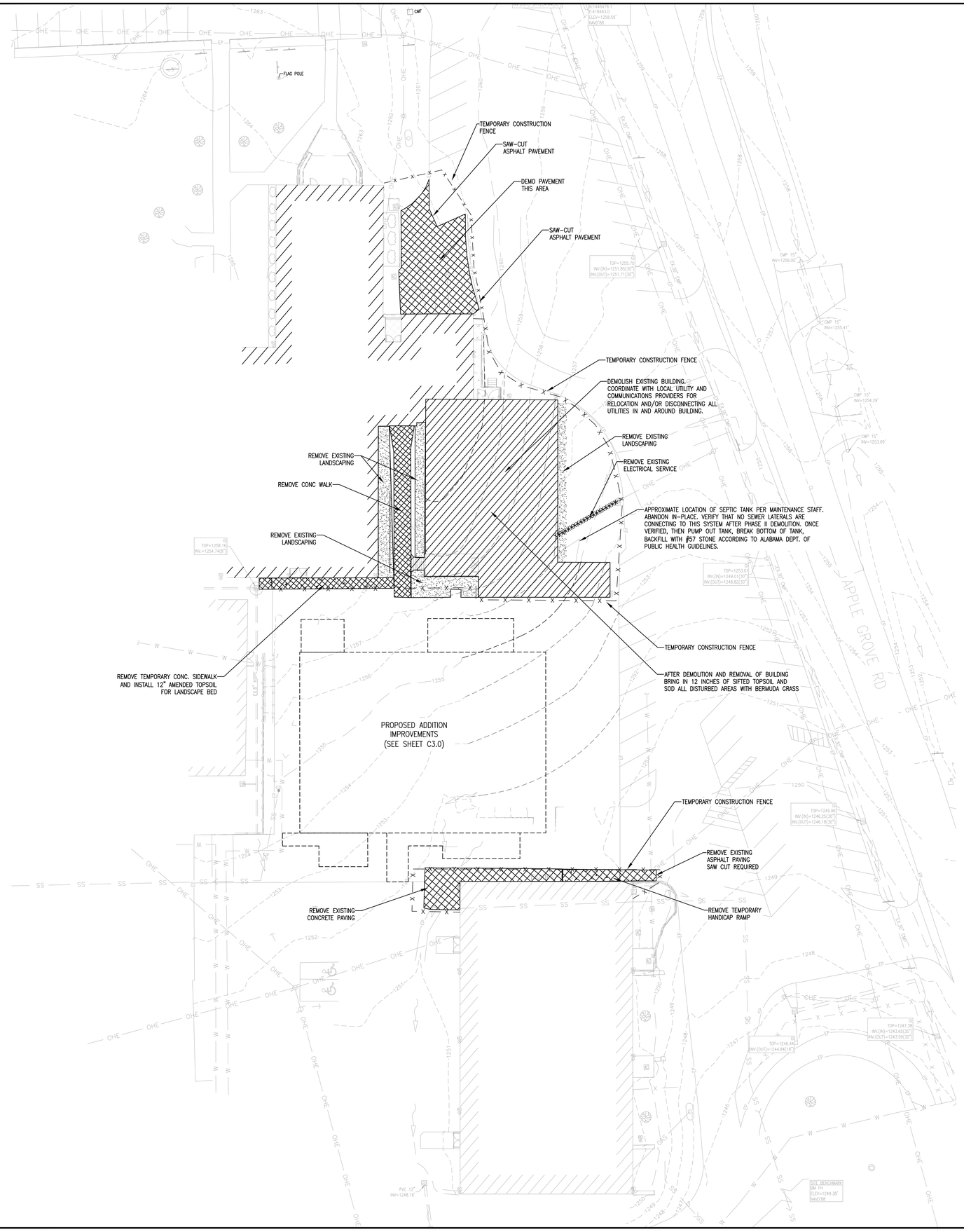

DEMOLITION LEGEND

X X X X	REMOVE EXISTING CURB & GUTTER, FENCE AND PIPES
	REMOVE EXISTING LANDSCAPE AREA, GRAVEL AND SOIL
	REMOVE EXISTING CONCRETE, ASPHALT OR STRUCTURE
	DEMOLISH BUILDING
	REMOVE EXISTING TREE OR SIGN
	PRESERVE EXISTING TREE OR FACILITY

NOTES

1. CONTRACTOR IS RESPONSIBLE FOR AND SHOULD VERIFY THE LOCATION OF ALL UNDERGROUND UTILITIES PRIOR TO CONSTRUCTION. ALL BURIED UTILITIES MAY NOT HAVE BEEN LOCATED DURING THE TOPOGRAPHIC SURVEY. UTILITIES SHOWN HEREON ARE APPROXIMATE AND MAY NOT REFLECT THE ACTUAL FIELD LOCATION OR THE PRESENCE OF OTHER UNDERGROUND UTILITIES.
2. EXCAVATION TRENCHES FOR ALL REMOVED UNDERGROUND UTILITIES SHALL BE BACKFILLED IN ACCORDANCE WITH CIVIL SITE DETAILS FOR UNDERGROUND UTILITIES IN TRAFFIC AREAS.
3. CAUTION: CONTRACTOR SHALL EXERCISE EXTREME CAUTION WHEN WORKING ABOVE AND AROUND EXISTING UTILITIES.
4. ALL DEBRIS SHOULD BE HAULED OFF AND DISPOSED IN ACCORDANCE WITH ALL APPLICABLE STATE AND/OR LOCAL RULES AND REGULATIONS.
5. CONTRACTOR TO STRIP ALL TOPSOIL IN THE AREA OF THE NEW CONSTRUCTION. STOCKPILE ENOUGH TOPSOIL TO RESPREAD 9" TO 12" OF TOPSOIL IN OPEN SPACE AREAS AND LANDSCAPE AREAS IN AND AROUND THE IMPROVED AREA. ALL EXCESS TOPSOIL SHALL BE REMOVED FROM THE SITE.
6. ADDITIONAL UNDERCUT MAY BE REQUIRED IN THE AREA OF THE NEW CONSTRUCTION DUE TO POOR SOIL CONDITIONS. CONTRACTOR SHOULD SEE GEOTECHNICAL REPORT FOR RECOMMENDATIONS AND SOILS REPORT FOR THE SITE. IF POOR SOILS OR OTHER UNEXPECTED CONDITIONS ARE ENCOUNTERED THAT WERE NOT COVERED IN THE SOILS REPORT, THEN THE CONTRACTOR SHOULD CONTACT THE PROJECT CIVIL ENGINEER AND THE PROJECT GEOTECHNICAL ENGINEER TO DISCUSS OPTIONS FOR REMEDIATION AND TO DETERMINE IF A CHANGE ORDER IS WARRANTED TO ADDRESS THE CHANGED FIELD CONDITION.
7. CONTRACTOR SHALL PROVIDE ADEQUATE TRAFFIC CONTROL MEASURES IN ACCORDANCE WITH THE LATEST MANUAL OF UNIFORM TRAFFIC CONTROL DEVICES FOR AREAS WHERE VEHICLE ARE ENTERING PUBLIC ROADWAYS AND TO RESTRICT PEDESTRIAN AND VEHICULAR TRAFFIC FROM ENTERING THE WORK ZONE DURING CONSTRUCTION. THE CONTRACTOR SHALL BE RESPONSIBLE FOR JOBSITE SAFETY THROUGHOUT THE DURATION OF THE PROJECT.
8. COORDINATE WITH ARCHITECT/OWNER ON REUSE OR DISPOSITION OF EXISTING SIDEWALK AWNINGS.

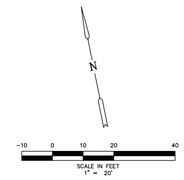

811 Know what's **below.** **Call** before you dig.

CLASSROOM ADDITION
FOR
UNION HILL SCHOOL
SOMERVILLE, ALABAMA
FOR THE
MORGAN COUNTY BOARD OF EDUCATION

JOHNSON & ASSOCIATES ENGINEERING SURVEYING
1218 CHURCH STREET
DECATUR, ALABAMA 35601
PH 1-256-353-7331
FAX 1-256-353-7332

McKEE and ASSOCIATES
ARCHITECTS, INC.
631 SOUTH HULL STREET, MONTGOMERY, ALABAMA 36104 (334) 834-9933



SHEET TITLE : DEMOLITION PLAN (PHASE II)

MCKEE JOB # : 22-134 / J&A 1949EN

DRAWN BY : RG

DATE: 10.13.2022

REVISED DATE:

REVISED DATE:

REVISED DATE:

SHEET NO. : C2.1

- T:\SubSite\1949EN, Union Hill Jr High Addition for McKee Architects\Civil 3D Design\Production Drawings\1949EN_C200_DEMOLITION PLAN.Dwg
- Thursday, October 13, 2022 5:12:52 PM

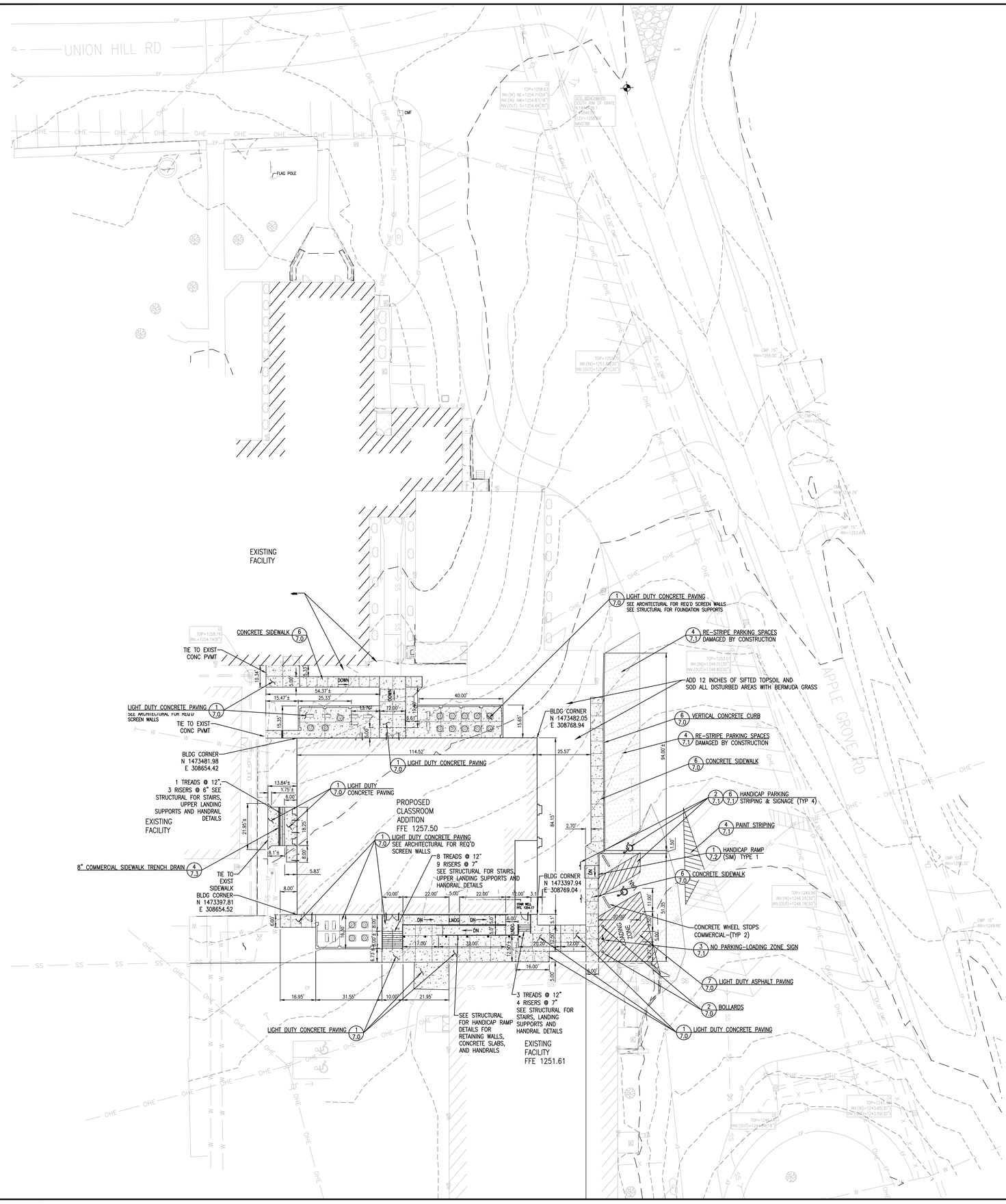

LEGEND

FENCE	—x—x—
EDGE OF PAVEMENT	EP
BACK OF CURB	BC
OVERHEAD ELECTRIC LINE	OHE
UNDERGROUND ELECTRIC LINE	UGE
SANITARY SEWER LINE	SS
GAS LINE	GAS
CENTERLINE OF ROAD	C/L
UNDERGROUND WATER LINE	W
UTILITY POLE	
LIGHT	
GUY WIRE	
ELECTRIC CABINET	
WATER VALVE	
WATER METER	
FIRE HYDRANT	
TELEPHONE RISER	
GAS METER	
GAS VALVE	
CABLE TV RISER	
SANITARY SEWER MANHOLE	
SANITARY CLEANOUT	
STORM SEWER MANHOLE	
OPEN THROAT INLET	
GRATE INLET	
SINGLE WING CURB INLET	
DOUBLE WING CURB INLET	
FLOW ARROW	
REINFORCED CONC. PIPE	RCP
POLYVINYL CHLORIDE	PVC
IRRIGATION CONTROL VALVE	
ROOF DRAIN	
SIGN	
LANDSCAPE LIGHTING	
AIR CONDITIONER	
BEACON LIGHTS	
UTILITY & DRAINAGE ESM'T	U & D
FLAG POLE	
SHRUB	
CONIFEROUS TREE	
DECIDUOUS TREE	
TREE	
RIGHT-OF-WAY	R.O.W.
1/2"CAPPED-IRON-PIN-SET STAMPED"JOHNSON-CA0193LS"	●
PROPERTY COR. FOUND	○
FOUND CONC. MONUMENT	□
MEASURED	(M)
DEED	(D)
PLAT	(P)
LOT NUMBER	(1)
FINISH FLOOR ELEV.	FFE
BENCHMARK	
EXISTING CONTOURS	205
SPOT ELEVATION	x 728.56x
GRAVEL	
BRICK PAVERS	
CONCRETE	

NOTES:

1. THIS PROPERTY IS LOCATED IN THE SE ¼ OF SECTION 34, TOWNSHIP 6 SOUTH, RANGE 1 WEST, WITHIN THE LIMITS OF MORGAN COUNTY, ALABAMA AND CONTAINS APPROXIMATELY 15.0 ACRES.
2. THE ADDRESS FOR THIS PROPERTY IS 2221 UNION HILL ROAD, SOMERVILLE, AL 35670.
3. THIS PROPERTY IS CURRENTLY NOT ZONED.
4. ALL DIMENSIONS ARE GIVEN TO THE BACK OF CURB UNLESS OTHERWISE SHOWN.
5. CONTRACTOR SHOULD VERIFY THE LOCATIONS OF ALL UNDERGROUND UTILITIES PRIOR TO CONSTRUCTION, UTILITIES SHOWN HEREON ARE APPROXIMATE AND MAY NOT REFLECT THE ACTUAL FIELD LOCATION OR THE PRESENCE OF OTHER UNDERGROUND UTILITIES.
6. IF ADVERSE CONDITIONS ON-SITE ARE UNCOVERED DURING CONSTRUCTION, THE DESIGN ENGINEER MUST BE NOTIFIED IN WRITING IMMEDIATELY. THE DESIGN ENGINEER MAY REQUIRE MODIFICATION OF THESE PLANS TO THE EXTENT NECESSARY TO ASSURE COMPLIANCE WITH THE LOCAL AUTHORITY'S CONSTRUCTION SPECIFICATIONS MANUAL.
7. ALL TRAFFIC CONTROL DEVICES SHALL BE ERECTED AND MAINTAINED IN CONFORMANCE WITH THE MANUAL ON UNIFORM TRAFFIC CONTROL DEVICES, LATEST EDITION.
8. THE LOT IS LOCATED IN ZONE "X", ACCORDING TO A MAP OVERLAY OF THE FEDERAL INSURANCE RATE MAP COMMUNITY PANEL NO. 01103C0280F, DATED AUGUST 16, 2018.
9. TRENCH SAFETY SYSTEMS TO MEET, AS A MINIMUM, THE REQUIREMENTS OF OSHA SAFETY AND HEALTH REGULATION PART 1926.
10. CONSTRUCTION SPECIFICATIONS FOR WATER AND SANITARY SEWER, THE LATEST EDITION AS ADOPTED BY THE LOCAL UTILITY PROVIDER OR THE MORGAN COUNTY ENGINEERING DEPARTMENT, ARE HEREBY MADE A PART OF THESE DRAWINGS.
11. Q10 IS THE PEAK STORM WATER RUNOFF ASSOCIATED WITH A TYPE ii, 10-YEAR STORM EVENT BASED ON THE RATIONAL EQUATION. THE SITE STORM WATER SYSTEM IS DESIGNED FOR THE 10-YEAR STORM EVENT.
12. A TREE REMOVAL PERMIT MAY BE REQUIRED. THE CONTRACTOR SHALL OBTAIN SUCH PERMIT, IF REQUIRED
13. SITE SHALL BE GRADED SO THAT RUN-OFF WILL BE DIRECTED TO THE STREET OR TO DRAINAGE WAYS IN A DEDICATED EASEMENT.
14. CONTRACTOR SHALL CONTACT ALABAMA ONE CALL AT 811 FOR UTILITY LOCATIONS PRIOR TO ANY SITE EXCAVATION.
15. CONTRACTOR MAY BE REQUIRED TO SCHEDULE A PRE-CONSTRUCTION MEETING WITH MORGAN COUNTY ENGINEERING DEPARTMENT AND THE LOCAL UTILITIES PROVIDER BEFORE COMMENCEMENT OF WORK.
16. IF APPROVAL FROM ANY STATE OR FEDERAL REGULATORY AGENCY IS REQUIRED TO PERFORM WORK ON THIS PROJECT, A COPY OF EACH PERMIT REQUIRED SHALL BE DELIVERED TO THE MORGAN COUNTY ENGINEERING DEPARTMENT PRIOR TO THE APPROVAL OF SAID PLANS.

Know what's **below.**
Call before you dig.

CLASSROOM ADDITION
FOR
UNION HILL SCHOOL
SOMERVILLE, ALABAMA
FOR THE
MORGAN COUNTY BOARD OF EDUCATION

JOHNSON & ASSOCIATES SURVEYING
1218 CHURCH STREET
DECATUR, ALABAMA 35601
TEL 1-256-353-7331
FAX 1-256-353-7332

McKEE and ASSOCIATES
ARCHITECTS, INC.
631 SOUTH HULL STREET . MONTGOMERY . ALABAMA 36104 (334) 834-9933

ALABAMA REGISTERED PROFESSIONAL ENGINEER
REGISTERED NO. 16690
NATHAN C. GORDON
10/13/2022

SHEET TITLE : DIMENSION PLAN

MCKEE JOB # : 22-134 / J&A 1949EN

DRAWN BY : RG

DATE: 10.13.2022

REVISED DATE:

REVISED DATE:

REVISED DATE:

SHEET NO. : C3.0

- T:\SubSite\1949EN_Union Hill Jr High Addition for McKee Architects\Civil 3D Design\Production Drawings\1949EN_C300_DIMENSION PLAN.Dwg
- Thursday, October 13, 2022 5:14:40 PM

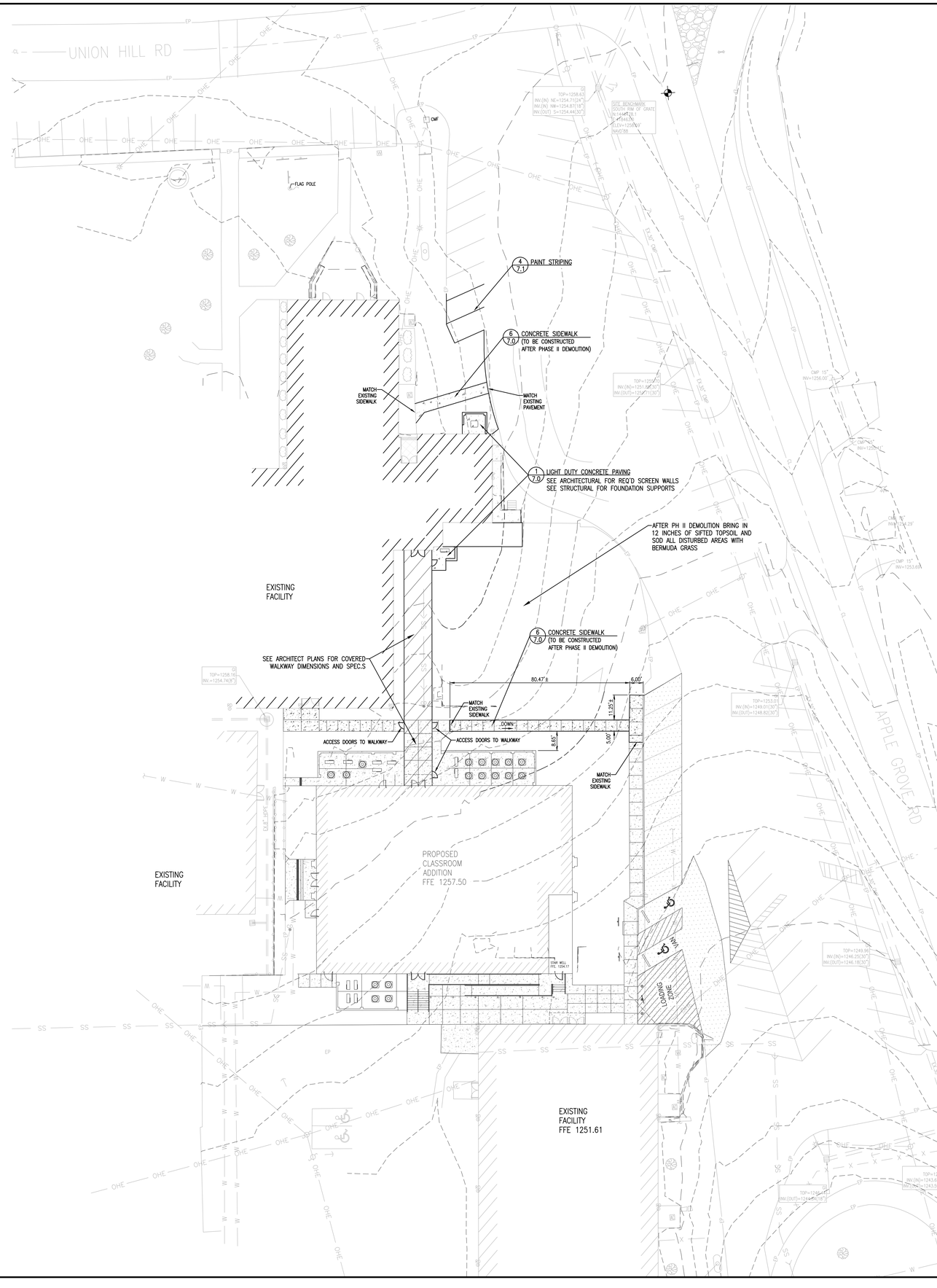

LEGEND

FENCE	x x
EDGE OF PAVEMENT	EP
BACK OF CURB	BC
OVERHEAD ELECTRIC LINE	OHE
UNDERGROUND ELECTRIC LINE	UGE
SANITARY SEWER LINE	SS
GAS LINE	GAS
CENTERLINE OF ROAD	C/L
UNDERGROUND WATER LINE	W
UTILITY POLE	
LIGHT	
GUY WIRE	
ELECTRIC CABINET	
WATER VALVE	
WATER METER	
FIRE HYDRANT	
TELEPHONE RISER	
GAS METER	
GAS VALVE	
CABLE TV RISER	
SANITARY SEWER MANHOLE	
SANITARY CLEANOUT	
STORM SEWER MANHOLE	
OPEN THROAT INLET	
GRATE INLET	
SINGLE WING CURB INLET	
DOUBLE WING CURB INLET	
FLOW ARROW	
REINFORCED CONC. PIPE	RCP
POLYVINYL CHLORIDE	PVC
IRRIGATION CONTROL VALVE	
ROOF DRAIN	
SIGN	
LANDSCAPE LIGHTING	
AIR CONDITIONER	
BEACON LIGHTS	
UTILITY & DRAINAGE ESM'T	U & D
FLAG POLE	
SHRUB	
CONIFEROUS TREE	
DECIDUOUS TREE	
TREE	
RIGHT-OF-WAY	R.O.W.
1/2"CAPPED-IRON-PIN-SET STAMPED"JOHNSON-CA0193LS"	●
PROPERTY COR. FOUND	○
FOUND CONC. MONUMENT	□
MEASURED	(M)
DEED	(D)
PLAT	(P)
LOT NUMBER	(1)
FINISH FLOOR ELEV.	FFE
BENCHMARK	
EXISTING CONTOURS	100
SPOT ELEVATION	x 728.56x
GRAVEL	
BRICK PAVERS	
CONCRETE	

811 Know what's **below.** **Call** before you dig.

CLASSROOM ADDITION
FOR
UNION HILL SCHOOL
SOMERVILLE, ALABAMA
FOR THE
MORGAN COUNTY BOARD OF EDUCATION

JOHNSON & ASSOCIATES
ENGINEERING SURVEYING
1218 CHURCH STREET
DECATUR, ALABAMA 35601
PH 1-256-353-7331
FAX 1-256-353-7332

McKEE and ASSOCIATES
ARCHITECTS, INC.
631 SOUTH HULL STREET, MONTGOMERY, ALABAMA 36104 (334) 834-9933

STATE OF ALABAMA
LICENSED PROFESSIONAL ENGINEER
REGISTERED NO. 18690
ENGINEER
NATHAN G. JOHNSON
10/13/2022

SHEET TITLE : DIMENSION PLAN

MCKEE JOB # : 22-134 / J&A 1949EN

DRAWN BY : RG

DATE: 10.13.2022

REVISED DATE:

REVISED DATE:

REVISED DATE:

SHEET NO. : C3.1

- T:\SubSite\1949EN, Union Hill Jr High Addition for McKee Architects\Civil 3D Design\Production Drawings\1949EN_C300_DIMENSION PLAN.Dwg
- Thursday, October 13, 2022 5:14:49 PM

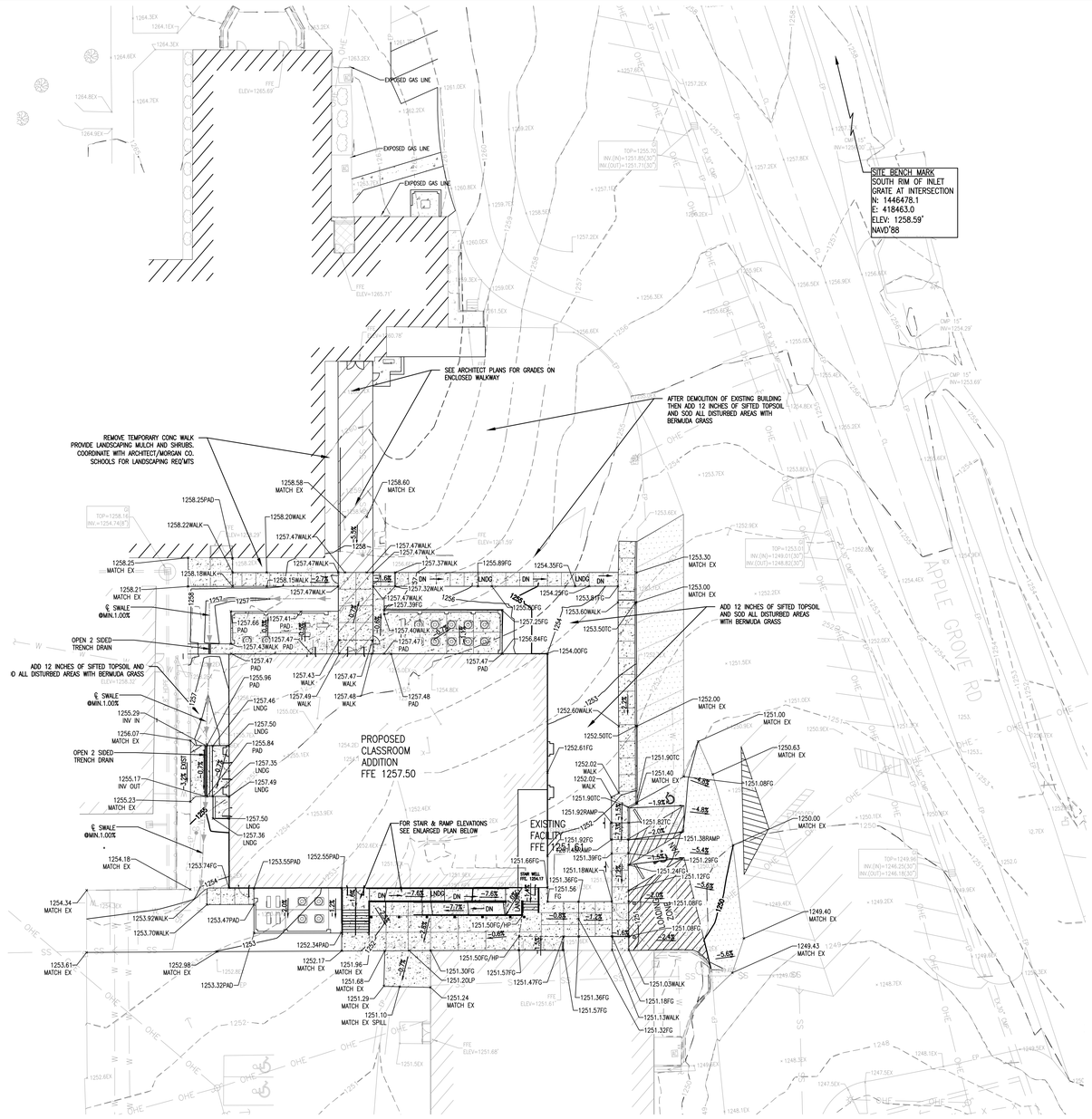

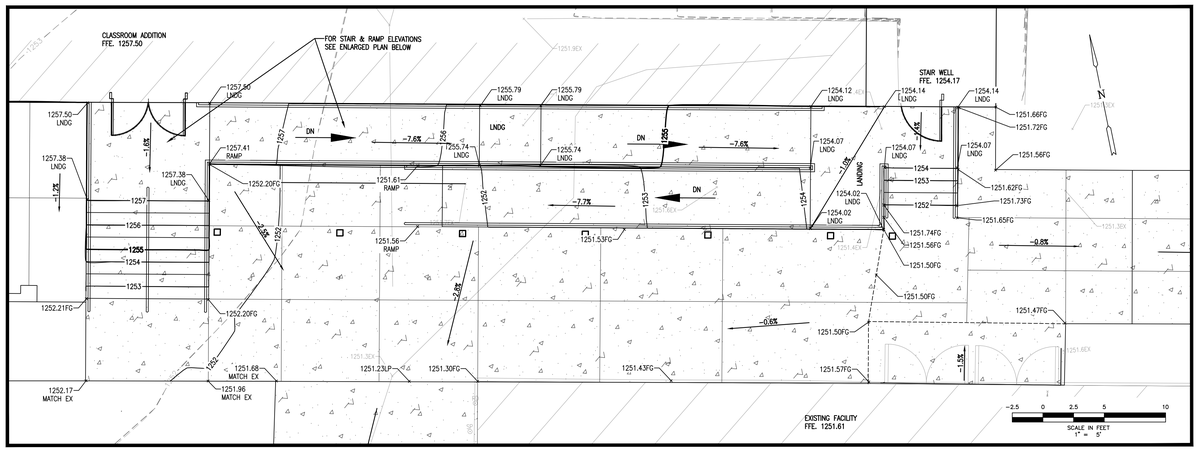

ENLARGED PLAN
SCALE: 1" = 5'

GRADING NOTES:

1. THE DISTURBED AREA FOR THIS PROJECT IS 0.71 ACRES, THEREFORE AN ADEM/NPDES PERMIT WILL NOT BE REQUIRED.

2. A CONSTRUCTION PERMIT SHALL BE REQUIRED FROM MORGAN COUNTY ENGINEERING DIVISION BEFORE CONSTRUCTION BEGINS.

3. THE CONTRACTOR WILL BE RESPONSIBLE FOR CLEANING DIRT AND DEBRIS FROM THE ADJOINING STREET DURING CONSTRUCTION. ANY DAMAGE TO THE EXISTING STREET MUST BE REPAIRED BY THE CONTRACTOR DURING THIS PROJECT.

4. NO CHANGES SHALL BE MADE TO THESE APPROVED PLANS WITHOUT THE ENGINEER OF RECORD BEING NOTIFIED BEFORE CHANGES ARE MADE, AND THE ENGINEER OF RECORD ACQUIRING APPROVAL FROM THE CITY ENGINEER.

5. ALL ROOF DRAINS AND DOWNSPOUTS SHOULD DISCHARGE ONTO SPLASH PADS AND SURFACE DRAIN CLEAR OF NEW FACILITY.

6. ALL SUBGRADES SHALL BE COMPACTED IN ACCORDANCE WITH THE DETAILS AND SPECIFICATIONS NOTED ON SHEET C7.0. CONTACT THE PROJECT GEOTECHNICAL ENGINEER AND/OR THE PROJECT CIVIL SITE ENGINEER WHEN ANY POOR SOILS ARE ENCOUNTERED TO DETERMINE WHAT OPTIONS MAY BE NEEDED TO REMEDIATE, AND TO DETERMINE ANY AMOUNTS OWED AS A CHANGED FIELD CONDITION.

7. ONCE ALL SUBGRADE ELEVATIONS OUTSIDE OF THE BUILDING FOOTPRINT HAVE BEEN COMPLETED, THEN THE SITE CONTRACTOR SHALL CONTACT THE PROJECT CIVIL SITE ENGINEER TO SCHEDULE A "PROOF-ROLL" INSPECTION IN ACCORDANCE WITH MORGAN COUNTY GUIDELINES FOR SUBDIVISION ROADWAYS. NO PAVEMENT CAN BE LAID UNTIL THE SUBGRADE AND D.G.A. BASE HAS BEEN APPROVED BY THE CIVIL SITE ENGINEER AND UPON THE SITE "PASSING" PROPER COMPACTION REQUIREMENTS AS PER CITY OF HUNTSVILLE STANDARDS.

8. MODULAR RETAINING WALLS SHALL MEET MANUFACTURER'S SPECIFICATIONS FOR GEOGRID FABRIC AND FRENCH DRAINS. BACKFILL IMMEDIATELY BEHIND THE WALLS SHALL BE GRAVEL. FOUR INCHES(4") PERFORATED PIPE(S), UNLESS OTHERWISE NOTED ON PLANS, WRAPPED IN FABRIC SHALL BE PLACED BEHIND THE WALL, RUN THE FULL LENGTH OF THE WALL, AND DAYLIGHT AT THE ENDS (OR AT DRAINAGE STRUCTURES AT THE ENDS).

9. CONTRACTOR TO UNDERCUT TO ACCEPTABLE SOILS AND BACKFILL WITH STONE BASE COURSE ALDOT NO. 825B (COMPACTRED TO 100% STANDARD PROCTOR AS PER AASHTO T-99).

10. IF A DISCREPANCY ARISES BETWEEN THE DRAWINGS AND FIELD CONDITION, OR WHERE A DETAIL IS DOUBTFUL OF INTERPRETATION, OR AN UNANTICIPATED FIELD CONDITION IS ENCOUNTERED, THE ENGINEER OF RECORD SHALL BE NOTIFIED RIGHT AWAY TO DISCUSS THE ISSUE. ANY INSTRUCTIONS OR CLARIFICATIONS SHALL BE CONFIRMED IN WRITING AND DISTRIBUTED TO ALL AFFECTED PARTIES.

11. WHEREVER THERE IS A CONFLICT BETWEEN DETAILS AND SPECIFICATIONS, OR BETWEEN DETAILS, OR WHERE DOUBTFUL OF INTERPRETATIONS, THE MOST RESTRICTIVE SHALL GOVERN AS DETERMINED BY THE ENGINEER OF RECORD.

12. TRENCH SAFETY SYSTEMS TO MEET, AS MINIMUM, THE LATEST REQUIREMENTS OF OSHA SAFETY AND HEALTH, REGULATION PART 1926, SUBPART P.

13. COMPACTION FOR THE BUILDING FOOTING TO MEET THE ARCHITECT'S PLANS OR GEOTECHNICAL ENGINEER'S REQUIREMENTS, THE MOST RESTRICTIVE SHALL GOVERN AS DETERMINED BY THE ENGINEER OF RECORD.

14. ALL SLOPES, DITCHES, SWALES, AND DETENTION PONDS, AS WELL AS DISTURBED AREAS INSIDE OF THE RIGHT-OF-WAY AND DRAINAGE EASEMENTS ARE TO BE FULLY SODDED.

15. ALL OTHER DISTURBED AREAS SHALL BE SEEDED AND HAVE WHEAT STRAW SPREAD OUT AS SOON AS POSSIBLE TO PREVENT EROSION.

16. ALL DISTURBED AREAS SHALL HAVE A FULL STAND OF GRASS PRIOR TO ISSUANCE OF CERTIFICATE OF OCCUPANCY.

17. CONTRACTOR IS TO CONTACT MORGAN COUNTY ENGINEERING DEPARTMENT (256-773-5297) TO COORDINATE THE INSPECTION AND INSTALLATION OF STORM PIPING AND INLETS WITHIN RIGHT OF WAY OR UTILITY AND DRAINAGE EASEMENTS.

LEGEND

U & D R.O.W.	UTILITY & DRAINAGE ESM'T RIGHT-OF-WAY
℄	CENTERLINE ROAD
EP	EDGE OF PAVEMENT
OHE	OVERHEAD ELEC.
	ELECTRIC POLE
4:1	PROPOSED FINISH GRADE SLOPE
RCP	PROPOSED GRATE INLET
HDPE	REINFORCED CONC. PIPE HIGH-DENSITY POLYETHYLENE
	DRAINAGE FLOW ARROW
3	STORM STRUCTURE NUMBER
	BENCHMARK
795	PROPOSED CONTOURS
795	EXISTING CONTOURS
X 728.35	SPOT ELEVATION
SWCI	SINGLE WING S-TYPE INLET
DWCI	DOUBLE WING S-TYPE INLET
FL	FLOWLINE
JB	JUNCTION BOX
OTI	OPEN THROAT WEIR INLET
TC	TOP OF CURB/CONCRETE
FG	FINISH GRADE
CL	CENTERLINE
HP	HIGH POINT
LP	LOW POINT
RD	PROPOSED ROOF DRAIN
LNDG	CONCRETE LANDING
	EXISTING STORM DRAIN LINE
	PROPOSED STORM DRAIN LINE
	PROPOSED CURB INLET
RIPRAP	RIPRAP
	PROPOSED SLOPED-PAVED
X X	DETAIL CALLOUT

Know what's **below.**
Call before you dig.

CLASSROOM ADDITION
FOR
UNION HILL SCHOOL
SOMERVILLE, ALABAMA
FOR THE
MORGAN COUNTY BOARD OF EDUCATION

JOHNSON & ASSOCIATES SURVEYING
ENGINEERING
1218 CHURCH STREET
DECATUR, ALABAMA 35601
PH 1-256-353-7331
FAX 1-256-353-7332

McKEE and ASSOCIATES
ARCHITECTS, INC.
631 SOUTH HULL STREET . MONTGOMERY . ALABAMA 36104 (334) 834-9933

ALABAMA PROFESSIONAL ENGINEER
REGISTERED NO. 16690
NATHAN G. JOHNSON
10/13/2022

SHEET TITLE : GRADING AND DRAINAGE PLAN

MCKEE JOB # : 22-134 / J&A 1949EN

DRAWN BY : RG

DATE: 10.13.2022

REVISED DATE:

REVISED DATE:

REVISED DATE:

SHEET NO. : C4.0

- T:\SubSite\1949EN_Union Hill Jr High Addition for McKee Architects\Civil 3D Design\Production Drawings\1949EN_C400_GRADING & DRAINAGE PLAN.DWG
- Thursday, October 13, 2022 5:11:29 PM

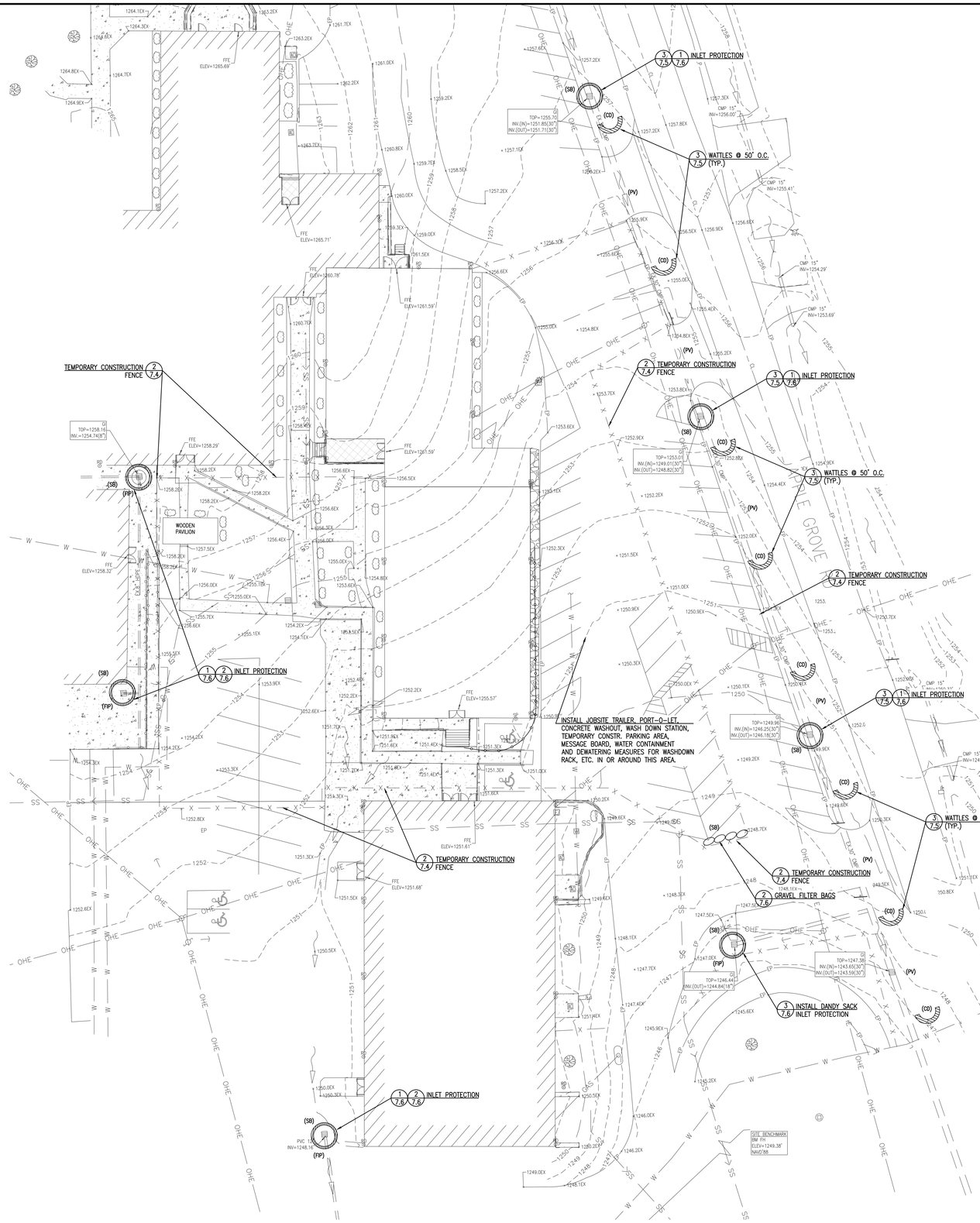

ABBREVIATIONS AND BEST MANAGEMENT PRACTICES AS DEFINED IN THE ALABAMA HANDBOOK FOR EROSION CONTROL, SEDIMENT CONTROL AND STORMWATER MANAGEMENT ON CONSTRUCTION SITES AND URBAN AREAS, VOLUMES 1 & 2							
(BFB)	BRUSH/FABRIC BARRIER	(FIP)	FABRIC DROP INLET PROTECTION	(PS)	PERMANENT SEEDING	(SOD)	SODDING OR SODDED SWALE
(CD)	CHECK DAMS	(GS)	GRASS SWALE	(PV)	PRESERVATION OF VEGETATION	(SVG)	SHRUB, VINE AND GROUNDCOVER PLANTING
(CEP)	CONSTRUCTION EXIT PAD	(GK)	GROUNDS KEEPING	(RD)	ROCK CHECK DAM	(ST)	SEDIMENT TRAP
(DC)	DUST CONTROL	(LG)	LAND GRADING	(RS)	RIPRAP-LINED SWALE	(TS)	TEMPORARY SEEDING
(DS)	DROP STRUCTURES	(LS)	LINED SWALE	(RW)	RETAINING WALL	(TSG)	TOPSOILING (12" AVERAGE DEPTH)
(DV)	DIVERSIONS	(MU)	MULCHING	(SB)	SEDIMENT BARRIER		
(ECB)	EROSION CONTROL BLANKET	(OP)	OUTLET PROTECTION	(SDB)	STORMWATER DETENTION BASIN		

NOTE: "THE ALABAMA HANDBOOK FOR EROSION CONTROL, SEDIMENT CONTROL, AND STORMWATER MANAGEMENT ON CONSTRUCTION SITES AND URBAN AREAS, LATEST EDITION AND ANY REVISION THEREOF, ARE HEREBY MADE A PART OF THESE PLANS.

STORM WATER MANAGEMENT

EROSION AND SEDIMENT CONTROL NOTES

GENERAL NOTES

1.) THE TOTAL DISTURBED AREA REQUIRED TO CONSTRUCT THE IMPROVEMENT SHOWN HEREON IS 31,050 S.F. (LESS THAN 1.0 ACRE), THEREFORE ADEM/NPDES PERMIT WILL NOT BE REQUIRED.

2.) ALTHOUGH NO ADEM/NPDES PERMIT APPLICATION IS REQUIRED, THE SITE CONTRACTOR WILL BE REQUIRED TO MEET THE FOLLOWING REQUIREMENTS DURING ALL PHASES OF THE PROJECT. PLEASE NOTE THAT ALL CONSTRUCTION SHOULD BE ACCOMPLISHED IN ACCORDANCE WITH THE PROVISIONS OF THE NATIONAL POLLUTANT DISCHARGE ELIMINATION SYSTEM (NPDES) OF THE U. S. ENVIRONMENTAL PROTECTION AGENCY (EPA). THIS EROSION & SEDIMENT CONTROL PLAN HAS BEEN PREPARED FOR THIS PROJECT IN ORDER TO SHOW SOME OF THE BEST MANAGEMENT PRACTICES (BMPS) THAT ARE REQUIRED TO BE IMPLEMENTED BY THE SITE CONTRACTOR IN ORDER TO COMPLY WITH EPA REGULATIONS (CFR 40, PART 122) AND THE ALABAMA DEPARTMENT OF ENVIRONMENTAL MANAGEMENT (ADEM) GUIDELINES UNDER A NPDES GENERAL PERMIT. THE SITE CONTRACTOR IS RESPONSIBLE FOR COMPLIANCE WITH THE EROSION & SEDIMENT CONTROL PLAN (WHICH INCLUDES THE PLANS AND DETAILS SHOWN ON THIS SET OF CONSTRUCTION PLANS). IT IS ALSO THE SITE CONTRACTOR'S RESPONSIBILITY TO PREVENT SOIL OR SEDIMENT LOSS FROM THE CONSTRUCTION SITE. THE SITE CONTRACTOR SHALL NOT LEAVE THE SITE UNTIL ALL EROSION CONTROL, SEDIMENT CONTROL AND STORM WATER MANAGEMENT PRACTICES ARE IN PLACE, HAVE BEEN INSPECTED AND FOUND SATISFACTORY; AND ALL TEMPORARY PRACTICES HAVE BEEN PROPERLY REMOVED.

EROSION AND SEDIMENT CONTROL NOTES:

THE PROJECT MUST BE CONSTRUCTED ACCORDING TO THE EROSION AND SEDIMENT CONTROL PLANS AND IN SUCH A MANNER AS TO MINIMIZE ADVERSE OFF-SITE EFFECTS OF SOIL EROSION AND RESULTING SEDIMENT LOSS THROUGH THE USE OF PROPER CONSTRUCTION TECHNIQUES; AND BY INSTALLING BOTH TEMPORARY AND PERMANENT MANAGEMENT PRACTICES. ALL SOIL-DISTURBING ACTIVITIES PERFORMED BY THE SITE CONTRACTOR WILL BE ACCOMPLISHED IN SUCH MANNER AS TO PREVENT LOSS OF SEDIMENT FROM THE CONSTRUCTION SITE DURING RAINFALL EVENTS. TO ACCOMPLISH THIS, THE PROJECT ENGINEER RECOMMENDS THE SPECIFIC STEPS NOTED BELOW TO BE TAKEN DURING CONSTRUCTION. THIS LIST IS NOT INTENDED TO BE A COMPREHENSIVE LIST OF EVENTS AND THE SITE CONTRACTOR SHOULD USE HIS/HER DISCRETION TO DETERMINE THE BEST SEQUENCE OF CONSTRUCTION. ALL EROSION AND SEDIMENT CONTROL MEASURES MUST BE INSTALLED IN A TIMELY FASHION TO PERFORM PROPERLY.

1.) IMMEDIATELY AFTER MOBILIZATION BUT PRIOR TO INITIATION OF ANY SOIL-DISTURBING ACTIVITIES, THE SITE CONTRACTOR WILL INSTALL ALL SPECIFIED PERIMETER CONTROLS ON THE SITE. THESE PRACTICES HAVE BEEN DESIGNED TO TRAP SEDIMENT PRODUCED DURING SOIL-DISTURBING ACTIVITIES, AND TO PREVENT OFF-SITE DAMAGE. IT IS RECOGNIZED THAT SOME SITE PREPARATION MAY BE REQUIRED TO PROPERLY INSTALL THESE PRACTICES. IN ADDITION, THE SITE CONTRACTOR SHALL INSTALL A MESSAGE BOARD WITH ALL PERTINENT FEDERAL, STATE AND LOCAL NOTICES FOR WORKERS, INCLUDING OSHA GUIDELINES, PERMITS, ETC. THE SITE CONTRACTOR SHALL INSTALL A COMMERCIAL SANITATION FACILITY FOR THE USE OF PERSONNEL WORKING ON THE SITE AND MAINTAIN THE FACILITY THROUGHOUT THE DURATION OF CONSTRUCTION. IT IS RECOMMENDED THAT THE PORT-A-JOHN, THE JOB SITE TRAILER, TEMPORARY CONSTRUCTION WORKER PARKING, CONSTRUCTION ENTRANCE, CONSTRUCTION MESSAGE BOARD, CONCRETE WASH-OUT CONTAINMENT, AND ENTRANCE WASH-DOWN AREA AND CONTAINMENT CONSTRUCTION ENTRANCE (SEE PLAN FOR SHOULD ALL BE LOCATED NEAR THE LOCATION).

2.) THE RECOMMENDED SEQUENCES FOR THE INSTALLATION AND REMOVAL OF EROSION AND SEDIMENT CONTROL MEASURES IS AS FOLLOWS: PERIMETER CONTROL MEASURES (SILT BARRIERS AND FENCING, AND CONSTRUCTION ENTRANCE) INSTALLED AT DESIGNATED AREAS; CLEANING OF STREET(S) DURING CONSTRUCTION; SITE GRADING (INCLUDING TEMPORARY SLOPE STABILIZATION) AS NEEDED; INSTALLATION OF DRAINAGE SYSTEM (INCLUDING WATTLES, INLET PROTECTION, SILT FENCES, ETC.); INSTALLATION OF UTILITIES; BUILDING CONSTRUCTION; SIDEWALKS: PAVING, FINAL GRADING AND SPREADING OF TOPSOIL; INSTALLATION OF SOD OR FINAL GROUND COVER AND LANDSCAPING; REMOVAL OF TEMPORARY PRACTICES AND PERIMETER CONTROLS; AND SITE CLEANUP.

3.) DURING ALL SOIL-DISTURBING ACTIVITIES, THE SITE CONTRACTOR WILL TAKE APPROPRIATE STEPS USING ACCEPTED CONSTRUCTION METHODS TO MINIMIZE EXPOSURE OF UNPROTECTED SOIL AND OTHER CONSTRUCTION MATERIALS TO RAINFALL. PARTICULAR CARE MUST BE EXERCISED WHEN DEALING WITH TOPSOIL STOCKPILES, FILL MATERIAL, OR SOIL ON SLOPES. THE CONTRACTOR WILL MAINTAIN A DATE LOG OF ALL SOIL DISTURBANCE ACTIVITIES OR MAJOR GRADING OPERATIONS, AND OF ALL MANAGEMENT PRACTICE OR CONTROL MEASURE INSTALLATIONS. ALL EXISTING DRAINAGEWAYS SHOULD REMAIN UNTIL PROPOSED STORM SYSTEM IS FUNCTIONING PROPERLY.

4.) IF, DURING THE COURSE OF CONSTRUCTION, ANY AREA OF SOIL (INCLUDING STOCKPILES) REMAINS EXPOSED FOR MORE THAN THIRTEEN CALENDAR DAYS OR LONGER WITHOUT SUITABLE EROSION CONTROL, THEN TEMPORARY STABILIZATION MEASURES SHOULD BE INSTALLED. SUITABLE TEMPORARY STABILIZATION MEASURES ARE PERIMETER CONTROLS AND GROUND PROTECTION MEASURES (SUCH AS GRAVEL BAGS, SAND BAGS, SEED/STRAW, HYDROSEED, MULCH, EROSION CONTROL BLANKETS, WATTLES, SILT FENCES, ETC.) ALONG ALL SIDE-SLOPE AND DOWN-SLOPE BORDERS OF THE DISTURBED AREA. NOTE THAT PERIMETER CONTROLS ALONE MAY NOT BE SUCCESSFUL; MOVEMENT OF LARGE AMOUNTS OF SEDIMENT PRODUCED BY HEAVY RAIN ON EXPOSED SOIL COULD OVERWHELM SUCH MEASURES.

5.) AT THE SITE CONTRACTOR'S DISCRETION, ADDITIONAL TEMPORARY EROSION CONTROL PRACTICES (SUCH AS GRAVEL BAGS, SAND BAGS, SEED/STRAW, WATTLES, AND SILT FENCES) MAY BE INSTALLED ALONG ANY DOWN-SLOPE OF SIDE-SLOPE PERIMETER OF A SOIL-DISTURBED AREA TO PREVENT SEDIMENT MOVEMENT. ANCHORED EROSION CONTROL MATTING, MULCHES, OR OTHER ACCEPTABLE METHODS MAY ALSO BE INSTALLED TO STABILIZE ANY UNPROTECTED SLOPES DURING CONSTRUCTION, AND HOLD THEM TO THE APPROPRIATE GRADE. AS SITE CONDITIONS WARRANT, THE SITE CONTRACTOR MAY ALSO CHOOSE TO MODIFY THE TYPE OR ARRANGEMENT OF SPECIFIED PRACTICES TO IMPROVE THEIR EFFECTIVENESS. THE SITE CONTRACTOR SHOULD PRESENT ALL PROPOSED MODIFICATIONS TO THE EROSION AND SEDIMENT CONTROL PLAN TO THE PROJECT ENGINEER FOR REVIEW AND CONSULTATION.

6.) THE SITE CONTRACTOR OR HIS/HER QUALIFIED REPRESENTATIVE SHALL INSPECT ALL SPECIFIED PRACTICES DAILY AND AFTER ALL RAINFALL EVENTS TO INSURE THAT EACH SPECIFIED PRACTICE REMAINS INTACT AND FUNCTIONING PROPERLY. ANY DAMAGE NOTED DURING SUCH INSPECTIONS SHALL BE REPAIRED PROMPTLY TO RESTORE THE PRACTICE TO ORIGINAL SPECIFICATIONS. THE SITE CONTRACTOR WILL BE RESPONSIBLE FOR MAINTENANCE OF ALL EROSION AND SEDIMENT CONTROL PRACTICES AS SPECIFIED IN THE PLANS, INCLUDING PERIODIC RE-GRADING, REMOVAL OF SEDIMENT BUILD-UP, ETC.

7.) SITE CONTRACTOR SHOULD UTILIZE WATER TRUCKS TO KEEP MOISTURE CONTENT OF DAMAGE NOTED DURING SUCH INSPECTIONS SHALL BE REPAIRED PROMPTLY TO SUBGRADE AT OPTIMUM LEVEL TO IMPROVE COMPACTION RESULTS AND TO REDUCE RESTORE THE PRACTICE TO ORIGINAL SPECIFICATIONS.THE SITE CONTRACTOR SHALL REMOVE DUST FROM CONSTRUCTION TRAFFIC. WHEN WATER IS USED FOR THESE PURPOSES, THE SITE CONTRACTOR SHALL BE RESPONSIBLE FOR MAINTENANCE OF ALL EROSION AND SEDIMENT CONTROL OR TO PROMOTE VEGETATION. THE SITE CONTRACTOR WILL PREVENT THE ESCAPE OF PRACTICES AS SPECIFIED IN THE PLANS, INCLUDING PERIODIC RE-GRADING, THIS WATER AND ANY SEDIMENT IT MAY CARRY FROM THE CONSTRUCTION SITE. IN REMOVAL OF SEDIMENT BUILD-UP, ETC. ADDITION, A CONCRETE WASH AREA WILL BE REQUIRED WITH A SYSTEM SETUP TO CAPTURE ALL WASH WATER AND SPOIL/FLUSHED CONCRETE FROM DELIVERY TRUCKS.

8.) IT IS RECOMMENDED THAT ALL FUELING OF HEAVY EQUIPMENT BE PERFORMED OFFSITE WHERE FACILITIES ARE ESTABLISHED TO DEAL WITH EMERGENCY SPILL CONTAINMENT AND EMERGENCY SPILL EQUIPMENT AND PRACTICES ARE IN PLACE TO HANDLE THE POTENTIAL HAZARDS OF EQUIPMENT REFUELING. IF THE SITE CONTRACTOR CHOOSES TO ESTABLISH AN ON-SITE FUELING AREA, THEN A FUELING PLAN MUST BE SUBMITTED TO THE PROJECT ENGINEER OUTLINING THE EMERGENCY SPILL PLAN AND SPILL CONTAINMENT MEASURES THAT WILL BE IMPLEMENTED BY THE SITE CONTRACTOR TO ENSURE THAT 100% OF ALL FUEL STORED OR BROUGHT TO THE SITE IN EXCESS OF 100 GALLONS CAN BE CONTAINED AND THAT EMERGENCY CLEAN-UP MEASURES WILL BE STORED ONSITE AND THAT PERSONNEL WILL BE TRAINED TO PROPERLY FUEL THE EQUIPMENT AND RECEIVE TRAINING FOR EMERGENCY SPILL CONTAINMENT AND CLEAN-UP MEASURES.

9.) CARE MUST BE EXERCISED TO PREVENT EXCESSIVE OFF-SITE TRACKING OF MUD OR SEDIMENT BY CONSTRUCTION VEHICLES. IN ADDITION TO THE SPECIFIED GRAVEL CONSTRUCTION ENTRANCE, PROPERLY GRAVELED TRANSITION AREAS SHOULD BE ESTABLISHED AT ALL TEMPORARY SITE EXITS TO ASSIST IN MUD REMOVAL FROM DEPARTING VEHICLES. THE SITE CONTRACTOR SHALL BE RESPONSIBLE FOR CLEANING THE ADJACENT STREET DAILY, OR AS DIRECTED BY THE CITY OR COUNTY, WHEN MUD IS TRACKED ONTO THE STREET FROM THE CONSTRUCTION SITE.

10.) DURING THE SITE CLEANUP PRIOR TO THE FINAL ACCEPTANCE DATE, EACH TEMPORARY BMP WILL BE COMPLETELY REMOVED AND THE AREA FINISHED TO THE APPROPRIATE POST-PROJECT CONDITION. THIS INVOLVES FINAL GRADING, AND INSTALLATION OF SOD OR SEED/STRAW ON ALL BARE SOIL AREAS OR FINAL GROUND COVER AS SHOWN ON THE LANDSCAPE PLAN. A MINIMUM VEGETATION DENSITY OF 85 PERCENT (COVERAGE REQUIREMENT IS 100%), OR AN EQUIVALENT SEDIMENT STABILIZATION MEASURE (GEOTEXTILES, JUTE NETTING, MULCHES, OR GABIONS, ETC.), IS REQUIRED UNTIL VEGETATION IS ESTABLISHED.

EROSION AND SEDIMENT CONTROL PHASING:

PHASE 1
1. A CONSTRUCTION ENTRANCE SHALL BE CONSTRUCTED AT THE ENTRANCE(S) NOTED PRIOR TO ENTERING SITE TO COMMENCE GRADING.
2. SILT FENCE SHALL BE INSTALLED ALONG THE PERIMETER OF SITE PRIOR TO STARTING DEMOLITION.
3. PLACE WATTLES NEAR ENTRANCES AND ALONG EXISTING DOWNSTREAM DRAINAGE WAYS, AS SHOWN HEREON.
4. SECURE ALL PERMITS FOR TREE REMOVAL, SITE GRADING, ETC. FROM THE COUNTY. POST ALL PERMITS, NOTICES, ETC. ON MESSAGE BOARD WHICH IS TO BE INSTALLED AT BEGINNING OF CONSTRUCTION. INSTALL AND MAINTAIN SANITATION FACILITY, IF REQUIRED IN BID DOCUMENTS.

PHASE 2
1. SILT FENCE SHALL BE INSTALLED IN THE AREA'S SHOWN HEREON UPON GRADING OF SUB-GRADE AND PRIOR TO PLACEMENT OF BASE.
2. ANY TEMPORARY SLOPES OR GRADED AREAS TO BE LEFT EXPOSED FOR MORE THAN 13 DAYS SHALL BE TEMPORARILY SEEDED AND MULCHED.
3. SOLID SODDING OR EROSION CONTROL NETTING SHALL BE PLACED ON ALL FINAL 3:1 OR GREATER SLOPES TO INSURE GRASS ESTABLISHMENT.
4. SOLID SOD OR SEED AND MULCHING OF ALL AREAS SHALL BE PERFORMED AND MAINTAINED UPON COMPLETION OF GRADING FOR THAT PORTION OF THE PROJECT.

PHASE 3
1. SILT FENCE SHALL REMAIN IN PLACE ALONG THE PERIMETER OF PROPOSED PROJECT, IN DRAINAGE WAYS, ROADWAYS, ETC. UNTIL GRASS IS ESTABLISHED (75% COVERAGE) FOR THAT AREA.
2. WATTLES SHALL REMAIN UNTIL THE IMMEDIATE AREA CONTRIBUTING DRAINAGE TO THAT LOCATION IS ESTABLISHED (75% COVERAGE).
3. REMOVE ALL SEDIMENT, DEBRIS, AND TEMPORARY EROSION CONTROL MEASURES.

EROSION & SEDIMENTATION CONTROL

I, NATHAN G. JOHNSON, THE ENGINEER OF RECORD, DO HEREBY CERTIFY THAT THE INFORMATION SHOWN HEREON IS COMPLETE AND CORRECT AND IN COMPLIANCE WITH ALL APPLICABLE REGULATIONS OF THE CITY OF HUNTSVILLE, ALABAMA, AND THAT PROPOSED GRADING AS SHOWN HEREON COMPLIES WITH GOOD ENGINEERING PRACTICE AND FURTHER DO CERTIFY THAT ALL EROSION AND SEDIMENTATION CONTROL MEASURES AS INDICATED HEREON ARE DESIGNED TO MINIMIZE THE EFFECTS OF EROSION AND SEDIMENTATION ON SITE.

10/13/2022
DATE

NATHAN G. JOHNSON
16690

LEGEND

- WATTLE
- RIGID INLET PROTECTION
- SILT FENCE
- DETAIL #1 ON SHEET 806 (1 / 806)
- DRAINAGE FLOW ARROW
- 795 PROPOSED CONTOURS
- X. 728.35 SPOT ELEVATION
- BENCHMARK

N

−10 0 10 20 40
SCALE IN FEET
1" = 20'

Know what's **below.**
Call before you dig.

CLASSROOM ADDITION
FOR
UNION HILL SCHOOL
SOMERVILLE, ALABAMA
FOR THE
MORGAN COUNTY BOARD OF EDUCATION

JOHNSON & ASSOCIATES
ENGINEERING SURVEYING
1218 CHURCH STREET
DECATUR, ALABAMA 35601
PH 1-256-353-7331
FAX 1-256-353-7332

McKEE and ASSOCIATES
ARCHITECTS, INC.
631 SOUTH HULL STREET, MONTGOMERY, ALABAMA 36104 (334) 834-9933

ALABAMA PROFESSIONAL ENGINEER
REGISTERED NO. 16690
NATHAN G. JOHNSON
10/13/2022

SHEET TITLE : EROSION CONTROL PLAN-PRE-CONSTRUCTION AND DEMOLITION PHASE

MCKEE JOB # : 22-134 / J&A 1949EN

DRAWN BY : RG

DATE: 10.13.2022

REVISED DATE:

REVISED DATE:

REVISED DATE:

SHEET NO. : C5.0

T:\SubSite\1949EN_Union Hill Jr High Addition for McKee Architects\Civil 3D Design\Production Drawings\1949EN_C500_EROSION CONTROL PLAN.Dwg
Thursday, October 13, 2022 5:13:31 PM

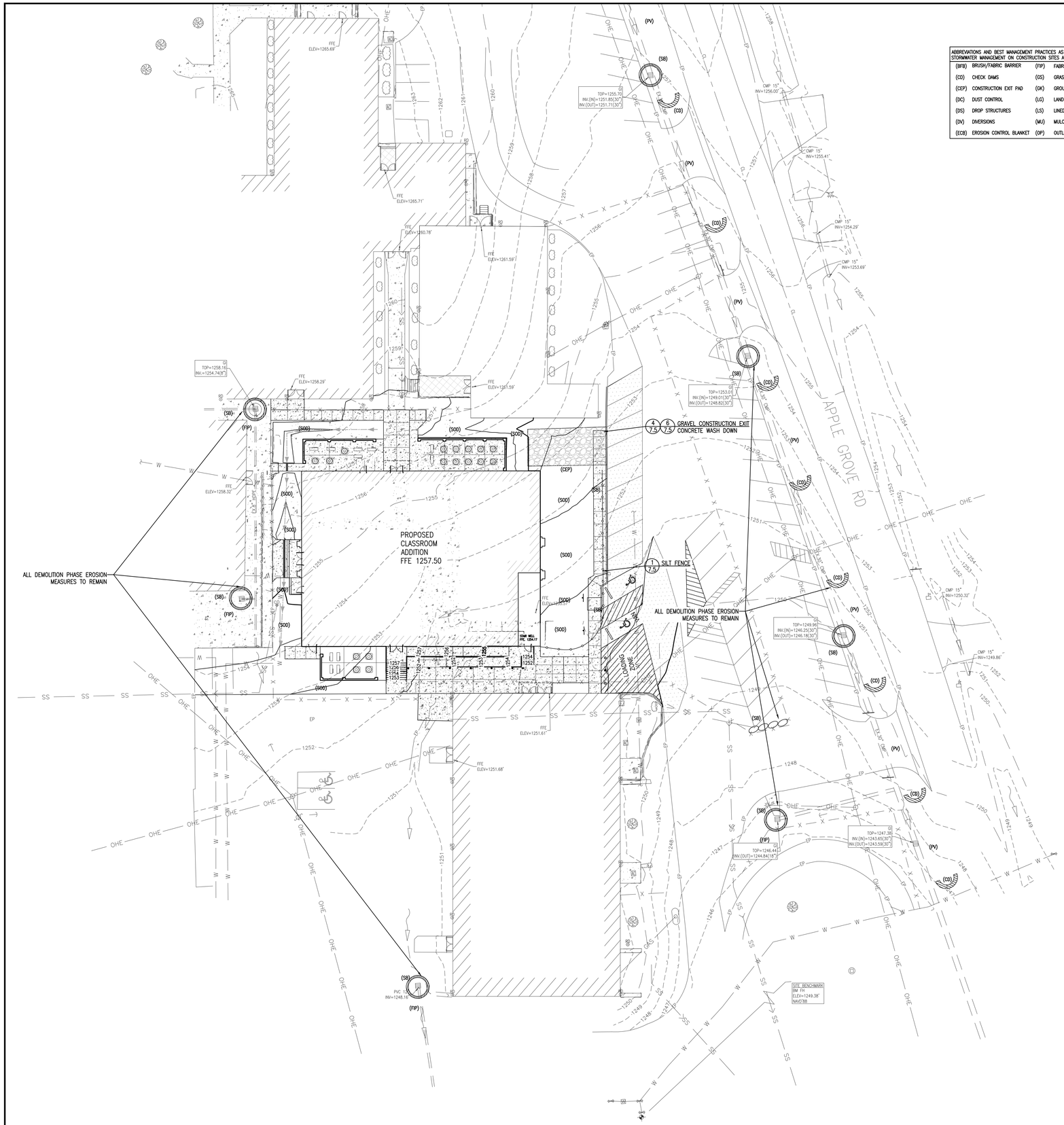

ABBREVIATIONS AND BEST MANAGEMENT PRACTICES AS DEFINED IN THE ALABAMA HANDBOOK FOR EROSION CONTROL, SEDIMENT CONTROL AND STORMWATER MANAGEMENT ON CONSTRUCTION SITES AND URBAN AREAS, VOLUMES 1 & 2					
(BFSI)	BRUSH/FABRIC BARRIER	(FIP)	FABRIC DROP INLET PROTECTION	(PS)	PERMANENT SEEDING
(CD)	CHECK DAMS	(GS)	GRASS SWALE	(PV)	PRESERVATION OF VEGETATION
(CEP)	CONSTRUCTION EXIT PAD	(GK)	GROUNDS KEEPING	(RD)	ROCK CHECK DAM
(DC)	DUST CONTROL	(LG)	LAND GRADING	(RS)	RIPRAP-LINED SWALE
(DS)	DROP STRUCTURES	(LS)	LINED SWALE	(RW)	RETAINING WALL
(DV)	DIVERSIONS	(MU)	MULCHING	(SB)	SEDIMENT BARRIER
(ECB)	EROSION CONTROL BLANKET	(OP)	OUTLET PROTECTION	(SDB)	STORMWATER DETENTION BASIN
(SOD)	SODDING OR SODDED SWALE				
(SVG)	SHRUB, VINE AND GROUNDCOVER PLANTING				
(ST)	SEDIMENT TRAP				
(TS)	TEMPORARY SEEDING				
(TSG)	TOPSOILING (12" AVERAGE DEPTH)				

NOTE: "THE ALABAMA HANDBOOK FOR EROSION CONTROL, SEDIMENT CONTROL, AND STORMWATER MANAGEMENT ON CONSTRUCTION SITES AND URBAN AREAS, LATEST EDITION AND ANY REVISION THEREOF, ARE HEREBY MADE A PART OF THESE PLANS.

LEGEND

- WATTLE
- RIGID INLET PROTECTION
- SILT FENCE
- DETAIL #1 ON SHEET 806
- DRAINAGE FLOW ARROW
- 795 PROPOSED CONTOURS
- X 728.35 SPOT ELEVATION
- BENCHMARK

CLASSROOM ADDITION
FOR
UNION HILL SCHOOL
SOMERVILLE, ALABAMA
FOR THE
MORGAN COUNTY BOARD OF EDUCATION

JOHNSON & ASSOCIATES
ENGINEERING SURVEYING
1218 CHURCH STREET
DECATUR, ALABAMA 35601
PH 1-256-353-7330
FAX 1-256-353-7332

McKEE and ASSOCIATES
ARCHITECTS, INC.
631 SOUTH HULL STREET, MONTGOMERY, ALABAMA 36104 (334) 834-9933

ALABAMA PROFESSIONAL ENGINEER
REGISTERED NO. 16690
NATHAN G. JOHNSON
10/13/2022

SHEET TITLE : EROSION CONTROL PLAN- CONSTRUCTION PHASE I

MCKEE JOB # : 22-134 / J&A 1949EN

DRAWN BY : RG

DATE: 10.13.2022

REVISED DATE:

REVISED DATE:

REVISED DATE:

SCALE IN FEET
1" = 20'

Know what's **below.**
Call before you dig.

SHEET NO. : C5.1

- T:\SubSite\1949EN, Union Hill Jr High Addition for McKee Architects\Civil 3D Design\Production Drawings\1949EN_C500_EROSION CONTROL PLAN.Dwg
- Thursday, October 13, 2022 5:13:46 PM

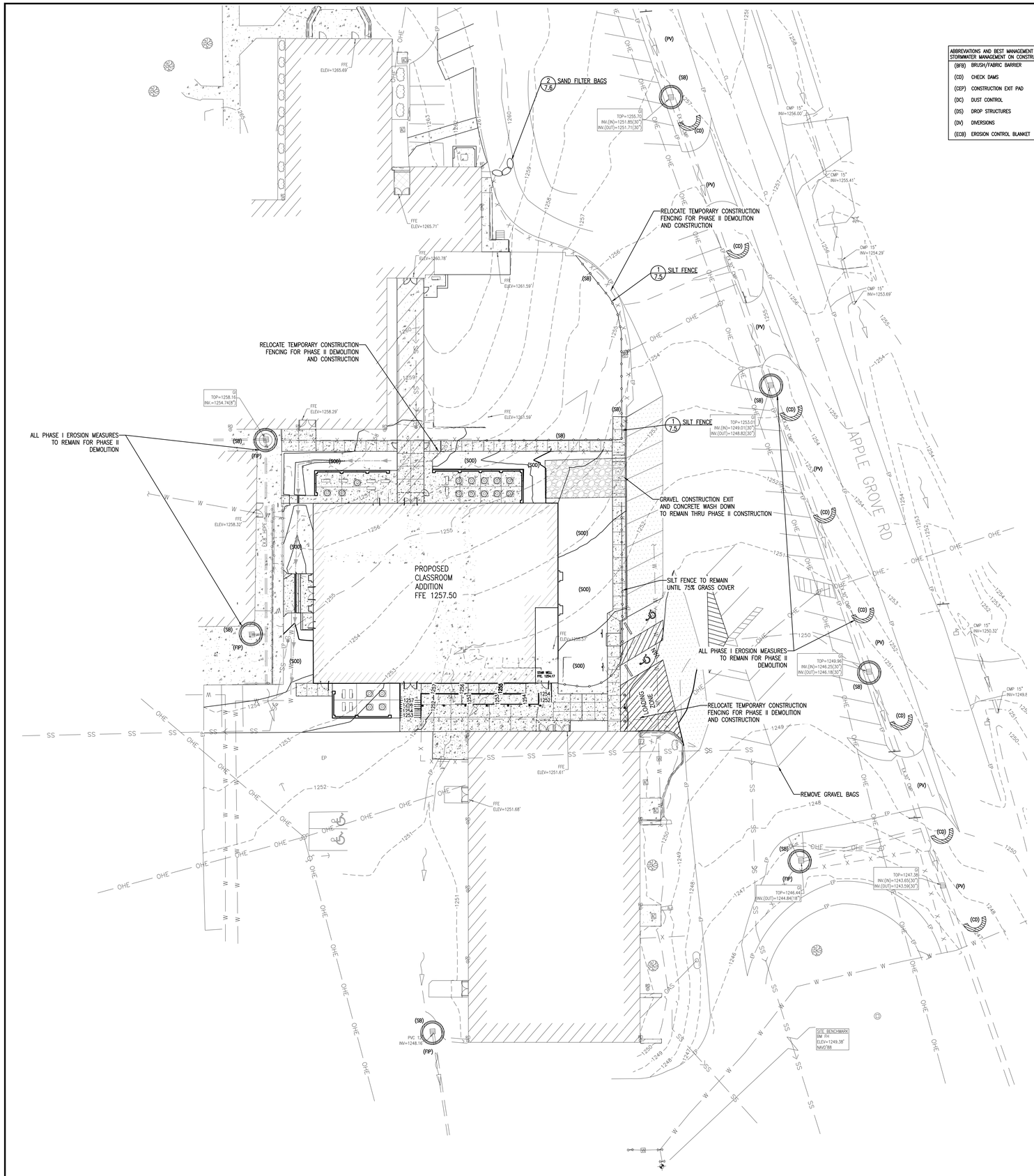

ABBREVIATIONS AND BEST MANAGEMENT PRACTICES AS DEFINED IN THE ALABAMA HANDBOOK FOR EROSION CONTROL, SEDIMENT CONTROL AND STORMWATER MANAGEMENT ON CONSTRUCTION SITES AND URBAN AREAS, VOLUMES 1 & 2

(BFB)	BRUSH/FABRIC BARRIER	(FIP)	FABRIC DROP INLET PROTECTION	(PS)	PERMANENT SEEDING	(SOD)	SODDING OR SODDED SWALE
(CD)	CHECK DAMS	(GS)	GRASS SWALE	(PV)	PRESERVATION OF VEGETATION	(SVG)	SHRUB, VINE AND GROUNDCOVER PLANTING
(CEP)	CONSTRUCTION EXIT PAD	(GK)	GROUNDS KEEPING	(RD)	ROCK CHECK DAM	(ST)	SEDIMENT TRAP
(DC)	DUST CONTROL	(LG)	LAND GRADING	(RS)	RIPRAP-LINED SWALE	(TS)	TEMPORARY SEEDING
(DS)	DROP STRUCTURES	(LS)	LINED SWALE	(RW)	RETAINING WALL	(TSG)	TOPSOILING (12" AVERAGE DEPTH)
(DV)	DIVERSIONS	(MU)	MULCHING	(SB)	SEDIMENT BARRIER		
(ECB)	EROSION CONTROL BLANKET	(OP)	OUTLET PROTECTION	(SDB)	STORMWATER DETENTION BASIN		

NOTE: "THE ALABAMA HANDBOOK FOR EROSION CONTROL, SEDIMENT CONTROL, AND STORMWATER MANAGEMENT ON CONSTRUCTION SITES AND URBAN AREAS, LATEST EDITION AND ANY REVISION THEREOF, ARE HEREBY MADE A PART OF THESE PLANS.

LEGEND

- WATTLE
- RIGID INLET PROTECTION
- SILT FENCE
- DETAIL #1 ON SHEET 806
- DRAINAGE FLOW ARROW
- 795 PROPOSED CONTOURS
- X 728.35 SPOT ELEVATION
- BENCHMARK

CLASSROOM ADDITION
FOR
UNION HILL SCHOOL
SOMERVILLE, ALABAMA
FOR THE
MORGAN COUNTY BOARD OF EDUCATION

JOHNSON & ASSOCIATES SURVEYING
ENGINEERING
1218 CHURCH STREET
DECATUR, ALABAMA 35601
PH 1-256-353-7331
FAX 1-256-353-7332

McKEE and ASSOCIATES
ARCHITECTS, INC.
631 SOUTH HULL STREET , MONTGOMERY , ALABAMA 36104 (334) 834-9933

ALABAMA PROFESSIONAL ENGINEER
REGISTERED NO. 16690
NATHAN G. JOHNSON
10/13/2022

SHEET TITLE : EROSION CONTROL PLAN- POST CONSTRUCTION PHASE I

MCKEE JOB # : 22-134 / J&A 1949EN

DRAWN BY : RG

DATE: 10.13.2022

REVISED DATE:

REVISED DATE:

REVISED DATE:

SCALE IN FEET
1" = 20'

811 Know what's **below.** **Call** before you dig.

SHEET NO. : C5.2

- T:\SubSite\1949EN, Union Hill Jr High Addition for McKee Architects\Civil 3D Design\Production Drawings\1949EN_C500_EROSION CONTROL PLAN.Dwg
- Thursday, October 13, 2022 5:14:02 PM

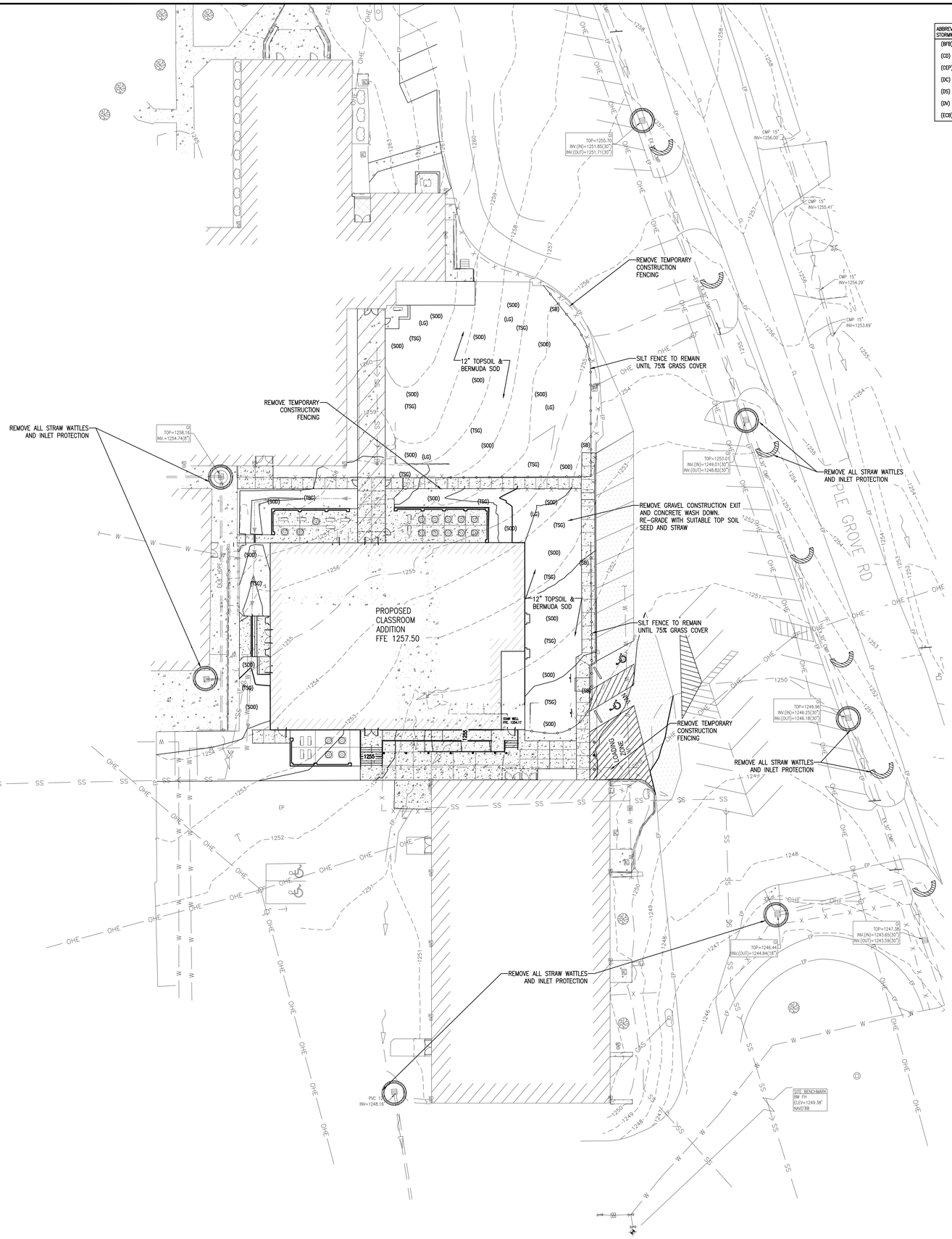

(BFB)	BRUSH/FABRIC BARRIER	(FIP)	FABRIC DROP INLET PROTECTION	(PS)	PERMANENT SEEDING	(SOD)	SODDING OR SODDED SWALE
(CD)	CHECK DAMS	(GS)	GRASS SWALE	(PV)	PRESERVATION OF VEGETATION	(SVG)	SHRUB, VINE AND GROUNDCOVER PLANTING
(CEP)	CONSTRUCTION EXIT PAD	(GK)	GROUNDS KEEPING	(RD)	ROCK CHECK DAM	(ST)	SEDIMENT TRAP
(DC)	DUST CONTROL	(LG)	LAND GRADING	(RS)	RIPRAP-LINED SWALE	(TS)	TEMPORARY SEEDING
(DS)	DROP STRUCTURES	(LS)	LINED SWALE	(RW)	RETAINING WALL	(TSG)	TOPSOILING (12" AVERAGE DEPTH)
(DV)	DIVERSIONS	(MU)	MULCHING	(SB)	SEDIMENT BARRIER		
(ECB)	EROSION CONTROL BLANKET	(OP)	OUTLET PROTECTION	(SDB)	STORMWATER DETENTION BASIN		

NOTE: "THE ALABAMA HANDBOOK FOR EROSION CONTROL, SEDIMENT CONTROL, AND STORMWATER MANAGEMENT ON CONSTRUCTION SITES AND URBAN AREAS, LATEST EDITION AND ANY REVISION THEREOF, ARE HEREBY MADE A PART OF THESE PLANS.

LEGEND

- WATTLE
- RIGID INLET PROTECTION
- SILT FENCE
- DETAIL #1 ON SHEET 806
- DRAINAGE FLOW ARROW
- 795 PROPOSED CONTOURS
- X. 728.35 SPOT ELEVATION
- BENCHMARK

SCALE IN FEET 1" = 20'

Know what's **below.** **Call** before you dig.

CLASSROOM ADDITION
FOR
UNION HILL SCHOOL
SOMERVILLE, ALABAMA
FOR THE
MORGAN COUNTY BOARD OF EDUCATION

JOHNSON & ASSOCIATES
ENGINEERING SURVEYING
1216 CHURCH STREET
HUNTSVILLE, ALABAMA 35801
1-256-533-7331
FAX 1-256-533-7332

McKEE and ASSOCIATES
ARCHITECTS, INC.
631 SOUTH HULL STREET, MONTGOMERY, ALABAMA 36104 (334) 834-9933

ALABAMA PROFESSIONAL ENGINEER REGISTERED NO. 16690 NATHAN G. JOHNSON
10/13/2022

SHEET TITLE : EROSION CONTROL PLAN- POST CONSTRUCTION PHASE II

MCKEE JOB # : 22-134 / J&A 1949EN

DRAWN BY : RG

DATE: 10.13.2022

REVISED DATE:

REVISED DATE:

REVISED DATE:

SHEET NO. : C5.3

- T:\SubSite\1949EN, Union Hill Jr High Addition for McKee Architects\Civil 3D Design\Production Drawings\1949EN_C500_EROSION CONTROL PLAN.Dwg
- Thursday, October 13, 2022 5:14:13 PM

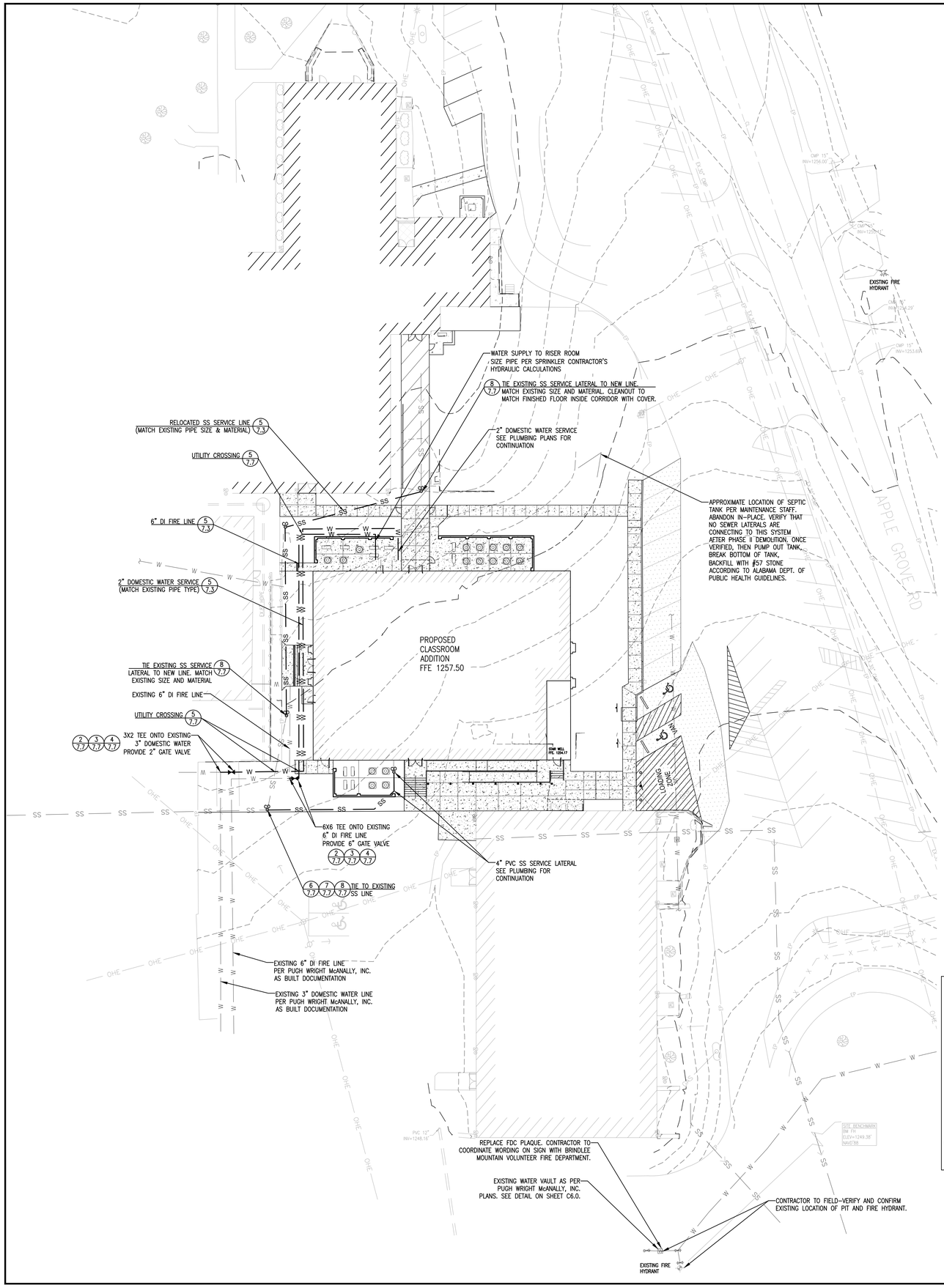

SANITARY SEWER GENERAL NOTES

1. THE INTENT OF THE DRAWINGS IS THAT THE CONTRACTOR SHALL FURNISH ALL LABOR, MATERIALS, TOOLS, EQUIPMENT AND TRANSPORTATION NECESSARY FOR THE PROPER EXECUTION OF THE WORK IN ACCORDANCE WITH THE CONTRACT DOCUMENTS AND ALL INCIDENTAL WORK NECESSARY TO COMPLETE THE PROJECT IN AN ACCEPTABLE MANNER, READY FOR USE, OCCUPANCY OR OPERATION BY THE OWNER.
2. EFFORTS HAVE BEEN MADE TO INDICATE LOCATIONS OF EXISTING STRUCTURES, PIPING, UTILITIES, AND TOPOGRAPHY. HOWEVER, IT IS THE CONTRACTOR'S RESPONSIBILITY TO FIELD VERIFY EXACT MEASUREMENTS AND LOCATIONS OF ALL EXISTING ITEMS BEFORE INITIATING ANY CONSTRUCTION OPERATIONS. ANY EXISTING STRUCTURE, PIPING OR UTILITY DISTURBED OR DAMAGED BY THE CONTRACTOR DURING CONSTRUCTION OPERATIONS SHALL BE REPLACED BY THE CONTRACTOR AT NO ADDITIONAL COST TO THE OWNER AND/OR DESIGN ENGINEER. SUFFICIENT ADVANCE COORDINATION OF DISRUPTION WITH THE OWNER OF ANY FACILITY IS THE TOTAL RESPONSIBILITY OF THE CONTRACTOR.
3. EXISTING GRADING AND DRAINAGE ELEVATIONS SHALL BE MAINTAINED AFTER CONSTRUCTION UNLESS OTHERWISE SHOWN ON PLANS.
4. ALL BURIED PIPES SHALL HAVE A MINIMUM OF 3'-0" COVER AS MEASURED VERTICALLY FROM FINISHED GRADE TO THE TOP OF PIPE, UNLESS OTHERWISE NOTED.
5. IT SHALL BE THE CONTRACTOR'S RESPONSIBILITY TO WORK ALL APPLICABLE DRAWINGS AND THE APPROPRIATE SPECIFICATIONS AS A UNIT. ANY OMISSIONS, DELETIONS, OR CONFLICTS ARISING AS A RESULT OF FAILURE TO INCORPORATE ALL DRAWINGS AND SPECIFICATIONS THAT APPLY SHALL BE CORRECTED BY THE CONTRACTOR AT NO ADDITIONAL COST TO THE OWNER AND/OR DESIGN ENGINEER.
6. THE CONTRACTOR SHALL PROVIDE RELEVANT INFORMATION CONCERNING MATERIALS, LOCATION OF IMPROVEMENTS, RED-LINED DRAWINGS OF FIELD CHANGES, AND ANY OTHER AVAILABLE RECORD DRAWINGS AND NOTES TO THE DESIGN ENGINEER IN ORDER TO PREPARE THE "AS-BUILT/RECORD DRAWING" UPON COMPLETION OF CONSTRUCTION. THE CONTRACTOR WILL NOTIFY THE DESIGN ENGINEER AT VARIOUS STAGES OF CONSTRUCTION IN ORDER TO ALLOW FOR INSPECTIONS, FIELD SURVEY BEFORE COVERING IMPROVEMENTS, PHOTOGRAPHS, ETC. THAT WILL BE USED IN PREPARING THE RECORD DRAWING AND THE FINAL ENGINEER'S ACCEPTANCE CERTIFICATION. FAILURE TO NOTIFY THE DESIGN ENGINEER IN ORDER TO PROVIDE ADEQUATE INSPECTIONS AND FIELD LOCATIONS DURING CONSTRUCTION WILL RESULT IN THE CONTRACTOR HAVING TO EXPOSE THE IMPROVEMENTS FOR VISUAL INSPECTION. ALL COSTS REQUIRED TO DIG UP THE IMPROVEMENTS, BACKFILLING/BEDDING, REPAIR DAMAGE INFRASTRUCTURE, ETC. WILL BE AT NO ADDITIONAL COST TO THE OWNER AND OR DESIGN ENGINEER.
7. THE DESIGN ENGINEER SHALL PROVIDE GEOTECHNICAL INFORMATION SUCH AS BORINGS, SOIL TESTS, ETC. UPON WRITTEN REQUEST.
8. ALL CONCRETE, ASPHALT DRIVEWAYS AND OTHER ROAD ACCESSES, SHALL BE SAWCUT AND REPAIRED IN AS GOOD OR BETTER CONDITION AS BEFORE CONSTRUCTION. PROPERTY OWNERS SHALL HAVE ACCESS TO PROPERTY AT ALL TIMES DURING CONSTRUCTION.
9. SERVICE LATERALS AND STUBOUTS SHALL BE EXTENDED TO PROPERTY, BUILDING OR EASEMENT LINES AS SHOWN ON PLANS.
10. SEED, FERTILIZE, AND MULCH ALL DISTURBED AREAS DURING CONSTRUCTION.
11. EXISTING FENCES OR GATES MAY BE REMOVED FOR CONSTRUCTION PURPOSES ONLY, AND FENCES SHALL BE REINSTALLED IN THEIR ORIGINAL POSITIONS AND IN AS GOOD OR BETTER CONDITION THAN BEFORE CONSTRUCTION.
12. CONTRACTOR SHALL COORDINATE IN ADVANCE AND DURING CONSTRUCTION OPERATIONS WITH THE OWNER OF ANY FIBER OPTIC COMMUNICATIONS CABLES IN THE AREAS WHERE THESE UTILITIES MAY EXIST.
13. TRAFFIC CONTROL SHALL BE MAINTAINED PER THE "MANUAL ON UNIFORM TRAFFIC CONTROL DEVICES," LATEST EDITION.
14. IF THE LAND DISTURBANCE FOR THE SITE IS GREATER THAN 1 ACRE, THEN THE CONTRACTOR SHALL BE RESPONSIBLE FOR COMPLYING WITH NPDES STORMWATER PERMIT DURING ENTIRE CONSTRUCTION PERIOD. A COPY OF THE ADEM/NPDES PERMIT SHALL BE PROVIDED TO THE COUNTY ENGINEER AND MAINTAINED ON SITE AT ALL TIMES.

UTILITIES NOTES

1. THE CONTRACTOR IS TO PREVENT THE DESTRUCTION OF ALL SURVEY MONUMENTS, BENCH MARKS, PROPERTY CORNERS AND ALL OTHER SURVEY POINTS. WHERE THE REMOVAL OF SUCH POINTS IS NECESSARY FOR THE ACCOMPLISHMENT OF THE WORK, THE CONTRACTOR IS TO INFORM THE ENGINEER IN WRITING, PRIOR TO THE DISTURBANCE OF ANY POINT, AND IS NOT TO DISTURB THE POINT UNTIL WRITTEN PERMISSION TO DO SO HAS BEEN ISSUED BY THE ENGINEER.
2. CONTRACTOR SHALL REPAIR ANY DAMAGE TO EXISTING STREET/PARKING AND SIDEWALK THAT IS CREATED DURING CONSTRUCTION ACTIVITIES.
3. CONTRACTOR SHALL BE RESPONSIBLE FOR HAVING EXISTING UTILITIES LOCATED PRIOR TO EXCAVATION. WE ASSUME NO RESPONSIBILITY AS TO THE ACCURACY OR COMPLETENESS OF UTILITIES DEPICTED IN THESE DRAWINGS.
4. CONTRACTOR IS RESPONSIBLE FOR AND SHOULD VERIFY THE LOCATION OF ALL UNDERGROUND UTILITIES PRIOR TO CONSTRUCTION. ALL BURIED UTILITIES WERE NOT LOCATED DURING THE TOPOGRAPHIC SURVEY. UTILITIES SHOWN HEREON ARE APPROXIMATE AND MAY NOT REFLECT THE ACTUAL FIELD LOCATION OR THE PRESENCE OF OTHER UNDERGROUND UTILITIES.
5. CONTRACTOR TO COORDINATE WITH ARAB WATER WORKS FOR ALL WATER SERVICE CONNECTIONS, INSPECTION REQUIREMENTS, STANDARDS AND GUIDELINES.
6. ALL SLOPES ON SEWER LATERALS MUST BE 1.00% MINIMUM (2% PREFERRED). CONTRACTOR TO VERIFY SLOPES FOR ADEQUATE FALL PRIOR TO CONSTRUCTION.
7. MATCH RIM ELEVATIONS FOR SANITARY SEWER CLEANOUTS TO FINISH GRADE (TYPICAL).
8. THRUST BLOCKING IS REQUIRED AT ALL CHANGES IN DIRECTION FOR NEW WATER LINES.
9. SITE CONTRACTOR SHALL COORDINATE WITH PLUMBING CONTRACTOR ON SEWER LATERAL INVERTS.
10. SITE CONTRACTOR SHALL SECURE COPIES OF ALL PROJECT MECHANICAL, PLUMBING, & ELECTRICAL (MEP) DRAWINGS.
11. SANITARY SEWER PVC PIPE TO BE SCH. 40.
12. SANITARY SEWER DUCTILE IRON PIPE TO BE CLASS 350.
13. SIZE OF WATER LINES ARE DEPENDENT UPON USAGE NEEDS. SEE ARCHITECT'S PLANS PLUMBING PLANS FOR VERIFICATION OF UTILITIES.
14. ALL UTILITIES TO BE UNDERGROUND.
20. ELECTRICAL, COMMUNICATIONS, AND FIRE PROTECTION LINES ARE TO BE RUN INTO THE RISER/MAINTENANCE ROOM. SEE ARCHITECTURE AND/OR MEP PLANS FOR ACTUAL LOCATION OF SERVICE CONNECTIONS INTO BUILDING.
21. ALL SANITARY SEWER SERVICE LATERALS ARE TO BE 4" PVC AND LAID IN A UTILITY PAVEMENT TRENCH IN ACCORDANCE WITH DETAIL 5, SHEET C7.3.
22. ALL CLEANOUTS ARE TO BE COMMERCIAL GRADE, AND THE TOP ELEVATION IS TO BE SET TO THE FINISH GRADE OF THE PLACEMENT.

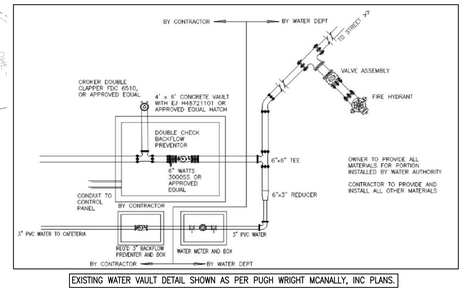

EXISTING WATER VAULT DETAIL SHOWN AS PER PUGH WRIGHT MCANALLY, INC PLANS.

LEGEND

W	EXISTING WATER MAIN
W	PROPOSED WATER MAIN
	EXISTING FIRE HYDRANT
	PROPOSED FIRE HYDRANT
	PROPOSED GATE VALVE
	TEE
W	WATER SERVICE LINE
	FLUSHING VALVE ASSEMBLY
	REDUCER
G	PROPOSED GAS METER
GAS	PROPOSED GAS SERVICE LINE
GAS	EXISTING GAS LINE
	EXISTING SANITARY SEWER MANHOLE
S	PROPOSED SANITARY SEWER MANHOLE
SS	PROPOSED SANITARY SEWER LINE
SS	EXISTING SANITARY SEWER LINE
CO	PROPOSED CLEAN-OUT
G	PROPOSED GAS LINE
UE	PROPOSED ELECTRIC LINE
1/D5	DETAIL #1 ON SHEET CD.5
E	PROPOSED ELEC. TRANSFORMER
T	PROPOSED TELEPHONE RISER
OHE	OVERHEAD ELECTRIC
TV	UNDERGROUND TV CABLE
UT	UNDERGROUND TELEPHONE LINE
UE	UNDERGROUND ELECTRIC
FO	FIBER OPTIC CABLE

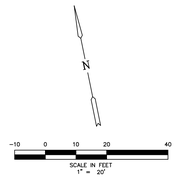

811 Know what's below. Call before you dig.

CLASSROOM ADDITION
FOR
UNION HILL SCHOOL
SOMERVILLE, ALABAMA
FOR THE
MORGAN COUNTY BOARD OF EDUCATION

JOHNSON & ASSOCIATES SURVEYING
1218 CHURCH STREET
DECATUR, ALABAMA 35601
PH 1-256-353-7331
FAX 1-256-353-7332

McKEE and ASSOCIATES
ARCHITECTS, INC.
631 SOUTH HULL STREET . MONTGOMERY . ALABAMA 36104 (334) 834-9933

ALABAMA PROFESSIONAL ENGINEER
REGISTERED NO. 16690
ENGINEER NATHAN G. JOHNSON
10/13/2022

SHEET TITLE : UTILITY PLAN

MCKEE JOB # : 22-134 / J&A 1949EN

DRAWN BY : RG

DATE: 10.13.2022

REVISED DATE:

REVISED DATE:

REVISED DATE:

SHEET NO. : C6.0

- T:\SubSite\1949EN, Union Hill Jr High Addition for McKee Architects\Civil 3D Design\Production Drawings\1949EN_C600_UTILITY PLAN.Dwg
- Thursday, October 13, 2022 5:15:59 PM

GENERAL NOTES

1. CONTRACTOR IS RESPONSIBLE FOR MAKING APPLICATION AND PAYING FOR NECESSARY PERMITS.

2. THE CONTRACTOR IS TO PREVENT THE DESTRUCTION OF ALL SURVEY MONUMENTS, BENCH MARKS, PROPERTY CORNERS AND ALL OTHER SURVEY POINTS. WHERE THE REMOVAL OF SUCH POINTS IS NECESSARY FOR THE ACCOMPLISHMENT OF THE WORK, THE CONTRACTOR IS TO INFORM THE ENGINEER IN WRITING, PRIOR TO THE DISTURBANCE OF ANY POINT, AND IS NOT TO DISTURB THE POINT UNTIL WRITTEN PERMISSION TO DO SO HAS BEEN ISSUED BY THE ENGINEER.

3. ALL EXISTING TREES OUTSIDE OF THE LIMITS OF WORK ARE TO BE PROTECTED DURING THE ACCOMPLISHMENT OF THE WORK, AND ARE NOT TO BE DAMAGED IN ANY MANNER.

4. CONTRACTOR SHALL REPAIR ANY DAMAGE TO EXISTING STREETS OR DRIVEWAYS THAT IS CREATED DURING CONSTRUCTION ACTIVITIES.

5. ALL BOULDERS, DEBRIS, EXCESS CONSTRUCTION MATERIALS, MATERIAL GENERATED FROM DEMOLITION OF EXISTING STRUCTURES AND FACILITIES OR TRASH TO BE REMOVED FROM SITE AT CONTRACTOR'S EXPENSE.

6. CONTRACTOR SHALL BE RESPONSIBLE FOR HAVING EXISTING UTILITIES LOCATED PRIOR TO EXCAVATION. JOHNSON & ASSOCIATES ASSUMES NO RESPONSIBILITY AS TO THE ACCURACY OR COMPLETENESS OF UTILITIES DEPICTED ON THESE DRAWINGS.

7. ALL STORM DRAINAGE PIPES SHALL BE HDPE PIPE PER ASTM F2648 OR REINFORCED CONCRETE CLASS III PER ASTM C-76 UNLESS OTHERWISE NOTED. PIPE BEDDING SHALL BE CLASS "C" TRENCH BEDDING EXCEPT AS NOTED. COMPACTED GRANULAR MATERIAL FOR BEDDING MAY BE REQUIRED BASED ON UNSUITABLE GROUND WATER CONDITIONS OR CONDITIONS SUCH THAT SHAPED TRENCH BOTTOM CANNOT BE PROPERLY OBTAINED BY THE CONTRACTOR.

8. PAVEMENT CUTS SHALL BE REPAIRED WITH MATERIAL IN KIND TO THAT REMOVED.

9. RIP RAP SHALL BE CLASS I, IN ACCORDANCE WITH SECTION 814, ALDOT, AND SHALL BE GROUTED WHERE INDICATED ON THE PLANS.

10. IN ACCORDANCE WITH GENERALLY ACCEPTED CONSTRUCTION PRACTICES, THE CONTRACTOR WILL BE SOLELY AND COMPLETELY RESPONSIBLE FOR CONDITIONS OF THE JOBSITE, INCLUDING SAFETY OF ALL PERSONS AND PROPERTY DURING PERFORMANCE OF THE WORK. THIS REQUIREMENT WILL APPLY CONTINUOUSLY AND NOT BE LIMITED TO NORMAL WORKING HOURS. CONTRACTOR SHALL PROVIDE ADEQUATE TRAFFIC CONTROL DEVICES AND SAFETY MEASURES FOR CONSTRUCTION WORK WITHIN PUBLIC AND/OR PRIVATE RIGHT-OF-WAYS IN ACCORDANCE WITH THE MANUAL ON UNIFORM TRAFFIC CONTROL DEVICES FOR STREETS AND HIGHWAYS. THE DUTY OF THE ENGINEER TO CONDUCT CONSTRUCTION REVIEW OF THE CONTRACTOR'S PERFORMANCE IS NOT INTENDED TO INCLUDE REVIEW OF THE ADEQUACY OF THE CONTRACTOR'S SAFETY MEASURES, IN, ON OR NEAR THE CONSTRUCTION SITE.

11. THE STORM DRAINAGE SYSTEM FOR THIS SITE HAS BEEN DESIGNED FOR A 25 YEAR STORM EVENT FOR DITCH DESIGNS AND A 10 YEAR STORM EVENT FOR PIPE DESIGNS, UNLESS OTHERWISE NOTED, IN ACCORDANCE WITH THE STANDARDS OF MORGAN COUNTY WITH REGARD TO THE SYSTEM CAPACITY, NO WARRANTY IS EXPRESSED OR IMPLIED FOR STORMS OF GREATER INTENSITY.

12. THIS DOCUMENT, AND THE IDEAS AND DESIGNS INCORPORATED HEREIN AS AN INSTRUMENT OF PROFESSIONAL SERVICES, IS THE PROPERTY OF JOHNSON & ASSOCIATES, INC., AND IS NOT TO BE USED, IN WHOLE OR PART, FOR ANY OTHER PROJECT WITHOUT THE WRITTEN AUTHORIZATION OF JOHNSON & ASSOCIATES, INC.

EARTHWORK GENERAL NOTES

1. REFER TO THE GEO-TECHINCAL ENGINEER'S REPORT FOR SITE RECOMMENDATIONS FOR UNDERCUT, REMOVAL AND REPLACEMENT OF UNSUITABLE SOIL IN PAVEMENT AREAS AND BUILDING FOUNDATION AREAS.

2. SITE TOPOGRAPHY MAPS AND OTHER TOPOGRAPHIC DATA SHOWN ON THE PLANS OR INCLUDED IN THE SPECIFICATIONS ARE FOR THE INFORMATION OF THE CONTRACTOR. THE CONTRACTOR SHALL MAKE SUCH ADDITIONAL INVESTIGATIONS AS REQUIRED TO ACQUAINT HIMSELF ADEQUATELY WITH THE SITE TOPOGRAPHY, AND THE SUBSURFACE SOIL CONDITIONS FOR PREPARATION OF HIS BID, AND FOR THE SUCCESSFUL EXECUTION OF THE WORK.

3. ALL PROPOSED CONTOUR ELEVATIONS SHOWN ARE FINISH GRADE.

4. PROTECTION OF WORK: THE CONTRACTOR IS TO BE SOLELY RESPONSIBLE FOR THE PROTECTION OF HIS WORK. SUCH GRADING IS THE RESPONSIBILITY OF THE CONTRACTOR AND WILL BE AT NO ADDITIONAL COST TO THE OWNER. THE OWNER MAY DIRECT THE CONTRACTOR TO PERFORM NECESSARY GRADING AND DRAINAGE TO PREVENT SURFACE RUN OFF FROM DAMAGING THE WORK.

5. CONTRACTOR SHALL BE REQUIRED TO INSTALL SILT FENCES, WATTLES, ETC., TO PREVENT EROSION OF DISTURBED EARTH AND FILL AREAS. SILT FENCES SHALL BE REQUIRED, IF NECESSARY TO PREVENT LOOSE DIRT FROM WASHING ONTO STREETS AND ADJACENT PROPERTY. CONTRACTOR SHALL BE RESPONSIBLE FOR EROSION AND SEDIMENT CONTROL UNTIL FINAL INSPECTION BY CITY.

6. ALL EARTH FILL SHALL BE COMPACTED TO 95% OF THE MAXIMUM DRY DENSITY, PLUS OR MINUS 2% OF OPTIMUM MOISTURE (ASTM-D698), EXCEPT FOR EARTH FILLS UNDER ROADS & BUILDINGS WHICH ARE TO COMPLY WITH PAVING SPECIFICATIONS (VERIFY WITH GEOTECHICAL REPORT).

7. EARTH FILL SHALL BE PLACED IN UNIFORM LAYERS OR LIFTS NOT EXCEEDING 8" LOOSE THICKNESS, PER (VERIFY WITH GEOTECHICAL REPORT.)

8. EARTH FILL SHALL BE PLACED IN ACCORDANCE WITH SECTION 210, ALDOT. EARTH FILL UNDER THE BUILDING SHALL ALSO MEET THE REQUIREMENTS OF THE ARCHITECT'S PLANS AND SPECIFICATIONS. (VERIFY WITH GEOTECHICAL REPORT)

REINFORCED CONCRETE NOTES

1. ALL CONCRETE SHALL BE AIR ENTRAINED 3000 PSI MINIMUM COMPRESSIVE STRENGTH AT 28 DAYS, CLASS "A" UNLESS OTHERWISE NOTED.

2. ALL CONSTRUCTION JOINTS SHALL BE CONSTRUCTED WITH SHEAR KEYS IN ACCORDANCE WITH THE SHEAR KEY DETAIL LOCATED ON SHEET C7.0.

3. ALL REINFORCING STEEL SHALL BE GRADE 60 DEFORMED, AND SHALL CONFORM TO ASTM A615, FOR BILLET STEEL.

4. LAP SPLICES AND BAR EMBEDMENTS SHALL BE IN ACCORDANCE WITH THE TABLE ON SHEET C7.0.

5. CONCRETE AIR CONTENT AND SLUMP SHALL BE IN ACCORDANCE WITH THE TABLE ON SHEET C7.0.

6. ALL REINFORCING BARS SHALL BE SHOP BENT IN ACCORDANCE WITH THE TABLE ON SHEET C7.0.

7. HEATING OF REINFORCING BARS TO BEND THEM, OR STRAIGHTEN THEM WILL NOT BE ALLOWED.

8. ALL WELDED WIRE FABRIC SHALL CONFORM TO ASTM A185, SMOOTH FABRIC WITH AN ASTM YIELD STRENGTH OF 65,000 PSI.

PAVEMENT CONSTRUCTION GENERAL NOTES

1. ALDOT, SHALL MEAN STATE OF ALABAMA HIGHWAY DEPARTMENT STANDARD SPECIFICATIONS FOR HIGHWAY CONSTRUCTION, LATEST EDITION.
2. CRUSHED AGGREGATE BASE COURSE PLANT MIXED SHALL BE PLACED IN ACCORDANCE WITH SECTION 301 ALDOT. ALL MATERIALS SHALL BE IN ACCORDANCE WITH SECTION 825, TYPE B, 100% COMPACTION.
3. PORTLAND CEMENT CONCRETE PAVEMENT SHALL BE PLACED IN ACCORDANCE WITH SECTION 450, ALDOT.
4. BITUMINOUS TACK COAT SHALL BE PLACED IN ACCORDANCE WITH SECTION 405, ALDOT. TACK COAT SHALL BE NTS-1HM.
5. BITUMINOUS CONCRETE WEARING SURFACE LAYER SHALL BE PLACED IN ACCORDANCE WITH SECTION 424, ALDOT. USE ALDOT 424A-340.
6. THE SITE SHALL BE CLEARED AND ALL UNSUITABLE MATERIAL REMOVED PRIOR TO PLACING AND COMPACTING EMBANKMENTS.
7. ALL SUBGRADES SHALL BE CLEARED AND GRUBBED, SCARIFIED TO A DEPTH OF 6", AND THEN RECOMPACTED TO 100% OF THE MAXIMUM DRY DENSITY, PLUS OR MINUS 2% OF OPTIMUM MOISTURE, ASTM-D698.
8. IN ROCK EXCAVATION A MINIMUM OF 1 FOOT OF SOIL SHALL BE PLACED OVER ROCK PRIOR TO PLACEMENT OF BASE MATERIAL.
9. ALL WORK INSIDE THE ALDOT RIGHT-OF-WAY SHALL BE IN ACCORDANCE WITH ALDOT SPECIFICATIONS AND REQUIREMENTS.

SEEDING NOTES

SEEDING & SOD SPECIFICATIONS SHOWN ON LANDSCAPE PLAN SHALL TAKE PRECEDENCE IF THERE ARE ANY CONFLICTS WITH THE SEEDING NOTES SHOWN BELOW.

CONTRACTOR IS REQUIRED TO FURNISH ALL MATERIALS, EQUIPMENT AND LABOR NECESSARY FOR THE SEEDING OF AREAS SPECIFIED ON THE GRADING PLANS. ALL SPECIFIED SURFACE AREAS SHALL BE SEEDED ACCORDING TO THE SPECIFICATIONS LISTED BELOW.

1. TOPSOIL SHALL BE STRIPPED AND STOCK PILED. A MINIMUM OF 12 INCHES OF CONDITIONED AND AMENDED TOPSOIL SHALL BE RESPREAD OVER ALL AREAS FOR SEED-ING AND CONFORM WITH THE GRADING PLAN.

2. SEEDING SHALL BE:

A) "REBEL" OR "FALCON" FESCUE SEED (TILL APRIL 15TH) WITH 95% GERMINATION AND 8 LBS. PER 1,000 S.F.

B) BERMUDA SEED (FROM APRIL 15TH TO AUGUST 15TH) WITH 95% GERMINATION AND 2 LBS. PER 1,000 S.F.

3. SOIL AMENDMENT SHALL BE RECOMMENDED USING LIME OR SULFUR TO ACHIEVE A SOIL PH OF 5.5 - 6.5.

4. 2-4-D ROUNDUP OR EQUIVALENT POST-EMERGENT HERBICIDE SHALL BE REQUIRED TO KILL EXISTING WEEDS. TREFLAN, DACTAL OR EQUIVALENT PRE-EMERGENT HERBICIDE SHALL BE REQUIRED FOR ALL SEEDED AREAS TO PREVENT WEED GERMINATION.

5. PROTECTION OF SEEDED AREAS ON STEEP SLOPES SHALL BE PROVIDED USING A STANDARD EXCELSIOR EROSION CONTROL BLANKET, BY EROSION CONTROL SYSTEMS, INC. TUSCALOOSA, AL, OR EQUIVALENT WHERE INDICATED ON THE GRADING PLAN. APPLICATION OF "EXCELSIOR" BLANKET SHALL COMPLY WITH MANUFACTURER'S RECOMMENDATIONS. APPLY BLANKET TO THE SLOPE AFTER PROPER PREPARATION AND SEEDING OF GROUND.

SHEAR KEY DETAIL

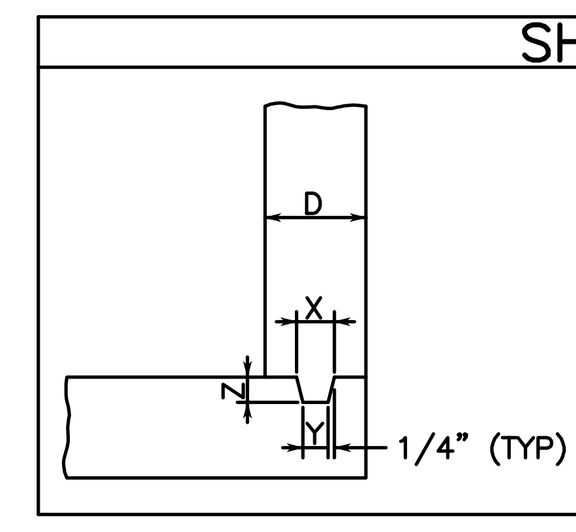

WALL THICKNESS (D)	NOMINAL KEY SIZE	X	Y	Z
4" - 7"	2" X 2"	1 1/2"	1"	1 1/2"
8" - 13"	2" X 4"	3 1/2"	3"	1 1/2"
14" - 20"	2" X 6"	5 1/2"	5"	1 1/2"
SEE DRAWINGS	2" X 8"	7 1/4"	6 3/4"	1 1/2"
	2" X 10"	9 1/4"	8 3/4"	1 1/2"
	4" X 4"	3 1/2"	3"	3 1/2"
	4" X 6"	5 1/2"	5"	3 1/2"
	4" X 8"	7 1/4"	6 3/4"	3 1/2"
	4" X 10"	9 1/4"	8 3/4"	3 1/2"
	4" X 12"	11 1/4"	10 3/4"	3 1/2"

CONCRETE AIR CONTENT TABLE

NOMINAL MAXIMUM SIZE COARSE AGGREGATE (INCHES)	TOTAL AIR CONTENT PERCENT BY VOLUME
3/4	4 TO 8
1	3.5 TO 6.5
1 1/2	3 TO 6

DOWEL BAR SPACING TABLE

d	SPACING
6"	18" O.C.
9"	15" O.C.
12"	12" O.C.
16"	8" O.C.

BAR BEND TABLE

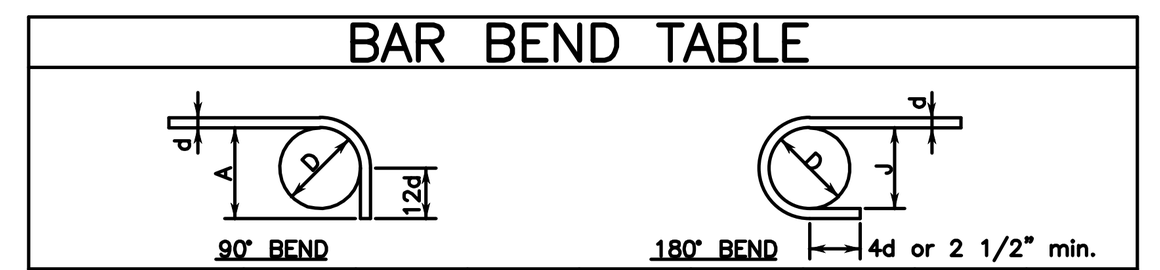

BAR SIZE	#3	#4	#5	#6	#7	#8	#9	#10
DIAMETER (d)	0.375"	0.5"	0.625"	0.75"	.875"	1.0"	1.128"	1.27"
D	2.25"	3.0"	3.75"	4.50"	5.25"	6.0"	9.02"	10.16"
A	6"	8"	10"	12"	14"	16"	19"	22"
J	3"	4"	5"	6"	7"	8"	11.25"	12.75"

UNLESS OTHERWISE INDICATED SHEAR KEY SIZES SHALL BE IN ACCORDANCE WITH THE FOLLOWING TABLE

WALL THICKNESS (D)	SHEAR KEY SIZE
4" - 7"	2" X 2"
8" - 13"	2" X 4"
14" - 20"	2" X 6"
21" - 26"	2" X 8"

LAP SPLICE AND MINIMUM BAR EMBEDMENT TABLE

BAR SIZE	LAP SPLICE LENGTH	EMBEDMENT LENGTH
#4	20"	12"
#5	26"	15"
#6	33"	19"
#7	45"	26"
#8	59"	35"
#9	74"	44"
#10	95"	56"

SLUMP TABLE

TYPE OF CONSTRUCTION	SLUMP (INCHES) MAX.	MIN.
REINFORCED FOOTINGS AND SLABS	3	1
REINFORCED WALLS	4	1
BACKFILL CONCRETE	6	3

NOTE: ALL CONSTRUCTION JOINTS SHALL HAVE CONTINUOUS SHEAR KEYS CONSTRUCTED IN ACCORDANCE WITH THE SHEAR KEY DETAIL

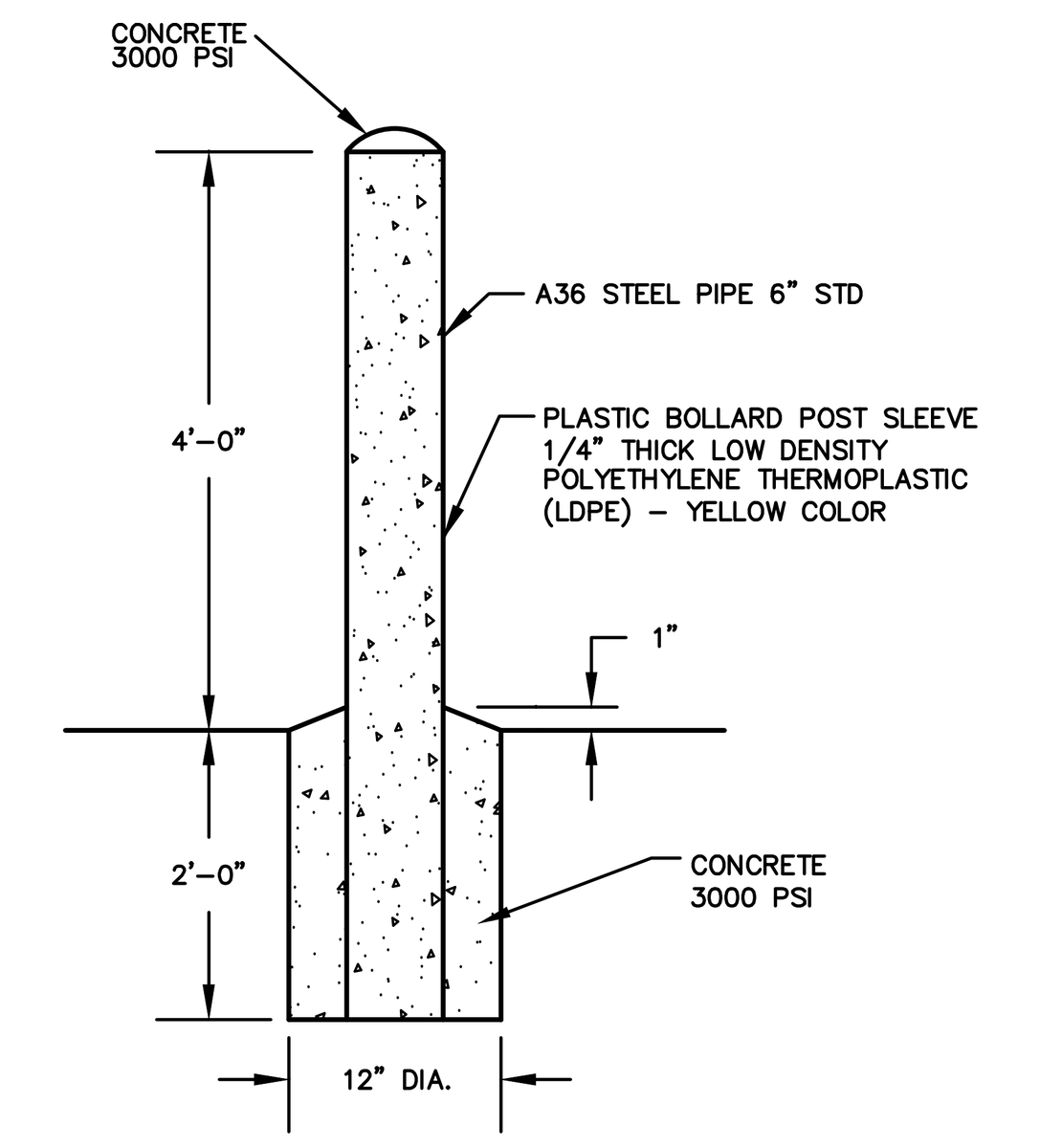

GENERAL NOTES

CONCRETE:
ALL CONCRETE SHALL BE 3,000 PSI, 28 DAY COMPRESSIVE STRENGTH.

REINFORCING:
ALL REINFORCEMENT SHALL BE DEFORMED BAR, GRADE 60.

2 / 7.0 BOLLARD DETAIL
NOT TO SCALE

NOTE:
WITHIN ALDOT RIGHT-OF-WAY, 30" CURB & GUTTER SHALL BE UTILIZED PER ALDOT 623XY. TAPER DOWN TO 24" CURB & GUTTER OUTSIDE ALDOT RIGHT-OF-WAY OVER A MINIMUM OF 10'.

CONSTRUCTION JOINTS MAY BE FORMED BY 1/8" METAL PLATES REMOVED AFTER FINISHING OR BY CUTTING SLAB AT 25 FOOT O.C. MAX. TO 1/3 OF FULL DEPTH. ROUND ALL EDGES WITH 1/4 INCH RADIUS GROOVE FINISHING TOOL.

1/2" PREMOLDED EXPANSION JOINT (BITUMINOUS) USE NEXT TO BUILDINGS, STRUCTURES AND CURBS SPACING AT 75 FOOT O.C. MAX. ALL EDGES AND JOINTS TO BE ROUNDED TO 1/4 INCH RAD.

NOTE: TRANSITION FROM STANDARD TO SPILL CURB OVER 10' - TYPICAL

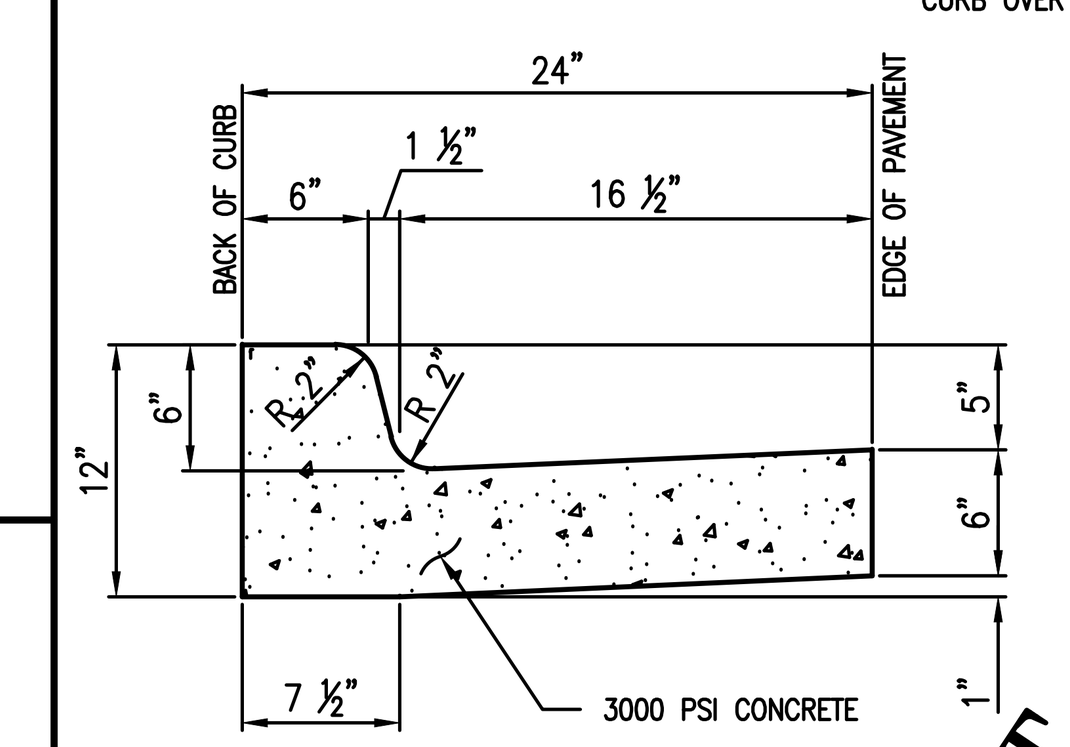

3 / 7.0 24" STANDARD CURB AND GUTTER
NOT TO SCALE

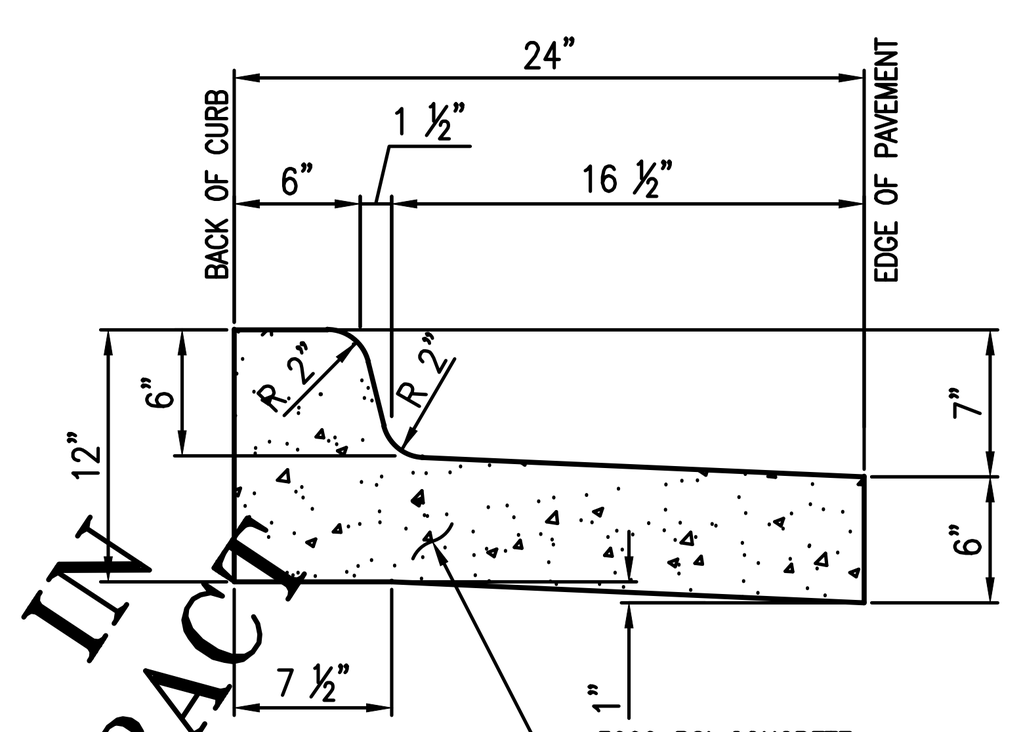

4 / 7.0 24" SPILL CURB AND GUTTER
NOT TO SCALE

NOT IN CONTRACT

ADJUST CURB DIMENSIONS TO MATCH EXISTING CURB AT TIE IN IF REQ'D.

CONSTRUCTION JOINTS MAY BE FORMED BY 1/8" METAL PLATES REMOVED AFTER FINISHING OR BY CUTTING SLAB AT 25 FOOT O.C. MAX. TO 1/3 OF FULL DEPTH. ROUND ALL EDGES WITH 1/4 INCH RADIUS GROOVE FINISHING TOOL.

1/2" PREMOLDED EXPANSION JOINT (BITUMINOUS) USE NEXT TO BUILDINGS, STRUCTURES AND CURBS SPACING AT 75 FOOT O.C. MAX. ALL EDGES AND JOINTS TO BE ROUNDED TO 1/4 INCH RAD.

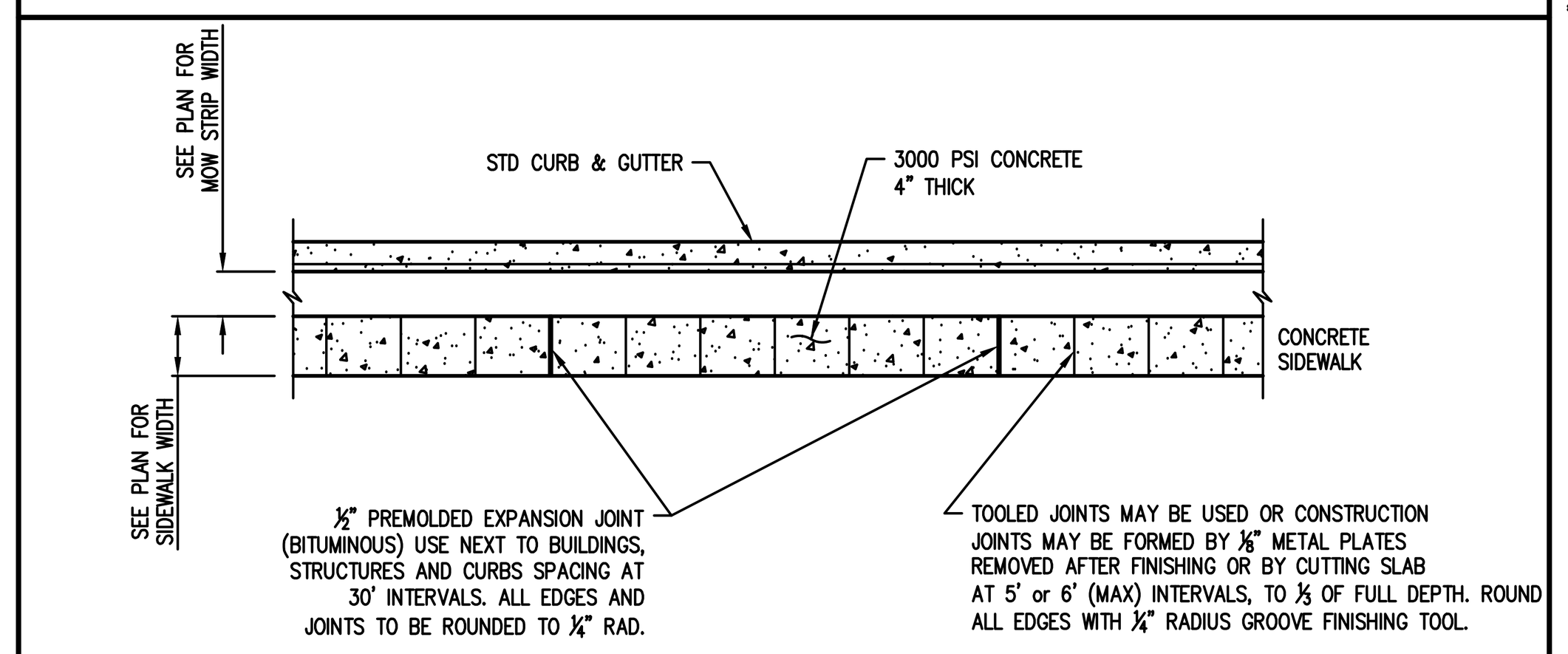

5 / 7.0 STANDARD CONCRETE SIDEWALK
NOT TO SCALE

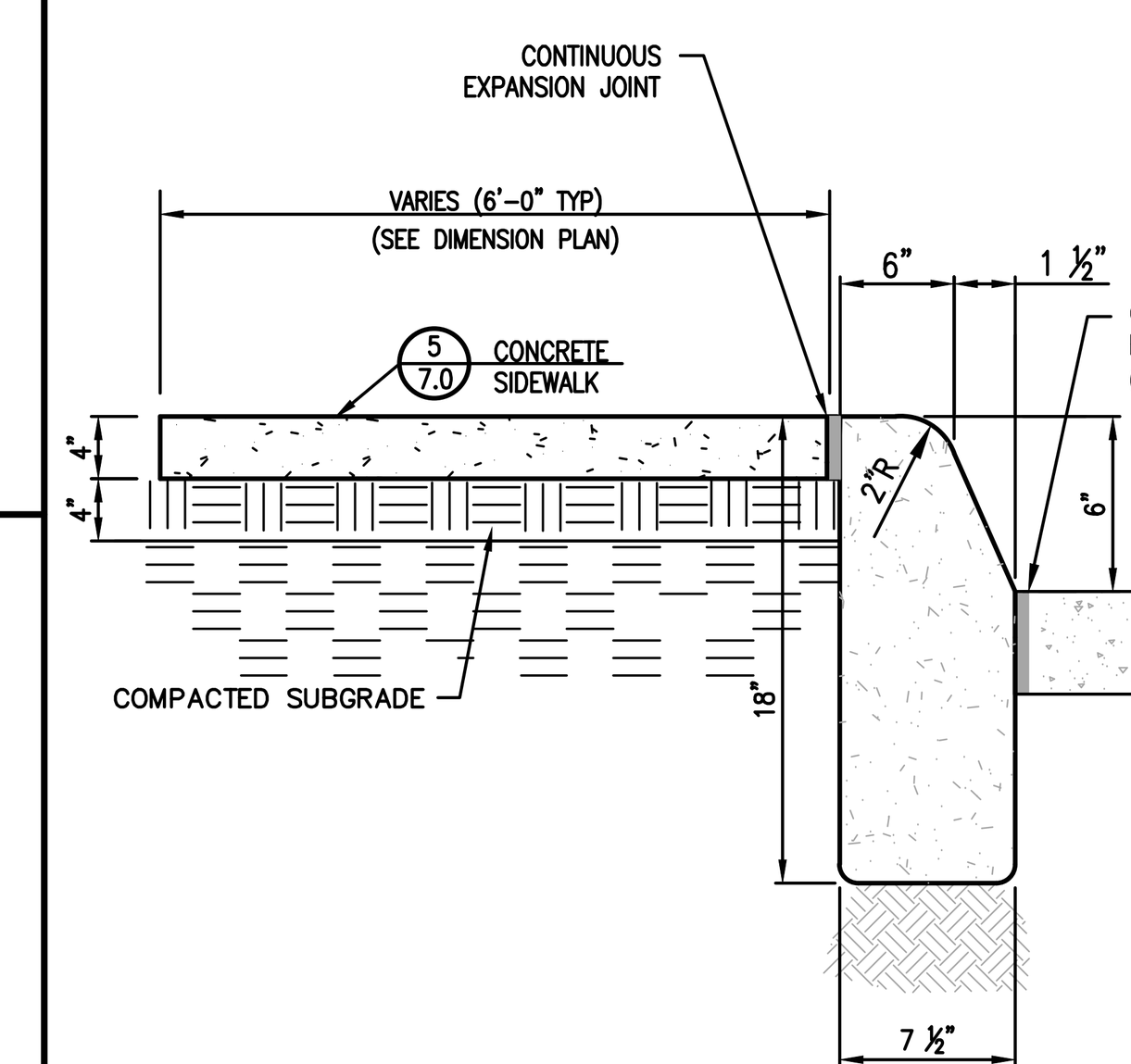

6 / 7.0 VERTICAL CONCRETE CURB
NOT TO SCALE

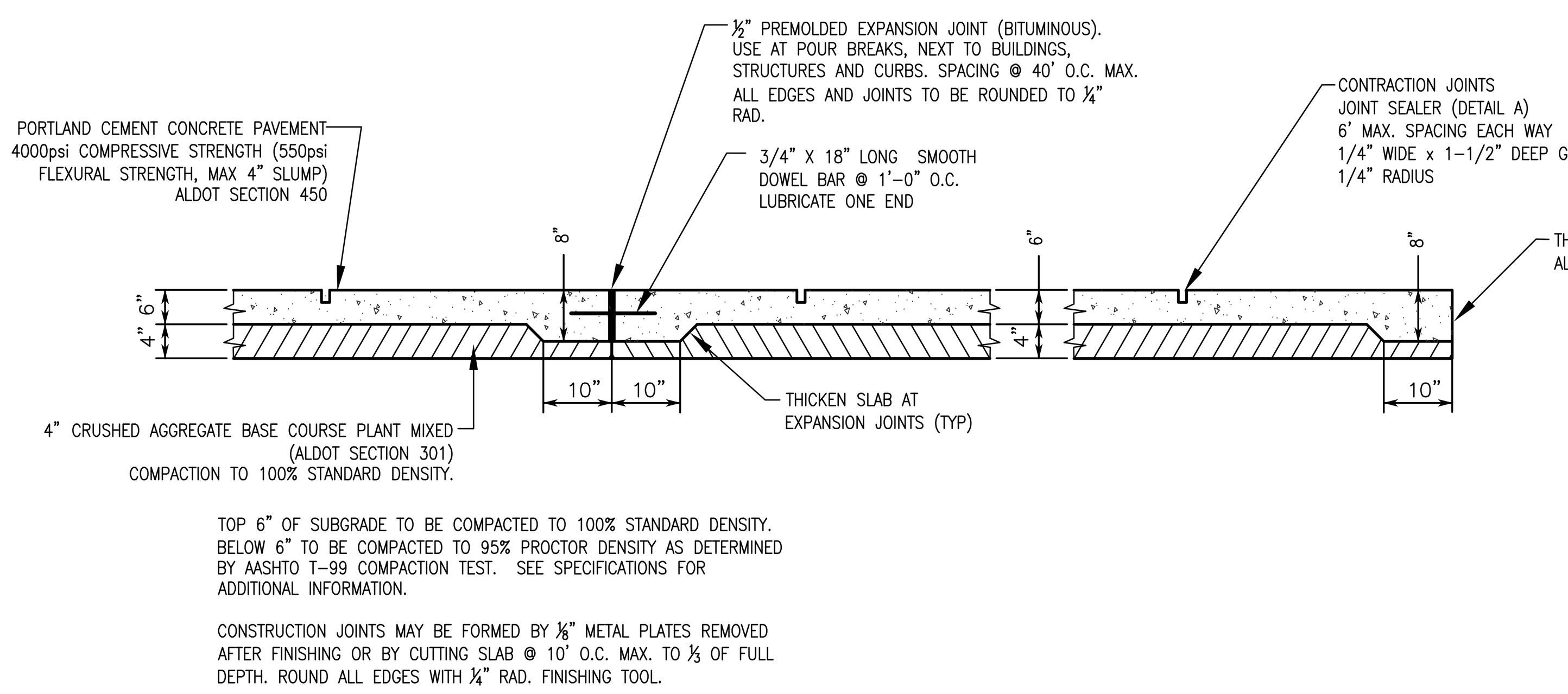

TOP 6" OF SUBGRADE TO BE COMPACTED TO 100% STANDARD DENSITY. BELOW 6" TO BE COMPACTED TO 95% PROCTOR DENSITY AS DETERMINED BY AASHTO T-99 COMPACTION TEST. SEE SPECIFICATIONS FOR ADDITIONAL INFORMATION.

CONSTRUCTION JOINTS MAY BE FORMED BY ⅛" METAL PLATES REMOVED AFTER FINISHING OR BY CUTTING SLAB @ 10' O.C. MAX. TO ⅓ OF FULL DEPTH. ROUND ALL EDGES WITH ¼" RAD. FINISHING TOOL.

1 / 7.0 HEAVY-DUTY CONCRETE PAVEMENT SECTION
NOT TO SCALE

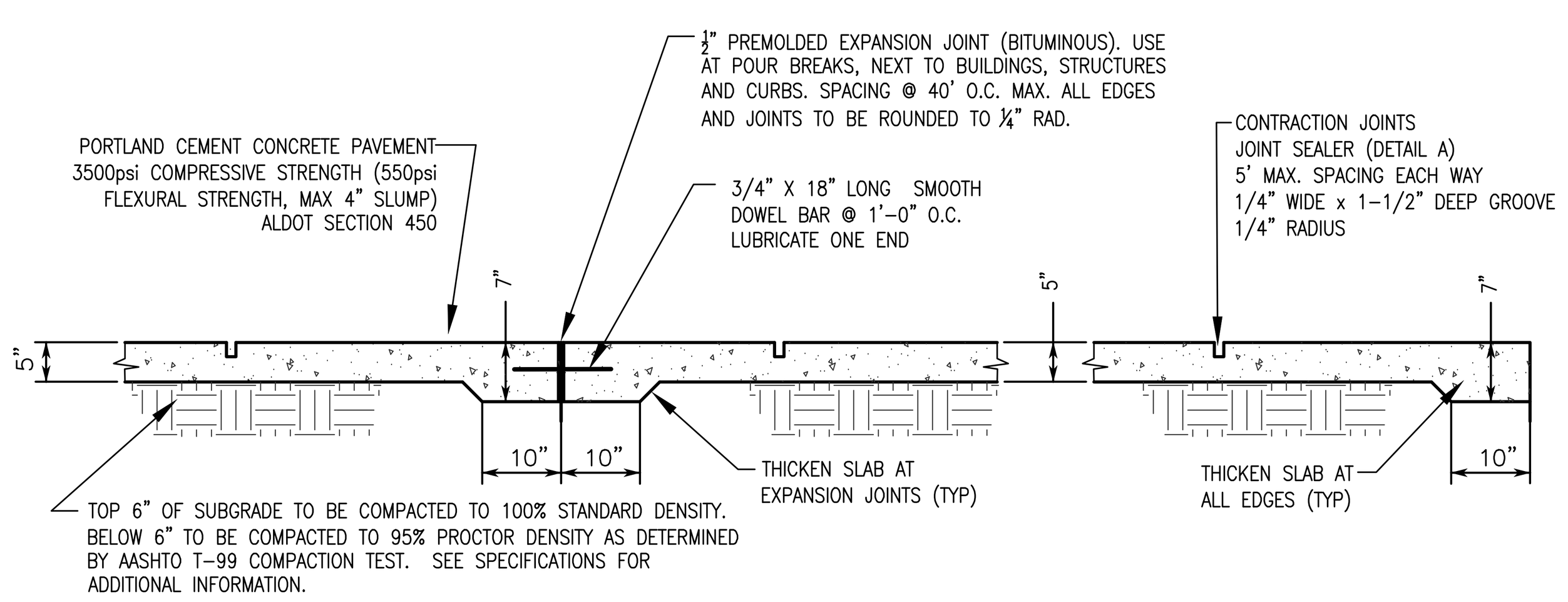

1 / 7.0 LIGHT-DUTY CONCRETE PAVEMENT SECTION
NOT TO SCALE

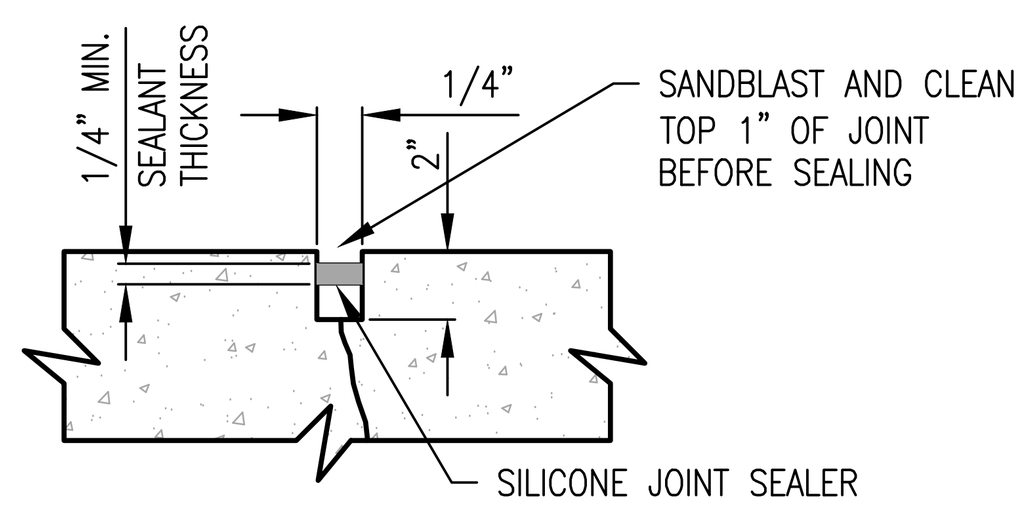

TYPE "A"-CONTRACTION JOINT
JOINT SEALER & SAW CUT JOINT

CONCRETE PAVEMENT SECTION
NOT TO SCALE

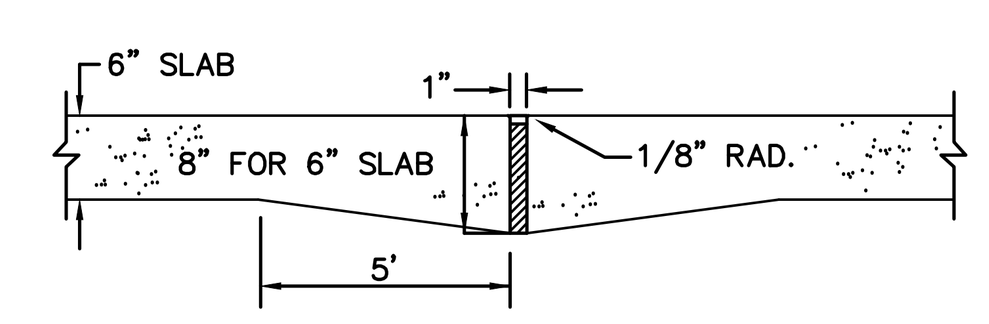

EXPANSION JOINT

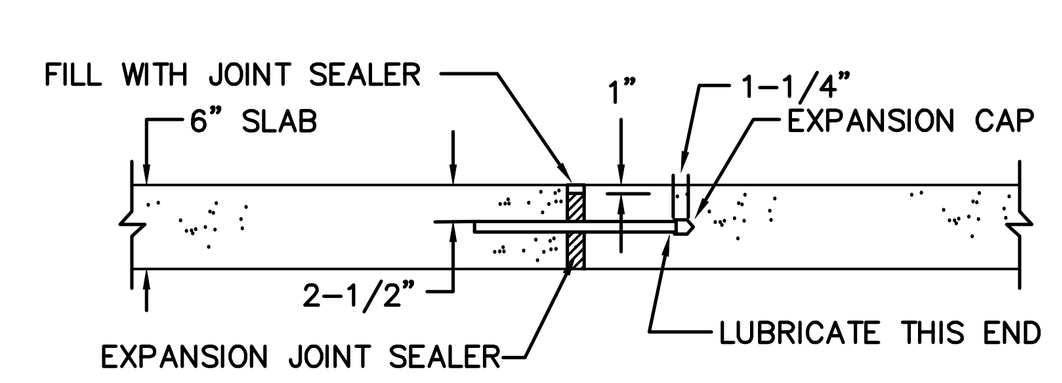

ALTERNATE EXPANSION JOINT

TYPE "A"
NOT TO SCALE

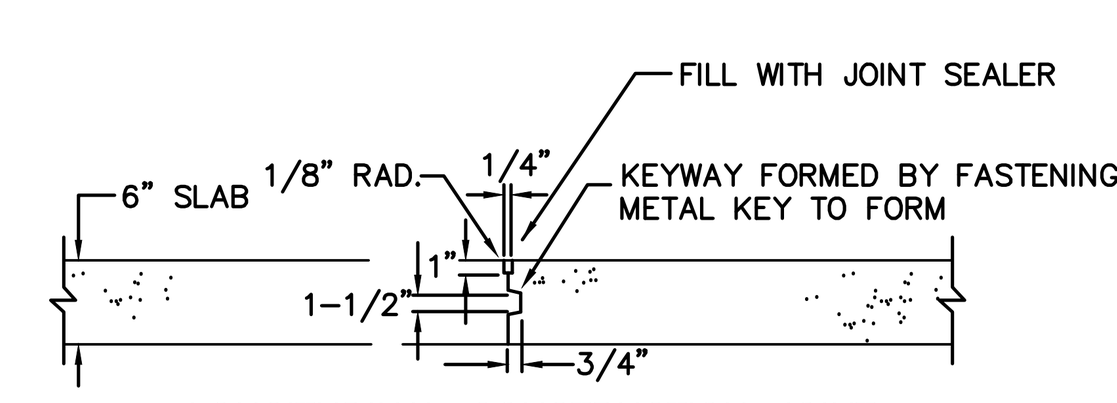

LONGITUDINAL CONSTRUCTION JOINT

TYPE "B"
NOT TO SCALE

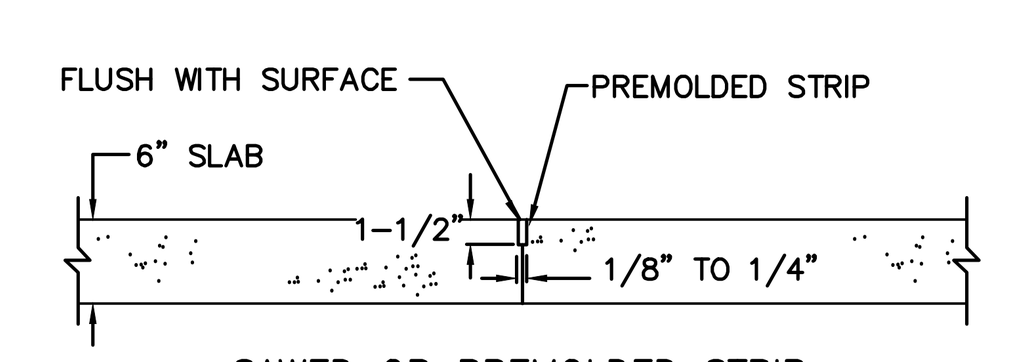

SAWED OR PREMOLDED STRIP

TYPE "C"
NOT TO SCALE

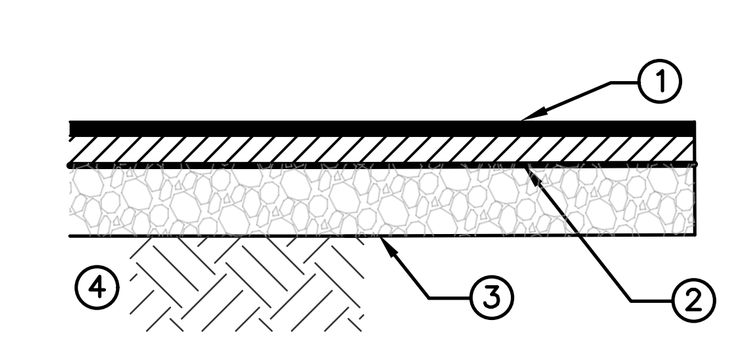

ALL FINAL SOIL SUBGRADE MATERIAL REQUIRED FOR STRUCTURAL FILL SHOULD BE EVALUATED BY THE GEOTECHNICAL ENGINEER OF RECORD. PROOFROLLING OR OTHER TESTING METHODS WILL BE CONDUCTED IN ACCORDANCE WITH HUNTSVILLE CITY STANDARDS FOR PUBLIC PROJECTS.

IN AREAS WHERE ALLUVIUM AND OLD FILL ARE EXPOSED AT FINISHED SUBGRADE IT WILL NEED TO BE UNDERCUT TO STIFF RESIDUAL SOIL AND REPLACED WITH PROPERLY COMPACTED SELECT SOIL FILL OR #2 STONE. (SEE GEOTECHNICAL ENGR.'S RECOMMENDATIONS IN SOILS REPORT.)

NOTE:
PAVEMENT BUILD-UP RECOMMENDATIONS AND SOIL SUBGRADE REQUIREMENTS SHOWN IN THE GEOTECHNICAL ENGINEER'S REPORT SHALL TAKE PRECEDENCE OVER THESE PAVEMENT SPECIFICATIONS.

NOTE:
SEE ALDOT PLAN SPECIFICATIONS FOR ALL PAVEMENT SURFACES WITHIN THE STATE R.O.W.

LIGHT DUTY

1. ASPHALT SURFACE COURSE (2.0") (HOT MIX) ALDOT No. 424A, 1/2" MAX. AGG. SIZE, ESAL RANGE A/B
3. STONE BASE COURSE (6.0") ALDOT No. 825B (COMPACTED TO 100% STANDARD PROCTOR AS PER AASHTO T-99)
4. TOP 12" OF SUBGRADE TO BE COMPACTED TO 100% OF THE STANDARD PROCTOR MAXIMUM DRY DENSITY (SEE GEOTECHNICAL ENGINEER'S SPECIFICATIONS FOR ADDITIONAL INFORMATION & REQUIREMENTS).

HEAVY DUTY

1. ASPHALT SURFACE COURSE (1.5") (HOT MIX) ALDOT No. 424A, 1/2" MAX. AGG. SIZE, ESAL RANGE A/B
2. ASPHALT BINDER COURSE (3.0") ALDOT No. 424B 3/4" MAX. AGG. SIZE, ESAL RANGE A/B
3. STONE BASE COURSE (6.0") ALDOT No. 825B (COMPACTED TO 100% STANDARD PROCTOR AS PER AASHTO T-99)
4. TOP 12" OF SUBGRADE TO BE COMPACTED TO 100% OF THE STANDARD PROCTOR MAXIMUM DRY DENSITY (SEE GEOTECHNICAL ENGINEER'S SPECIFICATIONS FOR ADDITIONAL INFORMATION & REQUIREMENTS).

7 / 7.0 ASPHALT PAVEMENT SECTION
NOT TO SCALE

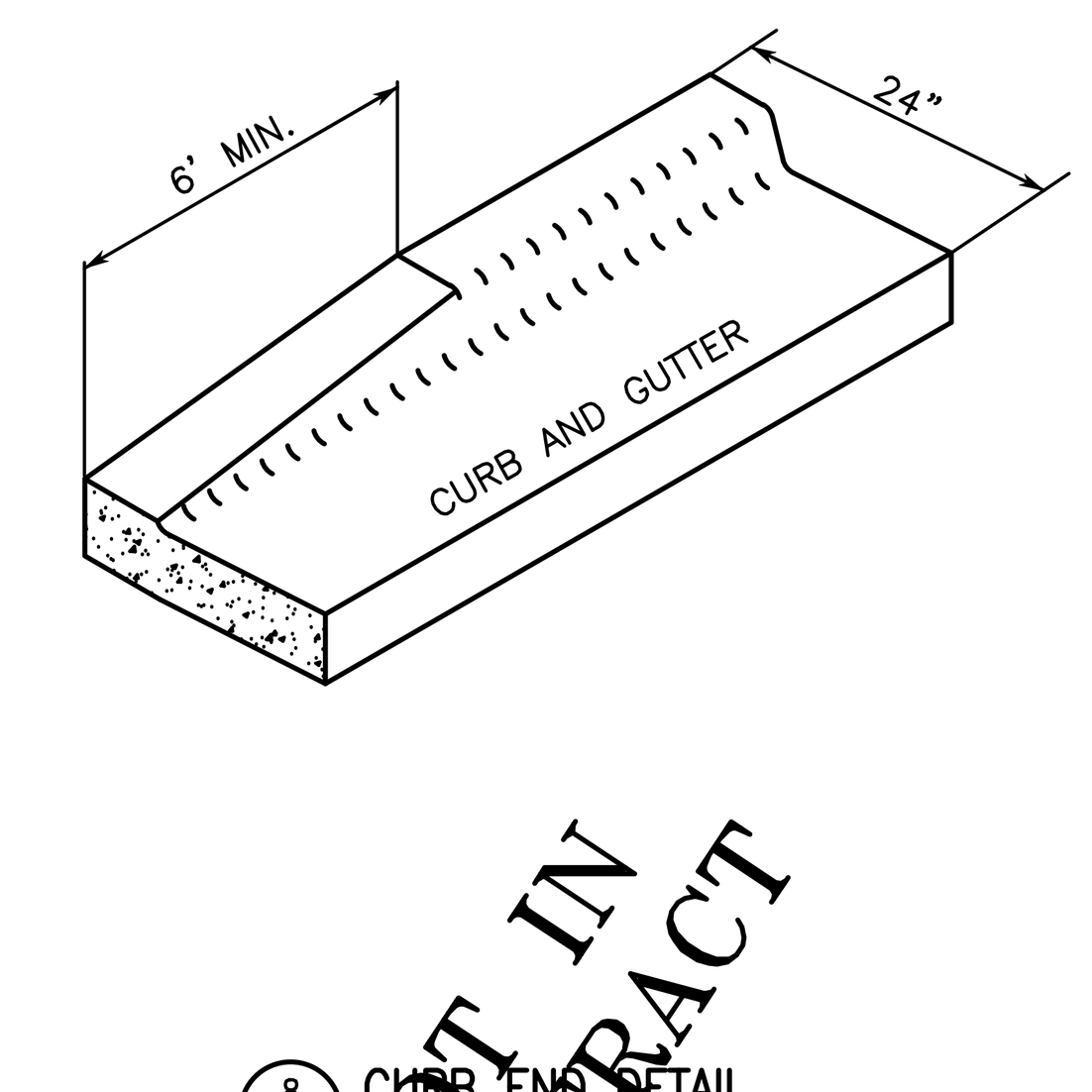

8 / 7.0 CURB END DETAIL
NOT TO SCALE

NOT IN CONTRACT

CLASSROOM ADDITION
FOR
UNION HILL SCHOOL
SOMERVILLE, ALABAMA
FOR THE
MORGAN COUNTY BOARD OF EDUCATION

McKEE and ASSOCIATES
ARCHITECTS, INC.
631 SOUTH HULL STREET, MONTGOMERY, ALABAMA 36104 (334) 834-9933

JOHNSON & ASSOCIATES
ENGINEERING SURVEYING
1218 CHURCH STREET
HUNTSVILLE, ALABAMA 35801
1-256-533-7331
FAX 1-256-533-7332

ALABAMA PROFESSIONAL ENGINEER
REGISTERED NO. 16690
NATHAN G. JOHNSON
10/13/2022

SHEET TITLE : CONSTRUCTION DETAILS

MCKEE JOB # : 22-134 / J&A 1949EN

DRAWN BY : RG

DATE: 10.13.2022

REVISED DATE:

REVISED DATE:

REVISED DATE:

SHEET NO. : C7.0

- T:\SubSite\1949EN, Union Hill Jr High Addition for McKee Architects\Civil 3D Design\Production Drawings\1949EN_C700_CONSTRUCTION DETAILS.DWG
- Thursday, October 13, 2022 5:16:55 PM

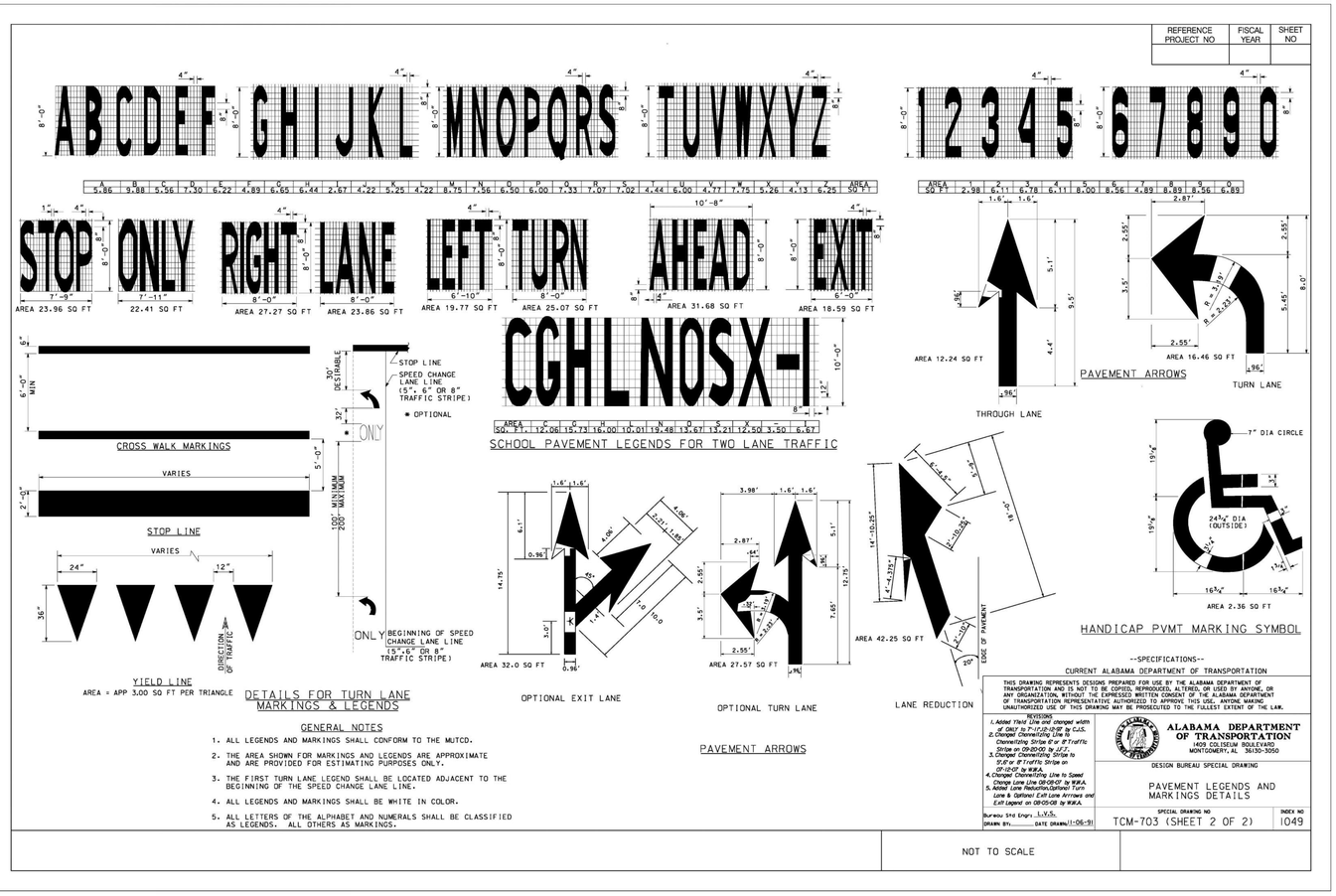

1 7.1 TRAFFIC STRIPING AND PARKING STRIPING
NOT TO SCALE

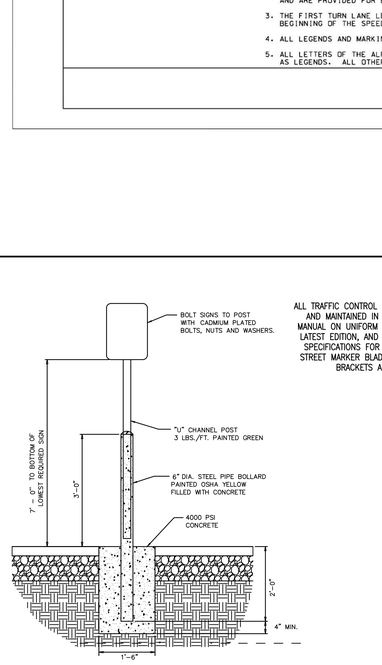

ALL TRAFFIC CONTROL DEVICES SHALL BE ERECTED AND MAINTAINED IN CONFORMANCE WITH THE MANUAL ON UNIFORM TRAFFIC CONTROL DEVICES, LATEST EDITION, AND IN ACCORDANCE WITH THE SPECIFICATIONS FOR TRAFFIC CONTROL SIGNS, STREET MARKER BLADES, SIGNPOSTS, MOUNTING BRACKETS AND INSTALLATION.

3 7.1 SIGN DETAILS
NOT TO SCALE

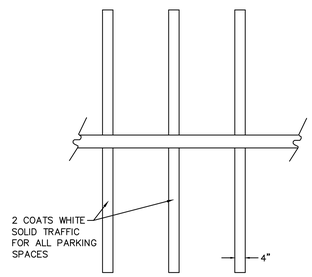

NOTE:
1) SEE DIMENSION PLAN FOR PARKING DIMENSIONS & LAYOUT.

2) USE BLUE TRAFFIC PAINT FOR ALL HANDICAP STRIPING, SYMBOLS, ETC.

4 7.1 PARKING LOT STRIPING DETAIL
NOT TO SCALE

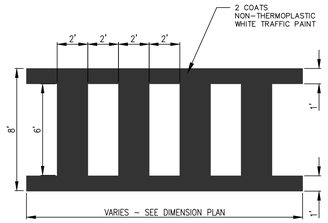

5 7.1 PEDESTRIAN CROSSWALK
NOT TO SCALE

NOT IN CONTRACT

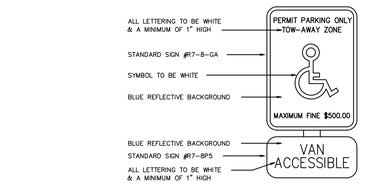

1. ALL SIGNS TO BE 0.080" THICK ALUMINUM
2. ALL SIGNS SHALL CONFORM WITH ALL CURRENT A.D.A. FEDERAL, STATE AND LOCAL CODES AND REGULATIONS.
3. PLACE "VAN ACCESSIBLE" SIGN IN FRONT OF VAN ACCESSIBLE SPACES ONLY.

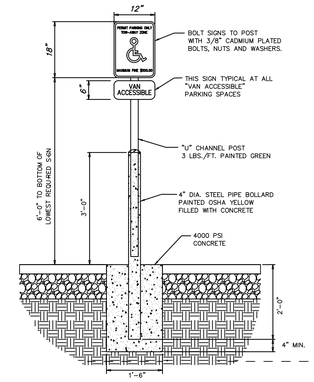

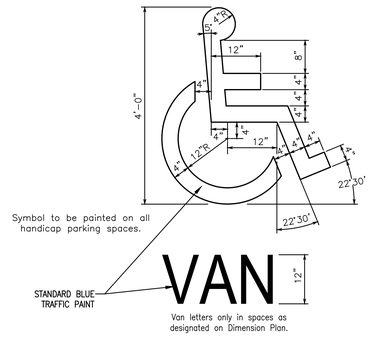

2 7.1 HANDICAP PARKING SIGN & PAINTED SYMBOL
NOT TO SCALE
ONE AT EACH HANDICAP SPACE.
WHERE HANDICAP SPACES FACE EACH OTHER WITHOUT WALKWAY, THERE SHALL BE ONE POST WITH SIGNS MOUNTED BOTH SIDES

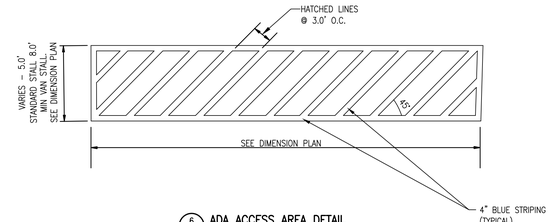

6 7.1 ADA ACCESS AREA DETAIL
NOT TO SCALE

CLASSROOM ADDITION
FOR
UNION HILL SCHOOL
SOMERVILLE, ALABAMA
FOR THE
MORGAN COUNTY BOARD OF EDUCATION

JOHNSON & ASSOCIATES SURVEYING
ENGINEERING
1218 CHURCH STREET
DECATUR, ALABAMA 35601
PH 1-256-353-7330
FAX 1-256-353-7332

McKEE and ASSOCIATES
ARCHITECTS, INC.
631 SOUTH HULL STREET, MONTGOMERY, ALABAMA 36104 (334) 834-9933



SHEET TITLE : CONSTRUCTION DETAILS

MCKEE JOB # : 22-134 / J&A 1949EN

DRAWN BY : RG

DATE: 10.13.2022

REVISED DATE:

REVISED DATE:

REVISED DATE:

SHEET NO. : C7.1

- T:\SubSite1949EN, Union Hill Jr High Addition for McKee Architects\Civil 3D Design\Production Drawings\1949EN_C700_CONSTRUCTION DETAILS.DWG
- Thursday, October 13, 2022 5:17:07 PM

DETAIL CALL-OUTS: ⚠1

1. RAMPS
   - 12'-0" MAX LENGTH
   - 8.3% (12:1) MAX RUNNING SLOPE
   - 5.0% (20:1) MIN RUNNING SLOPE
   - 2.0% (50:1) MAX CROSS SLOPE
2. FLARE
   - 10.0% (10:1) MAX RUNNING SLOPE
3. LANDING / TURNING SPACE
   - 5.0% (20:1) MAX GRADE IN ANY DIRECTION
   - 2.0% (50:1) MAX CROSS SLOPE
4. BLENDED TRANSITIONS
   - 5.0% (20:1) MAX RUNNING SLOPE
5. SIDEWALK
   - 5.0% (20:1) MAX RUNNING SLOPE ⚠3
   - 2.0% (50:1) MAX CROSS SLOPE ⚠3
6. DRIVEWAY
   - 11.3% (12.5:1) MAX CHANGE IN GRADE BETWEEN ROAD SURFACES AND DRIVEWAY
   - 8.3% (12.5:1) MAX CHANGE IN GRADE BETWEEN DRIVEWAY AND SIDEWALK

GENERAL NOTES FOR CURB RAMPS AND SIDEWALKS:

1. WHERE THE TURNING SPACE IS CONSTRAINED AT THE BACK-OF-SIDEWALK SUCH AS AT A PERPENDICULAR RAMP, THE TURNING SPACE SHALL BE A MINIMUM OF 4'-0" WIDE BY 5'-0" MIN. THE 5'-0" DIMENSION SHALL BE PROVIDED IN THE DIRECTION OF THE RAMP RUN.
2. SIDEWALK, RAMP, AND CURB RAMP SURFACES SHALL BE NON-SKID PREPARED BY BRUSHING.
3. 2% (50:1) OR LESS IS CONSIDERED FLAT.
4. ⚠2 INSTALL EXPANSION JOINT MATERIAL WHERE NEW CONSTRUCTION MEETS EXISTING SIDEWALKS, CURBS, GUTTERS, OR FOUNDATIONS. THE CONSTRUCTION JOINT SHALL BE SEALED WITH THE REQUIREMENT OF SECTION 832-01 AND SEALED IN ACCORDANCE WITH SECTION 832-02.
5. THE SUBGRADE SHALL BE FREE OF ALL ROOTS AND OTHER UNDESIRABLE MATERIALS WITH THE ROOTS CUT BACK ONE (1) FOOT FROM FACE OF SIDEWALK.
6. SIDEWALKS, RAMPS, LANDINGS, AND CURB RAMPS SHALL BE FOUR (4) INCHES THICK UNLESS NOTED OTHERWISE.
7. RAMP AND CURB RAMP GRADES/SLOPE (IN THE DIRECTION OF PEDESTRIAN TRAVEL) SHALL NOT EXCEED 8.3% (12:1).

⚠1 GUTTER COUNTER SLOPE SHALL NOT EXCEED 5.0% (20:1).

⚠1 WITHIN THE STREET OR HIGHWAY RIGHT-OF-WAY, THE GRADE OF THE PEDESTRIAN ACCESS ROUTES SHALL NOT EXCEED THE GENERAL GRADE ESTABLISHED FOR THE ADJACENT STREET OR HIGHWAY. WHERE PEDESTRIAN ACCESS ROUTES ARE NOT ADJACENT TO A STREET OR HIGHWAY RIGHT-OF-WAY, THEY SHALL HAVE A MAXIMUM SLOPE OF 20:1 (5.0%).

⚠1 PROVIDE A TWO (2) FEET MINIMUM TRANSITION STRIP IF ALGEBRAIC DIFFERENCE BETWEEN ROADWAY SLOPE AND CURB RAMP SLOPE ARE GREATER THAN 9:1 (11.0%). TRANSITION STRIP SHALL NOT EXCEED 2.0% (50:1).

⚠1 DETECTABLE WARNING SURFACES MUST BE TWO (2) FEET IN LENGTH IN THE DIRECTION OF TRAVEL AND THE WIDTH OF THE CURB RAMP, EXCLUDING FLARES. CURB RAMP, THE DETECTABLE WARNING MATERIAL AND MANUFACTURER SHALL BE FROM THE ALABAMA DEPARTMENT OF TRANSPORTATION LIST OF QUALIFIED MATERIAL. THE COLOR OF THE DETECTABLE WARNING SURFACE SHALL BE APPROVED / SCHEDULED BY THE ENGINEER THAT SHALL CONTRAST THE SURROUNDING SURFACES (LIGHT-ON-DARK OR DARK-ON-LIGHT).

⚠1 VERTICAL SURFACE DISCONTINUITIES SHALL BE 0.50 INCH MAXIMUM. VERTICAL SURFACE DISCONTINUITIES BETWEEN 0.25 AND 0.5 INCH SHALL BE BEVELED WITH A SLOPE NOT GREATER THAN 2:1 (50.0%).

⚠1 DOMES SHALL BE PARALLEL TO THE RAMP SO THAT THE WHEELCHAIR WHEELS CAN TRAVEL BETWEEN THE DOMES.

⚠1 THESE MAXIMUM SLOPES SHALL NOT BE EXCEEDED.

⚠1 TO PREVENT STANDING WATER AT THE BASE OF CURB RAMPS, LOCATE STORM DRAIN INLETS UPSTREAM.

GUTTER SLOPE TRANSITIONS

CHANGE OF GRADE LIMITATIONS

EXPANSION JOINT DETAILS

PREFABRICATED MAT OPTION (INLAID)

BRICK PAVER OPTION

-SPECIFICATIONS-
CURRENT ALABAMA DEPARTMENT OF TRANSPORTATION

THIS DRAWING REPRESENTS DESIGNS PREPARED FOR USE BY THE ALABAMA DEPARTMENT OF TRANSPORTATION. ANY ALTERATION OF THIS DRAWING BY ANY PERSON, FIRM, OR CORPORATION, WITHOUT THE EXPRESSED WRITTEN CONSENT OF THE ALABAMA DEPARTMENT OF TRANSPORTATION REPRESENTATIVE AUTHORIZED TO APPROVE THIS USE, ANYONE MAKING UNAUTHORIZED USE OF THIS DRAWING MAY BE PROSECUTED TO THE FULLEST EXTENT OF THE LAW.

ALABAMA DEPARTMENT OF TRANSPORTATION
1409 COLISEUM BOULEVARD
MONTGOMERY, AL 36110-2060

DESIGN BUREAU SPECIAL DRAWING

CURB RAMP DETAIL CALLOUTS, GENERAL NOTES FOR CURB RAMPS AND SIDEWALKS, AND DETAILS

SPECIAL DRAWING NO.: SW-618 (SHEET 1 OF 4)
INDEX NO.: 734

NOT TO SCALE

TYPE 1: PARALLEL CORNER

TYPE 3: PERPENDICULAR CORNER

TYPE 1A: PARALLEL CORNER

TYPE 3A: PERPENDICULAR CORNER

TYPE 3C: PERPENDICULAR CORNER

TYPE 2: BLENDED CORNER

TYPE 3B: PERPENDICULAR CORNER

•SEE SHEET 1 OF 4 FOR DETAIL CALL-OUTS ⚠1, ⚠2, ⚠3.
•SEE SHEET 1 OF 4 FOR GENERAL NOTES FOR CURB RAMPS AND SIDEWALKS.

-SPECIFICATIONS-
CURRENT ALABAMA DEPARTMENT OF TRANSPORTATION

THIS DRAWING REPRESENTS DESIGNS PREPARED FOR USE BY THE ALABAMA DEPARTMENT OF TRANSPORTATION. ANY ALTERATION OF THIS DRAWING BY ANY PERSON, FIRM, OR CORPORATION, WITHOUT THE EXPRESSED WRITTEN CONSENT OF THE ALABAMA DEPARTMENT OF TRANSPORTATION REPRESENTATIVE AUTHORIZED TO APPROVE THIS USE, ANYONE MAKING UNAUTHORIZED USE OF THIS DRAWING MAY BE PROSECUTED TO THE FULLEST EXTENT OF THE LAW.

ALABAMA DEPARTMENT OF TRANSPORTATION
1409 COLISEUM BOULEVARD
MONTGOMERY, AL 36110-2060

DESIGN BUREAU SPECIAL DRAWING

CORNER CURB RAMPS

SPECIAL DRAWING NO.: SW-618 (SHEET 2 OF 4)
INDEX NO.: 735

NOT TO SCALE

TYPE 1: PERPENDICULAR MIDBLOCK

TYPE 2: PARALLEL MIDBLOCK

TYPE 3: COMBINATION MIDBLOCK

TYPE 1A: PERPENDICULAR MIDBLOCK

TYPE 2A: PARALLEL MIDBLOCK

TYPE 4: PERPENDICULAR MIDBLOCK

NOTE:
THIS DETAIL HAS BEEN MODIFIED BY JOHNSON & ASSOCIATES

•SEE SHEET 1 OF 4 FOR DETAIL CALL-OUTS ⚠1, ⚠2, ⚠3.
•SEE SHEET 1 OF 4 FOR GENERAL NOTES FOR CURB RAMPS AND SIDEWALKS.

-SPECIFICATIONS-
CURRENT ALABAMA DEPARTMENT OF TRANSPORTATION

THIS DRAWING REPRESENTS DESIGNS PREPARED FOR USE BY THE ALABAMA DEPARTMENT OF TRANSPORTATION. ANY ALTERATION OF THIS DRAWING BY ANY PERSON, FIRM, OR CORPORATION, WITHOUT THE EXPRESSED WRITTEN CONSENT OF THE ALABAMA DEPARTMENT OF TRANSPORTATION REPRESENTATIVE AUTHORIZED TO APPROVE THIS USE, ANYONE MAKING UNAUTHORIZED USE OF THIS DRAWING MAY BE PROSECUTED TO THE FULLEST EXTENT OF THE LAW.

ALABAMA DEPARTMENT OF TRANSPORTATION
1409 COLISEUM BOULEVARD
MONTGOMERY, AL 36110-2060

DESIGN BUREAU SPECIAL DRAWING

MIDBLOCK CURB RAMPS

SPECIAL DRAWING NO.: SW-618 (SHEET 3 OF 4)
INDEX NO.: 736

NOT TO SCALE

TYPE 1: DRIVEWAY CROSSING
(NOTE: DRIVEWAY AND SIDEWALK SURFACES AT SAME ELEVATION)

TYPE 4: DRIVEWAY CROSSING
(NOTE: DRIVEWAY AND SIDEWALK SURFACES AT SAME ELEVATION)

TYPE 2: TURN-LANE ISLAND CUT-THROUGH OPENING

TYPE 2: DRIVEWAY CROSSING
(NOTE: DRIVEWAY AND SIDEWALK SURFACES AT SAME ELEVATION)

TYPE 1: MEDIAN OR ISLAND CUT-THROUGH OPENING

TYPE 3: RAILROAD CROSSING

TYPE 3: DRIVEWAY CROSSING
(NOTE: DRIVEWAY SURFACE AT LOWER ELEVATION THAN SIDEWALK SURFACE)

TYPE 3A: DRIVEWAY CROSSING
(NOTE: DRIVEWAY SURFACE AT LOWER ELEVATION THAN SIDEWALK SURFACE)

•SEE SHEET 1 OF 4 FOR DETAIL CALL-OUTS ⚠1, ⚠2, ⚠3, ⚠4, ⚠5, ⚠6.
•SEE SHEET 1 OF 4 FOR GENERAL NOTES FOR CURB RAMPS AND SIDEWALKS.

-SPECIFICATIONS-
CURRENT ALABAMA DEPARTMENT OF TRANSPORTATION

THIS DRAWING REPRESENTS DESIGNS PREPARED FOR USE BY THE ALABAMA DEPARTMENT OF TRANSPORTATION. ANY ALTERATION OF THIS DRAWING BY ANY PERSON, FIRM, OR CORPORATION, WITHOUT THE EXPRESSED WRITTEN CONSENT OF THE ALABAMA DEPARTMENT OF TRANSPORTATION REPRESENTATIVE AUTHORIZED TO APPROVE THIS USE, ANYONE MAKING UNAUTHORIZED USE OF THIS DRAWING MAY BE PROSECUTED TO THE FULLEST EXTENT OF THE LAW.

ALABAMA DEPARTMENT OF TRANSPORTATION
1409 COLISEUM BOULEVARD
MONTGOMERY, AL 36110-2060

DESIGN BUREAU SPECIAL DRAWING

SIDEWALKS & CURB RAMPS AT DRIVEWAYS, RAILROAD, MEDIAN, & ISLAND CROSSINGS

SPECIAL DRAWING NO.: SW-618 (SHEET 4 OF 4)
INDEX NO.: 737

NOT TO SCALE

1 / 7.2 STANDARD HANDICAP RAMPS
NOT TO SCALE

CONTRACTOR SHALL CONSULT WITH THE CONTROLLING MUNICIPALITY OR JURISDICTION WHEN DETERMINING RAMP/SIDEWALK TYPE PRIOR TO INSTALLATION. ALL CONSTRUCTION SHALL COMPLY WITH THE STANDARDS OUTLINED IN THE LATEST EDITION OF "PEDESTRIAN RIGHT-OF-WAY ACCESSIBILITY GUIDELINES" (PROWAG)

CLASSROOM ADDITION
FOR
UNION HILL SCHOOL
SOMERVILLE, ALABAMA
FOR THE
MORGAN COUNTY BOARD OF EDUCATION

JOHNSON & ASSOCIATES
ENGINEERING SURVEYING
1216 CHURCH STREET
DECATUR, ALABAMA 35601
PH 1-256-353-7330
FAX 1-256-353-7332

McKEE and ASSOCIATES
ARCHITECTS, INC.
631 SOUTH HULL STREET, MONTGOMERY, ALABAMA 36104 (334) 834-9933

ALABAMA
REGISTERED
NO. 16690
ENGINEER
NATHAN G. JOHNSON
10/13/2022

SHEET TITLE : CONSTRUCTION DETAILS

MCKEE JOB # : 22-134 / J&A 1949EN

DRAWN BY : RG

DATE: 10.13.2022

REVISED DATE:

REVISED DATE:

REVISED DATE:

SHEET NO. : C7.2

- T:\SubSite1949EN_Union Hill Jr High Addition for McKee Architects\Civil 3D Design\Production Drawings\1949EN_C700_CONSTRUCTION DETAILS.DWG
- Thursday, October 13, 2022 5:17:20 PM

Section 2723

Engineered Surface Drainage Products

GENERAL
PVC surface drainage inlets shall be of the curb inlet structure type as indicated on the contract drawings and referenced within the contract specifications. The **ductile iron frame, grate and hood** for each of these structures are to be considered an integral part of the surface drainage inlet and shall be furnished by the same manufacturer. The curb inlet structure shall be as manufactured by Nyloplast a division of Advanced Drainage Systems, Inc. or prior approved equal.

MATERIALS
The curb inlet structure required for this contract shall be manufactured from PVC pipe stock, utilizing a thermo-molding process to reform the pipe stock to the specified configuration. The drainage pipe connection stubs shall be manufactured form PVC pipe stock and formed to provide a watertight connection with the specified pipe system. This joint tightness shall conform to ASTM D3212 for joints for drain and sewer plastic pipe using flexible elastomeric seals. The flexible elastomeric seals shall conform to ASTM F477. The pipe bell spigot shall be joined to the main body of the structure. The raw material used to manufacture the pipe stock that is used to manufacture the main body and pipe stubs of the surface drainage inlets shall conform to ASTM D1784 cell class 12454.

The grate, frame and hood for all curb inlet structures shall be ductile iron and shall be made specifically for each so as to provide a round bottom flange that closely matches the diameter of the PVC structure body. The grate, frame and hood shall be capable of supporting H-20 wheel loading for traffic areas. The hood section will have a solid back and be adjustable by use of three (3) locking hex head bolts. The metal used in the manufacture of the castings shall conform to ASTM A536 grade 70-50-05 for ductile iron.

INSTALLATION
The specified PVC surface drainage inlet shall be installed using conventional flexible pipe backfill materials and procedures. The backfill material shall be crushed stone or other granular material meeting the requirements of class 1, class 2, or class 3 material as defined in ASTM D2321. Bedding and backfill for the curb inlet structure shall be placed and compacted uniformly in accordance with ASTM D2321. The curb inlet structure body will be cut at the time of the final grade. No brick, stone or concrete block will be required to set the grate to the final grade height. For H-20 load rated installations, a concrete ring will be poured under the frame, grate, and hood. The concrete slab must be designed taking into consideration local soil conditions, traffic loading, and other applicable design factors. For other installation considerations such as migration of fines, ground water, and soft foundations refer to ASTM D2321 guidelines.

CONTRACTOR MAY SUBSTITUTE AN EQUIVALENT PRODUCT FOR ANY OF THE YARD DRAIN BASINS OR INLINE DRAINS.

THIS PRINT DISCLOSES SUBJECT MATTER IN WHICH NYLOPLAST HAS PROPRIETARY RIGHTS. THE RECEIPT OR POSSESSION OF THIS PRINT DOES NOT CONFER, TRANSFER, OR LICENSE THE USE OF THE DESIGN OR TECHNICAL INFORMATION SHOWN HEREIN. REPRODUCTION OF THIS PRINT OR ANY INFORMATION CONTAINED HEREIN, OR MANUFACTURE OF ANY ARTICLE HEREFROM, FOR THE DISCLOSURE TO OTHERS IS FORBIDDEN, EXCEPT BY SPECIFIC WRITTEN PERMISSION FROM NYLOPLAST. 630134 (04-04-22)

DRAWN BY: CJA | DATE: 03-10-08 | REVISED BY: MMH | DATE: 03-10-16 | DWG SIZE: A | SCALE: 1:1 | SHEET: 1 OF 1 | MATERIAL | PROJECT NO./NAME

Nyloplast — 3128 VERONA AVE, BUFORD, GA 30518, PHN (770) 932-2443, FAX (770) 932-2490, www.nyloplastinlets.com

TITLE: 2 FT X 3 FT & 3 FT X 3 FT CURB INLET STRUCTURE SPECIFICATIONS

DWG NO. 7002-110-003 REV K

NYLOPLAST 2 FT X 3FT CURB INLET STRUCTURE: 30 _ _ AGR _ _ X

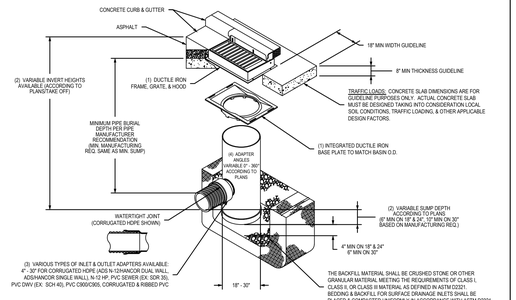

1 - 18" - 30" FRAMES, GRATES, HOODS, & BASE PLATES SHALL BE DUCTILE IRON PER ASTM A536 GRADE 70-50-05
2 - DRAIN BASIN TO BE CUSTOM MANUFACTURED ACCORDING TO PLAN DETAILS
3 - DRAINAGE CONNECTION STUB JOINT TIGHTNESS SHALL CONFORM TO ASTM D3212 FOR CORRUGATED HDPE (ADS N-12/HANCOR DUAL WALL), N-12 HP, & PVC SEWER (4" - 24").
4 - ADAPTERS CAN BE MOUNTED ON ANY ANGLE 0° TO 360°. TO DETERMINE MINIMUM ANGLE BETWEEN ADAPTERS SEE DRAWING NO. 7001-110-012.
5 - ALL STEEL COMPONENTS (DIAGONAL & HIGH FLOW) SHALL MEET H-20 LOAD RATING

THIS PRINT DISCLOSES SUBJECT MATTER IN WHICH NYLOPLAST HAS PROPRIETARY RIGHTS. THE RECEIPT OR POSSESSION OF THIS PRINT DOES NOT CONFER, TRANSFER, OR LICENSE THE USE OF THE DESIGN OR TECHNICAL INFORMATION SHOWN HEREIN. REPRODUCTION OF THIS PRINT OR ANY INFORMATION CONTAINED HEREIN, OR MANUFACTURE OF ANY ARTICLE HEREFROM, FOR THE DISCLOSURE TO OTHERS IS FORBIDDEN, EXCEPT BY SPECIFIC WRITTEN PERMISSION FROM NYLOPLAST. 630134 (04-04-22)

DRAWN BY: ESC | DATE: 03-22-16 | REVISED BY: MMH | DATE: 03-10-16 | DWG SIZE: A | SCALE: 1:40 | SHEET: 1 OF 1 | MATERIAL | PROJECT NO./NAME

Nyloplast — 3128 VERONA AVE, BUFORD, GA 30518, PHN (770) 932-2443, FAX (770) 932-2490, www.nyloplastinlets.com

TITLE: DRAIN BASIN WITH 2 FT X 3 FT CURB INLET QUICK SPEC INSTALLATION DETAIL

DWG NO. 7002-110-007 REV C

ROAD & HIGHWAY
32 _ _ AGS _ _ X
32 _ _ AGR _ _ X

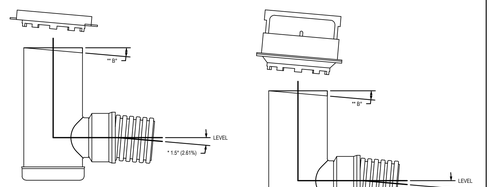

CURB INLET
30 _ _ AGS _ _ X
30 _ _ AGR _ _ X

STRUCTURE SIZE	8°	8%
12"	3.15	5.50
15"	3.15	5.50
18"	3.01	5.25
24"	3.15	5.50
30"	2.88	5.00

* MAXIMUM DEFLECTION FOR 4" - 30" ADS N-12/HANCOR DUAL WALL CORRUGATED HDPE PIPE IN ANY DIRECTION

** MAXIMUM FIELD GRADE TRIM ADJUSTMENT

THIS PRINT DISCLOSES SUBJECT MATTER IN WHICH NYLOPLAST HAS PROPRIETARY RIGHTS. THE RECEIPT OR POSSESSION OF THIS PRINT DOES NOT CONFER, TRANSFER, OR LICENSE THE USE OF THE DESIGN OR TECHNICAL INFORMATION SHOWN HEREIN. REPRODUCTION OF THIS PRINT OR ANY INFORMATION CONTAINED HEREIN, OR MANUFACTURE OF ANY ARTICLE HEREFROM, FOR THE DISCLOSURE TO OTHERS IS FORBIDDEN, EXCEPT BY SPECIFIC WRITTEN PERMISSION FROM NYLOPLAST. 630134 (04-04-22)

DRAWN BY: EBC | DATE: 02-03-09 | REVISED BY: CCA | DATE: 09-04-13 | DWG SIZE: A | SCALE: 1:16 | SHEET: 1 OF 1 | MATERIAL | PROJECT NO./NAME

Nyloplast — 3128 VERONA AVE, BUFORD, GA 30518, PHN (770) 932-2443, FAX (770) 932-2490, www.nyloplastinlets.com

TITLE: 12 IN - 30 IN ROAD & HIGHWAY & CURB INLET FIELD ADJUSTMENTS

DWG NO. 7001-110-346 REV C

3099CGRHF & 3099CGRFH

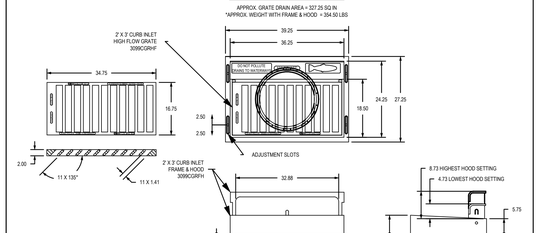

DIMENSIONS ARE FOR REFERENCE ONLY
ACTUAL DIMENSIONS MAY VARY
DIMENSIONS ARE IN INCHES
GRATE MEETS H-20 LOAD RATING
QUALITY: MATERIALS SHALL CONFORM TO ASTM A536 GRADE 70-50-05
PAINT: CASTINGS ARE FURNISHED WITH A BLACK PAINT
LOCKING DEVICE AVAILABLE UPON REQUEST SEE DRAWING NO. 7002-110-058
SLOPE OF GRATE SURFACE IS 5.2%
CURB INLET FRAME INSIDE VOLUME IS APPROX 2.73 CU FT
APPROX. DRAIN AREA OF GRATE & HOOD
LOWEST SETTING = 463.92 SQ IN
LOWEST + 1" SETTING = 486.75 SQ IN
LOWEST + 2" SETTING = 529.67 SQ IN
LOWEST + 3" SETTING = 562.34 SQ IN
LOWEST SETTING + HOOD = 1,095.42 SQ IN

THIS PRINT DISCLOSES SUBJECT MATTER IN WHICH NYLOPLAST HAS PROPRIETARY RIGHTS. THE RECEIPT OR POSSESSION OF THIS PRINT DOES NOT CONFER, TRANSFER, OR LICENSE THE USE OF THE DESIGN OR TECHNICAL INFORMATION SHOWN HEREIN. REPRODUCTION OF THIS PRINT OR ANY INFORMATION CONTAINED HEREIN, OR MANUFACTURE OF ANY ARTICLE HEREFROM, FOR THE DISCLOSURE TO OTHERS IS FORBIDDEN, EXCEPT BY SPECIFIC WRITTEN PERMISSION FROM NYLOPLAST. 630134 (04-04-22)

DRAWN BY: ESC | DATE: 04-10-08 | REVISED BY: CCA | DATE: 09-05-13 | DWG SIZE: A | SCALE: 1:16 | SHEET: 1 OF 1 | MATERIAL: DUCTILE IRON | PROJECT NO./NAME

Nyloplast — 3128 VERONA AVE, BUFORD, GA 30518, PHN (770) 932-2443, FAX (770) 932-2490, www.nyloplastinlets.com

TITLE: 2 FT X 3 FT CURB INLET HIGH FLOW GRATE ASSEMBLY

DWG NO. 7002-110-047 REV D

1 7.3 NYLOPLAST COMBINATION CURB GRATE INLET (CCG)
NOT TO SCALE

NOT IN CONTRACT

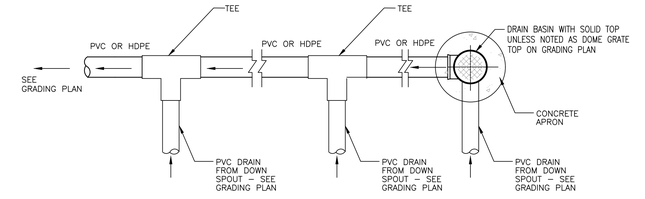

PLAN VIEW

"NYOPLAST" DRAIN BASINS ARE MADE BY ADVANCED DRAINAGE SYSTEMS, INC.

CONTRACTOR MAY SUBSTITUTE AN EQUIVALENT PRODUCT FOR ANY OF THE YARD DRAIN BASINS OR INLINE DRAINS.

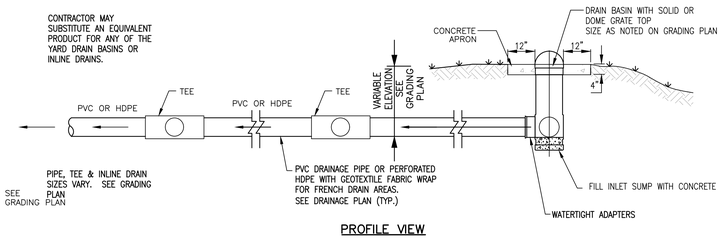

PROFILE VIEW



TYPICAL NYOPLAST 12" OR 15" DOME GRATE INLET TOP
NOT TO SCALE

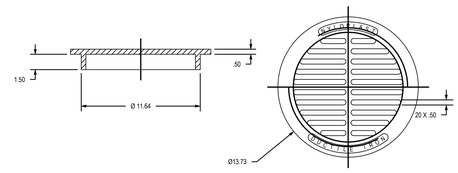

TYPICAL NYOPLAST 12" OR 15" DROP IN GRATE INLET
NOT TO SCALE

2 7.3 TYPICAL INSTALLATION OF DRAINAGE PIPE FOR FRENCH DRAIN & ADS TYPE DRAIN BASINS
NOT TO SCALE

NOT IN CONTRACT

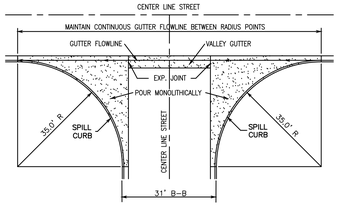

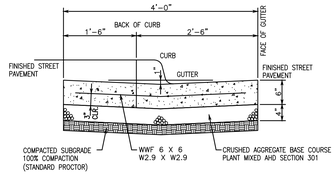

SECTION – VALLEY GUTTER

3 7.3 VALLEY GUTTER PLAN VIEW
NOT TO SCALE

NOT IN CONTRACT

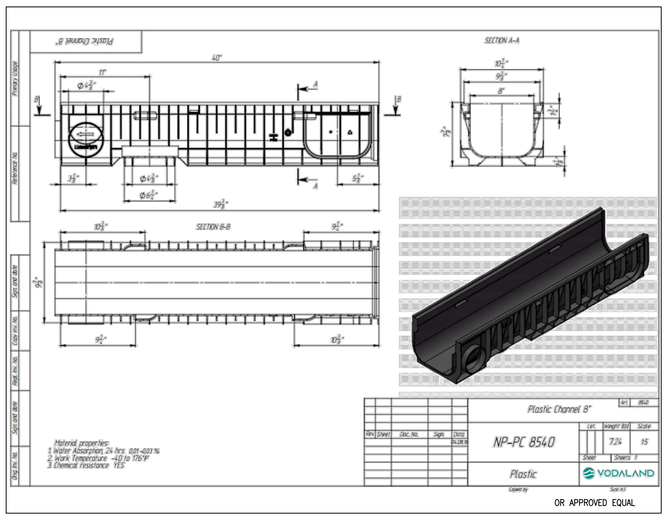

4 7.3 8" COMMERCIAL SIDEWALK TRENCH DRAIN
NOT TO SCALE

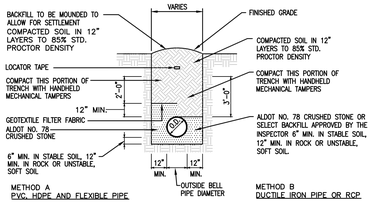

NOTE:
1. THE TRENCH SHALL BE BACKFILLED WITH SOIL MATERIAL WHICH IS CLEAN AND FREE FROM LARGE ROCK AND FOREIGN MATTER. THIRTY-SIX (36) INCHES OF COVER SHALL BE PROVIDED OVER THE PIPE BEFORE ANY HEAVY COMPACTION EQUIPMENT WILL BE ALLOWED.
2. COMPACTION TESTS WILL NOT BE REQUIRED AS LONG AS THE CONTRACTOR IS FOLLOWING THE PROPER PROCEDURES AND USING PROPER EQUIPMENT AND TECHNIQUES IN BACKFILLING OPERATIONS.

UNDERGROUND UTILITY PIPE BEDDING
DETAILS IN NON–TRAFFIC AREAS
NOT TO SCALE

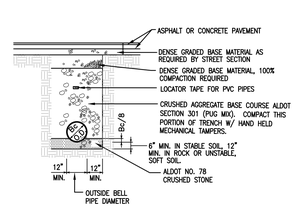

UNDERGROUND UTILITY PIPE BEDDING DETAILS
WITHIN PROPOSED TRAFFIC AREAS
NOT TO SCALE

5 7.3 UNDERGROUND UTILITY PIPE BEDDING
NOT TO SCALE

CLASSROOM ADDITION
FOR
UNION HILL SCHOOL
SOMERVILLE, ALABAMA
FOR THE
MORGAN COUNTY BOARD OF EDUCATION

JOHNSON & ASSOCIATES SURVEYING
1216 CHURCH STREET, DECATUR, ALABAMA 35601
PH 1-256-353-7332 FAX 1-256-353-7333

McKEE and ASSOCIATES
ARCHITECTS, INC.
631 SOUTH HULL STREET, MONTGOMERY, ALABAMA 36104 (334) 834-9933

ALABAMA PROFESSIONAL ENGINEER
REGISTERED NO. 16690
ENGINEER
NATHAN G. JOHNSON
10/13/2022

SHEET TITLE: CONSTRUCTION DETAILS

MCKEE JOB #: 22-134 / J&A 1949EN

DRAWN BY: RG

DATE: 10.13.2022

REVISED DATE:

REVISED DATE:

REVISED DATE:

SHEET NO.: C7.3

- T:\SubSite\1949EN, Union Hill Jr High Addition for McKee Architects\Civil 3D Design\Production Drawings\1949EN_C700_CONSTRUCTION DETAILS.DWG
- Thursday, October 13, 2022 5:17:39 PM

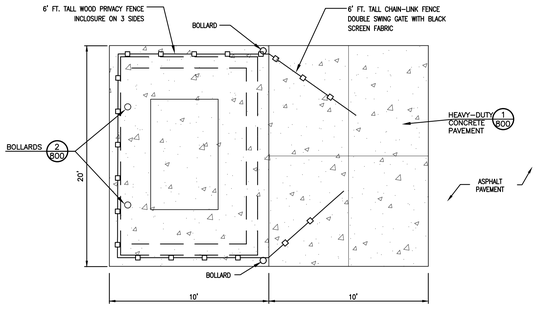

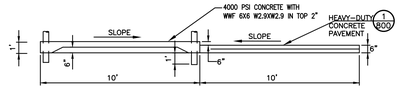

PAD CONSTRUCTION

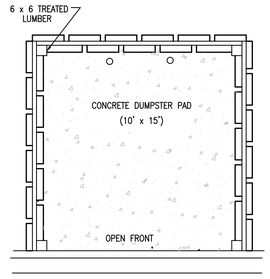

PLAN VIEW

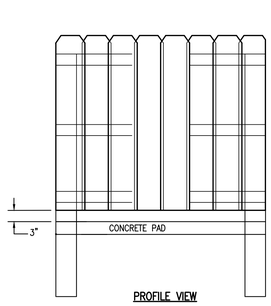

PROFILE VIEW

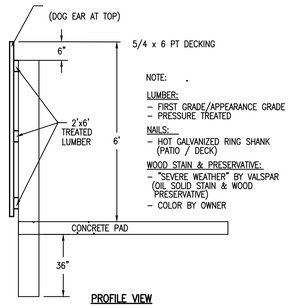

PROFILE VIEW

NOTE:

LUMBER:
- FIRST GRADE/APPEARANCE GRADE
- PRESSURE TREATED

NAILS:
- HOT GALVANIZED RING SHANK (PATIO / DECK)

WOOD STAIN & PRESERVATIVE:
- "SEVERE WEATHER" BY VALSPAR (OIL SOLID STAIN & WOOD PRESERVATIVE)
- COLOR BY OWNER

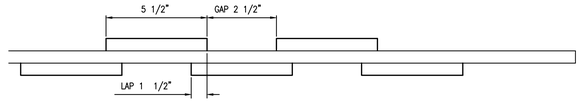

BOARD SPACING

1
7.4
DUMPSTER PAD
NOT TO SCALE

NOT IN CONTRACT

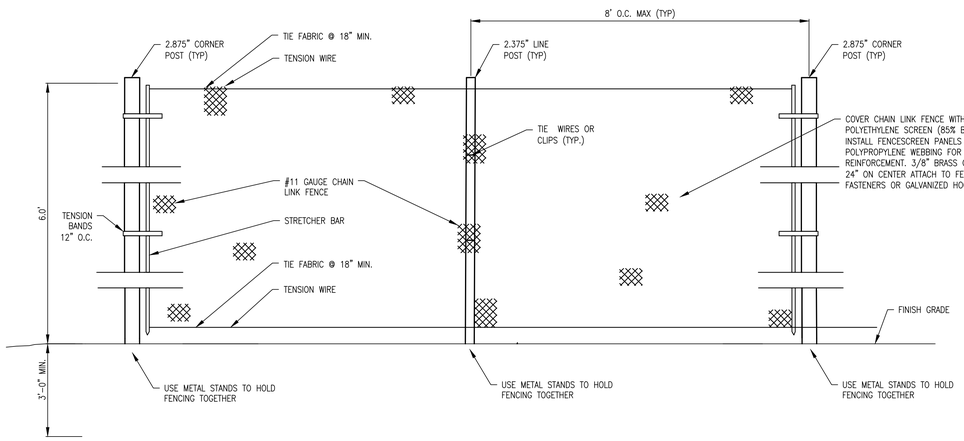

2
7.4
6-FOOT HIGH TEMPORARY CONSTRUCTION FENCE
NOT TO SCALE

NOTES:
1. GATES MUST REMAIN IN GOOD WORKING ORDER AND MUST BE CLOSED AND SECURED DURING NON-WORKING HOURS.
2. GATES SHALL BE CONSTRUCTED SO THAT THEY SWING IN TOWARDS THE CONSTRUCTION SITE.
3. GATES MUST BE CONSTRUCTED WITH THE SAME DESIGN CHARACTERISTICS AS THE TEMPORARY CONSTRUCTION FENCE.
4. CONTRACTOR MAY REUSE PRE-USED FENCE MATERIAL IF APPROVED BY ARCHITECT.
5. INSTALL PER MANUFACTURER RECOMMENDATIONS.
6. COVER CHAIN LINK FENCE WITH KNITTED POLYETHYLENE SCREEN (85% BLOCKAGE).
7. INSTALL FENCESCREEN PANELS WITH 2" POLYPROPYLENE WEBBING FOR EDGE REINFORCEMENT. 3/8" BRASS GROMMETS AT 24" ON CENTER ATTACH TO FENCE WITH FASTENERS OR GALVANIZED HOG RINGS.



METAL STAND

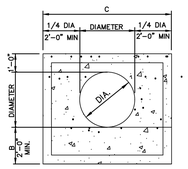

ELEVATION OF ROUND PIPE HEADWALL

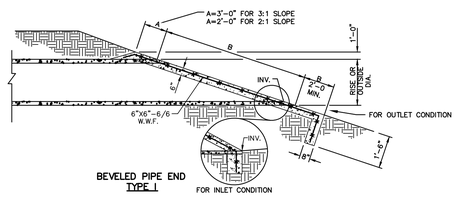

BEVELED PIPE END TYPE I

FOR INLET CONDITION

GENERAL NOTES:

1. THIS HEADWALL IS NOT DESIGNED TO OFFER ANY SUPPORT TO THE PIPE. THE FILL IS TO BE PLACED AND ALL SHORING REMOVED BEFORE THE SLOPE PAVING IS PLACED.
2. ALL SLOPE PAVING SHALL CONFORM TO THE CURRENT ALABAMA DEPARTMENT OF TRANSPORTATION STANDARD SPECIFICATIONS.
3. QUANTITIES SHOWN INCLUDE TWO SLOPE PAVED WALLS AND TWO TOE WALLS.
4. CONTRACTOR SHALL INSURE THROUGH MECHANICAL MEANS OR OTHER APPROVED DEVICES THAT CONNECTION BETWEEN BEVELED PIPE END AND CONCRETE WILL NOT BE DETACHED.
5. CONCRETE SHALL BE CLASS "A" WITH A MINIMUM 28 DAY STRENGTH OF 3000 P.S.I.
6. PROVIDE 6" x 6" - 6/6 GAGE WELDED WIRE FABRIC FOR PIPES LARGER THAN 36" OR EQUIVALENT.
7. RIPRAP SHALL BE UNIFORM SIZE THROUGHOUT, AND AT LEAST 6" THICK AT THE SMALLEST DIMENSION.

DIMENSIONS FOR ROUND PIPE

DIAMETER		OPEN AREA	2 TO 1 SLOPE			3 TO 1 SLOPE		
INCHES	FT. & IN.		B	C	D	B	C	D
8"	0'-8"	0.4	1'-6"	4'-8"	1'-0"	2'-2"	4'-8"	1'-0"
10"	0'-10"	0.5	1'-11"	4'-10"	1'-3"	2'-8"	4'-10"	1'-3"
12"	1'-0"	0.8	2'-5"	5'-0"	1'-6"	3'-2"	5'-0"	1'-6"
15"	1'-3"	1.2	2'-10"	5'-3"	1'-11"	4'-0"	5'-3"	1'-11"
18"	1'-6"	1.8	3'-3"	5'-6"	2'-3"	4'-9"	5'-6"	2'-3"
21"	1'-9"	2.4	3'-11"	5'-9"	2'-7 1/2"	5'-7"	5'-9"	2'-7 1/2"
24"	2'-0"	3.1	4'-6"	6'-0"	3'-0"	6'-4"	6'-0"	3'-0"
30"	2'-6"	4.9	5'-3"	6'-6"	3'-9"			
36"	3'-0"	7.1	6'-9"	7'-0"	4'-6"			
42"	3'-6"	9.6	7'-0"	7'-6"	5'-3"			
48"	4'-0"	12.6	9'-0"	8'-0"	6'-0"			
54"	4'-6"	15.9	10'-1"	8'-6"	6'-9"			
60"	5'-0"	19.6	11'-3"	9'-0"	7'-6"			

3
7.4
SLOPE PAVED HEADWALL
NOT TO SCALE

NOT IN CONTRACT

CLASSROOM ADDITION
FOR
UNION HILL SCHOOL
SOMERVILLE, ALABAMA
FOR THE
MORGAN COUNTY BOARD OF EDUCATION

JOHNSON & ASSOCIATES SURVEYING ENGINEERING
1218 CHURCH STREET
DECATUR, ALABAMA 35601
PH 1-256-353-7332
FAX 1-256-353-7333

McKEE and ASSOCIATES
ARCHITECTS, INC.
631 SOUTH HULL STREET, MONTGOMERY, ALABAMA 36104 (334) 834-9933

ALABAMA REGISTERED PROFESSIONAL ENGINEER
REGISTERED NO. 16690
NATHAN G. JOHNSON
10/13/2022

SHEET TITLE : CONSTRUCTION DETAILS

MCKEE JOB # : 22-134 / J&A 1949EN

DRAWN BY : RG

DATE: 10.13.2022

REVISED DATE:

REVISED DATE:

REVISED DATE:

SHEET NO. : C7.4

- T:\SubSite\1949EN_Union Hill Jr High Addition for McKee Architects\Civil 3D Design\Production Drawings\1949EN_C700_CONSTRUCTION DETAILS.DWG
- Thursday, October 13, 2022 5:17:53 PM

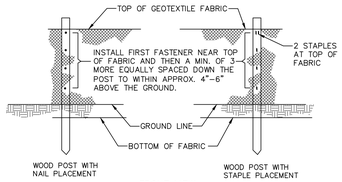

FRONT VIEW

FASTENERS FOR SILT FENCES

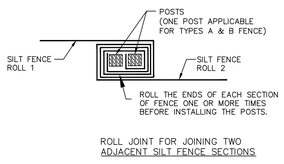

ROLL JOINT FOR JOINING TWO ADJACENT SILT FENCE SECTIONS

INSTALLATION

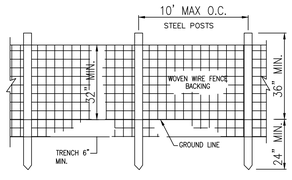

FRONT VIEW

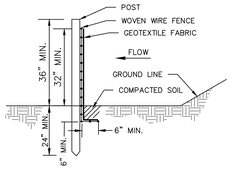

SIDE VIEW

TYPE "A" SILT FENCE

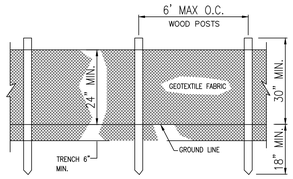

FRONT VIEW

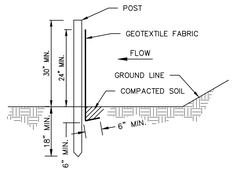

SIDE VIEW

TYPE "B" SILT FENCE

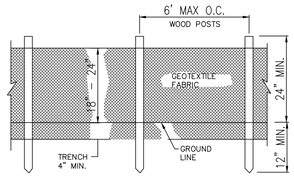

FRONT VIEW

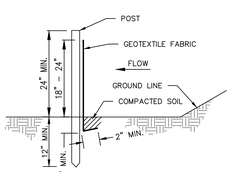

SIDE VIEW

TYPE "C" SILT FENCE

NOTES:
1. THE WOVEN WIRE FENCING SHALL BE FASTENED TO THE UPSTREAM SIDE OF POSTS BY STAPLES OR WIRE TIES.
2. GEOTEXTILE FABRIC SHALL BE SECURELY FASTENED TO THE WOVEN WIRE FENCING.
3. MACHINE TRENCHED GEOTEXTILE SHALL BE TRENCHED VERTICAL AT LEAST 8" DEEP.

1 / 7.5 SILT FENCE
NOT TO SCALE



SILT FENCE "J" HOOK DETAIL

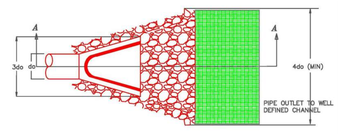

PLAN

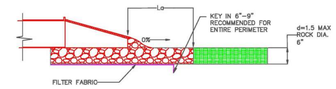

SECTION

PIPE DIAMETER INCHES	DISCHARGE ft3/s	APRON LENGTH-Lo ft	RIP RAP D50 DIAMETER MIN INCHES
12	5	10	4
	10	13	6
18	10	10	6
	20	16	8
	30	23	12
	40	26	16
24	30	16	8
	40	26	8
	50	26	12
	60		16

2 / 7.5 END TREATMENT
NOT TO SCALE

NOT IN CONTRACT

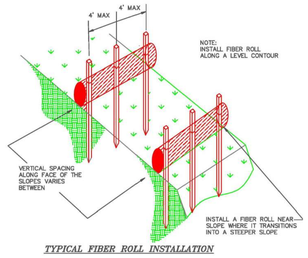

TYPICAL FIBER ROLL INSTALLATION

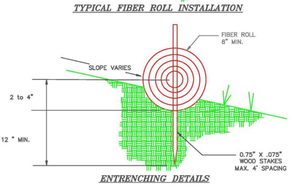

ENTRENCHING DETAILS

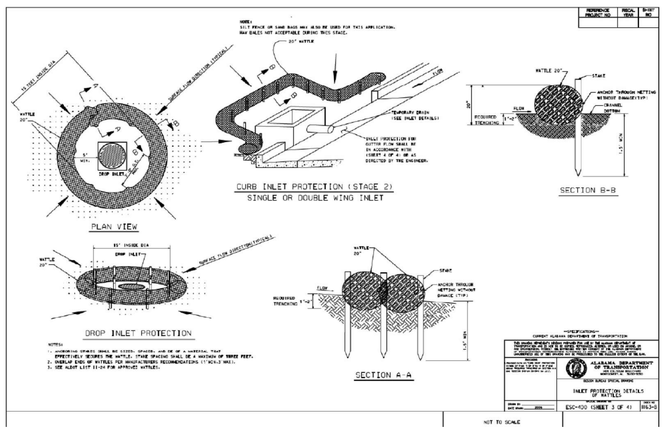

POSITION WATTLES SO THAT THE TOP OF WATTLE IS LEVEL WITH THE BOTTOM OF THE WATTLE ABOVE IT. TALLER WATTLE MAY BE USED TO MEET THIS REQUIREMENT.

SAND BAGS SHALL BE USED TO HOLD WATTLES IN PLACE IN PAVED AREAS

3 / 7.5 WATTLE DETAILS
NOT TO SCALE

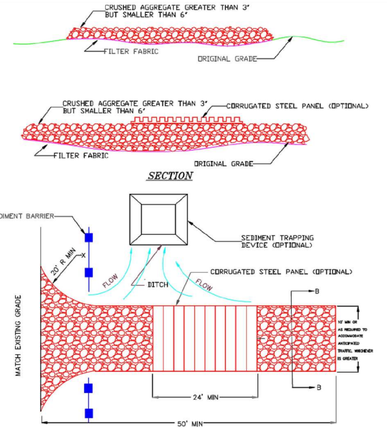

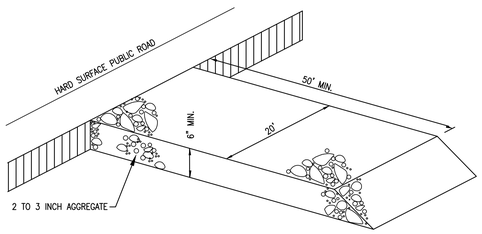

4 / 7.5 GRAVEL CONSTRUCTION EXIT
NOT TO SCALE

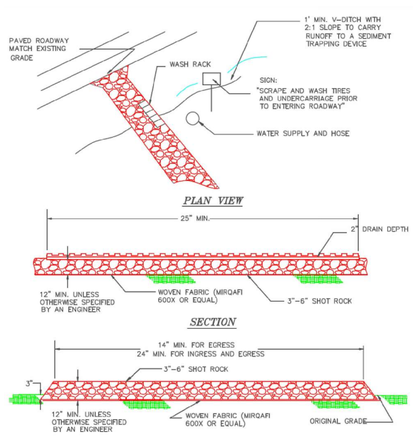

WASHDOWN STATION

6 / 7.5 CONCRETE WASHDOWN CONTAINMENT
NOT TO SCALE

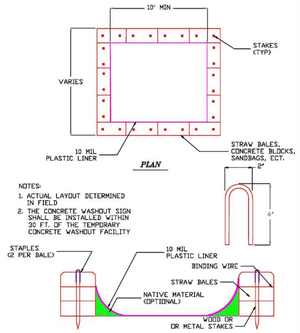

CONCRETE WASHDOWN CONTAINMENT DETAIL

NOTE:
ALL RIP-RAP SHALL BE UNIFORMLY GRADED FROM THE SMALLEST TO THE LARGEST STONE SIZES.

RIP-RAP SHALL MEET THE REQUIREMENTS OF THE LATEST EDITION OF THE ALABAMA DEPARTMENT OF TRANSPORTATION SPECIFICATIONS, SECTION 814.01 (A) CLASS 1 RIP-RAP. H=12" MIN.

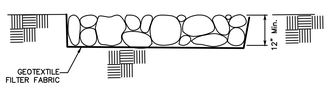

7 / 7.5 RIPRAP DETAIL
NOT TO SCALE

NOT IN CONTRACT

CLASSROOM ADDITION
FOR
UNION HILL SCHOOL
SOMERVILLE, ALABAMA
FOR THE
MORGAN COUNTY BOARD OF EDUCATION

JOHNSON & ASSOCIATES
ENGINEERING SURVEYING
1218 CHURCH STREET
DECATUR, ALABAMA 35601
PH 1-256-353-7331
FAX 1-256-353-7332

McKEE and ASSOCIATES
ARCHITECTS, INC.
631 SOUTH HULL STREET , MONTGOMERY , ALABAMA 36104 (334) 834-9933

ALABAMA PROFESSIONAL ENGINEER
REGISTERED NO. 16690
ENGINEER NATHAN G. JOHNSON
10/13/2022

SHEET TITLE : CONSTRUCTION DETAILS

MCKEE JOB # : 22-134 / J&A 1949EN

DRAWN BY : RG

DATE: 10.13.2022

REVISED DATE:

REVISED DATE:

REVISED DATE:

SHEET NO. : C7.5

- T:\SubSite\1949EN_Union Hill Jr High Addition for McKee Architects\Civil 3D Design\Production Drawings\1949EN_C700_CONSTRUCTION DETAILS.DWG
- Thursday, October 13, 2022 5:18:07 PM

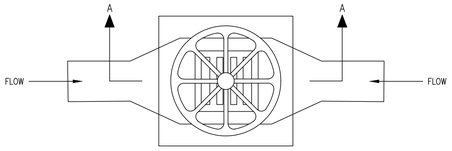

PLAN

NOTES:
1. FRAMES WITH EITHER SQUARE OR CIRCULAR BASES MAY BE USED. SELECTED FRAME BASE SHOULD PROVIDE BEST SEAL AROUND INLET AS DIRECTED BY THE ENGINEER.
2. FILL POCKETS AROUND BASE OF FILTER COVER WITH #57 STONE OR SOIL. STONE IS REQUIRED WHEN ANCHORING THE MANUFACTURED INLET PROTECTION DEVICE OVER PAVED DITCH OR FLUME.
3. USE ONLY DURING STAGE 3 OR 4 INLET CONSTRUCTION.
4. FOR MEDIAN INLET PROTECTION, THE ELEVATION OF THE COARSE SCREEN TOP SHOULD BE A MINIMUM OF 6" OR BELOW THE ELEVATION OF THE OUTSIDE EDGE OF THE INSIDE SHOULDER.
5. INLET PROTECTION DEVICES MAY BE USED IN LIEU OF WATTLES/SILT FENCE AT DISCRETION OF CONTRACTOR AS APPROVED BY THE ENGINEER.

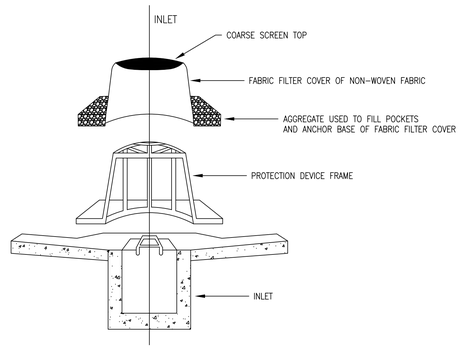

SECTION "A-A"

SILT SAVER OR EQUAL
1 / 7.6 INLET PROTECTION
NOT TO SCALE

CONTRACTOR MAY SUBSTITUTE AN EQUIVALENT PRODUCT FOR ANY OF THE INLET PROTECTION DEVICES SHOWN.

Specifications

The patented **Silt-Saver Frame** is constructed of partially recycled, high molecular weight, high-density polyethylene copolymer (HDPE). This material has super stress crack resistance combined with high impact strength and rigidity.

Frames are currently available in 2 models:
R-100A - Round Base to fit the 60"O. D. precast risers as used in most residential and light commercial applications and
S-200A - Square Base to fit the 60" O.D. brick or precast designs as used in most D.O.T. Highway applications.

Silt-Saver Frame and Filter Assembly will also accommodate drainage structures smaller than these listed with no special design required.

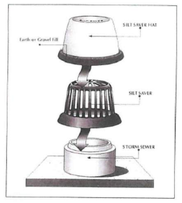

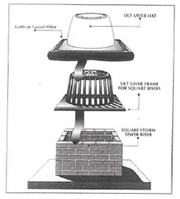

Silt-Saver, Inc. warrants all products against material defects and workmanship at time products are received. However due to the nature of construction jobsites, the durability and long term use of these products is not warranted.

All statements, information and data given herein are believed to be accurate and reliable but are presented without guaranty, warranty or responsibility of any kind, expressed or implied. The user should not assume that all safety measures are indicated, or that other measures of safety may not be required.

The patented **Silt-Saver Filter** designed to custom fit each frame and is constructed of non-woven polyester, needle punched and heat-set to provide durability. This material was chosen for its ability to provide **consistent** and **continuous** filtration under everyday job site conditions. The woven high visibility green filter top not only provides the **visible safety** but also provides a **higher flow** for the unexpected rain events.

Weight	D-3776	3.0 oz y^2
Tensile strength	D-4632	80lbs
Elongation	D-4632	50%
Mullen burst	D-3786	150
Puncture strength	D-4833	50
Trapezoid tear	D-4533	30
AOS-US std sieve	D-4751	70
Permittivity, -1 *	D-4491	2.0
Flow *	D-4491	102 gal/min/ft2
U.V. Resistance, %	D-4355 (500 hrs)	70

* Due to the variations in soil conditions, (soil types, soil stability, etc.) Silt-Saver, Inc. does not specify long-term effectiveness, (resistance to clogging). If this is a concern, one may want to conduct a gradient ratio test that will compare a specific soils hydraulic gradient to the hydraulic through the filter.

For Product Information Contact Your Local Distributor or Silt-Saver, Inc.
(770) 388-7818 -or- Toll Free 1 (888) 382-SILT (7458)
Web: www.siltsaver.com Email: sales@siltsaver.com

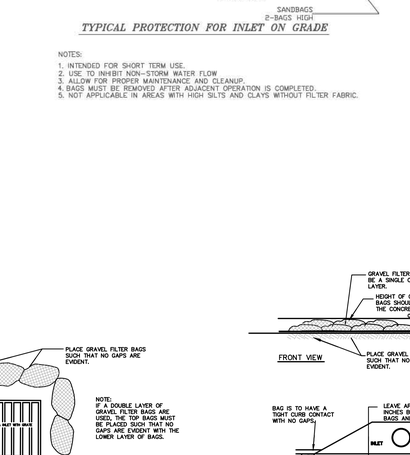

TYPICAL PROTECTION FOR INLET ON SUMP

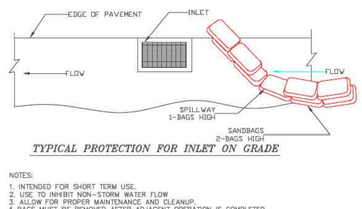

TYPICAL PROTECTION FOR INLET ON GRADE

NOTES:
1. INTENDED FOR SHORT TERM USE.
2. USE TO INHIBIT NON-STORM WATER FLOW
3. ALLOW FOR PROPER MAINTENANCE AND CLEANUP.
4. BAGS MUST BE REMOVED AFTER ADJACENT OPERATION IS COMPLETED.
5. NOT APPLICABLE IN AREAS WITH HIGH SILTS AND CLAYS WITHOUT FILTER FABRIC.

RIGID INLET PROTECTION DEVICE GENERAL SPECIFICATION SPECIFICATION SECTION 11111

A. GENERAL

1. DESCRIPTION

A. This section of the specification describes the sediment retaining device and the associated components. The equipment shall be installed as shown on the plans, as recommended by the supplier, and in compliance with all OSHA, local, state, and federal codes and regulations.

B. The number of Rigid Inlet Protection Assemblies shall be one (1) per inlet structure or as indicated on contract drawing(s). Each assembly shall include a separate Main Housing, and Fitted Filter Assembly.

C. All Inlet Protection Devices must be submitted for pre-approval prior to usage.

2. QUALITY ASSURANCE

A. Main Housing and Fitted Filter Media shall, as applicable, meet the requirements of the following industry standards:

1. American Society for Testing and Materials (ASTM) D4976-00b; Standard Specification for Polyethylene Plastic Molding and Extrusion Material.
2. ISO 868 Plastics-Determination of Indention Hardness by Means of a Durometer (Shore Hardness).
3. American Society for Testing and Materials (ASTM) D1117-99; Standard Guide for Evaluating Nonwoven Fabrics.
4. American Society for Testing and Materials (ASTM) D6193-97; Standard Practice for Stitches and Seams.

B. Qualified Manufacturers shall have a minimum 3 years experience at manufacturing rigid inlet protection assemblies for use as sediment control equipment and be experienced in installation of equivalent applications. Manufacturer shall be able to provide a list of at least 20 references of installations as requested by Engineer or Owner's Representative.

C. Qualified Manufacturers shall maintain sufficient inventory.

B. PRODUCTS

1. ACCEPTABLE MANUFACTURERS

A. The Rigid Inlet Protection Assembly shall be manufactured by Silt-Saver, Inc. and shall be Model #'s (SS-100A / SS-200A) or pre-approved equivalent. Silt-Saver, Inc. is located at 1401 Business Center Drive, Conyers, Georgia 30094, Toll Free (888) 382-SILT (7458). A list of Acceptable Local Area Suppliers can be obtained by contacting Silt-Saver, Inc.

B. When a Manufacturer and/or Supplier of an alternate inlet protection device takes exception or requests a waiver of certain aspects of this specification, a test demonstration shall be performed to the satisfaction of the Engineer and/or Local, State or Federal Regulating Authority. The device Manufacturer and/or Supplier shall cover the costs of equipment, materials, and labor required to perform the demonstration. The test shall include, but **NOT** be limited to the following:

1. The ability of the inlet protection device to provide acceptable environmental protection in a wide variety of conditions and materials to be encountered.
2. Fineness and uniformity of resultant filter effluent.
3. Control system performance and repeatability.
4. Hydrostatic load test for Main Housing shall be minimum: 150-psi for 30-minutes without degradation.

2. IDENTIFICATION

A. Each unit shall include complete identification, including but NOT limited to the following: Manufacturer name and location, telephone, web address, model and/or serial number.

C. RIGID INLET PROTECTION ASSEMBLY

1. GENERAL

A. Each Rigid Inlet Protection Assembly shall consist of the following components: a) Main Housing and b) Fitted Filter Assembly.

B. The Main Housing shall be lightweight and be capable of continuous operation in all climate conditions. The Main Housing shall be manufactured with high molecular weight, high-density polyethylene copolymer. Main Housings that are not reusable and recyclable are **NOT** acceptable.

C. The Rigid Inlet Protection Assembly shall require no ancillary tools to assemble and shall be self-sealing adjacent to the inlet structure. To reduce risk of failure, multi-component Main Housings shall not be acceptable.

D. The Fitted Filter Assembly shall provide complete coverage of Main Housing and provide 2-stage filtering capacity.

E. Rigid Inlet Protection Assembly shall meet or exceed manual material handling and lifting weight limitations as outlined in the NIOSH Lifting Equation.

2. MAIN HOUSING

A. The Main Housing shall be a solid formed high molecular weight, high-density polyethylene copolymer. The Main Housing shall be designed to meet or exceed the Standard Specifications for Polyethylene Plastic Molding and Extrusion Materials specification section (ASTM) D4976-00B.

B. The Main Housing material shall have a minimum tensile impact rating or 170 ft. lbs/sq. in., with a minimum tensile strength yield of 3600 psi. The Main Housing structure shall completely span and enclose the inlet structure.

C. The inside profile of the Main Housing shall be cylindrical to follow the radial arc of the domed top of cover. The top of the Main Housing shall have an open area to facilitate high flow conditions were large volumes of water must pass through at a rapid rate.

D. The Main Housing peripheral frame shall consist of multiple slatted openings, providing a minimum of 6.4 sq. ft. open area, to facilitate filtration of the storm water during normal operational conditions.

E. The Main Housing shall be self-sealing around the inlet structure, have a minimum height of 26" above the inlet structure, and have an enclosed top.

3. FITTED FILTER ASSEMBLY

A. The Fitted Filter Assembly shall be constructed of 100% continuous polyester needle-punched non-woven engineering fabric and follow the guidelines in the American Society for Testing and Materials (ASTM) D1117-99; Standard Guide for Evaluating Nonwoven Fabrics. The Fitted Filter Assembly shall be fabricated to provide a direct fit adjacent to the associated Main Housing.

B. Fitted Filter Assembly - Geotextile Fabric

1. The filter fabric shall have a weight on no less than 3.0 ounces per square yard.
2. The filter fabric shall have a tensile strength of no less than 80 psi with an elongation at break of no less than fifty percent (50%).
3. The filter fabric shall have puncture strength of no less than 42 psi.
4. The filter fabric shall have a minimum U.V. rating of no less than 70% at 500 hrs.

C. The filter fabric shall be capable of reducing effluent turbidity and concentration by no less than 80% under typical sediment migration conditions.

D. Fitted Filter Assembly shall be constructed with integral anti-buoyancy pockets capable of holding no less than 3.0 CF of stabilization material.

E. The Fitted Filter Assembly shall be constructed to form a two-stage design, stage one shall be adjacent to the perimeter of the Main Housing and convey normal flows at a minimum clean water flow rate of 100 gpm per sq. ft.; stage two shall provide coarse screening across the top of the Main Housing and convey high flow rates, with a minimum apparent opening of ½" per sq. in. (NO.12 std sieve opening).

F. All seaming of components associated with the Filter Fabric Assembly shall use a continuous over edge sew through seam using a 1680 den thread and meet American Society for Testing and Materials (ASTM) D6193-97; Standard Practice for Stitches and Seams.

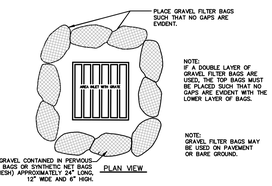

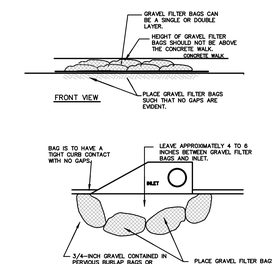

2 / 7.6 GRAVEL BAG FILTER
NOT TO SCALE

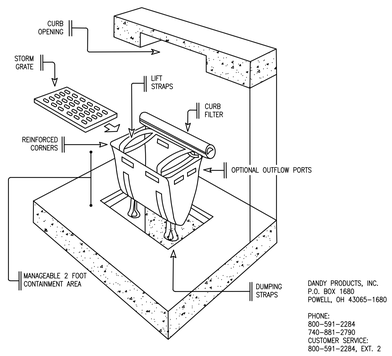

3 / 7.6 DANDY CURB SACK
NOT TO SCALE

CLASSROOM ADDITION
FOR
UNION HILL SCHOOL
SOMERVILLE, ALABAMA
FOR THE
MORGAN COUNTY BOARD OF EDUCATION

JOHNSON & ASSOCIATES SURVEYING ENGINEERING
1218 CHURCH STREET
DECATUR, ALABAMA 35601
PH 1-256-353-7331
FAX 1-256-353-7332

McKEE and ASSOCIATES
ARCHITECTS, INC.
631 SOUTH HULL STREET, MONTGOMERY, ALABAMA 36104 (334) 834-9933

ALABAMA
REGISTERED PROFESSIONAL ENGINEER
REGISTERED NO. 16690
MATTHEW G. JOHNSON
10/13/2022

SHEET TITLE : CONSTRUCTION DETAILS

MCKEE JOB # : 22-134 / J&A 1949EN

DRAWN BY : RG

DATE: 10.13.2022

REVISED DATE:

REVISED DATE:

REVISED DATE:

SHEET NO. : C7.6

- T:\SubSite\1949EN, Union Hill Jr High Addition for McKee Architects\Civil 3D Design\Production Drawings\1949EN_C700_CONSTRUCTION DETAILS.DWG
- Thursday, October 13, 2022 5:18:24 PM

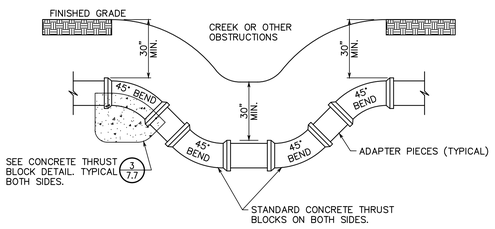

1 7.7 DITCH AND OBSTRUCTION CROSSING DETAIL
NOT TO SCALE

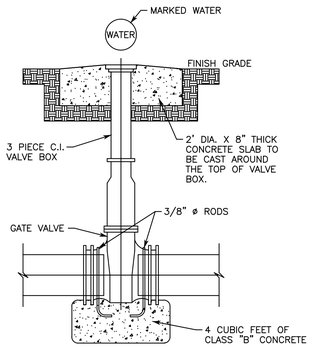

2 7.7 VALVE BOX DETAIL
NOT TO SCALE

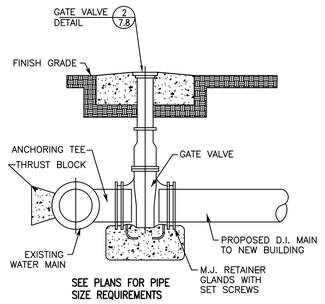

3 7.7 WATER CONNECTION DETAIL
NOT TO SCALE

PIPE SIZE	11-1/4° BEND			
	H1	H2	D	V
4"	12"	8"	12"	12"
6"	16"	10"	18"	12"
8"	8"	11"	18"	16"

PIPE SIZE	22-1/2° BEND			
	H1	H2	D	V
4"	12"	8"	12"	12"
6"	18"	10"	18"	16"
8"	27"	11"	18"	20"

PIPE SIZE	45° BEND			
	H1	H2	D	V
4"	24"	8"	12"	12"
6"	30"	10"	18"	20"
8"	36"	11"	18"	30"

PIPE SIZE	90° BEND			
	H1	H2	D	V
4"	24"	12"	12"	24"
6"	36"	16"	18"	30"
8"	48"	18"	18"	36"

PIPE SIZE	TEES & PLUGS			
	H1	H2	D	V
4"	24"	12"	12"	16"
6"	30"	16"	18"	24"
8"	40"	18"	18"	30"

DIMENSIONS BASED ON SOIL BEARING CAPACITY OF 1000 PSF AND WATER PRESSURE OF 150 PSI (100 PSI PLUS 50% FOR WATER HAMMER).

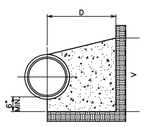

SECTION

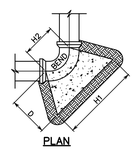

PLAN

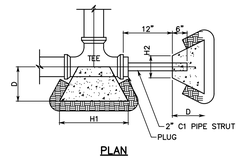

PLAN

4 7.7 CONCRETE THRUST BLOCK DETAIL
NOT TO SCALE

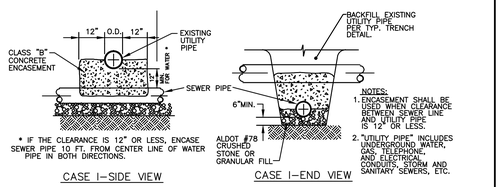

NOTE:
RELOCATION OF A UTILITY OTHER THAN CITY OF HUNTSVILLE SEWERS WILL BE THE RESPONSIBILITY OF THAT UTILITY, HOWEVER, CONTRACTOR SHALL COORDINATE WITH OTHER UTILITIES.

5 7.7 UTILITY CROSSING DETAILS
NOT TO SCALE

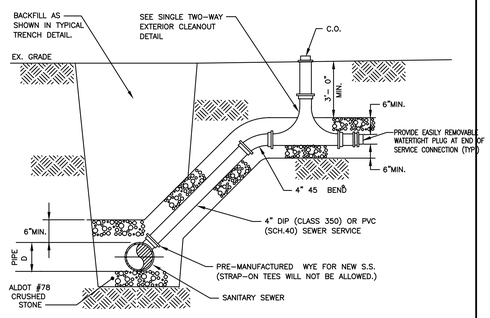

6 7.7 SERVICE CONNECTION FOR DEEP SEWER (MORE THAN 6')
NOT TO SCALE

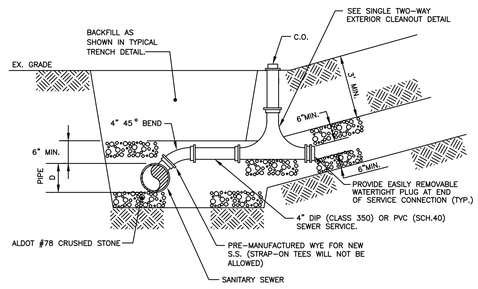

7 7.7 SERVICE CONNECTION FOR SHALLOW SEWER (6' OR LESS)
NOT TO SCALE

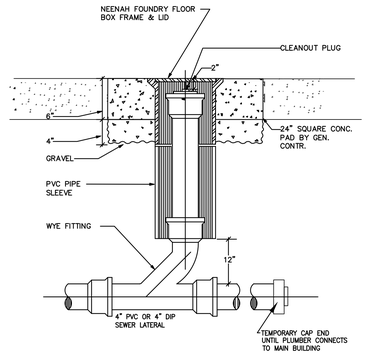

8 7.7 OUTDOOR CLEANOUT DETAIL
NOT TO SCALE

CLASSROOM ADDITION
FOR
UNION HILL SCHOOL
SOMERVILLE, ALABAMA
FOR THE
MORGAN COUNTY BOARD OF EDUCATION

JOHNSON & ASSOCIATES SURVEYING
1218 CHURCH STREET
DECATUR, ALABAMA 35601
PH 1-256-353-7332
FAX 1-256-353-7333

McKEE and ASSOCIATES
ARCHITECTS, INC.
631 SOUTH HULL STREET . MONTGOMERY . ALABAMA 36104 (334) 834-9933

ALABAMA
REGISTERED PROFESSIONAL ENGINEER
NATHAN C. CARSON
REGISTERED NO. 16690
10/13/2022

SHEET TITLE : CONSTRUCTION DETAILS

MCKEE JOB # : 22-134 / J&A 1949EN

DRAWN BY : RG

DATE: 10.13.2022

REVISED DATE:

REVISED DATE:

REVISED DATE:

SHEET NO. : C7.7

- T:\SubSite\1949EN_Union Hill Jr High Addition for McKee Architects\Civil 3D Design\Production Drawings\1949EN_C700_CONSTRUCTION DETAILS.DWG
- Thursday, October 13, 2022 5:18:40 PM

LINTEL SCHEDULE

MARK OR LOCATION	MAX. SPAN	TYPE	SIZE	REINFORCEMENT	REMARKS
BRICK	4'–0"	STEEL ANGLE	L6x4x5/16	-----	LONG LEG HORIZ. BEAR 8" EACH END
BRICK OR PRECAST	6'–8"	STEEL ANGLE	L6x6x3/8	-----	BEAR 8" EACH END
BRICK	9'–4"	BENT ℙ	3/8x8"x6 1/2" BENT ℙ	-----	LONG LEG VERTICAL – BEAR 12"MIN. EACH END. SEE NOTE 5
8"CMU U.N.O.	3'–4"	U–BLOCK	8"x8"	#5 TOP & BOTTOM	8" HIGH U–BLOCK
8"CMU U.N.O.	6'–8"	U–BLOCK	8"x16"	(2)#5 TOP & BOTTOM	16" HIGH U–BLOCK
8"CMU U.N.O.	7'–8"	U–BLOCK	8"x24"	(2)#5 TOP & BOTTOM	24" HIGH U–BLOCK
8"CMU U.N.O.	9'–4"	U–BLOCK	8"x32"	(2)#5 TOP & BOTTOM	32" HIGH U–BLOCK
LOAD BRNG. 8"CMU BELOW 2ND FL.	3'–4"	U–BLOCK	8"x24"	(2)#5 TOP & BOTTOM	24" HIGH U–BLOCK
LOAD BRNG. 8"CMU BELOW 2ND FL.	7'–4"	U–BLOCK	8"x32"	(2)#5 TOP & BOTTOM	32" HIGH U–BLOCK
12"CMU U.N.O.	4'–0"	U–BLOCK	12"x8"	(2)#5 TOP & BOTTOM	8" HIGH U–BLOCK
12"CMU U.N.O.	6'–4"	U–BLOCK	12"x16"	(2)#5 TOP & BOTTOM	16" HIGH U–BLOCK
12"CMU @ SHELTER	3'–4"	U–BLOCK	12"x24"	(2)#5 TOP & BOTTOM	24" HIGH U–BLOCK
LOAD BRNG. 8"CMU @ SHELTER	3'–4"	U–BLOCK	8"x24"	(2)#5 TOP & BOTTOM	24" HIGH U–BLOCK
LOAD BRNG. 8"CMU @ SHELTER	6'–4"	U–BLOCK	8"x32"	(2)#5 TOP & BOTTOM	32" HIGH U–BLOCK
12"CMU @ SHELTER	8'–4"	U–BLOCK	12"x32"	(2)#7 TOP & BOTTOM	32" HIGH U–BLOCK

NOTES:

1. UNLESS NOTED OTHERWISE, BEAR 8" HIGH U–BLOCKS 8" EA. END AND 16", 24, & 32" HIGH U–BLOCKS 16" EACH END.
2. FILL CELLS WITH CONCRETE FULL HEIGHT AT U–BLOCK. BEARING FOR ENTIRE LENGTH OF BEARING & REINF. EA. CELL W/ BAR SAME SIZE AS WALL REINFORCING. VERTICAL REINF. SHALL BE CONTINUOUS THRU LINTEL AT BEARING.
3. SEE JAMB REINFORCING DETAILS ON THIS SHEET FOR ALL OPENINGS @ TORNADO SHELTER. (DOORS, WINDOWS, LOUVERS, & DUCT PENETRATIONS).
4. BEAR ALL LINTELS 16" MIN. @ TORNADO SHELTER.
5. SEE SECTION 7/S2.3 FOR ADD'L DETAILS @ BENT ℙ.

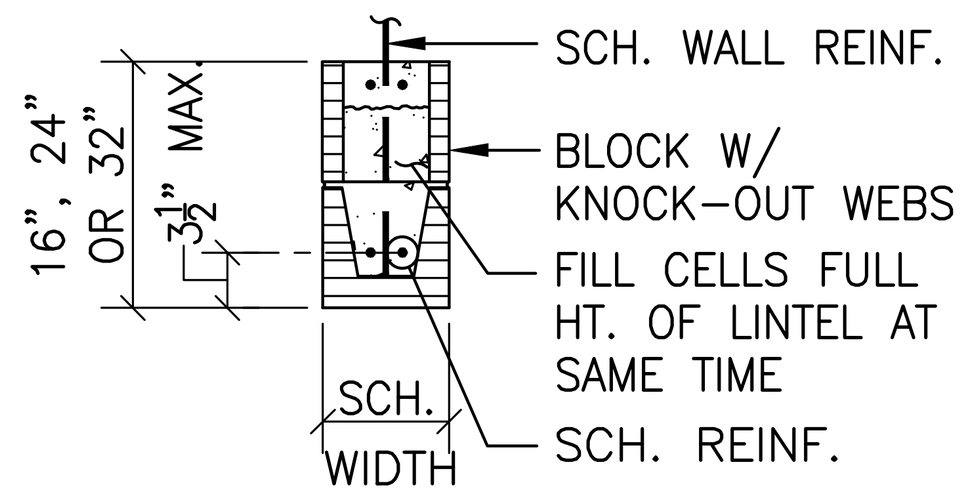

16", 24", & 32" HIGH U–BLOCK

BEARING PLATE SCHEDULE

MARK	BASE ℙ SIZE	ℙ TYPE	ANCHOR BOLT NO. & SIZE
BP–1	3/4"x7"x16"	A	(2)3/4"øx16" HEADED
BP–2	1"x7"x16"	B	(2)3/4"øx16" HEADED
BP–3	1 1/4"x7"x16"	B	(2)3/4"øx16" HEADED
BP–4	1"x9 1/2"x16"	B	(2)3/4"øx16" HEADED
BP–5	1 1/4"x11"x16"	B	(2)3/4"øx16" HEADED

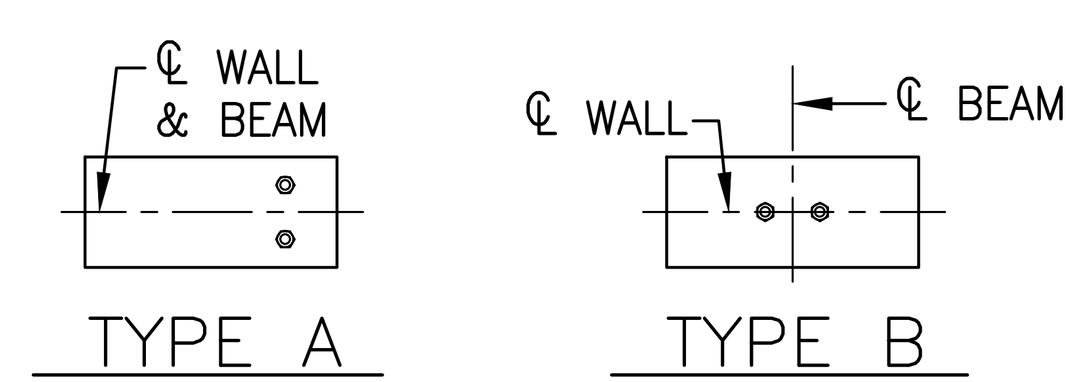

BASE PLATE TYPES

NOTE:
ALL ANCHOR BOLTS SHALL BE ASTM F1554 GRADE 55KSI STEEL, HEADED ANCHOR BOLTS

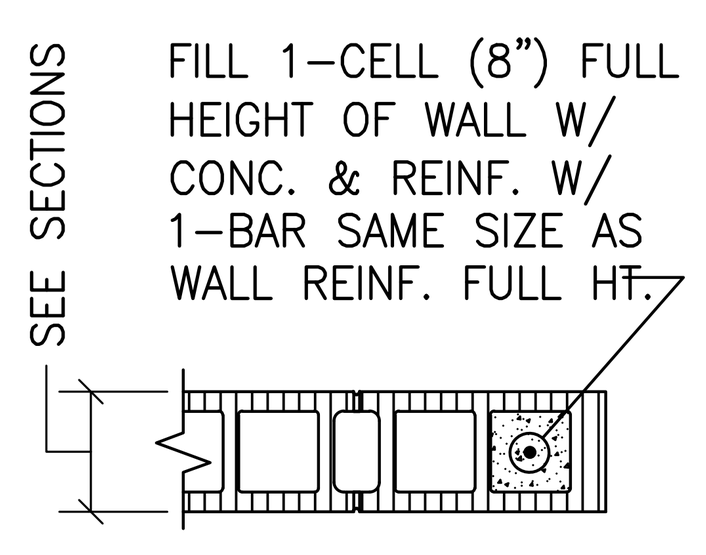

JAMB AT LINTELS BEARING 8"

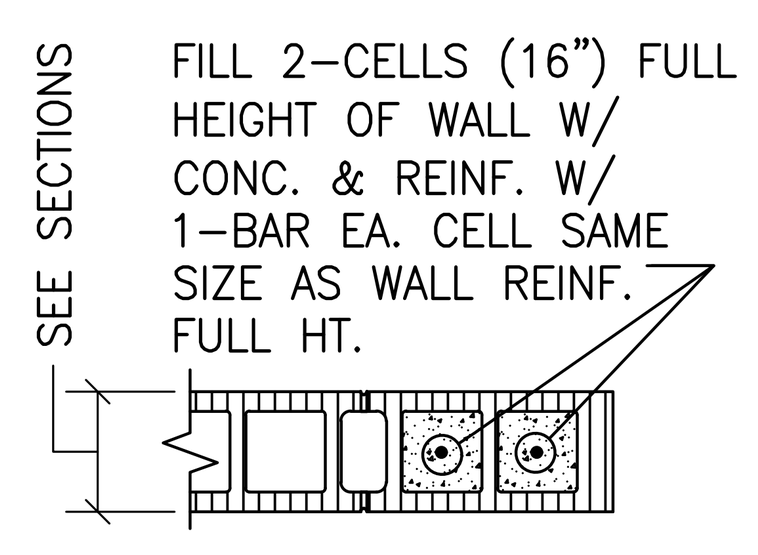

JAMB AT LINTELS BEARING 16"

NOTE:
ALL JAMB REINF. SHALL BE CONT. THRU LINTEL. MAINTAIN 3" VERT. BAR SPACING WHERE LINTEL HORIZ. REINF. PASSES BETWEEN VERT. BARS. MAINTAIN 1" CLEARANCE BETWEEN BOND BEAM HORIZ. BARS.

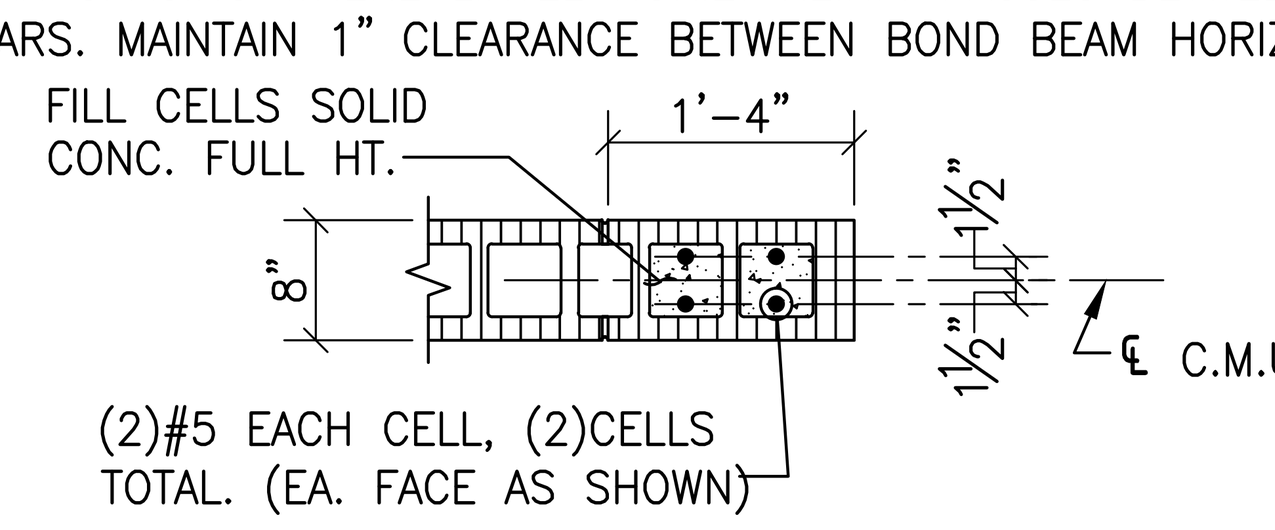

TYPICAL JAMB REINFORCING DETAILS
(UNLESS NOTED OTHERWISE ON DRAWINGS)

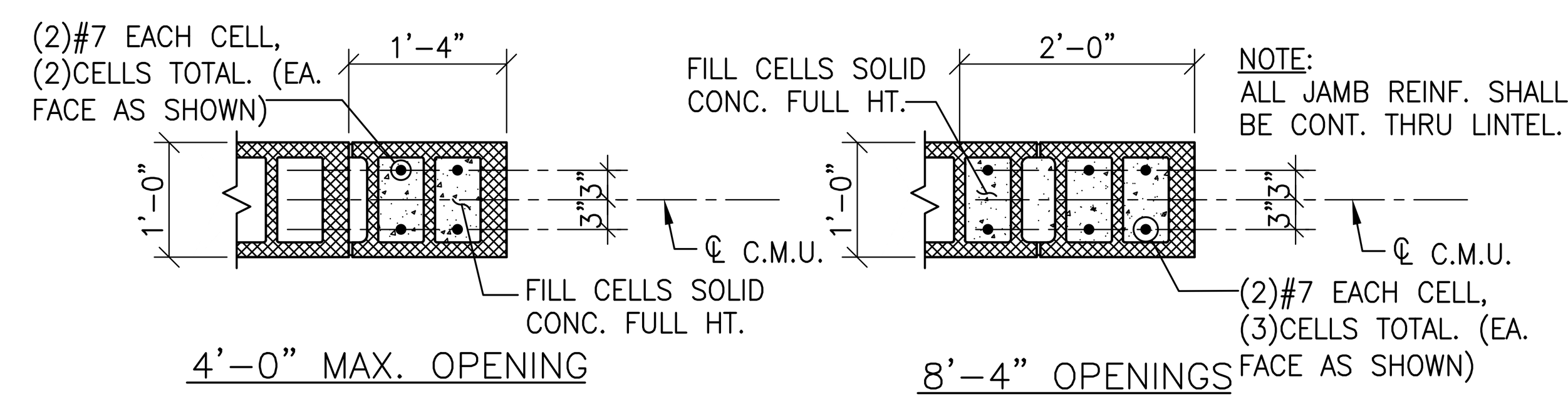

TYPICAL TORNADO SHELTER PERIMETER WALL JAMB REINFORCING DETAILS

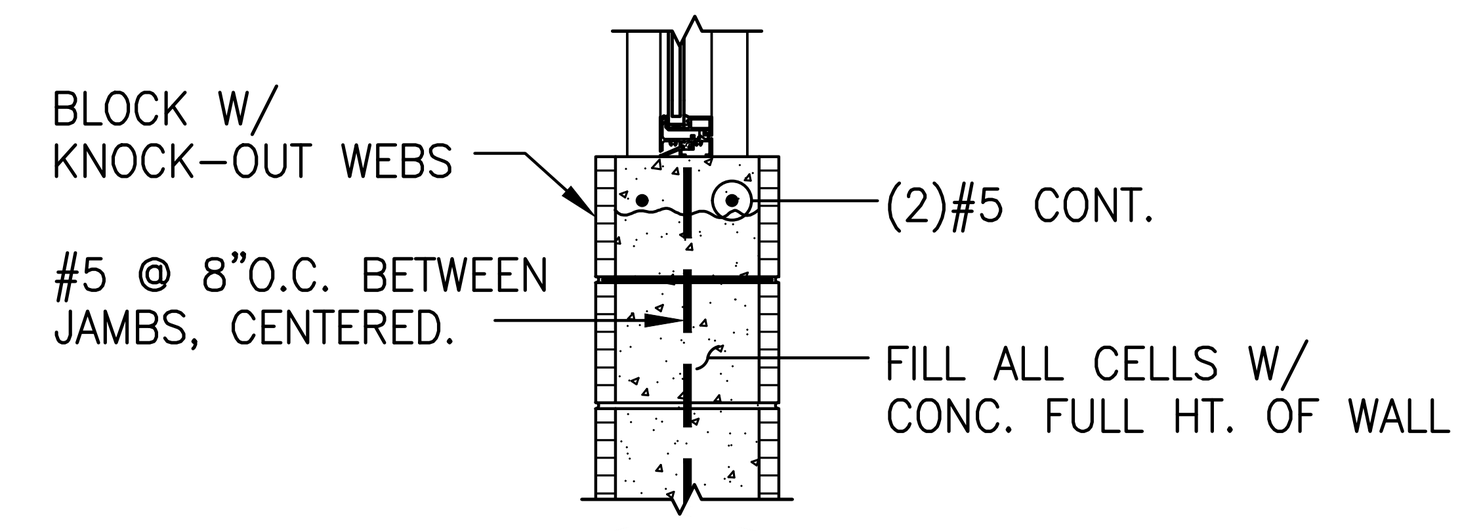

TYPICAL WINDOW / LOUVER SILL @ TORNADO SHELTER PERIMETER

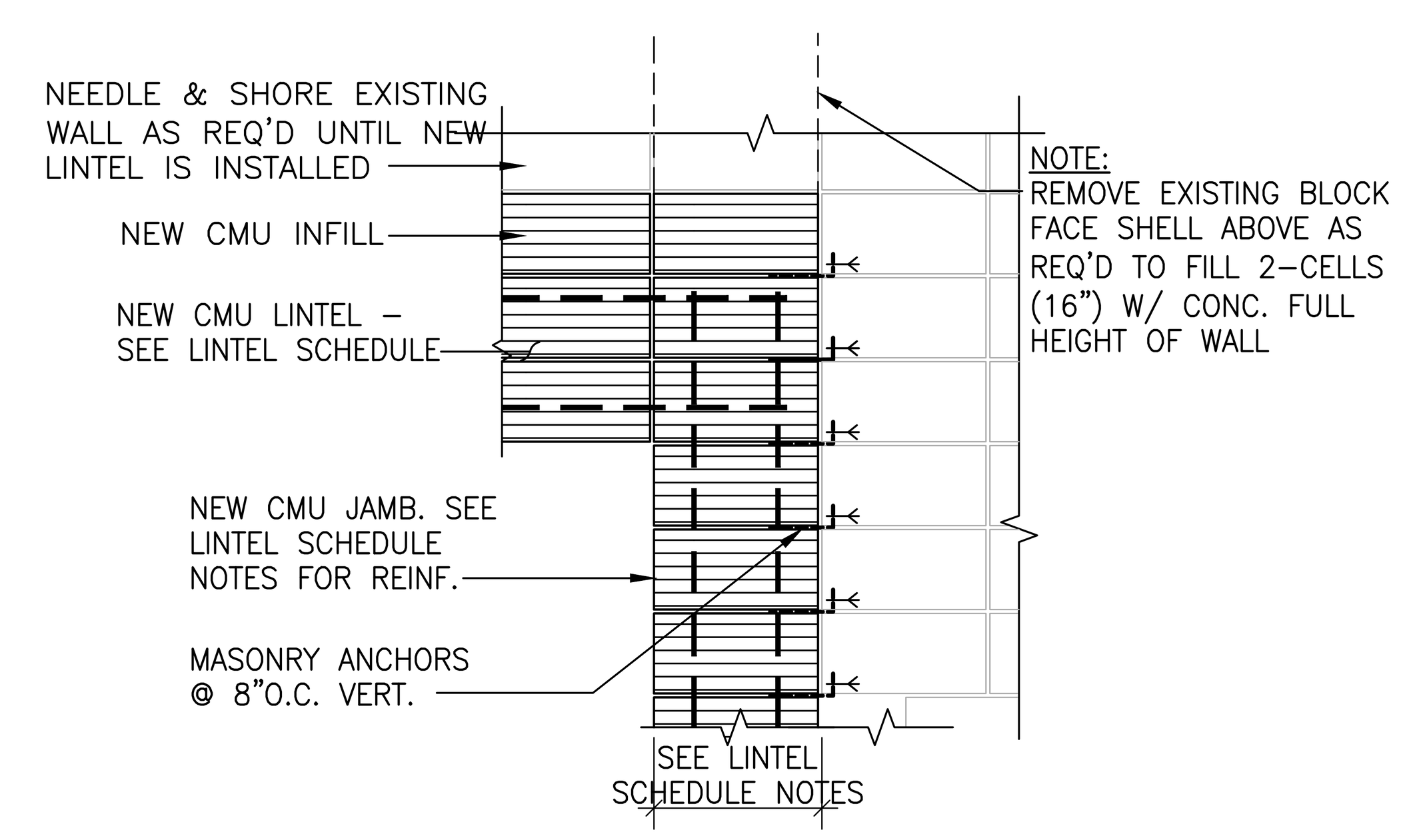

NEW CMU LINTEL IN EXISTING CMU WALL DETAIL

GENERAL NOTES

FOUNDATION:
1. THE BEARING STRATA OF ALL FOOTINGS AND GRADE BEAMS SHALL BE INSPECTED AND APPROVED BY THE SOILS TESTING LABORATORY PRIOR TO PLACING THE REINFORCING STEEL AND CONCRETE.
2. ALL FOOTINGS SHALL BEAR ON AN UNDISTURBED SOIL STRATA OR COMPACTED FILL CAPABLE OF SUSTAINING THE LOADS.
3. FOOTINGS WERE DESIGNED FOR AN ASSUMED ALLOWABLE SOIL BEARING OF P = 2000 PSF. ALLOWABLE SOIL BEARING SHALL BE VERIFIED BY TESTING AGENCY PRIOR TO FOOTINGS BEING POURED.
4. ELEVATIONS SHOWN ON PLAN ARE TOP OF FOOTINGS AND ARE MINIMUM DEPTH. DIFFERENT OR UNUSUAL CONDITIONS SHALL BE REPORTED TO THE ARCHITECT AND/OR ENGINEER.
5. ALL FOOTING REINFORCEMENT SHALL BE HELD SECURELY FROM THE GROUND. CONCRETE BLOCK AND BROKEN TILE SHALL NOT BE USED. CONCRETE OR CLAY BRICK MAY BE USED.
6. DOWEL ALL FOOTINGS AND WALLS WHERE THEY ABUT WITH SAME STEEL AS VERTICAL.
7. PROVIDE PREFORMED EXPANSION JOINT WHERE SHOWN.
8. IN FOOTINGS PROVIDE CORNER BARS AT ALL EXTERIOR BUILDING CORNERS.
9. DO NOT BACK FILL BEHIND FOUNDATION WALLS UNTIL TOP AND BOTTOM SLABS HAVE BEEN POURED AND ATTAINED THEIR DESIGN STRENGTHS.
10. BACK FILL BOTH SIDES OF FOUNDATION WALLS AT SAME TIME TO PREVENT OVERTURNING.
11. BACK FILL BEHIND ALL RETAINING WALLS SHALL BE AN APPROVED GRANULAR MATERIAL.

CONCRETE:
1. ALL CONCRETE SHALL HAVE A COMPRESSIVE STRENGTH AT 28 DAYS OF F'c = 3000 PSI AND A MAXIMUM WATER–CEMENT RATIO OF 0.53. ALL CONCRETE FOR EXTERIOR APPLICATIONS SHALL CONTAIN ENTRAINED AIR. SEE SPECS FOR ADDITIONAL INFORMATION.
2. REINFORCING STEEL SHALL CONFORM TO ASTM A615 GRADE 60.
3. WELDED WIRE FABRIC SHALL CONFORM TO ASTM A185 OR ASTM A1064.
4. UNLESS NOTED OTHERWISE PROTECTIVE COVERING OF REINFORCEMENT SHALL BE AS FOLLOWS (SEE DETAILS) : FOOTINGS AND GRADE BEAMS 3" CLEAR BOTTOM AND SIDES, 1 1/2" CLEAR TOP. CONCRETE SLABS 3/4" CLEAR. WALLS 1 1/2" CLEAR SIDES. BEAMS 1 1/2" CLEAR TO STIRRUPS. FORMED CONCRETE COLUMNS 1 1/2" CLEAR TO TIES.
5. LAP ALL CONCRETE WALL VERTICAL REINFORCING AND CONCRETE BEAM HORIZONTAL REINFORCING WITH CLASS B LAP SPLICES. LAP ALL OTHER CONTINUOUS BARS WITH CLASS A SPLICES UNLESS NOTED OTHERWISE.
6. PLACING PLANS AND DETAILS SHALL BE IN ACCORDANCE WITH THE LATEST "A.C.I. DETAILING MANUAL".
7. STEEL FABRICATOR SHALL SUBMIT SHOP DRAWINGS FOR THE ARCHITECT AND/OR ENGINEER'S REVIEW.
8. DO NOT RUN CONDUITS, RACEWAYS, OR PIPES IN CONCRETE SLABS, BEAMS, OR COLUMNS WITHOUT SPECIFIC APPROVAL FROM BLACKBURN DANIELS O'BARR.

MASONRY:
1. PROVIDE MASONRY HORIZONTAL JOINT REINFORCEMENT 16" O.C. VERTICAL IN ALL CONCRETE BLOCK WALLS. REINFORCEMENT SHALL BE FOR TOTAL WIDTH OF CAVITY WALLS.
2. WHERE CONCRETE OR STEEL BEAMS BEAR ON CONCRETE BLOCK WALLS, BLOCK CELLS SHALL BE FILLED WITH CONCRETE 1'–4" WIDE TO FOUNDATION AND REINFORCED WITH A #5 EACH CELL UNLESS NOTED OR DETAILED OTHERWISE.
3. CONCRETE OR GROUT FOR BLOCK FILL SHALL HAVE 3/8 INCH MAXIMUM SIZE COARSE AGGREGATE AND SUFFICIENT WATER SO THE CONCRETE WILL FLOW INTO THE BLOCK CELLS WITHOUT LEAVING VOIDS. HEIGHT OF LIFT WHEN FILLING CELLS SHALL NOT EXCEED 4'–0".
4. CONCRETE OR GROUT FILL FOR C.M.U. SHALL HAVE A 28 DAY COMPRESSIVE STRENGTH OF F'c = 3000 PSI. ON 16" AND DEEPER U–BLOCKS, FILL CELLS FULL HEIGHT OF LINTEL AT SAME TIME.
5. ANCHOR ALL MASONRY WALLS TO STEEL COLUMNS WITH STRAP ANCHORS AT 16" O.C. VERTICALLY UNLESS SHOWN OTHERWISE.
6. UNLESS INDICATED OTHERWISE PROVIDE KEYED RUBBER MASONRY CONTROL JOINTS AT A MAXIMUM SPACING OF 25'–4". JOINT SHALL BE DISCONTINUOUS AT BOND BEAM. COORDINATE EXACT LOCATIONS WITH ARCHITECT.
7. PROVIDE REINFORCING BAR SUPPORTS TO CENTER VERTICAL REINFORCING IN MASONRY WALLS.
8. PROVIDE 48 DIAMETER LAP SPLICE IN VERTICAL MASONRY REINFORCING.
9. PROVIDE CORNER BARS IN U–BLOCK BOND BEAMS AT CORNERS, TYPICAL.
10. ALL CMU SHALL BE PLACED IN A RUNNING BOND PATTERN UNLESS NOTED OTHERWISE ON ARCHITECTURAL DRAWINGS.
11. VERTICAL REINFORCING SHALL BE CONTINUOUS THROUGH BOND BEAMS AND LINTELS (CUT OUT OR NOTCH BOTTOM OF U–BLOCKS AS REQUIRED –– DO NOT SUBSTITUTE BLOCK WITH KNOCK–OUT WEBS WHERE STANDARD U–BLOCK IS INDICATED). FOR BOND BEAMS AT TOP OF WALL, EXTEND VERTICAL REINFORCING TO 1" CLEAR TOP OF BOND BEAM.

STRUCTURAL STEEL:
1. ALL STRUCTURAL STEEL W AND WT SHAPES SHALL CONFORM TO ASTM A992 (GRADE 50). OTHER SHAPES SHALL CONFORM TO ASTM, A36, LATEST EDITION (EXCEPT STEEL JOISTS AND TUBE SECTIONS).
2. STRUCTURAL STEEL TUBE SECTIONS SHALL CONFORM TO ASTM A500, GRADE B, Fy = 46.0 KSI.
3. HEADED STUDS SHALL BE TYPE B SHEAR CONNECTORS (Fu = 65 KSI).
4. STEEL FABRICATOR SHALL SUBMIT SHOP DRAWINGS FOR THE ARCHITECT AND/OR ENGINEER'S REVIEW.
5. THE CONTRACTOR SHALL VERIFY ALL SHOP DRAWINGS DIMENSIONS WITH STRUCTURAL AND ARCHITECTURAL PLANS AND DETAILS.
6. BOLTED CONNECTIONS SHALL BE MADE WITH HIGH STRENGTH BOLTS CONFORMING TO ASTM A325. USE 3/4 INCH DIAMETER MINIMUM.
7. CONNECTIONS NOT SHOWN ON DRAWINGS SHALL BE DESIGNED BY THE FABRICATOR. WHERE POSSIBLE USE DOUBLE ANGLE CONNECTIONS. USE MAXIMUM NUMBER OF BOLTS FOR DEPTH OF BEAM WITH SINGLE ROW OF BOLTS. WHERE DOUBLE ANGLE CONNECTIONS ARE NOT POSSIBLE, FABRICATOR SHALL DESIGN CONNECTION FOR CAPACITY EQUIVALENT TO DBL–ANGLE CONNECTION WITH MAX NO. BOLTS UNLESS DETAILED OTHERWISE.
8. FOR DBL–ANGLE CONNECTIONS, MIN ANGLE THICKNESS SHALL BE 5/16" FOR 3/4 INCH DIAMETER BOLTS AND 3/8" FOR 7/8 INCH DIAMETER BOLTS AND LARGER.
9. UNLESS SHOWN OTHERWISE PROVIDE 1/2 X 7 1/2 X 7 1/2 BEARING PLATES ON 1 INCH GROUT WITH 2–3/4" DIAMETER ANCHOR BOLTS UNDER ALL STEEL BEAMS THAT BEAR ON MASONRY WALLS.

COLD–FORMED STEEL TRUSSES:
1. PROVIDE PREFABRICATED, PRE–ENGINEERED, COLD–FORMED STEEL TRUSSES WHERE INDICATED ON PLAN.
2. ALL TRUSSES SHALL BE DESIGNED AND MANUFACTURED TO MEET THE FOLLOWING WORKING LOADS AND CODES.
MINIMUM LOADS:
ROOF LIVE LOAD...............20 PSF.
ROOF DEAD LOAD...............15 PSF.
CEILING LOAD.................10 PSF.
3. MANUFACTURER SHALL SUBMIT SHOP DRAWINGS AND DESIGN CALCULATIONS FOR EACH TYPE TRUSS. DESIGNS SHALL BE SIGNED BY A REGISTERED PROFESSIONAL ENGINEER, REGISTERED IN THE STATE OF ALABAMA.
4. PROVIDE CAMBER IN ALL TRUSSES.
5. ALL TRUSSES SHALL BE SHOP–FABRICATED. FIELD–FABRICATED TRUSSES ARE NOT ACCEPTABLE. THE TOP AND BOTTOM CHORDS SHALL BE FABRICATED FROM SECTIONS THAT ARE SYMMETRICAL ABOUT THE Y–Y AXIS. "C" SECTIONS ARE NOT ACCEPTABLE.
6. ANCHOR ALL TRUSSES TO SUPPORTS WITH GALVANIZED ANCHORS PER MANUFACTURER'S RECOMMENDATIONS UNLESS SHOWN OTHERWISE ON THE STRUCTURAL CONTRACT DRAWINGS. TRUSS MANUFACTURER SHALL INDICATE ON SHOP DRAWINGS THE REQUIRED ANCHORAGE TO RESIST NET UPLIFT.
7. TRUSS TOP AND BOTTOM CHORDS SHALL BE A MINIMUM OF 18 GAGE. TRUSS WEB MEMBERS SHALL BE A MINIMUM OF 20 GAGE.
8. PROVIDE VERTICAL WEB MEMBERS TO ACCOMODATE TRUSS VERTICAL X–BRACING (SEE PLAN FOR LOCATIONS). X–BRACING SHOWN ON CONTRACT DRAWINGS IS IN ADDITION TO ALL BRACING REQUIRED BY TRUSS MFR (SHOWN ON TRUSS SHOP DWGS).
9. BLOCKING BETWEEN TRUSS TOP CHORDS @ HIPS, VALLEYS, & RIDGES MAY BE OMITTED ONLY IF CONT BENT–PLATE (ABOVE BLKG) HAS BEEN DESIGNED AND DETAILED BY COLD–FORMED SUPPLIER TO SERVE AS STRUCTURAL SUPPORT FOR DECK (SPANNING BETWEEN SUPPORTING TRUSSES ASSUMING 35 PSF MIN ROOF LOAD ON BENT–PL).

CODES:
ALL PARTS SHALL BE FURNISHED AND ERECTED ACCORDING TO THE APPLICABLE CODES AND SPECIFICATIONS OF THE FOLLOWING:
AMERICAN CONCRETE INSTITUTE (ACI)
AMERICAN INSTITUTE OF STEEL CONSTRUCTION (AISC)
AMERICAN WELDING SOCIETY (AWS)
OSHA STEEL ERECTION STANDARD (OSHA)
NATIONAL LUMBER MANUFACTURER'S ASSOCIATION (NLMA)
AMERICAN INSTITUTE OF TIMBER CONSTRUCTION (AITC)
INTERNATIONAL BUILDING CODE (IBC 2015) (ICC)
ICC 500–2014 (STORM SHELTER DESIGN) (ICC)

DESIGN LIVE LOADS:
ROOF.......20 PSF.
RISK CATEGORY (PER IBC 2015/ASCE 7–10)..........III
WIND.......INTERNATIONAL BUILDING CODE (PER ASCE 7–10)
ULTIMATE DESIGN WIND SPEED (Vult).........120 MPH
NOMINAL DESIGN WIND SPEED (Vasd)..........93 MPH
WIND EXPOSURE.............................C
INTERNAL PRESSURE COEFFICIENTS............+/–0.18
SEISMIC....INTERNATIONAL BUILDING CODE (PER ASCE 7–10)
SEISMIC IMPORTANCE FACTOR.................Ie=1.25
MAPPED SPECTRAL ACCELERATION (SHORT–TERM).Ss=0.249g
MAPPED SPECTRAL ACCELERATION (1–SECOND)...S1=0.116g
SITE CLASS................................D
SHORT–PERIOD SPECTRAL RESPONSE ACCEL......Sds=0.266g
1–SECOND SPECTRAL RESPONSE ACCEL..........Sd1=0.180g
SEISMIC DESIGN CATEGORY...................C
SEISMIC FORCE–RESISTING SYSTEM............CMU SHEAR WALLS
DESIGN BASE SHEAR (ULTIMATE)..............292k
SEISMIC RESPONSE COEFFICIENT..............Cs=0.146
RESPONSE MODIFICATION FACTOR..............R=3.5
ANALYSIS PROCEDURE........................ASCE 7 (SECT 12.8)

SNOW.......INTERNATIONAL BUILDING CODE
GROUND SNOW LOAD..........................Pg=10 PSF

COMPONENTS AND CLADDING ULTIMATE WIND PRESSURES (NON–SHELTER AREAS):
NOTE: MULTIPLY ALL VALUES SHOWN BELOW BY 0.6 TO GET ALLOWABLE DESIGN PRESSURES.
SEE FIGURE 30.5–1 OF ASCE 7–10 FOR INDICATED ZONES.

ROOF:TRIBUTARY AREA A = 10 SF
ZONE 1: –34.3 PSF/21.6 PSF
ZONE 2: –59.7 PSF/21.6 PSF
ZONE 3: –88.2 PSF/21.6 PSF
ROOF:TRIBUTARY AREA A = 100 SF
ZONE 1: –31.1 PSF/15.2 PSF
ZONE 2: –43.8 PSF/15.2 PSF
ZONE 3: –69.3 PSF/15.2 PSF
WALL:TRIBUTARY AREA A = 10 SF
ZONE 4: –40.6 PSF/37.5 PSF
ZONE 5: –50.2 PSF/37.5 PSF
WALL:TRIBUTARY AREA A = 50 SF
ZONE 4: –36.7 PSF/33.6 PSF
ZONE 5: –42.4 PSF/33.6 PSF
WALL:TRIBUTARY AREA A = 100 SF
ZONE 4: –35.0 PSF/31.8 PSF
ZONE 5: –38.9 PSF/31.8 PSF
CORNER ZONE = 8.4 FT

SPECIAL INSPECTIONS:
ALL SPECIAL INSPECTIONS REQUIRED BY CHAPTER 17 OF IBC SHALL BE PERFORMED BY A DESIGNATED TESTING AGENCY OR AGENCIES RESPONSIBLE FOR SPECIAL INSPECTIONS.

SEISMIC REQUIREMENTS FOR SPECIAL INSPECTIONS:
1. THE FOLLOWING STRUCTURAL COMPONENTS ARE DESIGNATED AS SEISMIC SYSTEMS AND/OR PART OF THE SEISMIC–FORCE–RESISTING SYSTEM OF THE BUILDING AND ARE SUBJECT TO THE REQUIREMENTS OF SECTIONS 1705.12 AND 1705.13 OF IBC 2015 AND PROJECT SPECIFICATIONS:
ROOF DIAPHRAGM SYSTEM AND ATTACHMENT (INCUDING TRUSS X–BRACING)
TRUSS ANCHORAGE TO CMU WALLS
LOAD–BEARING CMU (SHEAR) WALLS
SHEAR WALL ANCHORAGE TO FOUNDATION
THESE SPECIFIC COMPONENTS ARE IN ADDTION TO ALL GENERAL COMPONENTS LISTED IN SECTIONS 1705.12 AND 1705.13 OF IBC 2015 AND ARE SUBJECT TO ALL SPECIAL INSPECTIONS AND TESTING AS REQUIRED BY CHAPTER 17 OF IBC 2015, PROJECT SPECIFICATIONS, AND SCHEDULE OF SPECIAL INSPECTIONS. SPECIAL INSPECTION REPORTS SHALL BE SUBMITTED AS PER THE STATEMENT OF SPECIAL INSPECTIONS.
2. OTHER ARCHITECTURAL, MECHANICAL, OR ELECTRICAL COMPONENTS AND THEIR ANCHORAGES MAY ALSO BE DESIGNATED AS SEISMIC SYSTEMS. SEE OTHER DISCIPLINE'S DRAWINGS AND SPECIFICATIONS.

TORNADO SHELTER DESIGN LIVE LOADS (PER ICC 500–2014):
ROOF LIVE LOAD..........................100 PSF
ULTIMATE DESIGN WIND SPEED.............250 MPH
WIND EXPOSURE..........................C
WIND DIRECTIONALITY FACTOR.............1.0
TOPOGRAPHIC FACTOR.....................1.0
INTERNAL PRESSURE COEFFICIENTS..........+/– 0.55
MISSILE IMPACT CRITERIA:
15# 2x4 @ 100 MPH FOR VERTICAL SURFACES
15# 2x4 @ 67 MPH FOR HORIZONTAL SURFACES

THE WIND DESIGN OF THE SHELTER CONFORMS TO THE PROVISIONS OF THE ICC/NSSA STANDARD FOR THE DESIGN AND CONSTRUCTION OF STORM SHELTERS (ICC 500–2014)).

MISSILE IMPACT TESTED SYSTEM USED (OR EXCEEDED):
HORIZONTAL:
FULLY GROUTED 8" C.M.U. W/ #5 REBAR SPACED @ 48"O.C. AT EVERY OPENING AND CORNER...................... (FEMA P–361, SECTION B8.2.3.3)
VERTICAL:
4" THICK CONCRETE SLAB W/ #4 @ 12"O.C. REBAR EACH WAY.........(FEMA P–361, SECTION B8.2.3.4)

QUALITY ASSURANCE FOR TORNADO SHELTER:
1. THE FOLLOWING STRUCTURAL COMPONENTS ARE DESIGNATED AS WIND SYSTEMS AND/OR PART OF THE MAIN WINDFORCE–RESISTING SYSTEM OF THE TORNADO SHELTER AND ARE SUBJECT TO THE REQUIREMENTS OF SECTION 1705.11 OF IBC 2015 AND PROJECT SPECIFICATIONS:
ROOF SLAB INCLUDING REINFORCEMENT AND ANCHORAGE
LOAD–BEARING CMU (SHEAR) WALLS
BEAM CONNECTIONS TO CMU WALLS
CMU WALL ANCHORAGE TO FOUNDATION
THESE SPECIFIC COMPONENTS ARE IN ADDTION TO ALL GENERAL COMPONENTS LISTED IN SECTION 1705.11 OF IBC 2015 AND SECTION 107.3.1 OF ICC 500–14, AND ARE SUBJECT TO ALL SPECIAL INSPECTIONS AND TESTING AS REQUIRED BY CHAPTER 17 OF IBC 2015, PROJECT SPECIFICATIONS, AND SCHEDULE OF SPECIAL INSPECTIONS. SPECIAL INSPECTION REPORTS SHALL BE SUBMITTED AS PER THE STATEMENT OF SPECIAL INSPECTIONS.
2. IN ADDITION TO PROJECT SPECIFICATIONS, SPECIAL INSPECTOR SHALL REFER TO IBC 2015 SECTION 1705 (INCLUDING TABLES 1705.2.3 THROUGH 1705.8) FOR SPECIFIC REQUIREMENTS FOR INSPECTION AND VERIFICATION OF MISCELLANEOUS STEEL, CONCRETE, SOILS, AND FOUNDATIONS. SPECIAL INSPECTIONS FOR STRUCTURAL STEEL SHALL BE IN ACCORDANCE WITH THE QUALITY ASSURANCE REQUIREMENTS OF AISC 360. MASONRY CONSTRUCTION SHALL BE INSPECTED AND VERIFIED IN ACCORDANCE WITH ACI 530 AND ACI 530.1 QUALITY ASSURANCE PROGRAM REQUIREMENTS.
3. FOR PURPOSES OF SPECIAL INSPECTIONS, SHELTER SHALL BE CONSIDERED AS RISK CATEGORY IV.
4. IN ADDITION TO SPECIAL INSPECTIONS, STRUCTURAL OBSERVATIONS WILL BE REQUIRED AT SIGNIFICANT STAGES OF CONSTRUCTION (TO BE COORDINATED WITH STRUCTURAL ENGINEER). CONTRACTOR SHALL GIVE AT LEAST 5 DAYS NOTICE PRIOR TO ENGINEER'S OBSERVATION OF THESE STAGES.

CLASSROOM ADDITION
FOR
UNION HILL SCHOOL
SOMERVILLE, ALABAMA
FOR THE
MORGAN COUNTY BOARD OF EDUCATION

McKEE and ASSOCIATES
ARCHITECTS, INC.
631 SOUTH HULL STREET , MONTGOMERY , ALABAMA 36104 (334) 834-9933

ALABAMA REGISTERED NO. 22214 PROFESSIONAL ENGINEER RICHARD MARK
10-13-22

SHEET TITLE : GENERAL NOTES, SCHEDULES, AND TYPICAL DETAILS

MCKEE JOB # : 22-134

DRAWN BY : RAS

DATE: 10.13.2022

REVISED DATE:

REVISED DATE:

REVISED DATE:

SHEET NO. : S0.1

S:\MCKEE\Union Hill Classroom addn\S-Union Hill - SECTIONS.dwg
- Thursday, October 13, 2022 10:40:57 AM

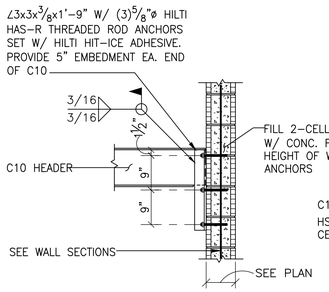

STAIR HEADER CONNECTION

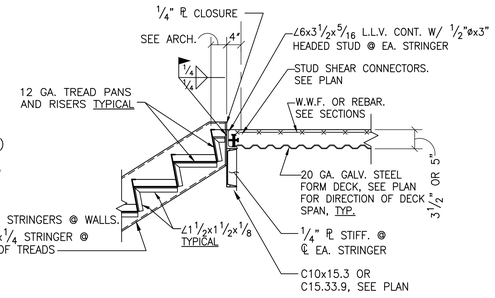

LANDING @ SECOND FLOOR COMPOSITE SLAB

GENERAL CONTRACTOR'S OPTION:
UPPER 3" OF WALL MAY BE FORMED & POURED W/ SLAB IN LIEU OF CUTTING C.M.U., TYPICAL.

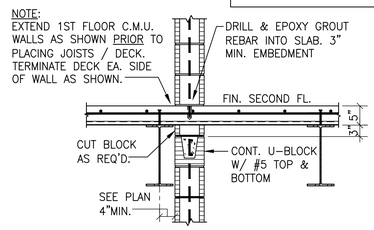

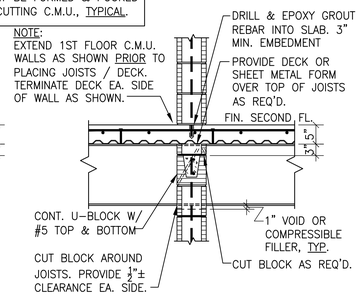

WALL PARALLEL TO JOISTS

WALL PERPENDICULAR TO JOISTS

TYPICAL C.M.U. WALL / SECOND FLOOR DETAILS FOR NON-LOAD BEARING STACKED WALLS (TORNADO SHELTER CONDITION)

(DETAIL SIMILAR AT NON-SHELTER CONDITION)

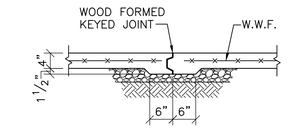

TYPICAL SLAB CONSTRUCTION JOINT DETAIL-(C.J.)

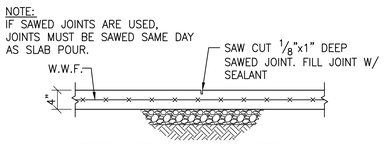

ALTERNATE SLAB CONSTRUCTION JOINT DETAIL (SAWED JOINT)

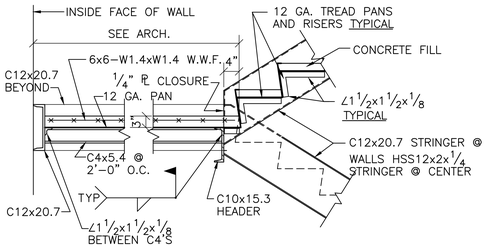

LANDING @ INTERMEDIATE LEVEL

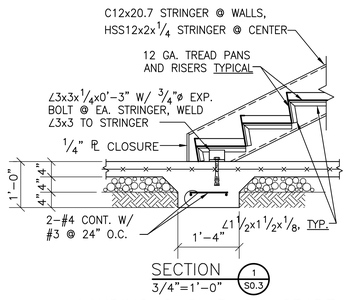

LANDING @ SLAB-ON-GRADE

TYPICAL STAIR FRAMING DETAILS

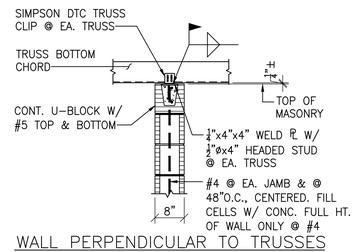

WALL PERPENDICULAR TO TRUSSES

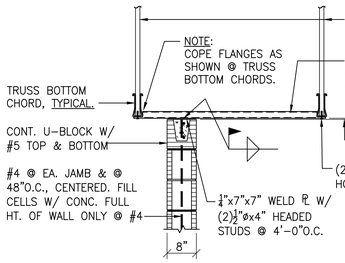

WALL PARALLEL TO TRUSSES

WALL PARALLEL TO TRUSSES

WALL PERPENDICULAR TO TRUSSES

TYPICAL NON-BEARING C.M.U. WALL ANCHORAGE DETAIL AT COLD-FORMED TRUSSES

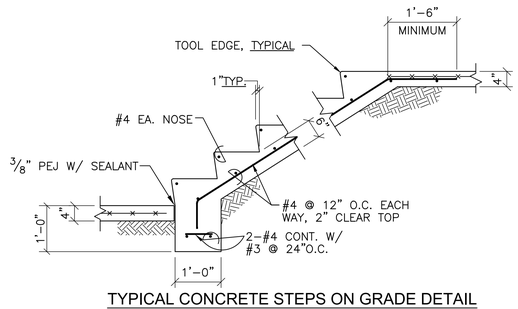

TYPICAL CONCRETE STEPS ON GRADE DETAIL

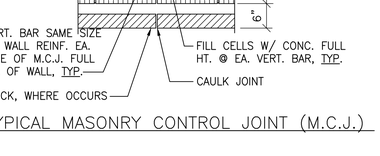

TYPICAL MASONRY CONTROL JOINT (M.C.J.)

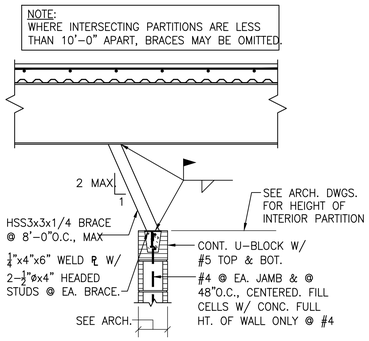

WALL PERPENDICULAR TO BEAMS

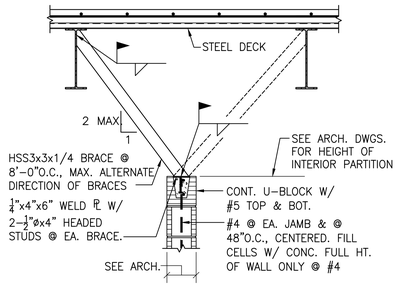

WALL PARALLEL TO BEAMS

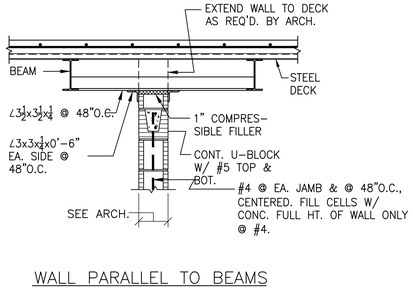

WALL PARALLEL TO BEAMS

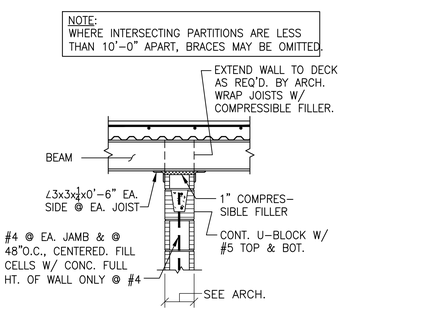

WALL PERPENDICULAR TO BEAMS

TYPICAL CMU WALL BRACING DETAILS

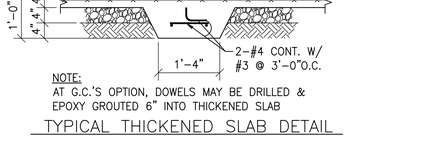

TYPICAL THICKENED SLAB DETAIL

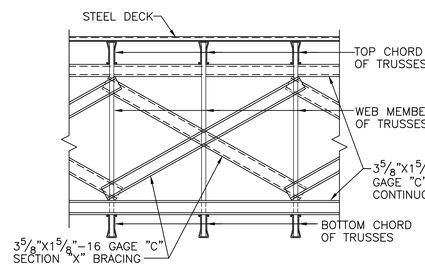

TYPICAL TRUSS 'X'-BRACING DETAIL

NOTE:
WHERE "PIGGYBACK" TRUSSES OCCUR, PROVIDE ADDITIONAL (SEPARATE) VERTICAL 'X' BRACING FOR "PIGGYBACKS"

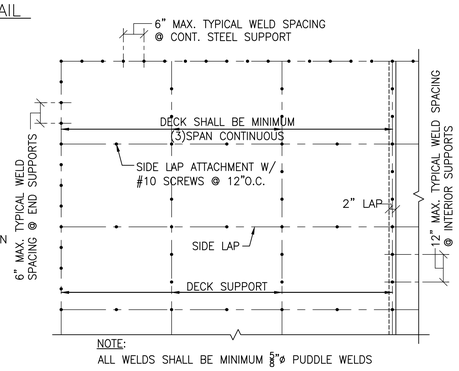

TYPICAL ROOF DECK WELDING REQUIREMENTS
NO SCALE

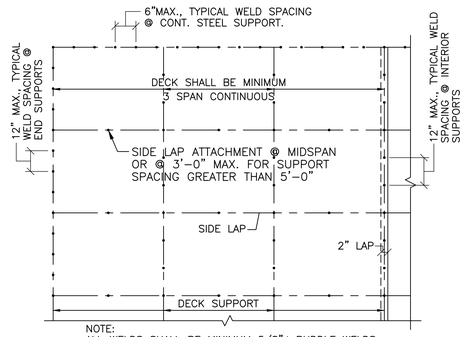

TYPICAL FLOOR DECK WELDING REQUIREMENTS
NO SCALE

CLASSROOM ADDITION
FOR
UNION HILL SCHOOL
SOMERVILLE, ALABAMA
FOR THE
MORGAN COUNTY BOARD OF EDUCATION

McKEE and ASSOCIATES
ARCHITECTS, INC.
631 SOUTH HULL STREET, MONTGOMERY, ALABAMA 36104 (334) 834-9933

REGISTERED ARCHITECT
ROBERT A. SMITH
NO. 22214
STATE OF ALABAMA
10-13-22

SHEET TITLE :	TYPICAL DETAILS
MCKEE JOB # :	22-134
DRAWN BY :	RAS
DATE:	10.13.2022
REVISED DATE:	
REVISED DATE:	
REVISED DATE:	

SHEET NO. : S0.2

- J:\MCKEE-Union Hill Classroom addn\S>Union Hill - DETAILS.dwg
- Thursday, October 13, 2022 10:40:58 AM

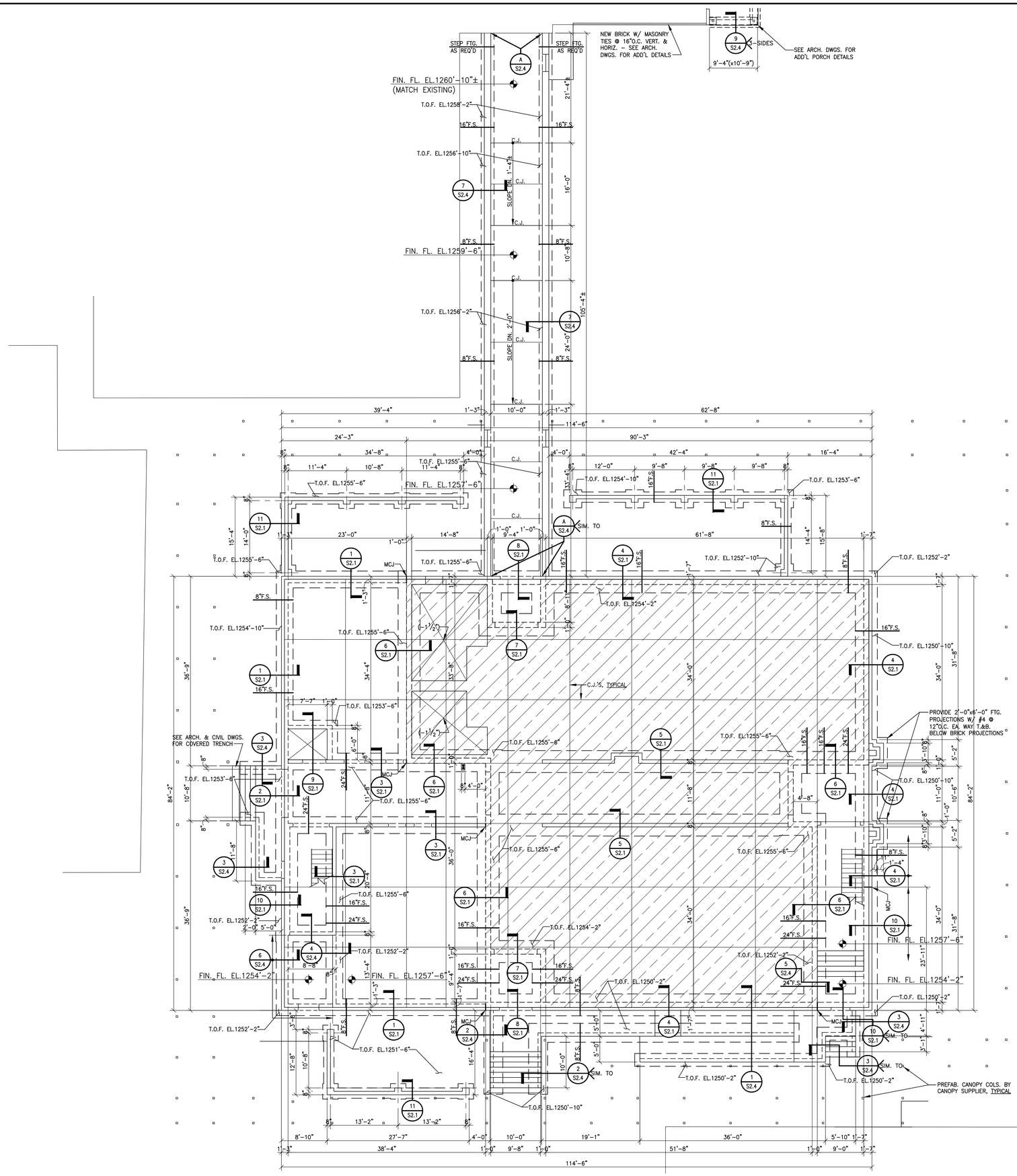

NOTE:
GROUT ALL FIRST FLOOR CMU WALLS TIGHT TO UNDERSIDE OF SECOND FLOOR SLAB.

DO NOT PLACE SECOND FLOOR C.M.U. WALLS UNTIL FIRST FLOOR WALLS ARE TIGHT TO UNDERSIDE OF SLAB, TYPICAL.

WHERE FIRST FLOOR WALLS ARE INTERUPTED BY PERPENDICULAR BEAMS, EXTEND BLOCK AROUND BEAM TO UNDERSIDE OF SLAB PROVIDING A $\frac{1}{2}$"± GAP EA. SIDE & 1" GAP BELOW UNDERSIDE OF BEAM. SEE SHEET SO.2 FOR TYPICAL STACKED WALL CONDITION.

NOTE:
PROVIDE M.C.J.'S WHERE NON-SHELTER WALLS ABUT SHELTER WALLS & @ 25'-4" MAXIMUM SPACING. SEE MASONRY GENERAL NOTE "6" ON SHT. SO.1 & TYPICAL MASONRY CONTROL JOINT DETAIL ON SHEET SO.2. COORDINATE EXACT LOCATIONS W/ ARCH.

NOTE:
PROVIDE A TYPICAL THICKENED SLAB UNDER ALL C.M.U. PARTITIONS NOT BEARING ON A FOOTING. SEE SHEET SO.2 FOR TYPICAL DETAIL.

FLOOR CONSTRUCTION
4" CONCRETE SLAB W/ 6x6-W1.4x W1.4 W.W.F. OVER VAPOR BARRIER OVER 4" POROUS FILL.
FINISH FLOOR ELEV. = 1257'-6"(0'-0")

N

FOUNDATION PLAN
SCALE: 1/8" = 1'-0"

CLASSROOM ADDITION
FOR
UNION HILL SCHOOL
SOMERVILLE, ALABAMA
FOR THE
MORGAN COUNTY BOARD OF EDUCATION

McKEE and ASSOCIATES
ARCHITECTS, INC.
631 SOUTH HULL STREET, MONTGOMERY, ALABAMA 36104 (334) 834-9933

REGISTERED ARCHITECT
STATE OF ALABAMA
NO. 2214
RICHARD MARK McKEE
10/13/22

SHEET TITLE : FOUNDATION PLAN

MCKEE JOB # : 22-134

DRAWN BY : RAS

DATE: 10.13.2022

REVISED DATE:

REVISED DATE:

REVISED DATE:

SHEET NO. : S1.1

- S:\McKEE\Union Hill Classroom addn\S-Union Hill - PLANS.dwg
- Thursday, October 13, 2022 10:40:58 AM

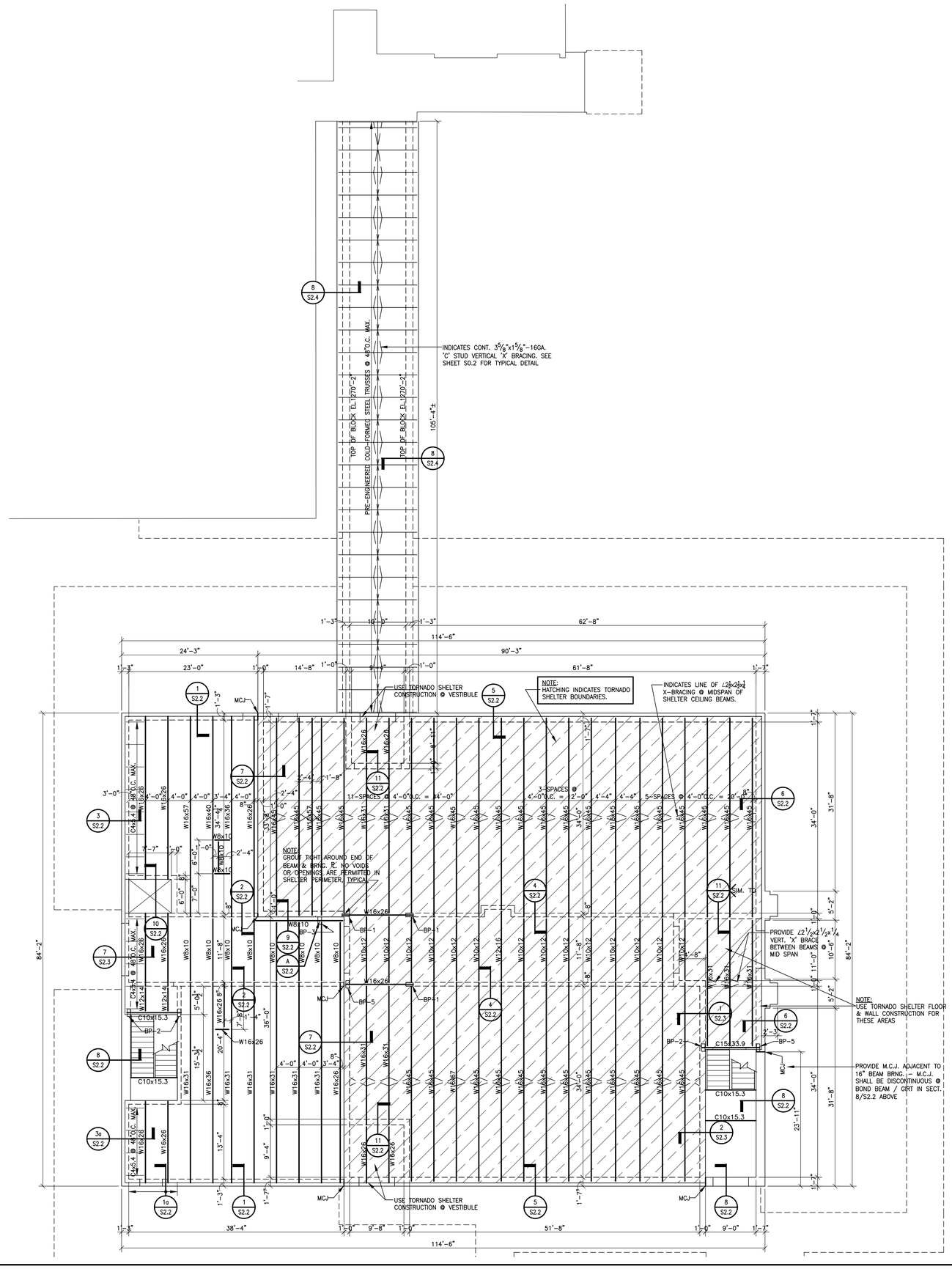

LOW ROOF CONSTRUCTION

5/8" THICK APA RATED PLYWOOD DECK, EXPOSURE 1, WITH PANEL IDENTIFICATION INDEX OF 40/20 OVER 2x4 NO.2 SYP SLEEPERS @ 24"O.C. OVER RIGID INSULATION OVER 1½" DEEP, 22 GAGE, WIDE RIB STEEL DECK W/ THE FOLLOWING MINIMUM SECTION PROPERTIES PER FOOT OF WIDTH:

$S=0.19$ IN.^{3} $I_+=0.16$ IN.^{4} $I_-=0.18$ IN.^{4}

OVER PRE-ENGINEERED PREFABRICATED COLD-FORMED STEEL TRUSSES @ 48"O.C. MAXIMUM.

NOTE:
PROVIDE PLYCLIPS @ MID SPAN BETWEEN SLEEPERS & RAFTERS AT ALL JOINTS IN ADJACENT ROOF DECK SHEETS.

NOTE:

GROUT ALL FIRST FLOOR CMU WALLS TIGHT TO UNDERSIDE OF SECOND FLOOR SLAB.

DO NOT PLACE SECOND FLOOR C.M.U. WALLS UNTIL FIRST FLOOR WALLS ARE TIGHT TO UNDERSIDE OF SLAB, TYPICAL.

WHERE FIRST FLOOR WALLS ARE INTERUPTED BY PERPENDICULAR BEAMS, EXTEND BLOCK AROUND BEAM TO UNDERSIDE OF SLAB PROVIDING A ½"± GAP EA. SIDE & 1" GAP BELOW UNDERSIDE OF BEAM. SEE SHEET S0.2 FOR TYPICAL STACKED WALL CONDITION.

SECOND FLOOR TORNADO SHELTER CEILING SLAB CONSTRUCTION

5" CONC. SLAB W/ #4 @ 12"O.C. EA. WAY, 1" CLEAR TOP OVER 1" DEEP, 20 GAGE, GALVANIZED CORRUGATED STEEL FORM DECK W/ THE FOLLOWING MINIMUM SECTION PROPERTIES PER FOOT OF WIDTH:

$S=0.17$ IN.^{3} $I=0.09$ IN.^{4}

NOTE:
PROVIDE ½"ø x 4" HEADED STUDS @ 24"O.C. TO TOP FLANGE OF ALL CEILING SLAB BEAMS.

SECOND FLOOR NON-SHELTER CONSTRUCTION

¾" THICK NORMAL WEIGHT CONCRETE SLAB W/ 6x6-W2.9xW2.9 W.W.F. 1" CLEAR TOP, OVER 1" DEEP GALVANIZED, 20 GAGE STEEL FORM DECK W/ THE FOLLOWING MIN. SECTION PROPERTIES:

$S_+=0.036$ IN.^{3} $S_-=0.037$ IN.^{3} $I=0.011$ IN.^{4}

NOTE:
W.W.F. SHALL BE IN SHEETS. ROLLS ARE UNACCEPTABLE

SECOND FLOOR AND LOW ROOF FRAMING PLAN

SCALE: 1/8" = 1'-0"

CLASSROOM ADDITION
FOR
UNION HILL SCHOOL
SOMERVILLE, ALABAMA
FOR THE
MORGAN COUNTY BOARD OF EDUCATION

McKEE and ASSOCIATES
ARCHITECTS, INC.
631 SOUTH HULL STREET . MONTGOMERY . ALABAMA 36104 (334) 834-9933

ALABAMA REGISTERED NO. 22214 LICENSED TO PRACTICE RICHARD MARK McKEE 10-13-22

SHEET TITLE :	SECOND FLOOR AND LOW ROOF FRAMING PLAN
MCKEE JOB # :	22-134
DRAWN BY :	RAS
DATE:	10.13.2022
REVISED DATE:	
REVISED DATE:	
REVISED DATE:	

SHEET NO. : S1.2

- S:\McKEE\Union Hill Classroom addn\S-Union Hill - PLANS.dwg
- Thursday, October 13, 2022 10:40:59 AM

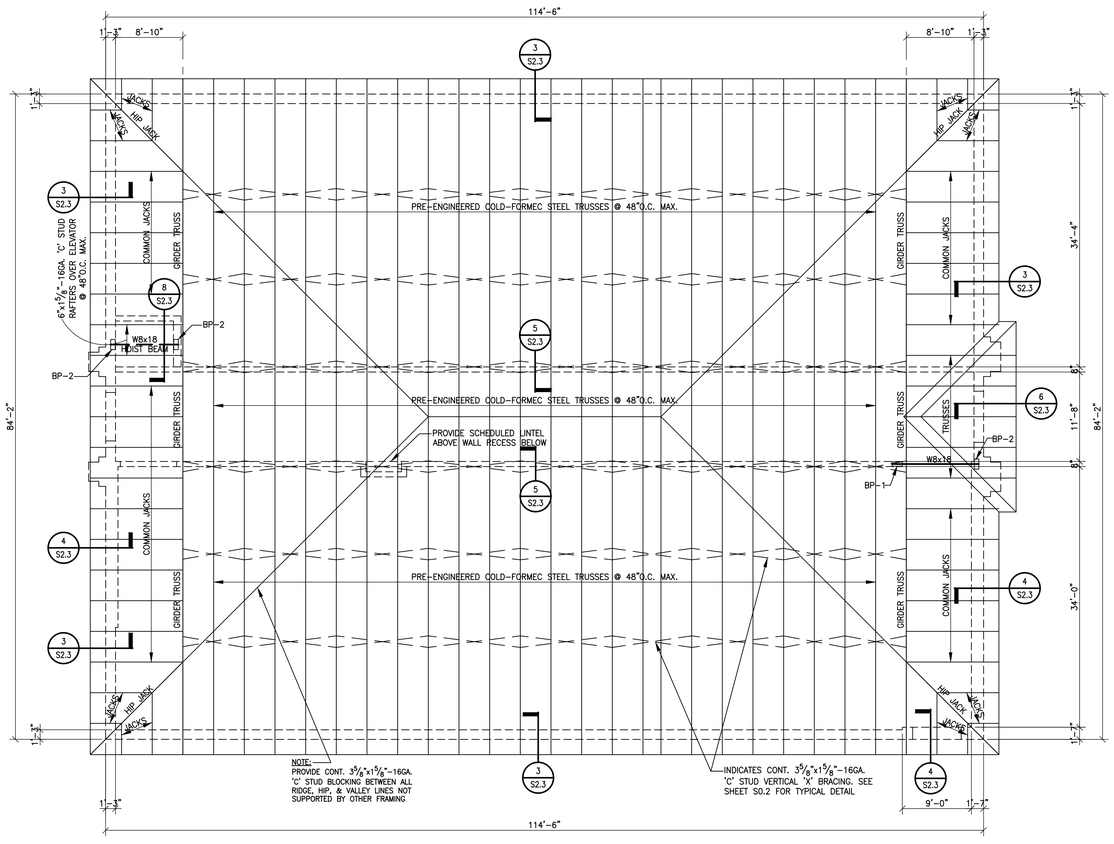

N

ROOF FRAMING PLAN

SCALE: 1/8" = 1'-0"

ROOF CONSTRUCTION

5/8" THICK APA RATED PLYWOOD DECK, EXPOSURE 1, WITH PANEL IDENTIFICATION INDEX OF 40/20 OVER 2x4 NO.2 SYP SLEEPERS @ 24"O.C. OVER RIGID INSULATION OVER 1 1/2" DEEP, 22 GAGE, WIDE RIB STEEL DECK W/ THE FOLLOWING MINIMUM SECTION PROPERTIES PER FOOT OF WIDTH:

$S=0.19$ IN.^{3} $I_+=0.16$ IN.^{4} $I_-=0.18$ IN.^{4}

OVER PRE-ENGINEERED PREFABRICATED COLD-FORMED STEEL TRUSSES @ 48"O.C. MAXIMUM.

NOTE:
PROVIDE PLYCLIPS @ MID SPAN BETWEEN SLEEPERS & RAFTERS AT ALL JOINTS IN ADJACENT ROOF DECK SHEETS.

CLASSROOM ADDITION
FOR
UNION HILL SCHOOL
SOMERVILLE, ALABAMA
FOR THE
MORGAN COUNTY BOARD OF EDUCATION

McKEE and ASSOCIATES
ARCHITECTS, INC.
631 SOUTH HULL STREET, MONTGOMERY, ALABAMA 36104 (334) 834-9933



SHEET TITLE : ROOF FRAMING PLAN

MCKEE JOB # : 22-134

DRAWN BY : RAS

DATE: 10.13.2022

REVISED DATE:

REVISED DATE:

REVISED DATE:

SHEET NO. : S1.3

- S:\McKEE-Union Hill Classroom addn\>Union Hill - PLANS.dwg
- Thursday, October 13, 2022 10:40:59 AM

NOTE:
SHORE & SUPPORT ALL FOUNDATION WALLS UNTIL SLAB IS IN PLACE

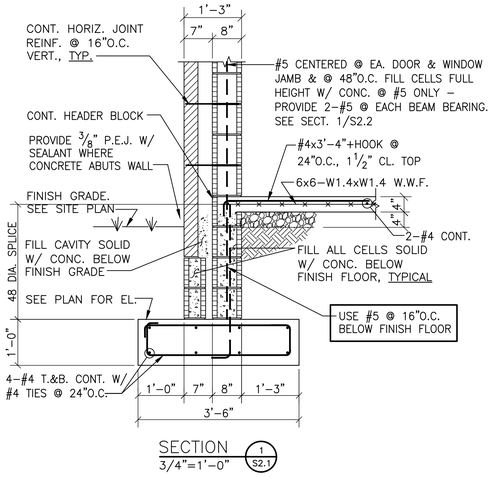

SECTION 1 / 3/4"=1'-0" (S2.1)

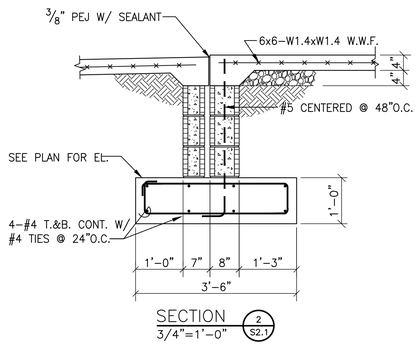

SECTION 2 / 3/4"=1'-0" (S2.1)

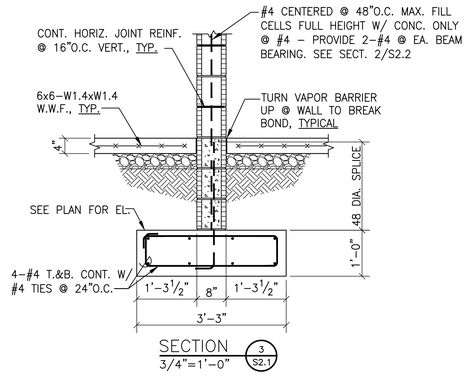

SECTION 3 / 3/4"=1'-0" (S2.1)

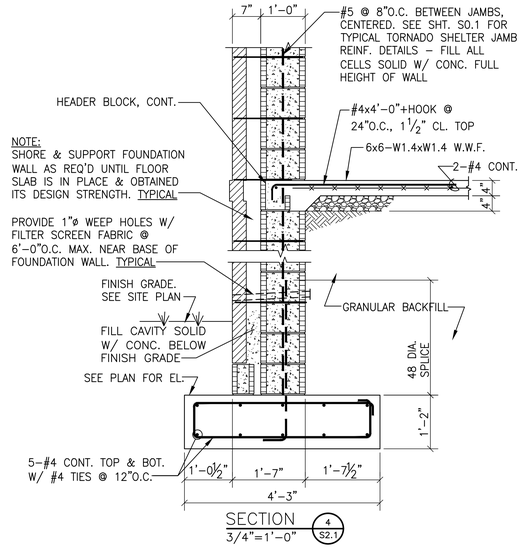

SECTION 4 / 3/4"=1'-0" (S2.1)

SECTION 5 / 3/4"=1'-0" (S2.1)

SECTION 6 / 3/4"=1'-0" (S2.1)

SECTION 7 / 3/4"=1'-0" (S2.1)

SECTION 8 / 3/4"=1'-0" (S2.1)

SECTION 9 / 3/4"=1'-0" (S2.1)

SECTION 10 / 3/4"=1'-0" (S2.1)

SECTION 11 / 3/4"=1'-0" (S2.1)

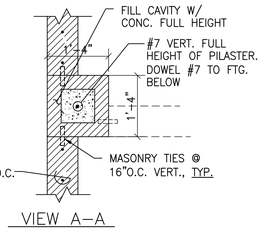

VIEW A–A

CLASSROOM ADDITION
FOR
UNION HILL SCHOOL
SOMERVILLE, ALABAMA
FOR THE
MORGAN COUNTY BOARD OF EDUCATION

McKEE and ASSOCIATES
ARCHITECTS, INC.
631 SOUTH HULL STREET . MONTGOMERY . ALABAMA 36104 (334) 834-9933

REGISTERED ARCHITECT
ROBERT A. SMITH
NO. 22314
STATE OF ALABAMA
10-13-22

SHEET TITLE :	SECTIONS AND DETAILS
MCKEE JOB # :	22-134
DRAWN BY :	RAS
DATE:	10.13.2022
REVISED DATE:	
REVISED DATE:	
REVISED DATE:	

SHEET NO. : S2.1

- S:\MCKEE\Union Hill Classroom addn\S-Union Hill - SECTIONS.dwg
- Thursday, October 13, 2022 10:41:00 AM

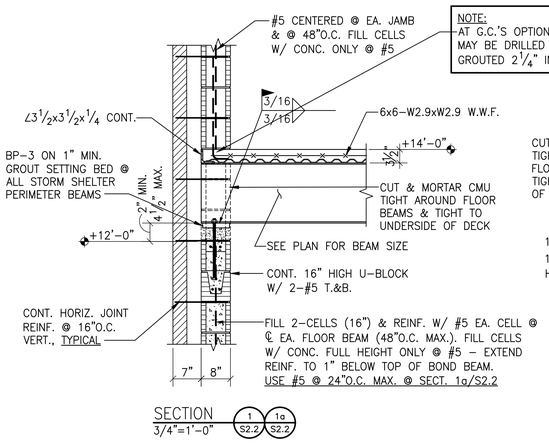

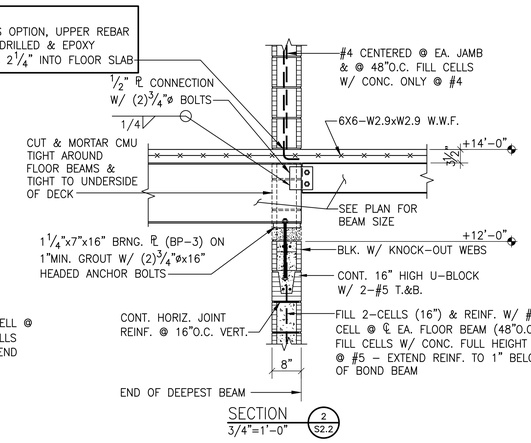

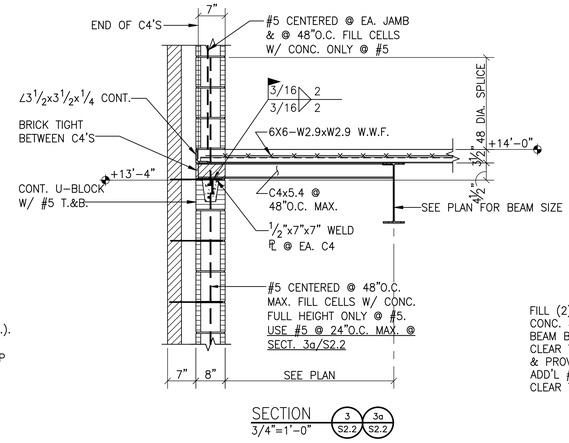

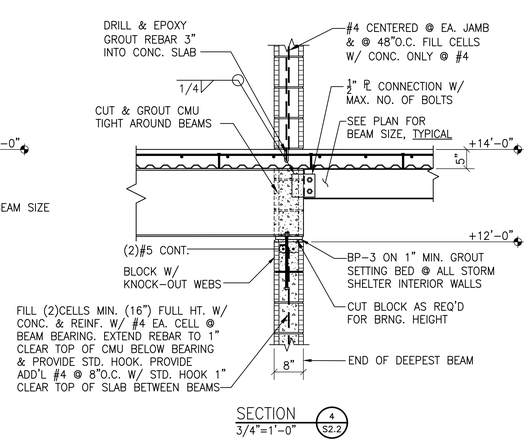

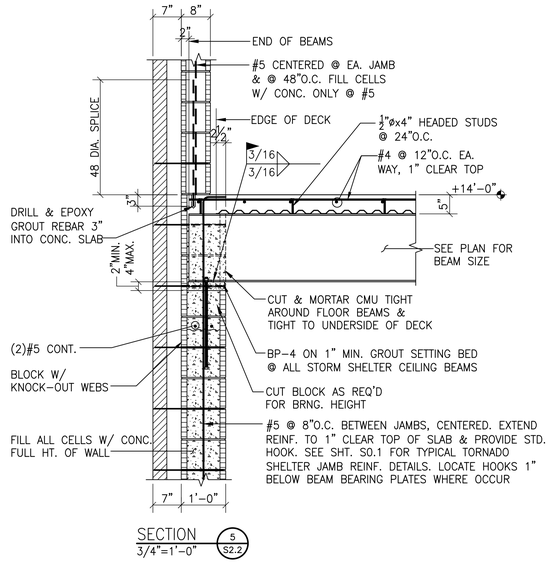

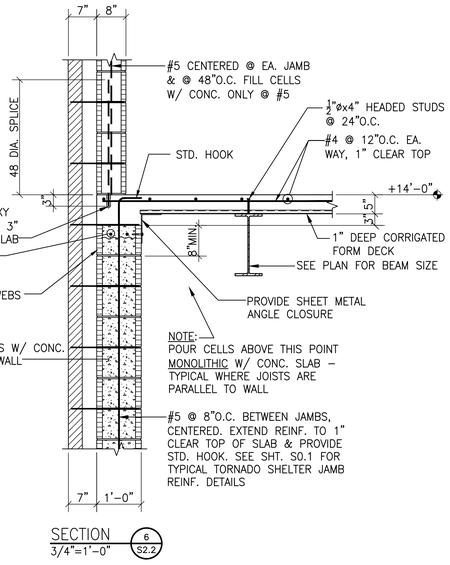

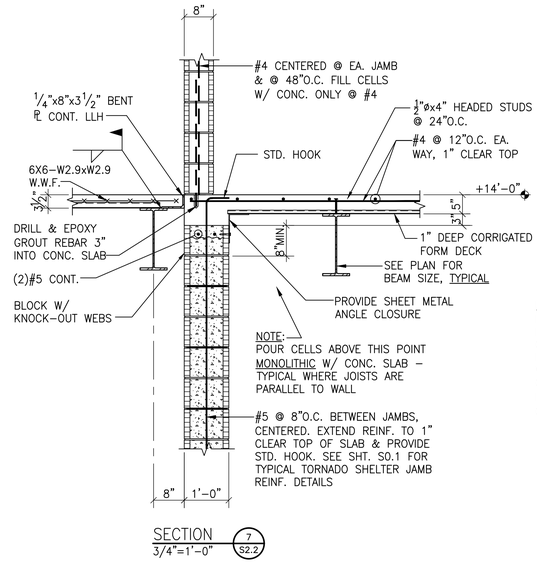

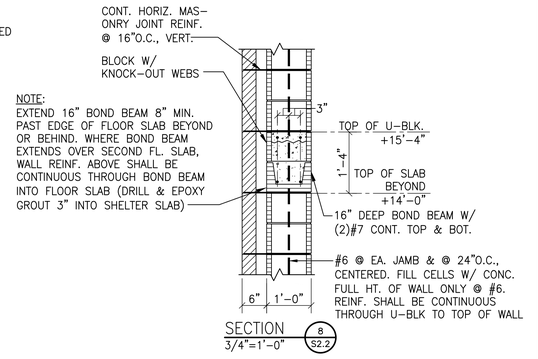

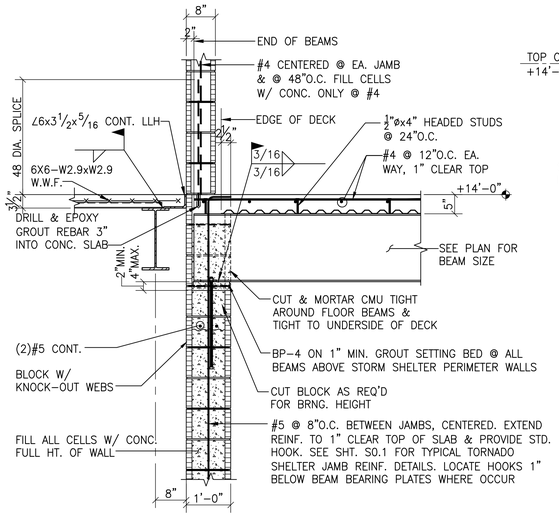

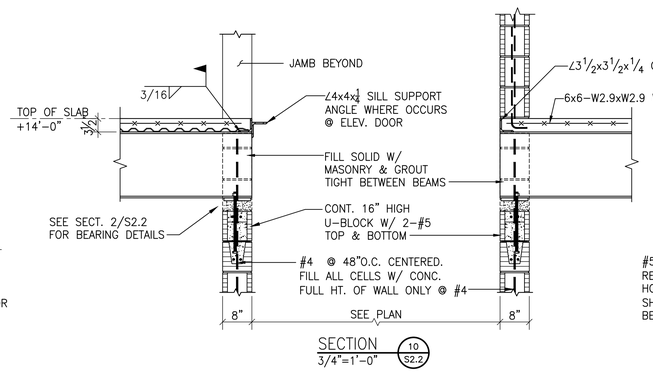

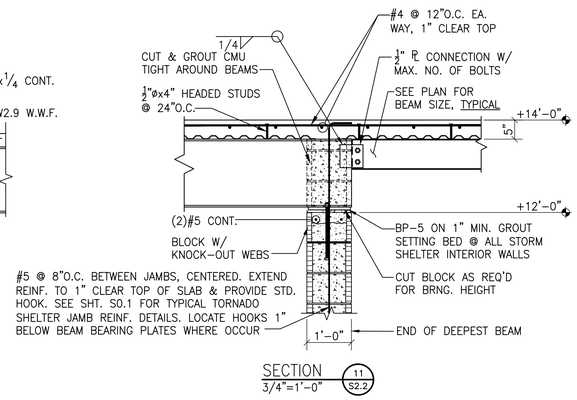

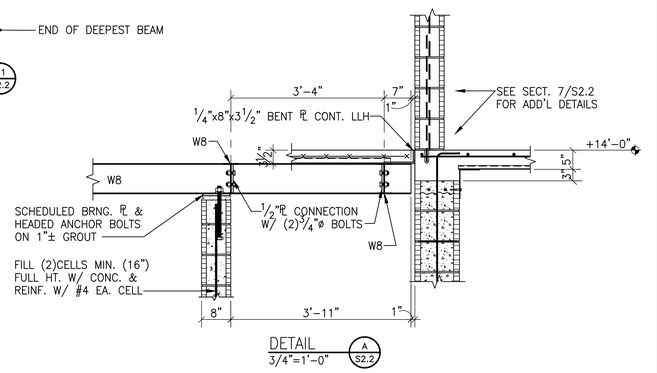

CLASSROOM ADDITION
FOR
UNION HILL SCHOOL
SOMERVILLE, ALABAMA
FOR THE
MORGAN COUNTY BOARD OF EDUCATION

McKEE and ASSOCIATES
ARCHITECTS, INC.
631 SOUTH HULL STREET . MONTGOMERY . ALABAMA 36104 (334) 834-9933

ALABAMA REGISTERED ROY A. STEWART NO. 22214 PROFESSIONAL ENGINEER
ALABAMA REGISTERED RICHARD A. MCKEE NO. 10178 PROFESSIONAL ENGINEER
10-13-22

SHEET TITLE :	SECTIONS AND DETAILS
MCKEE JOB # :	22-134
DRAWN BY :	RAS
DATE:	10.13.2022
REVISED DATE:	
REVISED DATE:	
REVISED DATE:	

SHEET NO. : S2.2

- S:\McKee\Union Hill Classroom addn\Union Hill - SECTIONS.dwg
- Thursday, October 13, 2022 10:41:01 AM

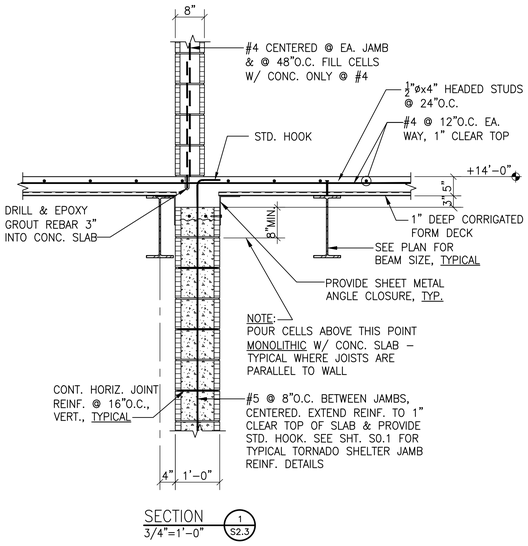

SECTION 1 S2.3
3/4"=1'-0"

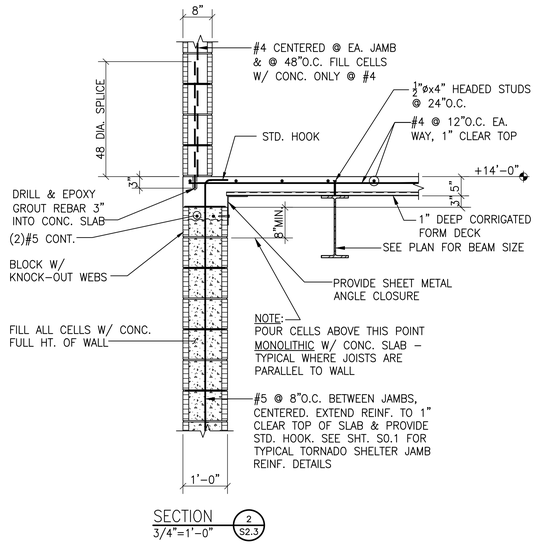

SECTION 2 S2.3
3/4"=1'-0"

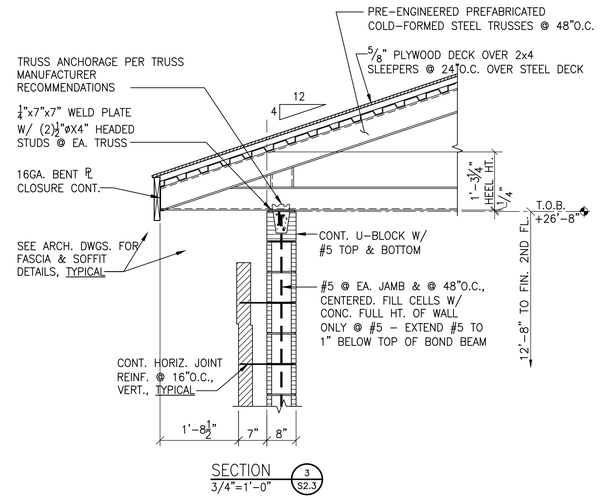

SECTION 3 S2.3
3/4"=1'-0"

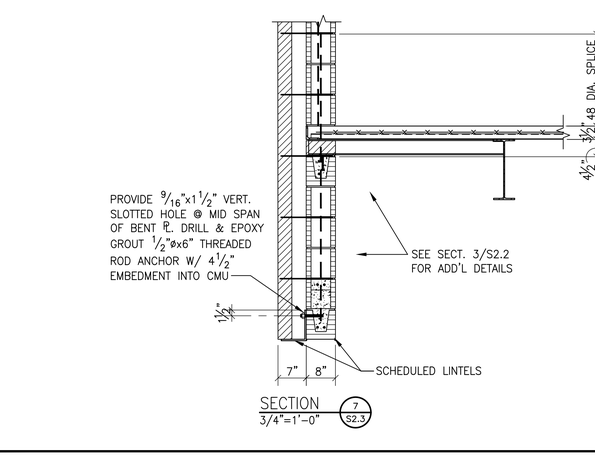

SECTION 4 S2.3
3/4"=1'-0"

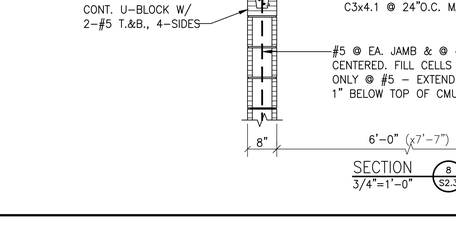

SECTION 5 S2.3
3/4"=1'-0"

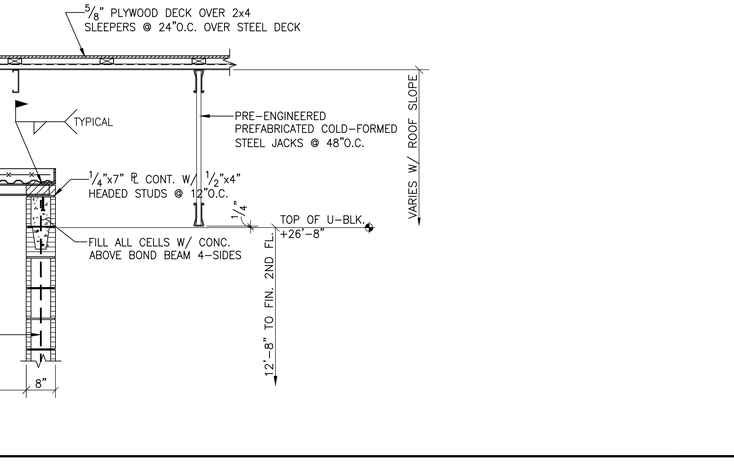

SECTION 6 S2.3
3/4"=1'-0"

SECTION 7 S2.3
3/4"=1'-0"

SECTION 8 S2.3
3/4"=1'-0"

CLASSROOM ADDITION
FOR
UNION HILL SCHOOL
SOMERVILLE, ALABAMA
FOR THE
MORGAN COUNTY BOARD OF EDUCATION

McKEE and ASSOCIATES
ARCHITECTS, INC.
631 SOUTH HULL STREET, MONTGOMERY, ALABAMA 36104 (334) 834-9933

ALABAMA REGISTERED ARCHITECT NO. 22214 BY BOARD MEMBER 10-13-22

SHEET TITLE :	SECTIONS AND DETAILS
MCKEE JOB # :	22-134
DRAWN BY :	RAS
DATE:	10.13.2022
REVISED DATE:	
REVISED DATE:	
REVISED DATE:	

SHEET NO. : S2.3

- S:\MCKEE\Union Hill Classroom addn\S-Union Hill - SECTIONS.dwg
- Thursday, October 13, 2022 10:41:02 AM

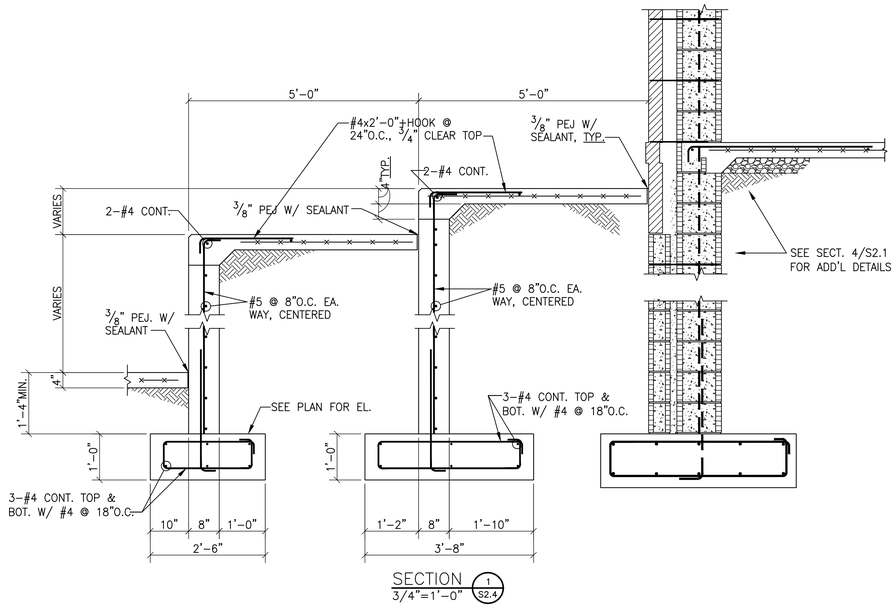

SECTION 1 S2.4
3/4"=1'-0"

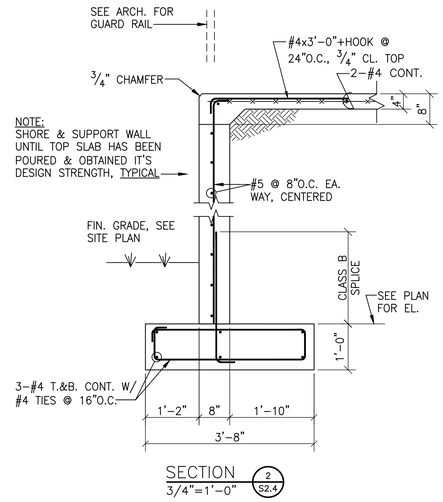

SECTION 2 S2.4
3/4"=1'-0"

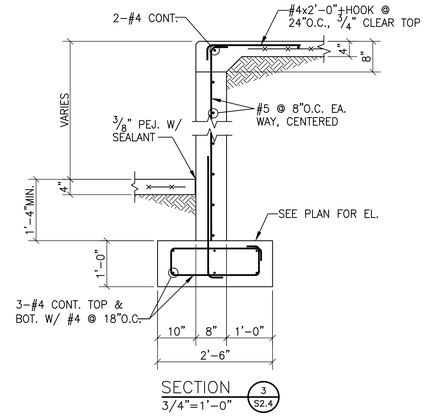

SECTION 3 S2.4
3/4"=1'-0"

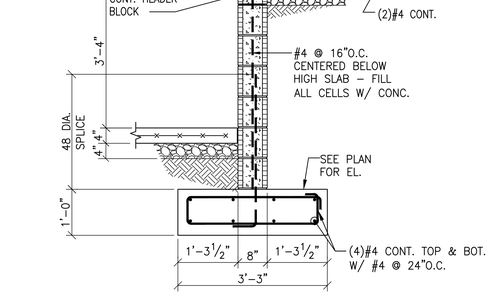

SECTION 4 S2.4
3/4"=1'-0"

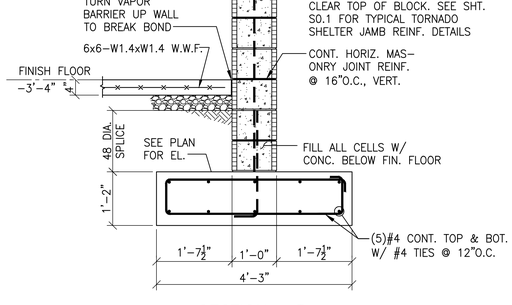

SECTION 5 S2.4
3/4"=1'-0"

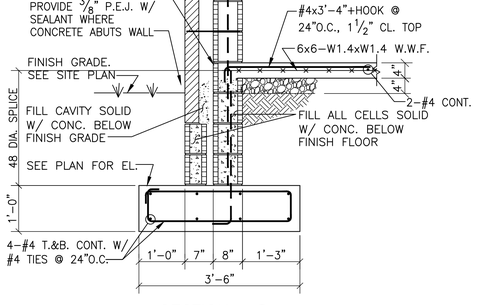

SECTION 6 S2.4
3/4"=1'-0"

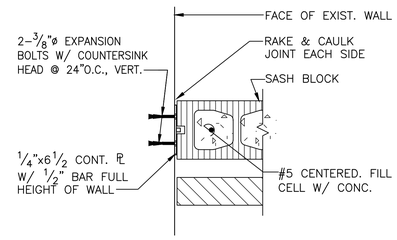

VIEW A-A

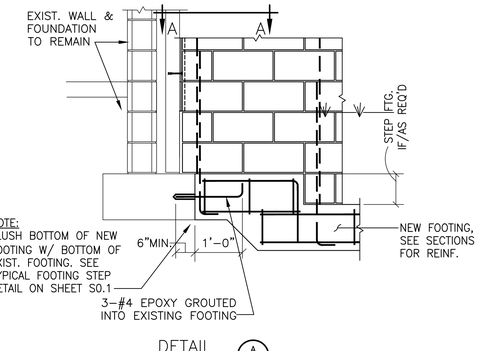

DETAIL A S2.4
3/4"=1'-0"

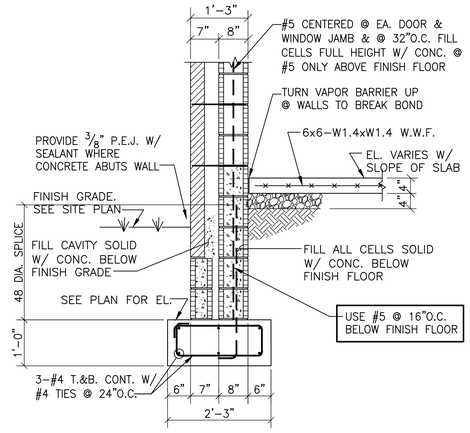

SECTION 7 S2.4
3/4"=1'-0"

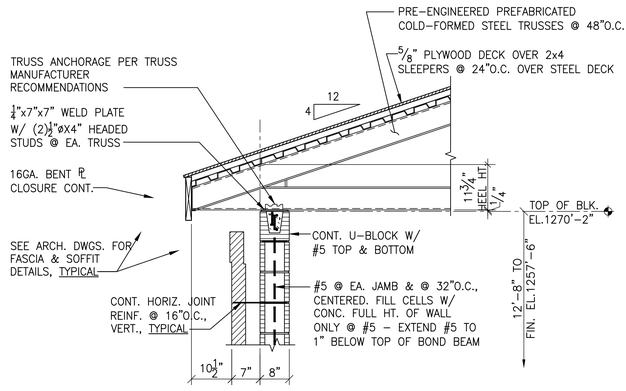

SECTION 8 S2.4
3/4"=1'-0"

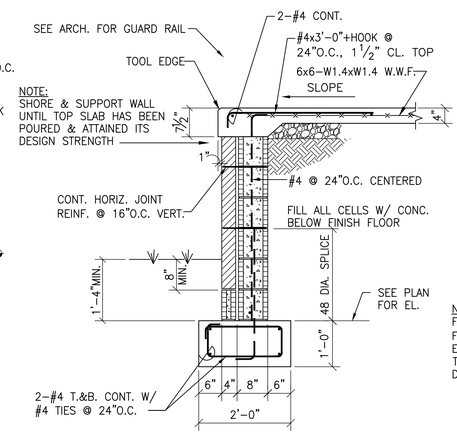

SECTION 9 S2.4
3/4"=1'-0"

CLASSROOM ADDITION
FOR
UNION HILL SCHOOL
SOMERVILLE, ALABAMA
FOR THE
MORGAN COUNTY BOARD OF EDUCATION

McKEE and ASSOCIATES
ARCHITECTS, INC.
631 SOUTH HULL STREET . MONTGOMERY . ALABAMA 36104 (334) 834-9933

REGISTERED ARCHITECT RICHARD A. SIMMONS NO. 22214 STATE OF ALABAMA
RICHARD MARK SIMMONS 10-13-22

SHEET TITLE :	SECTIONS AND DETAILS
MCKEE JOB # :	22-134
DRAWN BY :	RAS
DATE:	10.13.2022
REVISED DATE:	
REVISED DATE:	
REVISED DATE:	

SHEET NO. : S2.4

- S:\McKEE\Union Hill Classroom addn\S-Union Hill - Sections.dwg
- Thursday, October 13, 2022 10:41:03 AM

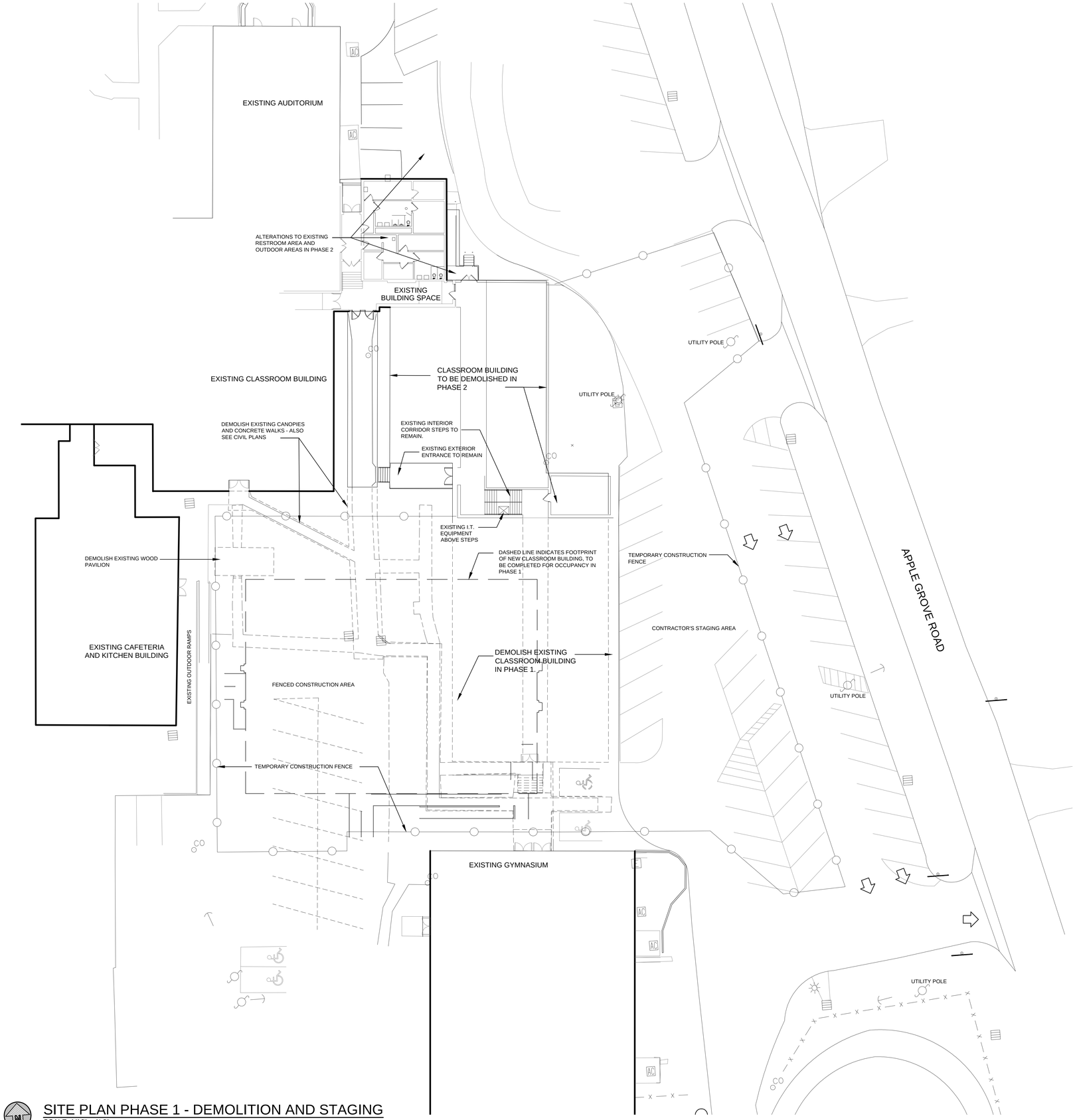

SITE PLAN PHASE 1 - DEMOLITION AND STAGING

SCALE: 1/16" = 1'-0"

CLASSROOM ADDITION

FOR

UNION HILL SCHOOL

SOMERVILLE, ALABAMA

FOR THE

MORGAN COUNTY BOARD OF EDUCATION

McKEE and ASSOCIATES
ARCHITECTS, INC.
631 SOUTH HULL STREET, MONTGOMERY, ALABAMA 36104 (334) 834-9933

STATE OF ALABAMA REGISTERED ARCHITECT
WALTER T. McKEE, JR.
No. 1082
MONTGOMERY, ALA.

SHEET TITLE :	SITE PLAN PHASE 1 - DEMOLITION AND STAGING
MCKEE JOB # :	22-134
DRAWN BY :	LB, VH
DATE:	10-13-2022
REVISED DATE:	
REVISED DATE:	
REVISED DATE:	

SHEET NO. : A0.1

- Z:\2022\22-134 Classroom Addition for Union Hill School\CAD Drawings\Architectural\A0.0 Arch Site Plan.dwg
- Friday, October 14, 2022 10:42:17 AM

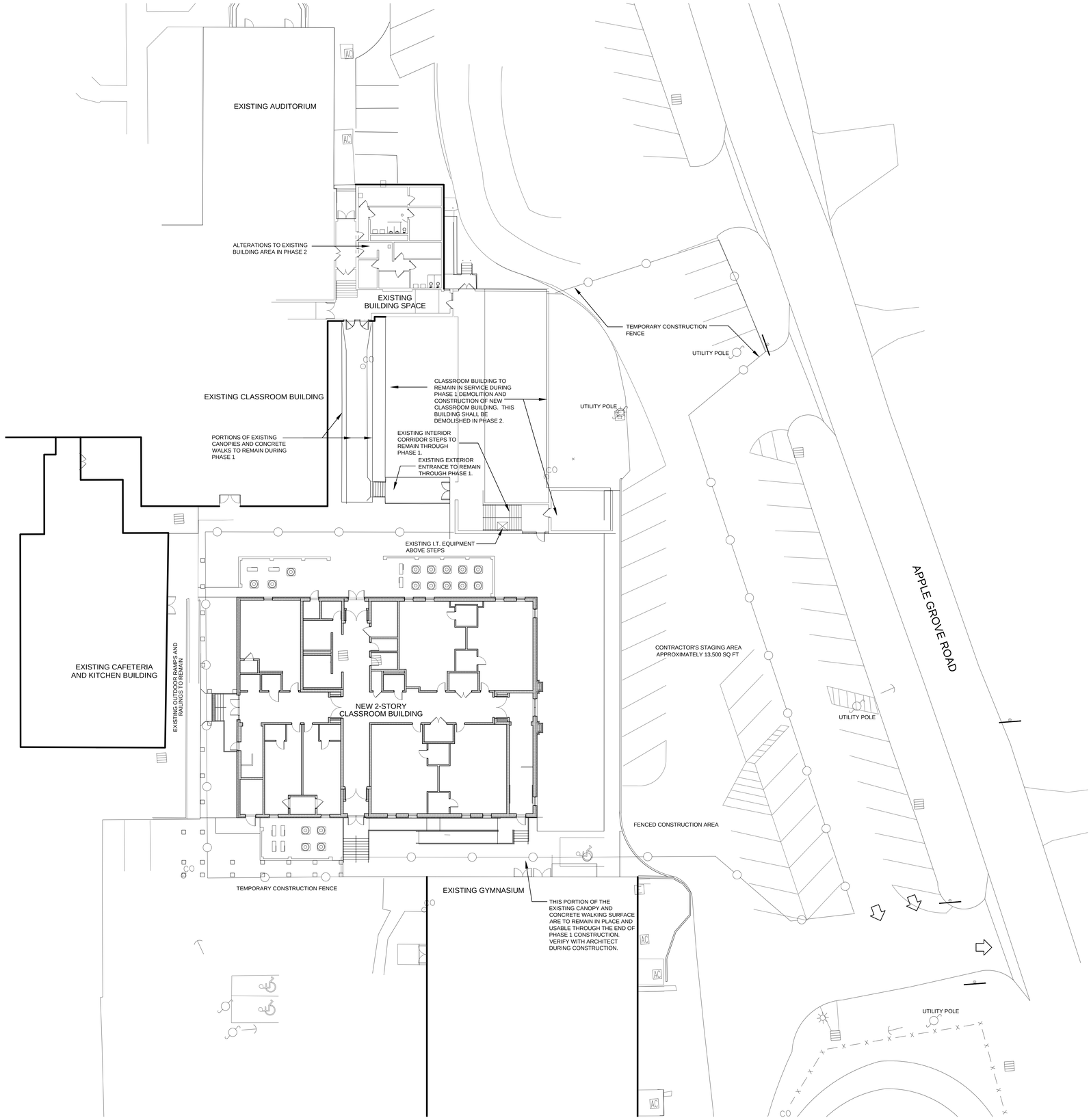

SITE PLAN PHASE 1 - CONSTRUCTION

SCALE: 1/16" = 1'-0"

CLASSROOM ADDITION

FOR

UNION HILL SCHOOL

SOMERVILLE, ALABAMA

FOR THE

MORGAN COUNTY BOARD OF EDUCATION

McKEE and ASSOCIATES
ARCHITECTS, INC.
631 SOUTH HULL STREET , MONTGOMERY , ALABAMA 36104 (334) 834-9933

STATE OF ALABAMA
WALTER T. MCKEE, JR.
NO. 1882
MONTGOMERY, ALA.
REGISTERED ARCHITECT

SHEET TITLE :	SITE PLAN PHASE 1 - CONSTRUCTION
MCKEE JOB # :	22-134
DRAWN BY :	VH
DATE:	10-13-2022
REVISED DATE:	
REVISED DATE:	
REVISED DATE:	

SHEET NO. : A0.2

- Z:\2022\22-134 Classroom Addition for Union Hill School\CAD Drawings\Architectural\A0.0 Arch Site Plan.dwg
- Friday, October 14, 2022 10:42:17 AM

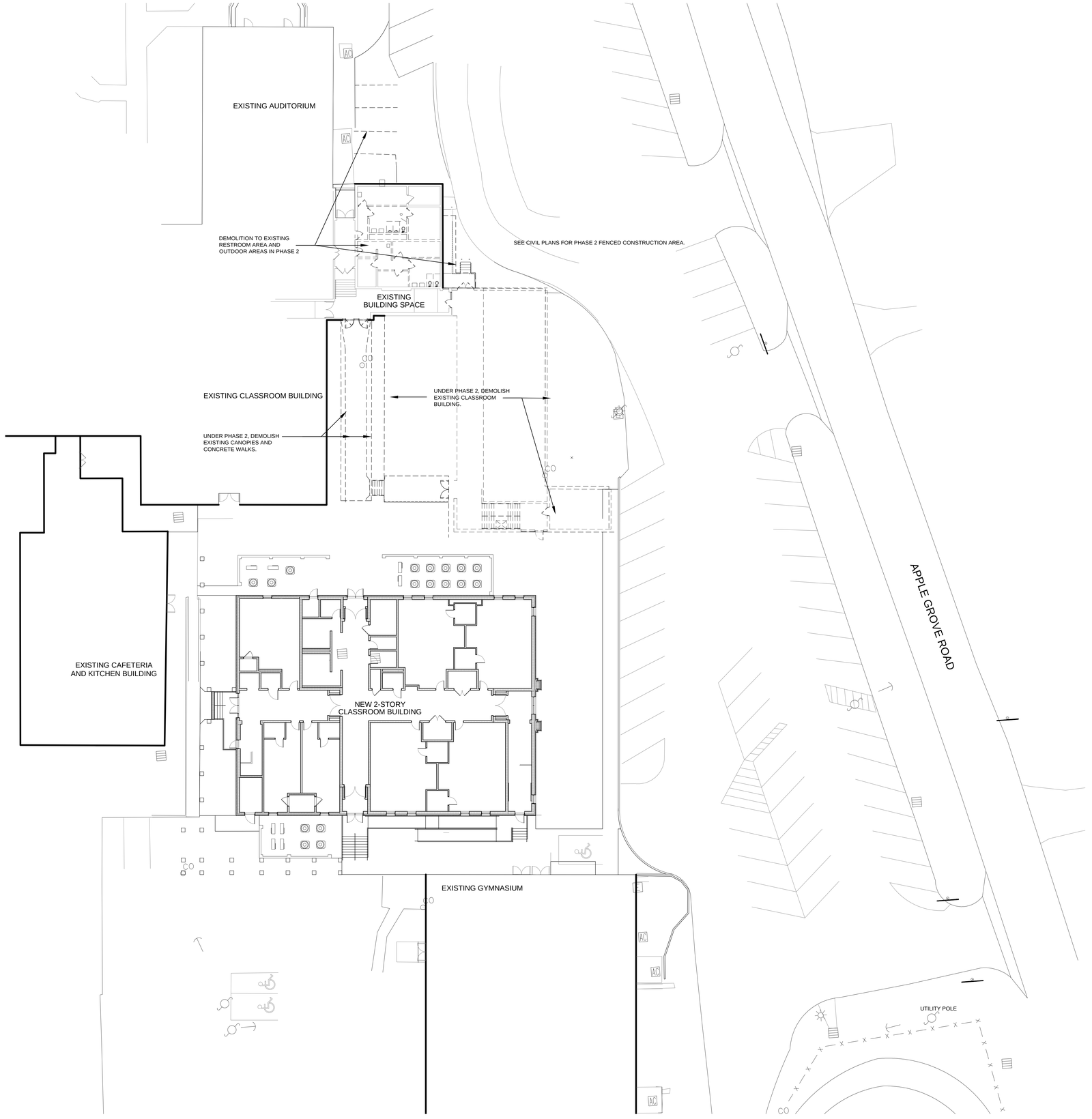

SITE PLAN - PHASE 2 DEMOLITION
SCALE: 1/16" = 1'-0"

CLASSROOM ADDITION
FOR
UNION HILL SCHOOL
SOMERVILLE, ALABAMA
FOR THE
MORGAN COUNTY BOARD OF EDUCATION

McKEE and ASSOCIATES
ARCHITECTS, INC.
631 SOUTH HULL STREET , MONTGOMERY , ALABAMA 36104 (334) 834-9933

STATE OF ALABAMA
REGISTERED ARCHITECT
WALTER T. MCKEE, JR.
No. 1082
MONTGOMERY, ALA.

SHEET TITLE :	SITE PLAN - PHASE 2 DEMOLITION
MCKEE JOB # :	22-134
DRAWN BY :	VH
DATE:	10-13-2022
REVISED DATE:	
REVISED DATE:	
REVISED DATE:	

SHEET NO. : A0.3

- Z:\2022\22-134 Classroom Addition for Union Hill School\CAD Drawings\Architectural\A0.0 Arch Site Plan.dwg
- Friday, October 14, 2022 10:42:17 AM

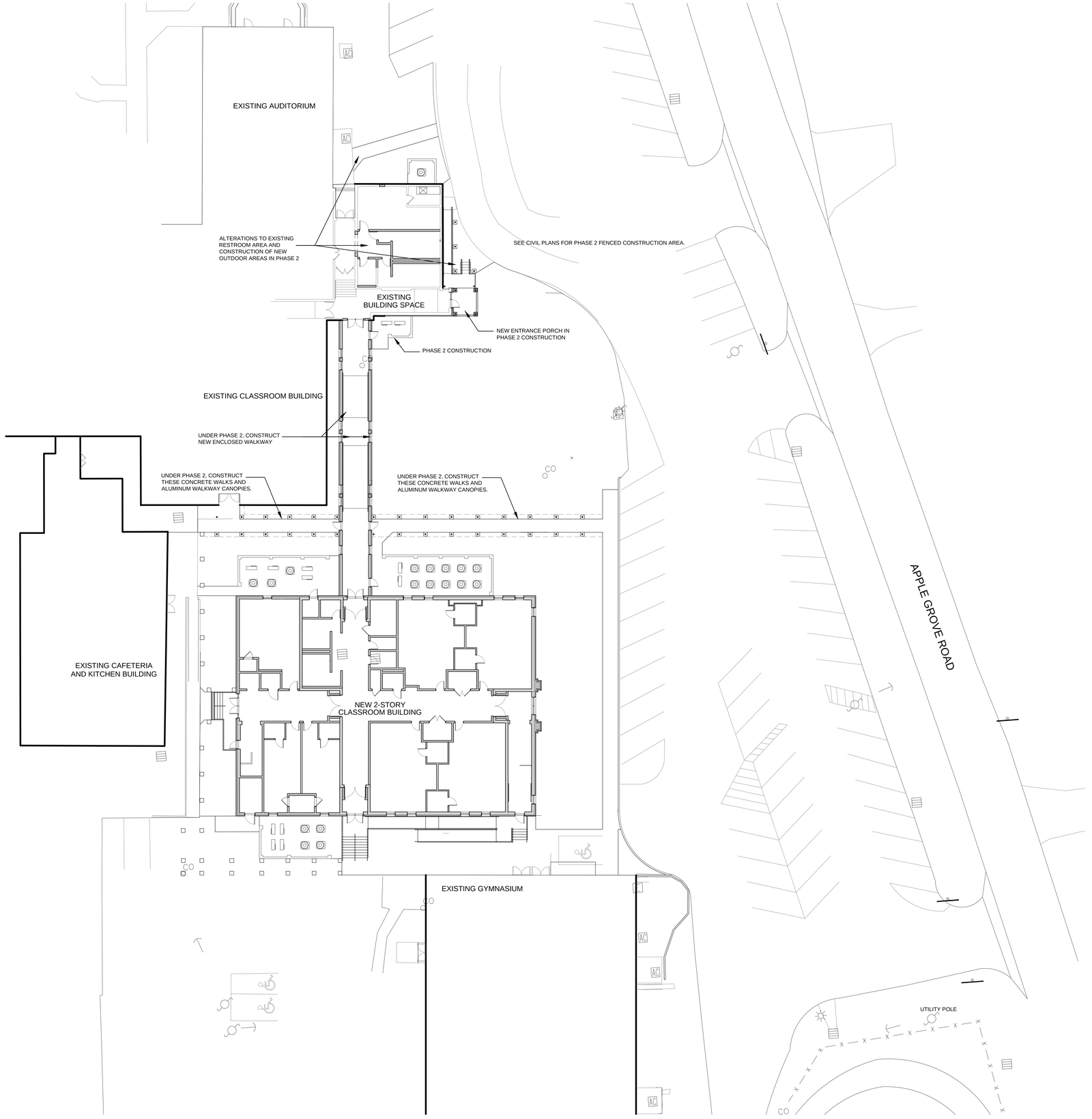

SITE PLAN - PHASE 2 CONSTRUCTION
SCALE: 1/16" = 1'-0"

CLASSROOM ADDITION
FOR
UNION HILL SCHOOL
SOMERVILLE, ALABAMA
FOR THE
MORGAN COUNTY BOARD OF EDUCATION

McKEE and ASSOCIATES
ARCHITECTS, INC.
631 SOUTH HULL STREET , MONTGOMERY , ALABAMA 36104 (334) 834-9933

STATE OF ALABAMA REGISTERED ARCHITECT
WALTER T. MCKEE, JR.
No. 1082
MONTGOMERY, ALA.

SHEET TITLE :	SITE PLAN - PHASE 2 CONSTRUCTON
MCKEE JOB # :	22-134
DRAWN BY :	VH
DATE:	10-13-2022
REVISED DATE:	
REVISED DATE:	
REVISED DATE:	

SHEET NO. : A0.4

- Z:\2022\22-134 Classroom Addition for Union Hill School\CAD Drawings\Architectural\A0.0 Arch Site Plan.dwg
- Friday, October 14, 2022 10:42:16 AM

DEMOLITION PLAN LEGEND

SYMBOL	DESCRIPTION
	EXISTING TO REMAIN
	EXISTING TO BE DEMOLISHED
D1	DEMOLISH EXISTING PARTITION
D2	DEMOLISH EXISTING TOILET FIXTURES, TOILET STALL PARTITIONS, AND RESTROOM ACCESSORIES. SEE PLUMBING DRAWINGS FOR PIPING DEMOLITION.
D3	DEMOLISH EXISTING SINK. SEE PLUMBING.
D4	DEMOLISH EXISTING ELECTRIC WATER COOLER. SEE PLUMBING.
D5	DEMOLISH EXISTING FLOORING AND WALL BASE.
D6	DEMOLISH EXISTING DOOR AND FRAME.
D7	DEMOLISH HUNG CEILING AND HANGING SYSTEM.
D8	DEMOLISH METAL CANOPIES AND RAILINGS.

SITE OF WORK EXAMINATION

THE RESTROOM AREA PLANS WERE COMPILED BY THE ARCHITECT FROM ON-SITE OBSERVATIONS TO INDICATE THE BUILDING ARRANGEMENT.

CONTRACTORS SUBMITTING PROPOSALS FOR THIS WORK SHALL FIRST EXAMINE THE PREMISES AND ALL CONDITIONS THEREIN. ALL PROPOSALS SHALL TAKE INTO CONSIDERATION ALL SUCH CONDITIONS AS MAY AFFECT THE WORK UNDER THIS CONTRACT.

DRAWINGS ARE DIMENSIONED FOR BIDDING PURPOSES ONLY. CONTRACTORS SHALL MEASURE ALL EXISTING WORK AT THE PREMISES AND VERIFY ALL DIMENSIONS NEEDED TO PROPERLY INTERFACE IMPROVEMENTS WITH ALL EXISTING ELEMENTS WHICH ARE TO REMAIN.

FLOOR PLAN LEGEND

SYMBOL	DESCRIPTION
4TB	4'-0" TACK BOARD
AC	ALUMINUM CANOPY - SEE DETAILS ON SHEET A5.1
AHU	AIR HANDLING UNIT (SEE MECHANICAL)
CEP	CONCRETE EQUIPMENT PAD (SEE DETAIL ON SHT. A9.1)
CR	CARD READER WALL BOX WITH CONDUITS - SEE ELECTRICAL. CARD READER BY OWNER (N.I.C.)
CU	CONDENSING UNIT (SEE MECHANICAL)
DSB	PREFINISHED METAL DOWNSPOUT TO BOOT
DS/SB	PREFINISHED METAL DOWNSPOUT TO SPLASHBLOCK
EWC	ELECTRIC WATER COOLER (SEE DETAIL ON SHT A9.1)
FEC	FIRE EXTINGUISHER CABINET (SEE DETAIL ON SHEET A9.1)
GR	METAL GUARDRAIL - SEE DETAIL ON SHEET A9.2
GR/HR	METAL GUARDRAIL WITH HANDRAIL, AT STEPS OR RAMP - SEE DETAILS ON SHEETS A9.2 AND A9.3
HRS	METAL HANDRAIL AT STEPS - SEE DETAIL, SHEET A9.3
IB	INTERACTIVE BOARD (BY OWNER)
MO	MASONRY OPENING 7'-4" HIGH
RAG	RETURN AIR GRILLE (SEE MECHANICAL)
SC -	STUDENT CUBBIES & NUMBER OF MODULES - SEE DETAIL 1/A10.1
SW	SCREEN WALL - SEE DETAILS ON SHEET A9.1
TC	TEACHER'S CABINET - SEE SHEET A10.1
TCS	TEACHER'S CABINET - SINGLE MODULE
TD	TEACHER'S DESK - SEE SHEET A10.1
VG	VENTILATION AIR GRILLE - 24"X24"
WHR WHS	WALL MOUNTED HANDRAIL AT RAMP OR STEPS - SEE DETAILS ON SHEETS A9.2 AND A9.3
XMB	X'-0" MARKER BOARD

FLOOR PLAN LEGEND

SYMBOL	DESCRIPTION
A---	SCHEDULED DOOR AND FRAME
A	SCHEDULED WINDOW UNIT
CORRIDOR ---	SCHEDULED ROOM NAME AND NUMBER
- AX.X	SECTION / DETAIL SYMBOL
- AX.X	BUILDING SECTION SYMBOL
X AX.X X	INTERIOR ELEVATION SYMBOL
1 1	1 HOUR FIRE RATED PARTITION - SEE SECTION A/G1.1
2 2	2 HOUR FIRE RATED PARTITION - SEE SECTION B/G1.1
P-	WALL PARTITION TYPE - SEE SCHEDULE ON SHEET A1.2.

SEE "EXISTING RESTROOM AREA" PLANS ON THIS SHEET FOR WORK IN THIS AREA.

EXTEND NEW ALUMINUM CANOPIES INTO THIS AREA BETWEEN THE EXISTING BUILDING WALLS.

PLAN NOTES:

1. NEW INTERIOR PARTITIONS ON THESE FLOOR PLANS ARE TO BE TYPE "P1", EXCEPT WHERE INDICATED ON THE PLAN BY A PARTITION TYPE SYMBOL.

REMOVE EXISTING AIR CONDITIONER IN WALL OPENING. DELIVER TO OWNER.

EXISTING AUDITORIUM

EXISTING CORRIDOR

DOWN

EXISTING STAIRS AND RAILING (NO WORK)

EXISTING HALLWAY

EXISTING HALLWAY

DEMOLISH EXISTING CLASSROOM BUILDING

DEMOLISH EXISTING CLASSROOM BUILDING

SEE CIVIL FOR OTHER DEMOLITION TO CANOPIES AND CONCRETE WALKS.

DEMOLITION PLAN - EXISTING RESTROOM AREA

SCALE: 1/8" = 1'-0"

EXISTING RAILINGS TO REMAIN

EXISTING KITCHEN AND CAFETERIA BUILDING

EXISTING HALLWAY

EXISTING CLASSROOM BUILDING

ENCLOSED WALKWAY 123

RAMP UP

EXISTING LIBRARY SPACE

RAMP UP

RAMP UP

ENCLOSED WALKWAY 123

TEMPORARY CLOSURE: PROVIDE INSULATED METAL STUD AND DRYWALL CLOSURE WALL, VINYL SIDING, AND SECURE DOOR AT THE END OF PHASE 1 DEMOLITION. WALL OPENING WILL BE APPROXIMATELY 10' WIDE AND 9'-4" TALL.

CLASSROOM BUILDING TO BE DEMOLISHED IN PHASE 1

CLOSE EXISTING WALL OPENING WITH MATCHING BRICK AND CMU.

EXISTING AUDITORIUM

EXISTING CORRIDOR

NEW MASONRY OPENING, 7'-0" WIDE, 8'-0" HIGH

EXISTING STAIRS AND RAILING (NO WORK)

EXISTING HALLWAY

EXISTING HALLWAY

NEW BRICK VENEER OVER EXISTING BLOCK WALL, AS NEEDED

ENCLOSED WALKWAY 123

NEW BRICK VENEER WITH INSULATION BOARD IN AIR CAVITY

ALUMINUM CANOPY COLUMN WITH 16" SQUARE BRICK WRAP, TYPICAL ALL 4 COLUMNS

LINES OF ALUMINUM CANOPY ROOF OVERHANG

EDGES OF ALUM. CANOPIES ABOVE

EXISTING GYMNASIUM BUILDING

113'-4" TO BLOCK

114'-6" TO BRICK

NEW WORK FLOOR PLAN - EXISTING RESTROOM AREA

SCALE: 1/8" = 1'-0"

NEW CLASSROOM BUILDING - FIRST FLOOR PLAN

SCALE: 1/8" = 1'-0"

CLASSROOM ADDITION
FOR
UNION HILL SCHOOL
SOMERVILLE, ALABAMA
FOR THE
MORGAN COUNTY BOARD OF EDUCATION

McKEE and ASSOCIATES
ARCHITECTS, INC.
631 SOUTH HULL STREET, MONTGOMERY, ALABAMA 36104 (334) 834-9833

STATE OF ALABAMA REGISTERED ARCHITECT WALTER T. MCKEE, JR. NO. 1082 MONTGOMERY, ALA.

SHEET TITLE : FIRST FLOOR PLAN AND EXISTING RESTROOM AREA PLANS

MCKEE JOB # : 22-134

DRAWN BY : VH

DATE: 10-13-2022

REVISED DATE:

REVISED DATE:

REVISED DATE:

SHEET NO. : A1.1

- Z:\2022\22-134 Classroom Addition for Union Hill School\CAD Drawings\Architectural\A1.1 Floor Plans.dwg
- Friday, October 14, 2022 10:20:28 AM

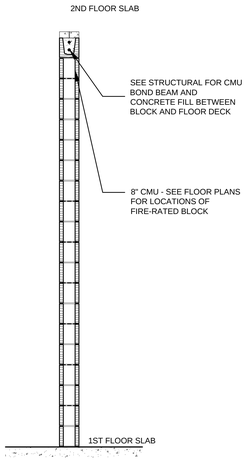

P1 BLOCK - 1ST FLOOR
SCALE: 1/2"=1'-0"

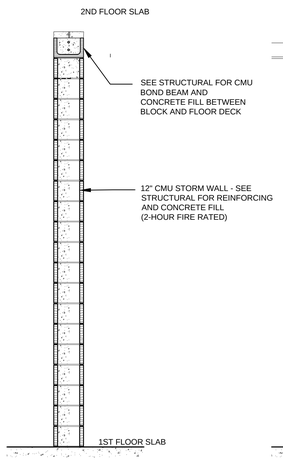

P2 STORM
SCALE: 1/2"=1'-0"

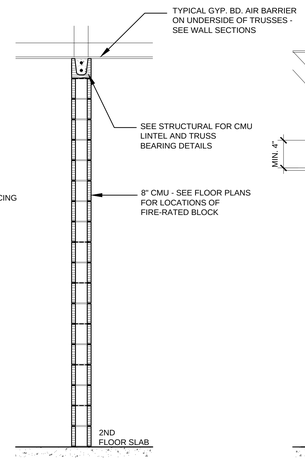

P3 BLOCK - 2ND FLOOR
SCALE: 1/2"=1'-0"

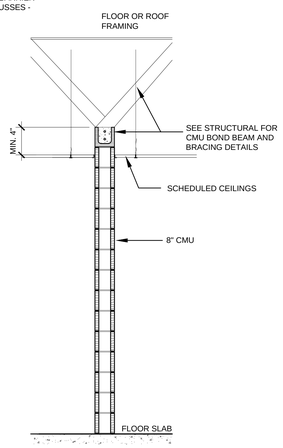

P4 BLOCK
SCALE: 1/2"=1'-0"

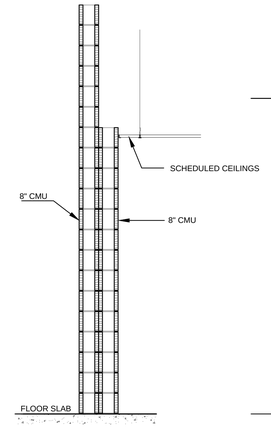

P5 BLOCK
SCALE: 1/2"=1'-0"

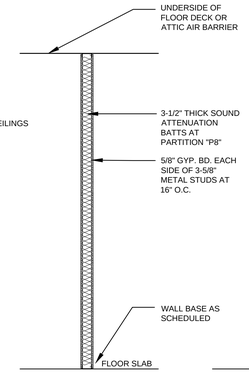

P6 P8 STUD
SCALE: 1/2"=1'-0"

P6 - NO SOUND BATTS
P8 - WITH SOUND ATTENUATION BATTS

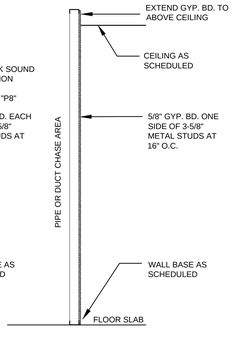

P7 CHASE WALL
SCALE: 1/2"=1'-0"

PARTITION TYPES SCHEDULE

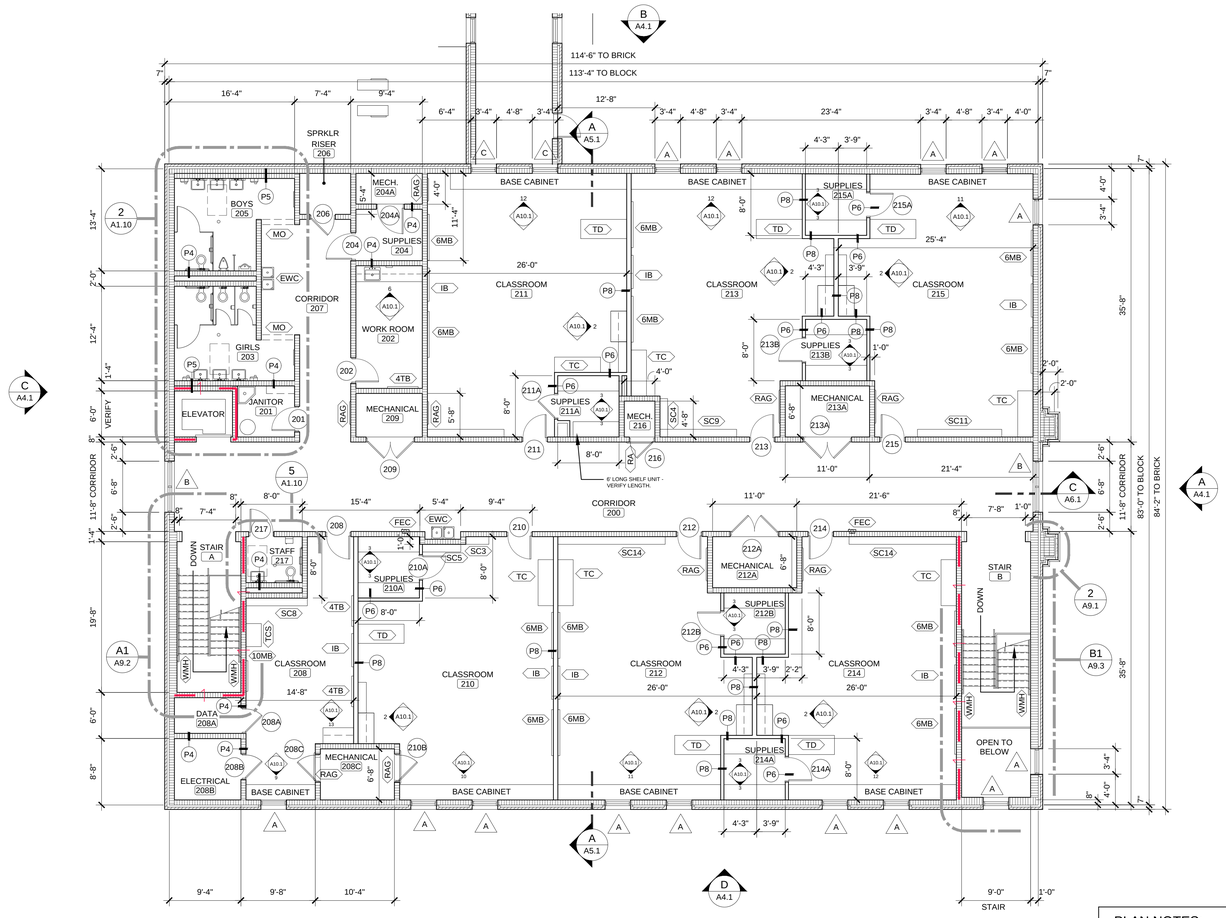

SECOND FLOOR PLAN
SCALE: 1/8" = 1'-0"

PLAN NOTES:

1. PARTITIONS ON THIS FLOOR ARE TO BE TYPE "P3", EXCEPT WHERE INDICATED ON THE PLAN BY A PARTITION TYPE.

FLOOR PLAN LEGEND

SYMBOL	DESCRIPTION
---	SCHEDULED DOOR AND FRAME
-	SCHEDULED WINDOW UNIT
CORRIDOR ---	SCHEDULED ROOM NAME AND NUMBER
- AX.X	SECTION / DETAIL SYMBOL
- AX.X	BUILDING SECTION SYMBOL
X AX.X X X	INTERIOR ELEVATION SYMBOL
1 1	1 HOUR FIRE RATED PARTITION - SEE SECTION A/G1.1
2 2	2 HOUR FIRE RATED PARTITION - SEE SECTION B/G1.1
P-	WALL PARTITION TYPE - SEE SCHEDULE ON THIS SHEET.
4TB	4'-0" TACK BOARD
DSB	PREFINISHED METAL DOWNSPOUT TO BOOT
DS/SB	PREFINISHED METAL DOWNSPOUT TO SPLASHBLOCK
EWC	ELECTRIC WATER COOLER (SEE DETAIL A9.1)
FEC	FIRE EXTINGUISHER CABINET (SEE DETAIL A9.1)
IB	INTERACTIVE BOARD (BY OWNER)
MO	MASONRY OPENING 7'-4" HIGH
RAG	RETURN AIR GRILLE (SEE MECHANICAL)
SC	STUDENT CUBBIES & NUMBER OF MODULES - SEE DETAIL 1/A10.1.
TC	TEACHER'S CABINET - SEE SHEET A10.1.
TD	TEACHER'S DESK - SEE SHEET A10.1.
WMH	WALL MOUNTED HANDRAILS, SEE SHEET A9.3
XMB	X'-0" LONG MARKER BOARD

CLASSROOM ADDITION
FOR
UNION HILL SCHOOL
SOMERVILLE, ALABAMA
FOR THE
MORGAN COUNTY BOARD OF EDUCATION

McKEE and ASSOCIATES
ARCHITECTS, INC.
631 SOUTH HULL STREET, MONTGOMERY, ALABAMA 36104 (334) 834-9833

STATE OF ALABAMA — WALTER T. MCKEE, JR. — NO. 10262 — MONTGOMERY, ALA. — REGISTERED ARCHITECT

SHEET TITLE : SECOND FLOOR PLAN AND PARTITIONS TYPES SCHEDULE

MCKEE JOB # : 22-134

DRAWN BY : VH, JL

DATE: 10-13-2022

REVISED DATE:

REVISED DATE:

REVISED DATE:

SHEET NO. : A1.2

- Z:\2022\22-134 Classroom Addition for Union Hill School\CAD Drawings\Architectural\A1.1 Floor Plans.dwg
- Friday, October 14, 2022 10:20:51 AM

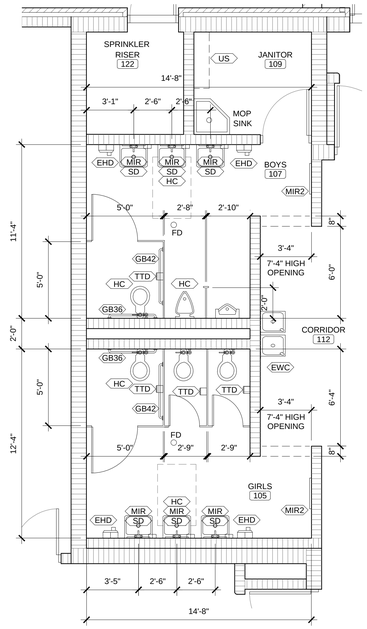

1ST FLOOR
ENLARGED RESTROOMS PLAN
SCALE: 1/4" = 1'-0"

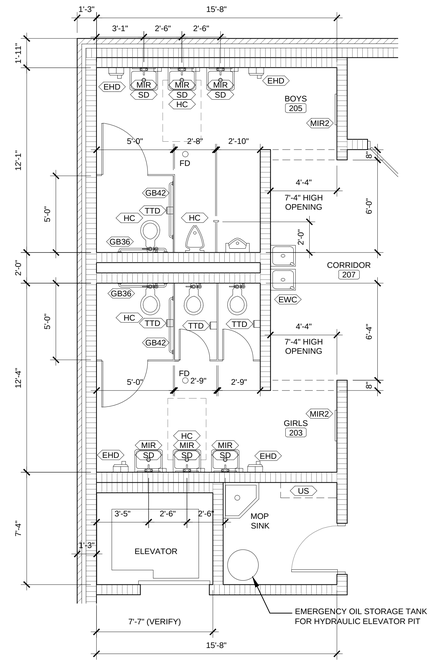

2ND FLOOR
ENLARGED RESTROOMS PLAN
SCALE: 1/4" = 1'-0"

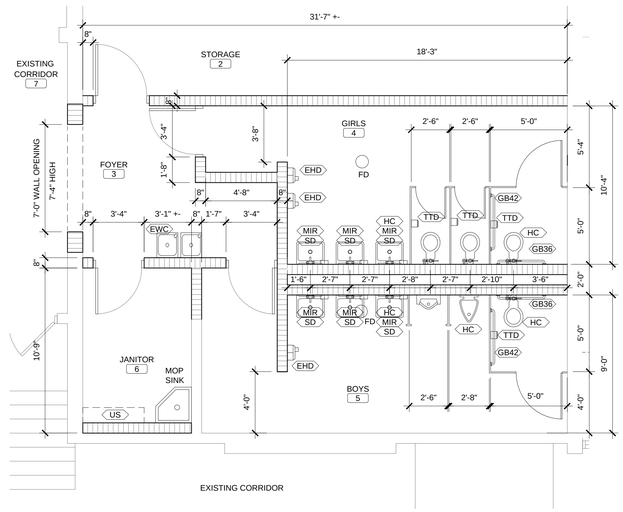

3 ENLARGED PLAN - EXISTING RESTROOM AREA
SCALE: 1/4" = 1'-0"

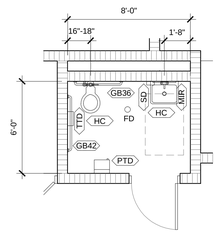

4 ENLARGED PLAN - STAFF 115
SCALE: 1/4" = 1'-0"

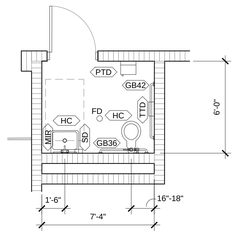

5 ENLARGED PLAN - STAFF 217
SCALE: 1/4" = 1'-0"

TOILET ACCESSORIES LEGEND

KEYNOTE	DESCRIPTION
EHD	ELECTRIC HAND DRYER TO BE MOUNTED WITH CONTROL SWITCH AT 48" AFF (SEE SPECS)
GB36	36" GRAB BAR MOUNTED WHERE CENTERLINE OF WALL MOUNT IS 6" OUT FROM CORNER OF WALL OR TOILET PARTITION AND IS TO BE 33"-36" AFF (SEE SPECS)
GB42	42" GRAB BAR MOUNTED WHERE CENTERLINE OF WALL MOUNT IS 12" OUT FROM CORNER OF WALL / TOILET PARTITION AND IS TO BE 33"-36" AFF (SEE SPECS)
HC	HANDICAPPED ACCESSIBLE TOILET / URINAL TO BE MOUNTED 17" AFF
MIR	18" X 36" MIRROR WITH SHELF TO BE MOUNTED WITH THE BOTTOM EDGE 35" AFF AND THE TOP EDGE 71" AFF (SEE SPECS)
MIR2	24" X 48" MIRROR WITH THE TOP EDGE AT 76" AFF (SEE SPECS)
PTD	PAPER TOWEL DISPENSER TO BE MOUNTED 48" OC AFF (SEE SPECS)
SD	SOAP DISPENSER TO BE MOUNTED WHERE HAND CONTROLS ARE 48" OC AFF
TTD	TOILET TISSUE DISPENSER TO BE MOUNTED 8" OC IN FRONT OF THE WATER CLOSET. THE OUTLET OF THE DISPENSER MUST BE BETWEEN 15" & 48" AFF.
US	UTILITY SHELF WITH MOP RACK

THESE ITEMS WILL BE PROVIDED BY THE OWNER FOR THE CONTRACTOR TO INSTALL:
1. SOAP DISPENSERS
2. TOILET TISSUE DISPENSERS
3. PAPER TOWEL DISPENSERS

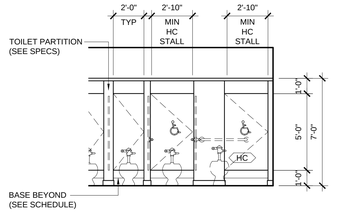

TYPICAL TOILET SCREEN PARTITION ELEVATION
SCALE: 1/4" - 1'-0"

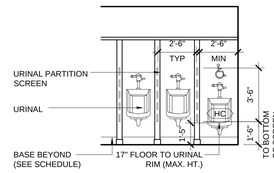

TYPICAL URINAL SCREEN PARTITION ELEVATION
SCALE: 1/4" - 1'-0"

CLASSROOM ADDITION
FOR
UNION HILL SCHOOL
SOMERVILLE, ALABAMA
FOR THE
MORGAN COUNTY BOARD OF EDUCATION

McKEE and ASSOCIATES
ARCHITECTS
631 SOUTH HULL STREET , MONTGOMERY , ALABAMA 36104 (334) 834-9933

STATE OF ALABAMA
WALTER T. MCKEE, JR.
No. 10082
MONTGOMERY, ALA.
REGISTERED ARCHITECT

SHEET TITLE : ENLARGED PLANS AND DETAILS

MCKEE JOB # : 22-134

DRAWN BY : JL, VH

DATE: 10-13-2022

REVISED DATE:

REVISED DATE:

REVISED DATE:

SHEET NO. : A1.10

- Z:\2022\22-134 Classroom Addition for Union Hill School\CAD Drawings\Architectural\A1.10 Enlarged Plans.dwg
- Friday, October 14, 2022 10:21:03 AM

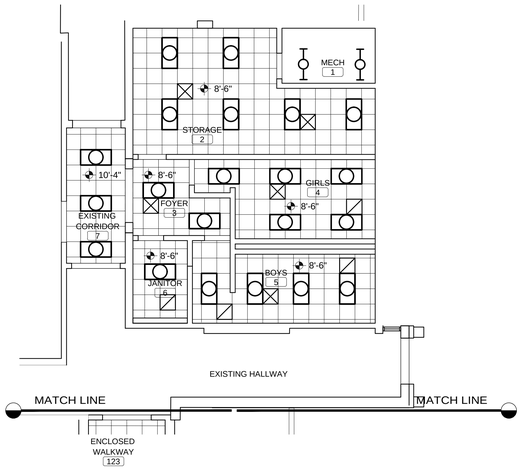

REFLECTED CEILING PLAN - EXISTING RESTROOM AREA

SCALE: 1/8" = 1'-0"

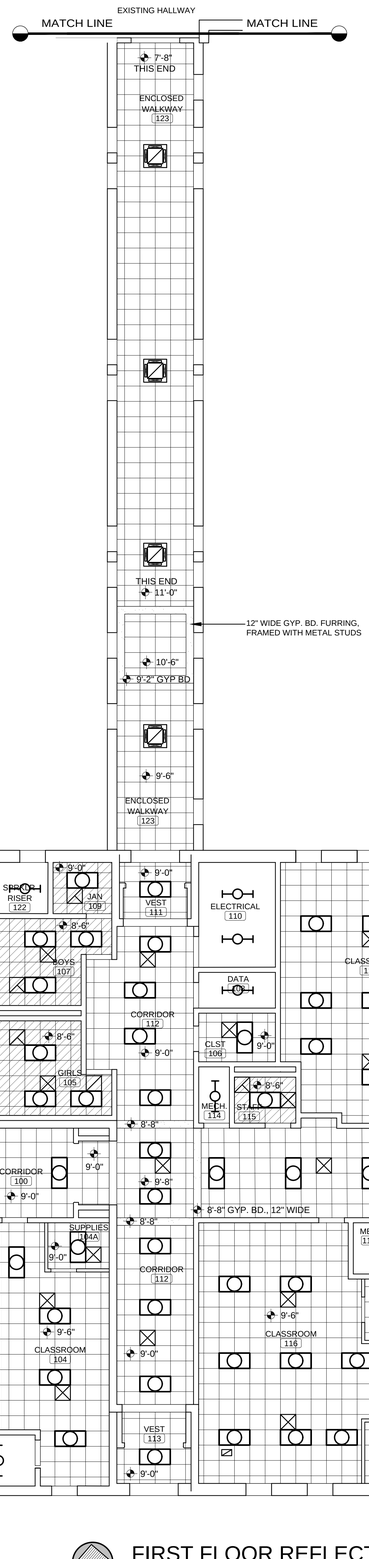

REFLECTED CEILING PLAN LEGEND

SYMBOL	DESCRIPTION
0'-0"	HEIGHT ABOVE FINISHED FLOOR ELEVATION
	2'x2' LAY-IN ACOUSTICAL CEILING
	2'x2' VINYL CLAD LAY-IN ACOUSTICAL CEILING
	GYPSUM BOARD (SUSPENDED AS REQUIRED)
	METAL SOFFIT PANELS (SUSPENDED AS REQUIRED)
	2'x4' RECESSED OR SURFACE MOUNTED LIGHT FIXTURE (SEE ELECTRICAL)
	2'x2' RECESSED OR SURFACE MOUNTED LIGHT FIXTURE (SEE ELECTRICAL)
	1'x4' RECESSED OR SURFACE MOUNTED LIGHT FIXTURE (SEE ELECTRICAL)
	1'x4' SURFACE MOUNTED LIGHT FIXTURE (SEE ELECTRICAL)
	RECESSED ROUND LIGHT FIXTURE (SEE ELECTRICAL)
	HVAC SUPPLY AIR GRILLE (SEE MECHANICAL)
	HVAC RETURN AIR GRILLE (SEE MECHANICAL)
	EXHAUST FAN GRILLE (SEE MECHANICAL)
	CASSETTE HEAT PUMP (SEE MECHANICAL)
AAD	ATTIC ACCESS DOOR IN DRYWALL AIR BARRIER ON UNDERSIDE OF ROOF TRUSSES. PROVIDE 2X4 LAY-IN CEILING TILE BENEATH ACCESS DOOR TO ALLOW ACCESS FROM THE FLOOR.
ESP	EXPOSED STRUCTURE - PAINT
ES	EXPOSED STRUCTURE - NO PAINT
NWR	NO WORK REQUIRED
GB	GYPSUM BOARD - NO PAINT
GBF	GYPSUM BOARD FURRING
GBP	GYPSUM BOARD - PAINT

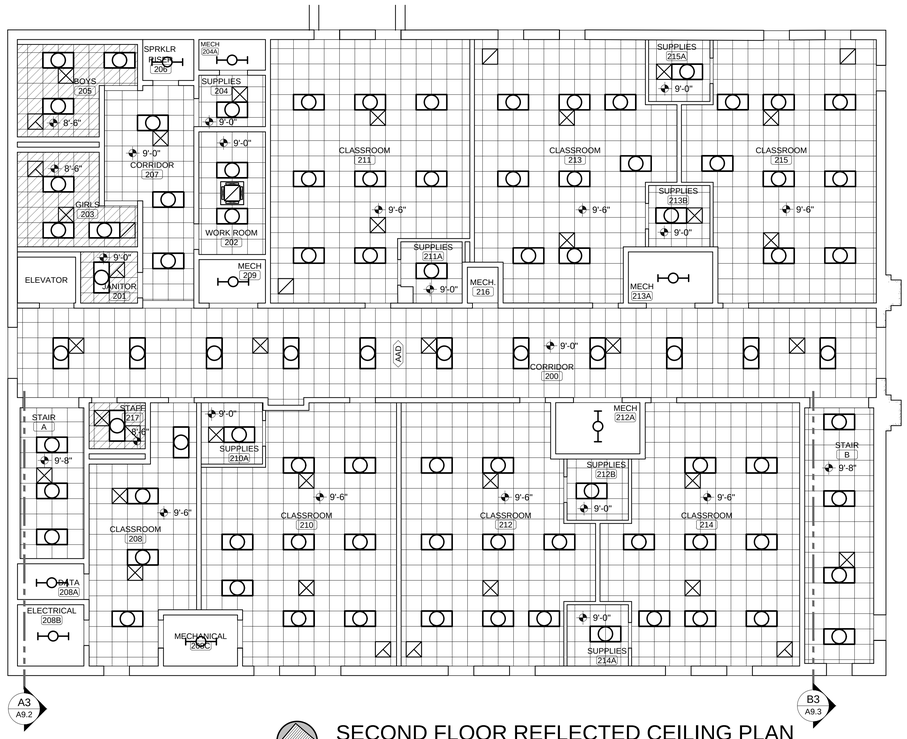

SECOND FLOOR REFLECTED CEILING PLAN

SCALE: 1/8" = 1'-0"

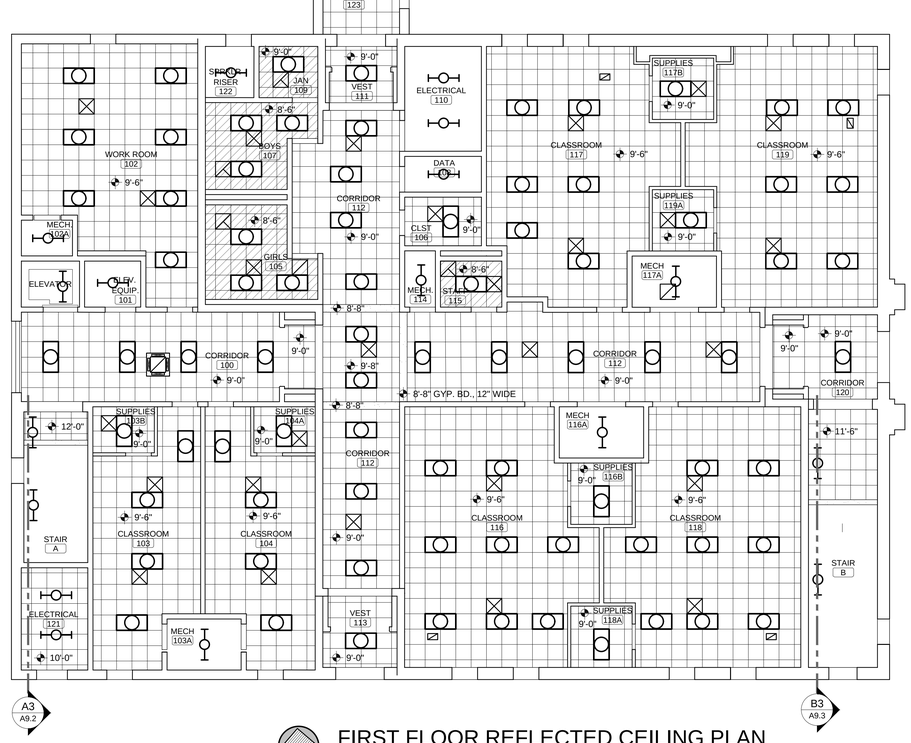

FIRST FLOOR REFLECTED CEILING PLAN

SCALE: 1/8" = 1'-0"

CLASSROOM ADDITION
FOR
UNION HILL SCHOOL
SOMERVILLE, ALABAMA
FOR THE
MORGAN COUNTY BOARD OF EDUCATION

McKEE and ASSOCIATES
ARCHITECTS, INC.
631 SOUTH HULL STREET, MONTGOMERY, ALABAMA 36104 (334) 834-9833

STATE OF ALABAMA REGISTERED ARCHITECT
WALTER T. McKEE, JR.
No. 1882
MONTGOMERY, ALA.

SHEET TITLE : REFLECTED CEILING PLANS

MCKEE JOB # : 22-134

DRAWN BY : VH

DATE: 10-13-2022

REVISED DATE:

REVISED DATE:

REVISED DATE:

SHEET NO. : A2.1

- Z:\2022\22-134 Classroom Addition for Union Hill School\CAD Drawings\Architectural\A2.1 RCP Plans.dwg
- Friday, October 14, 2022 10:21:05 AM

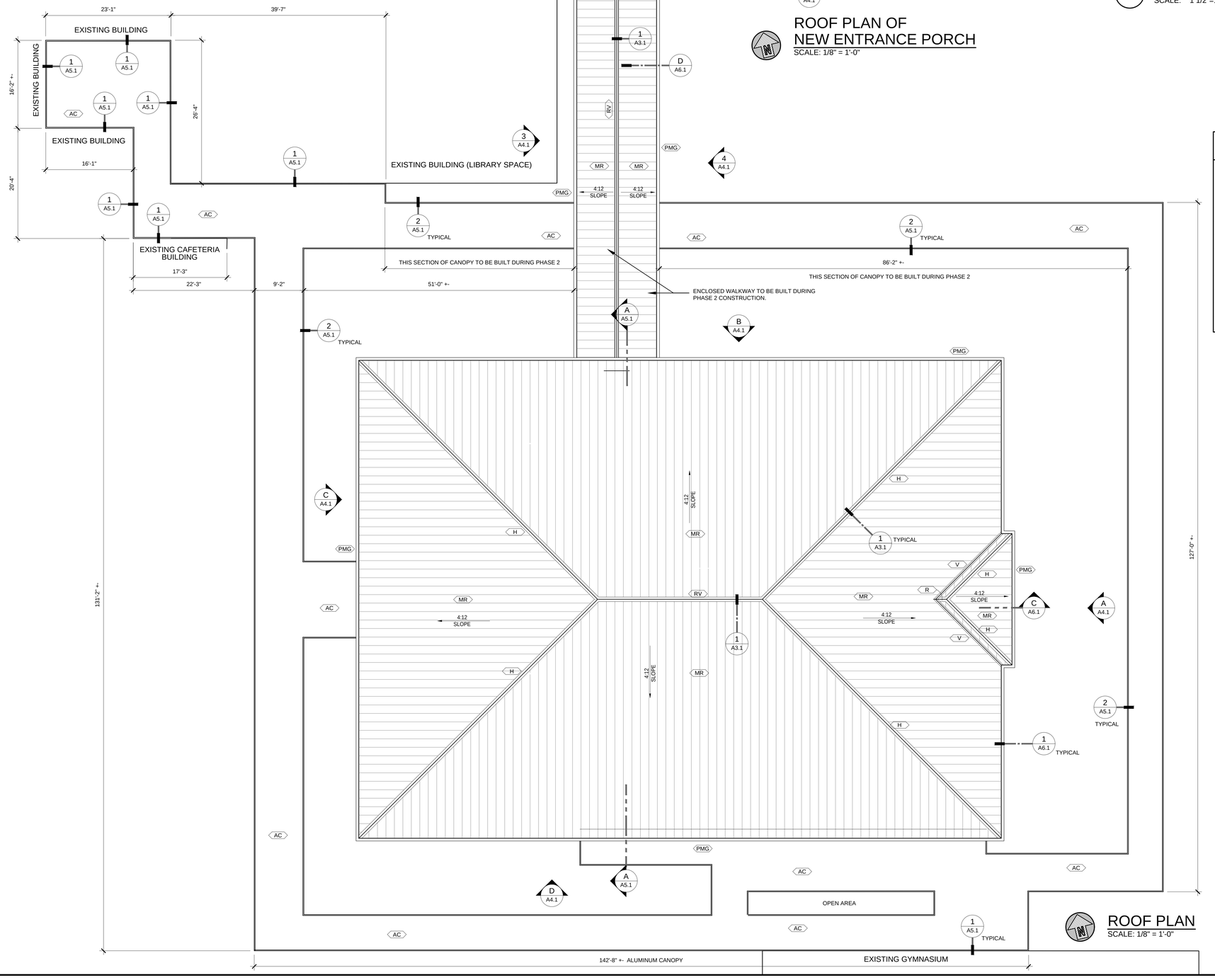

ROOF PLAN
SCALE: 1/8" = 1'-0"

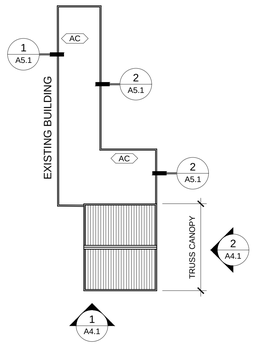

ROOF PLAN OF NEW ENTRANCE PORCH
SCALE: 1/8" = 1'-0"

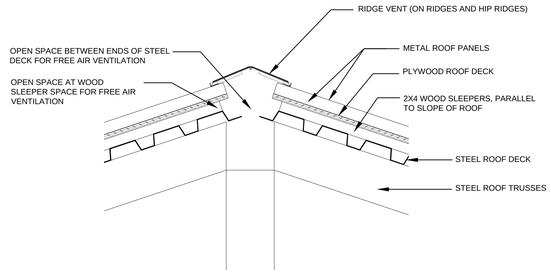

1 ROOF VENT DETAIL
SCALE: 1 1/2"=1'-0"

ROOF PLAN LEGEND

SYMBOL	DESCRIPTION
X / A3.X	DETAIL SYMBOL
AC	ALUMINUM CANOPY
H	HIP RIDGE - VENTED
PME	PREFINISHED METAL EAVE TRIM
PMF	PREFINISHED METAL FASCIA
PMG	PREFINISHED METAL GUTTER
MR	METAL ROOF SYSTEM
RV	RIDGE VENT
V	VALLEY

CLASSROOM ADDITION
FOR
UNION HILL SCHOOL
SOMERVILLE, ALABAMA
FOR THE
MORGAN COUNTY BOARD OF EDUCATION

McKEE and ASSOCIATES
ARCHITECTS, INC.
631 SOUTH HULL STREET , MONTGOMERY , ALABAMA 36104 (334) 834-9933

STATE OF ALABAMA
WALTER T. McKEE, JR.
No. 10866
MONTGOMERY, ALA.
REGISTERED ARCHITECT

SHEET TITLE : ROOF PLAN

MCKEE JOB # : 22-134

DRAWN BY : VH

DATE: 10-13-2022

REVISED DATE:

REVISED DATE:

REVISED DATE:

SHEET NO. : A3.1

- Z:\2022\22-134 Classroom Addition for Union Hill School\CAD Drawings\Architectural\A3.1 Roof Plan.dwg
- Friday, October 14, 2022 10:20:32 AM

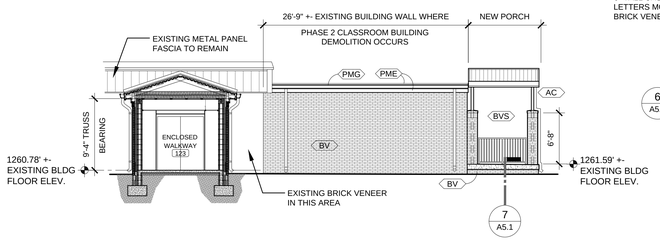

1 EXISTING BUILDING - SOUTH ELEVATION
SCALE: 1/8" = 1'-0"

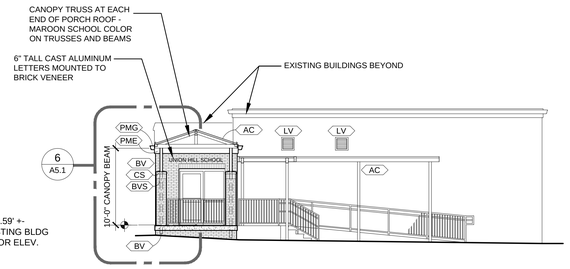

2 EXISTING BUILDING - EAST ELEVATION
SCALE: 1/8" = 1'-0"

LEGEND AND SYMBOLS	
SYMBOL	DESCRIPTION
X AX.X	BUILDING SECTION SYMBOL
AC	ALUMINUM CANOPY
BV	BRICK VENEER
BVR	BRICK VENEER - ROWLOCK COURSE
BVS	BRICK VENEER - SOLDIER COURSE
CS	CAST STONE
DS	PREFINISHED METAL DOWNSPOUT
OS/SB	PREFINISHED METAL DOWNSPOUT TO SPLASHBLOCK
LV	LOUVER (SEE MECHANICAL FOR SIZE)
MCJ	MASONRY CONTROL JOINT LOCATIONS
MR	METAL ROOFING SYSTEM
PMG	PREFINISHED METAL GUTTER
PME	PREFINISHED METAL EAVE TRIM
RV	RIDGE VENT

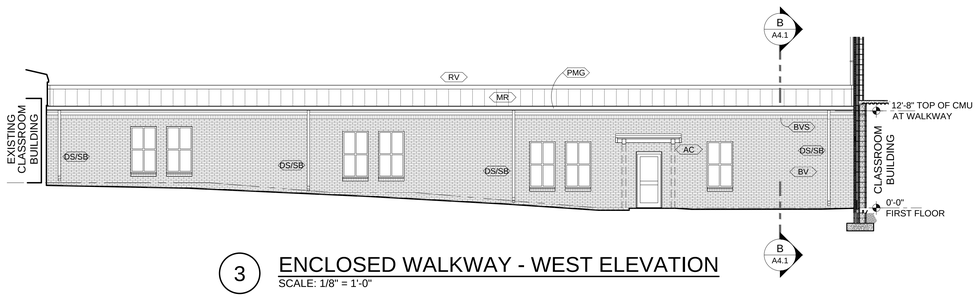

3 ENCLOSED WALKWAY - WEST ELEVATION
SCALE: 1/8" = 1'-0"



4 ENCLOSED WALKWAY - EAST ELEVATION
SCALE: 1/8" = 1'-0"

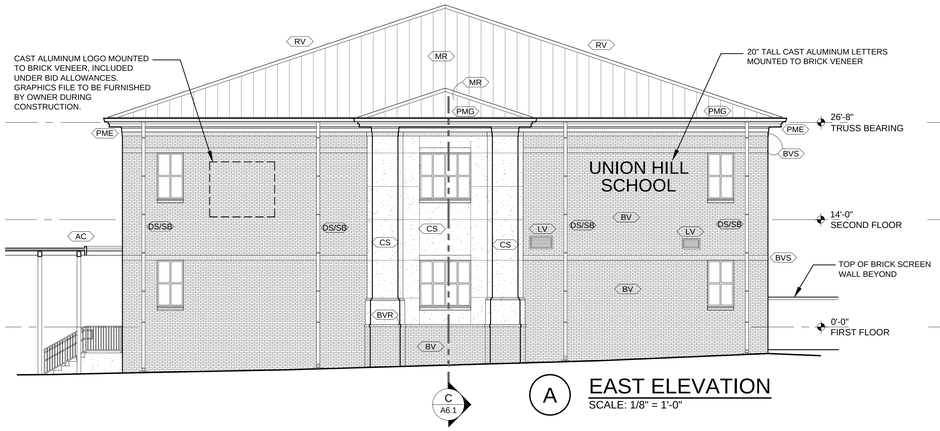

A EAST ELEVATION
SCALE: 1/8" = 1'-0"

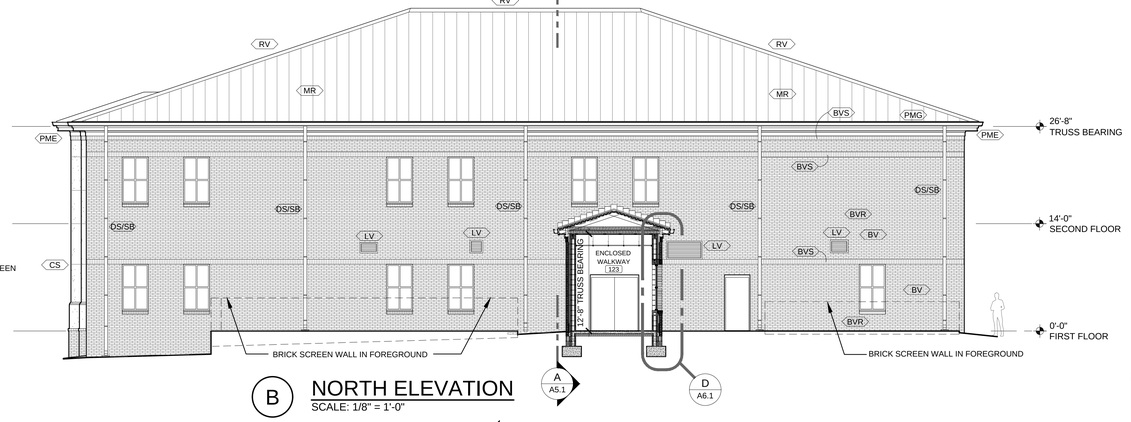

B NORTH ELEVATION
SCALE: 1/8" = 1'-0"



C WEST ELEVATION
SCALE: 1/8" = 1'-0"

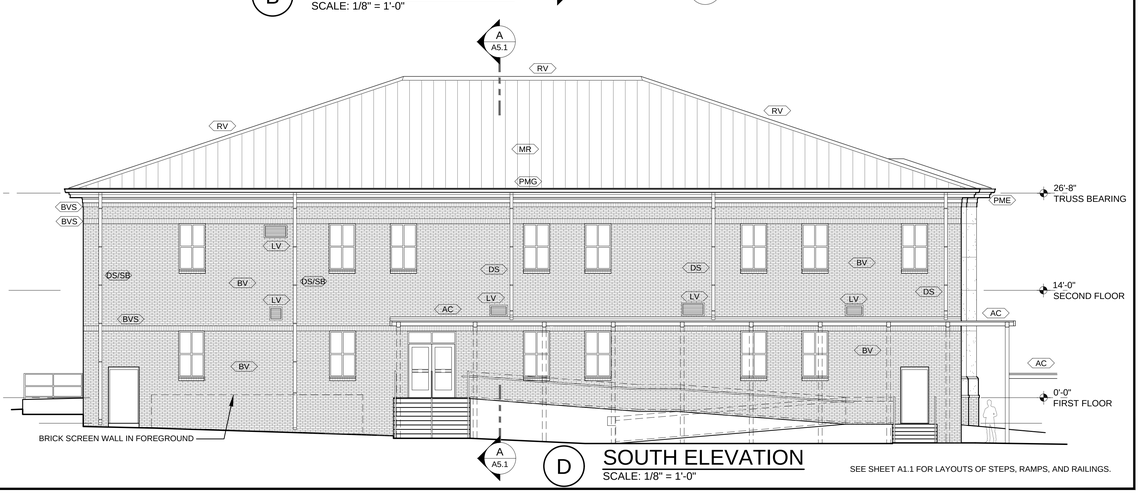

D SOUTH ELEVATION
SCALE: 1/8" = 1'-0"

SEE SHEET A1.1 FOR LAYOUTS OF STEPS, RAMPS, AND RAILINGS.

CLASSROOM ADDITION
FOR
UNION HILL SCHOOL
SOMERVILLE, ALABAMA
FOR THE
MORGAN COUNTY BOARD OF EDUCATION

McKEE and ASSOCIATES
ARCHITECTS, INC.
631 SOUTH HULL STREET, MONTGOMERY, ALABAMA 36104 (334) 834-9933

STATE OF ALABAMA REGISTERED ARCHITECT
WALTER T. McKEE, JR.
No. 1882
MONTGOMERY, ALA.

SHEET TITLE : EXTERIOR ELEVATIONS

MCKEE JOB # : 22-134

DRAWN BY : VH

DATE: 10-13-2022

REVISED DATE:

REVISED DATE:

REVISED DATE:

SHEET NO. : A4.1

- Z:\2022\22-134 Classroom Addition for Union Hill School\CAD Drawings\Architectural\A4.1 Exterior Elevations.dwg
- Friday, October 14, 2022 10:20:49 AM

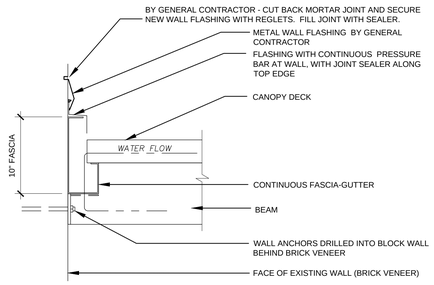

1 WALKWAY CANOPY AT WALL
SCALE: 1-1/2" = 1'-0"

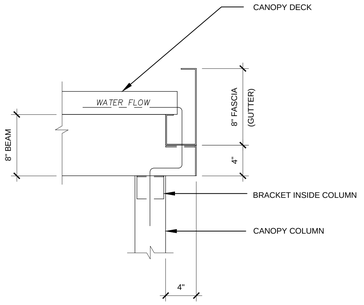

2 WALKWAY CANOPY FASCIA
SCALE: 1-1/2" = 1'-0"

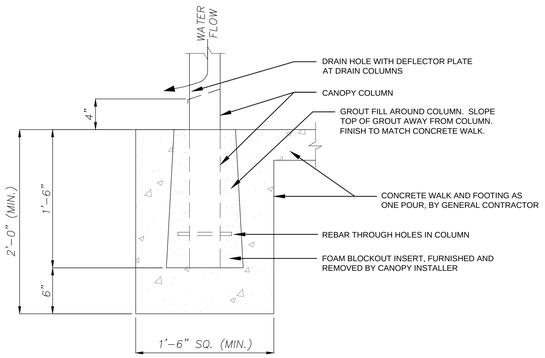

3 IN NEW CONCRETE AREAS - WALKWAY CANOPY COLUMN DETAIL
SCALE: 1-1/2" = 1'-0"

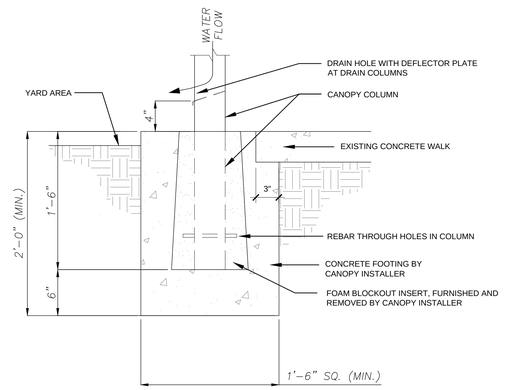

4 ALONGSIDE EXISTING SIDEWALK - WALKWAY CANOPY COLUMN DETAIL
SCALE: 1-1/2" = 1'-0"
ADJACENT TO (ALONG THE SIDE OF) CONCRETE WALKS IS A SIMILAR DETAIL.

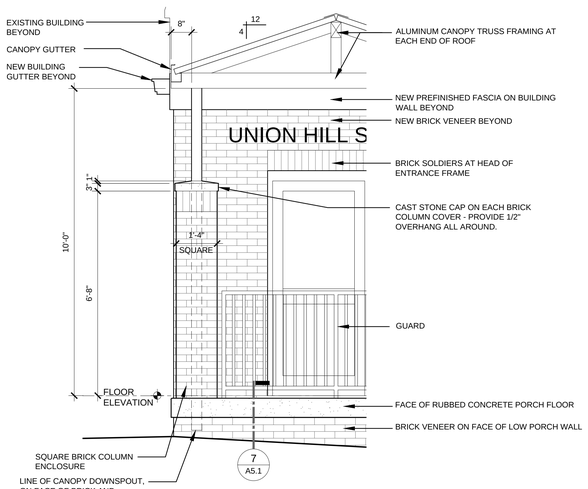

6 ENTRANCE PORCH ELEVATION DETAIL
SCALE: 1"=1'-0"

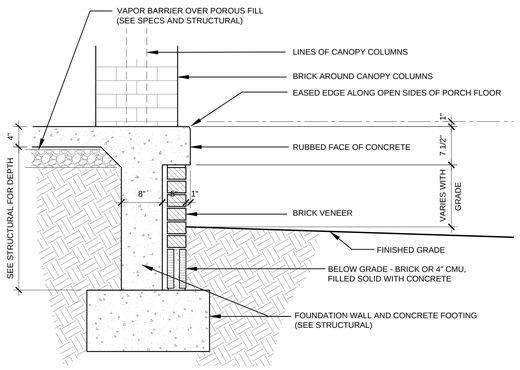

7 ENTRANCE PORCH EDGE SECTION
SCALE: 1"=1'-0"

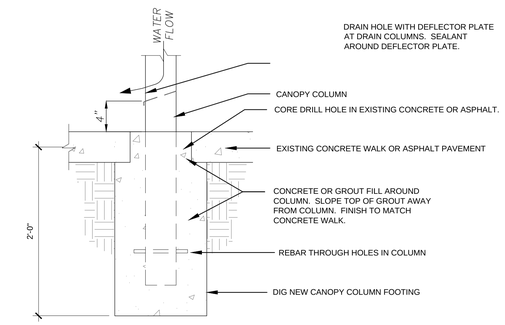

5 IN EXISTING PAVEMENT - WALKWAY CANOPY COLUMN DETAIL
SCALE: 1-1/2" = 1'-0"

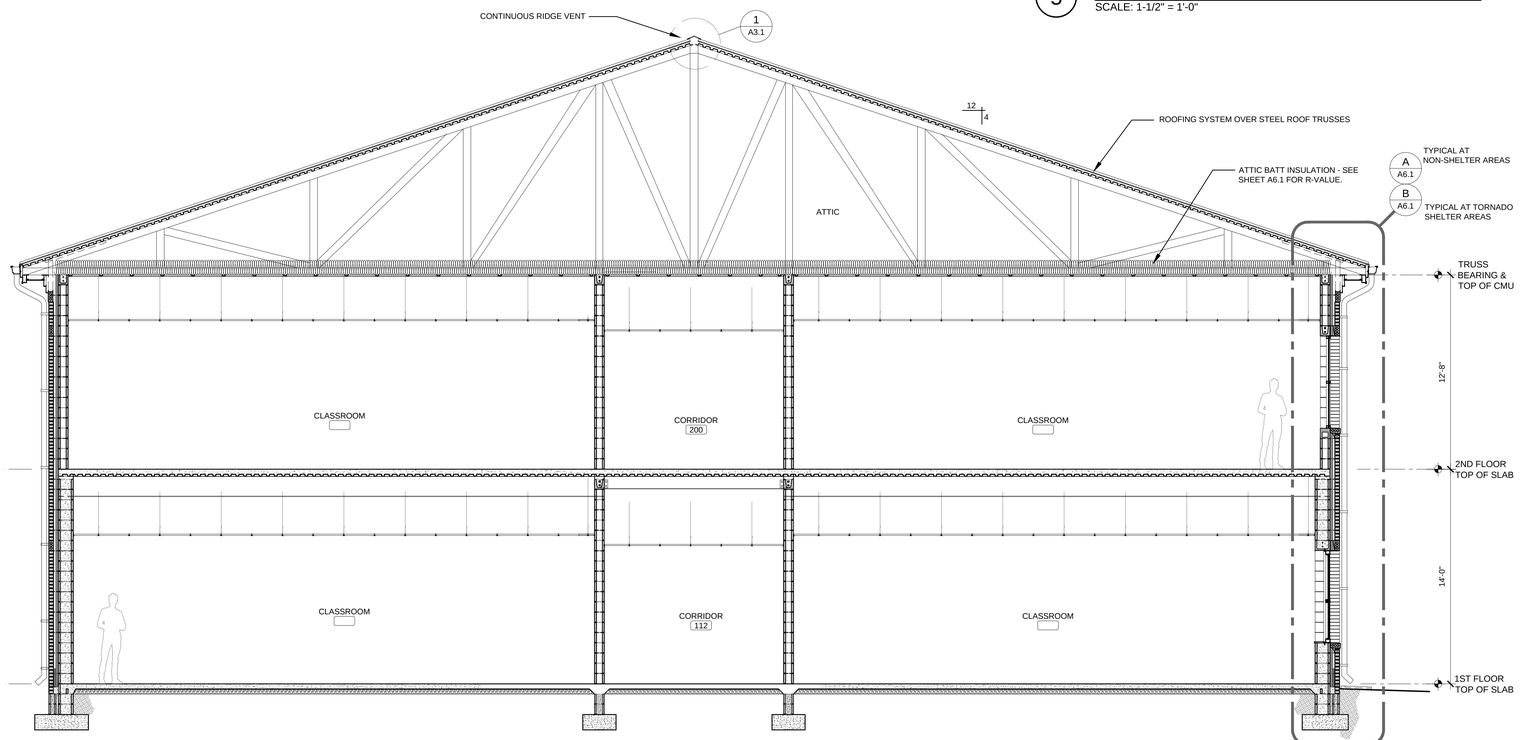

A TYPICAL BUILDING SECTION
SCALE: 1/4" = 1'-0"

CLASSROOM ADDITION
FOR
UNION HILL SCHOOL
SOMERVILLE, ALABAMA
FOR THE
MORGAN COUNTY BOARD OF EDUCATION

McKEE and ASSOCIATES
ARCHITECTS, INC.
631 SOUTH HULL STREET, MONTGOMERY, ALABAMA 36104 (334) 834-9833

STATE OF ALABAMA REGISTERED ARCHITECT
WALTER T. McKEE, JR.
No. 1882
MONTGOMERY, ALA.

SHEET TITLE :	BUILDING SECTION AND DETAILS
MCKEE JOB # :	22-134
DRAWN BY :	VH
DATE:	10-13-2022
REVISED DATE:	
REVISED DATE:	
REVISED DATE:	

SHEET NO. : A5.1

- Z:\2022\22-134 Classroom Addition for Union Hill School\CAD Drawings\Architectural\A5.1 Building Sections.dwg
- Friday, October 14, 2022 10:45:26 AM

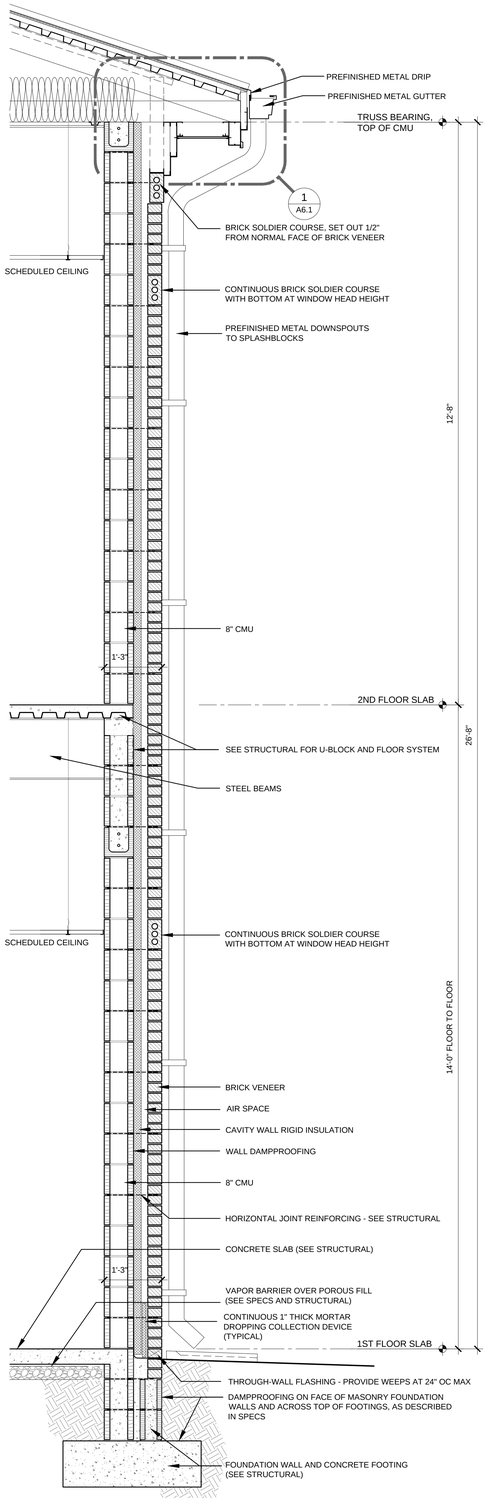

A

WALL SECTION AT NORMAL WALL

SCALE: 3/4"=1'-0"

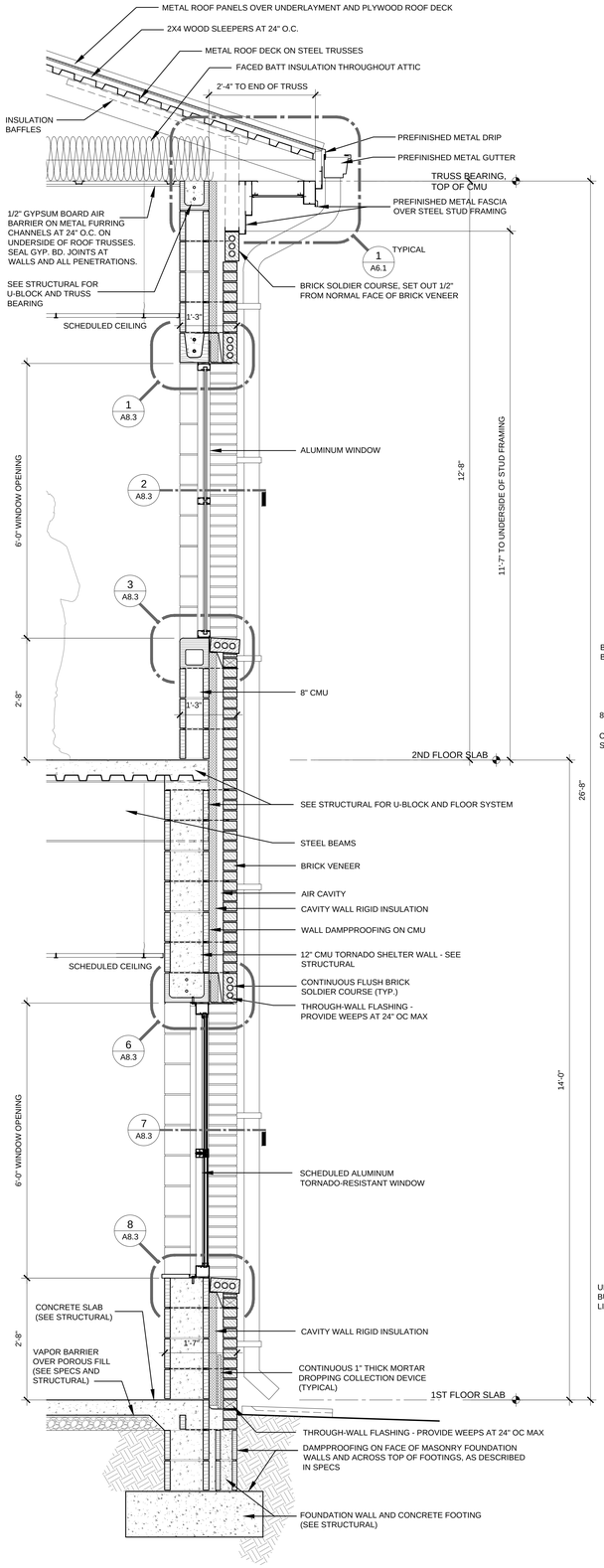

B

WALL SECTION AT SHELTER WALL

SCALE: 3/4"=1'-0"

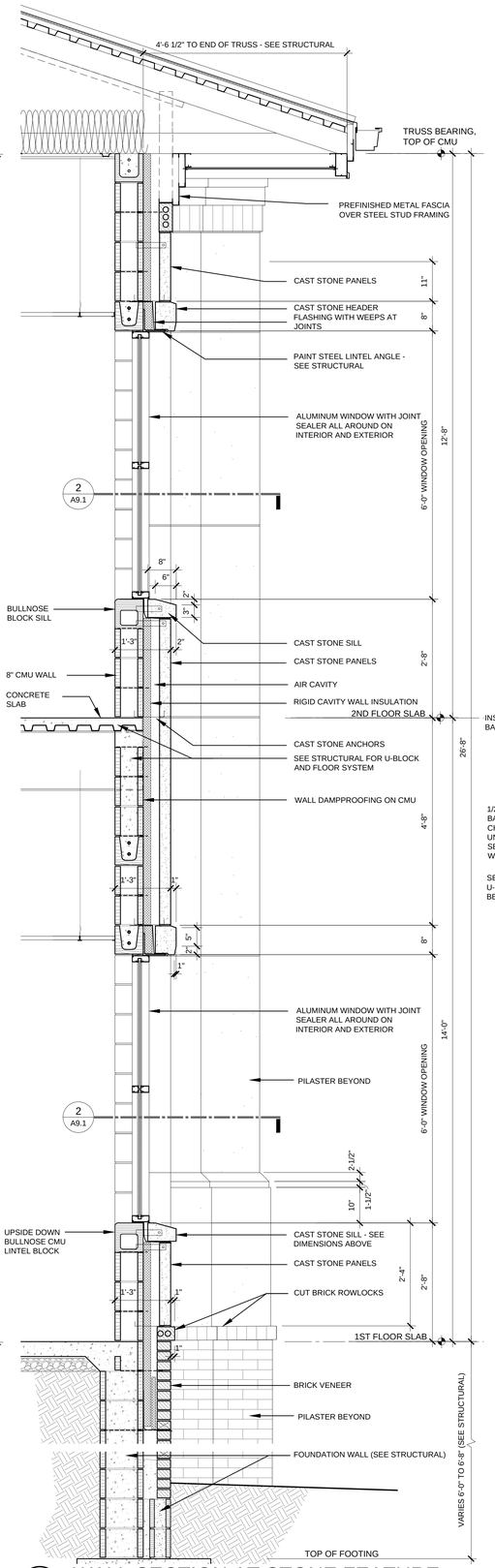

C

WALL SECTION AT STONE FEATURE

SCALE: 3/4"=1'-0"

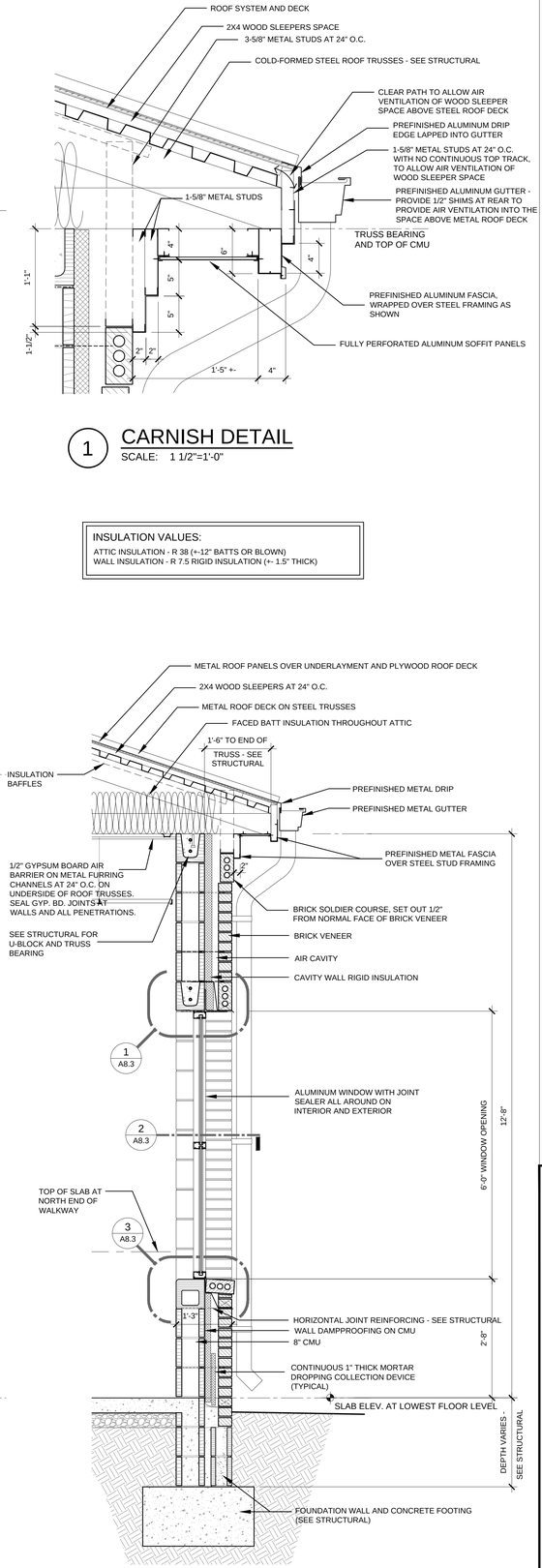

1

CARNISH DETAIL

SCALE: 1 1/2"=1'-0"

INSULATION VALUES:

ATTIC INSULATION - R 38 (+-12" BATTS OR BLOWN)
WALL INSULATION - R 7.5 RIGID INSULATION (+- 1.5" THICK)

D

WALL SECTION AT ENCLOSED WALKWAY

SCALE: 3/4"=1'-0"

CLASSROOM ADDITION

FOR

UNION HILL SCHOOL

SOMERVILLE, ALABAMA

FOR THE

MORGAN COUNTY BOARD OF EDUCATION

McKEE and ASSOCIATES
ARCHITECTS, INC.
631 SOUTH HULL STREET, MONTGOMERY, ALABAMA 36104 (334) 834-9933

STATE OF ALABAMA
WALTER T. McKEE, JR.
No. 10806
MONTGOMERY, ALA.
REGISTERED ARCHITECT

SHEET TITLE : WALL SECTIONS

MCKEE JOB # : 22-134

DRAWN BY : VH

DATE: 10-13-2022

REVISED DATE:

REVISED DATE:

REVISED DATE:

SHEET NO. : A6.1

- Z:\2022\22-134 Classroom Addition for Union Hill School\CAD Drawings\Architectural\A6.1 Wall Sections.dwg
- Friday, October 14, 2022 10:20:39 AM

EXISTING RESTROOM AREA ALTERATIONS

ROOM FINISH SCHEDULE

--- - NO WORK REQUIRED
GBP - GYPSUM BOARD - PAINT
GB - GYPSUM BOARD - NO PAINT
MGBP - MOISTURE RESISTANT GYPSUM BOARD - PAINT
MGB - MOISTURE RESISTANT GYPSUM BOARD - NO PAINT
IGBP - IMPACT RESISTANT GYPSUM BOARD - PAINT
IGB - IMPACT RESISTANT GYPSUM BOARD - NO PAINT

CMUP - CONCRETE MASONRY UNIT - PAINT
CMU - CONCRETE MASONRY UNIT - NO PAINT

C - CARPET
LVT - LUXURY VINYL TILE
PT - PORCELAIN TILE
SC - SEALED CONCRETE
RST - RUBBER STAIR TREADS AND RISERS
WOC - WALK-OFF CARPET TILE

RB - RUBBER BASE
TB - PORCELAIN TILE BASE

ROOM #	ROOM NAME	FLOOR	BASE	WALLS				CEILING		WAINS.	HEIGHT	REMARKS
				NORTH	SOUTH	EAST	WEST	TYPE	HEIGHT			
1	MECHANICAL	SC	---	CMUP	CMUP	CMUP	CMUP	---		---	---	---
2	STORAGE	SC	---	CMUP	CMUP	CMUP	CMUP	SEE RCP PLAN		---	---	---
3	FOYER	LVT	RB	CMUP	CMUP	CMUP	CMUP	SEE RCP PLAN		---	---	---
4	GIRLS	PT	TB	CMUP	CMUP	CMUP	CMUP	SEE RCP PLAN		PT	7'-0"	WAINSCOT ON WALL WITH PLUMBING FIXTURES
5	BOYS	PT	TB	CMUP	CMUP	CMUP	CMUP	SEE RCP PLAN		PT	7'-0"	WAINSCOT ON WALL WITH PLUMBING FIXTURES
6	JANITOR	PT	TB	CMUP	CMUP	CMUP	CMUP	SEE RCP PLAN		PT	7'-0"	WAINSCOT ON SOUTH WALL AND 5' OF EAST WALL AT MOP SINK
7	EXISTING CORRIDOR	LVT	RB	CMUP	CMUP	CMUP	CMUP	SEE RCP PLAN		---	---	---

NEW CLASSROOM BUILDING

ROOM FINISH SCHEDULE

--- - NO WORK REQUIRED
GBP - GYPSUM BOARD - PAINT
GB - GYPSUM BOARD - NO PAINT
MGBP - MOISTURE RESISTANT GYPSUM BOARD - PAINT
MGB - MOISTURE RESISTANT GYPSUM BOARD - NO PAINT
IGBP - IMPACT RESISTANT GYPSUM BOARD - PAINT
IGB - IMPACT RESISTANT GYPSUM BOARD - NO PAINT

CMUP - CONCRETE MASONRY UNIT - PAINT
CMU - CONCRETE MASONRY UNIT - NO PAINT

C - CARPET
LVT - LUXURY VINYL TILE
PT - PORCELAIN TILE
SC - SEALED CONCRETE
RST - RUBBER STAIR TREADS AND RISERS
WOC - WALK-OFF CARPET TILE

RB - RUBBER BASE
TB - PORCELAIN TILE BASE

ROOM #	ROOM NAME	FLOOR	BASE	WALLS				CEILING		WAINS.	HEIGHT	REMARKS
				NORTH	SOUTH	EAST	WEST	TYPE	HEIGHT			
---	ELEVATOR	LVT	---	---	---	---	---	---		---	---	---
A	STAIR	LVT, RST	RB	CMUP	CMUP	CMUP	CMUP	SEE RCP PLAN		---	---	---
B	STAIR	LVT, RST	RB	CMUP	CMUP	CMUP	CMUP	SEE RCP PLAN		---	---	---
100	CORRIDOR	LVT	RB	CMUP	CMUP	CMUP	CMUP	SEE RCP PLAN		---	---	---
101	ELEVATOR EQUIPMENT	SC	---	CMU	CMU	CMU	CMU	---		---	---	---
102	WORK ROOM	LVT	RB	CMUP				SEE RCP PLAN		---	---	---
102A	MECHANICAL	SC	---	CMU	CMU	CMU	CMU	---		---	---	---
103	CLASSROOM	LVT	RB	CMUP,IGBP	CMUP	CMUP,IGBP	CMUP	SEE RCP PLAN		---	---	---
103A	MECHANICAL	SC	---	CMU	CMU	CMU	CMU	---		---	---	---
103B	SUPPLIES	LVT	RB	CMUP	IGBP	IGBP	CMUP	SEE RCP PLAN		---	---	---
104	CLASSROOM	LVT	RB	CMUP	CMUP	IGBP	CMUP	SEE RCP PLAN		---	---	---
104A	SUPPLIES	LVT	RB	CMUP	IGBP	CMUP	IGBP	SEE RCP PLAN		---	---	---
105	GIRLS	PT	TB	CMUP	CMUP	CMUP	CMUP	SEE RCP PLAN		PT	7'-0"	WAINSCOT ON WALLS WITH PLUMBING FIXTURES (2 WALLS)
106	CLOSET	LVT	RB	CMUP	CMUP	CMUP	CMUP	SEE RCP PLAN		---	---	---
107	BOYS	PT	TB	CMUP	CMUP	CMUP	CMUP	SEE RCP PLAN		PT	7'-0"	WAINSCOT ON WALLS WITH PLUMBING FIXTURES (2 WALLS)
108	DATA	SC	---	CMU	CMU	CMU	CMU	---		---	---	---
109	JANITOR	PT	TB	CMUP	CMUP	CMUP	CMUP	SEE RCP PLAN		PT	7'-0"	WAINSCOT ON EAST AND SOUTH WALLS
110	ELECTRICAL	SC	---	CMU	CMU	CMU	CMU	---		---	---	---
111	VESTIBULE	WOC	RB	CMUP	CMUP	CMUP	CMUP	SEE RCP PLAN		---	---	---
112	CORRIDOR	LVT	RB	CMUP	CMUP	CMUP	CMUP	SEE RCP PLAN		---	---	---
113	VESTIBULE	WOC	RB	CMUP	CMUP	CMUP	CMUP	SEE RCP PLAN		---	---	---
114	MECHANICAL	SC	---	CMU	CMU	CMU	CMU	---		---	---	---
115	STAFF RESTROOM	PT	TB	CMUP	CMUP	CMUP	CMUP	SEE RCP PLAN		PT	7'-0"	WAINSCOT ON WALL WITH PLUMBING FIXTURES
116	CLASSROOM	LVT	RB	CMUP	CMUP	CMUP,IGBP	CMUP	SEE RCP PLAN		---	---	---
116A	MECHANICAL	SC	---	CMU	CMU	CMU	CMU	---		---	---	---
116B	SUPPLIES	LVT	RB	CMUP	IGBP	IGBP	IGBP	SEE RCP PLAN		---	---	---
117	CLASSROOM	LVT	RB	CMUP	CMUP	CMUP,IGBP	CMUP	SEE RCP PLAN		---	---	---
117A	MECHANICAL	SC	---	CMU	CMU	CMU	CMU	---		---	---	---
117B	SUPPLIES	LVT	RB	IGBP	IGBP	IGBP	IGBP	SEE RCP PLAN		---	---	---
118	CLASSROOM	LVT	RB	CMUP	CMUP	CMUP	CMUP,IGBP	SEE RCP PLAN		---	---	---
118A	SUPPLIES	LVT	RB	IGBP	IGBP	IGBP	CMUP	SEE RCP PLAN		---	---	---
119	CLASSROOM	LVT	RB	CMUP	CMUP	CMUP	CMUP,IGBP	SEE RCP PLAN		---	---	---
119A	SUPPLIES	LVT	RB	IGBP	CMUP	IGBP	IGBP	SEE RCP PLAN		---	---	---
120	CORRIDOR	LVT	RB	CMUP	CMUP	CMUP	CMUP	SEE RCP PLAN		---	---	---
121	ELECTRICAL	SC	---	CMU	CMU	CMU	CMU	---		---	---	---
122	SPRINKLER RISER	SC	---	CMU	CMU	CMU	CMU	---		---	---	---
123	ENCLOSED WALKWAY	LVT	RB	CMUP	CMUP	CMUP	CMUP	SEE RCP PLAN		---	---	---
200	CORRIDOR	LVT	RB	CMUP	CMUP	CMUP	CMUP	SEE RCP PLAN		---	---	---
201	JANITOR	PT	TB	CMUP	CMUP	CMUP	CMUP	SEE RCP PLAN		PT	7'-0"	WAINSCOT ON WEST AND NORTH WALLS
202	WORK ROOM	LVT	RB	CMUP	CMUP	CMUP	CMUP	SEE RCP PLAN		---	---	---
203	GIRLS	PT	TB	CMUP	CMUP	CMUP	CMUP	SEE RCP PLAN		PT	7'-0"	WAINSCOT ON WALLS WITH PLUMBING FIXTURES (2 WALLS)
204	SUPPLIES	LVT	RB	CMUP	CMUP	CMUP	CMUP	SEE RCP PLAN		---	---	---
204A	MECHANICAL	SC	---	CMU	CMU	CMU	CMU	---		---	---	---
205	BOYS	PT	TB	CMUP	CMUP	CMUP	CMUP	SEE RCP PLAN		PT	7'-0"	WAINSCOT ON WALLS WITH PLUMBING FIXTURES (2 WALLS)
206	SPRINKLER RISER	SC	---	CMU	CMU	CMU	CMU	---		---	---	---
207	CORRIDOR	LVT	RB	CMUP	CMUP	CMUP	CMUP	SEE RCP PLAN		---	---	---
208	CLASSROOM	LVT	RB	CMUP	CMUP	CMUP,IGBP	CMUP,IGBP	SEE RCP PLAN		---	---	---
208A	DATA	SC	---	CMU	CMU	CMU	CMU	---		---	---	---
208B	ELECTRICAL	SC	---	CMU	CMU	CMU	CMU	---		---	---	---
208C	MECHANICAL	SC	---	CMU	CMU	CMU	CMU	---		---	---	---
209	MECHANICAL	SC	---	CMU	CMU	CMU	CMU	---		---	---	---
210	CLASSROOM	LVT	RB	CMUP	CMUP	IGBP	CMUP,IGBP	SEE RCP PLAN		---	---	---
210A	SUPPLIES	LVT	RB	CMUP	IGBP	IGBP	IGBP	SEE RCP PLAN		---	---	---
211	CLASSROOM	LVT	RB	CMUP	CMUP,IGBP	IGBP	CMUP	SEE RCP PLAN		---	---	---
211A	SUPPLIES	LVT	RB	IGBP	CMUP	CMUP,IGBP	IGBP	SEE RCP PLAN		---	---	---
212	CLASSROOM	LVT	RB	CMUP	CMUP	CMUP,IGBP	IGBP	SEE RCP PLAN		---	---	---
212A	MECHANICAL	SC	---	CMU	CMU	CMU	CMU	---		---	---	---
212B	SUPPLIES	LVT	RB	CMUP	IGBP	IGBP	IGBP	SEE RCP PLAN		---	---	---
213	CLASSROOM	LVT	RB	CMUP	CMUP	CMUP,IGBP	IGBP	SEE RCP PLAN		---	---	---
213A	MECHANICAL	SC	---	CMU	CMU	CMU	CMU	---		---	---	---
213B	SUPPLIES	LVT	RB	IGBP	CMUP	IGBP	IGBP	SEE RCP PLAN		---	---	---
214	CLASSROOM	LVT	RB	CMUP	CMUP	CMUP	CMUP,IGBP	SEE RCP PLAN		---	---	---
214A	SUPPLIES	LVT	RB	IGBP	CMUP	IGBP	IGBP	SEE RCP PLAN		---	---	---
215	CLASSROOM	LVT	RB	CMUP	CMUP	CMUP	CMUP,IGBP	SEE RCP PLAN		---	---	---
215A	SUPPLIES	LVT	RB	CMUP	IGBP	IGBP	IGBP	SEE RCP PLAN		---	---	---
216	MECHANICAL	SC	---	CMU	CMU	CMU	CMU	---		---	---	---
217	STAFF RESTROOM	PT	TB	CMUP	CMUP	CMUP	CMUP	SEE RCP PLAN		PT	7'-0"	WAINSCOT ON WALL WITH PLUMBING FIXTURES

CLASSROOM ADDITION
FOR
UNION HILL SCHOOL
SOMERVILLE, ALABAMA
FOR THE
MORGAN COUNTY BOARD OF EDUCATION

McKEE and ASSOCIATES
ARCHITECTS, INC.
631 SOUTH HULL STREET, MONTGOMERY, ALABAMA 36104 (334) 834-9833

STATE OF ALABAMA
WALTER T. MCKEE, JR.
NO. 1882
MONTGOMERY, ALA.
REGISTERED ARCHITECT

SHEET TITLE : FINISH SCHEDULE

MCKEE JOB # : 22-134

DRAWN BY : VH

DATE: 10-13-2022

REVISED DATE:

REVISED DATE:

REVISED DATE:

SHEET NO. : A8.1

- Z:\2022\22-134 Classroom Addition for Union Hill School\CAD Drawings\Architectural\A8.1 Finish Schedule.dwg
- Friday, October 14, 2022 10:20:58 AM

EXISTING RESTROOM AREA ALTERATIONS

DOOR SCHEDULE

DOOR #	WIDTH	HEIGHT	THICKNESS	MATERIALS	DOOR TYPE	DOOR FINISH	FRAME TYPE	FRAME FINISH	LABEL	DETAILS HEAD	DETAILS JAMB	SIGNAGE	REMARKS
1	EXISTING	EXISTING	EXISTING	EXISTING WOOD	EXISTING	PAINT	EXISTING	PAINT	---	---	---	1 CLOSET	---
2	3'-4"	7'-0"	1 3/4"	HOLLOW METAL	B	PAINT	HM1	PAINT	20 MINUTES	4/A8.3	5/A8.3	2 STORAGE	---
4	3'-0"	7'-0"	1 3/4"	WOOD	B	FACTORY	HM1	PAINT	20 MINUTES	4/A8.3	5/A8.3	4 GIRLS	---
5	3'-0"	7'-0"	1 3/4"	WOOD	B	FACTORY	HM1	PAINT	20 MINUTES	4/A8.3	5/A8.3	5 BOYS	---
6	3'-0"	7'-0"	1 3/4"	HOLLOW METAL	B	PAINT	HM1	PAINT	20 MINUTES	4/A8.3	5/A8.3	6 JANITOR	---
10	3'-0"	7'-0"	1 3/4"	ALUMINUM STOREFRONT	A	FACTORY	AS3	FACTORY	---	13/A8.3 SIM.	14/A8.3 SIM.	---	INSULATED DOOR AND FRAMES
11	PAIR 3'-0"	7'-0"	1 3/4"	HOLLOW METAL	D	PAINT	HM1	PAINT	1-1/2 HOURS	4/A8.3	5/A8.3	---	FIRE RATED GLAZING UP TO 100 SQ. INCHES
12	3'-0"	7'-0"	1 3/4"	HOLLOW METAL	B	PAINT	HM1	PAINT	---	---	---	---	TEMPORARY DOOR AND FRAME

SIGN MOUNTING HEIGHT

703.4.1 HEIGHT ABOVE FINISH FLOOR OF GROUND
TACTILE CHARACTERS ON SIGNS SHALL BE LOCATED 48 INCHES (1220 mm) MINIMUM ABOVE THE FINISH FLOOR OR GROUND SURFACE, MEASURED FROM THE BASELINE OF THE LOWEST TACTILE CHARACTER AND 60 INCHES (1525 mm) MAXIMUM ABOVE FINISH FLOOR OR GROUND SURFACE, MEASURED FROM THE BASELINE OF THE HIGHEST TACTILE CHARACTER.
EXCEPTION: BRAILLE PROVIDED ON ELEVATOR CAR CONTROLS SHALL BE SEPARATED 3/8 INCHES (4.8 mm) MINIMUM AND SHALL BE LOCATED EITHER DIRECTLY BELOW OR ADJACENT TO THE CORRESPONDING RAISED CHARACTERS OR SYMBOLS.

703.4.2 LOCATION
WHERE A TACTILE SIGN IS PROVIDED AT A DOOR, THE SIGN SHALL BE LOCATED ALONGSIDE THE DOOR AT THE LATCH SIDE. WHERE A TACTILE SIGN IS PROVIDED AT DOUBLE DOORS WITH ONE ACTIVE LEAF, THE SIGN SHALL BE LOCATED ON THE INACTIVE LEAF. WHERE A TACTILE SIGN IS PROVIDED AT DOUBLE DOORS WITH TWO ACTIVE LEAFS, THE SIGN SHALL BE LOCATED TO THE RIGHT OF THE RIGHT HAND DOOR. WHERE THERE IS NO WALL SPACE AT THE LATCH SIDE OF A SINGLE DOOR OR AT THE RIGHT SIDE OF DOUBLE DOORS, SIGNS SHALL BE LOCATED ON THE NEAREST ADJACENT WALL. SIGNS CONTAINING TACTILE CHARACTERS SHALL BE LOCATED SO THAT THE CLEAR FLOOR SPACE OF 18 INCHES (455 mm) MINIMUM, CENTERED ON THE TACTILE CHARACTERS, IS PROVIDED BEYOND THE ARC OF ANY DOOR SWING BETWEEN THE CLOSEST POSITION AND 45 DEGREE OPEN POSITION.
EXCEPTION: SIGNS WITH TACTILE CHARACTERS SHALL BE PERMITTED ON THE PUSH SIDE OF DOORS WITH CLOSERS AND WITHOUT HOLD-OPEN DEVICES.

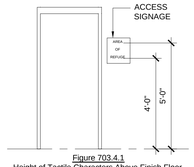

Figure 703.4.1
Height of Tactile Characters Above Finish Floor or Ground

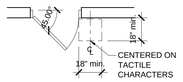

Figure 703.4.2
Location of Tactile Signs at Doors

SIGNAGE NOTES:

FURNISH INDIVIDUAL PLASTIC LAMINATE SIGNAGE SYSTEM WITH ROOM OR OCCUPANT'S NAME AND ROOM NUMBER. FINAL WORDING TO BE FURNISHED WHEN SHOP DRAWINGS FOR SIGNAGE SYSTEM ARE SUBMITTED. FURNISH INDIVIDUAL PLASTIC LAMINATE RESTROOM SIGNS FOR DOOR(S) AND HANDICAPED ACCESS SIGN TO BE PLACED ON WALL BESIDE RESTROOM DOOR(S) -SEE DIAGRAM.

LABELED DOOR AND FRAME NOTE:

HOURLY RATING DESIGNATIONS AND / OR ALPHABETICAL LETTER DESIGNATIONS ARE GIVEN WHERE PROTECTED OPENINGS ARE REQUIRED IN RATED PARTITIONS. THESE OPENING PROTECTIVE ASSEMBLIES SHALL INCLUDE THE FRAME, DOOR, HARDWARE, CLOSING DEVICE, SILL AND ANCHORAGE. CONTRACTOR SHALL SEE THAT NO COMPONENT IS OMITTED OR SUBSTANDARD QUALITY USED SUCH THAT THE EFFECTIVENESS OF THE ENTIRE OPENING AS A FIRE OR SMOKE BARRIER MIGHT BE JEOPARDIZED. DOORS AND FRAMES SHALL BE FURNISHED WITH UNDERWRITER'S LABORATORIES OR WARNOCKHERSEY LABELS WITH APPROPRIATE FIRE RESISTANCE RATINGS FOR THE CLASS OF OPENING SCHEDULED. SUBJECT TO DOOR MANUFACTURER'S PROCEDURAL LIMITATIONS, LABELS SHOULD BEAR THE FOLLOWING NOTATION: "FIRE DOOR, TO BE EQUIPPED WITH FIRE EXIT HARDWARE"

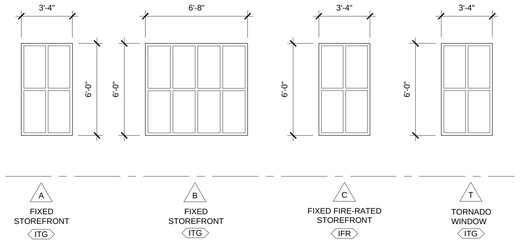

WINDOW TYPES
SCALE: 1/4" - 1'-0"

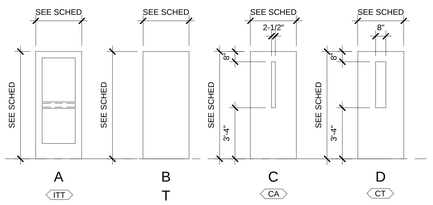

DOOR TYPES
SCALE: 1/4" - 1'-0"

GLAZING SCHEDULE	
SYMBOL	DESCRIPTION
CA	CLEAR ANNEALED GLASS
CT	CLEAR TEMPERED GLASS
IFR	INSULATING FIRE-RATED GLASS
ITG	INSULATING TINTED GLASS
ITT	INSULATING TINTED TEMPERED

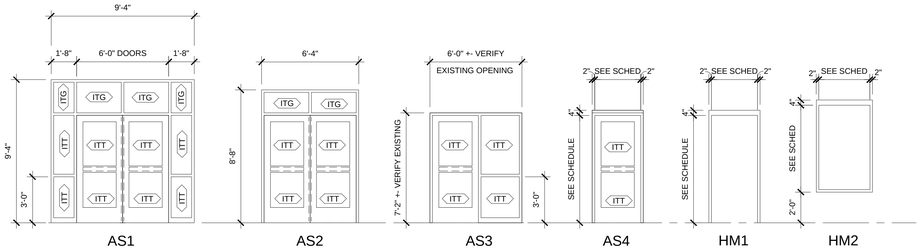

FRAME TYPES
SCALE: 1/4" - 1'-0"

NEW CLASSROOM BUILDING

DOOR SCHEDULE

DOOR #	WIDTH	HEIGHT	THICKNESS	MATERIALS	DOOR TYPE	DOOR FINISH	FRAME TYPE	FRAME FINISH	LABEL	DETAILS HEAD	DETAILS JAMB	SIGNAGE	REMARKS
100	PAIR 3'-0"	7'-0"	1 3/4"	ALUMINUM STOREFRONT	A	FACTORY	AS1	FACTORY	---	13/A8.3	14/A8.3	---	INSULATED DOORS AND FRAMES
100A	PAIR 4'-0"	8'-0"	1 3/4"	TORNADO SHELTER DOORS	T	PAINT	T	PAINT	1-1/2 HOURS	4/A8.3	5/A8.3	---	---
100B	3'-0"	7'-0"	1 3/4"	HOLLOW METAL	B	PAINT	HM1	PAINT	---	11/A8.3	12/A8.3	---	INSULATED DOOR
101	3'-8"	7'-0"	1 3/4"	HOLLOW METAL	B	PAINT	HM1	PAINT	3/4 HOUR	4/A8.3	5/A8.3	101 ELEVATOR EQUIPMENT	---
102	3'-0"	7'-0"	1 3/4"	WOOD	C	FACTORY	HM1	PAINT	---	4/A8.3	5/A8.3	102 STAFF WORK ROOM	---
102A	3'-4"	5'-6"	1 3/4"	HOLLOW METAL	B	PAINT	HM2	PAINT	---	4/A8.3	5/A8.3	102A MECHANICAL	15/A8.3 SILL DETAIL
103	3'-0"	7'-0"	1 3/4"	WOOD	C	FACTORY	HM1	PAINT	---	4/A8.3	5/A8.3	103 CLASSROOM	---
103A	3'-4"	5'-6"	1 3/4"	HOLLOW METAL	B	PAINT	HM2	PAINT	---	4/A8.3	5/A8.3	103A MECHANICAL	15/A8.3 SILL DETAIL
103B	3'-0"	7'-0"	1 3/4"	WOOD	B	FACTORY	HM1	PAINT	---	9/A8.3	10/A8.3	103B SUPPLIES	---
104	3'-0"	7'-0"	1 3/4"	WOOD	C	FACTORY	HM1	PAINT	---	4/A8.3	5/A8.3	104 CLASSROOM	---
104A	3'-0"	7'-0"	1 3/4"	WOOD	B	FACTORY	HM1	PAINT	---	9/A8.3	10/A8.3	104A SUPPLIES	---
104B	3'-4"	5'-6"	1 3/4"	HOLLOW METAL	B	PAINT	HM2	PAINT	---	4/A8.3	5/A8.3	103A MECHANICAL	15/A8.3 SILL DETAIL
106	3'-0"	7'-0"	1 3/4"	WOOD	B	FACTORY	HM1	PAINT	---	4/A8.3	5/A8.3	106 CLOSET	---
108	3'-0"	7'-0"	1 3/4"	WOOD	B	FACTORY	HM1	PAINT	---	4/A8.3	5/A8.3	108 DATA	---
109	3'-0"	7'-0"	1 3/4"	HOLLOW METAL	B	PAINT	HM1	PAINT	---	4/A8.3	5/A8.3	109 JANITOR	---
110	3'-8"	7'-0"	1 3/4"	HOLLOW METAL	B	PAINT	HM1	PAINT	---	4/A8.3	5/A8.3	110 ELECTRICAL	---
111	PAIR 3'-0"	7'-0"	1 3/4"	HOLLOW METAL	D	PAINT	HM1	PAINT	1-1/2 HOURS	13/A8.3	14/A8.3	---	FIRE RATED GLAZING UP TO 100 SQ. INCHES
111A	PAIR 4'-0"	8'-0"	1 3/4"	TORNADO SHELTER DOORS	T	PAINT	T	PAINT	1-1/2 HOURS	4/A8.3	5/A8.3	---	---
112	PAIR 4'-0"	8'-0"	1 3/4"	TORNADO SHELTER DOORS	T	PAINT	T	PAINT	1-1/2 HOURS	4/A8.3	5/A8.3	---	---
113	PAIR 3'-0"	7'-0"	1 3/4"	ALUMINUM STOREFRONT	A	FACTORY	AS2	FACTORY	---	13/A8.3	14/A8.3	---	INSULATED DOORS AND FRAMES
113A	PAIR 4'-0"	8'-0"	1 3/4"	TORNADO SHELTER DOORS	T	PAINT	T	PAINT	1-1/2 HOURS	4/A8.3	5/A8.3	---	---
114	3'-0"	7'-0"	1 3/4"	HOLLOW METAL	B	PAINT	HM1	PAINT	---	4/A8.3	5/A8.3	114 MECHANICAL	---
115	3'-0"	7'-0"	1 3/4"	WOOD	B	FACTORY	HM1	PAINT	---	4/A8.3	5/A8.3	115 STAFF RESTROOM	---
116	3'-0"	7'-0"	1 3/4"	WOOD	C	FACTORY	HM1	PAINT	---	4/A8.3	5/A8.3	116 CLASSROOM	---
116A	PAIR 3'-0"	7'-0"	1 3/4"	HOLLOW METAL	B	PAINT	HM1	PAINT	---	4/A8.3	5/A8.3	116A MECHANICAL	---
116B	3'-0"	7'-0"	1 3/4"	WOOD	B	FACTORY	HM1	PAINT	---	9/A8.3	10/A8.3	116B SUPPLIES	---
117	3'-0"	7'-0"	1 3/4"	WOOD	C	FACTORY	HM1	PAINT	---	4/A8.3	5/A8.3	117 CLASSROOM	---
117A	PAIR 3'-0"	7'-0"	1 3/4"	HOLLOW METAL	B	PAINT	HM1	PAINT	---	4/A8.3	5/A8.3	117A MECHANICAL	---
117B	3'-0"	7'-0"	1 3/4"	WOOD	B	FACTORY	HM1	PAINT	---	9/A8.3	10/A8.3	117B SUPPLIES	---
118	3'-0"	7'-0"	1 3/4"	WOOD	C	FACTORY	HM1	PAINT	---	4/A8.3	5/A8.3	118 CLASSROOM	---
118A	3'-0"	7'-0"	1 3/4"	WOOD	B	FACTORY	HM1	PAINT	---	9/A8.3	10/A8.3	118A SUPPLIES	---
119	3'-0"	7'-0"	1 3/4"	WOOD	C	FACTORY	HM1	PAINT	---	4/A8.3	5/A8.3	119 CLASSROOM	---
119A	3'-0"	7'-0"	1 3/4"	WOOD	B	FACTORY	HM1	PAINT	---	9/A8.3	10/A8.3	119A SUPPLIES	---
120	3'-4"	7'-0"	1 3/4"	HOLLOW METAL	D	PAINT	HM1	PAINT	---	11/A8.3	12/A8.3	---	INSULATED DOOR
121	3'-8"	7'-0"	1 3/4"	HOLLOW METAL	B	PAINT	HM1	PAINT	---	11/A8.3	12/A8.3	121 ELECTRICAL	INSULATED DOOR
122	3'-0"	7'-0"	1 3/4"	HOLLOW METAL	B	PAINT	HM1	PAINT	---	11/A8.3	12/A8.3	122 SPRINKLER RISER	INSULATED DOOR
123A	3'-0"	7'-0"	1 3/4"	HOLLOW METAL	B	PAINT	HM1	PAINT	---	11/A8.3	12/A8.3	---	INSULATED DOOR
123B	3'-0"	7'-0"	1 3/4"	ALUMINUM STOREFRONT	A	FACTORY	AS4	FACTORY	---	13/A8.3	14/A8.3	---	INSULATED DOOR AND FRAME
123C	3'-0"	7'-0"	1 3/4"	ALUMINUM STOREFRONT	A	FACTORY	AS4	FACTORY	---	13/A8.3	14/A8.3	---	INSULATED DOOR AND FRAME
123D	3'-0"	7'-0"	1 3/4"	HOLLOW METAL	B	PAINT	HM1	PAINT	---	11/A8.3	12/A8.3	---	INSULATED DOOR
201	3'-0"	7'-0"	1 3/4"	HOLLOW METAL	B	PAINT	HM1	PAINT	---	4/A8.3	5/A8.3	201 JANITOR	---
202	3'-0"	7'-0"	1 3/4"	WOOD	C	FACTORY	HM1	PAINT	---	4/A8.3	5/A8.3	202 STAFF WORK ROOM	---
204	3'-4"	7'-0"	1 3/4"	WOOD	B	FACTORY	HM1	PAINT	---	4/A8.3	5/A8.3	204 SUPPLIES	---
204A	3'-4"	7'-0"	1 3/4"	HOLLOW METAL	B	PAINT	HM1	PAINT	---	4/A8.3	5/A8.3	204A MECHANICAL	---
206	3'-0"	7'-0"	1 3/4"	HOLLOW METAL	B	PAINT	HM1	PAINT	---	4/A8.3	5/A8.3	206 SPRINKLER RISER	---
208	3'-0"	7'-0"	1 3/4"	WOOD	C	FACTORY	HM1	PAINT	---	4/A8.3	5/A8.3	208 CLASSROOM	---
208A	3'-0"	7'-0"	1 3/4"	HOLLOW METAL	B	PAINT	HM1	PAINT	---	4/A8.3	5/A8.3	208A DATA	---
208B	3'-0"	7'-0"	1 3/4"	HOLLOW METAL	B	PAINT	HM1	PAINT	---	4/A8.3	5/A8.3	208B ELECTRICAL	---
208C	3'-4"	5'-6"	1 3/4"	HOLLOW METAL	B	PAINT	HM2	PAINT	---	4/A8.3	5/A8.3	208C MECHANICAL	15/A8.3 SILL DETAIL
209	PAIR 3'-0"	7'-0"	1 3/4"	HOLLOW METAL	B	PAINT	HM1	PAINT	---	4/A8.3	5/A8.3	209 MECHANICAL	---
210	3'-0"	7'-0"	1 3/4"	WOOD	C	FACTORY	HM1	PAINT	---	4/A8.3	5/A8.3	210 CLASSROOM	---
210A	3'-0"	7'-0"	1 3/4"	WOOD	B	FACTORY	HM1	PAINT	---	9/A8.3	10/A8.3	210A SUPPLIES	---
210B	3'-4"	5'-6"	1 3/4"	HOLLOW METAL	B	PAINT	HM2	PAINT	---	4/A8.3	5/A8.3	210B MECHANICAL	15/A8.3 SILL DETAIL
211	3'-0"	7'-0"	1 3/4"	WOOD	C	FACTORY	HM1	PAINT	---	4/A8.3	5/A8.3	211 CLASSROOM	---
211A	3'-0"	7'-0"	1 3/4"	WOOD	B	FACTORY	HM1	PAINT	---	9/A8.3	10/A8.3	211A SUPPLIES	---
212	3'-0"	7'-0"	1 3/4"	WOOD	C	FACTORY	HM1	PAINT	---	4/A8.3	5/A8.3	212 CLASSROOM	---
212A	PAIR 3'-0"	7'-0"	1 3/4"	HOLLOW METAL	B	PAINT	HM1	PAINT	---	4/A8.3	5/A8.3	212A MECHANICAL	---
212B	3'-0"	7'-0"	1 3/4"	WOOD	B	FACTORY	HM1	PAINT	---	9/A8.3	10/A8.3	212B SUPPLIES	---
213	3'-0"	7'-0"	1 3/4"	WOOD	C	FACTORY	HM1	PAINT	---	4/A8.3	5/A8.3	213 CLASSROOM	---
213A	PAIR 3'-0"	7'-0"	1 3/4"	HOLLOW METAL	B	PAINT	HM1	PAINT	---	4/A8.3	5/A8.3	213A MECHANICAL	---
213B	3'-0"	7'-0"	1 3/4"	WOOD	B	FACTORY	HM1	PAINT	---	9/A8.3	10/A8.3	213B SUPPLIES	---
214	3'-0"	7'-0"	1 3/4"	WOOD	C	FACTORY	HM1	PAINT	---	4/A8.3	5/A8.3	214 CLASSROOM	---
214A	3'-0"	7'-0"	1 3/4"	WOOD	B	FACTORY	HM1	PAINT	---	9/A8.3	10/A8.3	214A SUPPLIES	---
215	3'-0"	7'-0"	1 3/4"	WOOD	C	FACTORY	HM1	PAINT	---	4/A8.3	5/A8.3	215 CLASSROOM	---
215A	3'-0"	7'-0"	1 3/4"	WOOD	B	FACTORY	HM1	PAINT	---	9/A8.3	10/A8.3	215A SUPPLIES	---
216	3'-4"	5'-6"	1 3/4"	HOLLOW METAL	B	PAINT	HM2	PAINT	---	4/A8.3	5/A8.3	216 MECHANICAL	15/A8.3 SILL DETAIL
217	3'-0"	7'-0"	1 3/4"	WOOD	B	FACTORY	HM1	PAINT	---	4/A8.3	5/A8.3	217 STAFF RESTROOM	---

CLASSROOM ADDITION
FOR
UNION HILL SCHOOL
SOMERVILLE, ALABAMA
FOR THE
MORGAN COUNTY BOARD OF EDUCATION

McKEE and ASSOCIATES
ARCHITECTS, INC.
631 SOUTH HULL STREET, MONTGOMERY, ALABAMA 36104 (334) 834-9833

STATE OF ALABAMA
WALTER T. MCKEE, JR.
NO. 4882
MONTGOMERY, ALA.
REGISTERED ARCHITECT

SHEET TITLE : DOOR, FRAME, AND WINDOW SCHEDULES

MCKEE JOB # : 22-134

DRAWN BY : VH

DATE: 10-13-2022

REVISED DATE:

REVISED DATE:

REVISED DATE:

SHEET NO. : A8.2

- Z:\2022\22-134 Classroom Addition for Union Hill School\CAD Drawings\Architectural\A8.2 Door Schedule.dwg
- Friday, October 14, 2022 10:20:54 AM

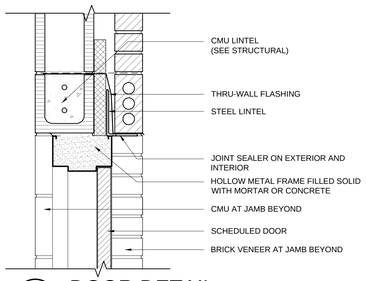

11 DOOR DETAIL
SCALE: 1 1/2"=1'-0" HEAD

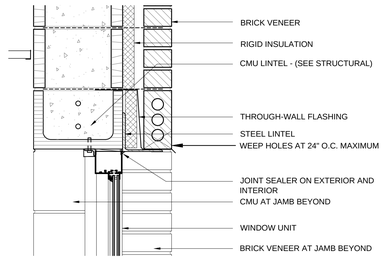

6 TORNADO WINDOW DETAIL
SCALE: 1 1/2"=1'-0" HEAD

GENERAL NOTE: WRAP ALL EXPOSED STEEL LINTELS AND PLATES IN BRAKE METAL TYPICAL

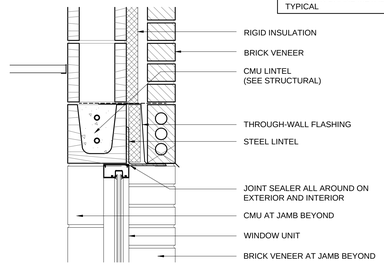

1 WINDOW DETAIL
SCALE: 1 1/2"=1'-0" HEAD

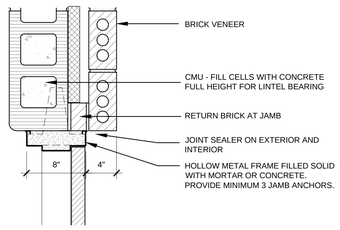

12 DOOR DETAIL
SCALE: 1 1/2"=1'-0" JAMB

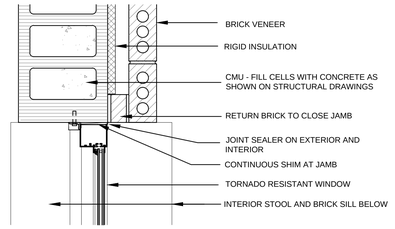

7 TORNADO WINDOW DETAIL
SCALE: 1 1/2"=1'-0" JAMB

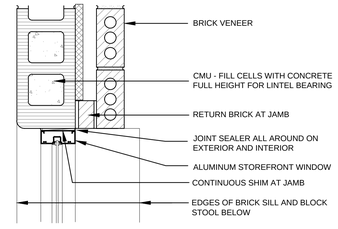

2 WINDOW DETAIL
SCALE: 1 1/2"=1'-0" JAMB

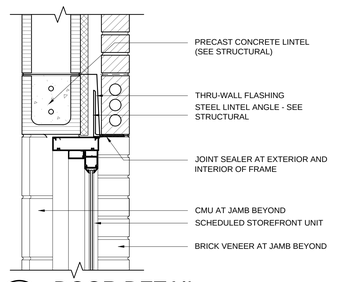

13 DOOR DETAIL
SCALE: 1 1/2"=1'-0" HEAD

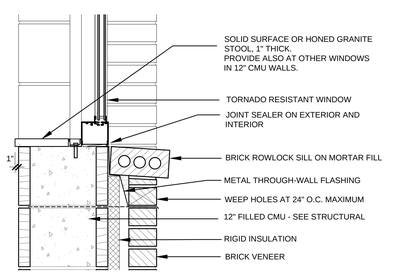

8 TORNADO WINDOW DETAIL
SCALE: 1 1/2"=1'-0" SILL

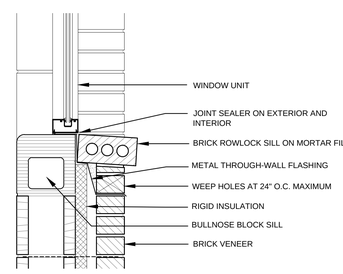

3 WINDOW DETAIL
SCALE: 1 1/2"=1'-0" SILL

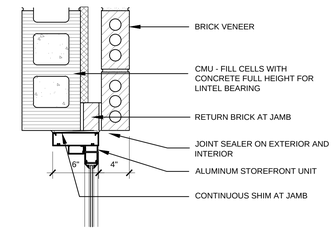

14 DOOR DETAIL
SCALE: 1 1/2"=1'-0" JAMB

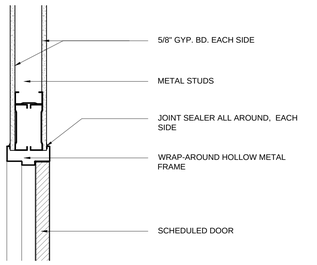

9 DOOR DETAIL
SCALE: 1 1/2"=1'-0" HEAD

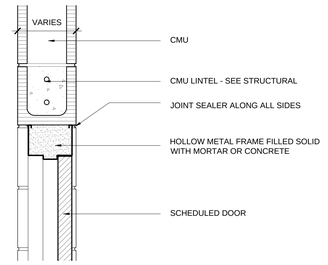

4 DOOR DETAIL
SCALE: 1 1/2"=1'-0" HEAD

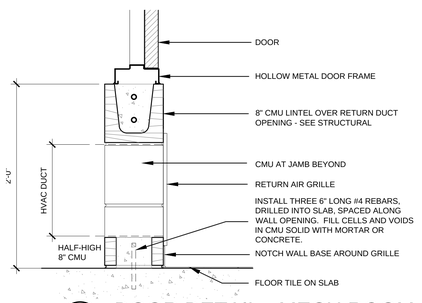

15 DOOR DETAIL - MECH ROOM
SCALE: 1 1/2"=1'-0" SILL

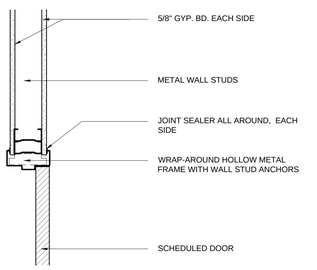

10 DOOR DETAIL
SCALE: 1 1/2"=1'-0" JAMB

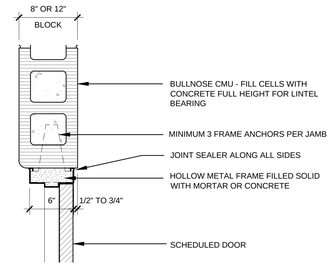

5 DOOR DETAIL
SCALE: 1 1/2"=1'-0" JAMB

CLASSROOM ADDITION
FOR
UNION HILL SCHOOL
SOMERVILLE, ALABAMA
FOR THE
MORGAN COUNTY BOARD OF EDUCATION

McKEE and ASSOCIATES
ARCHITECTS, INC.
631 SOUTH HULL STREET , MONTGOMERY , ALABAMA 36104 (334) 834-9933

STATE OF ALABAMA
WALTER T. McKEE, JR.
No. 1082
MONTGOMERY, ALA.
REGISTERED ARCHITECT

SHEET TITLE : DOOR AND WINDOW DETAILS

MCKEE JOB # : 22-134

DRAWN BY : VH

DATE: 10-13-2022

REVISED DATE:

REVISED DATE:

REVISED DATE:

SHEET NO. : A8.3

- Z:\2022\22-134 Classroom Addition for Union Hill School\CAD Drawings\Architectural\A8.3 Door and Window Details.dwg
- Friday, October 14, 2022 10:20:56 AM

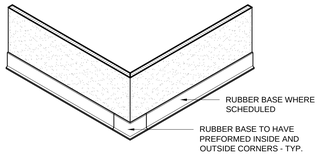

RUBBER BASE DETAIL
SCALE: 3/4" - 1'-0"

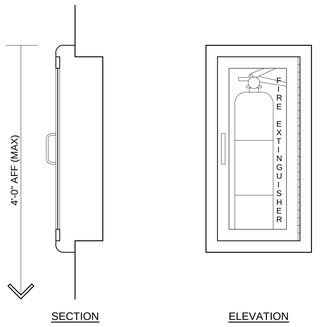

FIRE EXTINGUISHER CABINET (FEC)
SCALE: 1 1/2" - 1'-0"

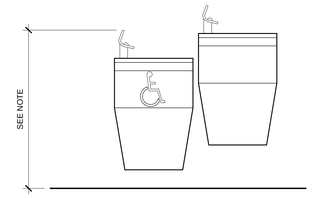

NOTE:
MOUNTING HEIGHT AT ACCESSIBLE FOUNTAIN THE SPOUT OUTLET TO BE NO MORE THAN 36" ABOVE THE FLOOR.

ELECTRIC WATER COOLER (EWC)
SCALE: 1 1/2" - 1'-0"

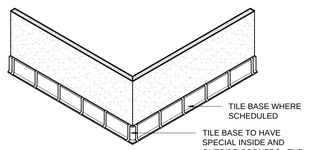

HARD TILE DETAIL
SCALE: 3/4" - 1'-0"

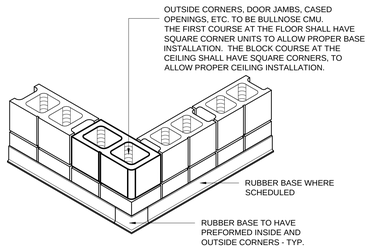

RUBBER BASE DETAIL
SCALE: 3/4" - 1'-0"

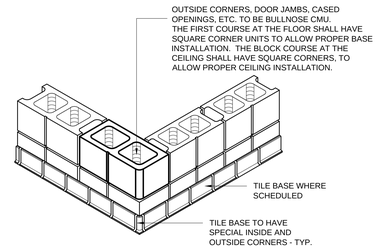

HARD TILE DETAIL
SCALE: 3/4" - 1'-0"

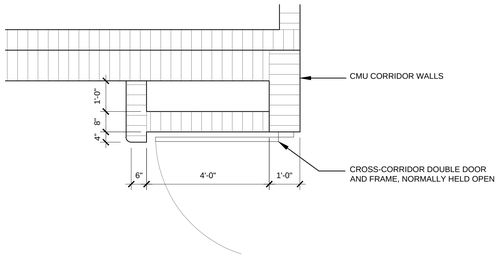

1 CROSS-CORRIDOR DOOR - PLAN DETAIL
SCALE: 1/2"=1'-0"

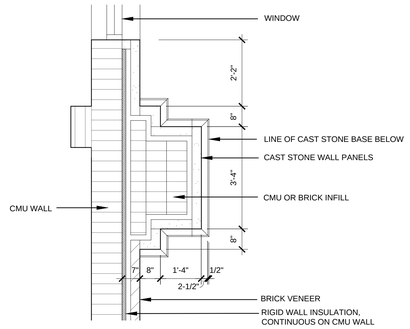

2 CAST STONE PILASTER - PLAN DETAIL
SCALE: 1/2"=1'-0"

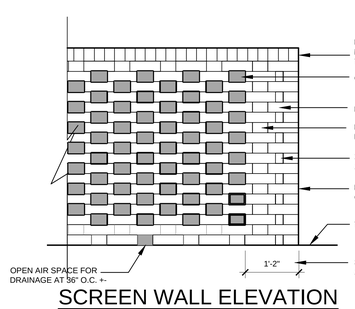

SCREEN WALL ELEVATION
SCALE: 3/4" - 1'-0"

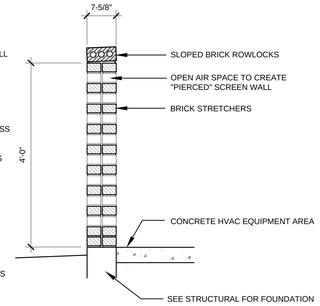

SCREEN WALL SECTION
SCALE: 3/4" - 1'-0"

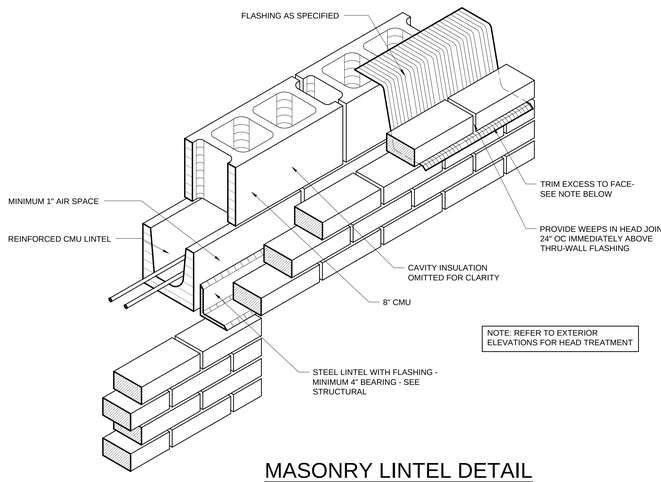

NOTE: REFER TO EXTERIOR ELEVATIONS FOR HEAD TREATMENT

MASONRY LINTEL DETAIL
SCALE: 1 1/2" - 1'-0"

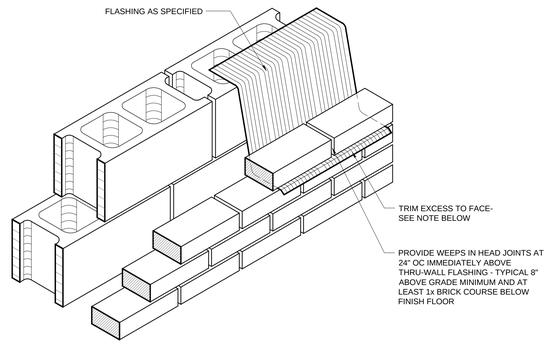

NOTE: BRICK INSTITUTE OF AMERICA TECHNICAL NOTE # 7 STATES THAT ALL FLASHING MUST EXTEND PAST THE EXTERIOR FACE OF THE MASONRY OR BE CUT FLUSH WITH THE EXTERIOR MASONRY. CUT FABRIC TYPE FLASHING FLUSH WITH THE EXTERIOR FACE OF MASONRY AFTER BEING LEFT EXPOSED FOR INSPECTION PURPOSES ONLY.

THRU-WALL FLASHING DETAIL
SCALE: 1 1/2" - 1'-0"

CLASSROOM ADDITION
FOR
UNION HILL SCHOOL
SOMERVILLE, ALABAMA
FOR THE
MORGAN COUNTY BOARD OF EDUCATION

McKEE and ASSOCIATES
ARCHITECTS, INC.
631 SOUTH HULL STREET, MONTGOMERY, ALABAMA 36104 (334) 834-9833

STATE OF ALABAMA
WALTER T. MCKEE, JR.
NO. 1882
MONTGOMERY, ALA.
REGISTERED ARCHITECT

SHEET TITLE : MISCELLANEOUS DETAILS

MCKEE JOB # : 22-134

DRAWN BY : VH

DATE: 10-13-2022

REVISED DATE:

REVISED DATE:

REVISED DATE:

SHEET NO. : A9.1

- Z:\2022\22-134 Classroom Addition for Union Hill School\CAD Drawings\Architectural\A9.1 Miscellaneous Details.dwg
- Friday, October 14, 2022 10:20:55 AM

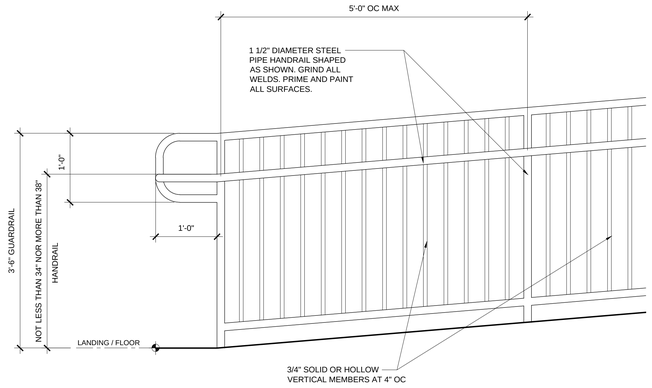

METAL GUARDRAIL WITH HANDRAIL AT RAMP (GR/HR)
SCALE: 1" - 1'-0"

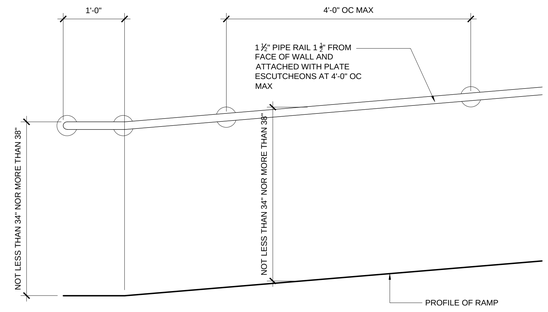

WALL MOUNTED HANDRAIL AT RAMP (WHR)
SCALE: 1" - 1'-0"

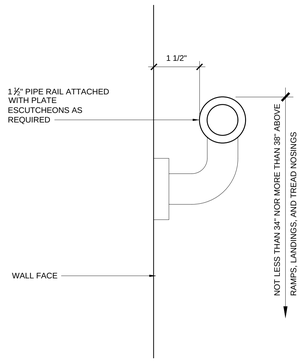

WALL MOUNTED HANDRAIL SECTION AT WALL
SCALE: 6" - 1'-0"

CODE NOTES:

1) HANDRAILS SHALL HAVE A CIRCULAR CROSS SECTION WITH AN OUTSIDE DIAMETER OF AT LEAST 1-1/4 IN. AND NOT MORE THAN 2 IN. (IBC SEC 1012.3)

2) INTERMEDIATE BALLISTERS, ORNAMENTAL PATTERNS OR PICKETS SHALL BE SPACED SUCH THAT A 4 IN. DIAMETER SPHERE SHALL NOT PASS THROUGH ANY OPENING. (IBC SEC 1013.3)

3) WALL HANDRAILS SHALL BE RETURNED TO THE WALL. THEY SHALL EXTEND HORIZONTALLY, AT THE REQUIRED HEIGHT, AT LEAST 12 IN. BEYOND THE TOP RISER AND CONTINUE TO SLOPE FOR A DEPTH OF ONE TREAD BEYOND THE FIRST RISER. (IBC SEC 1012.5)

GENERAL NOTES:

1) ALL HANDRAILS AND GUARDRAILS ARE TO BE CONSTRUCTED TO COMPLY WITH THE AMERICANS WITH DISABILITIES ACT AND THE INTERNATIONAL BUILDING CODE.

2) ALL WELDS ON METAL STAIRS AND RAILINGS ARE TO BE GROUND SMOOTH.

3) PRIME AND PAINT ALL EXPOSED STEEL OF METAL STAIRS AND RAILS.

4) FIELD VERIFY ALL CONDITIONS PRIOR TO FABRICATION. AT ALL TRANSITIONS WITH THE FLOOR, PROVIDE ESCUTCHEONS OF THE SAME MATERIAL FOR CRAFTED APPEARANCE.

5) ALL RAILING COMPOSITIONS ARE TO BE EQUALLY SPACED ALONG A CONTINUOUS RUN. THE COMPOSITIONS ARE TO BE CENTERED WITHIN EACH PANEL-TYP. SEE PLANS FOR ADDITIONAL INFO.

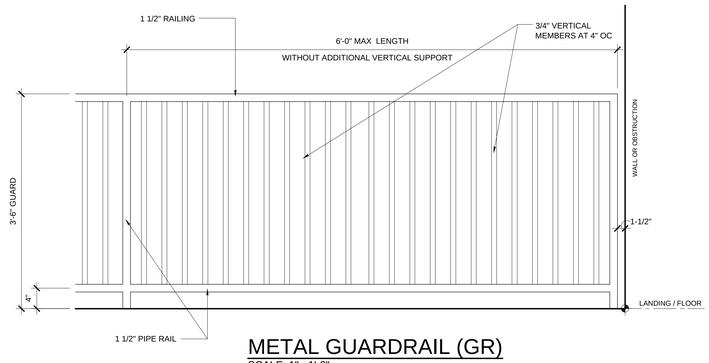

METAL GUARDRAIL (GR)
SCALE: 1" - 1'-0"

GUARD INFILL NOTES:
1. WIRE MESH TO BE EQUAL TO McNICHOLS WIRE MESH, 2" X 2" SQUARE, CARBON STEEL, WELDED, WITH MIN. 6 GAUGE WIRE.
2. MESH TO BE FRAMED IN 3/8" X 1" McNICHOLS U-EDGING, CARBON STEEL, 14 GAUGE, WITH MITERED CORNERS.
3. FRAMED UNITS TO HAVE FLAT STEEL TABS AROUND PERIMETER AS NEEDED, WELDED TO THE MESH U-EDGING FRAME AND THE STEEL PIPE RAILINGS.
4. WELDS TO BE GROUND SMOOTH.
5. PREPARE, PRIME, AND PAINT ALL SURFACES PER SPECIFICATIONS.

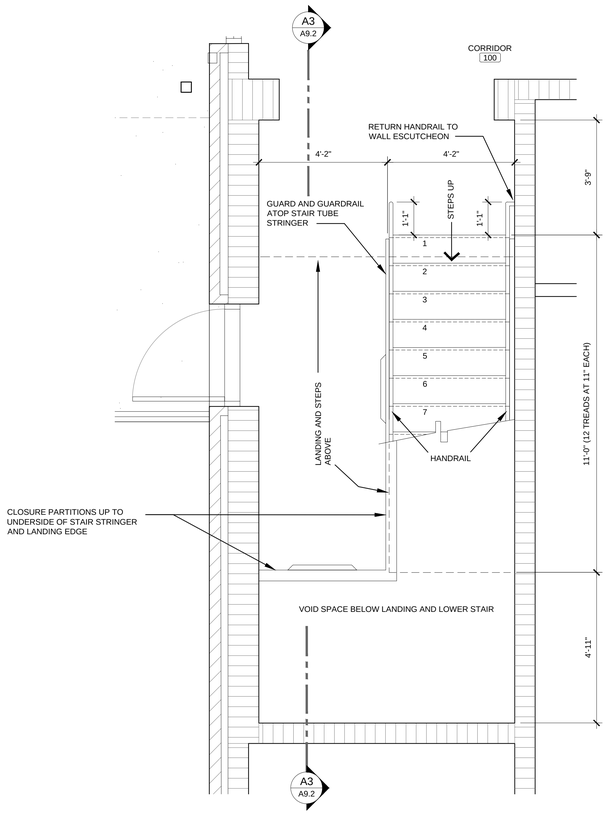

A1 STAIR A - FIRST FLOOR PLAN VIEW
SCALE: 1/2" = 1'-0"

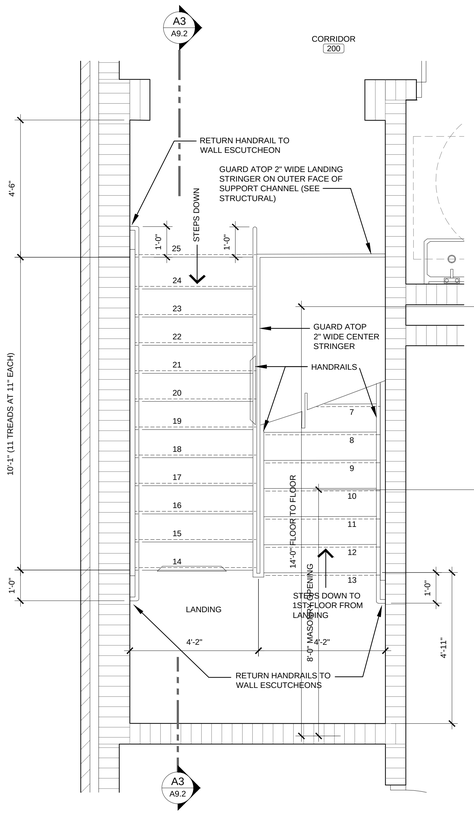

A2 STAIR A - SECOND FLOOR PLAN VIEW
SCALE: 1/2" = 1'-0"

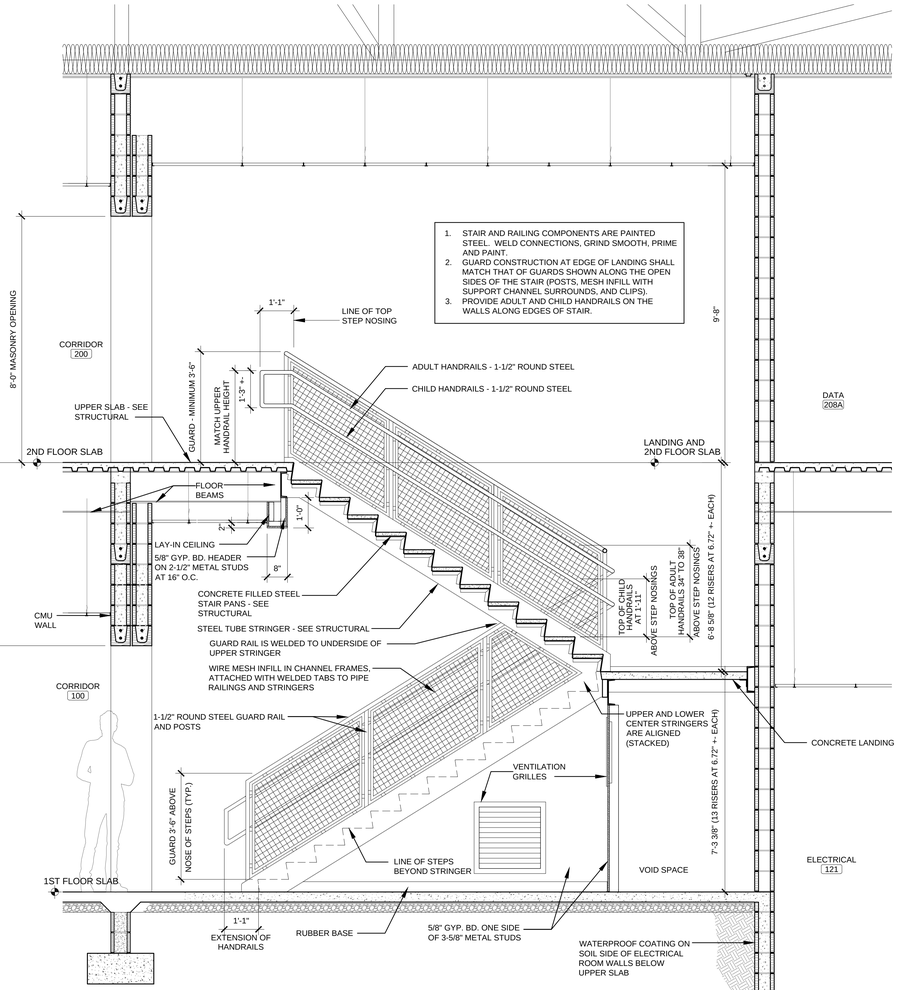

A3 STAIR A - SECTION LOOKING EAST
SCALE: 1/2" = 1'-0"

CLASSROOM ADDITION
FOR
UNION HILL SCHOOL
SOMERVILLE, ALABAMA
FOR THE
MORGAN COUNTY BOARD OF EDUCATION

McKEE and ASSOCIATES
ARCHITECTS, INC.
631 SOUTH HULL STREET, MONTGOMERY, ALABAMA 36104 (334) 834-9833

STATE OF ALABAMA
WALTER T. MCKEE, JR.
NO. 1082
MONTGOMERY, ALA.
REGISTERED ARCHITECT

SHEET TITLE : STAIR A - PLANS AND SECTION

MCKEE JOB # : 22-134

DRAWN BY : VH

DATE: 10-13-2022

REVISED DATE:

REVISED DATE:

REVISED DATE:

SHEET NO. : A9.2

- Z:\2022\22-134 Classroom Addition for Union Hill School\CAD Drawings\Architectural\A9.2 Stair Details.dwg
- Friday, October 14, 2022 10:21:31 AM

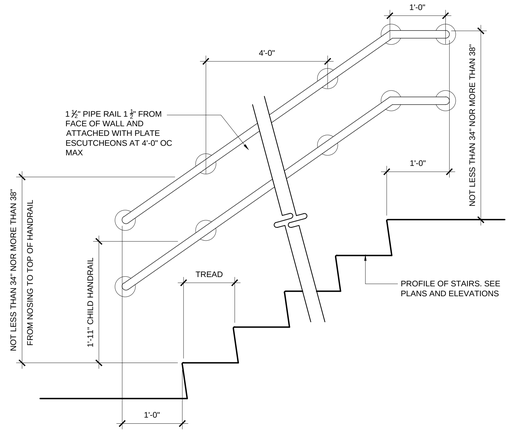

WALL MOUNTED HANDRAIL AT STEPS (WHS)

SCALE: 1" - 1'-0"

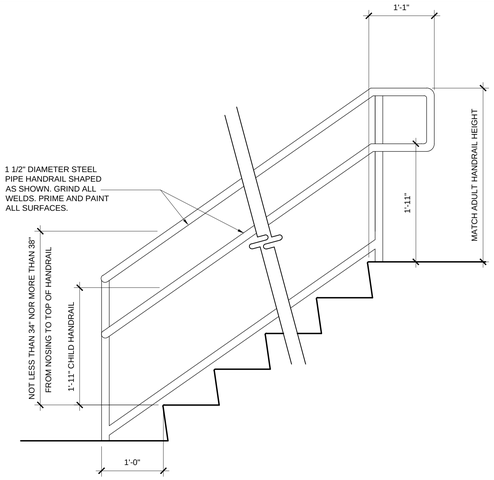

METAL HANDRAIL AT STEPS (HRS)

SCALE: 1" - 1'-0"

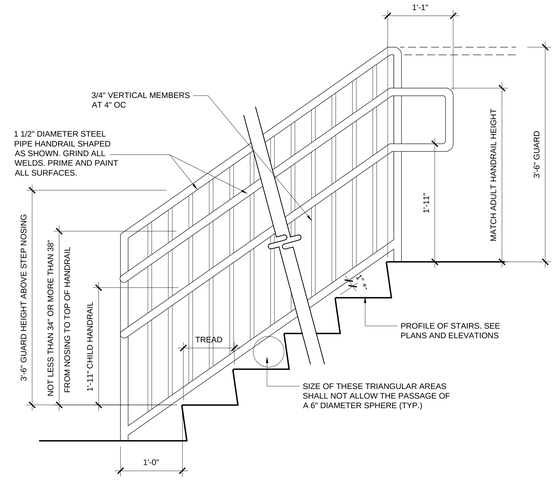

METAL GUARDRAIL / HANDRAIL AT STEPS (GR/HR)

SCALE: 1" - 1'-0"

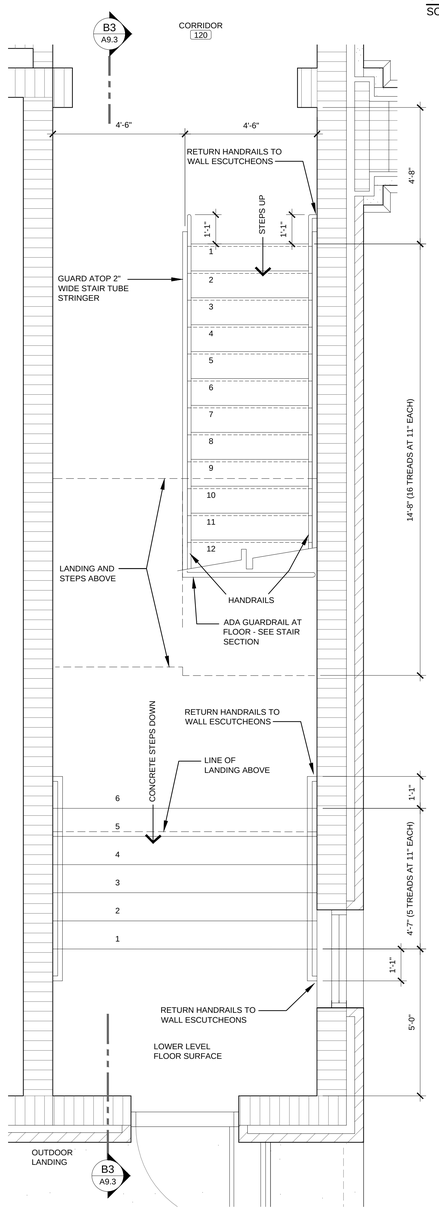

B1 STAIR B - FIRST FLOOR PLAN VIEW

SCALE: 1/2" = 1'-0"

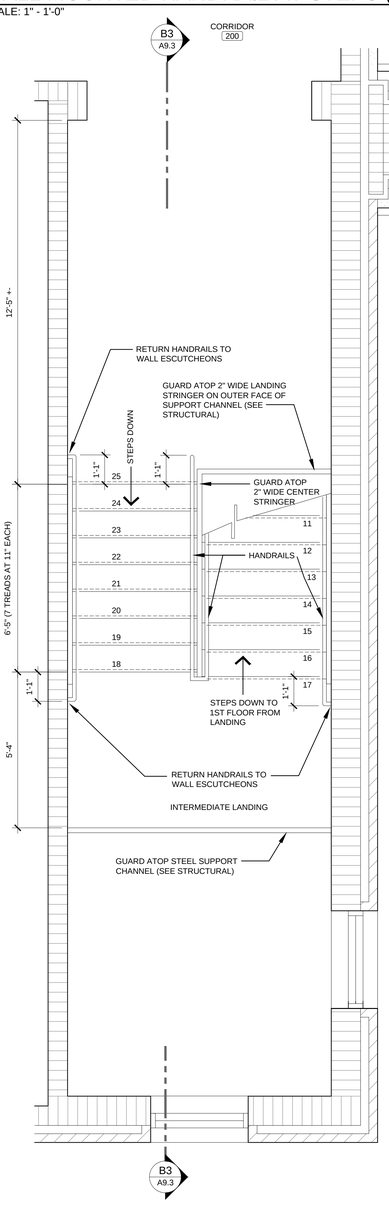

B2 STAIR B - SECOND FLOOR PLAN VIEW

SCALE: 1/2" = 1'-0"

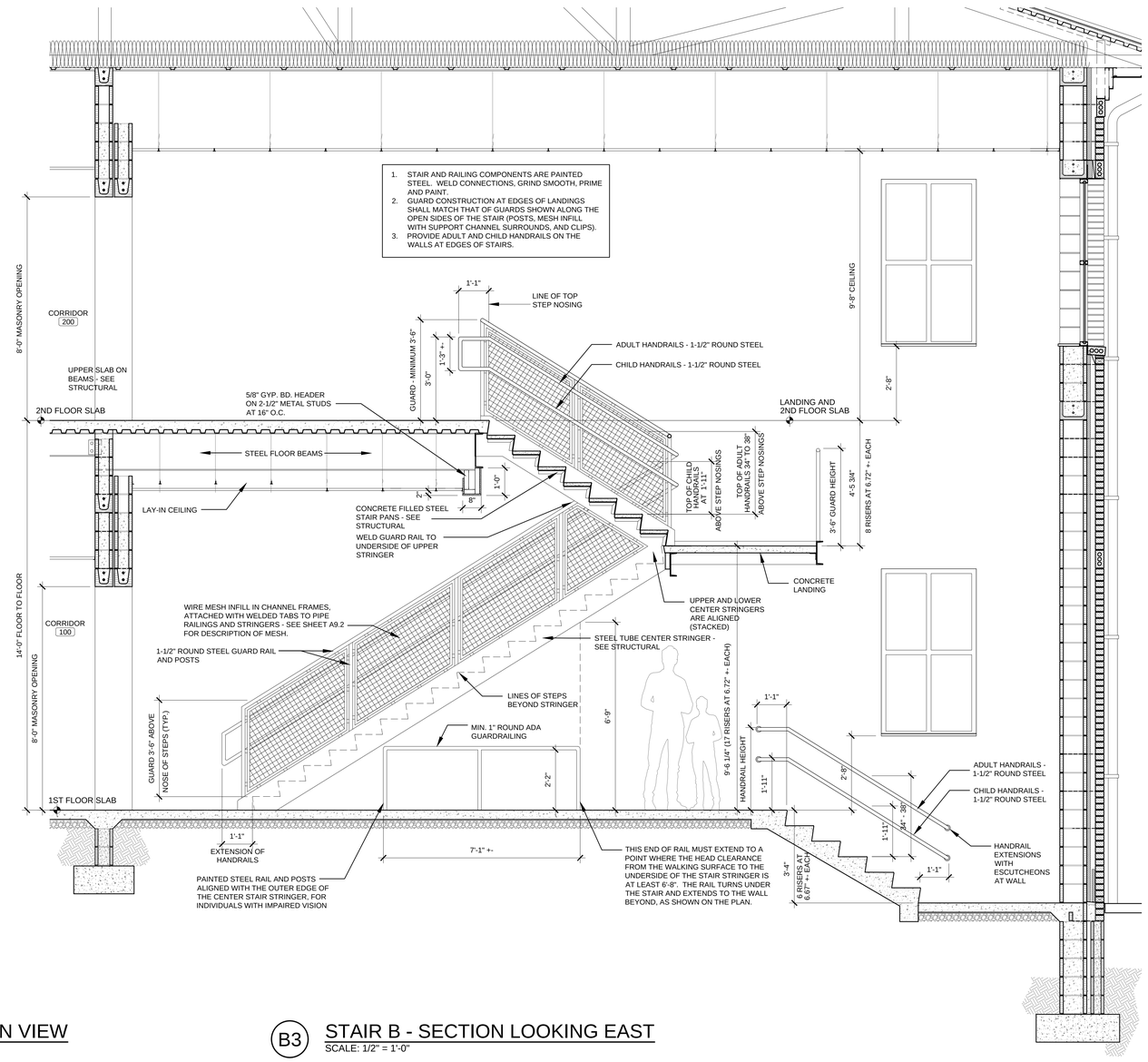

B3 STAIR B - SECTION LOOKING EAST

SCALE: 1/2" = 1'-0"

CLASSROOM ADDITION

FOR

UNION HILL SCHOOL

SOMERVILLE, ALABAMA

FOR THE

MORGAN COUNTY BOARD OF EDUCATION

McKEE and ASSOCIATES
ARCHITECTS, INC.
631 SOUTH HULL STREET , MONTGOMERY , ALABAMA 36104 (334) 834-9933

STATE OF ALABAMA — WALTER T. MCKEE, JR. — No. 10062 — MONTGOMERY, ALA. — REGISTERED ARCHITECT

SHEET TITLE :	STAIR B - PLANS AND SECTION
MCKEE JOB # :	22-134
DRAWN BY :	VH
DATE:	10-13-2022
REVISED DATE:	
REVISED DATE:	
REVISED DATE:	

SHEET NO. : A9.3

- Z:\2022\22-134 Classroom Addition for Union Hill School\CAD Drawings\Architectural\A9.2 Stair Details.dwg
- Friday, October 14, 2022 10:21:24 AM

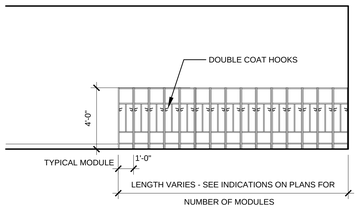

1 INTERIOR ELEVATION
SCALE: 1/4"=1'-0" STUDENT CUBBIES (SC)

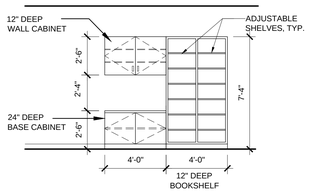

2 INTERIOR ELEVATION
SCALE: 1/4"=1'-0" CLASSROOMS

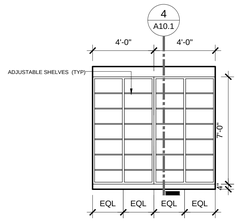

3 INTERIOR ELEVATION
SCALE: 1/4"=1'-0"
CLASSROOM SUPPLY ROOM

CONTRACTOR'S OPTION:
IN LIEU OF CASEWORK SHELVING IN THE SUPPLY ROOMS, PROVIDE ADJUSTABLE METAL SHELVING UNITS.

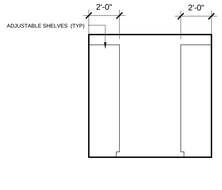

4 INTERIOR SECTION
SCALE: 1/4"=1'-0"
CLASSROOM SUPPLY ROOM

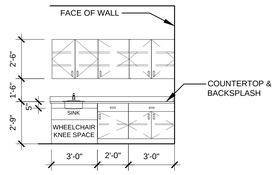

5 WORK ROOM 102
SCALE: 1/4"=1'-0"

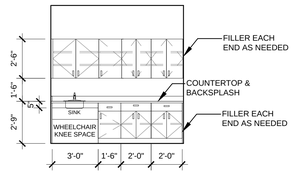

6 WORK ROOM 202
SCALE: 1/4"=1'-0"

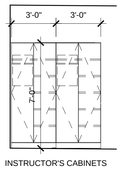

7 TEACHER'S CABINET (TC)
SCALE: 1/4"=1'-0"

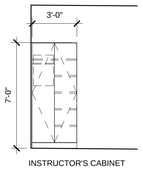

8 TEACHER'S CABINET - SINGLE (TCS)
SCALE: 1/4"=1'-0"

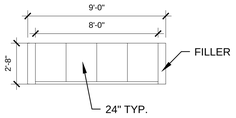

9 CLASSROOM BASE CABINETS
SCALE: 1/4"=1'-0"
24" DEEP CABINET WITH PLASTIC LAMINATE TOP

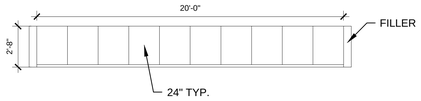

10 CLASSROOM BASE CABINETS
SCALE: 1/4"=1'-0"
24" DEEP CABINET WITH PLASTIC LAMINATE TOP

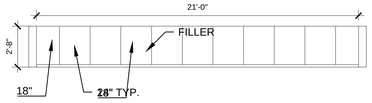

11 CLASSROOM BASE CABINETS
SCALE: 1/4"=1'-0"
24" DEEP CABINET WITH PLASTIC LAMINATE TOP

12 CLASSROOM BASE CABINETS
SCALE: 1/4"=1'-0"
24" DEEP CABINET WITH PLASTIC LAMINATE TOP

13 INTERIOR ELEVATION
SCALE: 1/4"=1'-0" CLASSROOMS

14 CLASSROOM BASE CABINETS
SCALE: 1/4"=1'-0"
24" DEEP CABINET WITH PLASTIC LAMINATE TOP

15 TEACHER'S DESK (TD) ELEVATIONS
SCALE: 1/4"=1'-0"

CLASSROOM ADDITION
FOR
UNION HILL SCHOOL
SOMERVILLE, ALABAMA
FOR THE
MORGAN COUNTY BOARD OF EDUCATION

McKEE and ASSOCIATES
ARCHITECTS, INC.
631 SOUTH HULL STREET, MONTGOMERY, ALABAMA 36104 (334) 834-9833

STATE OF ALABAMA
WALTER T. MCKEE, JR.
NO. 1882
MONTGOMERY, ALA.
REGISTERED ARCHITECT

SHEET TITLE : CASEWORK

MCKEE JOB # : 22-134

DRAWN BY : JL, VH

DATE: 10-13-2022

REVISED DATE:

REVISED DATE:

REVISED DATE:

SHEET NO. : A10.1

- Z:\2022\22-134 Classroom Addition for Union Hill School\CAD Drawings\Architectural\A10.1 Casework.dwg
- Friday, October 14, 2022 10:20:39 AM

HAZARD CLASSIFICATION LEGEND

ALL AREAS /SPACES ARE LIGHT HAZARD IN ACCORDANCE WITH NFPA 13 UNLESS NOTED OTHERWISE.

SYMBOL	DESCRIPTION
OH1	ORDINARY HAZARD GROUP 1
OH2	ORDINARY HAZARD GROUP 2
EH1	EXTRA HAZARD GROUP 1
EH2	EXTRA HAZARD GROUP 2

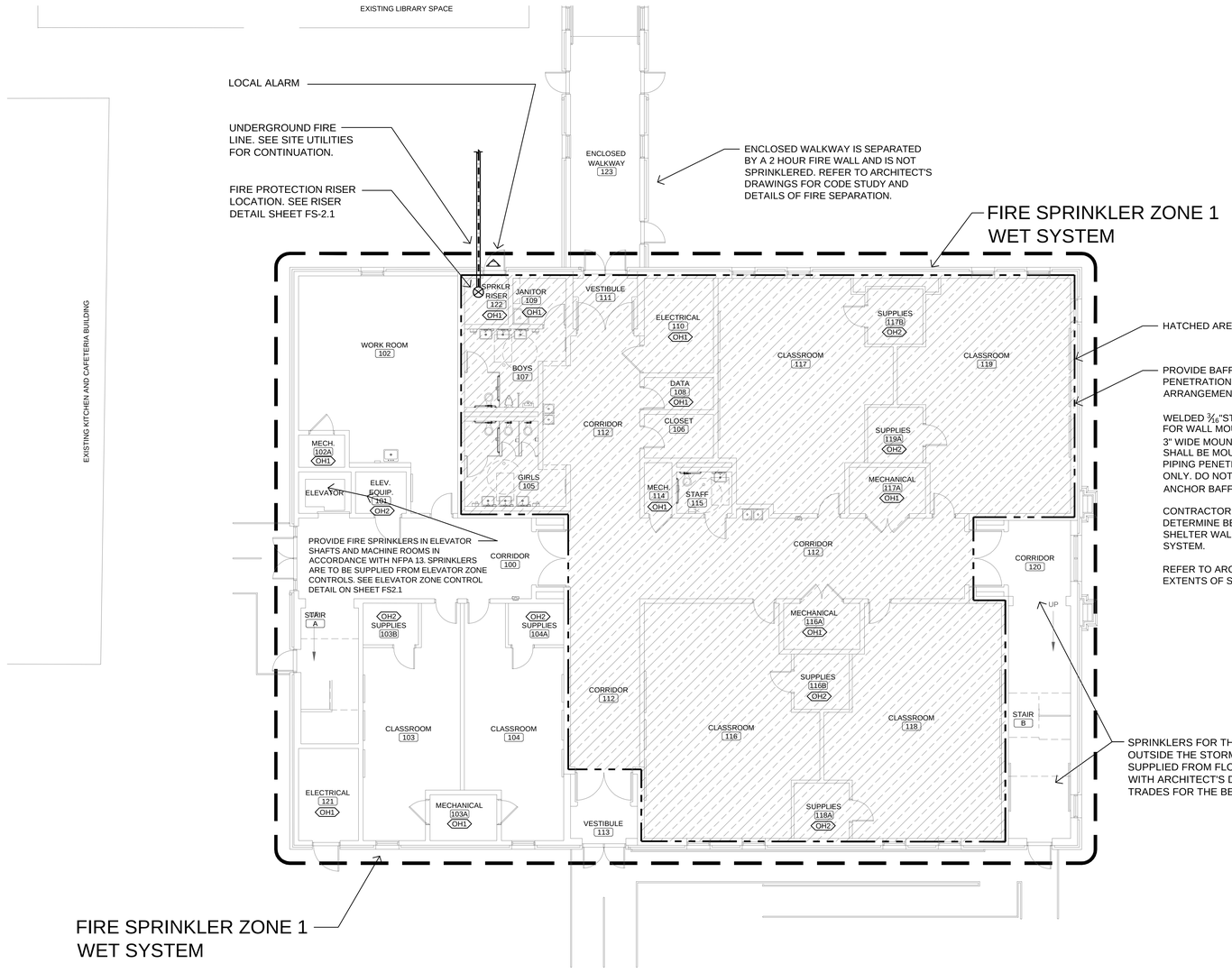

HATCHED AREA INDICATES EXTENT OF STORM SHELTER.

PROVIDE BAFFLE AT ANY/ALL SHELTER WALL/CEILING PENETRATION. SEE DETAIL SHEET FS2.1 FOR DETAIL AND ARRANGEMENT.

WELDED 3/16"STEEL BOX (BAFFLE) WITH 2 OPEN SIDES AND FLANGES FOR WALL MOUNTING. MINIMUM BOX DIMENSION = 12"x12"x36" WITH 3" WIDE MOUNTING FLANGES AND 5/8" MOUNTING HOLES. BAFFLE SHALL BE MOUNTED ON INSIDE OF SHELTER WALL OVER EACH PIPING PENETRATION. OFFSET PIPING THROUGH BOTTOM OR SIDE ONLY. DO NOT ARRANGE WITH BAFFLE OPENING ON TOP SIDE. ANCHOR BAFFLE TO WALL USING 1/2" ANCHORS.

CONTRACTOR TO COORDINATE WITH OTHER TRADES TO DETERMINE BEST ENTRY POINT INTO SHELTER. PENETRATE SHELTER WALL ONLY AS NEEDED. PREFERABLY ONCE PER SYSTEM.

REFER TO ARCHITECTURAL PLANS FOR EXACT LOCATION AND EXTENTS OF STORM SHELTER.

SPRINKLERS FOR THIS AREA OF FIRST FLOOR OUTSIDE THE STORM SHELTER TO BE SUPPLIED FROM FLOOR ABOVE. COORDINATE WITH ARCHITECT'S DRAWINGS AND OTHER TRADES FOR THE BEST POSSIBLE LOCATION.

FIRE SPRINKLER FIRST FLOOR PLAN

SCALE: 1/8" = 1'-0"

CLASSROOM ADDITION

FOR

UNION HILL SCHOOL

SOMERVILLE, ALABAMA

FOR THE

MORGAN COUNTY BOARD OF EDUCATION

McKEE and ASSOCIATES
ARCHITECTS, INC.
631 SOUTH HULL STREET , MONTGOMERY , ALABAMA 36104 (334) 834-9933

REGISTERED No. 25465 PROFESSIONAL ARCHITECT STATE OF ALABAMA RICHARD W. KING

SHEET TITLE : FIRE SPRINKLER FIRST FLOOR PLAN

MCKEE JOB # : 22-134

DRAWN BY : RS/SG

DATE: 10-13-2022

REVISED DATE:

REVISED DATE:

REVISED DATE:

SHEET NO. : FS1.1

HAZARD CLASSIFICATION LEGEND

ALL AREAS /SPACES ARE LIGHT HAZARD IN ACCORDANCE WITH NFPA 13 UNLESS NOTED OTHERWISE.

SYMBOL	DESCRIPTION
OH1	ORDINARY HAZARD GROUP 1
OH2	ORDINARY HAZARD GROUP 2
EH1	EXTRA HAZARD GROUP 1
EH2	EXTRA HAZARD GROUP 2

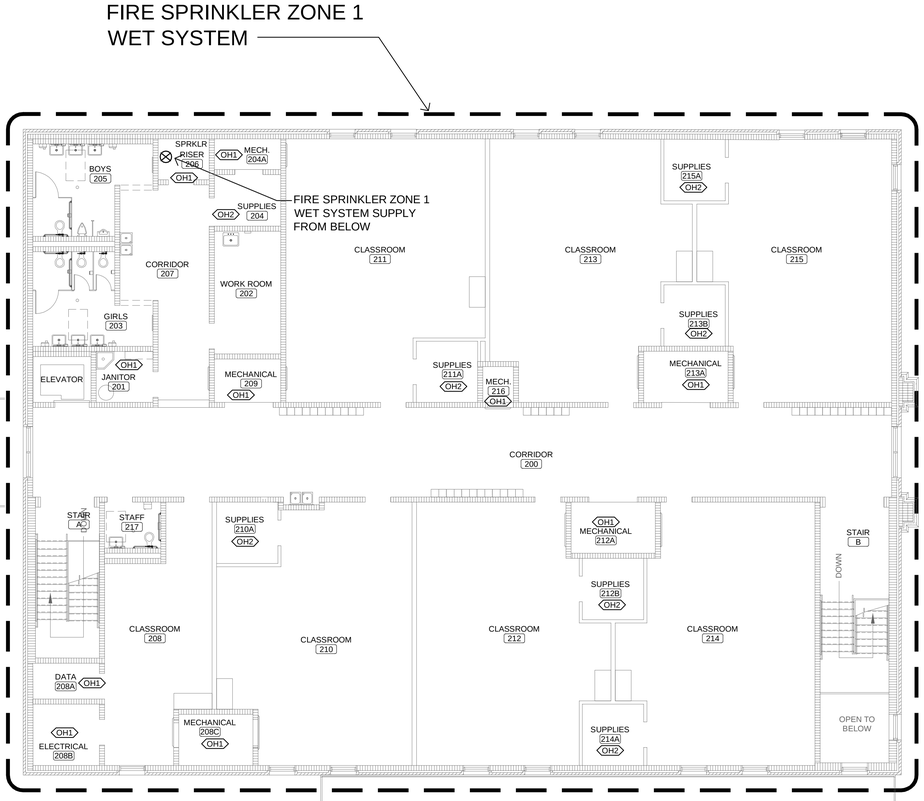

FIRE SPRINKLER SECOND FLOOR PLAN
SCALE: 1/8" = 1'-0"

CLASSROOM ADDITION
FOR
UNION HILL SCHOOL
SOMERVILLE, ALABAMA
FOR THE
MORGAN COUNTY BOARD OF EDUCATION

McKEE and ASSOCIATES
ARCHITECTS, INC.
631 SOUTH HULL STREET, MONTGOMERY, ALABAMA 36104 (334) 834-9933

SHEET TITLE : FIRE SPRINKLER SECOND FLOOR PLAN

MCKEE JOB # : 22-134

DRAWN BY : RS/SG

DATE: 10-13-2022

REVISED DATE:

REVISED DATE:

REVISED DATE:

SHEET NO. : FS1.2

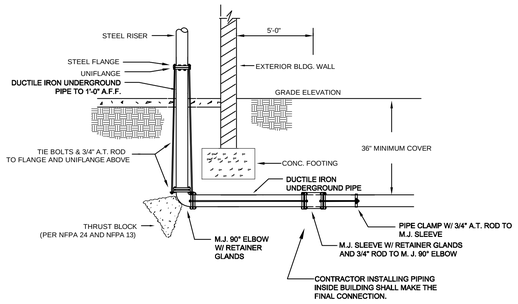

FIRE PROTECTION ENTRANCE DETAIL

NO SCALE

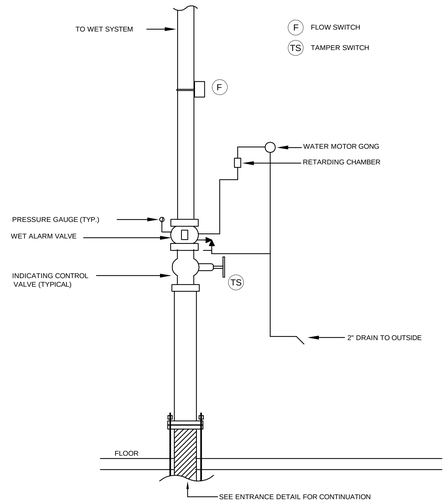

FIRE SPRINKLER ZONE 1 RISER DETAIL

NO SCALE

NOTE TO CONTRACTOR :

1. A LOW VOLTAGE ELECTRIC BELL TIED INTO THE ALARM SYSTEM MAY BE USED IN LIEU OF THE ALARM VALVE AND WATER MOTOR & GONG. IT IS THE RESPONSIBILITY OF THE SPRINKLER CONTRACTOR TO COORDINATE THIS CHANGE WITH ELECTRICAL / FIRE ALARM CONTRACTOR.

2. FIRE SPRINKLER SYSTEM BACKFLOW DEVICE AND FIRE DEPARTMENT CONNECTION TO BE LOCATED AT THE POINT OF CONNECTION TO THE PUBLIC WATER MAIN. SEE CIVIL DIVISION DOCUMENTS FOR EXACT LOCATION AND ARRANGEMENT. F.D.C. THREADS TO MATCH LOCAL FIRE DEPARTMENT.

GENERAL NOTES:

1. ALL FIRE PROTECTION STUB-INS SHALL BE 5'-0" OUTSIDE BUILDING TO 1'-0" A.F.F.
2. ALL UNDERGROUND PIPING SHALL BE INSTALLED, TESTED, AND FLUSHED PER N.F.P.A. 24 BEFORE CONNECTING TO OVERHEAD PIPING.
3. ALL MATERIALS AND INSTALLATION OF THIS AUTOMATIC SPRINKLER SYSTEM SHALL CONFORM TO N.F.P.A. 13, N.F.P.A. 101, AND/OR MANUFACTURER'S LISTING.
4. ALL OVERHEAD PIPING SHALL BE TESTED PER N.F.P.A. 13.
5. SPRINKLER SYSTEM SHALL BE PROTECTED AGAINST FREEZING.
6. LOW POINTS OF SYSTEM SHALL HAVE PROVISIONS FOR PROPER DRAINAGE.
7. ALL FERROUS - WELDED OR SEAMLESS STEEL PIPE SHALL MEET ANSI / ASTM A-53. WELDING BY CERTIFIED WELDER.
8. 24 HOUR SUPERVISION SHALL BE PROVIDED.
9. A SPARE HEAD CABINET SHALL BE PROVIDED WITH A MINIMUM OF 6 OF EACH TYPE OF SPRINKLER USED.
10. HYDRAULIC CALCULATIONS SHALL BE PERFORMED BY SPRINKLER CONTRACTOR. HYDRAULIC CALCULATIONS SHALL BE PER N.F.P.A. 13 AND BASED ON CURRENT FLOW TEST PERFORMED BY SPRINKLER CONTRACTOR.
11. CONTRACTOR SHALL VISIT SITE PRIOR TO BID TO CONDUCT & VERIFY WATER FLOW INFORMATION. CONTACT THE LOCAL WATER AUTHORITY AND/OR FIRE DEPARTMENT BEFORE PERFORMING THE TEST.
12. PLANS TO BE SUBMITTED TO STATE/LOCAL AUTHORITY, OWNER'S INSURANCE UNDERWRITER, AND ARCHITECT FOR APPROVAL.
13. SPRINKLER PIPING SHALL NOT BE ROUTED OVER ELECTRICAL PANELS OR TRANSFORMERS.
14. PROVIDE HANGERS ON ARMOVERS OVER 1'-0" LONG WHEN PRESSURE EXCEEDS 100 PSI. OTHERWISE,PROVIDE HANGERS ON ARMOVERS OVER 2'-0" LONG.
15. PROVIDE SPRINKLER HEAD GUARDS ON ALL SPRINKLERS SUBJECT TO MECHANICAL INJURY (NOTED BY H/G ON PLAN).
16. ALL SPRINKLERS SHALL BE LISTED AS QUICK RESPONSE.
17. VERIFY WITH ALL APPLICABLE CODES/STANDARDS, STATE, AND LOCAL AHJ, THE REQUIREMENTS FOR SPRINKLERS IN THE ELEVATOR IF PRESENT. COORDINATE WITH ALL OTHER TRADES THE LOCATION OF SPRINKLERS.
18. SEISMIC BRACING: REFER TO STRUCTURAL CONTRACT DOCUMENTS FOR INFORMATION REGARDING OVERALL SEISMIC DESIGN CATEGORY FOR THE BUILDING. WHERE SEISMIC DESIGN CATEGORY IS "C THROUGH "F", PROVIDE SEISMIC BRACING IN ACCORDANCE WITH 2013 EDITION OF NFPA 13. SEISMIC BRACING IS NOT REQUIRED WHERE SEISMIC DESIGN CATEGORY IS "A", OR "B".

SPRINKLER SYSTEM SCHEDULE

ROOM OR AREA	SYSTEM TYPE	OCCUPANCY CLASSIFICATION	DENSITY GPM/SQ.FT.	CALCULATED AREA SQ.FT.	GPM HOSE ALLOWANCE
CLASSROOMS, OFFICES, TOILETS CLOSETS, ETC.	WET PIPE	LIGHT	.10	1500	100
MECHANICAL, ELECTRICAL, JANITOR, UNASSIGNED, UNFINISHED, ETC.	WET PIPE	ORDINARY 1	.15	1500	250
STORAGE ROOMS, ETC.	WET PIPE	ORDINARY 2	.20	1500	250

NOTES

1. ALL AREAS, INCLUDING TOILETS AND CLOSETS, SHALL BE PROTECTED PER NFPA-13 AND ALL AUTHORITIES HAVING JURISDICTION UNLESS NOTED.
2. EXACT LOCATION OF SPRINKLERS AND PIPING SHALL BE COORDINATED WITH ARCHITECTURAL, STRUCTURAL, MECHANICAL, ELECTRICAL, AND OTHER TRADES BY SPRINKLER CONTRACTOR.
3. PIPE SIZES SHALL BE PER SPRINKLER CONTRACTOR HYDRAULIC CALCULATIONS.
4. ALL PIPING SHALL BE CONCEALED ABOVE CEILINGS, IN WALLS, AND IN PIPE CHASES. EXPOSED PIPING PERMITTED ONLY IN MECHANICAL ROOMS, OR EQUIVALENT SPACES WITHOUT DROP CEILINGS. EXPOSED PIPING IN PUBLIC SPACES SHALL BE PAINTED. COLOR TO BE SPECIFIED BY OWNER.

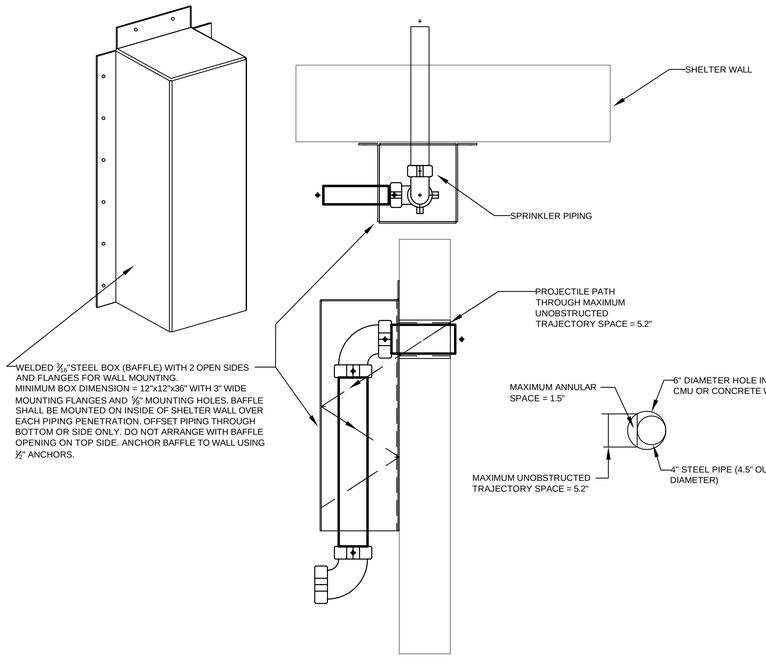

TYPICAL STORM SHELTER PIPE ENTRY/EXIT DETAIL

NO SCALE

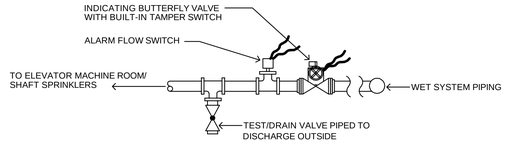

TYPICAL ELEVATOR SHAFT/MACHINE ROOM SPRINKLER CONTROL VALVE DETAIL

NO SCALE

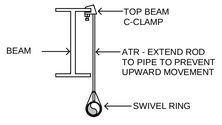

HANGER DETAIL

NO SCALE

NOTE : ALL HANGER ASSEMBLIES TO BE U.L. LISTED

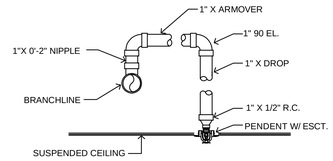

TYP. RETURN BEND ASSEMBLY

NO SCALE

NOTE : ALL SPRINKLERS IN LAY-IN CEILINGS TO BE CENTERED BOTH WAYS

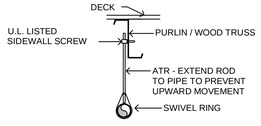

HANGER DETAIL

NO SCALE

NOTE : ALL HANGER ASSEMBLIES TO BE U.L. LISTED

CLASSROOM ADDITION
FOR
UNION HILL SCHOOL
SOMERVILLE, ALABAMA
FOR THE
MORGAN COUNTY BOARD OF EDUCATION

McKEE and ASSOCIATES
ARCHITECTS, INC.
631 SOUTH HULL STREET, MONTGOMERY, ALABAMA 36104 (334) 834-9933

SHEET TITLE : FIRE SPRINKLER NOTES & DETAILS

MCKEE JOB # : 22-134

DRAWN BY : RS/SG

DATE: 10-13-2022

REVISED DATE:

REVISED DATE:

REVISED DATE:

SHEET NO. : FS2.1

PLUMBING FIXTURE SCHEDULE

NO.	FIXTURE	WASTE	C.W.	H.W.	REMARKS
P1	WATER CLOSET	3"	1"	---	FL. MTD. - REG.
P2	ADA WATER CLOSET	3"	1"	---	FL. MTD. - ADA
P3	URINAL	2"	3/4"	---	WALL HUNG - SEE ARCH. PLANS FOR MOUNTING HEIGHT
P4	ADA LAVATORY **	1 1/4"	1/2"	1/2"	WALL HUNG - SEE ARCH. PLANS FOR MOUNTING HEIGHT
P5	MOP BASIN	3"	1/2"	1/2"	FL. MTD. CORNER TYPE
P6	SPLIT LEVEL EWC	1 1/2"	1/2"	---	WALL HUNG - HIGH/LOW
P7	SINK	1 1/2"	1/2"	1/2"	1-COMP. MTD. IN COUNTER
T.P.	TRAP PRIMER	---	1/2"	---	CONNECT TO FLOOR DRAIN AS SPECIFIED

** PROVIDE A WATER TEMPERATURE LIMITING DEVICE EQUAL TO SYMMONS #5-210-OK (ASSE STD. 1070) WITH 1/2" TEMPERED WATER LINE TO FAUCET.

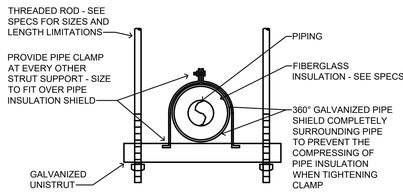

TYPICAL UNISTRUT HANGER DETAIL

NO SCALE

NOTES:
1. HANGER SPACING TO BE AS SPECIFIED.

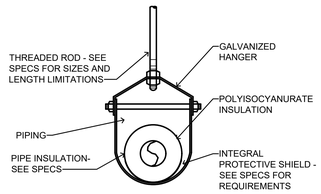

TYPICAL PIPE HANGER DETAIL

NO SCALE

NOTES:
1. HANGER SPACING TO BE AS SPECIFIED.
2. MANUFACTURER'S SADDLE LABEL WITH LOGO STICKER SHALL BE APPLIED TO EACH SADDLE AND SHALL BE VISIBLE FOR VERIFICATION OF PROPER INSTALLATION.

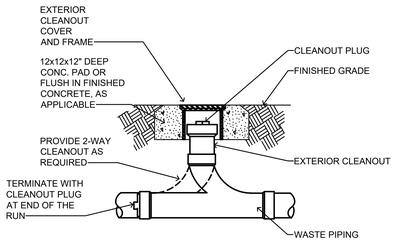

TYP. EXTERIOR CLEANOUT DETAIL

NO SCALE

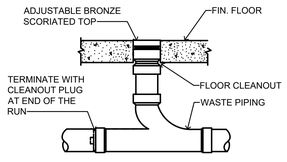

TYP. FLOOR CLEANOUT DETAIL

NO SCALE

GENERAL PLUMBING NOTES

1. ROUGH IN WATER CLOSET AND URINAL FLUSH VALVE SO THAT THE FLUSH TUBE IS VERTICALLY STRAIGHT.
2. ADA FIXTURES AND INSTALLATION SHALL COMPLY WITH CURRENT ADA STANDARDS FOR ACCESSIBLE DESIGN.
3. FLUSH VALVE HANDLE FOR ALL MANUAL FLUSH WATER CLOSETS SHALL BE LOCATED ON THE WIDE SIDE OF THE TOILET STALL AS REQUIRED BY CURRENT ADA STANDARDS FOR ACCESSIBLE DESIGN.
4. ROUGH-IN ADA WATER CLOSETS 18" FROM FINISHED WALL TO CENTERLINE OF THE WATER CLOSET. MEASURE FROM FACE OF SHORT SIDE OF THE STALL TO THE FINISHED WALL.
5. PROVIDE A CAST IRON DEEP SEAL P-TRAP FOR EACH FLOOR DRAIN AND HUB DRAIN.
6. ROUTE ALL OVERHEAD WATER PIPING AND WATER PIPING WITHIN NON-MASONRY WALLS WITHIN THE BUILDING INSULATION ENVELOPE.
7. ALL WATER PIPING WITHIN MASONRY WALLS SHALL BE INSULATED AS SPECIFIED.
8. ALL WATER PIPING INSTALLED IN EXTERIOR WALLS SHALL BE LOCATED ON THE INTERIOR SIDE OF THE BUILDING EXTERIOR WALL INSULATION
9. COORDINATE ALL PIPING RUNS WITH THE ELECTRICAL PLANS AND THE ELECTRICAL CONTRACTOR. DO NOT ROUTE ANY PIPING OVER ELECTRICAL PANELS, TRANSFORMERS, SWITCHGEAR, ETC. MAINTAIN CLEARANCES AS REQUIRED BY RESPECTIVE CODES.
10. ALL PIPING AND FITTINGS ROUTED IN/THROUGH RETURN AIR PLENUMS, RETURN AIR PLATFORMS, OR FIRE RATED PARTITIONS AND ENCLOSURES SHALL BE CAST IRON OR PVDF. SEE SPECS.
11. PLUMBING VENTS SHALL TERMINATE A MINIMUM OF 10'-0" DISTANCE FROM ALL HVAC OUTSIDE AIR INTAKES.
12. PROVIDE A READILY ACCESSIBLE CLEANOUT AT OR NEAR THE BASE OF EACH WASTE AND VENT STACK PER INTERNATIONAL PLUMBING CODE AND THE SPECIFICATIONS. LOCATE TO THE SIDE OF THE WATER CLOSETS WITH A MINIMUM CLEARANCE OF 6" FROM THE ROUGH-IN OF THE WATER CLOSETS. PREFERRED LOCATION IS IN ADA STALL TO ALLOW FOR ADDITIONAL ACCESS SPACE.
13. WATER SUPPLY SYSTEM IS DESIGNED FOR A STATIC PRESSURE OF 50 TO 75 PSI. GAUGE WATER SUPPLY PRESSURE AND VERIFY PRESSURE IS WITHIN THE SPECIFIED LIMITS. PROVIDE WATER PRESSURE REDUCING VALVE AS REQUIRED TO MAINTAIN WATER PRESSURE WITHIN DESIGN LIMITS.
14. PROVIDE A BALL VALVE ON EACH SIDE OF EVERY DIELECTRIC UNION TO FACILITATE ITS REMOVAL.
15. TOPS OF ALL OUTSIDE CLEANOUTS SHALL BE FLAT AND BROUGHT TO GRADE AND FINISHED FLUSH IN 12x12x12 CONCRETE PAD.
16. ALL INTERIOR AND EXTERIOR WALL HYDRANTS AND HOSE BIBBS SHALL BE LOCATED 24" A.F.F. COORDINATE FINAL HEIGHT OF INDOOR WALL HYDRANTS WITH ARCHITECTURAL CABINET PLANS PRIOR TO ROUGHING IN.
17. WATER HAMMER ARRESTORS SHALL BE INSTALLED AT ALL SOLENOID, REMOTE OPERATED OR QUICK CLOSING VALVES AND AT EACH PLUMBING FIXTURE OR BATTERY OF PLUMBING FIXTURES. SEE SPECS FOR ADDITIONAL REQUIREMENTS.
18. ALL HUB DRAINS THAT RISE THROUGH RETURN AIR PLATFORMS SHALL BE INSULATED CAST IRON, SHALL BE TERMINATED TO 6" ABOVE THE RETURN AIR PLATFORM AND SEALED AIR TIGHT. COORDINATE REQUIREMENT WITH MECHANICAL CONTRACTOR.
19. ALL PIPING WITH VALVES AND OTHER ITEMS THAT MAY REQUIRE MAINTENANCE, SERVICE OR REPLACEMENT, SHALL BE LOCATED NO MORE THAN 18" ABOVE THE FINISHED CEILING AND NO MORE THAN 14'-0" ABOVE FINISH FLOOR IN AREAS WITHOUT CEILINGS, TO ENSURE PROPER ACCESS. PROVIDE DROPS IN PIPING AS REQUIRED FOR COMPLIANCE.

LEGEND

	WASTE PIPE
	VENT PIPE
	COLD WATER PIPE
	HOT WTR. PIPE (125°)
	HOT WTR. RECIRC. PIPE
G	GAS PIPE
S	STORM WATER PIPE
AR	ACID RESIST. WASTE PIPE
AR	ACID RESIST. VENT PIPE
	UNION
	GATE VALVE
	CHECK VALVE
	BALL VALVE
B.V.	BALL VALVE
C.I.	CAST IRON
C.O.	CLEANOUT
D.S.	DOWNSPOUT
FCO	FLOOR CLEANOUT
F.D.	FLOOR DRAIN
M.F.D.	MECH. FLOOR DRAIN
K.F.D.	KITCHEN FLOOR DRAIN
F.S.	FLOOR SINK
G.V.	GATE VALVE
H/C	HANDICAPPED
H.D.	HUB DRAIN
H.B.	HOSE BIBS
W.H.	WALL HYDRANT
R.D.	ROOF DRAIN
T.P.	TRAP PRIMER
V	VENT
VS	VENT STACK
VTR	VENT THRU ROOF
VSTR	VENT STACK THRU ROOF
VSTW	VENT STACK THRU WALL
W&V	WASTE AND VENT
	INDICATES POINT OF CONNECTION TO EXISTING
	INDICATES POINT OF CONNECTION TO OUTSIDE UTILITY. SEE CIVIL DWGS..

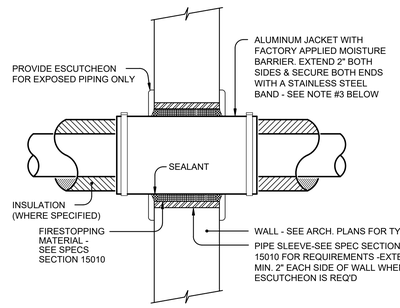

INTERIOR WALL PIPE PENETRATION DETAIL

NOT TO SCALE

NOTES:
1. DETAIL APPLIES TO ALL PIPING ABOVE AND BELOW THE CEILING.
2. AT GYPSUM BOARD WALLS, PROVIDE MINIMUM 16 GA. GALVANIZED STEEL SLEEVE WITH LOCKING TYPE LONGITUDINAL SEAM
3. OMIT ALUMINUM JACKET IF PIPING IS UNINSULATED.
4. ONLY ONE PIPE PER SLEEVE ALLOWED

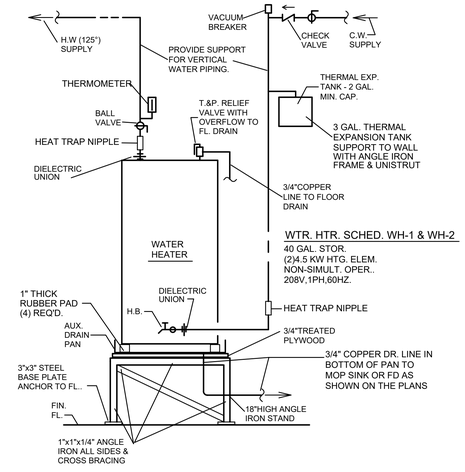

WATER HEATER DETAIL

NO SCALE

NOTE: PREFABRICATED WATER HEATER STANDS ARE NOT ALLOWED

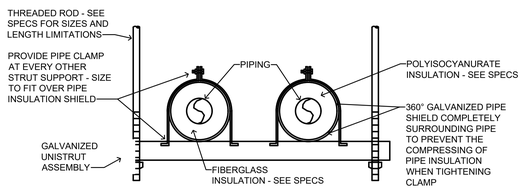

TYPICAL MULTIPLE PIPES HANGER DETAIL

NO SCALE

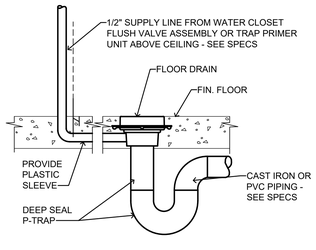

TRAP PRIMER DETAIL

NO SCALE

1. STANCOR MODEL SE-50 SUBMERSIBLE EFFLUENT PUMP, 50 GPM, 1/2 HP, 115V,1PH,60HZ., 3500 RPM, 2"DICHARGE CONNECTION.
2. TWO NEMA 4 SOLENOID VALVES WITH 115 VOLT ACTUATORS, ONE SECOND ACTUATION TIME.
3. STANCOR SIMPLEX OIL MINDER 115V,1PH, CONTROL SYSTEM WITH OPTIONAL BUILT-IN AUDIBLE AND VISUAL ALARM WHEN PUMP DOES RUN DUE TO OIL IN PIT OR HIGH LIQUID ALARM. PROVIDE SILENCING BUTTON FOR AUDIBLE ALARM BUILT INTO PANEL. PANEL SHALL HAVE ADDITIONAL CONTACT FOR A REMOTE ALARM LOCATION. OPTIONAL JUNCTION BOX CAN BE PROVIDED WITH DIN RAIL MOUNTED TERMINALS FOR FIELD HARD WIRING.
5. ALL BURIED PUMP PRESSURE DISCHARGE PIPING SHALL BE PROTECTED WITH TAPECOAT CT CORROSION PROTECTION TAPE.
6. OIL MINDER POWER CABLE, PROBE CABLE AND HIGH LIQUID ALARM CABLE.
7. HIGH LIQUID ALARM FLOAT WITH CLAMP DEVICE TO MOUNT TO PUMP DISCHARGE PIPING.
8. OIL HOLDING TANK SHALL BE A VERTICAL FIBERGLASS TANK WITH A 55 GALLON CAPACITY WITH BOLT DOWN TOP. APPROX. 20" DIA. X 54" TALL.

ITEMS 1, 2, 3, 6 AND 7 PROVIDED BY STANCOR.
EQUAL PRODUCT BY LIBERTY PUMPS.

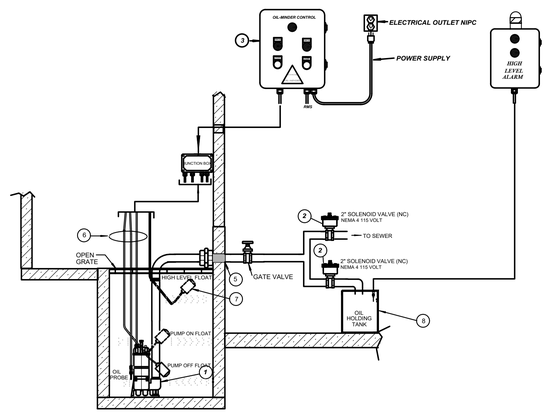

ELEVATOR SUMP PUMP/OIL TANK PIPING DIAGRAM

NO SCALE

ZGOUVAS, EIRING & ASSOCIATES
CONSULTING ENGINEERS
800 S McDONOUGH STREET
MONTGOMERY, AL. 36104
334.263.4406
ZEA PROJECT NUMBER 22-170

THE INFORMATION CONTAINED IN THIS DRAWING IS COPYRIGHTED MATERIAL AND SHALL NOT BE REPRODUCED, DIGITIZED, OR REVISED, IN WHOLE OR IN PART, WITHOUT THE WRITTEN CONSENT OF ZGOUVAS, EIRING AND ASSOCIATES

CLASSROOM ADDITION
FOR
UNION HILL SCHOOL
SOMERVILLE, ALABAMA
FOR THE
MORGAN COUNTY BOARD OF EDUCATION

McKEE and ASSOCIATES
ARCHITECTS, INC.
631 SOUTH HULL STREET, MONTGOMERY, ALABAMA 36104 (334) 834-9933

ALABAMA REGISTERED No. 23369 PROFESSIONAL ENGINEER 10.13.22 JAMES T. ZGOUVAS

SHEET TITLE : PLBG. SCHEDULES AND DETAILS

MCKEE JOB # : 22-134

DRAWN BY : C. WARD

CHECKED BY : T. ZGOUVAS

DATE: 10.13.2022

REVISED DATE:

REVISED DATE:

REVISED DATE:

SHEET NO. : P1

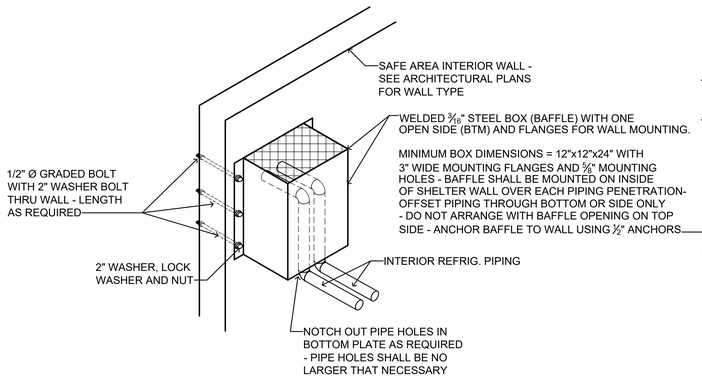

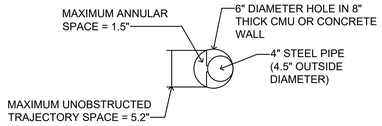

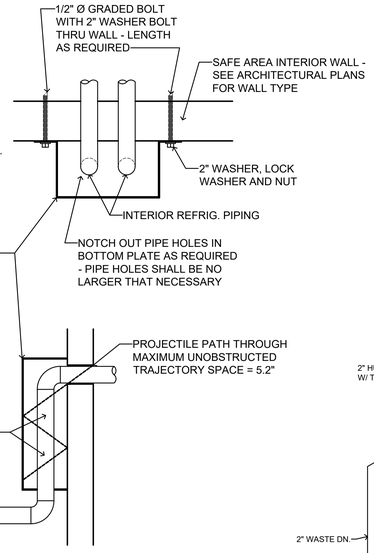

SAFE AREA PIPING PROTECTION WALL PENETRATION DETAIL

NOT TO SCALE

NOTES:
1. ALL ATTACHMENTS, ANCHORS, BOLTS, ETC., USED IN ATTACHING ITEMS TO THE SAFE ROOM WALL SHALL BE COORDINATED WITH, SUBMITTED TO, AND APPROVED BY THE STRUCTURAL ENGINEER BEFORE INSTALLATION
2. PENETRATIONS OF THE SAFE ROOM AREA WHICH ARE 2" Ø OR LESS DO NOT REQUIRE PROTECTION AS INDICATED ABOVE

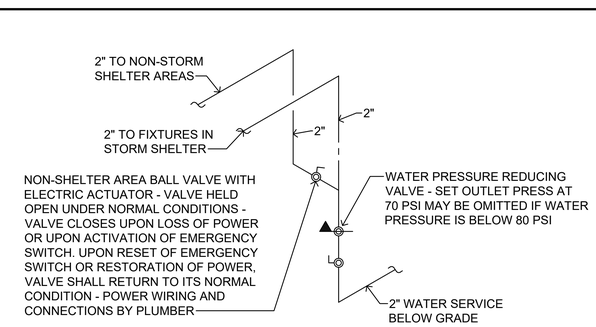

DETAIL OF PIPING AT DOMESTIC WATER SERVICE

NO SCALE

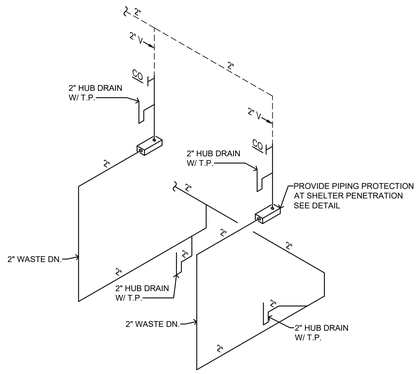

WASTE RISER WR-2

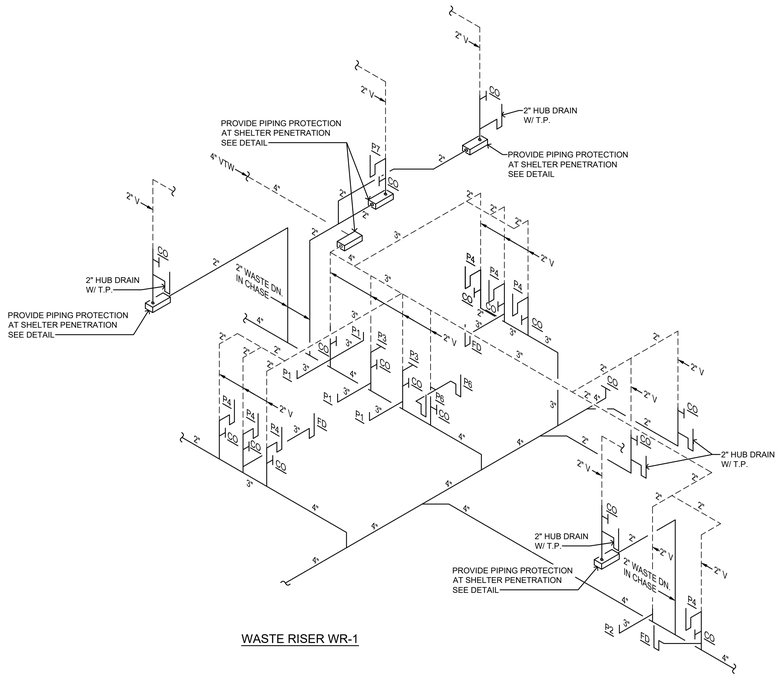

WASTE RISER WR-1

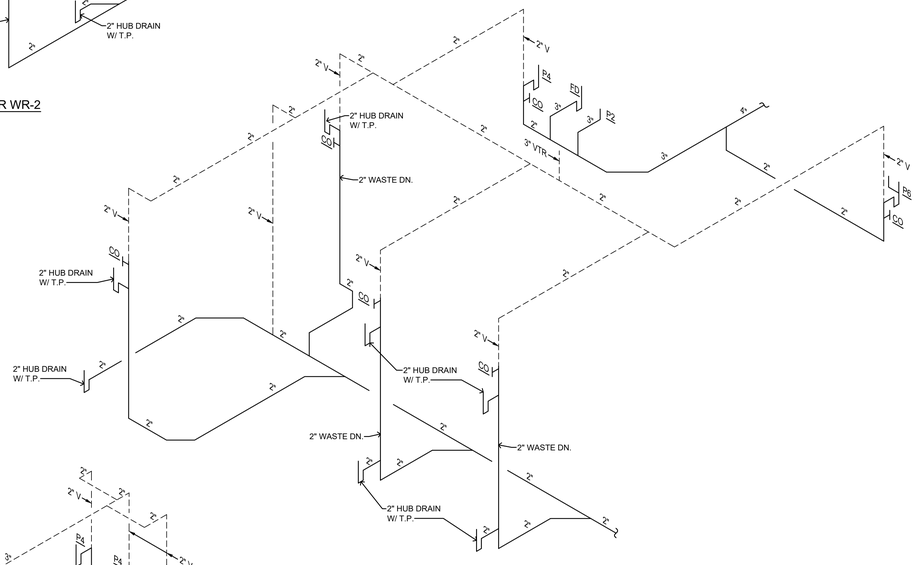

WASTE RISER WR-3

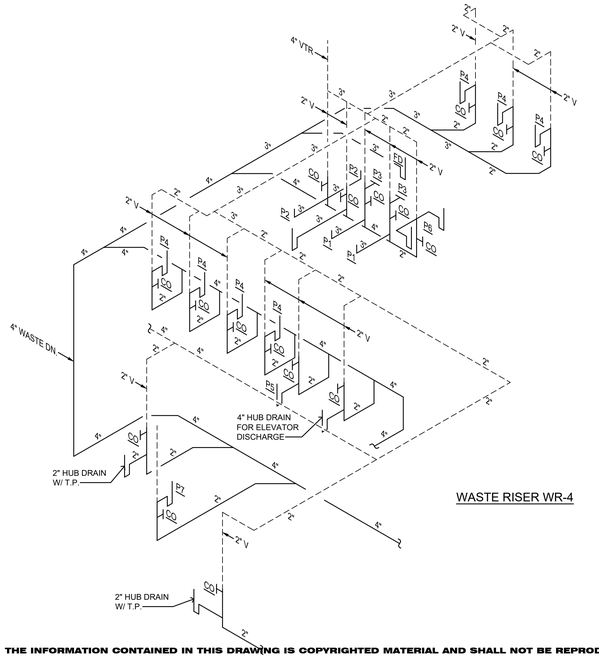

WASTE RISER WR-4

THE INFORMATION CONTAINED IN THIS DRAWING IS COPYRIGHTED MATERIAL AND SHALL NOT BE REPRODUCED, DIGITIZED, OR REVISED, IN WHOLE OR IN PART, WITHOUT THE WRITTEN CONSENT OF ZGOUVAS, EIRING AND ASSOCIATES

CLASSROOM ADDITION
FOR
UNION HILL SCHOOL
SOMERVILLE, ALABAMA
FOR THE
MORGAN COUNTY BOARD OF EDUCATION

McKEE and ASSOCIATES
ARCHITECTS, INC.
631 SOUTH HULL STREET, MONTGOMERY, ALABAMA 36104 (334) 834-9933

JAMES R. EIRING
No. 23369
PROFESSIONAL
10.13.22
ENGINEER
ALABAMA

SHEET TITLE :	PLBG. DETAILS AND RISERS
MCKEE JOB # :	22-134
DRAWN BY :	C. WARD
CHECKED BY :	T. ZGOUVAS
DATE:	10.13.2022
REVISED DATE:	
REVISED DATE:	
REVISED DATE:	

ZEA
ZGOUVAS, EIRING & ASSOCIATES
CONSULTING ENGINEERS
900 S McDONUCH STREET
MONTGOMERY, AL. 36104
334.263.4406
ZEA PROJECT NUMBER 22-170

SHEET NO. : P2

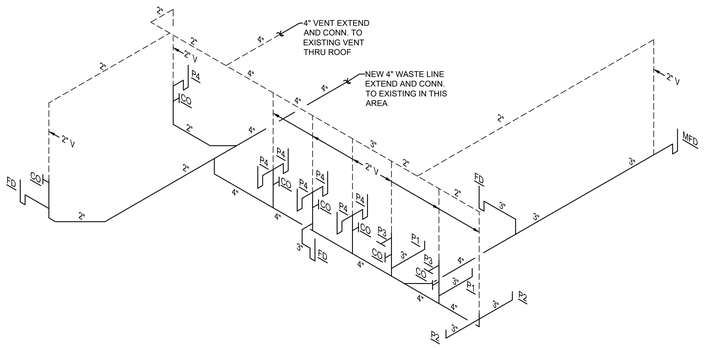

WASTE RISER WR-5

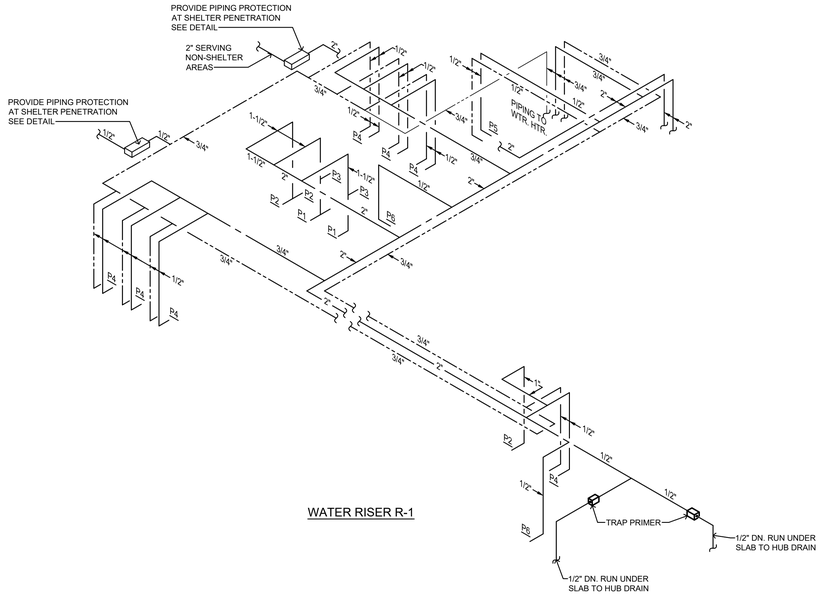

WATER RISER R-1

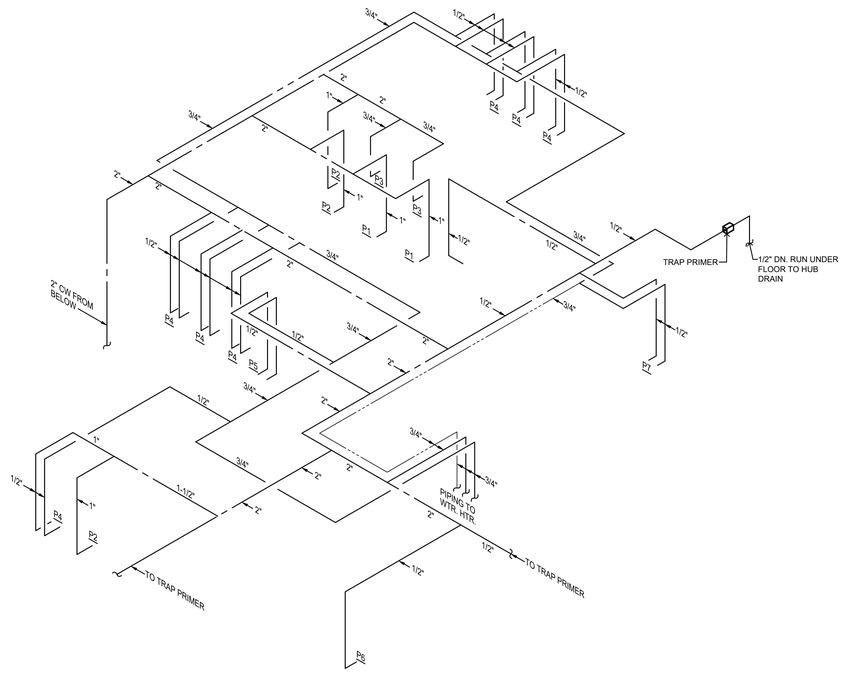

WATER RISER R-2

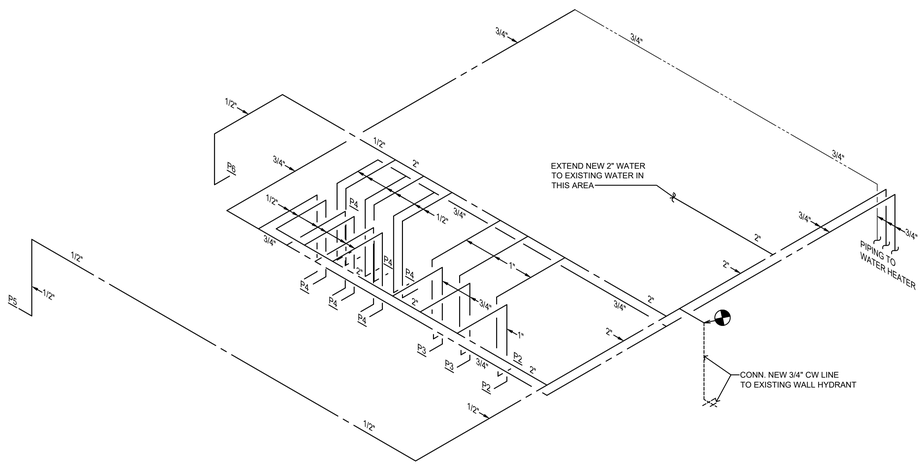

WATER RISER R-3

CLASSROOM ADDITION
FOR
UNION HILL SCHOOL
SOMERVILLE, ALABAMA
FOR THE
MORGAN COUNTY BOARD OF EDUCATION

McKEE and ASSOCIATES
ARCHITECTS, INC.
631 SOUTH HULL STREET, MONTGOMERY, ALABAMA 36104 (334) 834-9933



SHEET TITLE : PLBG RISERS

MCKEE JOB # : 22-134

DRAWN BY : C. WARD
CHECKED BY : T. ZGOUVAS

DATE: 10.13.2022

REVISED DATE:

REVISED DATE:

REVISED DATE:

ZGOUVAS, EIRING & ASSOCIATES
CONSULTING ENGINEERS
800 S McDONOUGH STREET
MONTGOMERY, AL. 36104
334.263.4406
ZEA PROJECT NUMBER 22-170

SHEET NO. : P3

THE INFORMATION CONTAINED IN THIS DRAWING IS COPYRIGHTED MATERIAL AND SHALL NOT BE REPRODUCED, DIGITIZED, OR REVISED, IN WHOLE OR IN PART, WITHOUT THE WRITTEN CONSENT OF ZGOUVAS, EIRING AND ASSOCIATES

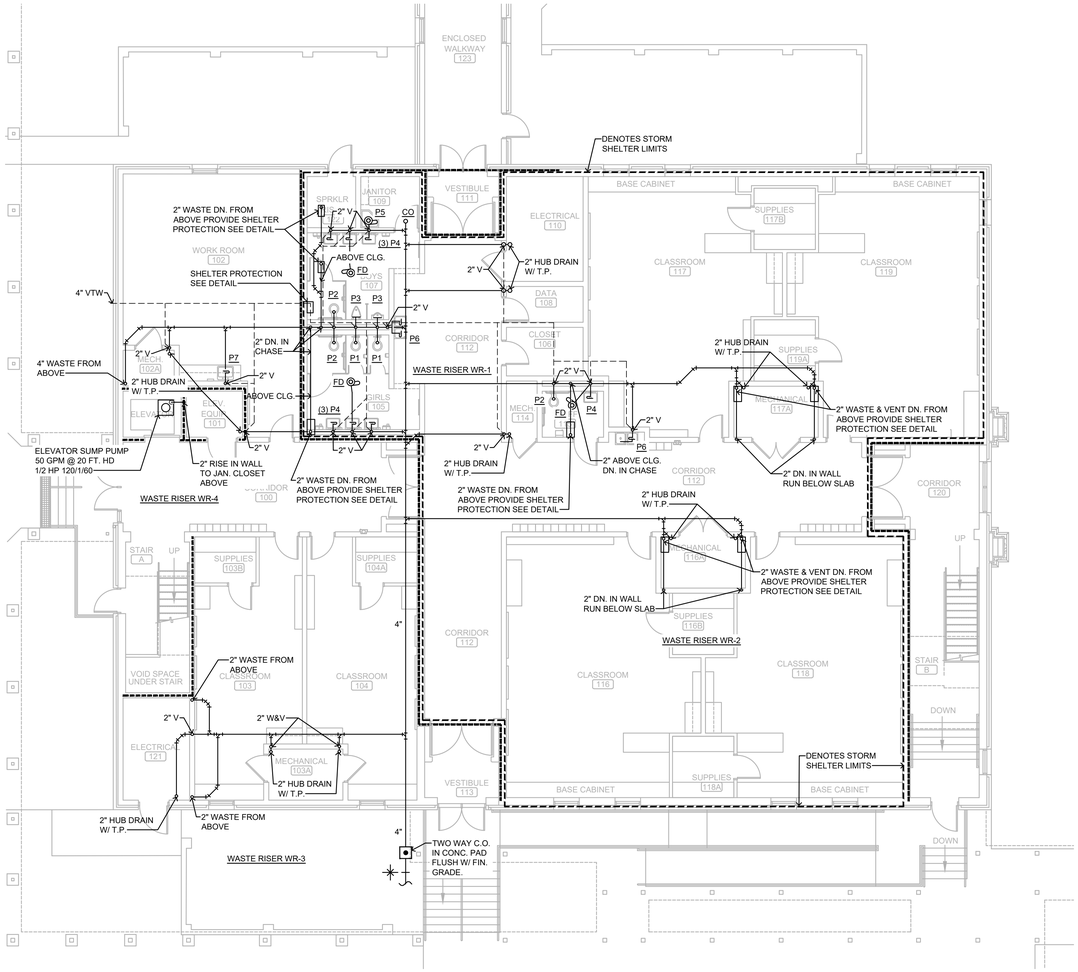

N
W E
S

SHOWING WASTE PIPING

FIRST FLOOR PLBG. PLAN

SCALE: 1/8" = 1'-0"

0' 2' 4' 8' 16' 32'

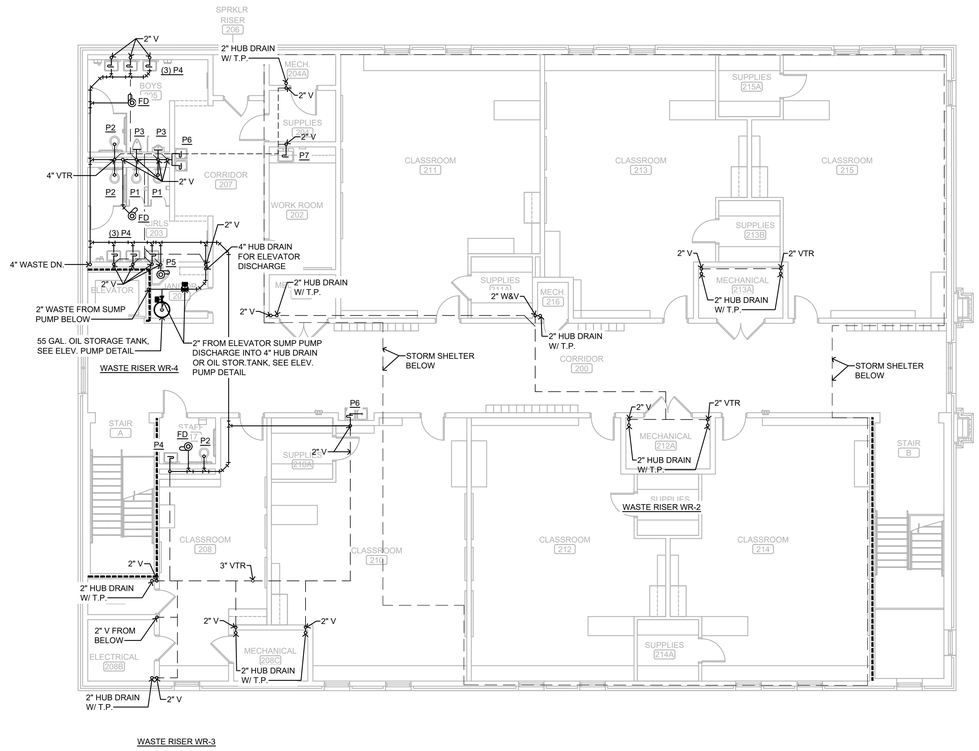

N
W E
S

SHOWING WASTE PIPING

SECOND FLOOR PLBG. PLAN

SCALE: 1/8" = 1'-0"

0' 2' 4' 8' 16' 32'

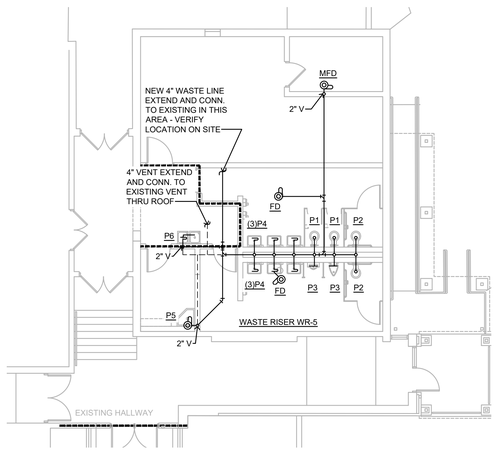

N
W E
S

SHOWING WASTE PIPING

TOILET BUILDING PLBG. PLAN

SCALE: 1/8" = 1'-0"

0' 2' 4' 8' 16' 32'

CLASSROOM ADDITION

FOR

UNION HILL SCHOOL

SOMERVILLE, ALABAMA

FOR THE

MORGAN COUNTY BOARD OF EDUCATION

McKEE and ASSOCIATES
ARCHITECTS, INC.
631 SOUTH HULL STREET , MONTGOMERY , ALABAMA 36104 (334) 834-9933

ALABAMA REGISTERED No. 23369 PROFESSIONAL ENGINEER J. S. EIRING 10.13.22

SHEET TITLE :	PLBG. PLANS - SHOWING WASTE PIPING
MCKEE JOB # :	22-134
DRAWN BY :	C. WARD
CHECKED BY :	T. ZGOUVAS
DATE:	10.13.2022
REVISED DATE:	
REVISED DATE:	
REVISED DATE:	

ZEA
ZGOUVAS, EIRING & ASSOCIATES
CONSULTING ENGINEERS
800 S McDONOUGH STREET
MONTGOMERY, AL. 36104
334.263.4406
ZEA PROJECT NUMBER 22-170

THE INFORMATION CONTAINED IN THIS DRAWING IS COPYRIGHTED MATERIAL AND SHALL NOT BE REPRODUCED, DIGITIZED, OR REVISED, IN WHOLE OR IN PART, WITHOUT THE WRITTEN CONSENT OF ZGOUVAS, EIRING AND ASSOCIATES

SHEET NO. : P4

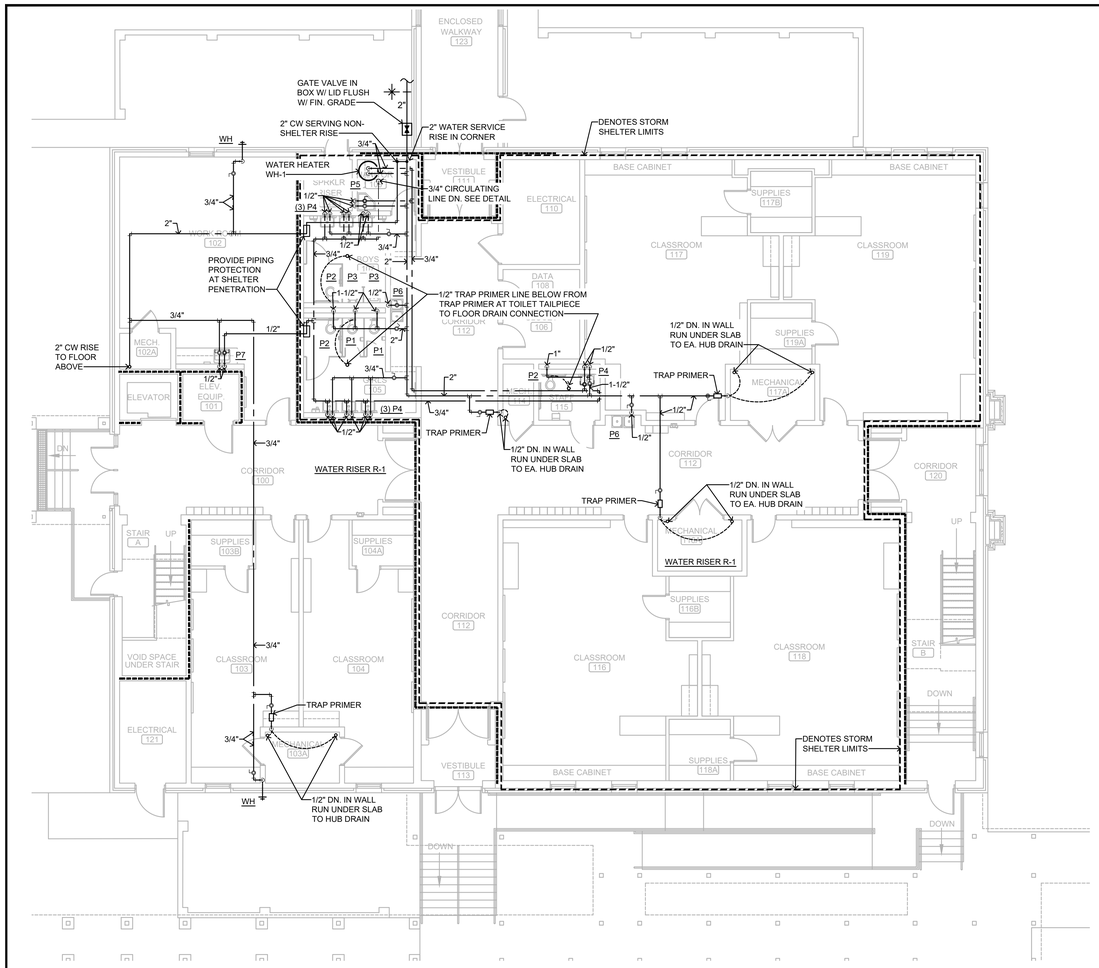

N

SHOWING WASTE PIPING

FIRST FLOOR PLBG. PLAN

SCALE: 1/8" = 1'-0"

0' 2' 4' 8' 16' 32'

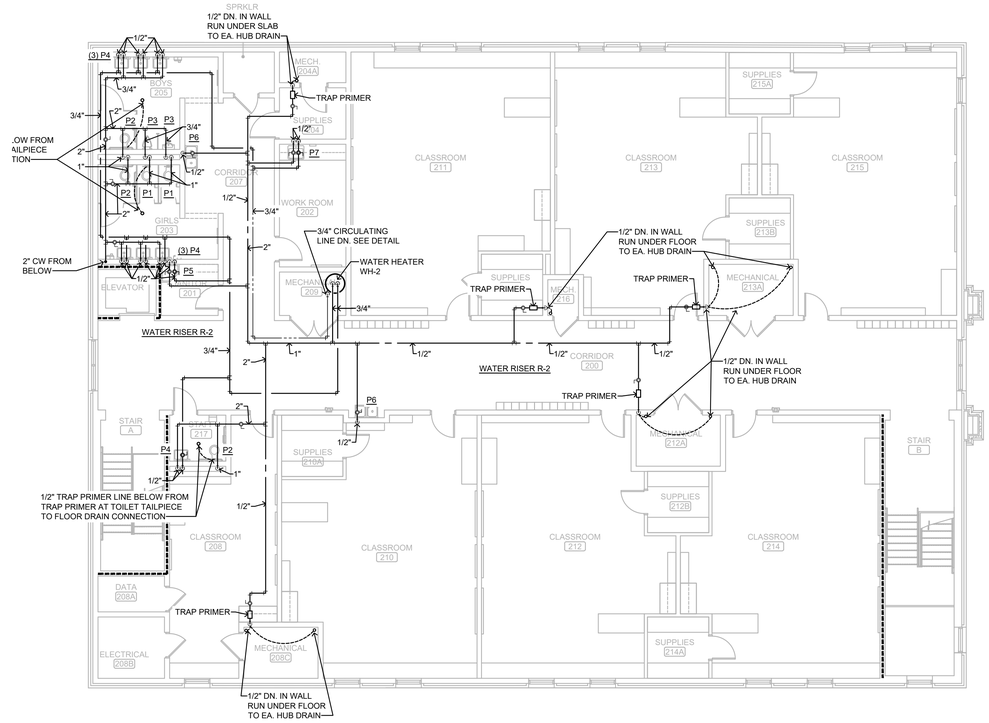

N

SHOWING WASTE PIPING

SECOND FLOOR PLBG. PLAN

SCALE: 1/8" = 1'-0"

0' 2' 4' 8' 16' 32'

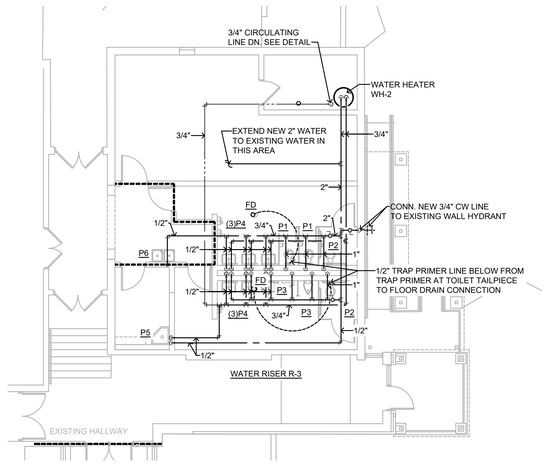

N

SHOWING WATER PIPING

TOILET BUILDING PLBG. PLAN

SCALE: 1/8" = 1'-0"

0' 2' 4' 8' 16' 32'

CLASSROOM ADDITION

FOR

UNION HILL SCHOOL

SOMERVILLE, ALABAMA

FOR THE

MORGAN COUNTY BOARD OF EDUCATION

McKEE and ASSOCIATES
ARCHITECTS, INC.
631 SOUTH HULL STREET, MONTGOMERY, ALABAMA 36104 (334) 834-9933

ALABAMA LICENSED PROFESSIONAL No. 23369 10.13.22 ENGINEER J. R. EIRING

SHEET TITLE :	PLBG. PLANS - SHOWING WATER PIPING & RISER
MCKEE JOB # :	22-134
DRAWN BY :	C. WARD
CHECKED BY :	T. ZGOUVAS
DATE:	10.13.2022
REVISED DATE:	
REVISED DATE:	
REVISED DATE:	

ZEA
ZGOUVAS, EIRING & ASSOCIATES
CONSULTING ENGINEERS
800 S McDONOUGH STREET
MONTGOMERY, AL. 36104
334.263.4406
ZEA PROJECT NUMBER 22-170

SHEET NO. : P5

THE INFORMATION CONTAINED IN THIS DRAWING IS COPYRIGHTED MATERIAL AND SHALL NOT BE REPRODUCED, DIGITIZED, OR REVISED, IN WHOLE OR IN PART, WITHOUT THE WRITTEN CONSENT OF ZGOUVAS, EIRING AND ASSOCIATES

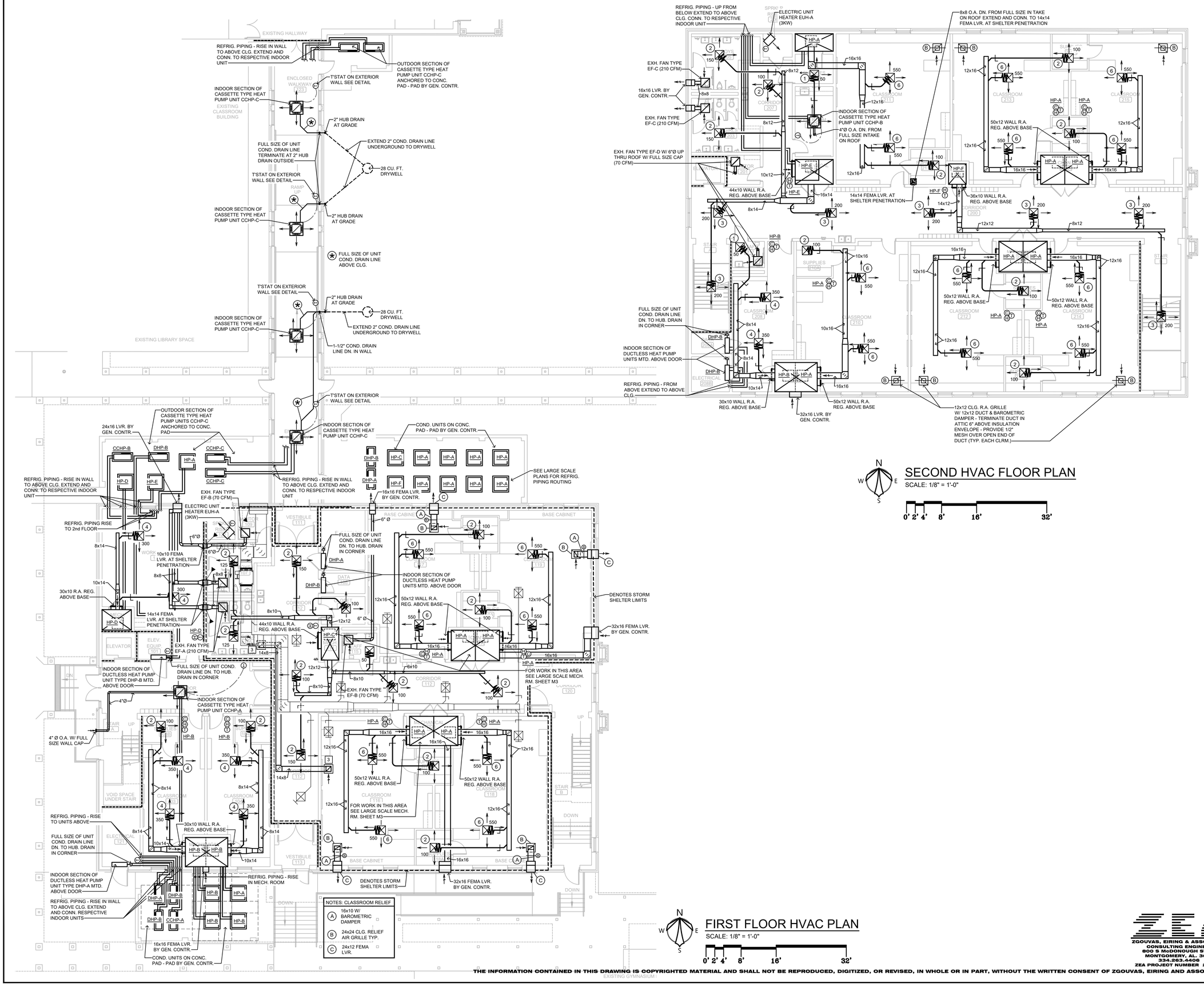

N W E S

SECOND HVAC FLOOR PLAN

SCALE: 1/8" = 1'-0"

0' 2' 4' 8' 16' 32'

N W E S

FIRST FLOOR HVAC PLAN

SCALE: 1/8" = 1'-0"

0' 2' 4' 8' 16' 32'

THE INFORMATION CONTAINED IN THIS DRAWING IS COPYRIGHTED MATERIAL AND SHALL NOT BE REPRODUCED, DIGITIZED, OR REVISED, IN WHOLE OR IN PART, WITHOUT THE WRITTEN CONSENT OF ZGOUVAS, EIRING AND ASSOCIATES

CLASSROOM ADDITION

FOR

UNION HILL SCHOOL

SOMERVILLE, ALABAMA

FOR THE

MORGAN COUNTY BOARD OF EDUCATION

McKEE and ASSOCIATES
ARCHITECTS, INC.
631 SOUTH HULL STREET . MONTGOMERY, ALABAMA 36104 (334) 834-9933

ALABAMA REGISTERED No. 23369 PROFESSIONAL 10.13.22 ENGINEER J.R. EIRING

SHEET TITLE : HVAC FLOOR PLANS

MCKEE JOB # : 22-134

DRAWN BY : C. WARD

CHECKED BY : T. ZGOUVAS

DATE: 10.13.2022

REVISED DATE:

REVISED DATE:

REVISED DATE:

ZGOUVAS, EIRING & ASSOCIATES
CONSULTING ENGINEERS
800 S McDONOUGH STREET
MONTGOMERY, AL. 36104
334.263.4406
ZEA PROJECT NUMBER 22-170

SHEET NO. : M1

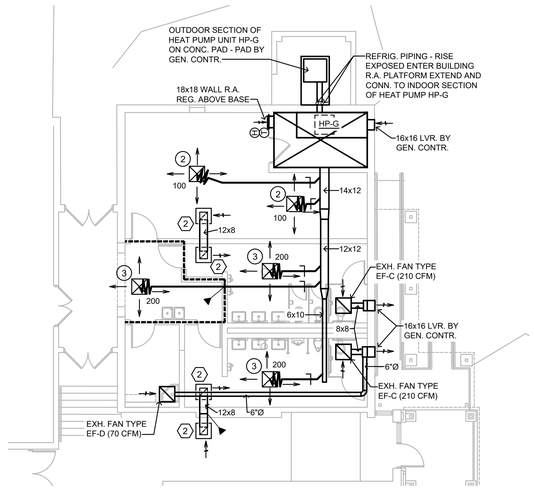

N
W E
S

TOILET BUILDING

SCALE: 1/8" = 1'-0"

0' 2' 4' 8' 16' 32'

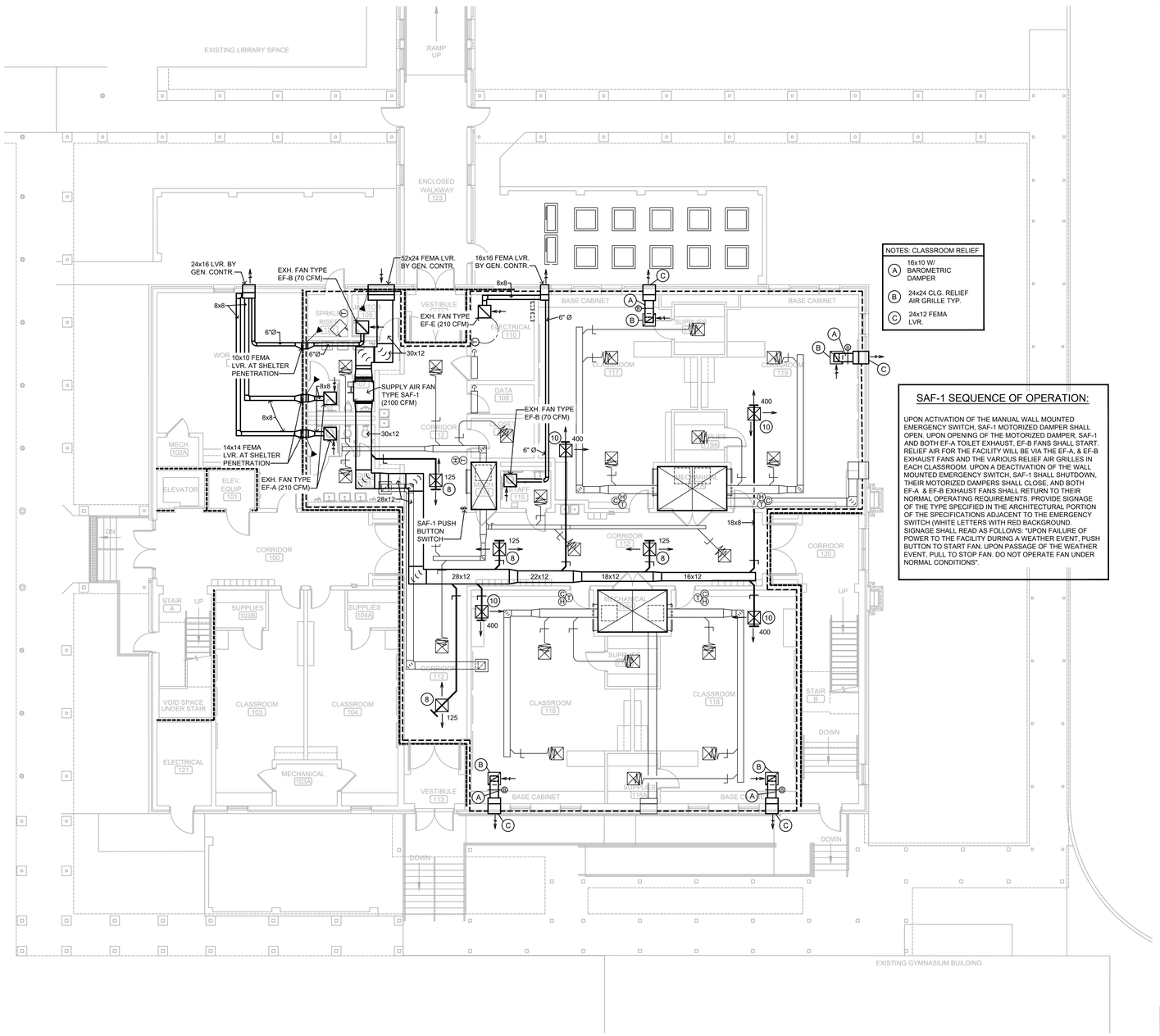

NOTES: CLASSROOM RELIEF

- (A) 16x10 W/ BAROMETRIC DAMPER
- (B) 24x24 CLG. RELIEF AIR GRILLE TYP.
- (C) 24x12 FEMA LVR.

SAF-1 SEQUENCE OF OPERATION:

UPON ACTIVATION OF THE MANUAL WALL MOUNTED EMERGENCY SWITCH, SAF-1 MOTORIZED DAMPER SHALL OPEN. UPON OPENING OF THE MOTORIZED DAMPER, SAF-1 AND BOTH EF-A TOILET EXHAUST, EF-B FANS SHALL START. RELIEF AIR FOR THE FACILITY WILL BE VIA THE EF-A, & EF-B EXHAUST FANS AND THE VARIOUS RELIEF AIR GRILLES IN EACH CLASSROOM. UPON A DEACTIVATION OF THE WALL MOUNTED EMERGENCY SWITCH, SAF-1 SHALL SHUTDOWN, THEIR MOTORIZED DAMPERS SHALL CLOSE, AND BOTH EF-A & EF-B EXHAUST FANS SHALL RETURN TO THEIR NORMAL OPERATING REQUIREMENTS. PROVIDE SIGNAGE OF THE TYPE SPECIFIED IN THE ARCHITECTURAL PORTION OF THE SPECIFICATIONS ADJACENT TO THE EMERGENCY SWITCH (WHITE LETTERS WITH RED BACKGROUND. SIGNAGE SHALL READ AS FOLLOWS: "UPON FAILURE OF POWER TO THE FACILITY DURING A WEATHER EVENT, PUSH BUTTON TO START FAN. UPON PASSAGE OF THE WEATHER EVENT, PULL TO STOP FAN. DO NOT OPERATE FAN UNDER NORMAL CONDITIONS".

N
W E
S

STORM SHELTER VENTILATION PLAN

SCALE: 1/8" = 1'-0"

0' 2' 4' 8' 16' 32'

CLASSROOM ADDITION

FOR

UNION HILL SCHOOL

SOMERVILLE, ALABAMA

FOR THE

MORGAN COUNTY BOARD OF EDUCATION

McKEE and ASSOCIATES
ARCHITECTS, INC.
631 SOUTH HULL STREET , MONTGOMERY , ALABAMA 36104 (334) 834-9933

ALABAMA No. 23369 PROFESSIONAL 10.13.22 ENGINEER J. R. EIRING

SHEET TITLE :	STORM SHELTER VENTILATION PLAN & TOILET BUILDING PLAN
MCKEE JOB # :	22-134
DRAWN BY :	C. WARD
CHECKED BY :	T. ZGOUVAS
DATE:	10.13.2022
REVISED DATE:	
REVISED DATE:	
REVISED DATE:	

ZEA
ZGOUVAS, EIRING & ASSOCIATES
CONSULTING ENGINEERS
800 S McDONOUGH STREET
MONTGOMERY, AL. 36104
334.263.4406
ZEA PROJECT NUMBER 22-170

SHEET NO. : M2

THE INFORMATION CONTAINED IN THIS DRAWING IS COPYRIGHTED MATERIAL AND SHALL NOT BE REPRODUCED, DIGITIZED, OR REVISED, IN WHOLE OR IN PART, WITHOUT THE WRITTEN CONSENT OF ZGOUVAS, EIRING AND ASSOCIATES

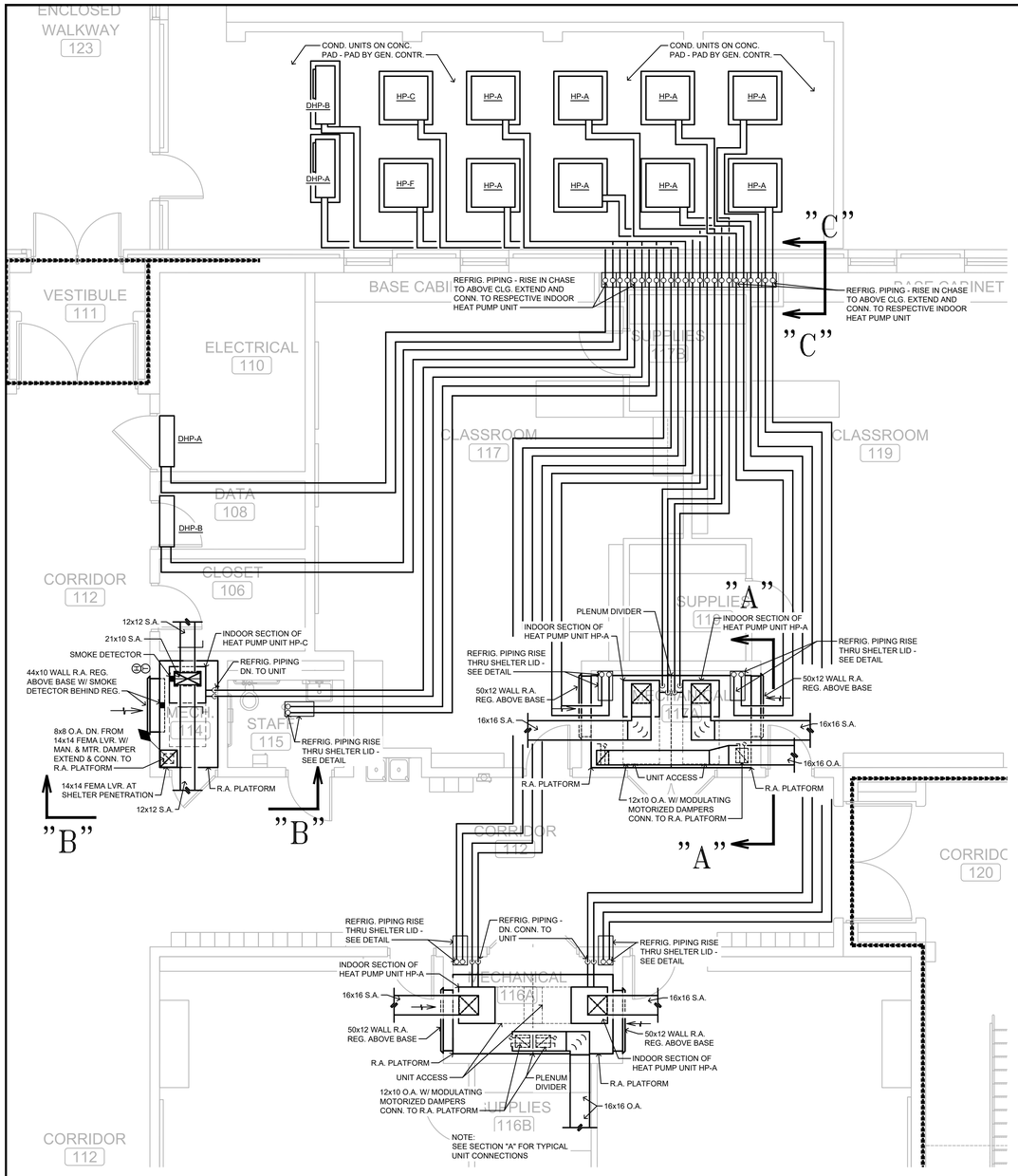

PARTIAL HVAC FLOOR PLAN

SCALE: 1/4" = 1'-0"

0' 1' 2' 4' 8' 16'

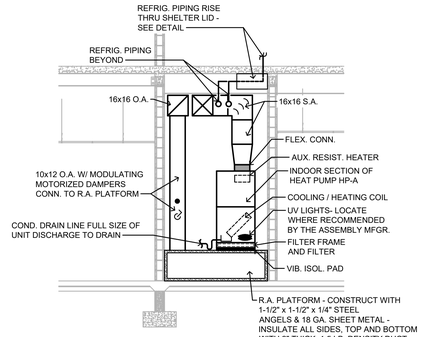

SECTION "A"

SCALE: 1/4" = 1'-0"

0' 1' 2' 4' 8' 16'

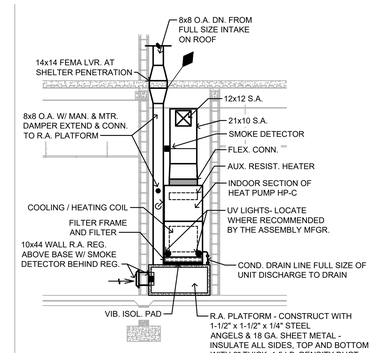

SECTION "B"

SCALE: 1/4" = 1'-0"

0' 1' 2' 4' 8' 16'

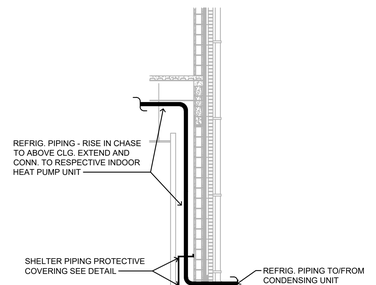

SECTION "C"

SCALE: 1/4" = 1'-0"

0' 1' 2' 4' 8' 16'

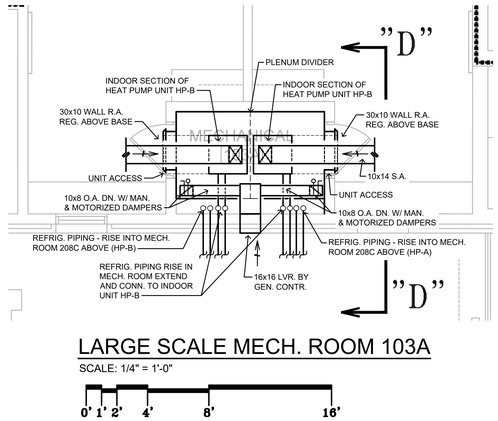

LARGE SCALE MECH. ROOM 103A

SCALE: 1/4" = 1'-0"

0' 1' 2' 4' 8' 16'

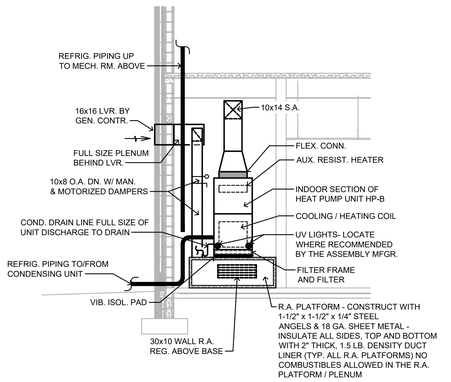

SECTION "D"

SCALE: 1/4" = 1'-0"

0' 1' 2' 4' 8' 16'

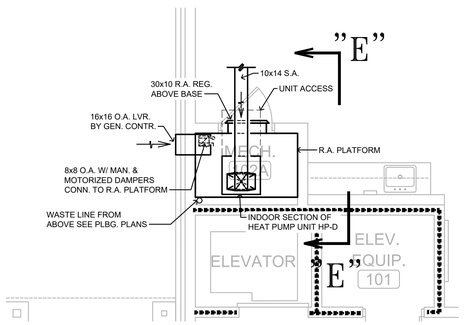

LARGE SCALE MECH. ROOM 102A

SCALE: 1/4" = 1'-0"

0' 1' 2' 4' 8' 16'

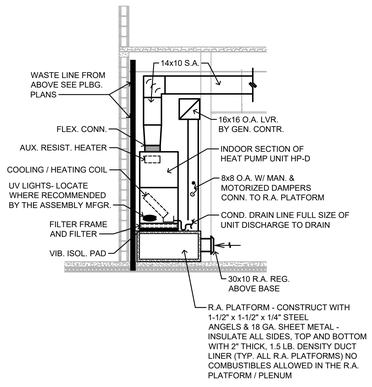

SECTION "E"

SCALE: 1/4" = 1'-0"

0' 1' 2' 4' 8' 16'

CLASSROOM ADDITION

FOR

UNION HILL SCHOOL

SOMERVILLE, ALABAMA

FOR THE

MORGAN COUNTY BOARD OF EDUCATION

McKEE and ASSOCIATES
ARCHITECTS, INC.
631 SOUTH HULL STREET, MONTGOMERY, ALABAMA 36104 (334) 834-9933



SHEET TITLE :	LARGE SCALE MECH. ROOMS AND SECTIONS
MCKEE JOB # :	22-134
DRAWN BY :	C. WARD
CHECKED BY :	T. ZGOUVAS
DATE:	10.13.2022
REVISED DATE:	
REVISED DATE:	
REVISED DATE:	

ZEA
ZGOUVAS, EIRING & ASSOCIATES
CONSULTING ENGINEERS
900 S McDONOUGH STREET
MONTGOMERY, AL. 36104
334.263.4406
ZEA PROJECT NUMBER 22-170

SHEET NO. : M3

THE INFORMATION CONTAINED IN THIS DRAWING IS COPYRIGHTED MATERIAL AND SHALL NOT BE REPRODUCED, DIGITIZED, OR REVISED, IN WHOLE OR IN PART, WITHOUT THE WRITTEN CONSENT OF ZGOUVAS, EIRING AND ASSOCIATES

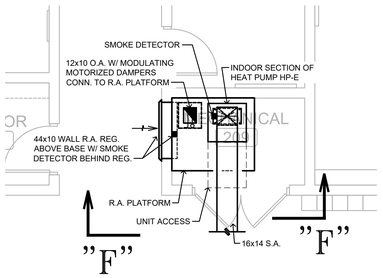

LARGE SCALE MECH. ROOM 209

SCALE: 1/4" = 1'-0"

0' 1' 2' 4' 8' 16'

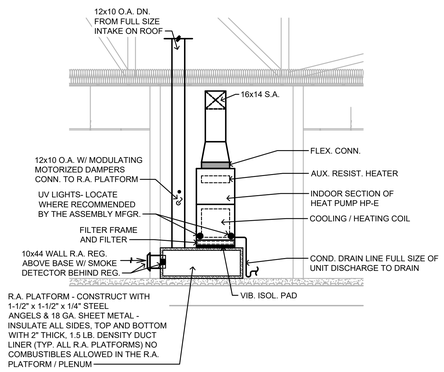

SECTION "F"

SCALE: 1/4" = 1'-0"

0' 1' 2' 4' 8' 16'

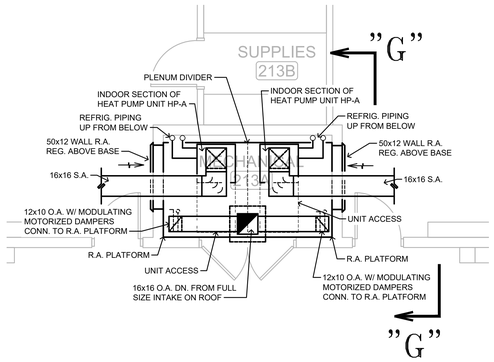

LARGE SCALE MECH. ROOM 213A

SCALE: 1/4" = 1'-0"

0' 1' 2' 4' 8' 16'

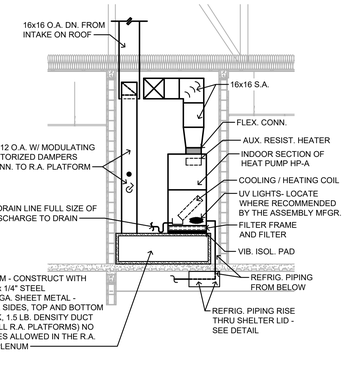

SECTION "G"

SCALE: 1/4" = 1'-0"

0' 1' 2' 4' 8' 16'

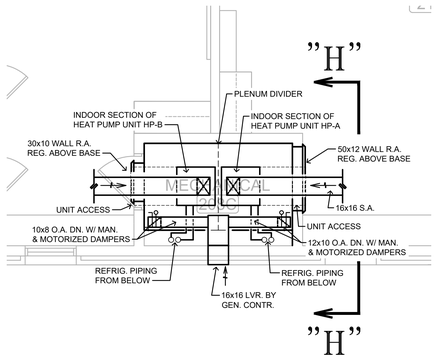

LARGE SCALE MECH. ROOM 208C

SCALE: 1/4" = 1'-0"

0' 1' 2' 4' 8' 16'

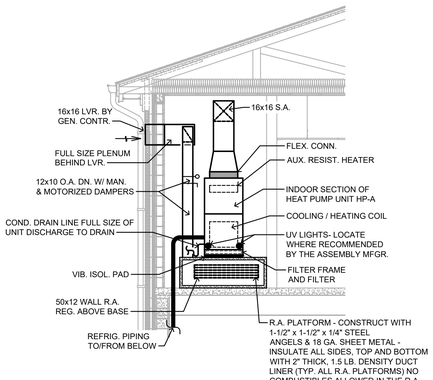

SECTION "H"

SCALE: 1/4" = 1'-0"

0' 1' 2' 4' 8' 16'

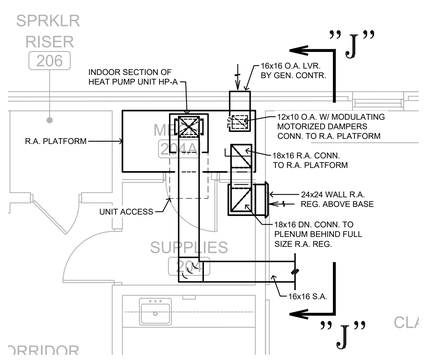

LARGE SCALE MECH. ROOM 204A

SCALE: 1/4" = 1'-0"

0' 1' 2' 4' 8' 16'

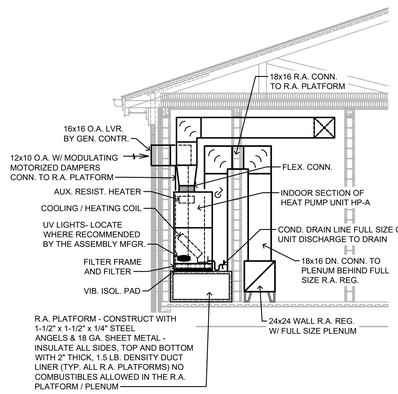

SECTION "J"

SCALE: 1/4" = 1'-0"

0' 1' 2' 4' 8' 16'

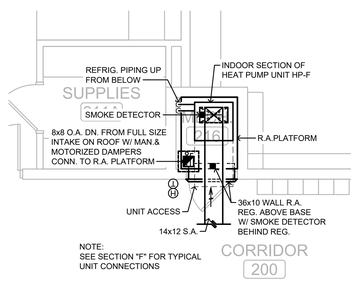

LARGE SCALE MECH. ROOM 216

SCALE: 1/4" = 1'-0"

0' 1' 2' 4' 8' 16'

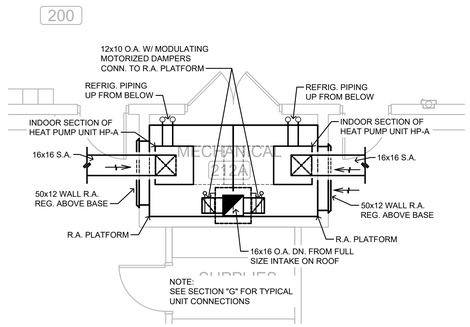

LARGE SCALE MECH. ROOM 212A

SCALE: 1/4" = 1'-0"

0' 1' 2' 4' 8' 16'

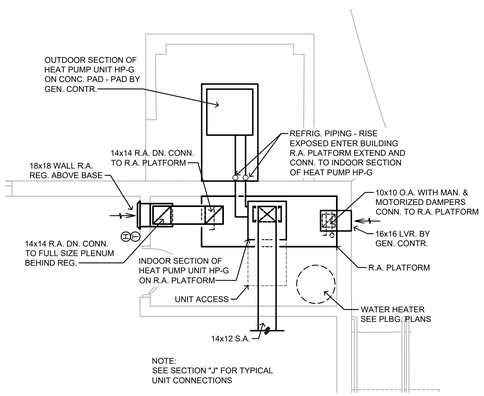

LARGE SCALE MECH. ROOM AT TOILET BUILDING

SCALE: 1/4" = 1'-0"

0' 1' 2' 4' 8' 16'

THE INFORMATION CONTAINED IN THIS DRAWING IS COPYRIGHTED MATERIAL AND SHALL NOT BE REPRODUCED, DIGITIZED, OR REVISED, IN WHOLE OR IN PART, WITHOUT THE WRITTEN CONSENT OF ZGOUVAS, EIRING AND ASSOCIATES

CLASSROOM ADDITION
FOR
UNION HILL SCHOOL
SOMERVILLE, ALABAMA
FOR THE
MORGAN COUNTY BOARD OF EDUCATION

McKEE and ASSOCIATES
ARCHITECTS, INC.
631 SOUTH HULL STREET , MONTGOMERY , ALABAMA 36104 (334) 834-9933

ALABAMA
No. 23369
PROFESSIONAL
10.13.22
ENGINEER
J. R. EIRING

SHEET TITLE : LARGE SCALE MECH. ROOMS AND SECTIONS

MCKEE JOB # : 22-134

DRAWN BY : C. WARD

CHECKED BY : T. ZGOUVAS

DATE: 10.13.2022

REVISED DATE:

REVISED DATE:

REVISED DATE:

ZEA
ZGOUVAS, EIRING & ASSOCIATES
CONSULTING ENGINEERS
800 S McDONOUGH STREET
MONTGOMERY, AL. 36104
334.263.4406
ZEA PROJECT NUMBER 22-170

SHEET NO. : M4

SPLIT SYSTEM HEAT PUMP UNITS SCHEDULE

UNIT TYPE	MINIMUM TOTAL AIR CFM	OUTSIDE AIR CFM			APPROX. EXT. STATIC PRESS.- INCHES OF WATER COL.	FAN MOTOR				MINIMUM COOLING CAPACITY AT A.H.R.I. CONDITIONS - TOTAL BTU/HR	LOW AMBIENT HEAD PRESSURE CONTROL "F - (COOLING ONLY)	MINIMUM HEATING CAP. (COMPRESSOR ONLY) AT 22°F AMBIENT & 70°F INDOOR TEMP. - BTU/HR	COMPRESSOR MOTOR				OUTDOOR UNIT FAN(S)				AUXILIARY RESISTANCE HEATER					MINIMUM HSPF AT A.H.R.I. CONDITIONS	MIN. SEER AT A.H.R.I. CONDITIONS
		MINIMUM SETPOINT	MAXIMUM CO2 SETPOINT	MAXIMUM SETPOINT (ECONOMIZER)		APPROX. H.P.	VOLTS	PHASE	HZ.				APPROX. F.L.A.	VOLTS	PH.	HZ.	APPROX. F.L.A.	VOLTS	PH.	HZ.	K.W.	CONTROL STEPS	VOLTS	PH.	HZ.		
HP-A	1200	100	400	N/A	.75	1/2	208	3	60	36,000	45	23,000	11.0	208	3	60	1.5	208	1	60	10.0	TWO	208	3	60	8.2	14.0
HP-B	800	50	200	N/A	.65	1/2	208	1	60	24,000	45	16,000	10.0	208	1	60	1.5	208	1	60	6.0	ONE	208	1	60	8.2	14.0
HP-C	1000	210	210	N/A	.62	1/2	208	1	60	30,000	45	20,000	15.0	208	1	60	1.5	208	1	60	8.0	TWO	208	1	60	8.2	14.0
HP-D	600	111	111	N/A	.61	1/2	208	1	60	18,000	45	12,000	8.0	208	1	60	1.5	208	1	60	5.0	ONE	208	1	60	8.2	14.0
HP-E	1000	250	250	N/A	.83	3/4	208	1	60	30,000	45	20,000	15.0	208	1	60	1.5	208	1	60	8.0	TWO	208	1	60	8.2	14.0
HP-F	800	200	200	N/A	.81	1/2	208	1	60	24,000	45	16,000	10.0	208	1	60	1.5	208	1	60	6.0	ONE	208	1	60	8.2	14.0
HP-G	800	200	200	N/A	.81	1/2	208	1	60	24,000	45	16,000	10.0	208	1	60	1.5	208	1	60	6.0	ONE	208	1	60	8.2	14.0

NOTES:
1. ALL INDOOR UNITS SHALL BE FACTORY WIRED FOR SINGLE POINT POWER CONNECTIONS (FAN AND HEATER).
2. 208 VOLT, 3 PHASE POWER IS BEING PROVIDED BY ELECTRICAL TO THE INDOOR HEAT PUMP UNIT SECTIONS. UNIT MANUFACTURER SHALL PROVIDE FACTORY INSTALLED RELAYS, TRANSFORMERS, ETC., AS REQUIRED TO OPERATE EQUIPMENT AT POWER REQUIREMENTS SPECIFIED ABOVE.
3. SEER RATINGS BASED ON AHRI 210/240
4. HSPF RATING BASED ON AHRI 210/240

FANS SCHEDULE

FAN TYPE	FAN CFM	DESCRIPTION	MINIMUM FAN SIZE INCHES	APPROX. FAN WALL/ ROOF OPENING -INCHES	MAXIMUM FAN SPEED RPM	APPROX. EXT. STATIC PRESS. IN. WTR. COL.	FAN MOTOR				CONTROL INTERLOCK	REMARKS
							MIN. H.P./ WATTS	POWER				
								VOLTS	PH.	HERTZ		
EF-A	210	CEILING MOUNTED, CENTRIFUGAL, DIRECT DRIVEN	10.0	N/A	1050	.50	245 w	120	1	60	LIGHTING CIRCUIT / INVERTER	
EF-B	70	CEILING MOUNTED, CENTRIFUGAL, DIRECT DRIVEN	8.0	N/A	1050	.41	77 w	120	1	60	LIGHTING CIRCUIT / INVERTER	
EF-C	210	CEILING MOUNTED, CENTRIFUGAL, DIRECT DRIVEN	8.0	N/A	1050	.30	84 w	120	1	60	LIGHTING CIRCUIT	
EF-D	70	CEILING MOUNTED, CENTRIFUGAL, DIRECT DRIVEN	8.0	N/A	1050	.30	77 w	120	1	60	LIGHTING CIRCUIT	
EF-E	210	IN-LINE, DIRECT DRIVEN	8.0	N/A	1050	.40	84 w	120	1	60	T'STAT / INVERTER	ZEPHER SERIES TDA
SAF-1	2100	IN-LINE SQUARE, DIRECT DRIVEN, ECM	1.20	N/A	1558	1.21	1.0 h.p.	208	1	60	INVERTER	

ELECTRIC UNIT HEATER SCHEDULE

HEATER TYPE	DESCRIPTION	AIR QUANTITY- CFM	MINIMUM CAPACITY- KW	FAN HP	FAN MAX. RPM	POWER			NUMBER OF CONTROL STEPS	REMARKS
						VOLTS	PHASE	HERTZ		
EUH-A	WALL MOUNTED, HORIZONTAL DISCHARGE, PROPELLER	300	3.0	1/25	1550	208	1	60	ONE	

CEILING DIFFUSER SCHEDULE

SYMBOL	CFM RANGE	NECK SIZE INCHES	FACE SIZE INCHES	BRANCH DUCT SIZE	MAXIMUM NC VALUE	BASIS OF DESIGN
1	10 - 95	6" ROUND	24x24	6"Ø	20	TITUS TMS
2	100 - 180	8" ROUND	24x24	8"Ø	20	TITUS TMS
3	185 - 270	10" ROUND	24x24	10"Ø	20	TITUS TMS
4	275 - 400	12" ROUND	24x24	12"Ø	20	TITUS TMS
5	405 - 530	14" ROUND	24x24	14"Ø	20	TITUS TMS
6	535 - 625	15" ROUND	24x24	15"Ø	20	TITUS TMS
7	10 - 95	6x6	6x6	6x6	20	TITUS TDC
8	95 - 200	9x9	9x9	10x7	20	TITUS TDC
9	205 - 350	12x12	12x12	13x9	20	TITUS TDC
10	355 - 500	15x15	15x15	15x10	20	TITUS TDC

NOTES
1.) RUNOUTS/BRANCH DUCTS SHALL BE AS SCHEDULED ABOVE UNLESS NOTED OTHERWISE ON THE PLANS
2.) CONTRACTOR SHALL INSULATE THE EXTERIOR (BACK SIDE OF DIFFUSER PANEL) WITH 1" THICKNESS EXTERNAL DUCT INSULATION WITH CHARACTERISTICS SPECIFIED FOR EXTERNAL DUCT INSULATION.

EXHAUST/RETURN AIR REGISTER SCHEDULE

SYMBOL		CFM RANGE	SIZE - IN. x IN.	DESCRIPTION	MAXIMUM NC RATING	BRANCH DUCT SIZE
EXH.	R.A.					
1	1	0 - 140	9x9	CEILING EXH. OR RETURN REG.	20	9x6
2	2	141 - 240	12x12	CEILING EXH. OR RETURN REG.	20	12x7
3	3	241 - 340	14x14	CEILING EXH. OR RETURN REG.	20	14x7
4	4	341 - 460	16x16	CEILING EXH. OR RETURN REG.	20	16x9
5	5	461 - 600	18x18	CEILING EXH. OR RETURN REG.	20	18x10
6	6	601 - 760	20x20	CEILING EXH. OR RETURN REG.	20	20x12
7	7	761 - 940	24x24	CEILING EXH. OR RETURN REG.	20	24x12
8	8	941 - 1200	30x24	CEILING EXH. OR RETURN REG.	20	24x14
9	9	1201 - 1400	36x24	CEILING EXH. OR RETURN REG.	20	28x14

NOTES
1.) RUNOUTS/BRANCH DUCTS SHALL BE AS SCHEDULED ABOVE UNLESS NOTED OTHERWISE ON THE PLANS.
2.) 8 8 & 9 9 SHALL BE IN INTEGRAL 48x24 METAL CEILING PANEL AS SPECIFIED. ALL OTHERS SHALL BE IN INTEGRAL 24x24 METAL CEILING PANEL AS SPECIFIED.

WALL MOUNTED DUCTLESS HEAT PUMP UNIT SCHEDULE

UNIT TYPE	DHP-A	DHP-B
MINIMUM TOTAL COOLING CAP. AT A.R.I. CONDITIONS - BTU/HR	12,000	9,000
MINIMUM HEATING CAP. (COMPRESSOR ONLY) AT 70°F INDOOR & 17°F AMBIENT - BTU/HR	7,600	6,700
INDOOR FAN CFM AT HIGH SPEED	230	230
INDOOR UNIT MCA - POWER	1.5A - 208V., 1 PH. , 60 HZ.	1.5A - 208V., 1 PH. , 60 HZ.
OUTDOOR UNIT MCA (COMPRESSOR AND COND. FAN) - POWER	9.0A - 208V., 1 PH., 60 HZ.	9.0A - 208V., 1 PH., 60 HZ.
OUTDOOR UNIT MOP (COMPRESSOR AND COND. FAN) - POWER	15.0A - 208V., - 1PH., 60HZ.	15.0A - 208V., - 1PH., 60HZ.
MINIMUM HSPF AT AHRI 210/240 CONDS.	10.0	10.0
MINIMUM S.E.E.R. AT AHRI 210/240 CONDS	18.0	18.0
BASIS OF DESIGN	MITSUBISHI PKA / PUZ	MITSUBISHI MSZ / MUZ

CEILING CASSETTE TYPE HEAT PUMP UNIT SCHEDULE

UNIT TYPE	CCHP-A	CCHP-B	CCHP-C
MINIMUM TOTAL COOLING CAP. AT A.R.I. CONDITIONS - BTU/HR	15,000	9,000	15,000
MINIMUM HEATING CAP. (COMPRESSOR ONLY) AT 70°F INDOOR & 17°F AMBIENT - BTU/HR	14,000	8,300	14,000
INDOOR FAN CFM AT HIGH SPEED	350	250	350
OUTSIDE AIR CFM	35	35	20
INDOOR UNIT MCA - POWER	1.0 - 208V, 1 PH. , 60 HZ.	1.0 - 208V, 1 PH. , 60 HZ.	1.0 - 208V, 1 PH. , 60 HZ.
OUTDOOR UNIT MCA (COMPRESSOR AND COND. FAN) - POWER	13.0A - 208V, 1 PH., 60 HZ.	13.0A - 208V, 1 PH., 60 HZ.	13.0A - 208V, 1 PH., 60 HZ.
OUTDOOR UNIT MOP	15.0A - 208V., - 1PH., 60HZ.	15.0A - 208V., - 1PH., 60HZ.	15.0A - 208V., - 1PH., 60HZ.
MINIMUM HSPF AT AHRI 210/240 CONDS.	9.6	9.6	9.6
MINIMUM S.E.E.R. AT AHRI 210/240 CONDS	16.0	15.0	16.0

PACKAGED THRU THE WALL HEAT PUMP UNIT SCHEDULE

UNIT TYPE	TWHP-A
MINIMUM TOTAL COOLING CAP. AT A.R.I. CONDITIONS - BTU/HR	13,800
MINIMUM HEATING CAPACITY (COMPRESSOR ONLY) BTU/HR	13,000
MINIMUM AUX. ELECTRIC RESISTANCE HEAT - KW	4.0
INDOOR FAN CFM AT HIGH SPEED	315
OUTSIDE AIR CFM	100
UNIT POWER - MCA / MOP	27.7 / 30.0 - 208V., 1PH., 60HZ.
MINIMUM E.E.R. AT A.R.I. 210/240	9.8
MINIMUM COP AT A.R.I. 210/240	3.0
REMARKS	W/ ARCHITECTURAL GRILLE

NOTES:
1. HEATING CAPACITY (COMPRESSOR) BASED ON 47°F DB AMBIENT TEMPERATURE

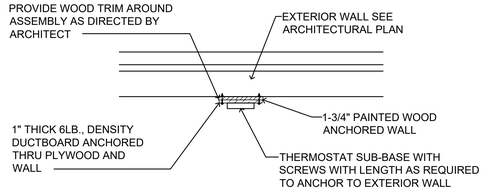

THERMOSTAT MOUNTING DETAIL ON EXTERIOR WALL

NOT TO SCALE

CLASSROOM ADDITION
FOR
UNION HILL SCHOOL
SOMERVILLE, ALABAMA
FOR THE
MORGAN COUNTY BOARD OF EDUCATION

McKEE and ASSOCIATES
ARCHITECTS, INC.
631 SOUTH HULL STREET , MONTGOMERY , ALABAMA 36104 (334) 834-9933

ALABAMA No. 22369 PROFESSIONAL 10.13.22 ENGINEER J. R. EIRING

SHEET TITLE : HVAC SCHEDULES

MCKEE JOB # : 22-134

DRAWN BY : C. WARD

CHECKED BY : T. ZGOUVAS

DATE: 10.13.2022

REVISED DATE:

REVISED DATE:

REVISED DATE:

ZEA
ZGOUVAS, EIRING & ASSOCIATES
CONSULTING ENGINEERS
800 S McDONOUGH STREET
MONTGOMERY, AL. 36104
334.263.4406
ZEA PROJECT NUMBER 22-170

SHEET NO. : M5

THE INFORMATION CONTAINED IN THIS DRAWING IS COPYRIGHTED MATERIAL AND SHALL NOT BE REPRODUCED, DIGITIZED, OR REVISED, IN WHOLE OR IN PART, WITHOUT THE WRITTEN CONSENT OF ZGOUVAS, EIRING AND ASSOCIATES

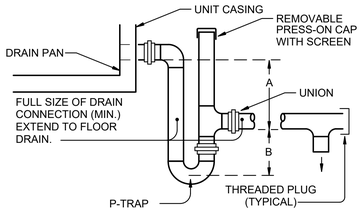

UNIT TYPE	A	B
DRAW-THRU	2" PLUS "X"	"X" PLUS 1"
BLOW-THRU	1" MINIMUM	2X PLUS 1"

WHERE "X" = AHU STATIC PRESSURE

TYPICAL AIR HANDLING UNIT CONDENSATE DRAIN DETAIL

NOT TO SCALE

NOTES:

1. CONTRACTOR SHALL PROVIDE DRAIN AS REQUIRED BY THE AIR HANDLING UNIT MANUFACTURER. IN ABSENCE OF THOSE REQUIREMENTS, CONTRACTOR SHALL PROVED DRAIN AS DETAILED ABOVE

2. CONTRACTOR SHALL RAISE AIR HANDLING UNIT AS REQUIRED TO ALLOW FOR INSTALLATION OF THE DRAIN AS DETAILED ABOVE

3. PROVIDE AN ELECTRIC SWITCH IN THE CONDENSATE DRAIN LINE, THAT CONFORMS TO UL 508, TO SHUT DOWN THE UNIT AND ALARM TO THE BUILDING ENERGY MANAGEMENT SYSTEM OPERATOR CONSOLE (IF APPLICABLE) SHOULD THE LINE BECOME OBSTRUCTED

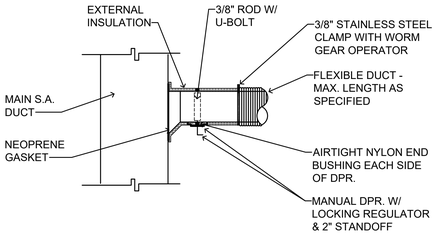

ROUND BRANCH DUCT TAKE-OFF DETAIL

NOT TO SCALE
RECTANGULAR RUNOUTS SAME EXCEPT WITH RECTANGULAR DUCT

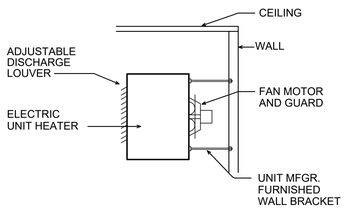

WALL MOUNTED ELECTRIC UNIT HEATER DETAIL

NOT TO SCALE

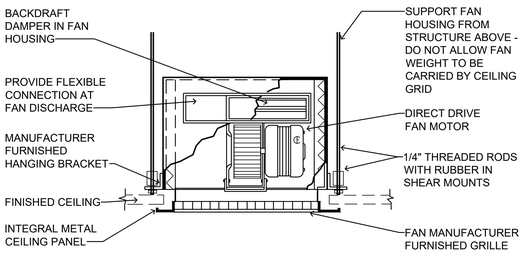

CEILING MOUNTED EXHAUST FAN CONN. DETAIL

NO SCALE

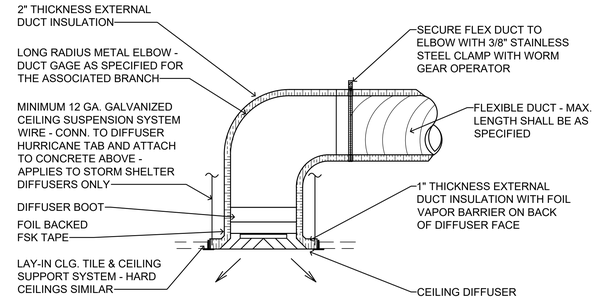

DIFFUSER BOOT/PLENUM CONNECTION DETAIL

NOT TO SCALE

1. DIFFUSERS PANELS SHALL BE INSULATED PRIOR TO INSTALLING INTO THE CEILING GRID
2. DO NOT COVER STAINLESS STEEL BAND AND WORM GEAR OPERATOR UNTIL ENGINEER HAS INSPECTED THE INSTALLATION.

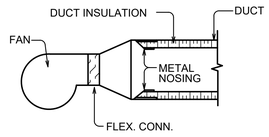

TYPICAL DUCT LINER INTERRUPTION DETAIL

NOT TO SCALE

NOTE !! THIS DETAIL APPLIES TO FIRE DAMPER INSTALLATION. WHERE DUCTS CONNECT TO FAN SECTION, ANYWHERE BARE DUCT LINER PROTRUDES INTO THE AIRSTREAM, ANY POINT WHERE LINED DUCT IS PRECEDED BY UNLINED DUCT, BARE DUCT INSULATION EDGES THAT ARE EXPOSED IN THE RETURN AIR PLENUM, ETC. - SEE SPECS FOR ADDITIONAL REQUIREMENTS

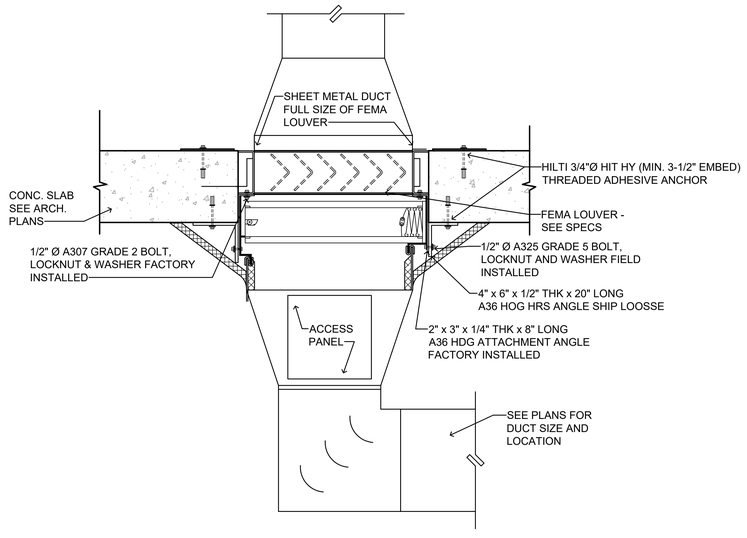

ROOF MOUNTED STORM SHELTER INTAKE / RELIEF AIR VENTILATOR

NOT TO SCALE

NOTE:
ALL ATTACHMENTS, ANCHORS, BOLTS, ETC. USED IN ATTACHING ITEMS TO THE SAFE ROOM LID SHALL BE COORDINATED WITH, SUBMITTED TO, AND APPROVED BY THE STRUCTURAL ENGINEER BEFORE INSTALLATION

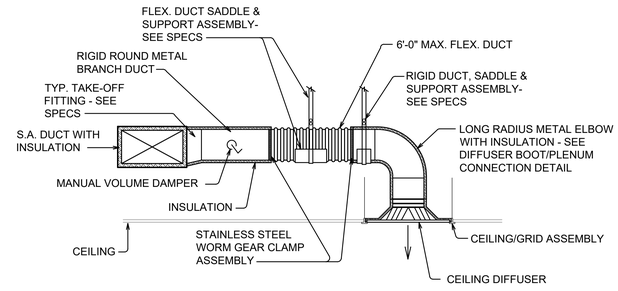

TYPICAL DIFFUSER RUN-OUT CONN.

NOT TO SCALE

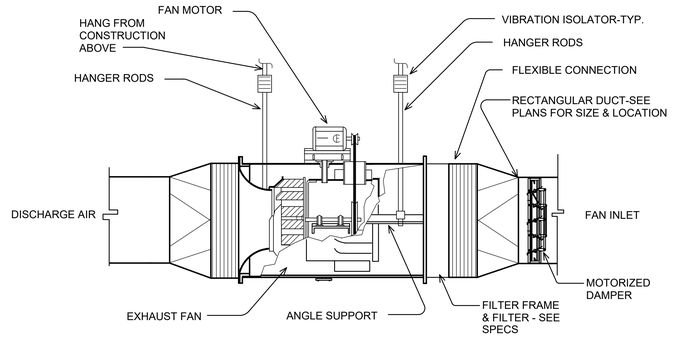

CABINET TYPE IN-LINE CENTRIFUGAL FAN DETAIL (SAF)

NOT TO SCALE

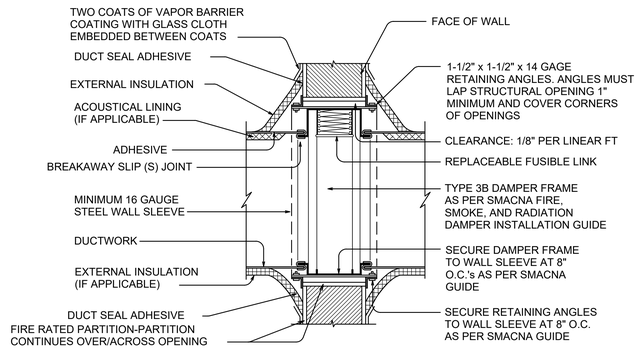

WALL MOUNTED FIRE DAMPER DETAIL

NOT TO SCALE

NOTES:
1.) PROVIDE FIRE DAMPERS IN ALL DUCTS PENETRATING FIRE RATED WALLS, CEILINGS, FLOORS AND ANY TYPE OF RATED ASSEMBLY - REFER TO ARCHITECTURAL DRAWINGS FOR LOCATIONS OF FIRE RATINGS.
2.) VERTICAL ACTION INSTALLATION SHOWN. HORIZONTAL ACTION DAMPER INSTALLATION SIMILAR
3.) PROVIDE ACCESS PANEL/DOOR IN DUCT AND INACCESSIBLE (HARD) CEILINGS FOR EACH FIRE DAMPER
4.) DO NOT EXTERNALLY INSULATE THE FIRE DAMPER ANGLES UNTIL THE ENGINEER HAS INSPECTED THE FIRE DAMPER INSTALLATION

SYMBOLS

DENOTES VERTICAL ACTION FIRE DAMPER

DENOTES HORIZONTAL ACTION FIRE DAMPER

CLASSROOM ADDITION
FOR
UNION HILL SCHOOL
SOMERVILLE, ALABAMA
FOR THE
MORGAN COUNTY BOARD OF EDUCATION

McKEE and ASSOCIATES
ARCHITECTS, INC.
631 SOUTH HULL STREET , MONTGOMERY , ALABAMA 36104 (334) 834-9933

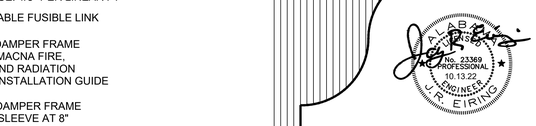

SHEET TITLE : HVAC DETAILS

MCKEE JOB # : 22-134

DRAWN BY : C. WARD

CHECKED BY : T. ZGOUVAS

DATE: 10.13.2022

REVISED DATE:

REVISED DATE:

REVISED DATE:

ZEA
ZGOUVAS, EIRING & ASSOCIATES
CONSULTING ENGINEERS
800 S McDONOUGH STREET
MONTGOMERY, AL. 36104
334.263.4406
ZEA PROJECT NUMBER 22-170

SHEET NO. : M6

THE INFORMATION CONTAINED IN THIS DRAWING IS COPYRIGHTED MATERIAL AND SHALL NOT BE REPRODUCED, DIGITIZED, OR REVISED, IN WHOLE OR IN PART, WITHOUT THE WRITTEN CONSENT OF ZGOUVAS, EIRING AND ASSOCIATES

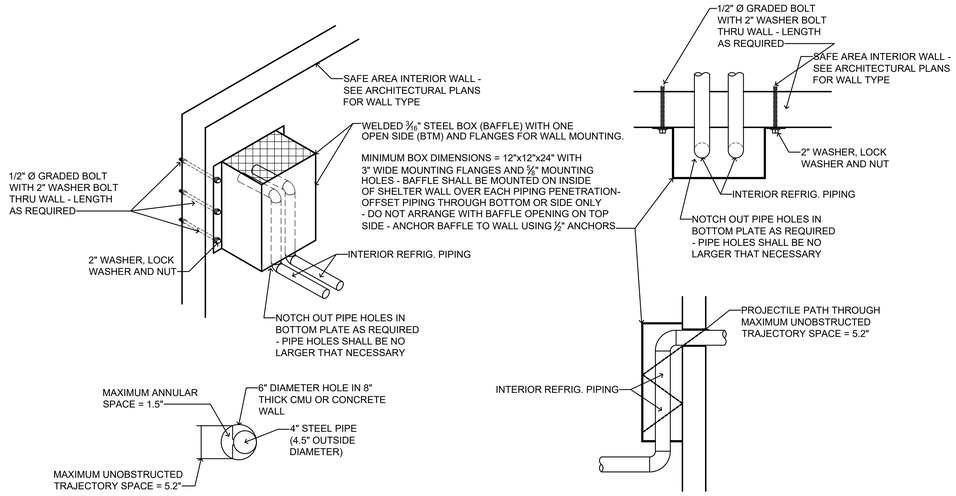

SAFE AREA REFRIG. PIPING WALL PENETRATION DETAIL

NOT TO SCALE

NOTES:
1. ALL ATTACHMENTS, ANCHORS, BOLTS, ETC., USED IN ATTACHING ITEMS TO THE SAFE ROOM WALL SHALL BE COORDINATED WITH, SUBMITTED TO, AND APPROVED BY THE STRUCTURAL ENGINEER BEFORE INSTALLATION
2. PENETRATIONS OF THE SAFE ROOM AREA WHICH ARE 2" Ø OR LESS DO NOT REQUIRE PROTECTION AS INDICATED ABOVE

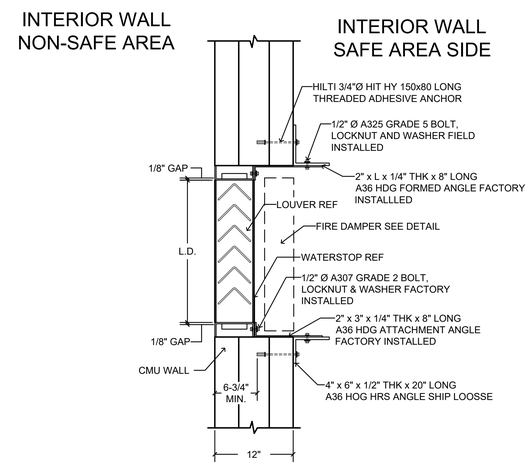

SECTIONAL VIEW

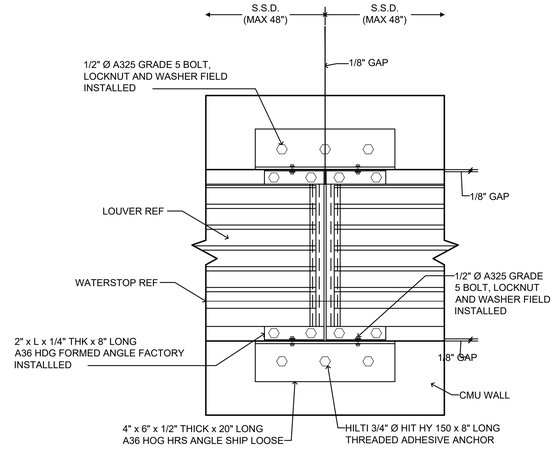

ELEVATION VIEW

FEMA LOUVER CONN. AT INTERIOR SAFE ROOM WALL PENETRATION DETAIL

NOT TO SCALE

NOTE:
ALL ATTACHMENTS, ANCHORS, BOLTS, ETC., USED IN ATTACHING ITEMS TO THE SAFE ROOM WALL SHALL BE COORDINATED WITH, SUBMITTED TO, AND APPROVED BY THE STRUCTURAL ENGINEER BEFORE INSTALLATION

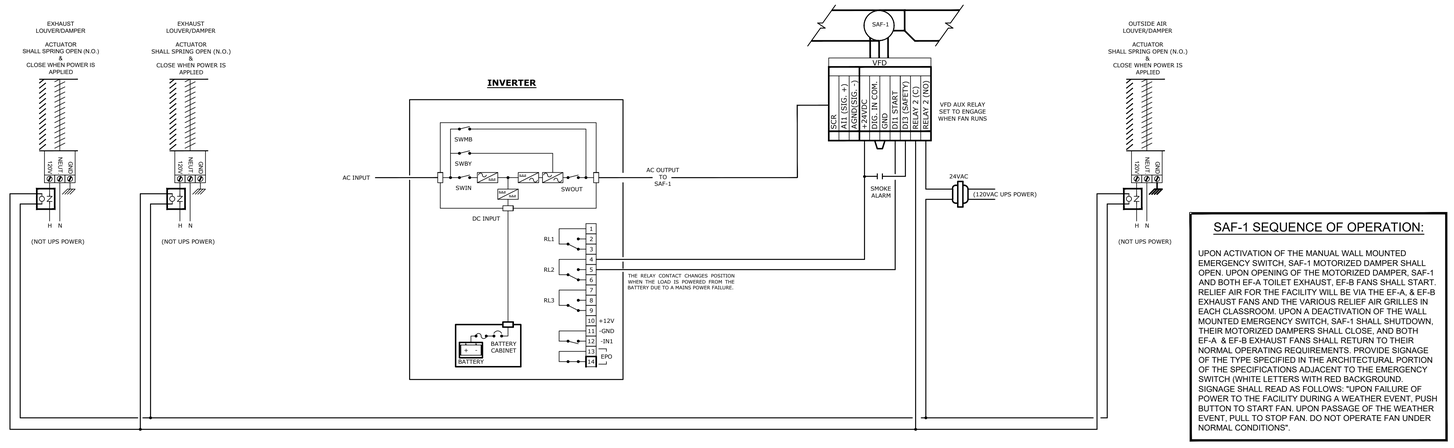

STORM SHELTER SAF CONTROL SCHEMATIC

NOT TO SCALE

SCHEMATIC IS DIAGRAMMATIC AND SHOWN FOR INTENT. CONTROLS SUB-CONTRACTOR TO COORDINATE ACTUAL WIRING REQUIREMENTS WITH ELECTRICAL CONTRACTOR AND PROVIDE AS REQUIRED- SEE ELECTRICAL PLANS FOR ADDITIONAL INFORMATION

SAF-1 SEQUENCE OF OPERATION:

UPON ACTIVATION OF THE MANUAL WALL MOUNTED EMERGENCY SWITCH, SAF-1 MOTORIZED DAMPER SHALL OPEN. UPON OPENING OF THE MOTORIZED DAMPER, SAF-1 AND BOTH EF-A TOILET EXHAUST, EF-B FANS SHALL START. RELIEF AIR FOR THE FACILITY WILL BE VIA THE EF-A, & EF-B EXHAUST FANS AND THE VARIOUS RELIEF AIR GRILLES IN EACH CLASSROOM. UPON A DEACTIVATION OF THE WALL MOUNTED EMERGENCY SWITCH, SAF-1 SHALL SHUTDOWN, THEIR MOTORIZED DAMPERS SHALL CLOSE, AND BOTH EF-A & EF-B EXHAUST FANS SHALL RETURN TO THEIR NORMAL OPERATING REQUIREMENTS. PROVIDE SIGNAGE OF THE TYPE SPECIFIED IN THE ARCHITECTURAL PORTION OF THE SPECIFICATIONS ADJACENT TO THE EMERGENCY SWITCH (WHITE LETTERS WITH RED BACKGROUND. SIGNAGE SHALL READ AS FOLLOWS: "UPON FAILURE OF POWER TO THE FACILITY DURING A WEATHER EVENT, PUSH BUTTON TO START FAN. UPON PASSAGE OF THE WEATHER EVENT, PULL TO STOP FAN. DO NOT OPERATE FAN UNDER NORMAL CONDITIONS".

ZGOUVAS, EIRING & ASSOCIATES
CONSULTING ENGINEERS
800 S McDONOUGH STREET
MONTGOMERY, AL. 36104
334.263.4406
ZEA PROJECT NUMBER 22-170

THE INFORMATION CONTAINED IN THIS DRAWING IS COPYRIGHTED MATERIAL AND SHALL NOT BE REPRODUCED, DIGITIZED, OR REVISED, IN WHOLE OR IN PART, WITHOUT THE WRITTEN CONSENT OF ZGOUVAS, EIRING AND ASSOCIATES

CLASSROOM ADDITION
FOR
UNION HILL SCHOOL
SOMERVILLE, ALABAMA
FOR THE
MORGAN COUNTY BOARD OF EDUCATION

McKEE and ASSOCIATES
ARCHITECTS, INC.
631 SOUTH HULL STREET , MONTGOMERY , ALABAMA 36104 (334) 834-9933

ALABAMA No. 23369 PROFESSIONAL ENGINEER 10.13.22 JAMES EIRING

SHEET TITLE : HVAC DETAILS

MCKEE JOB # : 22-134

DRAWN BY : C. WARD
CHECKED BY : T. ZGOUVAS

DATE: 10.13.2022

REVISED DATE:

REVISED DATE:

REVISED DATE:

SHEET NO. : M7

OUTDOOR AIR AND EXHAUST CALCULATIONS

HP-A	Area	Peo/1000SF	# People	CFM/SF	Area CFM	CFM/Person	People CFM	Voz	Ez	# Fixtures	CFM/Fixt	CFM/SF	Min Exhaust	Supply Air	Zp EQ 4-5
CLASSROOM 116	806	35	29	0.12	97	10	290	387	1				0	1100	0.351818
SUPPLIES 116B	65	0	0	0.12	8	0	0	8	1				0	100	0.08
Total			29		97		290								
							Cumulative CFM	395							

OUTDOOR AIR AND EXHAUST CALCULATIONS

HP-B	Area	Peo/1000SF	# People	CFM/SF	Area CFM	CFM/Person	People CFM	Voz	Ez	# Fixtures	CFM/Fixt	CFM/SF	Min Exhaust	Supply Air	Zp EQ 4-5
CLASSROOM 103	395	35	14	0.12	48	10	140	188	1				0	700	0.268571
SUPPLIES 103B	50	0	0	0.12	6	0	0	6	1				0	100	0.06
Total			14		48		140								
							Cumulative CFM	194							

OUTDOOR AIR AND EXHAUST CALCULATIONS

HP-C	Area	Peo/1000SF	# People	CFM/SF	Area CFM	CFM/Person	People CFM	Voz	Ez	# Fixtures	CFM/Fixt	CFM/SF	Min Exhaust	Supply Air	Zp EQ 4-5
CORRIDOR 112	1230	0	0	0.06	74	0	0	74	1				0	600	0.123333
CLOSET 106	64	0	0	0.12	8	0	0	8	1				0	100	0.08
STAFF 115										1	70		70	50	0
BOYS 107 / GIRLS 105										6	70		420	250	0
Total			0		74		0								
							Cumulative CFM	82							

Max "Zp"	0.123333
"Ev"	1
"Vou" Total OSA EQ 4-6	82
Total Building Occupancy	10
Zone Occupancy	10
"D" from EQ 4-7	1
"Vot" Equation 4-8	82
TOTAL OSA	82

OUTDOOR AIR AND EXHAUST CALCULATIONS

HP-D	Area	Peo/1000SF	# People	CFM/SF	Area CFM	CFM/Person	People CFM	Voz	Ez	# Fixtures	CFM/Fixt	CFM/SF	Min Exhaust	Supply Air	Zp EQ 4-5
WORKROOM 102	585	25	15	0.06	36	5	75	111	1				0	600	0.185
Total			15		36		75								
							Cumulative CFM	111							

OUTDOOR AIR AND EXHAUST CALCULATIONS

HP-E	Area	Peo/1000SF	# People	CFM/SF	Area CFM	CFM/Person	People CFM	Voz	Ez	# Fixtures	CFM/Fixt	CFM/SF	Min Exhaust	Supply Air	Zp EQ 4-5
CORRIDOR 207	1230	0	0	0.06	74	0	0	74	1				0	700	0.105714
BOYS 205 / GIRLS 203										6	70		420	300	0
JAN 201										1	70		70	0	0
Total			0		74		0								
							Cumulative CFM	74							

Max "Zp"	0.105714
"Ev"	1
"Vou" Total OSA EQ 4-6	74
Total Building Occupancy	10
Zone Occupancy	10
"D" from EQ 4-7	1
"Vot" Equation 4-8	74
TOTAL OSA	74

OUTDOOR AIR AND EXHAUST CALCULATIONS

HP-F	Area	Peo/1000SF	# People	CFM/SF	Area CFM	CFM/Person	People CFM	Voz	Ez	# Fixtures	CFM/Fixt	CFM/SF	Min Exhaust	Supply Air	Zp EQ 4-5
CORRIDOR 207	910	0	0	0.06	55	0	0	55	1				0	800	0.06875
Total			0		55		0								
							Cumulative CFM	55							

CLASSROOM ADDITION
FOR
UNION HILL SCHOOL
SOMERVILLE, ALABAMA
FOR THE
MORGAN COUNTY BOARD OF EDUCATION

McKEE and ASSOCIATES
ARCHITECTS, INC.
631 SOUTH HULL STREET, MONTGOMERY, ALABAMA 36104 (334) 834-9933

ALABAMA No. 23369 PROFESSIONAL 10.13.22 ENGINEER J. R. EIRING

SHEET TITLE : O.A. CALCULATIONS

MCKEE JOB # : 22-134

DRAWN BY : C. WARD
CHECKED BY : T. ZGOUVAS

DATE: 10.13.2022

REVISED DATE:

REVISED DATE:

REVISED DATE:

SHEET NO. : M8

ZEA
ZGOUVAS, EIRING & ASSOCIATES
CONSULTING ENGINEERS
800 S McDONOUGH STREET
MONTGOMERY, AL. 36104
334.263.4406
ZEA PROJECT NUMBER 22-170

THE INFORMATION CONTAINED IN THIS DRAWING IS COPYRIGHTED MATERIAL AND SHALL NOT BE REPRODUCED, DIGITIZED, OR REVISED, IN WHOLE OR IN PART, WITHOUT THE WRITTEN CONSENT OF ZGOUVAS, EIRING AND ASSOCIATES

CEILING OUTLETS

- A (2) — RECESSED 2'x4' LAY-IN FIXTURE, MARK 'A' CIRCUIT NUMBER 2, TYPICAL.
- A (2) — RECESSED 2'x4' LAY-IN FIXTURE, MARK 'A' CIRCUIT NUMBER 2, TYPICAL, 'EMERGENCY POWER'.
- A (2) — RECESSED 1'x4' LAY-IN FIXTURE, MARK 'A' CIRCUIT NUMBER 2, TYPICAL.
- A (2) — RECESSED 1'x4' LAY-IN FIXTURE, MARK 'A' CIRCUIT NUMBER 2, TYPICAL, 'EMERGENCY POWER'.
- A (2) — RECESSED 2'x2' LAY-IN FIXTURE, MARK 'A' CIRCUIT NUMBER 2, TYPICAL.
- A (2) — RECESSED 2'x2' LAY-IN FIXTURE, MARK 'A' CIRCUIT NUMBER 2, TYPICAL, 'EMERGENCY POWER'.
- A (2) — SURFACE OR PENDANT MOUNTED LINEAR STRIP FIXTURE, MARK 'A' CIRCUIT NUMBER 2, TYPICAL.
- A (2) 2 — SURFACE OR PENDANT MOUNTED LINEAR STRIP FIXTURE, MARK 'A' CIRCUIT NUMBER 2, TYPICAL, 'EMERGENCY POWER'.
- A (2) — RECESSED OR SURFACE MOUNTED DOWNLIGHT, MARK 'A' CIRCUIT NUMBER 2, TYPICAL.
- A 2 — RECESSED OR SURFACE MOUNTED DOWNLIGHT, MARK 'A' CIRCUIT NUMBER 2, TYPICAL, 'EMERGENCY POWER'.
- A (2) — RECESSED OR SURFACE MOUNTED ROUND FIXTURE, MARK 'A' CIRCUIT NUMBER 2, TYPICAL.
- A 2 — RECESSED OR SURFACE MOUNTED ROUND FIXTURE, MARK 'A' CIRCUIT NUMBER 2, TYPICAL. 'EMERGENCY POWER'.
- CEILING MOUNTED SINGLE FACE EXIT SIGN, ARROWS AS SHOWN ON DRAWINGS.
- CEILING MOUNTED DOUBLE FACE EXIT SIGN, ARROWS AS SHOWN ON DRAWINGS.
- CEILING MOUNTED JUNCTION BOX.
- DUPLEX RECEPTACLE – 20AMP., 125 VOLT, 2 POLE, 3 WIRE GROUNDED TYPE, NEMA 5-20R. CEILING MOUNTED.
- G DUPLEX RECEPTACLE – 20AMP., 125 VOLT, GFI, 2 POLE, 3 WIRE GROUNDED TYPE, NEMA 5-20R. CEILING MOUNTED.
- V DUPLEX RECEPTACLE – 20AMP., 125 VOLT, GFI, 2 POLE, 3 WIRE GROUNDED TYPE, NEMA 5-20R. CEILING MOUNTED. MOUNT IN 4"x4"x2" BOX. PROVIDE STEEL BARRIER BETWEEN CATV/RECEPTACLE AND CONNECTOR WITH BUSHING FOR CATV CABLE.
- AD CEILING MOUNTED JUNCTION BOX FOR AUTOMATIC DOORS.
- JUNCTION BOX WITH FLEXIBLE CONNECTION TO EQUIPMENT.
- JUNCTION BOX WITH FLEXIBLE CONNECTION TO FIXTURE.

WALL OUTLETS

- A (2) 1 — WALL MOUNTED FIXTURE, MARK 'A' CIRCUIT NUMBER 2, TYPICAL.
- A 2 — WALL MOUNTED FIXTURE, MARK 'A' CIRCUIT NUMBER 2, TYPICAL, 'EMERGENCY POWER'.
- WALL MOUNTED SINGLE FACE EXIT SIGN, ARROWS AS SHOWN ON DRAWINGS.
- (2) A — WALL MOUNTED FIXTURE, MARK 'A' CIRCUIT NUMBER 2, TYPICAL.
- 2 A — WALL MOUNTED FIXTURE, MARK 'A' CIRCUIT NUMBER 2, TYPICAL, 'EMERGENCY POWER'.
- BATTERY OPERATED EMERGENCY FIXTURE.
- DUPLEX RECEPTACLE – 20AMP., 125 VOLT, 2 POLE, 3 WIRE GROUNDED TYPE, NEMA 5-20R. MOUNT 18" A.F.F. UNLESS OTHERWISE NOTED.
- G DUPLEX RECEPTACLE – 20AMP., 125 VOLT, GFI, 2 POLE, 3 WIRE GROUNDED TYPE, NEMA 5-20R. MOUNT 18" A.F.F. UNLESS OTHERWISE NOTED.
- W DUPLEX RECEPTACLE – 20AMP., 125 VOLT, GFI, 2 POLE, 3 WIRE GROUNDED TYPE, NEMA 5-20R. MOUNT 18" A.F.F. UNLESS OTHERWISE NOTED, PROVIDE WEATHERPROOF WHILE IN USE BOX FOR RECEPTACLE.
- SB DUPLEX RECEPTACLE – 20AMP., 125 VOLT, GFI, 2 POLE, 3 WIRE GROUNDED TYPE, NEMA 5-20R. MOUNT AS DIRECTED FOR SMARTBOARD.
- DUPLEX RECEPTACLE – 20AMP., 125 VOLT, 2 POLE, 3 WIRE GROUNDED TYPE, NEMA 5-20R. MOUNT 6" ABOVE COUNTER.
- G DUPLEX RECEPTACLE – 20AMP., 125 VOLT, GFI, 2 POLE, 3 WIRE GROUNDED TYPE, NEMA 5-20R. MOUNT 6" ABOVE COUNTER.
- QUADRAPLEX RECEPTACLE – 20AMP., 125 VOLT, 2 POLE, 3 WIRE GROUNDED TYPE, NEMA 5-20R. MOUNT 18" A.F.F. UNLESS OTHERWISE NOTED.
- G QUADRAPLEX RECEPTACLE – 20AMP., 125 VOLT, GFI, 2 POLE, 3 WIRE GROUNDED TYPE, NEMA 5-20R. MOUNT 18" A.F.F. UNLESS OTHERWISE NOTED.
- QUADRAPLEX RECEPTACLE – 20AMP., 125 VOLT, 2 POLE, 3 WIRE GROUNDED TYPE, NEMA 5-20R. MOUNT 6" ABOVE COUNTER.
- G QUADRAPLEX RECEPTACLE – 20AMP., 125 VOLT, GFI, 2 POLE, 3 WIRE GROUNDED TYPE, NEMA 5-20R. MOUNT 6" ABOVE COUNTER.
- QUADRAPLEX RECEPTACLE – 20AMP., 125 VOLT, GFI, 2 POLE, 3 WIRE GROUNDED TYPE, NEMA 5-20R. MOUNT 26" A.F.F. TO CENTER LINE FOR DRINKING FOUNTAIN.
- TP DUPLEX RECEPTACLE – 20AMP., 125 VOLT, 2 POLE, 3 WIRE GROUNDED TYPE, NEMA 5-20R. MOUNT 18" A.F.F. UNLESS OTHERWISE NOTED, TAMPER-PROOF.
- CM DUPLEX RECEPTACLE – 20AMP., 125 VOLT, GFI. 2 POLE, 3 WIRE GROUNDED TYPE, NEMA 5-20R. CONNECTION FOR COFFEE MAKER, COORDINATE MOUNTING HEIGHT WITH ARCHITECTURAL ELEVATIONS.
- MW DUPLEX RECEPTACLE – 20AMP., 125 VOLT, GFI. 2 POLE, 3 WIRE GROUNDED TYPE, NEMA 5-20R. CONNECTION FOR MICROWAVE, COORDINATE MOUNTING HEIGHT WITH ARCHITECTURAL ELEVATIONS.
- R DUPLEX RECEPTACLE – 20AMP., 125 VOLT, GFI. 2 POLE, 3 WIRE GROUNDED TYPE, NEMA 5-20R. CONNECTION FOR REFRIGERATOR, COORDINATE MOUNTING HEIGHT WITH ARCHITECTURAL ELEVATIONS.
- UCR DUPLEX RECEPTACLE – 20AMP., 125 VOLT, GFI. 2 POLE, 3 WIRE GROUNDED TYPE, NEMA 5-20R. CONNECTION FOR UNDER COUNTER REFRIGERATOR, COORDINATE MOUNTING HEIGHT WITH ARCHITECTURAL ELEVATIONS.
- V DUPLEX RECEPTACLE – 20AMP., 125 VOLT, GFI. 2 POLE, 3 WIRE GROUNDED TYPE, NEMA 5-20R. MOUNT IN 4"x4"x2" BOX. PROVIDE STEEL BARRIER BETWEEN CATV/RECEPTACLE AND CONNECTOR WITH BUSHING FOR CATV CABLE.
- SINGLE RECEPTACLE – SEE DRAWINGS FOR NEMA CONFIGURATION.
- WALL MOUNTED JUNCTION BOX SIZE NOTED OR REQUIRED WITH BLANK SCREW COVER.
- WALL MOUNTED JUNCTION BOX SIZE NOTED OR REQUIRED WITH BLANK SCREW COVER AND FLEXIBLE CONDUIT CONNECTION.
- P WALL MOUNTED JUNCTION BOX SIZE NOTED OR REQUIRED WITH BLANK SCREW COVER AND FLEXIBLE CONDUIT POWER CONNECTION FOR PREWIRED MODULAR FURNITURE. 3#10 & 3#10(NEUTRAL) & 1#10 (GROUND) 1"C.
- PLUGMOLD ASSEMBLY WITH RECEPTACLES SPACED EVERY 24" ON CENTER. ALTERNATE CIRCUITS FOR EVERY OTHER RECEPTACLE. VERIFY LENGTH ON FLOOR PLANS. PROVIDE 1-1/4"C. FOR COMMUNICATION CABLING UP ABOVE ACCESSIBLE CEILING. SIMILAR TO WIREMOLD #4000 DESIGNER SERIES.

* ALL RECEPTACLES MOUNTED IN STUDENT AREAS SHALL BE TAMPER PROOF RECEPTACLES.

WALL SWITCHES (MOUNT 48" A.F.F. TO TOP OF BOX)

- $ A.C. TYPE, SINGLE POLE, 20AMP, 120/277 VOLT.
- 3$ A.C. TYPE, 3-WAY, 20AMP, 120/277V VOLT.
- 4$ A.C. TYPE, 4-WAY, 20AMP, 120/277V VOLT.
- °$ A.C. TYPE, 4-WAY, 20AMP, 120/277V VOLT, CONTROLS ZONE 'o'.
- IM$ ICE MACHINE DISCONNECT SWITCH, INSTALL RECESSED JUNCTION BOX WITH FUSE BLOCK AND FUSES (SIZE PER MANUFACTURER), AT 14"H. (COORDINATE LOCATION WITH EQUIPMENT TO BE USED). INSTALL MANUAL MOTOR SWITCH AT 48"H. ENGRAVE JUNCTION BOX COVER TO READ 'ICE MACHINE FUSES'.
- $$ TWO SWITCHES IN TWO GANG BOX UNDER ONE WALLPLATE (NOTE: IF SWITCHES ARE CONNECTED TO DIFFERENT PANELBOARDS PROVIDE STEEL BARRIER BETWEEN SWITCHES.).
- MC $ MOMENTARY CONTACT, 15A., 3-POSITION.
- TS $ MOTOR RATED TOGGLE SWITCH DISCONNECT, WITH THERMAL OVERLOADS, A.C. TYPE, 20AMP, 120/277 VOLT.
- M $ MOTOR RATED TOGGLE SWITCH DISCONNECT, WITHOUT THERMAL OVERLOADS, A.C. TYPE, 20AMP, 120/277 VOLT.
- M 30/1 $ MOTOR RATED TOGGLE SWITCH DISCONNECT, WITH THERMAL OVERLOADS, A.C. TYPE, 30AMP, 120/277 VOLT.
- RL $ RAISE/LOWER SWITCH FOR PROJECTION SCREEN.

LIGHTING CONTROLS

- OS — CEILING MOUNTED OCCUPANCY SENSOR.
- H OS — CEILING MOUNTED OCCUPANCY SENSOR FOR HIGH CEILINGS.
- PP — POWER PACK FOR OCCUPANCY SENSOR.
- L1 — ROOM CONTROLLER – 1 ZONE DIMMING.
- L2 — ROOM CONTROLLER – 2 ZONE DIMMING.
- L3 — ROOM CONTROLLER – 3 ZONE DIMMING.
- EL — U.L. 924 TRANSFER DEVICE TO BRING DIMMED FIXTURES TO 100%
- RC — ROOM CONTROLLER – ON/OFF NO DIMMING.
- D1 — WALL DIMMER – ON/OFF & 0-10V 1-ZONE DIMMING.
- D2 — WALL DIMMER – ON/OFF & 0-10V 2-ZONE DIMMING.
- D3 — WALL DIMMER – ON/OFF & 0-10V 2-ZONE DIMMING.
- $L — LOW VOLTAGE SWITCH, 2-BUTTON.
- $L2 — LOW VOLTAGE SWITCH CONNECTED TO LIGHTING CONTROL PANEL, 2-BUTTON.
- $L4 — LOW VOLTAGE SWITCH CONNECTED TO LIGHTING CONTROL PANEL, 4-BUTTON.
- $O1 — OCCUPANCY SENSOR WALL SWITCH, DUAL TECHNOLOGY, ON/OFF.
- $O2 — OCCUPANCY SENSOR WALL SWITCH, DUAL TECHNOLOGY, ON/OFF, RAISE LOWER.
- $T — DIGITAL TIME SWITCH.
- PUSH BUTTON, TOGGLE SWITCH, ROTARY SWITCH, ETC., FURNISHED WITH EQUIPMENT BY OTHER, INSTALLED AND WIRED BY THE ELECTRICAL CONTRACTOR.
- P — PHOTOCELL, TORK MODEL 5231 (120V), TWIST RECEPTACLE: TORK 2421.

*COORDINATE WITH LIGHTING CONTROL DETAILS FOR MORE REQUIREMENTS.

BRANCH CIRCUITING

- RUN CONCEALED UNDER FLOOR OR IN GROUND SLAB.
- RUN CONCEALED IN CEILING OR WALLS.
- EXISTING – REMOVE IF EXPOSED, ABANDON IF CONCEALED, REMOVE ALL CONDUCTORS.
- SURFACE MOUNTED CONDUIT, RUN PARALLEL OR PERPENDICULAR TO BUILDING LINES.
- E — EMERGENCY.
- LIQUID-TIGHT FLEXIBLE CONDUIT CONNECTION.
- LA — HOMERUN TO PANEL. ANY CIRCUIT WITHOUT FURTHER IDENTIFICATION INDICATES 2#12 & 1#12 GROUND – 3/4"C. 3#12 & 1#12 GROUND – 3/4"C, 4#12 & 1#12 GROUND – 3/4"C, ETC AS PER NEC. LETTERS INDICATE PANELBOARD DESIGNATION.
- 10 LA — HOMERUN TO PANEL. ANY CIRCUIT WITHOUT FURTHER IDENTIFICATION INDICATES 2#10 & 1#10 GROUND – 3/4"C. 3#10 & 1#10 GROUND – 3/4"C, 4#10 & 1#10 GROUND – 3/4"C, ETC AS PER NEC. LETTERS INDICATED PANELBOARD DESIGNATION.
- 8 LA — HOMERUN TO PANEL. ANY CIRCUIT WITHOUT FURTHER IDENTIFICATION INDICATES 2#10 & 1#10 GROUND – 3/4"C. 3#10 & 1#10 GROUND – 3/4"C, 4#10 & 1#10 GROUND – 3/4"C, ETC AS PER NEC. LETTERS INDICATED PANELBOARD DESIGNATION.
- 6 — WHERE A NUMBER IS SHOWN NEXT TO OR ON THE CIRCUIT OR HOMERUN, THE NUMBER INDICATES CONDUCTOR SIZE OTHER THAN #12 – NUMBER #6 CONDUCTORS INDICATED. PROVIDE GROUND SIZED PER NEC TABLE 250 FOR MAX AMPACITY OF CONDUCTOR SIZE AS SHOWN. SIZE CONDUIT PER NEC ANNEX C.
- RISER: UP, RUNNING TO SOURCE.
- RISER: DOWN, RUNNING TO SOURCE.

FIRE ALARM

- FACP — FIRE ALARM SYSTEM CONTROL PANEL.
- ANN — FIRE ALARM SYSTEM REMOTE ANNUNCIATOR.
- FPC — FIRE ALARM SYSTEM REMOTE ANNUNCIATOR.
- NAC — FIRE ALARM SYSTEM NOTIFICATION APPLIANCE CIRCUIT.
- FJ — JUNCTION BOX WITH HINGED COVER AND TERMINAL STRIP. 24"x24"x8" MINIMUM SIZE. SIZE LARGER AS REQUIRED.
- F — MINIMUM 3/4" CONDUIT UON. PROVIDE NUMBER AND TYPE OF CONDUCTORS AS REQUIRED BY MANUFACTURER. PROVIDE LARGER CONDUIT IF REQUIRED BY NEC.
- F — FIRE ALARM SYSTEM MANUAL PULL STATION.
- S — FIRE ALARM SYSTEM VOICE EVAC SPEAKER.
- S R — FIRE ALARM SYSTEM VOICE EVAC SPEAKER/STROBE.
- F — FIRE ALARM SYSTEM COMBINATION CHIME AND LIGHT.
- F — FIRE ALARM SYSTEM ALARM SIGNAL LIGHT.
- H — FIRE ALARM SYSTEM SIGNAL HORN.
- H R — FIRE ALARM SYSTEM SIGNAL HORN/STROBE.
- WP H R — FIRE ALARM SYSTEM SIGNAL HORN/STROBE. WEATHERPROOF.
- SS — FIRE ALARM SYSTEM SUPERVISORY SWITCH.
- TS — FIRE ALARM SYSTEM TAMPER SWITCH.
- FS — FIRE ALARM SYSTEM FLOW SWITCH.
- HD — FIRE ALARM SYSTEM AUTOMATIC HEAT DETECTOR, 135 DEGREE/RATE OF RISER TYPE, CEILING MOUNTED.
- T HD — FIRE ALARM SYSTEM AUTOMATIC HEAT DETECTOR, 190 DEGREE/RATE OF RISER TYPE, CEILING MOUNTED.
- SD — FIRE ALARM SYSTEM AUTOMATIC SMOKE DETECTOR, CEILING MOUNTED.
- E SD — FIRE ALARM SYSTEM AUTOMATIC SMOKE DETECTOR, CEILING MOUNTED, ELEVATOR RECALL.
- CD — FIRE ALARM SYSTEM AUTOMATIC CARBON MONOXIDE DETECTOR, CEILING MOUNTED.
- DD — FIRE ALARM SYSTEM AUTOMATIC AIR DUCT SMOKE DETECTOR MOUNTED IN MECHANICAL DUCT.
- W DD — FIRE ALARM SYSTEM AUTOMATIC AIR DUCT SMOKE DETECTOR MOUNTED IN MECHANICAL DUCT. PROVIDE IN WEATHER PROOF ENCLOSURE.
- RP DD — FIRE ALARM SYSTEM AUTOMATIC AIR DUCT SMOKE DETECTOR MOUNTED IN MECHANICAL DUCT. PROVIDE AUXILIARY CONTACTS TO INITIATE SMOKE DAMPER CLOSURE, ADDRESSABLE. REMOTE ALARM PILOT LIGHT WITH KEY TEXT SWITCH.
- RT — FIRE ALARM SYSTEM REMOTE TEST STATION.
- ZC — FIRE ALARM SYSTEM ZONE MODULE, CONTROL TYPE.
- ZM — FIRE ALARM SYSTEM ZONE MODULE, MONITOR TYPE.
- ZS — FIRE ALARM SYSTEM ZONE MODULE, SIGNAL TYPE.
- FIRE ALARM SYSTEM MAGNETIC DOOR HOLDERS.
- F — FIRE ALARM SYSTEM SUPERVISED CIRCUITING IN CONDUIT, RACEWAY INSTALLED CONCEALED
- FIRE ALARM SYSTEM FIREMANS PHONE, MOUNTED 48" A.F.F. TO CENTERLINE.

PANELS AND POWER

- PANELBOARD SURFACE MOUNTED.
- PANELBOARD FLUSH MOUNTED.
- CON — CONTROL PANEL.
- NON-FUSIBLE DISCONNECT SWITCH, XX/YY/ZZ WHERE X INDICATES AMPERAGE, Y INDICATES # OF POLES, AND Z INDICATES NEMA RATING.
- FUSIBLE DISCONNECT SWITCH, XX/YY/ZZ WHERE X INDICATES AMPERAGE, Y INDICATES # OF POLES, AND Z INDICATES NEMA RATING. FURNISH AND INSTALL FUSES PER MANUFACTURER'S RECOMMENDATIONS.
- CIRCUIT BREAKER, XX/YY WHERE X INDICATES AMPERAGE, Y INDICATES # OF POLES.
- MAGNETIC MOTOR STARTER, SIZE 1.
- COMBINATION NON-FUSIBLE DISCONNECT SWITCH AND STARTER, XX/YY/ZZ WHERE X INDICATES AMPERAGE, Y INDICATES # OF POLES, AND Z INDICATES NEMA RATING.
- COMBINATION FUSIBLE DISCONNECT SWITCH AND STARTER, XX/YY/ZZ WHERE X INDICATES AMPERAGE, Y INDICATES # OF POLES, AND Z INDICATES NEMA RATING. FURNISH AND INSTALL FUSES PER MANUFACTURER'S RECOMMENDATIONS.
- 2 — MOTOR: SHOWN 2HP (TYPICAL)
- CIRCUIT BREAKER
- AUTOMATIC TRANSFER SWITCH
- PAD MOUNTED TRANSFORMER
- LOAD BREAK CONNECTION
- GROUND
- METER
- GROUNDING ELECTRODE CONNECTION.
- ENGINE GENERATOR.

MISCELLANEOUS EQUIPMENT

- C — CONTACTOR
- R — RELAY
- T — TRANSFORMER
- SITE LIGHTING POLE
- EXTERIOR POST TOP LIGHT
- WH — WATER HEATER
- UH — UNIT HEATER
- EF — EXHAUST FAN
- GA — GENERATOR ANNUNCIATOR PANEL
- VAV — VARIABLE AIR VOLUME BOX
- ELE — ELEVATOR CONTROLLER
- VFD — VARIABLE FREQUENCY DRIVE
- GEN — GENERATOR ANNUNCIATOR PANEL
- ATS — AUTOMATIC TRANSFER SWITCH
- MTS — MANUAL TRANSFER SWITCH
- TS — TIME SWITCH

DRAWING CONVENTIONS

- NEW WORK
- EXISTING TO REMAIN
- XR — EXISTING TO REMOVE
- EX — EXISTING TO REMAIN
- XRR — EXISTING TO BE RELOCATED
- XRP — EXISTING TO BE REPLACED
- XRL — EXISTING RELOCATED
- XR — EXISTING TO BE REMOVED

MISCELLANEOUS

A	AMPERE
ADA	AMERICANS WITH DISABILITIES ACT
AFF	ABOVE FINISHED FLOOR
AIC	AMPERE INTERRUPTING CAPACITY
AL	ALUMINUM
ATS	AUTOMATIC TRANSFER SWITCH
AWG	AMERICAN WIRE GAUGE
C	CONDUIT
CFCI	CONTRACTOR FURNISHED CONTRACTOR INSTALLED
CFOI	CONTRACTOR FURNISHED OWNER INSTALLED
CKT	CIRCUITS
CL	CENTER LINE
CLG	CEILING
CU	COPPER
CWP	COLD WATER PIPE
DIA	DIAMETER
EC	ELECTRICAL CONTRACTOR
EM	EMERGENCY
EMT	ELECTRIC METALLIC TUBING
EP	EXPLOSION PROOF
FMC	FLEXIBLE METAL CONDUIT
FLA	FULL LOAD AMPERES
G	GROUND
GFI	GROUND FAULT INTERRUPTER
GRC	GALVANIZED RIGID METAL CONDUIT
GRD	GROUND
H	MOUNTING HEIGHT ABOVE FINISHED FLOOR TO CENTERLINE
HP	HORSE POWER
KVA	KILOVOLT-AMPERES
KW	KILOWATT
KCMIL	THOUSAND CIRCULAR MILS
MCA	MINIMUM CIRCUIT AMPACITY
MCB	MAIN CIRCUIT BREAKER
MCC	MOTOR CONTROL CENTER
MLO	MAIN LUGS ONLY
MT	MOUNT
N	NEUTRAL
NIC	NOT IN CONTRACT
NEC	NATIONAL ELECTRICAL CODE
NEMA	NATIONAL ELECTRICAL MANUFACTURER'S ASSOC.
NFPA	NATIONAL FIRE PROTECTION ASSOCIATION
NL	NIGHT LIGHT
NTS	NOT TO SCALE
P	POLE
PF	POWER FACTOR
PH	PHASE
PNL	PANEL
PVC	PVC (POLYVINYL CHLORIDE) CONDUIT
SLD	SINGLE LINE DIAGRAM
TBB	TELEPHONE BACKBOARD
TVSS	TRANSIENT VOLTAGE SURGE SUPPRESSORS
UL	UNDERWRITER'S LABORATORY
UNO	UNLESS NOTED OTHERWISE
V	VOLTAGE
W	WIRE
WP	WEATHERPROOF
#	NUMBER
3R	NEMA 3R WEATHERPROOF ENCLOSURE
4X	NEMA 4X WEATHERPROOF/CORROSION ENCLOSURE

COMMUNICATIONS

- WALL OUTLET – SEE DETAILS, SHEET E8.1.
- WALL OUTLET – SEE DETAILS, SHEET E8.1.
- C — CEILING MOUNTED OUTLET – SEE DETAILS, SHEET E8.1
- TBB — TELEPHONE BACKBOARD – 3/4" EXTERIOR GRADE PLYWOOD WITH TWO COATS OF INSULATING VARNISH, SIZE AS SHOWN.
- WIRELESS ACCESS POINT – PROVIDED BY OWNER INSTALLED BY ELECTRICAL CONTRACTOR. SEE SHEET E8.1 FOR DETAILS.
- COMMUNICATIONS RACK AND CABINET. SEE AUXILIARY SHEETS FOR ADDITIONAL INFORMATION AND REQUIREMENTS.

PAGING AND INTERCOM SYSTEM

- S A — 2'X2' DROP IN IP CEILING SPEAKER- 2 WAY/INTERCOM – VALCOM #VIP-422A-SA OR EQUALS PROVIDE CAT 6 CONNECTION BACK TO IDF.
- S B — 2'X2' DROP IN IP CEILING SPEAKER- 1 WAY/PAGING – VALCOM #VIP-402A-SA OR EQUALS PROVIDE CAT 6 CONNECTION BACK TO IDF.
- S C — FLUSH WALL MOUNTED IP CLOCK/SPEAKER- 2 WAY/INTERCOM – VALCOM #VIP-429A-D-SA OR EQUALS SPEAKER TO BE PROVIDED IN RECESSED WALL ENCLOSURE AND COVER PROVIDE CAT 6 CONNECTION BACK TO IDF.
- FUTURE I.T. DEVICE. PROVIDE 2 GANG BOX WITH SINGLE GANG PLASTER RING AND BLANK COVER. EXTEND 3/4" EMPTY CONDUIT WITH PULLSTRING TO ABOVE ACCESSIBLE CEILING, 54" A.F.F. TYPICAL.

CLASSROOM ADDITION
FOR
UNION HILL SCHOOL
SOMERVILLE, ALABAMA
FOR THE
MORGAN COUNTY BOARD OF EDUCATION

McKEE and ASSOCIATES
ARCHITECTURE and INTERIOR DESIGN
631 SOUTH HULL STREET MONTGOMERY, ALABAMA 36104 (334) 834-9933

Charles M. Brewer
No. 37959
PROFESSIONAL
10-13-2022
ENGINEER
CHARLES M. BREWER

SHEET TITLE : ELECTRICAL LEGEND

MCKEE JOB # : 22-134

DRAWN BY : CMB

DATE: 10.13.2022

REVISED DATE:

REVISED DATE:

REVISED DATE:

Gunn & Associates, P.C.
Consulting Engineers
3102 Highway 14
Millbrook, AL 36054
Tel: 334.285.1273
1200 Providence Park, Suite 200
Birmingham, AL 35242
GA#22-065

SHEET NO. : E0.1

CCTV SYSTEM

SECURITY CAMERA. SINGLE GANG JUNCTION BOX WITH 3/4" CONDUIT TO ABOVE ACCESSIBLE CEILING IN CORRIDOR. WHERE CAMERAS ARE INDICATED IN CORRIDORS WITH LAY-IN CEILINGS, NO JUNCTION BOX IS REQUIRED. SEE SHEET E8.1 DETAIL.

RECEPTACLES:

ALL 120V RECEPTACLES ON THIS PROJECT SHALL BE TAMPER PROOF TYPE WHERE REQUIRED BY THE NATIONAL ELECTRIC CODE.

GENERAL ELECTRICAL NOTES:

1. THESE DRAWINGS ARE A PART OF A COMPLETE SET OF ARCHITECTURAL/ENGINEERING CONTRACT DOCUMENTS. ELECTRICAL CONTRACTOR SHOULD REFER TO THE ARCHITECTURAL PLANS FOR WALL DEFINITIONS, ELEVATIONS, CASEWORK, REFLECTED CEILING PLAN, ETC..
2. INSTALLATION SHALL COMPLY WITH THE NATIONAL ELECTRICAL CODE, STATE AND LOCAL CODES AND MANUFACTURER'S RECOMMENDATIONS. CONTRACTOR SHALL OBTAIN AND PAY FOR ALL NECESSARY PERMITS.
3. MAINTAIN ALL CLEARANCES FOR ELECTRICAL EQUIPMENT PER THE NEC.
4. ALL SYMBOLS SHOWN ON THIS LEGEND MAY NOT BE USED.
5. ALL BRANCH CIRCUIT CONDUIT SHALL BE GALVANIZED EMT, JOINED AND TERMINATED WITH SET SCREW STEEL FITTING, 3/4" CONDUIT MINIMUM.
6. ALL DIMENSIONS INDICATED IN THESE DOCUMENTS ARE FOR REFERENCE AND COORDINATION PURPOSES ONLY. THE CONTRACTOR IS RESPONSIBLE FOR VERIFYING ALL DIMENSIONS IN THE FIELD AND COORDINATING WORK WITH OTHER TRADES TO AVOID CONFLICTS.
7. VERIFY ALL DOOR SWINGS WITH ARCHITECTURAL BEFORE ROUGH-IN OF LIGHT SWITCHES TO ENSURE PROPER SWITCH LOCATION.
8. THE LOCATION OF OUTLETS, FIXTURES AND EQUIPMENT SHOWN ON THE DRAWINGS ARE APPROXIMATE. OFFSET AS NEEDED OR AS REQUESTED BY THE OWNER. THE OWNER SHALL HAVE THE RIGHT TO RELOCATE ANY OUTLETS OR FIXTURES BEFORE THEY ARE INSTALLED WITHOUT ANY ADDITIONAL COST.
9. COORDINATE EXACT LOCATION OF ALL ELECTRICAL FLOOR DEVICES WITH ARCHITECT PRIOR TO INSTALLATION.
10. ALL ELECTRICAL RACEWAYS AND CABLING SHALL BE INSTALLED CONCEALED WITHIN THE CONFINES OF THE BUILDING FOUNDATIONS EXCEPT THOSE SPECIFICALLY SERVING LOADS OR EQUIPMENT EXTERIOR OF THE BUILDING. ALL SUCH RACEWAYS SHALL BE A MINIMUM 18" INSIDE FOUNDATIONS. POWER AND COMMUNICATIONS RACEWAYS SHALL BE SEPARATED BY A MINIMUM 18".
11. ALL CIRCUITS SHOWN CONCEALED SHALL BE RUN IN FURRED CEILING SPACES AND SHALL BE CONCEALED IN CONCRETE SLAB ONLY WHEN NO FURRED CEILING SPACE IS PROVIDED.
12. ALL CONDUITS INSTALLED UNDERFLOOR SHALL BE ROUTED UNDER STRUCTURAL CONCRETE FLOOR SLABS. CONTRACTOR SHALL NOT INSTALL CONDUITS IN CONCRETE FLOORING WITHOUT THE EXPRESS WRITTEN PERMISSION OF THE STRUCTURAL ENGINEER. CONDUITS PENETRATING THRU CONCRETE FLOORS SHALL ADHERE TO THE ELECTRICAL SPECIFICATIONS AND RECOMMENDATIONS OF THE STRUCTURAL ENGINEER.
13. ALL RACEWAYS INSTALLED ON EXTERIOR OF THE BUILDING, INCLUDING CONDUIT UNDER CANOPIES, SHALL BE GRC, EMT WILL NOT BE ACCEPTED.
14. ALL RACEWAYS SHALL BE SUPPORTED PER NEC AND AT LEAST EVERY 10' AND WITHIN 3' OF EVERY JUNCTION BOX. RACEWAYS SUPPORTED ON BOTTOM OF SECONDARY CEILING SHALL BE SUPPORTED FROM THE STRUCTURE NOT FROM THE GYPBOARD CEILING.
15. ALL EMPTY WALL MOUNTED JUNCTION BOXES SHALL BE PROVIDED WITH A WALL BLANK AND ALL EMPTY RACEWAYS SHALL BE PROVIDED WITH PULL WIRES.
16. ALL CONDUITS CROSSING EXPANSION JOINTS SHALL HAVE EXPANSION TYPE FITTINGS.
17. ALL OUTLET BOXES MOUNTED BACK-TO-BACK IN WALLS SHALL HAVE FIREPROOF SOUND INSULATING MATERIAL INSTALLED BETWEEN THE BOXES TO PREVENT SOUND TRANSMISSION FROM ONE ROOM TO THE OTHER.
18. ALL FLUSH MOUNTED PANELS SHALL HAVE 3-1" EMPTY CONDUITS STUBBED OUT ABOVE CEILING FOR FUTURE CIRCUITS.
19. PROVIDE ALL CONDUIT STUBS WITH A PROTECTIVE COLLAR.
20. INSURE THAT ALL PENETRATIONS OF FIRE WALLS AND DECKS ARE PROPERLY SEALED PER INTERNATIONAL BUILDING CODE 712 AND WITH AN UL APPROVED DEVICE OR FIRE CAULK. REFER TO ARCHITECTURAL PLANS FOR THE LOCATIONS OF RATED FIRE WALLS AND UL ASSEMBLY LOCATIONS AND TYPES AND BID ACCORDINGLY.
21. ALL UNDERGROUND CONDUIT RUNS ENTERING THE BUILDING SHALL BE SEALED TO PREVENT THE ENTRANCE OF MOISTURE.
22. ALL FLEXIBLE CONDUITS ON THE EXTERIOR, IN WET LOCATIONS OR ANY MECHANICAL ROOM SHALL BE LIQUID TIGHT WITH SUITABLE FITTINGS.
23. THE CONTRACTOR SHALL BE RESPONSIBLE FOR SEALING AROUND DEVICES, PENETRATIONS, OUTLETS, AND CONDUITS THAT PENETRATE THE WALLS ABOVE THE CEILING TO MAINTAIN SOUNDPROOFING. CONTRACTOR SHALL VERIFY THAT THE OPENING SIZES ARE LESS THAN 1/2" ON ALL SIDES OF THE PENETRATIONS. ALL OPENINGS IN EXCESS OF 1/2" SHALL BE CAULKED/ SEALED WITH SHEET ROCK MUD. THE DRYWALL CONTRACTOR SHALL BE RESPONSIBLE FOR SEALING PENETRATIONS IN PLACE WHEN THE SHEETROCK IS INSTALLED. PENETRATIONS MADE AFTER THE DRYWALL CONTRACTOR HAS COMPLETED IN AN AREA SHALL BE SEALED BY THE CONTRACTOR MAKING THE PENETRATION.
24. PLANNED INTERRUPTIONS OF UTILITY SERVICE TO ANY EXISTING FACILITY OR AREAS WITHIN ANY FACILITY AFFECTED BY THIS CONTRACTOR SHALL BE CAREFULLY PLANNED AND COORDINATED IN ADVANCE OF THE REQUESTED INTERRUPTION. THE CONTRACTOR SHALL NOT INTERRUPT SERVICES UNTIL SPECIFIED APPROVAL HAS BEEN GRANTED. THE REQUEST SHALL INDICATE SERVICES AND AREAS TO BE AFFECTED, DATE AND TIME OF INTERRUPTION AND DURATION OF OUTAGE. REQUEST FOR INTERRUPTION OF SERVICE WILL NOT BE APPROVED UNTIL ALL EQUIPMENT AND MATERIAL REQUIRED FOR THE COMPLETION OF THAT PARTICULAR PHASE OF WORK ARE ON THE JOB SITE. CONTRACTOR IS RESPONSIBLE FOR ALL OVERTIME, HOLIDAY AND WEEKEND PAY TO THEIR EMPLOYEES TO DO THIS WORK DURING SCHEDULED NON-NORMAL WORK HOURS.
25. ALL EMERGENCY LIGHTS AND EXIT SIGNS SHALL HAVE AN EMERGENCY BATTERY DRIVER CONNECTED AHEAD OF LOCAL SWITCHING, UNLESS EMERGENCY LIGHTING IS ON EMERGENCY CIRCUIT FROM A GENERATOR.
26. CONTRACTOR IS RESPONSIBLE FOR PROPER SENSITIVITY AND TIME DELAY SETTINGS FOR OCCUPANCY SENSORS. PROVIDE PROPER NUMBER OF POWER RACKS AND LOCATE POWER PACKS AND OCCUPANCY SENSORS ACCORDING TO MANUFACTURER'S RECOMMENDATIONS.
27. ALL JUNCTION BOX COVERS ABOVE THE CEILING SHALL BE CLEARLY MARKED WITH WHICH CIRCUITS OR ELECTRICAL SYSTEM THEY CONTAIN.
28. HVAC EQUIPMENT POWER WIRING SHALL BE FURNISHED AND INSTALLED BY THIS CONTRACTOR. CONTROL EQUIPMENT AND CONTROL WIRING SHALL BE FURNISHED UNDER DIVISION 15 UNLESS OTHERWISE NOTED. PROVIDE 3/4" CONDUITS WITH PULL WIRE BETWEEN INSIDE AND OUTSIDE UNITS, THERMOSTAT OUTLETS AND UNITS AND/OR MECHANICAL CONTROL PANEL AS APPLICABLE. THERMOSTAT OUTLETS SHALL BE 4" SQUARE OUTLETS, FLUSH MOUNTED WITH SINGLE GANG OR DOUBLE GANG PLASTER RINGS AS DIRECTED BY THE HVAC CONTRACTOR. COORDINATE EXACT LOCATION OF ALL EQUIPMENT, DEVICES, OUTLETS, ETC. WITH THE MECHANICAL DRAWINGS AND DIVISION 15 SPECIFICATIONS. COORDINATE WITH THE HVAC CONTRACTOR FOR EXACT LOCATIONS OF ALL EQUIPMENT.
29. ALL BRANCH CIRCUITS SHALL INCLUDE A GREEN COVERED GROUND WIRE SIZED PER NEC OR AS SHOWN. CONNECT TO EACH DEVICE AND OUTLET BOX ON THE CIRCUIT AND TO THE PANELBOARD GROUND BUS. MULTIPLE WIRE BRANCH CIRCUITS WITH COMMON NEUTRAL REQUIRE ONLY ONE GROUND WIRE. NUMBER OF WIRES SHOWN ON DRAWINGS DOES NOT INCLUDED GROUND WIRE.
30. INFORMATION SHOWN ON THESE PLANS IS TAKEN FROM EXISTING DRAWINGS AND SITE SURVEY. PRIOR TO BID, THE ELECTRICAL CONTRACTOR SHALL VISIT SITE TO SURVEY EXISTING CONDITIONS AFFECTING WORK. INCLUDE NECESSARY MATERIALS AND LABOR TO ACCOMPLISH THE ELECTRICAL WORK, INCLUDING RELOCATION OF EXISTING EQUIPMENT TO ALLOW FOR NEW CONSTRUCTION. ANY CONFLICTS SHALL BE BROUGHT TO THE ATTENTION OF THE ARCHITECT/ENGINEER AND RESOLVED PRIOR TO BID. WORK SHALL BE COORDINATED WITH ALL OTHER TRADES.
31. MULTI-POLE BREAKERS SHALL BE USED TO SERVE MULTIWIRE BRANCH CIRCUITS. MULTIPLE SINGLE POLE BREAKERS MY BE USED IN CONJUNCTION WITH U.L. LISTED HANDLE TIES THAT WILL INITIATE A COMMON DISCONNECT OF ALL UNGROUNDED CONDUCTORS. CONTRACTOR SHALL COORDINATE WITH MANUFACTURER.
32. ELECTRICAL DRAWINGS SHALL BE CAREFULLY COORDINATED WITH ELEVATOR DRAWINGS. REFER TO ELEVATOR DRAWINGS FOR EQUIPMENT LEGENDS, ROUGH-IN DIMENSIONS, AND OTHER SPECIFIC EQUIPMENT REQUIREMENTS.
33. FURNISH & INSTALL FIRE ALARM PANEL AND DEVICES WHICH CONFORM TO ALL NATIONAL, STATE, & LOCAL CODES. FIRE ALARM CONTRACTOR TO HOLD A CURRENT LICENSE TO CONDUCT BUSINESS ISSUED BY THE STATE OF ALABAMA FIRE MARSHAL'S OFFICE. PROVIDE ADDITIONAL DEVICES AS REQUIRED. PROVIDE TO ARCHITECT A COMPLETE SET OF MANUFACTURER'S SYSTEM INSTALLATION PLANS INCLUDING RISER DIAGRAM, CONDUIT & WIRING, INTERCONNECTION DIAGRAMS, DEVICE LOCATIONS AND ALL REQUIRED CONNECTIONS TO EQUIPMENT FURNISHED BY OTHERS. PROVIDE CONDUIT & WIRING AS DIRECTED BY SYSTEM SUPPLIER.

GENERAL DEMOLITION NOTES:

1. CONTRACTOR IS RESPONSIBLE FOR VERIFYING ALL EXISTING CONDITIONS PRIOR TO BID AND BIDDING ACCORDINGLY.
2. ALL DEMOLITION WORK SHALL BE PERFORMED WITH CARE NOT TO DISTURB THE OTHER EXISTING UTILITIES. IF EXISTING UTILITIES ARE DAMAGED BY THE CONTRACTOR, THE EXISTING UTILITIES ARE TO FIXED TO IT'S ORIGINAL CONDITION WITHOUT DELAY, BY AND AT THE EXPENSE OF THE CONTRACTOR.
3. LEGEND SYMBOLS ARE TYPICAL AND LOCATIONS ARE APPROXIMATE AND ARE NOT INTENDED TO LIMIT THE AMOUNT OF DEMOLITION WORK. COORDINATE WITH EXISTING CONDITIONS AND THESE NOTES AND REMOVE ALL APPLICABLE SYSTEMS AND COMPONENTS CONFLICTING WITH FINISHED DESIGN INTENT.
4. EXISTING BRANCH WIRING AND DEVICES SHOWN IS DIAGRAMMATICAL ONLY BASED ON EXISTING DRAWINGS AND SURVEYS. COORDINATE WITH ACTUAL EXISTING CONDITIONS FOR EXACT LOCATIONS.
5. TRENCH, CUT AND REMOVE EXISTING SURFACES AS REQUIRED FOR THE INSTALLATION OF ALL NEW ELECTRICAL PROVISIONS.
6. CONCEALED CONDUIT THAT CANNOT BE REMOVED DUE TO INACCESSIBILITY MAY BE ABANDONED. CONDUCTORS SHALL BE REMOVED AND CONDUIT CUT FLUSH WITH SURFACE.
7. OUTLET BOXES THAT CANNOT BE REMOVED DUE TO FLUSH MOUNTING IN PARTITIONS SHALL BE FILLED WITH GROUT, PATCHED AND FINISHED FLUSH TO MATCH EXISTING WALL SURFACE.
8. EXISTING JUNCTION BOXES MAY BE USED AS NOTED IF OF THE PROPER SIZE. MODIFICATIONS SHALL BE MADE WHEN REQUIRED SUCH AS PROVIDING EXTENSION RINGS, LOCKNUTS, BUSHINGS, ETC.
9. EXISTING PANELBOARDS SHALL BE UTILIZED TO FACILITATE THE WORK AS SHOWN ON THE DRAWINGS. NEW CIRCUIT BREAKERS SHALL BE OF THE SAME MANUFACTURER (WHENEVER POSSIBLE), FRAME SIZE, AIC RATING AND TYPE AS EXISTING. CONTRACTOR SHALL PROVIDE ALL ADDITIONAL MATERIALS FOR PANELBOARDS TO PROPERLY MEET THE INTENT OF THE DRAWINGS.
10. WHEN EXISTING DEVICES, SWITCHES, EQUIPMENT, ETC. ARE NOTED TO BE REMOVED AND THE CIRCUIT(S) SERVING SUCH ITEMS SERVES OTHER ITEMS OR DEVICES WHICH ARE TO BE MAINTAINED, THE CONTRACTOR SHALL REROUTE, EXTEND, MODIFY, ETC. EXISTING CIRCUITS AS REQUIRED TO MAINTAIN COMPLETE AND OPERATING SYSTEMS.
11. IN ALL AREA TO BE REWORKED, THE ELECTRICAL CONTRACTOR SHALL REMOVE ALL EXISTING ELECTRICAL EQUIPMENT (LIGHT FIXTURES, DEVICES, ETC) AND ALL BRANCH CIRCUITS AND FEEDERS NOT REQUIRED FOR CONTINUATION OF EXISTING CIRCUITS TO REMAIN AND REWORK THE AREA AS SHOWN. ANY CIRCUITS BROKEN BY DEMOLITION FOR THE NEW BUILDING ALTERATIONS SHALL BE REPLACED AS REQUIRED. PROVIDE BLANK COVERS FOR ALL UNUSED OUTLETS NEEDED FOR CONTINUITY OF EXISTING CIRCUITS.

CLASSROOM ADDITION
FOR
UNION HILL SCHOOL
SOMERVILLE, ALABAMA
FOR THE
MORGAN COUNTY BOARD OF EDUCATION

McKEE and ASSOCIATES
ARCHITECTURE and INTERIOR DESIGN
631 SOUTH HULL STREET MONTGOMERY, ALABAMA 36104 (334) 834-9933

Charles M. Brewer
LICENSED
No. 37169
PROFESSIONAL
10-13-2022
ENGINEER
CHARLES M. BREWER

SHEET TITLE : ELECTRICAL LEGEND NOTES

MCKEE JOB # : 22-134

DRAWN BY : CMB

DATE: 10.13.2022

REVISED DATE:

REVISED DATE:

REVISED DATE:

Gunn & Associates, P.C.
Consulting Engineers
3102 Highway 14
Millbrook, AL 36054
Tel: 334.285.1273
1200 Providence Park, Suite 200
Birmingham, AL 35242
GA#22-065

SHEET NO. : E0.2

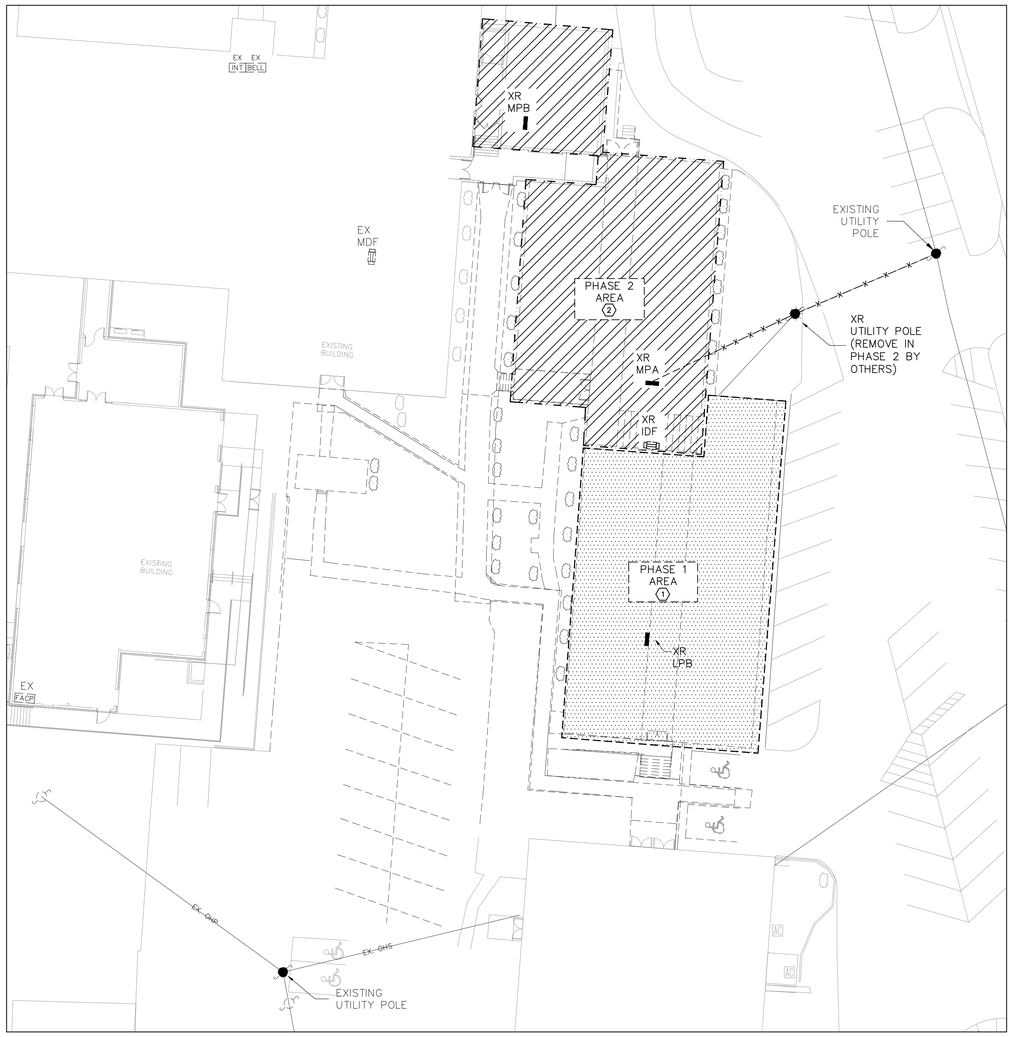

SITE PLAN - ELECTRICAL - DEMOLITION

SCALE: 1"=20'-0"

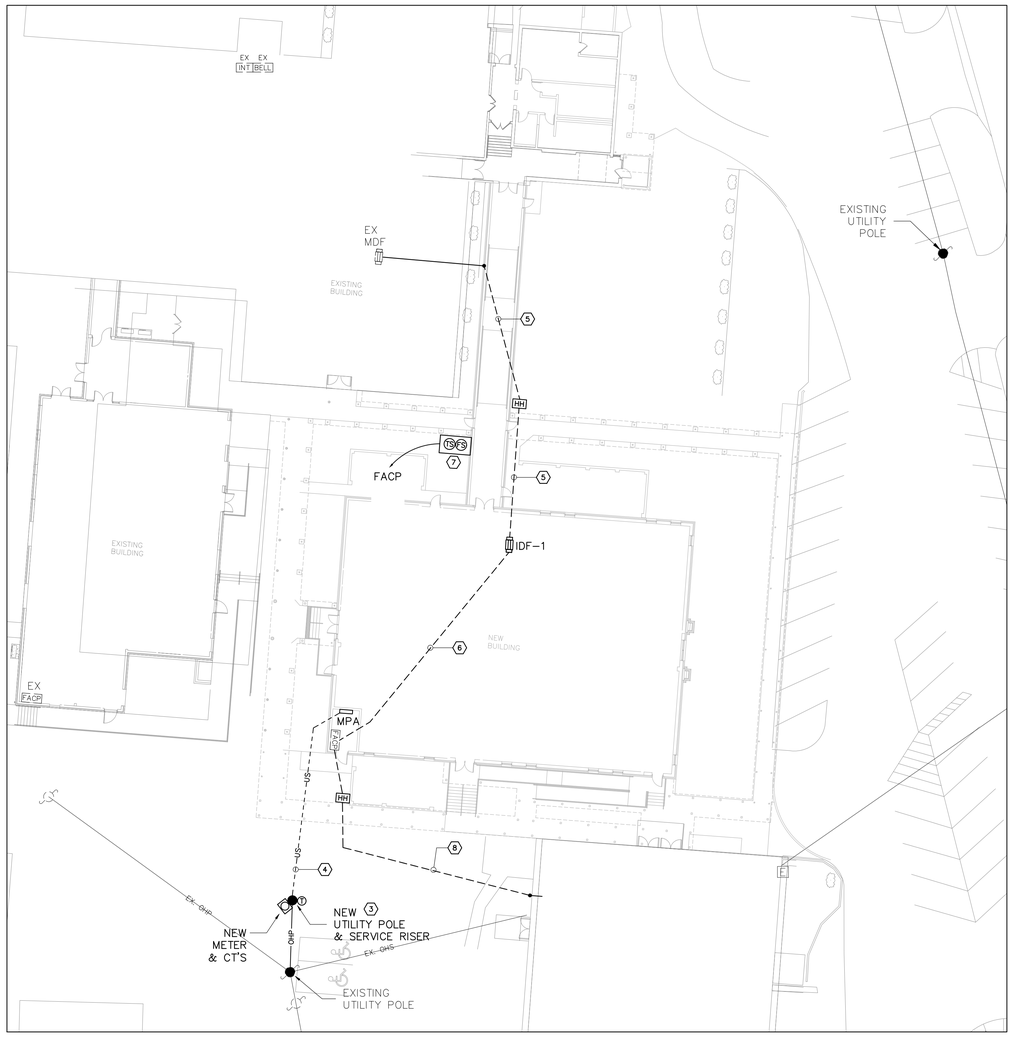

SITE PLAN - ELECTRICAL - NEW WORK

SCALE: 1"=20'-0"

UNDERGROUND UTILITY NOTES:

1. THE UNDERGROUND UTILITY PORTION OF THIS PROJECT CONSISTS OF BUT IS NOT LIMITED TO:
   a. TRENCHING/BACKFILLING FOR DUCT LINES AND CONDUIT SYSTEMS
   b. LOW VOLTAGE CONDUCTOR INSTALLATION
   c. PATCH/REPAIR ALL DAMAGED SURFACES AS A RESULT OF DUCTLINE INSTALLATIONS
2. INSTALLATION SHALL COMPLY WITH THE REQUIREMENTS OF THE NATIONAL ELECTRICAL SAFETY CODE (NESC) AND THE NATIONAL ELECTRICAL CODE (NEC).
3. ALL CONDUCTIVE PARTS OF EQUIPMENT, ENCLOSURES, SUPPORTS, FRAMES, CASES, CONDUIT SYSTEMS AND SURGE ARRESTORS, CABLE SHEATHS, CABLE SHIELDS, COMMON NEUTRALS, ETC., SHALL BE GROUNDED. UNLESS NOTED OTHERWISE CONNECTIONS BELOW GRADE SHALL BE FUSION-WELDED AND ABOVE GRADE FUSION-WELDED OR BOLTED SOLDERLESS. ALL GROUND CONDUCTORS SHALL BE COPPER.
4. ALL CLEARANCES SHALL BE MAINTAINED PER NESC AND NEC. ALL PARTS, DEVICES, EQUIPMENT, ETC. WHICH REQUIRE MAINTENANCE, ADJUSTMENT, OPERATION OR EXAMINATION DURING NORMAL NETWORK OPERATION SHALL BE ARRANGED SO AS TO BE ACCESSIBLE BY THE PROVISION OF ADEQUATE WORKING SPACES, WORKING FACILITIES AND CLEARANCES. UNLESS NOTED OTHERWISE ALL CLEARANCES ARE MEASURED FROM SURFACE TO SURFACE.
5. ALL DIMENSIONS INDICATED IN THESE DOCUMENTS ARE FOR REFERENCE AND COORDINATION PURPOSES ONLY. THE CONTRACTOR IS RESPONSIBLE FOR VERIFYING ALL DIMENSIONS IN THE FIELD.
6. UNLESS OTHERWISE SHOWN OR DIRECTED DUCT LINES SHALL NOT BE LOCATED DIRECTLY UNDER STRUCTURES AND NOT DIRECTLY UNDER OR OVER OTHER SUBSURFACE STRUCTURES. WHERE DUCT LINES ARE REQUIRED TO CROSS OTHER UTILITIES SUCH AS SEWERS, WATER LINES, OTHER POWER LINES, COMMUNICATION LINES, ETC., ADEQUATE SUPPORT SHALL BE PROVIDED ON EACH SIDE OF THE CROSSING TO PREVENT TRANSFERRING ANY DIRECT LOAD ONTO THE OTHER LINE. DUCT LINES SHALL BE SO INSTALLED AS TO PREVENT HEAT TRANSFER BETWEEN ANY HEAT PRODUCING LINES AND/OR EQUIPMENT TO DUCT LINES.
   a. ROUTING SHOWN ON DRAWINGS IS TYPICAL AND THE CONTRACTOR SHALL PROPOSE FINAL ROUTING BASED UPON ACTUAL FIELD DIMENSIONS, CONDITIONS AND EXISTING UNDERGROUND UTILITIES AND STRUCTURES.
   b. PRIOR TO TRENCHING, THE CONTRACTOR SHALL STAKE OUT THE ENTIRE NETWORK ARRANGEMENT, ONE GRADE A WOODEN STAKE WITH RED FLAG SHALL BE DRIVEN EVERY 50'-0" AND AT EACH CHANGE OF DIRECTION. FOUR STAKES SHALL BE DRIVEN TO OUTLINE EQUIPMENT AND/OR MANHOLE LOCATIONS. ON PAVEMENTS RED PAINT SHALL BE USED TO OUTLINE THE AREAS TO BE CUT. SECURE EXISTING UNDERGROUND UTILITY INFORMATION FROM THE CONTRACTING OFFICER PRIOR TO PERFORMING ANY TRENCHING.
   c. DEPTHS INDICATED FOR INSTALLATION ARE MINIMUM. ACTUAL DEPTHS MAY VARY DUE TO TERMINATIONS, COMPENSATIONS FOR RADIUS OF VERTICAL TRANSITIONS, EXISTING UTILITY CROSSINGS, ETC. APPROVAL SHALL BE OBTAINED FOR ANY DEPTH LESS THAN INDICATED. TRENCHES SHALL BE OVER-EXCAVATED AS NECESSARY TO ALLOW FOR PROPER TRENCH PREPARATION, DUCT BANK CONSTRUCTION, FORMING AND/OR BACKFILLING REQUIREMENTS.
   d. ALL TRENCHING AND BACKFILL COMPACTION SHALL COMPLY WITH GEOTECHNICAL REPORT AND DIVISION 200.

SITE LEGEND

--OHP--- --OVERHEAD ELECTRICAL BY UTILITY	Tx PAD MOUNTED TRANSFORMER
--OHS--- --OVERHEAD SECONDARY	T POLE MOUNTED TRANSFORMER
——UP—— UNDERGROUND PRIMARY	● UTILITY POLE
——US—— UNDERGROUND SECONDARY	▷● UTILITY POLE WITH UTILITY FLOOD LIGHT
——UC—— UNDERGROUND COMMUNICATION	HH UNDERGROUND PULLBOX: HIGHLINE NO. PHA243624HM2-M00. PROVIDE WITH COVER LABELED "COMMUNICATION"
- - -OC- - - OVERHEAD COMMUNICATION	
——UG—— UNDERGROUND BRANCH CIRCUITING	
——OH—— OVERHEAD BRANCH CIRCUITING	

GENERAL NOTES:

1. LOCATIONS OF RISER POLES, AND TRANSFORMERS SHALL BE COORDINATED PRIOR TO BIDS. ADJUST FEEDER AND CONDUIT LENGTHS ACCORDINGLY. PAY ALL UTILITY COMPANY FEES. BID ACCORDINGLY.
2. ALL UNDERGROUND CONDUITS SHALL BE 36" MINIMUM BELOW GRADE. PRIMARY CONDUIT SHALL BE MINIMUM 48" BELOW GRADE.
3. ALL ROUTING IS SHOWN DIAGRAMMATIC. VERIFY ACTUAL ROUTING AND FIELD CONDITIONS PRIOR TO BIDS.
4. CONTRACTOR SHALL LABEL ALL CONDUITS ENTERING BACKBOARDS.

SHEET NOTES:

1. REMOVE ALL LIGHTING, POWER, AND AUXILIARY IN PHASE 1 AREA. PHASE 2 AREA IS TO BE MAINTAINED AND IN OPERATION DURING CONSTRUCTION OF PHASE 1.
2. UPON COMPLETION OF PHASE 1 AREA WORK, REMOVE ALL LIGHTING, POWER, AND AUXILIARY IN PHASE 2 AREA.
3. COORDINATE WITH UTILITY COMPANY FOR SPECIFIC LOCATION AND REQUIREMENTS OF POLE MOUNTED TRANSFORMER. SEE POWER RISER DIAGRAM SHEET E7.1 FOR FURTHER REQUIREMENTS.
4. PROVIDE SECONDARY CONDUCTORS AS INDICATED ON RISER DIAGRAM SHEET E7.1.
5. PROVIDE CONDUIT BELOW GRADE FROM NEW IDF TO EXISTING MDF IN LIBRARY. VERIFY ROUTE PRIOR TO BID. SEE E4.1 FOR ADDITIONAL INFORMATION.
6. EXTEND TWO (2) – 2" EC FROM BELOW GRADE IN CORNER OF IDF ROOM TO CORNER OF ELEC ROOM FOR FUTURE. INCLUDE PULL STRING IN EACH CONDUIT
7. PROVIDE WEATHERPROOF DEVICES FOR MONITORING OF FIRE PROTECTION EQUIPMENT. ALL CIRCUITS INTO BUILDING SHALL HAVE SURGE PROTECTION. VERIFY LOCATION.
8. EXTEND 3" CONDUIT FROM IN-GRADE BOX TO EXISTING GYM. EXTEND CONDUIT UP WALL AND THROUGH WALL TO ABOVE ACCESSIBLE CEILING. INCLUDE PULL STRING IN CONDUIT.

1" = 20'-0

20' 0 20' 40'

GRAPHIC SCALE

Gunn & Associates, P.C.
Consulting Engineers
3102 Highway 14
Millbrook, AL 36054
Tel: 334.285.1273
1200 Providence Park, Suite 200
Birmingham, AL 35242
GA#22-065

CLASSROOM ADDITION

FOR

UNION HILL SCHOOL

SOMERVILLE, ALABAMA

FOR THE

MORGAN COUNTY BOARD OF EDUCATION

McKEE and ASSOCIATES
ARCHITECTURE and INTERIOR DESIGN
631 SOUTH HULL STREET MONTGOMERY, ALABAMA 36104 (334) 834-9933

LICENSED PROFESSIONAL ENGINEER
No. 37959
10-13-2022
CHARLES M. BREWER

SHEET TITLE :	SITE PLAN- ELECTRICAL DEMOLITION & NEW WORK
MCKEE JOB # :	22-134
DRAWN BY :	CMB
DATE:	10.13.2022
REVISED DATE:	
REVISED DATE:	
REVISED DATE:	

SHEET NO. : E1.1

DIMENSION BLOCK		
REF	SI	ENGLISH
A	305mm	1'-0"
B	152mm	0'-6"
C	51mm	0'-2"
D	203mm	0'-8"
E	76mm	0'-3"

NOTES:

1. TRENCH/CUT EXISTING SURFACES. BACKFILL/PATCH/REPAIR ALL SURFACES AS SHOWN.
2. TRENCH DEPTH AND WIDTH SHALL BE AS REQUIRED FOR THE INSTALLATION OF THE RACEWAY LINE SPECIFIED. SEE APPLICABLE RACEWAY LINE SECTION.
3. PAVEMENT REMOVAL SHALL BE COMPLETE FROM THE SITE AND EXTEND BEYOND THE TRENCH WIDTH AS INDICATED.
4. CONCRETE SHALL BE CLASS A.
5. MATCH THICKNESS OF EXISTING CONCRETE PAVEMENT 8" (20.32cm) MIN.
6. LEAVE DRILLED FACE OF EXISTING PAVEMENT IRREGULAR TO INSURE KEY TO NEW CONCRETE PAVEMENT.
7. ALL EXISTING JOINTS TO BE RE-ESTABLISHED.
8. REINFORCING BARS SHALL MEET ASTM A615, A616 OR A617, GRADE 40. REINFORCING BARS SHALL BE INSTALLED THE CONTINUOUS LENGTH OF CONCRETE PAVEMENT.
9. PLASTIC MARKER TAPE SHALL BE RED AND CONTAIN FOIL BACKING OR EQUIVALENT TO ENABLE DETECTION BY A METAL DETECTOR. SEE SPECIFICATIONS.

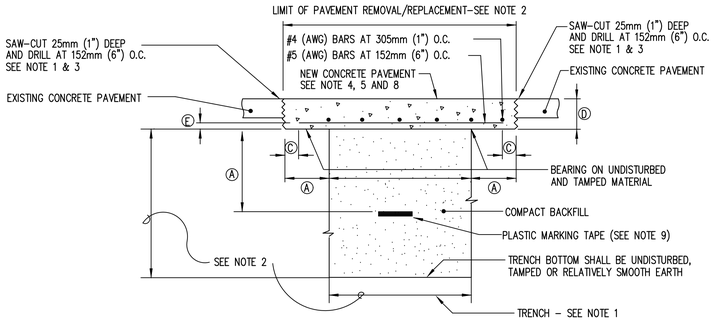

1 E1.2 SECTION - TYPICAL TRENCH/BACKFILL/REPAIR RIGID PAVEMENT
NO SCALE

NOTES:

1. TRENCH/CUT EXISTING SURFACES. BACKFILL/PATCH/REPAIR AND INSTALL NEW SOD.
2. TRENCH DEPTH AND WIDTH SHALL BE AS REQUIRED FOR THE INSTALLATION OF THE RACEWAY LINE SPECIFIED. SEE APPLICABLE RACEWAY LINE SECTION.
3. PLASTIC MARKER TAPE SHALL BE RED AND CONTAIN FOIL BACKING OR EQUIVALENT TO ENABLE DETECTION BY A METAL DETECTOR. SEE SPECIFICATIONS.

DIMENSION BLOCK		
REF	SI	ENGLISH
A	305mm	1'-0"
B	51mm	0'-2"

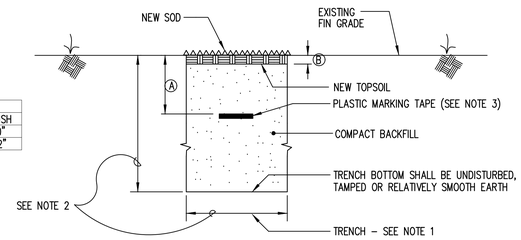

2 E1.2 SECTION - TYPICAL TRENCH/BACKFILL/REPAIR SODDED AREAS
NO SCALE

DIMENSION BLOCK		
REF	SI	ENGLISH
A	305mm	1'-0"
B	152mm	0'-6"
C	51mm	0'-2"
D	203mm	0'-8"
E	76mm	0'-3"

NOTES:

1. TRENCH/CUT EXISTING SURFACES. BACKFILL/PATCH/REPAIR ALL SURFACES AS SHOWN.
2. TRENCH DEPTH AND WIDTH SHALL BE AS REQUIRED FOR THE INSTALLATION OF THE RACEWAY LINE SPECIFIED. SEE APPLICABLE RACEWAY LINE SECTION.
3. PAVEMENT REMOVAL SHALL BE COMPLETE FROM THE SITE AND EXTEND BEYOND THE TRENCH WIDTH AS INDICATED.
4. CONCRETE SHALL BE CLASS A.
5. MATCH THICKNESS OF EXISTING BITUMINOUS SURFACE, OR 38mm (1.5") MINIMUM, WHICHEVER IS GREATER.
6. REINFORCING BARS SHALL MEET ASTM A615, A616 OR A617, GRADE 40. REINFORCING BARS SHALL BE INSTALLED THE CONTINUOUS LENGTH OF CONCRETE SLAB.
7. PLASTIC MARKER TAPE SHALL BE RED AND CONTAIN FOIL BACKING OR EQUIVALENT TO ENABLE DETECTION BY A METAL DETECTOR. SEE SPECIFICATIONS.

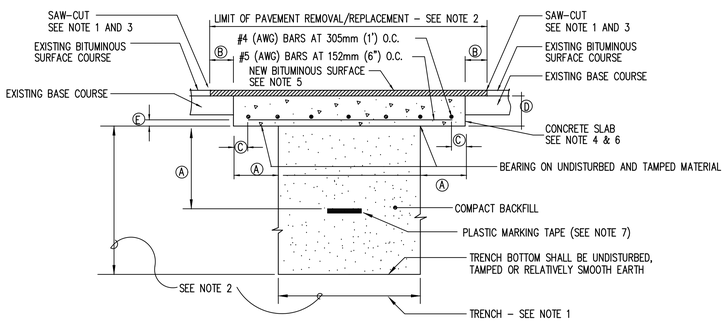

3 E1.2 SECTION - TYPICAL TRENCH/BACKFILL/REPAIR FLEXIBLE PAVEMENT
NO SCALE

1" = 20'-0

20' 0 20' 40'

GRAPHIC SCALE

Gunn & Associates, P.C.
Consulting Engineers
3102 Highway 14
Millbrook, AL 36054
Tel: 334.285.1273
1200 Providence Park, Suite 200
Birmingham, AL 35242
GA#22-065

CLASSROOM ADDITION
FOR
UNION HILL SCHOOL
SOMERVILLE, ALABAMA
FOR THE
MORGAN COUNTY BOARD OF EDUCATION

McKEE and ASSOCIATES
ARCHITECTURE and INTERIOR DESIGN
631 SOUTH HULL STREET MONTGOMERY, ALABAMA 36104 (334) 834-9933

Charles M. Brewer
LICENSED
No. 27559
PROFESSIONAL
10-13-2022
ENGINEER
CHARLES M. BREWER

SHEET TITLE : SITE PLAN-ELECTRICAL DETAILS

MCKEE JOB # : 22-134

DRAWN BY : CMB

DATE: 10.13.2022

REVISED DATE:

REVISED DATE:

REVISED DATE:

SHEET NO. : E1.2

ROOM CONTROLLER NOTES:

1. CONTRACTOR SHALL LOCATE ALL ROOM CONTROLLERS ABOVE DOORS IN EACH ROOM 6" ABOVE CEILING GRID. PROVIDE ACCESS PANELS WHERE LOCATED ABOVE HARD CEILINGS OR MOUNT IN UTILITY TYPE ROOMS WHENEVER POSSIBLE. ROOM CONTROLLER SHOWN ON THIS PLAN IS DIAGRAMMATIC FOR CIRCUITRY. DO NOT USE THESE FOR ACTUAL LOCATIONS. PROVIDE A WHITE PHENOLIC LABEL WITH 1" BLACK TEXT THAT READS 'RC' GLUED ON CEILING GRID UNDER POWER PACK FOR EACH LOCATION FOR FUTURE MAINTENANCE.

STORM SHELTER NOTES:

1. CONTRACTOR SHALL INSTALL ALL CONDUITS ENTERING OR EXITING THE STORM SHELTER UNDERGROUND SUCH THAT THEY DO NOT PENETRATE THE STORM SHELTER WALLS OR CEILING. IF A PENETRATION IS REQUIRED, THEN THERE SHALL BE NO PENETRATION GREATER THAN 2". ANY PENETRATIONS SHALL CONFORM TO ICC 500.

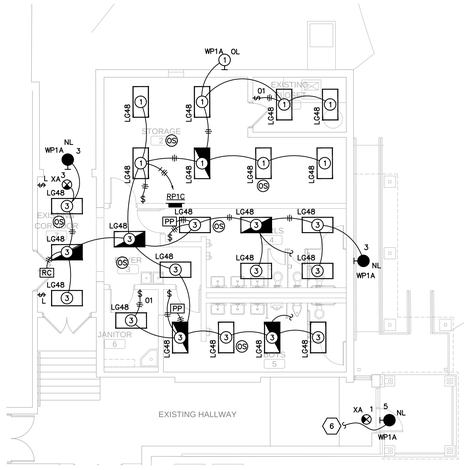

PROJECT NORTH

RESTROOM FLOOR PLAN- LIGHTING

SCALE: 1/8"=1'-0"

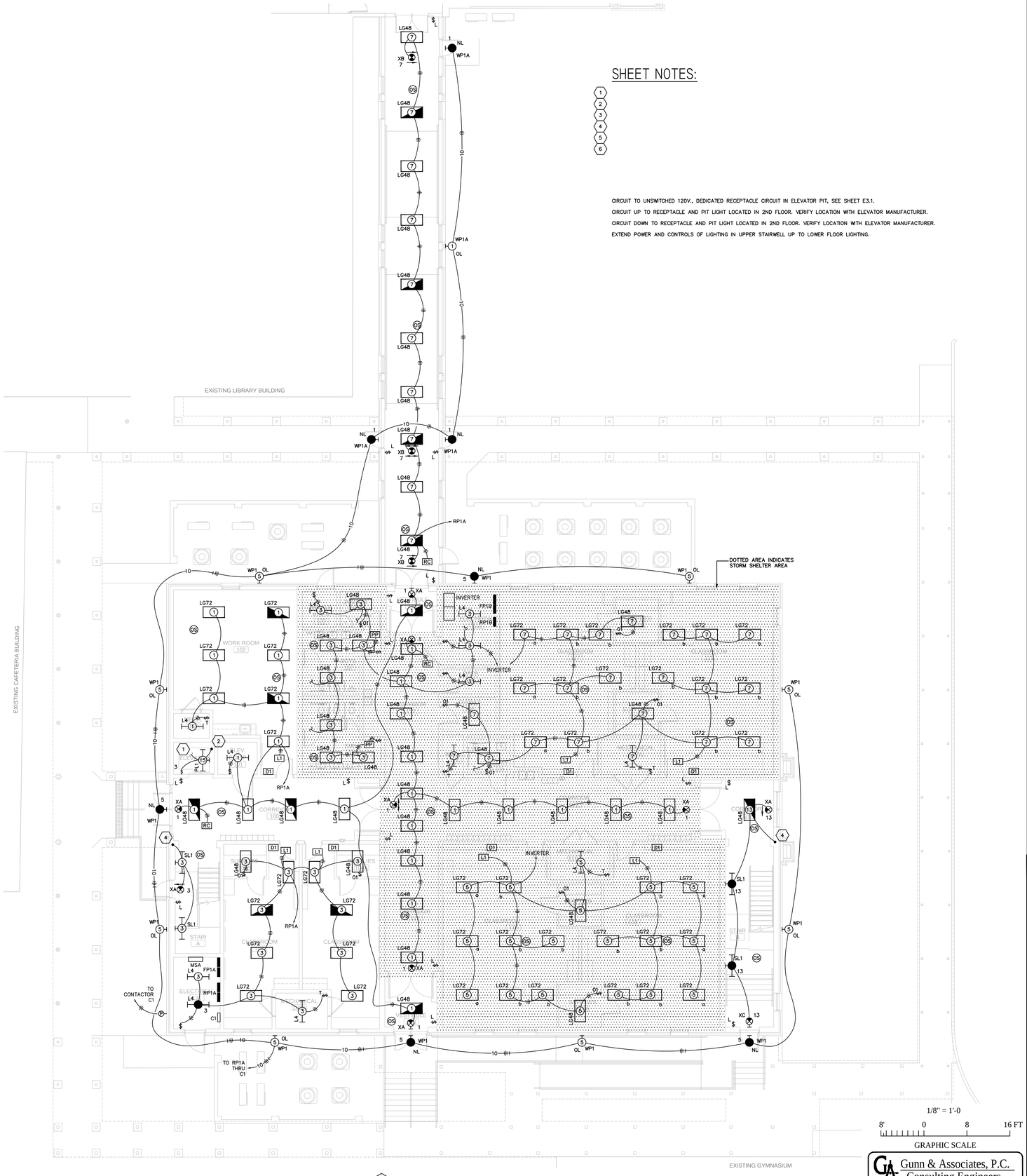

PROJECT NORTH

FIRST FLOOR PLAN- LIGHTING

SCALE: 1/8"=1'-0"

SHEET NOTES:

1
2
3
4
5
6

CIRCUIT TO UNSWITCHED 120V., DEDICATED RECEPTACLE CIRCUIT IN ELEVATOR PIT, SEE SHEET E3.1.

CIRCUIT UP TO RECEPTACLE AND PIT LIGHT LOCATED IN 2ND FLOOR. VERIFY LOCATION WITH ELEVATOR MANUFACTURER.

CIRCUIT DOWN TO RECEPTACLE AND PIT LIGHT LOCATED IN 2ND FLOOR. VERIFY LOCATION WITH ELEVATOR MANUFACTURER.

EXTEND POWER AND CONTROLS OF LIGHTING IN UPPER STAIRWELL UP TO LOWER FLOOR LIGHTING.

1/8" = 1'-0

8' 0 8 16 FT

GRAPHIC SCALE

Gunn & Associates, P.C.
Consulting Engineers
3102 Highway 14
Millbrook, AL 36054
Tel: 334.285.1273
1200 Providence Park, Suite 200
Birmingham, AL 35242
GA#22-065

CLASSROOM ADDITION

FOR

UNION HILL SCHOOL

SOMERVILLE, ALABAMA

FOR THE

MORGAN COUNTY BOARD OF EDUCATION

McKEE and ASSOCIATES
ARCHITECTURE and INTERIOR DESIGN
631 SOUTH HULL STREET MONTGOMERY , ALABAMA 36104 (334) 834-9933

Charles M. Brewer
LICENSED
No. 37959
PROFESSIONAL
10-13-2022
ENGINEER
CHARLES M. BREWER

SHEET TITLE :	FIRST FLOOR PLAN - LIGHTING
MCKEE JOB # :	22-134
DRAWN BY :	CMB
DATE:	10.13.2022
REVISED DATE:	
REVISED DATE:	
REVISED DATE:	

SHEET NO. : E2.1

ROOM CONTROLLER NOTES:

1. CONTRACTOR SHALL LOCATE ALL ROOM CONTROLLERS ABOVE DOORS IN EACH ROOM 6" ABOVE CEILING GRID. PROVIDE ACCESS PANELS WHERE LOCATED ABOVE HARD CEILINGS OR MOUNT IN UTILITY TYPE ROOMS WHENEVER POSSIBLE. ROOM CONTROLLER SHOWN ON THIS PLAN IS DIAGRAMMATIC FOR CIRCUITRY. DO NOT USE THESE FOR ACTUAL LOCATIONS. PROVIDE A WHITE PHENOLIC LABEL WITH 1" BLACK TEXT THAT READS 'RC' GLUED ON CEILING GRID UNDER POWER PACK FOR EACH LOCATION FOR FUTURE MAINTENANCE.

STORM SHELTER NOTES:

1. CONTRACTOR SHALL INSTALL ALL CONDUITS ENTERING OR EXITING THE STORM SHELTER UNDERGROUND SUCH THAT THEY DO NOT PENETRATE THE STORM SHELTER WALLS OR CEILING. IF A PENETRATION IS REQUIRED, THEN THERE SHALL BE NO PENETRATION GREATER THAN 2". ANY PENETRATIONS SHALL CONFORM TO ICC 500.

SHEET NOTES:

1. CIRCUIT TO UNSWITCHED 120V., DEDICATED RECEPTACLE CIRCUIT IN ELEVATOR PIT, SEE SHEET E3.1.
2. CIRCUIT UP TO RECEPTACLE AND PIT LIGHT LOCATED IN 2ND FLOOR. VERIFY LOCATION WITH ELEVATOR MANUFACTURER.
3. CIRCUIT DOWN TO RECEPTACLE AND PIT LIGHT LOCATED IN 2ND FLOOR. VERIFY LOCATION WITH ELEVATOR MANUFACTURER.
4. EXTEND POWER AND CONTROLS OF LIGHTING IN UPPER STAIRWELL UP TO LOWER FLOOR LIGHTING.

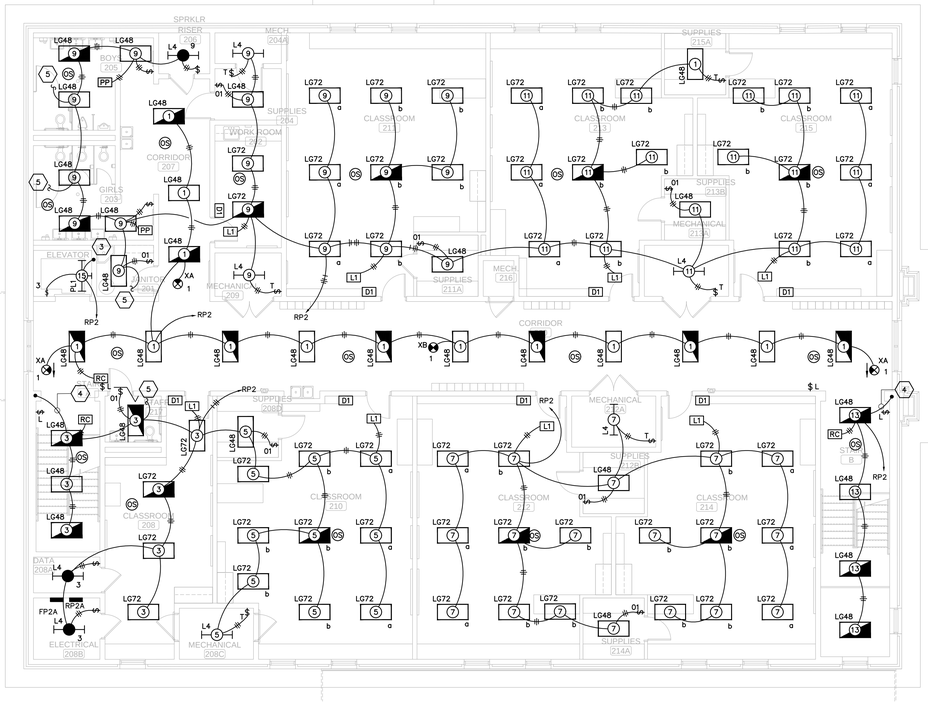

PROJECT NORTH

SECOND FLOOR PLAN- LIGHTING

SCALE: 1/8"=1'-0"

1/8" = 1'-0

8' 0 8 16 FT

GRAPHIC SCALE

Gunn & Associates, P.C.
Consulting Engineers
3102 Highway 14
Millbrook, AL 36054
Tel: 334.285.1273
1200 Providence Park, Suite 200
Birmingham, AL 35242
GA#22-065

CLASSROOM ADDITION

FOR

UNION HILL SCHOOL

SOMERVILLE, ALABAMA

FOR THE

MORGAN COUNTY BOARD OF EDUCATION

McKEE and ASSOCIATES
ARCHITECTURE and INTERIOR DESIGN
631 SOUTH HULL STREET MONTGOMERY, ALABAMA 36104 (334) 834-9933

Charles M. Brewer
No. 37959
PROFESSIONAL
10-13-2022
ENGINEER
CHARLES M. BREWER

SHEET TITLE : SECOND FLOOR PLAN - LIGHTING

MCKEE JOB # : 22-134

DRAWN BY : CMB

DATE: 10.13.2022

REVISED DATE:

REVISED DATE:

REVISED DATE:

SHEET NO. : E2.2

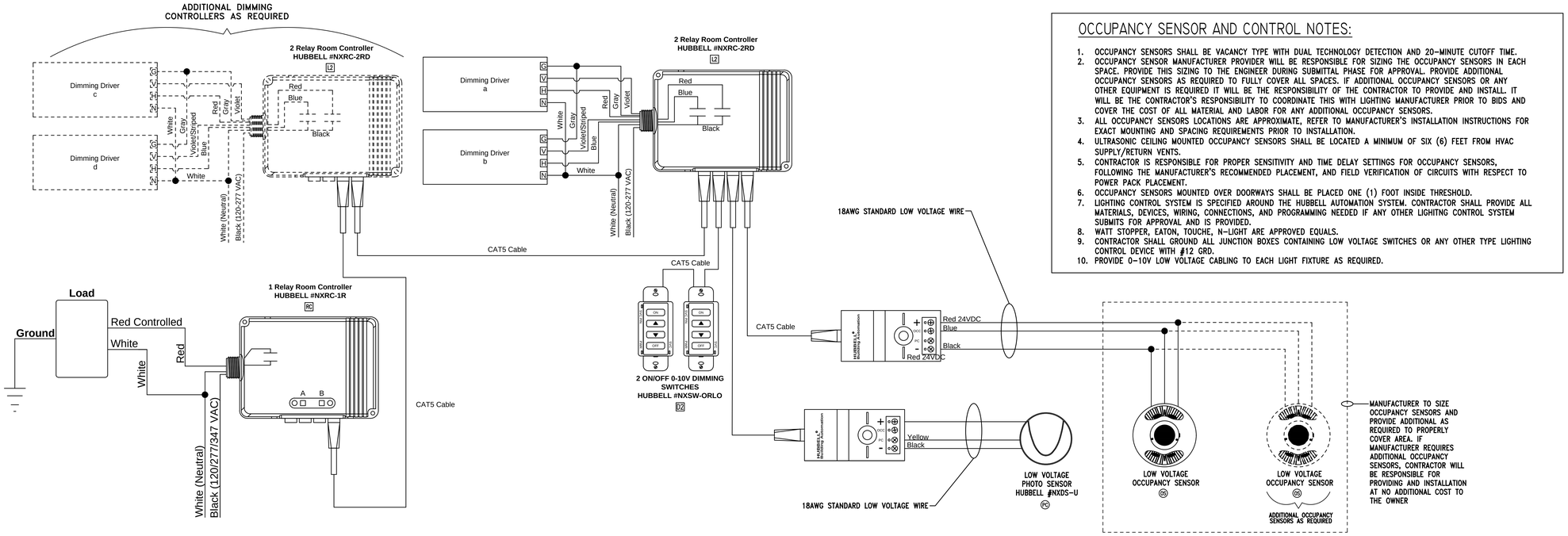

OCCUPANCY SENSOR AND CONTROL NOTES:

1. OCCUPANCY SENSORS SHALL BE VACANCY TYPE WITH DUAL TECHNOLOGY DETECTION AND 20-MINUTE CUTOFF TIME.
2. OCCUPANCY SENSOR MANUFACTURER PROVIDER WILL BE RESPONSIBLE FOR SIZING THE OCCUPANCY SENSORS IN EACH SPACE. PROVIDE THIS SIZING TO THE ENGINEER DURING SUBMITTAL PHASE FOR APPROVAL. PROVIDE ADDITIONAL OCCUPANCY SENSORS AS REQUIRED TO FULLY COVER ALL SPACES. IF ADDITIONAL OCCUPANCY SENSORS OR ANY OTHER EQUIPMENT IS REQUIRED IT WILL BE THE RESPONSIBILITY OF THE CONTRACTOR TO PROVIDE AND INSTALL. IT WILL BE THE CONTRACTOR'S RESPONSIBILITY TO COORDINATE THIS WITH LIGHTING MANUFACTURER PRIOR TO BIDS AND COVER THE COST OF ALL MATERIAL AND LABOR FOR ANY ADDITIONAL OCCUPANCY SENSORS.
3. ALL OCCUPANCY SENSORS LOCATIONS ARE APPROXIMATE, REFER TO MANUFACTURER'S INSTALLATION INSTRUCTIONS FOR EXACT MOUNTING AND SPACING REQUIREMENTS PRIOR TO INSTALLATION.
4. ULTRASONIC CEILING MOUNTED OCCUPANCY SENSORS SHALL BE LOCATED A MINIMUM OF SIX (6) FEET FROM HVAC SUPPLY/RETURN VENTS.
5. CONTRACTOR IS RESPONSIBLE FOR PROPER SENSITIVITY AND TIME DELAY SETTINGS FOR OCCUPANCY SENSORS, FOLLOWING THE MANUFACTURER'S RECOMMENDED PLACEMENT, AND FIELD VERIFICATION OF CIRCUITS WITH RESPECT TO POWER PACK PLACEMENT.
6. OCCUPANCY SENSORS MOUNTED OVER DOORWAYS SHALL BE PLACED ONE (1) FOOT INSIDE THRESHOLD.
7. LIGHTING CONTROL SYSTEM IS SPECIFIED AROUND THE HUBBELL AUTOMATION SYSTEM. CONTRACTOR SHALL PROVIDE ALL MATERIALS, DEVICES, WIRING, CONNECTIONS, AND PROGRAMMING NEEDED IF ANY OTHER LIGHITNG CONTROL SYSTEM SUBMITS FOR APPROVAL AND IS PROVIDED.
8. WATT STOPPER, EATON, TOUCHE, N-LIGHT ARE APPROVED EQUALS.
9. CONTRACTOR SHALL GROUND ALL JUNCTION BOXES CONTAINING LOW VOLTAGE SWITCHES OR ANY OTHER TYPE LIGHTING CONTROL DEVICE WITH #12 GRD.
10. PROVIDE 0-10V LOW VOLTAGE CABLING TO EACH LIGHT FIXTURE AS REQUIRED.

1 E2.3 TYPICAL MULTIPLE OCCUPANCY SENSOR, PHOTOCELL, MULTIPLE 0-10V DIMMING ZONES DETAIL
NO SCALE

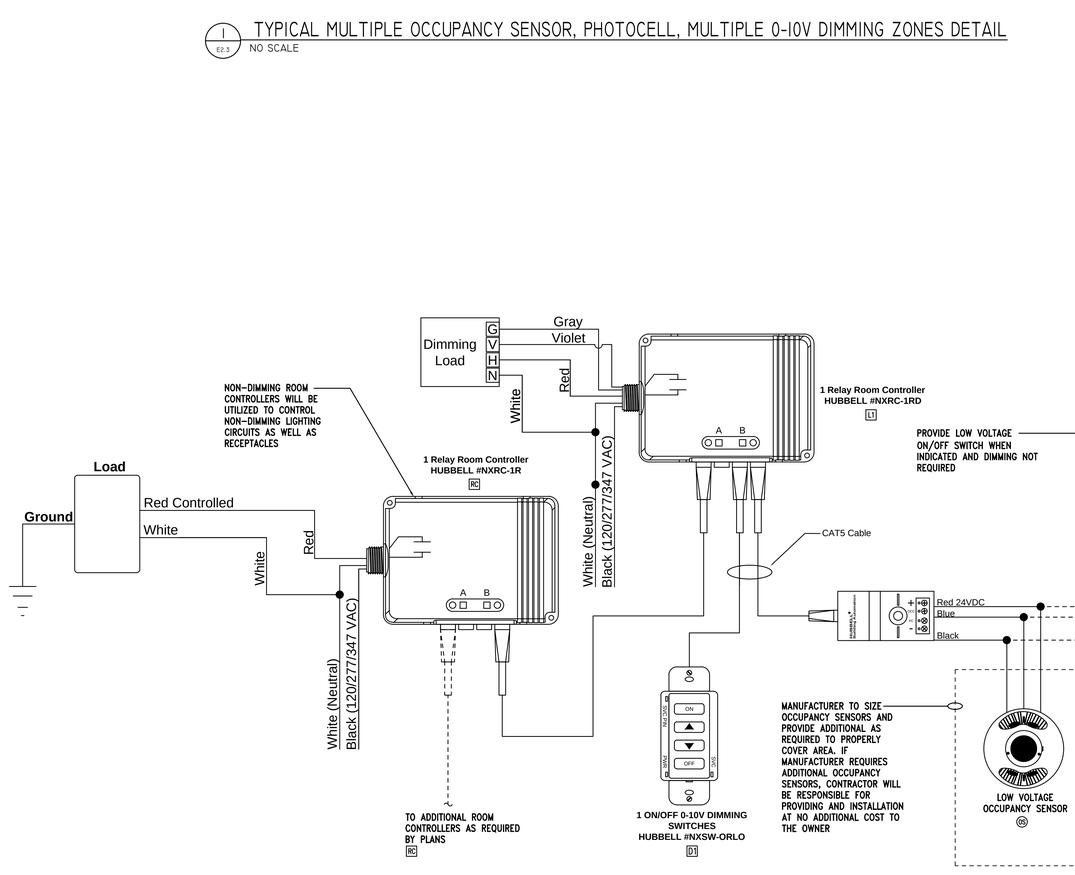

2 E2.3 TYPICAL MULTIPLE OCCUPANCY SENSOR, SINGLE 0-10V DIMMING SYSTEM DETAIL
NO SCALE

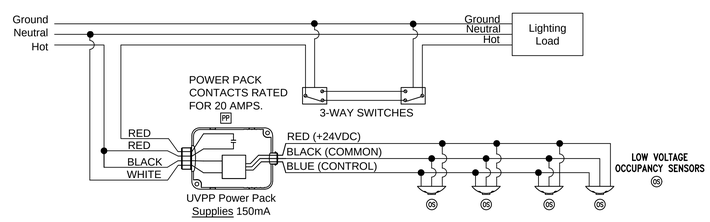

3 E2.3 TYPICAL 3-WAY SWITCHING OCCUPANCY SENSOR WIRING DIAGRAM
NO SCALE

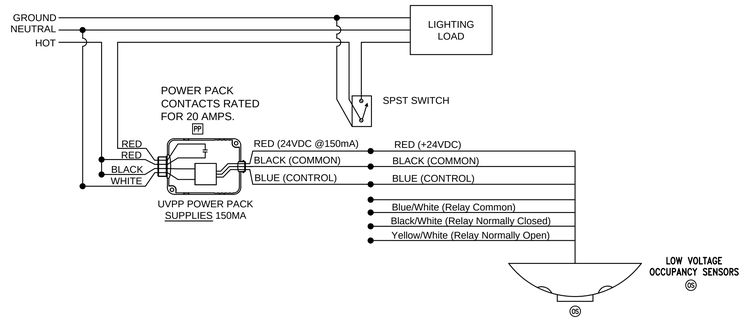

4 E2.3 TYPICAL SINGLE SWITCH OCCUPANCY SENSOR WIRING DIAGRAM
NO SCALE

CLASSROOM ADDITION
FOR
UNION HILL SCHOOL
SOMERVILLE, ALABAMA
FOR THE
MORGAN COUNTY BOARD OF EDUCATION

McKEE and ASSOCIATES
ARCHITECTURE and INTERIOR DESIGN
631 SOUTH HULL STREET MONTGOMERY, ALABAMA 36104 (334) 834-9933

Charles M. Brewer No. 37059 LICENSED PROFESSIONAL ENGINEER 10-13-2022 CHARLES M. BREWER

SHEET TITLE :	LIGHTING CONTROLS
MCKEE JOB # :	22-134
DRAWN BY :	CMB
DATE:	10.13.2022
REVISED DATE:	
REVISED DATE:	
REVISED DATE:	

Gunn & Associates, P.C.
Consulting Engineers
3102 Highway 14, Millbrook, AL 36054, Tel: 334.285.1273
1200 Providence Park, Suite 200, Birmingham, AL 35242
GA#22-065

SHEET NO. : E2.3

ROOM CONTROLLER NOTES:

1. CONTRACTOR SHALL LOCATE ALL ROOM CONTROLLERS ABOVE DOORS IN EACH ROOM 6" ABOVE CEILING GRID. PROVIDE ACCESS PANELS WHERE LOCATED ABOVE HARD CEILINGS OR MOUNT IN UTILITY TYPE ROOMS WHENEVER POSSIBLE. ROOM CONTROLLER SHOWN ON THIS PLAN IS DIAGRAMMATIC FOR CIRCUITRY. DO NOT USE THESE FOR ACTUAL LOCATIONS. PROVIDE A WHITE PHENOLIC LABEL WITH 1" BLACK TEXT THAT READS 'RC' GLUED ON CEILING GRID UNDER POWER PACK FOR EACH LOCATION FOR FUTURE MAINTENANCE.

STORM SHELTER NOTES:

1. CONTRACTOR SHALL INSTALL ALL CONDUITS ENTERING OR EXITING THE STORM SHELTER UNDERGROUND SUCH THAT THEY DO NOT PENETRATE THE STORM SHELTER WALLS OR CEILING. IF A PENETRATION IS REQUIRED, THEN THERE SHALL BE NO PENETRATION GREATER THAN 2". ANY PENETRATIONS SHALL CONFORM TO ICC 500.

SHEET NOTES:

1. PROVISIONS FOR ELECTRIC HAND DRYER. MOUNT JUNCTION BOX BEHIND PAPER TOWEL DISPENSER AND WALL BLANK OFF. CIRCUIT BREAKERS FEEDING CIRCUITRY SHALL BE SWITCHED OFF AND WIRE DISCONNECTED.
2. SEE DETAILS SHEET E8.2 FOR ELEVATIONS OF RECEPTACLES.

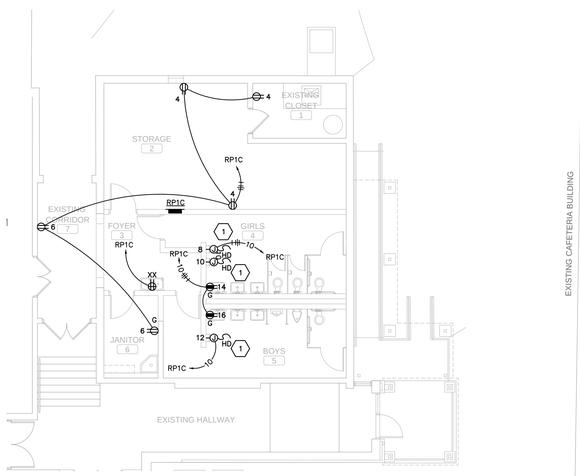

PROJECT NORTH

RESTROOM FLOOR PLAN- POWER

SCALE: 1/8"=1'-0"

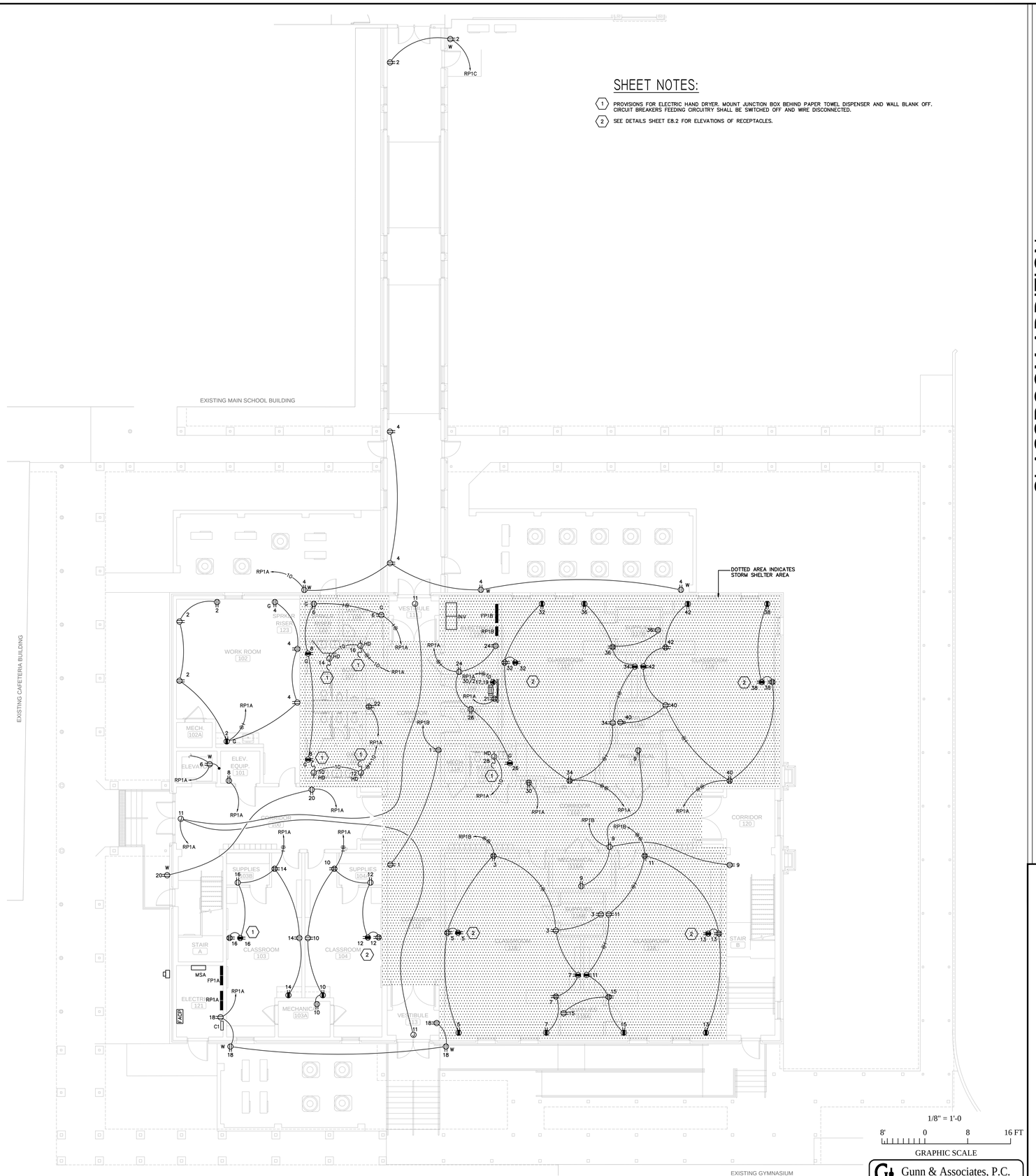

PROJECT NORTH

FIRST FLOOR PLAN- POWER

SCALE: 1/8"=1'-0"

1/8" = 1'-0

8' 0 8 16 FT

GRAPHIC SCALE

Gunn & Associates, P.C.
Consulting Engineers
3102 Highway 14
Millbrook, AL 36054
Tel: 334.285.1273
1200 Providence Park, Suite 200
Birmingham, AL 35242
GA#22-065

CLASSROOM ADDITION

FOR

UNION HILL SCHOOL

SOMERVILLE, ALABAMA

FOR THE

MORGAN COUNTY BOARD OF EDUCATION

McKEE and ASSOCIATES
ARCHITECTURE and INTERIOR DESIGN
631 SOUTH HULL STREET MONTGOMERY , ALABAMA 36104 (334) 834-9933

CHARLES M. BREWER
No. 37959
PROFESSIONAL
10-13-2022
ENGINEER
CHARLES M. BREWER

SHEET TITLE :	FIRST FLOOR PLAN - POWER
MCKEE JOB # :	22-134
DRAWN BY :	CMB
DATE:	10.13.2022
REVISED DATE:	
REVISED DATE:	
REVISED DATE:	

SHEET NO. : E3.1

ROOM CONTROLLER NOTES:

1. CONTRACTOR SHALL LOCATE ALL ROOM CONTROLLERS ABOVE DOORS IN EACH ROOM 6" ABOVE CEILING GRID. PROVIDE ACCESS PANELS WHERE LOCATED ABOVE HARD CEILINGS OR MOUNT IN UTILITY TYPE ROOMS WHENEVER POSSIBLE. ROOM CONTROLLER SHOWN ON THIS PLAN IS DIAGRAMMATIC FOR CIRCUITRY. DO NOT USE THESE FOR ACTUAL LOCATIONS. PROVIDE A WHITE PHENOLIC LABEL WITH 1" BLACK TEXT THAT READS 'RC' GLUED ON CEILING GRID UNDER POWER PACK FOR EACH LOCATION FOR FUTURE MAINTENANCE.

STORM SHELTER NOTES:

1. CONTRACTOR SHALL INSTALL ALL CONDUITS ENTERING OR EXITING THE STORM SHELTER UNDERGROUND SUCH THAT THEY DO NOT PENETRATE THE STORM SHELTER WALLS OR CEILING. IF A PENETRATION IS REQUIRED, THEN THERE SHALL BE NO PENETRATION GREATER THAN 2". ANY PENETRATIONS SHALL CONFORM TO ICC 500.

SHEET NOTES:

1. PROVISIONS FOR ELECTRIC HAND DRYER. MOUNT JUNCTION BOX BEHIND PAPER TOWEL DISPENSER AND WALL BLANK OFF. CIRCUIT BREAKERS FEEDING CIRCUITRY SHALL BE SWITCHED OFF AND WIRE DISCONNECTED.
2. SEE DETAILS SHEET E8.2 FOR ELEVATIONS OF RECEPTACLES.

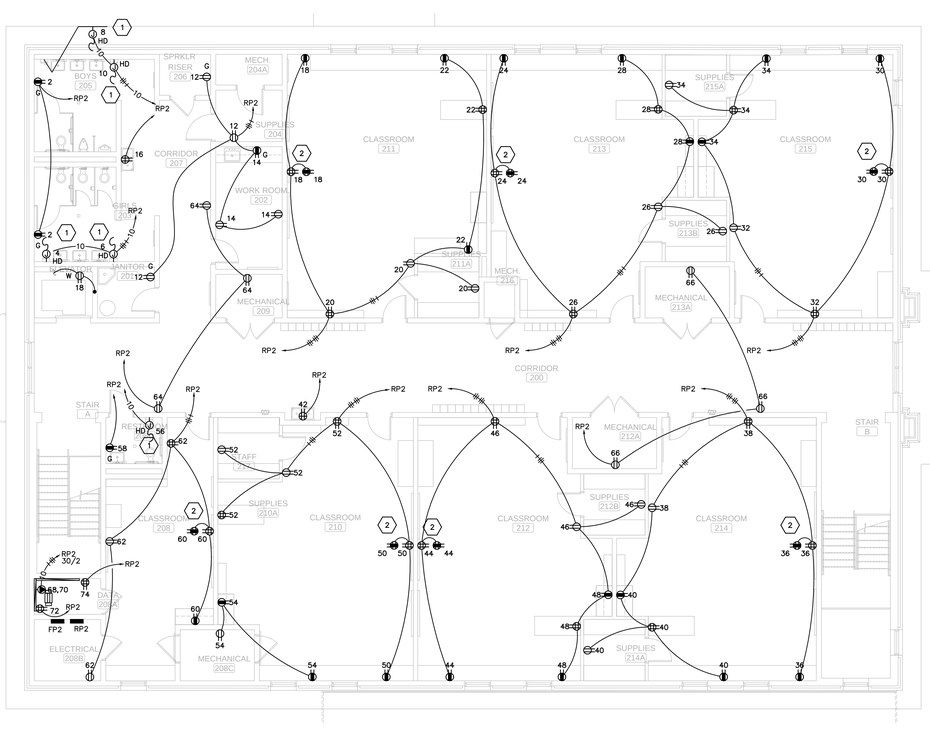

PROJECT NORTH

SECOND FLOOR PLAN- POWER

SCALE: 1/8"=1'-0"

1/8" = 1'-0

8' 0 8 16 FT

GRAPHIC SCALE

Gunn & Associates, P.C.
Consulting Engineers
3102 Highway 14
Millbrook, AL 36054
Tel: 334.285.1273
1200 Providence Park, Suite 200
Birmingham, AL 35242
GA#22-065

CLASSROOM ADDITION

FOR

UNION HILL SCHOOL

SOMERVILLE, ALABAMA

FOR THE

MORGAN COUNTY BOARD OF EDUCATION

McKEE and ASSOCIATES
ARCHITECTURE and INTERIOR DESIGN
631 SOUTH HULL STREET MONTGOMERY, ALABAMA 36104 (334) 834-9933

Charles M. Brewer
LICENSED
No. 31799
PROFESSIONAL
10-13-2022
ENGINEER
CHARLES M. BREWER

SHEET TITLE : SECOND FLOOR PLAN - POWER

MCKEE JOB # : 22-134

DRAWN BY : CMB

DATE: 10.13.2022

REVISED DATE:

REVISED DATE:

REVISED DATE:

SHEET NO. : E3.2

ROOM CONTROLLER NOTES:

1. CONTRACTOR SHALL LOCATE ALL ROOM CONTROLLERS ABOVE DOORS IN EACH ROOM 6" ABOVE CEILING GRID. PROVIDE ACCESS PANELS WHERE LOCATED ABOVE HARD CEILINGS OR MOUNT IN UTILITY TYPE ROOMS WHENEVER POSSIBLE. ROOM CONTROLLER SHOWN ON THIS PLAN IS DIAGRAMMATIC FOR CIRCUITRY. DO NOT USE THESE FOR ACTUAL LOCATIONS. PROVIDE A WHITE PHENOLIC LABEL WITH 1" BLACK TEXT THAT READS "RC" GLUED ON CEILING GRID UNDER POWER PACK FOR EACH LOCATION FOR FUTURE MAINTENANCE.

STORM SHELTER NOTES:

1. CONTRACTOR SHALL INSTALL ALL CONDUITS ENTERING OR EXITING THE STORM SHELTER UNDERGROUND SUCH THAT THEY DO NOT PENETRATE THE STORM SHELTER WALLS OR CEILING. IF A PENETRATION IS REQUIRED, THEN THERE SHALL BE NO PENETRATION GREATER THAN 2". ANY PENETRATIONS SHALL CONFORM TO ICC 500.

SHEET NOTES:

1. CIRCUIT EXHAUST FAN TO SWITCHED LIGHTING CIRCUIT IN SAME ROOM.
2. EXTERIOR UNIT PROVIDES POWER TO INDOOR UNIT. PROVIDE CIRCUITS AS REQUIRED.
3. PROVIDE MUSHROOM STYLE PUSHBUTTON (PUSH ON,/TURN OFF) FOR CONTROL OF SAF-1 FAN. COORDINATE CONTROLS WITH MECHANICAL CONTRACTOR PRIOR TO ROUGH-IN. SCHNEIDER #XB4BS8445 OR APPROVED EQUAL.
4. CIRCUIT EXHAUST FAN TO UNSWITCHED LIGHTING CIRCUIT IN SAME ROOM. FAN CONTROLLED BY TSTAT.
5. COORDINATE WITH ELEVATOR PROVIDER AND LOCATE DISCONNECT AT LOCATION TO MEET NEC CLEARANCES. CONTRACTOR SHALL COORDINATE REQUIRED OVERCURRENT PROTECTION WITH ELEVATOR CONTRACTOR PRIOR TO RELEASING ANY POWER EQUIPMENT AND ADJUST OVERCURRENT PROTECTION SIZE AS REQUIRED.

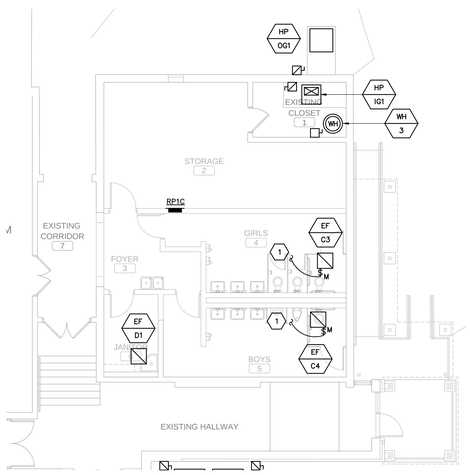

PROJECT NORTH

RESTROOM FLOOR PLAN- EQUIPMENT POWER

SCALE: 1/8"=1'-0"

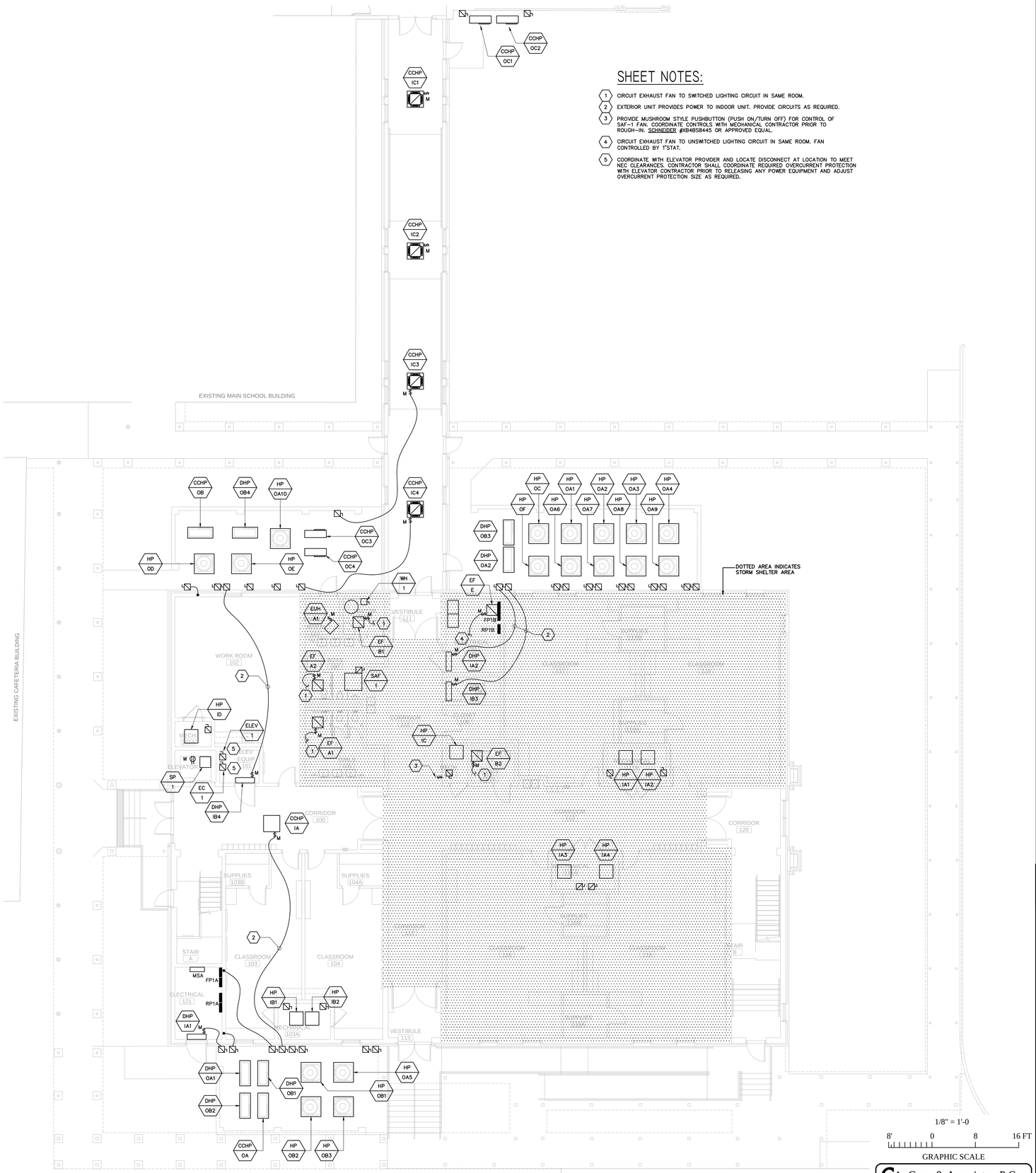

PROJECT NORTH

FIRST FLOOR PLAN- EQUIPMENT POWER

SCALE: 1/8"=1'-0"

1/8" = 1'-0

8' 0 8 16 FT

GRAPHIC SCALE

Gunn & Associates, P.C.
Consulting Engineers
3102 Highway 14
Millbrook, AL 36054
Tel: 334.285.1273
1200 Providence Park, Suite 200
Birmingham, AL 35242
GA#22-065

CLASSROOM ADDITION

FOR

UNION HILL SCHOOL

SOMERVILLE, ALABAMA

FOR THE

MORGAN COUNTY BOARD OF EDUCATION

McKEE and ASSOCIATES
ARCHITECTURE and INTERIOR DESIGN
631 SOUTH HULL STREET MONTGOMERY, ALABAMA 36104 (334) 834-9933

LICENSED Charles M. Brewer No. 37551 PROFESSIONAL ENGINEER 10-13-2022 CHARLES M. BREWER

SHEET TITLE : FLOOR PLAN ELEMENTARY SCHOOL EQUIPMENT POWER

MCKEE JOB # : 22-134

DRAWN BY : CMB

DATE: 10.13.2022

REVISED DATE:

REVISED DATE:

REVISED DATE:

SHEET NO. : E3.3

ROOM CONTROLLER NOTES:

1. CONTRACTOR SHALL LOCATE ALL ROOM CONTROLLERS ABOVE DOORS IN EACH ROOM 6" ABOVE CEILING GRID. PROVIDE ACCESS PANELS WHERE LOCATED ABOVE HARD CEILINGS OR MOUNT IN UTILITY TYPE ROOMS WHENEVER POSSIBLE. ROOM CONTROLLER SHOWN ON THIS PLAN IS DIAGRAMMATIC FOR CIRCUITRY. DO NOT USE THESE FOR ACTUAL LOCATIONS. PROVIDE A WHITE PHENOLIC LABEL WITH 1" BLACK TEXT THAT READS 'RC' GLUED ON CEILING GRID UNDER POWER PACK FOR EACH LOCATION FOR FUTURE MAINTENANCE.

STORM SHELTER NOTES:

1. CONTRACTOR SHALL INSTALL ALL CONDUITS ENTERING OR EXITING THE STORM SHELTER UNDERGROUND SUCH THAT THEY DO NOT PENETRATE THE STORM SHELTER WALLS OR CEILING. IF A PENETRATION IS REQUIRED, THEN THERE SHALL BE NO PENETRATION GREATER THAN 2". ANY PENETRATIONS SHALL CONFORM TO ICC 500.

SHEET NOTES:

1. CIRCUIT EXHAUST FAN TO SWITCHED EQUIPMENT POWER CIRCUIT IN SAME ROOM.
2. EXTERIOR UNIT PROVIDES POWER TO INDOOR UNIT. PROVIDE CIRCUITS AS REQUIRED.

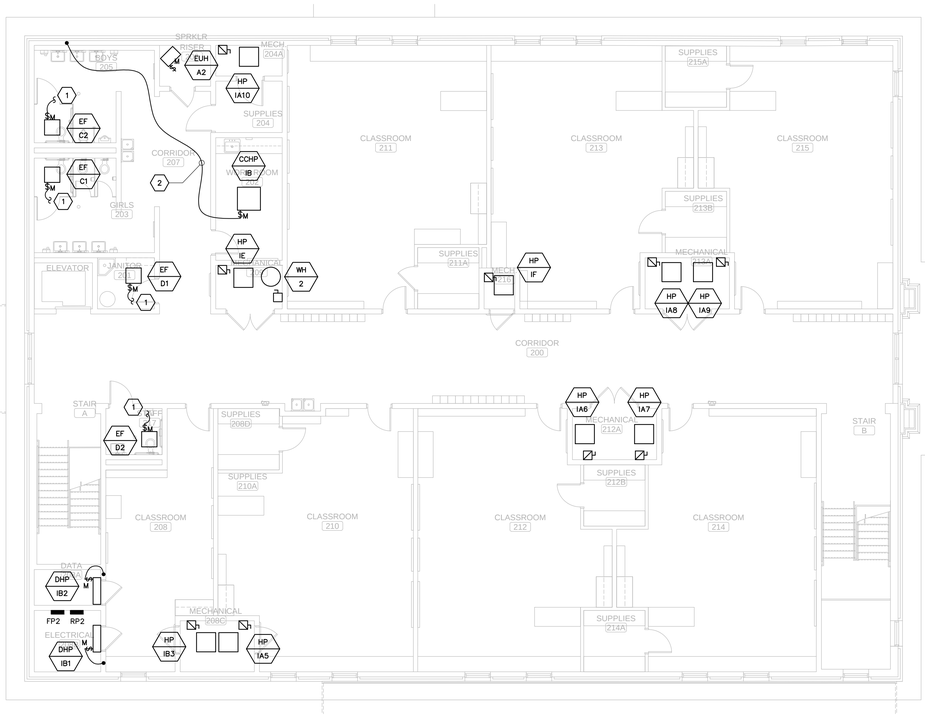

PROJECT NORTH

SECOND FLOOR PLAN- POWER

SCALE: 1/8"=1'-0"

1/8" = 1'-0

8' 0 8 16 FT

GRAPHIC SCALE

Gunn & Associates, P.C.
Consulting Engineers
3102 Highway 14
Millbrook, AL 36054
Tel: 334.285.1273
1200 Providence Park, Suite 200
Birmingham, AL 35242
GA#22-065

CLASSROOM ADDITION

FOR

UNION HILL SCHOOL

SOMERVILLE, ALABAMA

FOR THE

MORGAN COUNTY BOARD OF EDUCATION

McKEE and ASSOCIATES
ARCHITECTURE and INTERIOR DESIGN
631 SOUTH HULL STREET MONTGOMERY, ALABAMA 36104 (334) 834-9933

Charles M. Brewer
LICENSED
No. 37959
PROFESSIONAL
10-13-2022
ENGINEER
CHARLES M. BREWER

SHEET TITLE : FLOOR PLAN
ELEMENTARY SCHOOL
EQUIPMENT POWER

MCKEE JOB # : 22-134

DRAWN BY : CMB

DATE: 10.13.2022

REVISED DATE:

REVISED DATE:

REVISED DATE:

SHEET NO. : E3.4

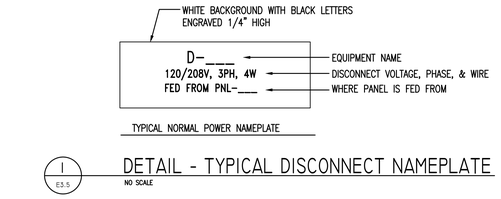

1 / E3.5 DETAIL - TYPICAL DISCONNECT NAMEPLATE

NO SCALE

NOTE:

1. FOR DISTANCE GREATER THAN 48" CONDUIT TO BE ROUTED BELOW GRADE WITH 6" OF MECH. UNIT, STUB-UP W/ RIGID ELBOW THRU CONCRETE PAD. PROVIDE FLEXIBLE CONNECTION FROM ELBOW TO MECH. UNIT, W/ CONNECTION MADE AT UNIT AS SHOWN ABOVE.

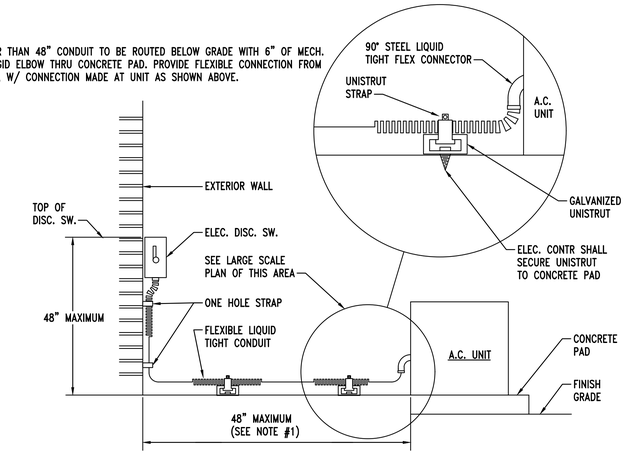

2 / E3.5 MECHANICAL UNIT CONNECTION DETIAL

NO SCALE

GENERAL NOTES:

1. COORDINATE WITH MECHANICAL/PLUMBING DRAWINGS FOR EXACT LOCATIONS OF EQUIPMENT.
2. MOUNT EXTERIOR DISCONNECTS ON EXTERIOR WALLS AT LEAST 18" FROM WINDOWS. LOCATIONS OF DISCONNECTS AND EQUIPMENT ARE SHOWN FOR DRAWING CLARITY PURPOSES ONLY.
3. COORDINATE WITH MECHANICAL/PLUMBING CONTRACTORS TO INSURE OVERCURRENT PROTECTION DEVICES FOR THEIR EQUIPMENT IS SIZED PER MANUFACTURER'S RECOMMENDATIONS. ENGINEER SIZED OVERCURRENT PROTECTION ACCORDING TO MECHANICAL/PLUMBING DRAWINGS AND SPECIFICATIONS, ACTUAL EQUIPMENT SUPPLIED MAY DIFFER. ELECTRICAL CONTRACTOR SHALL WORK WITH OTHER TRADE DISCIPLINES TO INSURE ANY CHANGES WILL BE INSTALLED CORRECTLY AT THE COST OF THE PERSON MAKING THE CHANGES.
4. ALL FLEXIBLE CONNECT TO HVAC UNITS SHALL BE RUN PARALLEL TO HARD SURFACE AND STRAPPED AT LEAST EVERY 2'.
5. CONTRACTOR SHALL PROVIDE CONDUIT FOR MECHANICAL CONTROLS. COORDINATE EXACT LOCATIONS WITH MECHANICAL CONTRACTOR PRIOR TO ROUGH-IN.
6. ALL DISCONNECTS TO HAVE NAMEPLATE AS SHOWN IN DETAIL (2) THIS SHEET, NO EXCEPTIONS.
7. PROVIDE DEDICATED NEUTRALS FOR EACH MULTIWIRE HOMERUN PER NEC.
8. COORDINATE WITH GENERAL EQUIPMENT SCHEDULES ON THIS SHEET FOR CIRCUITRY OF ALL EQUIPMENT TAGGED ON THIS SHEET.
9. SEE DETAIL 1 THIS SHEET FOR MECHANICAL UNIT CONNECTION DETAIL.

GENERAL EQUIPMENT SCHEDULE

EQUIPMENT MARK:	EQUIPMENT DESCRIPTION:	VOLTAGE/PHASE:	ELECTRICAL CHARACTERISTICS:			DISCONNECT:	FUSE:	HOMERUN:		FEEDER:
			HP	KW	AMPS			PANEL	CIRCUIT	
CCHP-IA	INDOOR CASSETTE HEAT PUMP	208V, 1PH	---	---	1.0	TS	F	NOTE 8	-	2#12 & 1#12(G)-3/4" C.
CCHP-IB	INDOOR CASSETTE HEAT PUMP	208V, 1PH	---	---	1.0	TS	F	NOTE 8	-	2#12 & 1#12(G)-3/4" C.
CCHP-IC1	INDOOR CASSETTE HEAT PUMP	208V, 1PH	---	---	1.0	TS	F	NOTE 8	-	2#12 & 1#12(G)-3/4" C.
CCHP-IC2	INDOOR CASSETTE HEAT PUMP	208V, 1PH	---	---	1.0	TS	F	NOTE 8	-	2#12 & 1#12(G)-3/4" C.
CCHP-IC3	INDOOR CASSETTE HEAT PUMP	208V, 1PH	---	---	1.0	TS	F	NOTE 8	-	2#12 & 1#12(G)-3/4" C.
CCHP-IC4	INDOOR CASSETTE HEAT PUMP	208V, 1PH	---	---	1.0	TS	F	NOTE 8	-	2#12 & 1#12(G)-3/4" C.
CCHP-OA	OUTDOOR CASSETTE HEAT PUMP	208V, 1PH	---	---	10.4 FLA	30/2/3R	F	FP1A	1,3	3#12 & 1#12(G)-3/4" C.
CCHP-OB	OUTDOOR CASSETTE HEAT PUMP	208V, 1PH	---	---	10.4 FLA	30/2/3R	F	FP1A	5,7	3#12 & 1#12(G)-3/4" C.
CCHP-OC1	OUTDOOR CASSETTE HEAT PUMP	208V, 1PH	---	---	10.4 FLA	30/2/3R	F	FP1C	35,37	3#12 & 1#12(G)-3/4" C.
CCHP-OC2	OUTDOOR CASSETTE HEAT PUMP	208V, 1PH	---	---	10.4 FLA	30/2/3R	F	FP1C	39,41	3#12 & 1#12(G)-3/4" C.
CCHP-OC3	OUTDOOR CASSETTE HEAT PUMP	208V, 1PH	---	---	10.4 FLA	30/2/3R	F	FP1B	6,8	3#12 & 1#12(G)-3/4" C.
CCHP-OC4	OUTDOOR CASSETTE HEAT PUMP	208V, 1PH	---	---	10.4 FLA	30/2/3R	F	FP1B	10,12	3#12 & 1#12(G)-3/4" C.
DHP-IA1	INDOOR DUCTLESS HEAT PUMP	208V, 1PH	---	---	1.5	TS	F	NOTE 8	-	2#12 & 1#12(G)-3/4" C.
DHP-IA2	INDOOR DUCTLESS HEAT PUMP	208V, 1PH	---	---	1.5	TS	F	NOTE 8	-	2#12 & 1#12(G)-3/4" C.
DHP-IB1	INDOOR DUCTLESS HEAT PUMP	208V, 1PH	---	---	1.5	TS	F	NOTE 8	-	2#12 & 1#12(G)-3/4" C.
DHP-IB2	INDOOR DUCTLESS HEAT PUMP	208V, 1PH	---	---	1.5	TS	F	NOTE 8	-	2#12 & 1#12(G)-3/4" C.
DHP-IB3	INDOOR DUCTLESS HEAT PUMP	208V, 1PH	---	---	1.5	TS	F	NOTE 8	-	2#12 & 1#12(G)-3/4" C.
DHP-IB4	INDOOR DUCTLESS HEAT PUMP	208V, 1PH	---	---	1.5	TS	F	NOTE 8	-	2#12 & 1#12(G)-3/4" C.
DHP-OA1	OUTDOOR DUCTLESS HEAT PUMP	208V, 1PH	---	---	7.2 FLA	30/2/3R	F	FP1A	17,19	2#12 & 1#12(G)-3/4" C.
DHP-OA2	OUTDOOR DUCTLESS HEAT PUMP	208V, 1PH	---	---	7.2 FLA	30/2/3R	F	FP1B	7,9	2#12 & 1#12(G)-3/4" C.
DHP-OB1	OUTDOOR DUCTLESS HEAT PUMP	208V, 1PH	---	---	7.2 FLA	30/2/3R	F	FP1A	9,11	2#12 & 1#12(G)-3/4" C.
DHP-OB2	OUTDOOR DUCTLESS HEAT PUMP	208V, 1PH	---	---	7.2 FLA	30/2/3R	F	FP1A	13,15	2#12 & 1#12(G)-3/4" C.
DHP-OB3	OUTDOOR DUCTLESS HEAT PUMP	208V, 1PH	---	---	7.2 FLA	30/2/3R	F	FP1B	11,13	2#12 & 1#12(G)-3/4" C.
DHP-OB4	OUTDOOR DUCTLESS HEAT PUMP	208V, 1PH	---	---	7.2 FLA	30/2/3R	F	FP1A	21,23	2#12 & 1#12(G)-3/4" C.
EC-1	ELEVATOR CAB	120V, 1PH	---	---		30/2/1	F	RP1A	22	2#12 & 1#12(G)-3/4" C.
EF-A1	EXHAUST FAN	120V, 1PH	---	.25	---	TS	NOTE 7	INVERTER	6	2#12 & 1#12(G)-3/4" C.
EF-A2	EXHAUST FAN	120V, 1PH	---	.25	---	TS	NOTE 7	INVERTER	6	2#12 & 1#12(G)-3/4" C.
EF-B1	EXHAUST FAN	120V, 1PH	---	.1	---	TS	NOTE 7	INVERTER	6	2#12 & 1#12(G)-3/4" C.
EF-B2	EXHAUST FAN	120V, 1PH	---	.1	---	TS	NOTE 7	INVERTER	6	2#12 & 1#12(G)-3/4" C.
EF-C1	EXHAUST FAN	120V, 1PH	---	.1	---	TS	NOTE 7	FP2	9	2#12 & 1#12(G)-3/4" C.
EF-C2	EXHAUST FAN	120V, 1PH	---	.1	---	TS	NOTE 7	FP2	9	2#12 & 1#12(G)-3/4" C.
EF-C3	EXHAUST FAN	120V, 1PH	---	.1	---	TS	NOTE 7	RP1C	3	2#12 & 1#12(G)-3/4" C.
EF-C4	EXHAUST FAN	120V, 1PH	---	.1	---	TS	NOTE 7	RP1C	3	2#12 & 1#12(G)-3/4" C.
EF-D1	EXHAUST FAN	120V, 1PH	---	.1	---	TS	NOTE 7	FP2	9	2#12 & 1#12(G)-3/4" C.
EF-D2	EXHAUST FAN	120V, 1PH	---	.1	---	TS	NOTE 7	FP2	5	2#12 & 1#12(G)-3/4" C.
EF-E	EXHAUST FAN	120V, 1PH	---	.1	---	TS	NOTE 7	INVERTER	6	2#12 & 1#12(G)-3/4" C.
ELEV-1	ELEVATOR PUMP	208V, 3PH	---	---		200/3/1	F	MSA	26,28,30	3#1 & 1#6(G)-1 1/4"C.
EUH-A1	ELECTRIC UNIT HEATER	208V, 1PH	---	3.0	---	TS		FP1B	15,17	2#10 & 1#10(G)-3/4" C.
EUH-A2	ELECTRIC UNIT HEATER	208V, 1PH	---	3.0	---	TS		FP2	2,4	2#10 & 1#10(G)-3/4" C.
HP-IA1	INDOOR HEAT PUMP	208V, 3PH	1/2	10.0(HEAT)	---	60/3/1	F	FP1B	19,21,23	3#8 & 1#10(G)-3/4"C.
HP-IA2	INDOOR HEAT PUMP	208V, 3PH	1/2	10.0(HEAT)	---	60/3/1	F	FP1B	27,29,31	3#8 & 1#10(G)-3/4"C.
HP-IA3	INDOOR HEAT PUMP	208V, 3PH	1/2	10.0(HEAT)	---	60/3/1	F	FP1B	33,35,37	3#8 & 1#10(G)-3/4"C.
HP-IA4	INDOOR HEAT PUMP	208V, 3PH	1/2	10.0(HEAT)	---	60/3/1	F	FP1B	37,39,41	3#8 & 1#10(G)-3/4"C.
HP-IA5	INDOOR HEAT PUMP	208V, 3PH	1/2	10.0(HEAT)	---	60/3/1	F	FP2	1,3,5	3#8 & 1#10(G)-3/4"C.
HP-IA6	INDOOR HEAT PUMP	208V, 3PH	1/2	10.0(HEAT)	---	60/3/1	F	FP2	7,9,11	3#8 & 1#10(G)-3/4"C.
HP-IA7	INDOOR HEAT PUMP	208V, 3PH	1/2	10.0(HEAT)	---	60/3/1	F	FP2	13,15,17	3#8 & 1#10(G)-3/4"C.
HP-IA8	INDOOR HEAT PUMP	208V, 3PH	1/2	10.0(HEAT)	---	60/3/1	F	FP2	19,21,23	3#8 & 1#10(G)-3/4"C.
HP-IA9	INDOOR HEAT PUMP	208V, 3PH	1/2	10.0(HEAT)	---	60/3/1	F	FP2	25,27,29	3#8 & 1#10(G)-3/4"C.
HP-IA10	INDOOR HEAT PUMP	208V, 3PH	1/2	10.0(HEAT)	---	60/3/1	F	FP1B	43,45,47	3#8 & 1#10(G)-3/4"C.
HP-IB1	INDOOR HEAT PUMP	208V, 1PH	1/2	6.0(HEAT)	---	60/2/1	F	FP1A	25,27	2#8 & 1#10(G)-3/4"C.
HP-IB2	INDOOR HEAT PUMP	208V, 1PH	1/2	6.0(HEAT)	---	60/2/1	F	FP1A	29,31	2#8 & 1#10(G)-3/4"C.
HP-IB3	INDOOR HEAT PUMP	208V, 1PH	1/2	6.0(HEAT)	---	60/2/1	F	FP2	6,8	2#8 & 1#10(G)-3/4"C.
HP-IC	INDOOR HEAT PUMP	208V, 1PH	1/2	8.0(HEAT)		60/2/1	F	FP1B	14,16	2#8 & 1#10(G)-3/4"C.
HP-ID	INDOOR HEAT PUMP	208V, 1PH	1/2	5.0(HEAT)		60/2/1	F	FP1A	20,22	2#8 & 1#10(G)-3/4"C.
HP-IE	INDOOR HEAT PUMP	208V, 1PH	3/4	8.0(HEAT)		60/2/1	F	FP2	10,12	2#8 & 1#10(G)-3/4"C.
HP-IF	INDOOR HEAT PUMP	208V, 1PH	1/2	6.0(HEAT)		60/2/1	F	FP2	14,16	2#8 & 1#10(G)-3/4"C.
HP-IG	INDOOR HEAT PUMP	208V, 1PH	1/2	6.0(HEAT)		60/2/1	F	FP1C	27,29	2#8 & 1#10(G)-3/4"C.
HP-OA1	OUTDOOR HEAT PUMP	208V, 3PH	---	---	12.5 FLA	30/3/3R	F	FP1B	20,22,24	3#12 & 1#12(G)-3/4" C.
HP-OA2	OUTDOOR HEAT PUMP	208V, 3PH	---	---	12.5 FLA	30/3/3R	F	FP1B	26,28,30	3#12 & 1#12(G)-3/4" C.
HP-OA3	OUTDOOR HEAT PUMP	208V, 3PH	---	---	12.5 FLA	30/3/3R	F	FP1B	32,34,36	3#12 & 1#12(G)-3/4" C.
HP-OA4	OUTDOOR HEAT PUMP	208V, 3PH	---	---	12.5 FLA	30/3/3R	F	FP1B	38,40,42	3#12 & 1#12(G)-3/4" C.
HP-OA5	OUTDOOR HEAT PUMP	208V, 3PH	---	---	12.5 FLA	30/3/3R	F	FP1A	14,16,18	3#12 & 1#12(G)-3/4" C.
HP-OA6	OUTDOOR HEAT PUMP	208V, 3PH	---	---	12.5 FLA	30/3/3R	F	FP2	43,45,47	3#12 & 1#12(G)-3/4" C.
HP-OA7	OUTDOOR HEAT PUMP	208V, 3PH	---	---	12.5 FLA	30/3/3R	F	FP2	49,51,53	3#12 & 1#12(G)-3/4" C.
HP-OA8	OUTDOOR HEAT PUMP	208V, 3PH	---	---	12.5 FLA	30/3/3R	F	FP2	55,57,59	3#12 & 1#12(G)-3/4" C.
HP-OA9	OUTDOOR HEAT PUMP	208V, 3PH	---	---	12.5 FLA	30/3/3R	F	FP2	61,63,65	3#12 & 1#12(G)-3/4" C.
HP-OA10	OUTDOOR HEAT PUMP	208V, 3PH	---	---	12.5 FLA	30/3/3R	F	FP2	67,69,71	3#12 & 1#12(G)-3/4" C.
HP-OB1	OUTDOOR HEAT PUMP	208V, 1PH			11.5 FLA	30/2/3R	F	FP1A	2,4	2#10 & 1#10(G)-3/4" C.
HP-OB2	OUTDOOR HEAT PUMP	208V, 1PH			11.5 FLA	30/2/3R	F	FP1A	6,8	2#10 & 1#10(G)-3/4" C.
HP-OB3	OUTDOOR HEAT PUMP	208V, 1PH			11.5 FLA	30/2/3R	F	FP1A	10,12	2#10 & 1#10(G)-3/4" C.
HP-OC	OUTDOOR HEAT PUMP	208V, 1PH			16.5 FLA	30/2/3R	F	FP1B	68,70	2#10 & 1#10(G)-3/4" C.
HP-OD	OUTDOOR HEAT PUMP	208V, 1PH			9.5 FLA	30/2/3R	F	FP1A	24,26	2#10 & 1#10(G)-3/4" C.
HP-OE	OUTDOOR HEAT PUMP	208V, 1PH			16.5 FLA	30/2/3R	F	FP1A	33,35	2#10 & 1#10(G)-3/4" C.
HP-OF	OUTDOOR HEAT PUMP	208V, 1PH			11.5	30/2/3R	F	FP1A	37,39	2#10 & 1#10(G)-3/4" C.
HP-OG	OUTDOOR HEAT PUMP	208V, 1PH			11.5	30/2/3R	F	FP1C	31,33	2#10 & 1#10(G)-3/4" C.
SAF-1	SUPPLY AIR FAN	208V, 1PH	1.0			60/2/1	F	INVERTER	2,4	2#8 & 1#10(G)-3/4"C.
SP-1	SUMP PUMP	120V, 1PH	1/2			5-20R		RP1A	9	2#12 & 1#12(G)-3/4" C.
WH-1	WATER HEATER	208V, 1PH		4.5(HEAT)		30/2/1	p	FP1B	49,51	2#10 & 1#10(G)-3/4" C.
WH-2	WATER HEATER	208V, 1PH		4.5(HEAT)		30/2/1		FP2	18,20	2#10 & 1#10(G)-3/4" C.
WH-3	WATER HEATER	208V, 1PH		4.5(HEAT)		30/2/1		FP1C	40,42	2#10 & 1#10(G)-3/4" C.

NOTES:
1. COORDINATE WITH MANUFACTURER'S CUTSHEETS OR NAMEPLATE DATA AND ADJUST OVERCURRENT PROTECTION AS NEEDED TO PROTECT EQUIPMENT PER MANUFACTURER'S RECOMMENDATIONS AND TO COMPLY WITH NEC AND ALL LOCAL CODES. COORDINATION SHALL BE DONE PRIOR TO BIDS AND ACCOUNTED FOR IN THE CONTRACTOR'S BID PRICE.
2. ALL DISCONNECTS SHALL BE HEAVY DUTY TYPE.
3. ALL FUSES SHALL BE SIZED PER NAMEPLATE DATA.
4. (F - FUSED), (NF - NON-FUSED), (TS - MANUAL MOTOR STARTER WITH THERMAL OVERLOAD), (W & WP - WEATHERPROOF), ("30-AMP" - 30-AMP RATED)
5. NOTE NOT USED
6. CONTRACTOR SHALL COORDINATE EXACT REQUIREMENTS AND LOCATIONS FOR ALL CIRCULATING PUMPS AND TIME CLOCKS WITH MECHANICAL CONTRACTOR PRIOR TO ROUGH-IN.
7. CIRCUIT TO SWITCHED 120V LIGHTING CIRCUIT IN SAME ROOM.
8. INDOOR UNIT POWERED BY OUTDOOR UNIT, COORDINATE AND PROVIDE ALL REQUIRED CONDUIT AND CONDUCTORS FOR A COMPLETE INSTALLATION.

CLASSROOM ADDITION
FOR
UNION HILL SCHOOL
SOMERVILLE, ALABAMA
FOR THE
MORGAN COUNTY BOARD OF EDUCATION

McKEE and ASSOCIATES
ARCHITECTURE and INTERIOR DESIGN
631 SOUTH HULL STREET MONTGOMERY, ALABAMA 36104 (334) 834-9933

CHARLES M. BREWER
LICENSED
No. 37059
PROFESSIONAL
ENGINEER
10-13-2022

SHEET TITLE : EQUIPMENT SCHEDULE AND DETAILS

MCKEE JOB # : 22-134

DRAWN BY : CMB

DATE: 10.13.2022

REVISED DATE:

REVISED DATE:

REVISED DATE:

Gunn & Associates, P.C.
Consulting Engineers
3102 Highway 14
Millbrook, AL 36054
Tel: 334.285.1273
1200 Providence Park, Suite 200
Birmingham, AL 35242
GA#22-065

SHEET NO. : E3.5

STORM SHELTER NOTES:

1. CONTRACTOR SHALL INSTALL ALL CONDUITS ENTERING OR EXITING THE STORM SHELTER UNDERGROUND SUCH THAT THEY DO NOT PENETRATE THE STORM SHELTER WALLS OR CEILING. IF A PENETRATION IS REQUIRED, THEN THERE SHALL BE NO PENETRATION GREATER THAN 2". ANY PENETRATIONS SHALL CONFORM TO ICC 500.

SHEET NOTES:

1. MOUNT OUTLETS IN KNEE SPACE OF DESK. EXTEND CONDUIT FROM WALL THROUGH MILLWORK. COORDINATE WITH MILLWORK SHOP DRAWINGS PRIOR TO ROUGH-IN. PROVIDE TWO (2) 2" C. ABOVE CEILING WITH (2) CAT6 CABLES EXTENDED TO NEAREST IDF.
2. PROVIDE DOOR ROUGH-IN PER DETAIL A, SHEET E8.2
3. PROVIDE DOOR ROUGH-IN PER DETAIL B, SHEET E8.2
4. PROVIDE FLUSH MOUNTED FACP ANNUNCIATOR.
5. EXTEND CONDUIT TO EXISTING MDF. VERIFY PATH AND DISTANCE PRIOR TO BID. SEE DETAIL SHEET E8.1.
6. PROVIDE TWO (2) 2" EC FROM IDF TO JAN CLOSET BELOW GRADE AND EXTEND UP ABOVE ACCESSIBLE CEILING IN CORRIDOR TO PROVIDE PATH FOR VOICE/DATA FROM INSIDE STORM SHELTER TO UNPROTECTED AREAS
7. CONTRACTOR SHALL CONNECT NEW FACP PANEL WITH ALARM DEVICES TO EXISTING FIRE ALARM CONTROL PANEL. CONTRACTOR SHALL EXPAND EXISTING FIRE ALARM CONTROL PANEL AS REQUIRED TO ACCOMMODATE NEW DEVICES. CONTRACTOR SHALL TEST AND CERTIFY EXISTING FIRE ALARM SYSTEM UPON COMPLETION OF NEW WORK. SEE SHEET E1.1 FOR LOCATION
8. PROVIDE COMPLETE ELEVATOR TWO-WAY COMMUNICATION SYSTEM. SEE DETAIL SHEET E4.2.
9. CONTRACTOR SHALL CONNECT NEW BELL TO EXISTING LATHAM BELL SYSTEM LOCATED IN MAIN BUILDING.

GENERAL NOTES:

1. COORDINATE SYSTEMS WITH CORRESPONDING RISER DIAGRAMS.
2. COORDINATE AND MOUNT COMMUNICATIONS OUTLETS WITHIN 6" OF CORRESPONDING POWER RECEPTACLE.

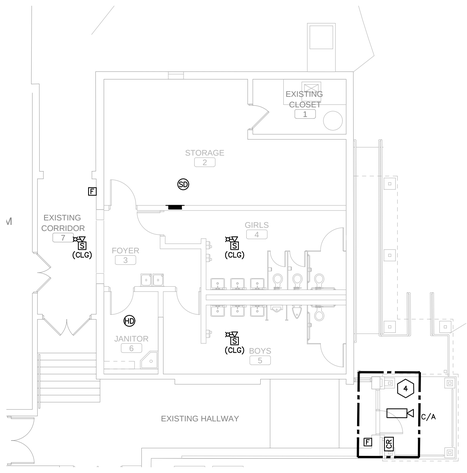

PROJECT NORTH

RESTROOM FLOOR PLAN- AUXILIARY

SCALE: 1/8"=1'-0"

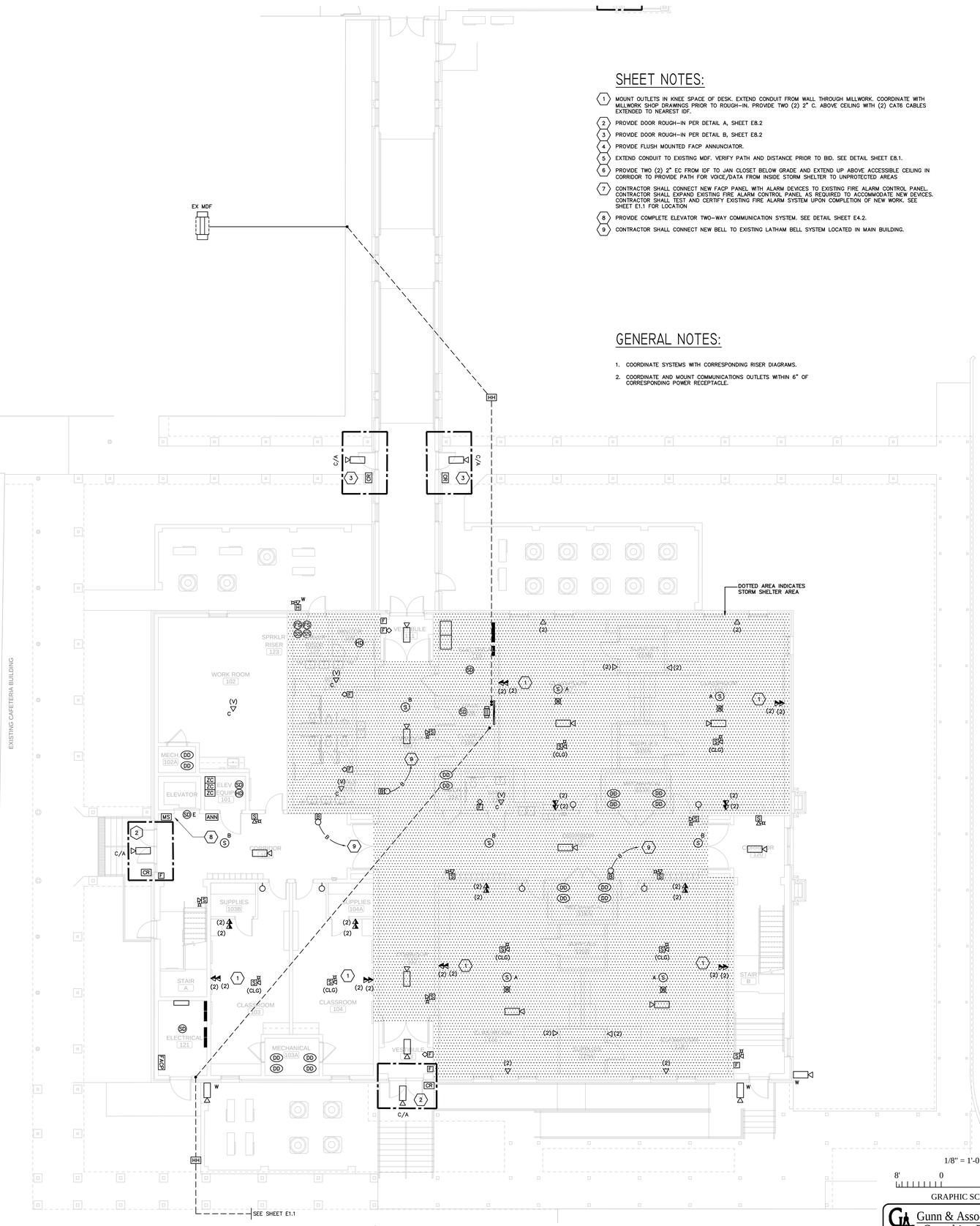

PROJECT NORTH

FIRST FLOOR PLAN- AUXILIARY

SCALE: 1/8"=1'-0"

1/8" = 1'-0

8' 0 8 16 FT

GRAPHIC SCALE

Gunn & Associates, P.C.
Consulting Engineers
3102 Highway 14
Millbrook, AL 36054
Tel: 334.285.1273
1200 Providence Park, Suite 200
Birmingham, AL 35242
GA#22-065

CLASSROOM ADDITION

FOR

UNION HILL SCHOOL

SOMERVILLE, ALABAMA

FOR THE

MORGAN COUNTY BOARD OF EDUCATION

McKEE and ASSOCIATES
ARCHITECTURE and INTERIOR DESIGN
631 SOUTH HULL STREET MONTGOMERY, ALABAMA 36104 (334) 834-9933

Charles M. Brewer
LICENSED
No. 37959
PROFESSIONAL
10-13-2022
ENGINEER
CHARLES M. BREWER

SHEET TITLE : FIRST FLOOR PLAN - AUXILIARY

MCKEE JOB # : 22-134

DRAWN BY : CMB

DATE: 10.13.2022

REVISED DATE:

REVISED DATE:

REVISED DATE:

SHEET NO. : E4.1

STORM SHELTER NOTES:

1. CONTRACTOR SHALL INSTALL ALL CONDUITS ENTERING OR EXITING THE STORM SHELTER UNDERGROUND SUCH THAT THEY DO NOT PENETRATE THE STORM SHELTER WALLS OR CEILING. IF A PENETRATION IS REQUIRED, THEN THERE SHALL BE NO PENETRATION GREATER THAN 2". ANY PENETRATIONS SHALL CONFORM TO ICC 500.

SHEET NOTES:

1. TWO (2) 2" FIRE RATED SLEEVES ABOVE ACCESSIBLE CEILING
2. PROVIDE TWO (2) 2" EC FROM IDF TO JAN CLOSET BELOW GRADE AND EXTEND UP ABOVE ACCESSIBLE CEILING IN CORRIDOR TO PROVIDE PATH FOR VOICE/DATA FROM INSIDE STORM SHELTER TO UNPROTECTED AREAS
3. PROVIDE COMPLETE ELEVATOR TWO-WAY COMMUNICATION SYSTEM. SEE DETAIL THIS SHEET.
4. CONTRACTOR SHALL CONNECT NEW BELL TO EXISTING LATHAM BELL SYSTEM LOCATED IN MAIN BUILDING.

GENERAL NOTES:

1. COORDINATE SYSTEMS WITH CORRESPONDING RISER DIAGRAMS.
2. MOUNT ALL COMMUNICATION OUTLETS WITH 6" OF A POWER OUTLET.
3. FINAL DATA, WIFI, AND CAMERA CONNECTIONS BY OWNERS REP.
4. PROVIDE A GREEN DOT STICKER ON CEILING GRID UNDER EACH WIRELESS ACCESS POINT TO PROVIDE LOCATION TO IT STAFF. PROVIDE 15' MINIMUM OF CAT6 SLACK, COILED UP ABOVE CEILING.

2-WAY COMMUNICATIONS SYSTEM NOTES:

1. CONTRACTOR SHALL PROVIDE A TWO WAY COMMUNICATIONS SYSTEM IN THE ELEVATOR LOBBIES FOR EACH FLOOR PER IBC 1007.8. PROVIDE ONE MASTER STATION AT THE ELEVATOR ON THE FIRST FLOOR. PROVIDE ONE SATELLITE STATION BESIDE THE ELEVATOR ON THE SECOND. THE STATIONS SHALL BE FLUSH MOUNTED WITH BRUSHED STAINLESS STEEL FACEPLATES. PROVIDE INTERCONNECTING WIRING AS RECOMMENDED BY THE MANUFACTURER.
2. SYSTEM SHALL USE REGULAR PHONE LINES OR PBX
3. PHONE LINE POWERED: NO POWER SUPPLY OR BATTERIES.
4. PUSH BUTTON ONCE TO CALL, THEN HANDS FREE.
5. LED INDICATOR FOR HEARING IMPAIRED.
6. BUILT-IN AUTO DIALER WITH ABILITY TO DIAL TWO NUMBERS: IF FIRST NUMBER IS BUSY OR DON'T ANSWER, THEN DIALER DIALS SECOND NUMBER.
7. PROVIDE AUTO-ANSWER TO ALLOW SECURITY TO MONITOR AND INITIATE CALLS WITH EMERGENCY PHONE.
8. PROVIDE ABILITY TO AUTOMATICALLY IDENTIFY ATTENDANT OF LOCATION OF CALLING PHONE BY RECORDED MESSAGE AND DIGITAL DISPLAY.
9. ALL SYSTEM COMPONENTS, ENCLOSURES, FRAMES, SURGE ARRESTORS, ETC., SHALL BE GROUNDED.
10. CIRCUITS IN ACCORDANCE WITH MANUFACTURER'S RECOMMENDATIONS AND SPECIFICATIONS.
11. ALL WIRING FOR THIS SYSTEM SHALL BE INSTALLED IN CONDUIT THROUGH OUT THE BUILDING.
12. THE COMPLETE 2-WAY COMMUNICATIONS SYSTEM IS IN THE BASE BID.
13. CONTRACTOR SHALL PROVIDE TWO (2) CAT 6 CABLES IN THE BASE BID FROM THE MASTER STATION TO THE TELEPHONE DEMARK IN FIRST FLOOR IDF ROOM FOR EXTERIOR CALL OUT.

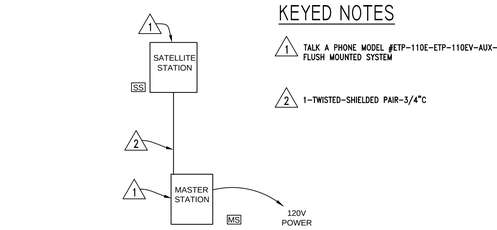

KEYED NOTES

1. TALK A PHONE MODEL #ETP-110E-ETP-110EV-AUX-MS-400. FLUSH MOUNTED SYSTEM
2. 1-TWISTED-SHIELDED PAIR-3/4"C

1 / E4.2 — 2-WAY COMMUNCIATIONS SYSTEM RISER
NO SCALE

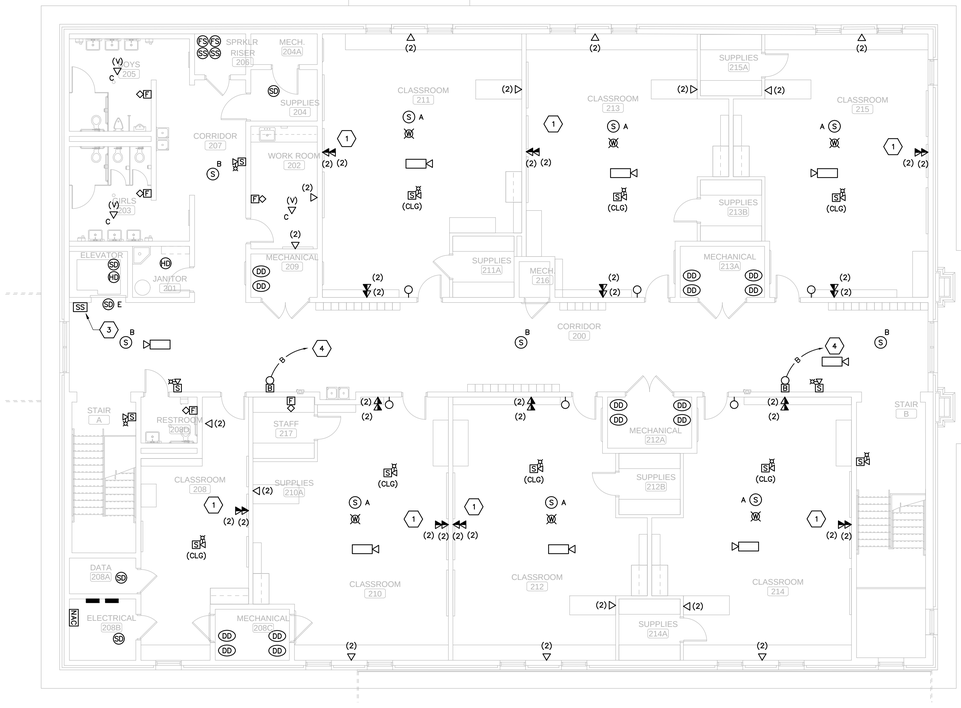

PROJECT NORTH

SECOND FLOOR PLAN - AUXILIARY
SCALE: 1/8"=1'-0"

1/8" = 1'-0

8' 0 8 16 FT

GRAPHIC SCALE

Gunn & Associates, P.C.
Consulting Engineers
3102 Highway 14
Millbrook, AL 36054
Tel: 334.285.1273
1200 Providence Park, Suite 200
Birmingham, AL 35242
GA#22-065

CLASSROOM ADDITION
FOR
UNION HILL SCHOOL
SOMERVILLE, ALABAMA
FOR THE
MORGAN COUNTY BOARD OF EDUCATION

McKEE and ASSOCIATES
ARCHITECTURE and INTERIOR DESIGN
631 SOUTH HULL STREET MONTGOMERY, ALABAMA 36104 (334) 834-9933

Charles M. Brewer
LICENSED
No. 37859
PROFESSIONAL
10-13-2022
ENGINEER
CHARLES M. BREWER

SHEET TITLE : SECOND FLOOR PLAN - AUXILIARY

MCKEE JOB # : 22-134

DRAWN BY : CMB

DATE: 10.13.2022

REVISED DATE:

REVISED DATE:

REVISED DATE:

SHEET NO. : E4.2

LIGHTING FIXTURE SCHEDULE

TYPE:	MANUFACTURER NUMBER AND EQUALS:	VOLTAGE:	MOUNTING:	LAMP TYPE:	LAMP QUANTITY:	DESCRIPTION:
L4	COOPER NO. 4SSNLED-LD5-50SL-LW-UNV-L840-CD-1 COLUMBIA NO. LCL4-40ML-EDU PHILIPS NO. FSS455L840-UNV-DIM	MVOLT	SURFACE	L.E.D. 4000K	1 5200 LUMEN 46 WATTS	WALL OR SURFACE MOUNTED LINEAR L.E.D. LUMINAIRE, 4'-0"L., WHITE FINISH WITH FROSTED LENS.
LG48	COLUMBIA NO. SRP24-40LG-EDU OR EQUAL BY COOPER OR HE WILLIAMS	MVOLT	RECESSED	L.E.D. 4000K	1 4800 LUMEN 42 WATTS	RECESSED MOUNTED, EDGE LIT, L.E.D. FLAT PANEL, 2'x4' LAY-IN, WHITE FINISH.
LG72	HUBBELL NO. SRP-24-40VLHEG-EDU OR EQUAL BY COOPER OR HE WILLIAMS	MVOLT	RECESSED	L.E.D. 4000K	1 7200 LUMEN 54 WATTS	RECESSED MOUNTED, EDGE LIT, L.E.D. FLAT PANEL, 2'x4' LAY-IN, WHITE FINISH.
PL1	EATON NO. 4VT2-LD5-6-UNV OR EQUAL BY HE WILLIAMS, HUBBELL	120/277	CEILING	LED 4000K	1 6,000 LM 51 WATTS	EXTERIOR LINEAR LED 4'-0" LINEAR VAPORTITE FIXTURE WITH GASKETS AND LENS.
SL1	COOPER NO. 4SWLED-72HL-LW-UNV-L840-CD1-U OR PRIOR APPROVED EQUAL BY HE WILLIAMS OR HUBBELL	MVOLT	WALL	L.E.D. 4000K	1 7200 LUMEN 68 WATTS	WALL MOUNTED L.E.D. LUMINAIRE STAIRWELL FIXTURE WITH INTEGRAL OCC. SENSOR, BATTERY PACK, AND DIMMING
WP1	COOPER NO. ISC-SA1-E740 -U-T4W-XX OR PRIOR APPROVED EQUAL BY HE WILLIAMS OR HUBBELL	MVOLT	WALL	L.E.D. 4000K	1 5600 LUMEN 58 WATTS	EXTERIOR WALL MOUNTED L.E.D. LUMINAIRE (HALF CYLINDER) WITH CUT OFF, FINISH AS SELECTED BY ARCHITECT. MOUNTED 16'-0" ABOVE GRADE. VERIFY WITH ARCH PRIOR TO ROUGH-IN.
WP1A	COOPER NO. ISC-SA1-E740 -U-T4W-XX OR PRIOR APPROVED EQUAL BY HE WILLIAMS OR HUBBELL	MVOLT	WALL	L.E.D. 4000K	1 5600 LUMEN 58 WATTS	EXTERIOR WALL MOUNTED L.E.D. LUMINAIRE (HALF CYLINDER) WITH CUT OFF, FINISH AS SELECTED BY ARCHITECT, - PROVIDE WITH INTEGRAL PHOTOCELL BUTTON
XA	LITHONIA NO. LQM-S-W-3-R-120/277-ELN-SD ; WIREGUARDS IN GYM AREAS OR PRIOR APPROVED EQUAL BY EMERGI-LITE, MCPHILBEN, OR PRESCOLITE	MVOLT	CEILING/ WALL	L.E.D.	1 3 WATT	CEILING MOUNTED SINGLE FACE EXIT SIGN. PLASTIC BODY WITH RED LETTERS. PROVIDE WITH SELF-CONTAINED EMERGENCY BATTERY AND DIAGNOSTICS, ARROWS AS SHOWN ON DRAWINGS.
XB	LITHONIA NO. LQM-S-W-3-R-120/277-ELN-SD; WIREGUARDS IN GYM AREAS EELP NO. XE-2-R-W-SD H.E. WILLIAMS NO. EXIT-R-EM-WHT-SDT-D	MVOLT	CEILING	L.E.D.	1 3 WATTS	CEILING MOUNTED DOUBLE FACE EXIT SIGN. PLASTIC BODY WITH RED LETTERS, PROVIDE WITH SELF-CONTAINED EMERGENCY BATTERY AND DIAGNOSTICS, ARROWS AS SHOWN ON DRAWINGS.

NOTES:
1. ARCHITECT RESERVES THE RIGHT TO SELECT ALL COLORS OR MAKE CUSTOM COLOR DURING SHOP DRAWING REVIEW. BID ACCORDINGLY.
2. COORDINATE MOUNTING OF ALL LUMINAIRES WITH ARCHITECTURAL ELEVATIONS PRIOR TO INSTALLATION
3. PROVIDE EMERGENCY BATTERY BALLAST FOR ALL EMERGENCY TYPE FIXTURES CAPABLE OF 90-MINUTES.
4. FOR WARRANTY AND LONG TERM SUPPORT FOR OWNER, ALL LIGHTING FIXTURES SHALL BE PURCHASED THROUGH MANUFACTURER REPRESENTATIVES LOCATED IN THE STATE OF ALABAMA. SUBMITTALS RECEIVED THAT DO NOT COMPLY WITH THIS REQUIREMENT WILL BE REJECTED WITHOUT REVIEW. THE ELECTRICAL CONTRACTOR SHALL BE RESPONSIBLE FOR ANY DELAYS CAUSED BY NON COMPLIANCE WITH THIS REQUIREMENT.
5. ALL INTERIOR LIGHTS SHALL HAVE 4000K TEMPERATURE LAMPS, UNLESS NOTED OTHERWISE.
6. PROVIDE ALL 0-10V DIMMING BRANCH CIRCUITING REQUIRED.

PANEL - RP1C

TYPE: 125 AMP MAIN BREAKER | AIC: 42,000 AMPERES | MOUNTED: RECESSED - NEMA 1 | VOLTAGE: 120/208 VOLTS, 3 PHASE, 4 WIRE

CIRCUIT DIRECTORY	(VA) PER PHASE			AMP	POLE	CIRCUIT NUMBER		AMP	POLE	(VA) PER PHASE			CIRCUIT DIRECTORY
	PHASE A	PHASE B	PHASE C							PHASE A	PHASE B	PHASE C	
LIGHTING	394			20	1	1	2	20	1	400			RECEPTACLES
LIGHTING		746		20	1	3	4	20	1		600		RECEPTACLES
BUSSED SPACE				50	1	5	6	20	1			400	RECEPTACLES
BUSSED SPACE				50	1	7	8	20	1	1,000			HAND DRYER
BUSSED SPACE				50	1	9	10	20	1		1,000		HAND DRYER
BUSSED SPACE				50	1	11	12	20	1			1,000	HAND DRYER
BUSSED SPACE				50	1	13	14	20	1	200			RECEPTACLES
BUSSED SPACE				50	1	15	16	20	1		200		RECEPTACLES
BUSSED SPACE				50	1	17	18	20	1			0	SPARE
BUSSED SPACE				50	1	19	20	20	1	0			SPARE
BUSSED SPACE				50	1	21	22	20	1		0		SPARE
BUSSED SPACE				50	1	23	24	20	1			0	SPARE
BUSSED SPACE				50	1	25	26	20	1	0			SPARE
HP-IG		3,598		50	1	27	28	20	1		0		SPARE
-			3,598		2	29	30	20	1			0	SPARE
DHP-OG	750			20		31	32	20	1	0			SPARE
-		750			2	33	34	20	1		0		SPARE
CCHP-OC1			1,082	20		35	36	20	1			0	SPARE
-	1,082			20	2	37	38	20	1	0			SPARE
CCHP-OC2		1,082		20		39	40	30			2,250		WH-3
-			1,082		2	41	42		2			2,250	-
SUB TOTAL (VA)	2,226	6,176	5,762							1,600	4,050	3,650	SUB TOTAL (VA)

TOTAL LOAD PHASE A: 3,826 (VA)
TOTAL LOAD PHASE B: 10,226 (VA)
TOTAL LOAD PHASE C: 9,412 (VA)
TOTAL LOAD: 23,464 (VA) = 65 AMPS

NOTES:
1. PANELBOARD TO BE BOLT-ON TYPE WITH DOOR-IN-DOOR CONSTRUCTION.
2. PROVIDE ARC FAULT LABEL PER DETAIL.

LUMINAIRE NOTES:

1. ALL LUMINAIRES AND INSTALLATION SHALL BE IN ACCORDANCE WITH NEC, NFPA AND LOCAL CODES. ALL LUMINAIRES SHALL BE UL LISTED AND INSTALLED IN ACCORDANCE WITH THE UL LISTING.
2. LUMINAIRES SHALL BE FURNISHED COMPLETE WITH THE PROPER LAMP BASE OR PIN RECEPTORS, WIRING COMPONENTS, LAMPS, SUPPORTING FRAMES AND DEVICES, ETC., FOR A COMPLETE INSTALLATION.
3. ALL LUMINAIRE DEVICES, COMPONENTS, FITTINGS, SUPPORTS, ETC., SHALL BE COORDINATED TO PROVIDE A COMPLETE UL LISTED INSTALLATION.
4. ALL LUMINAIRES BALLAST, DRIVERS, LAMPS, ETC SHALL BE COMPATIABLE WITH THE LIGHTING CONTROL SYSTEM OR DIMMING CONTROL SYSTEM PROVIDED.
6. SECURE EACH LAY-IN LUMINAIRE AT TWO LOCATIONS TO THE CEILING GRID. PROVIDE BOLTS, SCREWS, RIVETS OR APPROVED CLIPS FOR USE WITH THE TYPE CEILING AND LUMINAIRE INSTALLED.
7. ALL LUMINAIRES IN MECHANICAL AND ELECTRICAL ROOMS SHALL BE INSTALLED TO CLEAR ELECTRICAL EQUIPMENT, DUCT, PIPING, ETC., SUSPEND BELOW OBSTRUCTION WHEN CONFLICTS OCCUR.
8. ALL FLUORESCENT LUMINARIES SHALL BE PROVIDED WITH 3500K COLOR TEMPERATURE LAMPS, UNLESS NOTED OTHERWISE.
9. PROVIDE ALL DUAL SWITCHED LUMINAIRES WITH DUAL BALLAST.
10. LUMINAIRES WITH TWO SUB-SCRIPTS AN "a" AND "b" SHALL HAVE OUTSIDE TWO LAMPS CONTROLLED BY SWITCH OR RELAY POLE "a" AND INSIDE LAMP OR LAMPS CONTROLLED BY SWITCH OR RELAY POLE "b". SIMILARLY FOR OTHER SETS OF SUB-SCRIPTS SUCH AS "c, d, e, f, ETC."
11. ARCHITECT RESERVES THE RIGHT TO SELECT ALL COLORS FOR LUMINAIRES, POLES, MOUNTING ACCESSORIES, ETC. DURING SHOP DRAWING REVIEW.
12. COORDINATE LUMINAIRE MOUNTING WITH ARCHITECTURAL ELEVATIONS PRIOR TO INSTALLATION.
13. PROVIDE ALL EXIT SIGNS WITH DIRECTIONAL ARROWS AS SHOWN ON DRAWINGS.
14. CONTRACTOR SHALL PROVIDE ALL SLOPE ADAPTERS, FLANGE KITS, TRIMS, AND ALL OTHER MOUNTING ACCESSORIES AS NEEDED TO MOUNT EACH LUMINAIRE IN CEILINGS AS SHOWN. COORDINATE WITH ARCHITECTURAL REFLECTED CEILING PLANS.
15. ALL EXIT SIGNS AND LUMINAIRES DESIGNATED AS EMERGENCY SHALL BE PROVIDED WITH A MINIMUM 1100 LUMEN EMERGENCY BATTERY BALLAST CAPABLE OF 90 MINUTES OF ILLUMINATION.

NOTES
1. PAINT CONDUIT NIPPLE, SOCKET AND PIPE FLANGE WITH TWO COATS OF ENAMEL.
2. COMPLETE ASSEMBLY TO BE UL LISTED FOR WET LOCATIONS.
3. PHOTOCELL TO BE MOUNTED FACING NORTH FREE FROM ALL SHADOWS WHICH MIGHT CAUSE PHOTOCELL TO TURN LIGHTS ON EARLY. CONTRACTOR SHALL COORDINATE PROPER MOUNTING LOCATION PRIOR TO INSTALLATION.

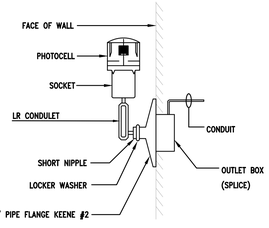

1 / E5.1 DETAIL - INSTALLATION OF PHOTO-CELL
NO SCALE

NOTES:
1. ALL RECESSED LUMINAIRES SHALL BE WIRED FROM A JUNCTION BOX AS SHOWN, INCLUDING LUMINAIRES IN A CONTINUOUS ROW. NO WIRING THRU FIXTURES. NO MORE THAN TWO LUMINAIRES SHALL BE CIRCUITED TO ONE JUNCTION BOX.
2. LUMINAIRE SUPPORT WIRES TO BE A MINUMUM OF #14 GAGE PRE-STRAINED GALVINIZED WIRE ATTACHED AT OPPOSITE CORNERS. LUMINAIRE SHALL BE SUPPORTED TO THE STRUCTURE INDEPENDENT OF THE CEILING GRID.
3. CONDUCTORS IN FLEXIBLE CONDUIT FROM JUNCTION BOX TO LUMINAIRE SHALL CONTAIN AN INSULATED GREEN GROUND WIRE, WITH NEUTRAL AND PHASE CONDUCTORS REQUIRED FOR THE CIRCUITING AND SWITCHING REQUIREMENTS INDICATED.
4. JUNCTION BOXES SHALL BE ACCESSIBLE AND LOCATED WITHIN 1'-6" ABOVE LAY-IN CEILING INSTALLATION. PROVIDE PENDANT ALL-THREAD RODS AND/OR STRUT ASSEMBLIES TO MEET THIS REQUIREMENT WHERE DROP CEILING IS MORE THAN 1'-6" FROM STRUCTURE.
5. CONTRACTOR SHALL INSTALL ALL T-BAR SAFETY CLIPS TO GRID. IF FIXTURE DOES NOT COME WITH GRID SAFETY CLIPS, THEN THE CONTRACTOR SHALL PROVIDE SUPPORT WIRES ON ALL FOUR SIDES.

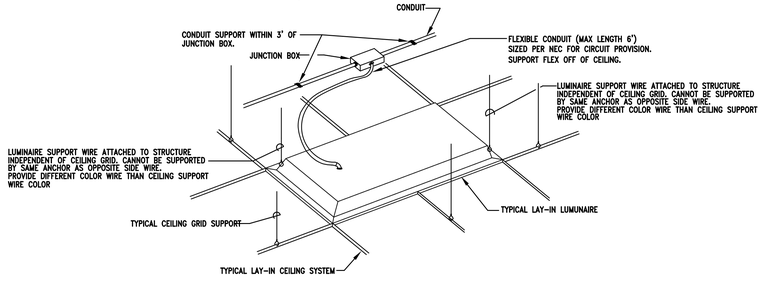

2 / E5.1 DETAIL - TYPICAL LAY-IN LUMINAIRE INSTALLATION
NO SCALE

CLASSROOM ADDITION
FOR
UNION HILL SCHOOL
SOMERVILLE, ALABAMA
FOR THE
MORGAN COUNTY BOARD OF EDUCATION

McKEE and ASSOCIATES
ARCHITECTURE and INTERIOR DESIGN
631 SOUTH HULL STREET MONTGOMERY, ALABAMA 36104 (334) 834-9933

Charles M. Brewer
No. 37959
PROFESSIONAL
10-13-2022
ENGINEER
CHARLES M. BREWER

SHEET TITLE : LUMINAIRE & PANEL SCHEDULE AND NOTES
MCKEE JOB # : 22-134
DRAWN BY : CMB
DATE: 10.13.2022
REVISED DATE:
REVISED DATE:
REVISED DATE:

Gunn & Associates, P.C.
Consulting Engineers
3102 Highway 14, Millbrook, AL 36054, Tel: 334.285.1273
1200 Providence Park, Suite 200, Birmingham, AL 35242, GA#22-065

SHEET NO. : E5.1

SWITCHBOARD MSA (SHUNT TRIP MAIN)

TYPE: 1200 AMP MAIN BREAKER | AIC: 42,000 AMPERES | MOUNTED: SURFACE | VOLTAGE: 120/208 VOLTS, 3 PHASE, 4 WIRE

CIRCUIT DIRECTORY	(VA) PER PHASE A	(VA) PER PHASE B	(VA) PER PHASE C	AMP	POLE	CIRCUIT NUMBER		AMP	POLE	(VA) PER PHASE A	(VA) PER PHASE B	(VA) PER PHASE C	CIRCUIT DIRECTORY
PANEL FP1A	20,031			225		1	2	125		5,157			PANEL RP1A
---		16,829				3	4				4,830		---
---			13,526		3	5	6		3			3,328	---
PANEL FP1B	23,608			600		7	8	125		6,800			PANEL RP1B
-		53,513				9	10				8,800		---
-			41,858		3	11	12		3			7,400	---
PANEL FP2	32,741			400		13	14	125		3,826			PANEL RP1C
-		31,725				15	16				10,226		-
-			32,478		3	17	18		3			9,412	-
SPARE	0			400		19	20	225		12,140			PANEL RP2
-		0				21	22				11,826		-
-			0		3	23	24		3			11,368	-
SPARE	0			225		25	26	125		7,452			ELEVATOR (ST)
-		0				27	28				7,452		-
-			0		3	29	30		3			7,452	-
SPARE	0			225		31	32						BUSSED SPACE
		0				33	34						BUSSED SPACE
-			0		3	35	36						BUSSED SPACE
BUSSED SPACE						37	38						BUSSED SPACE
BUSSED SPACE						39	40						BUSSED SPACE
BUSSED SPACE						41	42						BUSSED SPACE
SUB TOTAL (VA)	76,380	102,067	87,862							35,375	43,134	38,960	

TOTAL LOAD PHASE A: 111,755 (VA)
TOTAL LOAD PHASE B: 145,201 (VA)
TOTAL LOAD PHASE C: 126,822 (VA)
TOTAL LOAD: 383,778 (VA) = 1066 AMPS

NOTES:
1. PANELBOARD SHALL BE UL LISTED FOR SERVICE ENTRANCE.
2. PROVIDE WITH INTEGRAL SPD WITH 120,000 AMPS PER MODE PROTECTION.
3. PROVIDE ARC FAULT LABEL PER DETAIL DETAILS.
4. PROVIDE PANEL WITH NAME PLATE INDICATING AIC RATING. SEE DETAILS.
5. PROVIDE MAIN BREAKER WITH SHUNT TRIP. LOCATE KILL SWITCH ON EXTERIOR IN KNOX BOX LOCATED BY LOCAL AUTHORITY.
6. "ST" PROVIDE SHUNT TRIP CIRCUIT BREAKER.
7. MAIN BREAKER SHALL BE 100% FULLY RATED.

PANEL FP1A

TYPE: 225 AMP MAIN LUGS | AIC: 42,000 AMPERES | MOUNTED: SURFACE | VOLTAGE: 120/208 VOLTS, 3 PHASE, 4 WIRE

CIRCUIT DIRECTORY	(VA) PER PHASE A	(VA) PER PHASE B	(VA) PER PHASE C	AMP	POLE	CIRCUIT NUMBER		AMP	POLE	(VA) PER PHASE A	(VA) PER PHASE B	(VA) PER PHASE C	CIRCUIT DIRECTORY
CCHP-OA	1,082			20		1	2	20		1,196			HP-OB1
-		1,082			2	3	4		2		1,196		-
CCHP-OB			1,082	20		5	6	20				1,196	HP-OB2
-	1,082				2	7	8		2	1,196			-
DHP-OB1		750		20		9	10	20			1,196		HP-OB3
-			750		2	11	12		2			1,196	-
DHP-OB2	750			20		13	14	20		1,500			HP-OA5
-		750			2	15	16				1,500		-
DHP-OA1			750	20		17	18		3			1,500	-
-	750				2	19	20	40		3,095			HP-ID
DHP-OB4		750		20		21	22		2		3,095		-
-			750		2	23	24	20				988	HP-OD
HP-IB1	3,598			50		25	26		2	988			-
-		3,598			2	27	28	40					SPARE
HP-IB2			3,598	50		29	30		2				-
-	3,598				2	31	32	40					SPARE
HP-OE		1,716		30		33	34		2				-
-			1,716		2	35	36	30					SPARE
HP-OF	1,196			20		37	38		2				-
-		1,196			2	39	40	50	1				BUSSED SPACE
BUSSED SPACE				50	1	41	42	50	1				BUSSED SPACE
SUB TOTAL (VA)	12,056	9,842	8,646							7,975	6,987	4,880	

TOTAL LOAD PHASE A: 20,031 (VA)
TOTAL LOAD PHASE B: 16,829 (VA)
TOTAL LOAD PHASE C: 13,526 (VA)
TOTAL LOAD: 50,386 (VA) = 140 AMPS

NOTES:
1. PANELBOARD TO BE BOLT-ON TYPE WITH DOOR-IN-DOOR CONSTRUCTION.
2. PROVIDE ARC FAULT LABEL PER DETAIL DETAILS.

PANEL - RP1A

TYPE: 125 AMP MAIN LUGS | AIC: 42,000 AMPERES | MOUNTED: SURFACE - NEMA 1 | VOLTAGE: 120/208 VOLTS, 3 PHASE, 4 WIRE

CIRCUIT DIRECTORY	(VA) PER PHASE A	(VA) PER PHASE B	(VA) PER PHASE C	AMP	POLE	CIRCUIT NUMBER		AMP	POLE	(VA) PER PHASE A	(VA) PER PHASE B	(VA) PER PHASE C	CIRCUIT DIRECTORY
LIGHTING	737			20	1	1	2	20	1	800			RECEPTACLE
LIGHTING		654		20	1	3	4	20	1		600		RECEPTACLE
VIA LIGHTING THRU C1			928	20	1	5	6	20	1			400	RECEPTACLE
LIGHTING	420			20	1	7	8	20	1	200			RECEPTACLE
SP-1		1,176		20	1	9	10	20	1		1,000		RECEPTACLE
DOOR ACCESS			600	20	1	11	12	20	1			1,000	RECEPTACLE
RECEPTACLES	1,000			20	1	13	14	20	1	800			RECEPTACLE
BUSSED SPACE				50	1	15	16	20	1		1,000		RECEPTACLE
BUSSED SPACE				50	1	17	18	20	1			400	RECEPTACLE
BUSSED SPACE				50	1	19	20	20	1	1,200			RECEPTACLE
BUSSED SPACE				50	1	21	22	30	1		400		ELEVATOR CAB
BUSSED SPACE				50	1	23	24	20	1			0	SPARE
BUSSED SPACE				50	1	25	26	20	1	0			SPARE
BUSSED SPACE				50	1	27	28	20	1		0		SPARE
BUSSED SPACE				50	1	29	30	20	1			0	SPARE
BUSSED SPACE				50	1	31	32	20	1	0			SPARE
BUSSED SPACE				50	1	33	34	50	1				BUSSED SPACE
BUSSED SPACE				50	1	35	36	50	1				BUSSED SPACE
BUSSED SPACE				50	1	37	38	50	1				BUSSED SPACE
BUSSED SPACE				50	1	39	40	50	1				BUSSED SPACE
BUSSED SPACE				50	1	41	42	50	1				BUSSED SPACE
SUB TOTAL (VA)	2,157	1,830	1,528							3,000	3,000	1,800	SUB TOTAL (VA)

TOTAL LOAD PHASE A: 5,157 (VA)
TOTAL LOAD PHASE B: 4,830 (VA)
TOTAL LOAD PHASE C: 3,328 (VA)
TOTAL LOAD: 13,315 (VA) = 37 AMPS

NOTES:
1. PANELBOARD TO BE BOLT-ON TYPE WITH DOOR-IN-DOOR CONSTRUCTION.
2. PROVIDE ARC FAULT LABEL PER DETAIL.

INVERTER

TYPE: 100 AMP MAIN LUGS | AIC: 22,000 AMPERES | MOUNTED: SURFACE (NEMA 1) | VOLTAGE: 120/208 VOLTS, 1 PHASE, 3 WIRE

CIRCUIT DIRECTORY	(VA) PER PHASE A	(VA) PER PHASE B	AMP	POLE	CIRCUIT NUMBER		AMP	POLE	(VA) PER PHASE A	(VA) PER PHASE B	CIRCUIT DIRECTORY
LIGHTING	588	######	20	1	1	2	40		960	######	SAF-1
LIGHTING	######	1,278	20	1	3	4		2	######	960	-
LIGHTING	994	######	20	1	5	6	20	1	350	######	EF-A1,A2,B1,B2,E
LIGHTING	######	1,124	20	1	7	8	20	1	######	0	SPARE
SUB TOTAL (VA)	1,582	2,402							1,310	960	SUB TOTAL (VA)

TOTAL LOAD PHASE A: 2,892 (VA)
TOTAL LOAD PHASE B: 3,362 (VA)
TOTAL LOAD: 6,254 (VA) = 30 AMPS

NOTES:
1. PROVIDE ARC FAULT LABEL PER DETAIL.
2. PANELBOARD SHALL BE BOLT ON TYPE.
3. PROVIDE PANEL WITH NAME PLATE INDICATING AIC RATING.

PANELBOARD NOTES:

1. PANELBOARDS SHALL BE INSTALLED AND ALL CLEARANCES MAINTAINED IN ACCORDANCE WITH THE NEC.
2. ALL PANELBOARDS SHALL BE UL LISTED AND INSTALLED IN ACCORDANCE WITH THAT LISTING.
3. PANELBOARDS SHALL BE FURNISHED COMPLETE WITH THE PROPERLY SIZED ENCLOSURE, INTERNAL HARDWARE, COMPONENTS, SUPPORTING STRUCTURES, ETC., FOR A COMPLETE INSTALLATION.
4. FURNISH EACH PANELBOARD WITH A GROUND BAR BONDED TO THE PANEL ENCLOSURE.
5. THE TERMINATION POINT OF THE FEEDER SERVING EACH ASSEMBLY SHALL BE AT THE NEAREST POINT OF FEEDER ENTRY INTO THE PANEL, SO AS TO MINIMIZE CONDUCTOR FILL IN THE ENCLOSURE. COORDINATE TOP/BOTTOM FEED PANELBOARD PROVISIONS WITH EACH FEEDER INSTALLATION.
6. PROVIDE THE PROPER SIZE AND QUANTITY OF CONDUCTOR TERMINATION POINTS OR LUGS (MULTIPLE LUGS WHEN PARALLEL FEEDERS ARE USED) ON BUSES AND CIRCUIT BREAKERS FOR THE RESPECTIVE SIZE AND NUMBER OF CONDUCTORS INDICATED.
7. ALL FLUSH-MOUNTED PANELBOARDS SHALL BE PROVIDED WITH AT LEAST SIX (6) 3/4" SPARE CONDUITS STUBBED TO ABOVE THE NEAREST ACCESSIBLE CEILING.
8. PANELBOARDS SHALL BE FULLY RATED. SERIES RATED PANELBOARDS WILL NOT BE ACCEPTED.
9. ALL PANELBOARDS SHALL BE CLEARLY MARKED TO COMPLY WITH NEC ARTICLE 110.16 WITH REGARD TO POTENTIAL HAZARDS OF ARC FLASH.
10. ALL PANELBOARDS SHALL BE "DOOR-IN-DOOR" OR "HINGED-FRONT-TRIM" CONSTRUCTION.
11. COMPLY WITH NEC ARTICLE 408.4. PROVIDE A TYPED CIRCUIT DIRECTORY THAT INDICATES WHAT EACH CIRCUIT IS SERVING. FOR LIGHTING AND RECEPTACLE CIRCUITS, INCLUDE THE ROOM NUMBER IN THE CIRCUIT DESCRIPTION ON THE DIRECTORY.
12. EACH PANELBOARD SHALL HAVE A NAMEPLATE AS SHOWN IN DETAIL 1 ON THIS SHEET. ENGINEER WILL NOT PROVIDE FINAL ACCEPTANCE UNTIL THESE NAMEPLATES ARE PROVIDED.
13. MANUFACTURER THAT WILL BE PROVIDING PANELBOARDS ON THIS PROJECT SHALL BE RESPONSIBLE FOR PERFORMING A SHORT CIRCUIT ANALYSIS AND TIME-CURRENT COORDINATION (TCC) STUDY, WHICH DEMONSTRATES THAT THE UPSTREAM OVERCURRENT PROTECTIVE DEVICE NEAREST TO THE FAULT LOCATION WILL OPERATE BEFORE OVERCURRENT PROTECTIVE DEVICES WHICH ARE FURTHER UPSTREAM (I.E. SELECTIVE COORDINATION). INCLUDE COORDINATION STUDY IN THE SHOP DRAWING PACKAGE FOR THE PANELBOARDS FOR REVIEW BY THE ENGINEER OF RECORD. AIC RATINGS MAY BE LOWERED BASED ON STUDY.
14. ALL CIRCUIT BREAKERS 1200 AMPS AND UP SHALL COMPLY WITH NEC ARTICLE 240.87 ARC ENERGY REDUCTION.
15. CONTRACTOR SHALL PROVIDE AN ENGRAVED LABEL WITH THE MAXIMUM AVAILABLE FAULT CURRENT AT THE SERVICE ENTRANCE EQUIPMENT,

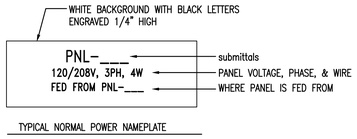

TYPICAL NORMAL POWER NAMEPLATE

1 / E5.2 DETAIL - TYPICAL PANELBOARD NAMEPLATE
NO SCALE



NOTES:
1. PROVIDE SELF-ADHESIVE VINYL LABEL TO AFFIX TO ELECTRICAL EQUIPMENT TO WARN OF ARC FLASH HAZARDS.
2. THE LABEL FORMAT AND TEXT SHALL BE IN ACCORDANCE WITH THE FIGURE.
3. THE LABEL SHALL BE LOCATED ON THE EQUIPMENT TO BE CLEARLY VISIBLE TO QUALIFIED PERSONS BEFORE EXAMINATION, ADJUSTMENT, SERVICING, OR MAINTENANCE OF THE EQUIPMENT.
4. THE SIZE OF THE LABEL SHALL BE:

EQUIPMENT TYPE	HEIGHT	WIDTH
INDOOR	4"	6"
OUTDOOR	4"	6"

2 / E5.2 ARC FLASH WARNING LABELS
NO SCALE

CLASSROOM ADDITION
FOR
UNION HILL SCHOOL
SOMERVILLE, ALABAMA
FOR THE
MORGAN COUNTY BOARD OF EDUCATION

McKEE and ASSOCIATES
ARCHITECTURE and INTERIOR DESIGN
631 SOUTH HULL STREET MONTGOMERY, ALABAMA 36104 (334) 834-9933

LICENSED Charles M. Brewer No. 27591 PROFESSIONAL 10-13-2022 ENGINEER CHARLES M. BREWER

SHEET TITLE : PANELBOARD SCHEDULES AND NOTES

MCKEE JOB # : 22-134

DRAWN BY : CMB

DATE: 10.13.2022

REVISED DATE:

REVISED DATE:

REVISED DATE:

Gunn & Associates, P.C.
Consulting Engineers
3102 Highway 14
Millbrook, AL 36054
Tel: 334.285.1273
1200 Providence Park, Suite 200
Birmingham, AL 35242
GA#22-065

SHEET NO. : E5.2

PANEL FP2

TYPE: 400 AMP MAIN LUGS		AIC: 22,000 AMPERES				MOUNTED: SURFACE			VOLTAGE: 120/208 VOLTS, 3 PHASE, 4 WIRE			
CIRCUIT DIRECTORY	(VA) PER PHASE			AMP	POLE	CIRCUIT NUMBER		AMP	POLE	(VA) PER PHASE			CIRCUIT DIRECTORY
	PHASE A	PHASE B	PHASE C							PHASE A	PHASE B	PHASE C	
HP-IA5	3,633			40		1	2	30		1,500			EUH-A2
-		3,633			2	3	4				1,500		-
-			3,633		3	5	6	50				3,598	HP-IB3
HP-IA6	3,633			40		7	8		2	3,598			-
-		3,633				9	10	60			4,832		HP-IE
-			3,633		3	11	12		2			4,832	-
HP-IA7	3,633			40		13	14	30		3,595			HP-IF
-		3,633				15	16		2		3,595		-
-			3,633		3	17	18	30				2,250	WH-2
HP-IA8	3,633			40		19	20		2	2,250			-
-		3,633				21	22	30			0		SPARE
-			3,633		3	23	24		2			0	-
HP-IA9	3,633			40		25	26	30		0			SPARE
-		3,633				27	28		2		0		-
-			3,633		3	29	30	50	1				BUSSED SPACE
HP-IA10	3,633			40		31	32	50	1				BUSSED SPACE
-		3,633				33	34	50	1				BUSSED SPACE
-			3,633		3	35	36	50	1				BUSSED SPACE
SPARE	0			40		37	38	50	1				BUSSED SPACE
-		0				39	40	50	1				BUSSED SPACE
-			0		3	41	42	50	1				BUSSED SPACE
SUB TOTAL (VA)	21,798	21,798	21,798							10,943	9,927	10,680	

TOTAL LOAD PHASE A:	32,741 (VA)		NOTES:
TOTAL LOAD PHASE B:	31,725 (VA)		1. PANELBOARD TO BE BOLT-ON TYPE WITH DOOR-IN-DOOR CONSTRUCTION.
TOTAL LOAD PHASE C:	32,478 (VA)		2. PROVIDE ARC FAULT LABEL PER DETAIL DETAILS.
TOTAL LOAD:	96,944 (VA) =	269 AMPS	

PANEL - RP2

TYPE: 225 AMP MAIN LUGS		AIC: 42,000 AMPERES				MOUNTED: SURFACE - NEMA 1			VOLTAGE: 120/208 VOLTS, 3 PHASE, 4 WIRE			
CIRCUIT DIRECTORY	(VA) PER PHASE			AMP	POLE	CIRCUIT NUMBER		AMP	POLE	(VA) PER PHASE			CIRCUIT DIRECTORY
	PHASE A	PHASE B	PHASE C							PHASE A	PHASE B	PHASE C	
LIGHTING	600			20	1	1	2	20	1	400			RECEPTACLES
LIGHTING		570		20	1	3	4	20	1		1,000		HAND DRYER
LIGHTING			574	20	1	5	6	20	1			1,000	HAND DRYER
LIGHTING	994			20	1	7	8	20	1	1,000			HAND DRYER
LIGHTING		1,056		20	1	9	10	20	1		1,000		HAND DRYER
LIGHTING			994	20	1	11	12	20	1			600	RECEPTACLES
LIGHTING	346			20	1	13	14	20	1	600			RECEPTACLES
SPARE		0		20	1	15	16	20	1		800		WATER COOLER
SPARE			0	20	1	17	18	20	1			1,000	RECEPTACLES
SPARE	0			20	1	19	20	20	1	800			RECEPTACLES
SPARE		0		20	1	21	22	20	1		800		RECEPTACLES
SPARE			0	20	1	23	24	20	1			1,000	RECEPTACLES
SPARE	0			20	1	25	26	20	1	800			RECEPTACLES
SPARE		0		20	1	27	28	20	1		800		RECEPTACLES
SPARE			0	20	1	29	30	20	1			1,000	RECEPTACLES
SPARE	0			20	1	31	32	20	1	600			RECEPTACLES
SPARE		0		20	1	33	34	20	1		1,000		RECEPTACLES
SPARE			0	20	1	35	36	20	1			1,000	RECEPTACLES
SPARE	0			20	1	37	38	20	1	600			RECEPTACLES
SPARE		0		20	1	39	40	20	1		1,000		RECEPTACLES
SPARE			0	20	1	41	42	20	1			800	WATER COOLER
BUSSED SPACE				50	1	43	44	20	1	1,000			RECEPTACLES
BUSSED SPACE				50	1	45	46	20	1		800		RECEPTACLES
BUSSED SPACE				50	1	47	48	20	1			800	RECEPTACLES
BUSSED SPACE				50	1	49	50	20	1	1,000			RECEPTACLES
BUSSED SPACE				50	1	51	52	20	1		1,200		RECEPTACLES
BUSSED SPACE				50	1	53	54	20	1			800	RECEPTACLES
BUSSED SPACE				50	1	55	56	20	1	1,000			HAND DRYER
BUSSED SPACE				50	1	57	58	20	1		200		RECEPTACLES
BUSSED SPACE				50	1	59	60	20	1			800	RECEPTACLES
BUSSED SPACE				50	1	61	62	20	1	1,000			RECEPTACLES
BUSSED SPACE				50	1	63	64	20	1		600		RECEPTACLES
BUSSED SPACE				50	1	65	66	20	1			600	RECEPTACLES
BUSSED SPACE				50	1	67	68	30		1,000			IT
BUSSED SPACE				50	1	69	70		2		1,000		-
BUSSED SPACE				50	1	71	72	20	1			400	RECEPTACLES
BUSSED SPACE				50	1	73	74	20	1	400			RECEPTACLES
BUSSED SPACE				50	1	75	76	50	1				BUSSED SPACE
BUSSED SPACE				50	1	77	78	50	1				BUSSED SPACE
BUSSED SPACE				50	1	79	80	50	1				BUSSED SPACE
BUSSED SPACE				50	1	81	82	50	1				BUSSED SPACE
BUSSED SPACE				50	1	83	84	50	1				BUSSED SPACE
SUB TOTAL (VA)	1,940	1,626	1,568							10,200	10,200	9,800	SUB TOTAL (VA)

TOTAL LOAD PHASE A:	12,140 (VA)		NOTES:
TOTAL LOAD PHASE B:	11,826 (VA)		1. PANELBOARD TO BE BOLT-ON TYPE WITH DOOR-IN-DOOR CONSTRUCTION.
TOTAL LOAD PHASE C:	11,368 (VA)		2. PROVIDE ARC FAULT LABEL PER DETAIL.
TOTAL LOAD:	35,334 (VA) =	98 AMPS	

PANEL FP1B

TYPE: 600 AMP MAIN LUGS		AIC: 42,000 AMPERES				MOUNTED: SURFACE			VOLTAGE: 120/208 VOLTS, 3 PHASE, 4 WIRE			
CIRCUIT DIRECTORY	(VA) PER PHASE			AMP	POLE	CIRCUIT NUMBER		AMP	POLE	(VA) PER PHASE			CIRCUIT DIRECTORY
	PHASE A	PHASE B	PHASE C							PHASE A	PHASE B	PHASE C	
RP1C	3,826			125		1	2	80		2,892			INVERTER
-		10,226				3	4		2		3,362		-
-			9,412		3	5	6	20				1,082	CCHP-OC3
DHP-OA2	750			20		7	8		2	1,082			-
		750			2	9	10	20			1,082		CCHP-OC4
DHP-OB3			750	20		11	12		2			1,082	-
-	750				2	13	14	60		4,595			HP-IC
EUH-A1		1,500		30		15	16		2		4,595		-
-			1,500		2	17	18						BUSSED SPACE
HP-IA1	3,633			40		19	20	20		1,500			HP-OA1
-		3,633				21	22				1,500		-
-			3,633		3	23	24		3			1,500	-
HP-IA2	3,633			40		25	26	20		1,500			HP-OA2
-		3,633				27	28				1,500		-
-			3,633		3	29	30		3			1,500	-
HP-IA3	3,633			40		31	32	20		1,500			HP-OA3
-		3,633				33	34				1,500		-
-			3,633		3	35	36		3			1,500	-
HP-IA4	3,633			40		37	38	20		1,500			HP-OA4
-		3,633				39	40				1,500		-
-			3,633		3	41	42		3			1,500	-
HO-OA10	1,500			20		43	44	20		1,500			HP-OA6
		1,500				45	46				1,500		-
-			1,500		3	47	48		3			1,500	-
WH-1	2,250			30		49	50	20		1,500			HP-OA7
-		2,250			2	51	52				1,500		-
SPARE			0	30		53	54		3			1,500	-
-	0				2	55	56	20		1,500			HP-OA8
SPARE		0		30		57	58				1,500		-
-			0		2	59	60		3			1,500	-
SPARE	0			40		61	62	20		1,500			HP-OA9
-		0				63	64				1,500		-
-			0		3	65	66		3			1,500	-
BUSSED SPACE				50	1	67	68	30		1,716			HP-OC
BUSSED SPACE				50	1	69	70		2		1,716		-
BUSSED SPACE				50	1	71	72	50	1				BUSSED SPACE
BUSSED SPACE				50	1	73	74	50	1				BUSSED SPACE
BUSSED SPACE				50	1	75	76	50	1				BUSSED SPACE
BUSSED SPACE				50	1	77	78	50	1				BUSSED SPACE
BUSSED SPACE				50	1	79	80	50	1				BUSSED SPACE
BUSSED SPACE				50	1	81	82	50	1				BUSSED SPACE
BUSSED SPACE				50	1	83	84	50	1				BUSSED SPACE
SUB TOTAL (VA)	23,608	30,758	27,694							22,285	22,755	14,164	

TOTAL LOAD PHASE A:	45,893 (VA)		NOTES:
TOTAL LOAD PHASE B:	53,513 (VA)		1. PANELBOARD TO BE BOLT-ON TYPE WITH DOOR-IN-DOOR CONSTRUCTION.
TOTAL LOAD PHASE C:	41,858 (VA)		2. PROVIDE ARC FAULT LABEL PER DETAIL DETAILS.
TOTAL LOAD:	141,264 (VA) =	392 AMPS	

PANEL - RP1B

TYPE: 125 AMP MAIN LUGS		AIC: 42,000 AMPERES				MOUNTED: SURFACE - NEMA 1			VOLTAGE: 120/208 VOLTS, 3 PHASE, 4 WIRE			
CIRCUIT DIRECTORY	(VA) PER PHASE			AMP	POLE	CIRCUIT NUMBER		AMP	POLE	(VA) PER PHASE			CIRCUIT DIRECTORY
	PHASE A	PHASE B	PHASE C							PHASE A	PHASE B	PHASE C	
RECEPTACELS	200			20	1	1	2	20	1				
RECEPTACELS		800		20	1	3	4	20	1				
RECEPTACELS			1,000	20	1	5	6	20	1			600	RECEPTACLES
RECEPTACELS	800			20	1	7	8	20	1	400			RECEPTACLES
RECEPTACELS		800		20	1	9	10	20	1		1,000		HD
RECEPTACELS			800	20	1	11	12	20	1			1,000	HD
RECEPTACELS	1,000			20	1	13	14	20	1	1,000			HD
RECEPTACELS		800		20	1	15	16	20	1		1,000		HD
IT			1,000	30		17	18	20	1				
	1,000				2	19	20	20	1				
IT		1,000		20	1	21	22	20	1		800		EWC
SPARE			0	20	1	23	24	20	1			400	RECEPTACLES
SPARE	0			20	1	25	26	20	1	400			RECEPTACLES
SPARE		0		20	1	27	28	20	1		1,000		HD
SPARE			0	20	1	29	30	20	1			800	EWC
SPARE	0			20	1	31	32	20	1	1,000			RECEPTACLES
BUSSED SPACE				50	1	33	34	20	1		800		RECEPTACLES
BUSSED SPACE				50	1	35	36	20	1			1,000	RECEPTACLES
BUSSED SPACE				50	1	37	38	20	1	1,000			RECEPTACLES
BUSSED SPACE				50	1	39	40	20	1		800		RECEPTACLES
BUSSED SPACE				50	1	41	42	20	1			800	RECEPTACLES
SUB TOTAL (VA)	3,000	3,400	2,800							3,800	5,400	4,600	SUB TOTAL (VA)

TOTAL LOAD PHASE A:	6,800 (VA)		NOTES:
TOTAL LOAD PHASE B:	8,800 (VA)		1. PANELBOARD TO BE BOLT-ON TYPE WITH DOOR-IN-DOOR CONSTRUCTION.
TOTAL LOAD PHASE C:	7,400 (VA)		2. PROVIDE ARC FAULT LABEL PER DETAIL.
TOTAL LOAD:	23,000 (VA) =	64 AMPS	

Gunn & Associates, P.C.
Consulting Engineers
3102 Highway 14
Millbrook, AL 36054
Tel: 334.285.1273
1200 Providence Park, Suite 200
Birmingham, AL 35242
GA#22-065

CLASSROOM ADDITION
FOR
UNION HILL SCHOOL
SOMERVILLE, ALABAMA
FOR THE
MORGAN COUNTY BOARD OF EDUCATION

McKEE and ASSOCIATES
ARCHITECTURE and INTERIOR DESIGN
631 SOUTH HULL STREET MONTGOMERY, ALABAMA 36104 (334) 834-9933

Charles M. Brewer
LICENSED
No. 37959
PROFESSIONAL
10-13-2022
ENGINEER
CHARLES M. BREWER

SHEET TITLE : PANELBOARD SCHEDULES AND NOTES

MCKEE JOB # : 22-134

DRAWN BY : CMB

DATE: 10.13.2022

REVISED DATE:

REVISED DATE:

REVISED DATE:

SHEET NO. : E5.3

FIRE ALARM SYSTEM NOTES:

1. THE FIRE ALARM SYSTEM SHALL BE A COMPLETE SUPERVISED DETECTION AND ALARM SYSTEM. PROVIDE PRIMARY POWER CIRCUITS AND ALARM NOTIFICATION AND INITIATING CIRCUITS IN ACCORDANCE WITH MANUFACTURER'S RECOMMENDATIONS AND SPECIFICATIONS.
2. INSTALLATION SHALL COMPLY WITH THE ADA, NEC, NFPA, AND UL.
3. ALL SYSTEM COMPONENTS, ENCLOSURES, FRAMES, SURGE ARRESTORS, ETC., SHALL BE GROUNDED.
4. THE FIRE ALARM WIRING SYSTEM SHALL BE FURNISHED AND INSTALLED IN ACCORDANCE WITH THE MANUFACTURER'S REQUIREMENTS FOR CLASS "B" SYSTEM AND AS FOLLOWS:
   PRIMARY POWER – 120V AC
   NOTIFICATION APPLIANCE CIRCUITS (NAC) – 24V DC
   SIGNALING LINE CIRCUIT (SLC) – 24V DC
5. ALL EQUIPMENT AND DEVICES SHALL BE INSTALLED IN ACCORDANCE WITH THE MANUFACTURER'S INSTRUCTIONS, APPLICABLE STANDARDS AND ACCESSIBLE FOR VISUAL INSPECTION AND MAINTENANCE. WIRING DIAGRAMS SHALL BE SECURED FROM THE SYSTEM MANUFACTURER AND INSTALLED ACCORDINGLY TO MEET THE SPECIFIED TYPES.
6. A "CERTIFICATE OF COMPLETION" IN ACCORDANCE WITH NFPA 72 SHALL BE FURNISHED PRIOR TO FINAL ACCEPTANCE.
7. CONTRACTOR IS RESPONSIBLE FOR VERIFYING AND PROVIDING ALL FIRE ALARM DEVICE QUANTITIES FROM AUXILIARY DRAWINGS. DO NOT USE THIS RISER FOR DEVICE COUNTS.
8. THE CONTRACTOR OR THEIR FIRE ALARM SYSTEM VENDOR SHALL PROVIDE AUDIBILITY CALCULATIONS INDICATING COMPLIANCE WITH ALL APPLICABLE PROVISIONS OF NFPA 72 AND THE IBC. THE CONTRACT DRAWINGS INDICATE A MINIMUM DESIGN REQUIRED TO COMPLY WITH APPLICABLE CODES. HOWEVER, SINCE DEVICES VARY FROM MANUFACTURER TO MANUFACTURER THE CONTRACTOR SHALL BE RESPONSIBLE FOR FURNISHING ANY/ALL ADDITIONAL DEVICES AS REQUIRED TO PROVIDE AUDIBILITY AND VISIBILITY LEVELS THAT COMPLY WITH APPLICABLE SECTIONS OF NFPA 72 AND IBC.
9. PROVIDE ADDITIONAL 100% SPARE CAPACITY IN FIRE ALARM CONTROL PANEL FOR FUTURE USE.
10. PROVIDE EMERGENCY BATTERIES CAPABLE OF RUNNING THE COMPLETE FIRE ALARM SYSTEM IN ALARM MODE, PER NFPA GUIDELINES AT A MINUMUM. BATTERIES SHALL BE SIZED TO HANDLE THE FUTURE CAPACITY.
11. THE FIRE ALARM SYSTEM SHALL BE MONITORED BY AN APPROVED SUPERVISING STATION IN ACCORDANCE WITH NFPA 72. PROVIDE IP DIALER FOR MONITORING OF THE FIRE ALARM SYSTEM.
12. ALL WIRING TO BE IN CONDUIT SIZED IN ACCORDANCE WITH NEC WITH A MINIMUM SIZE OF 3/4". PROVIDE ALL FIRE ALARM CONDUIT WITH 3" WIDE RED STRIPE EVERY 10' FOR LENGTH OF RUN.
13. PROVIDE ALL FIRE ALARM JUNCTION BOXES WITH RED COVER, STENCIL THE LETTERS "FA" IN 2" HIGH LETTERS ON EACH BOX COVER.
14. FIRE ALARM SYSTEM PROVIDER IS RESPONSIBLE FOR PROVIDING SIGNAL LINE BOOSTERS AS REQUIRED FOR SYSTEM TO FUNCTION PROPERLY.
15. IN ADDITION TO THE DEVICES INDICATED ON THE PLANS THE CONTRACTOR SHALL PROVIDE A SMOKE DETECTOR LOCATED WITHIN 5 FEET OF EACH FIRE ALARM NOTIFICATION APPLIANCE PANEL.
16. CONTRACTOR SHALL PROVIDE ALL ADDITIONAL 120 VOLT CIRCUITS NEEDED TO MAKE THE FIRE ALARM SYSTEM A COMPLETE FUNCTIONAL SYSTEM.
17. PROVIDE VOICE EVACUATION PER IBC SECTION 907 AND ALL SECTIONS OF THE INTERNATIONAL FIRE CODE.
18. "CLG" DENOTES A CEILING MOUNTED DEVICE.
19. SEE STANDARD MOUNTING HEIGHT INSTRUCTIONS ON DETAILS (2) THIS SHEET.
20. CONTRACTOR OR THEIR FIRE ALARM SYSTEM VENDOR SHALL PROVIDE SMOKE DETECTOR REPORTS AT THE FINAL TESTING OF THE FIRE ALARM SYSTEM TO SHOW THAT ALL SMOKE DETECTORS ARE LESS THAN 10% DIRTY. ANY SMOKE DETECTOR GREATER THAN 10% DIRTY SHALL BE CLEANED OR REPLACED UNTIL VALUE IS LESS THAN 10%.

FIRE ALARM MOUNTING HEIGHTS/INSTRUCTIONS NOTES:

1. MOUNT FIRE ALARM ENCLOSURE WITH THE TOP OF THE CABINET 72" ABOVE THE FINISHED FLOOR OR CENTER THE CABINET AT 63", WHICHEVER IS LOWER.
2. MOUNT ANNUNCIATOR WITH THE TOP OF THE PANEL 72" ABOVE THE FINISHED FLOOR OR CENTER OF THE PANEL AT 63", WHICHEVER IS LOWER. FLUSH MOUNT ANNUNCIATOR UNLESS OTHERWISE NOTED.
3. REMOTE POWER SUPPLIES AND AUXILIARY FIRE ALARM PANELS. LOCATE THE PANEL OR CABINET WITH THE TOP OF THE PANEL 72" ABOVE THE FINISHED FLOOR OR CENTER THE PANEL AT 63", WHICHEVER IS LOWER. DO NOT LOCATE THESE PANELS ABOVE CEILINGS OR WHERE INACCESSIBLE BY A PERSON STANDING ON THE FINISHED FLOOR OF THE SPACE.
4. MOUNT STATIONS SO THAT THEIR OPERATING HANDLES ARE BETWEEN 42" AND 48" ABOVE THE FINISHED FLOOR. DO NOT USE BRICK OR BLOCK COURSES AS YOUR ONLY GUIDE. CUT BRICK OR BLOCK TO ACHIEVE PROPER HANDLE HEIGHT.
5. ALL WALL MOUNTED AUDIO/VISUAL DEVICES SHALL BE MOUNTED SO THE ENTIRE LENS IS BETWEEN 80" AND 96" ABOVE THE FINISHED FLOOR. WHERE LOW CEILING HEIGHTS DO NOT PERMIT MOUNTING AT A MINIMUM OF 80" AFF, VISIBLE APPLIANCES SHALL BE MOUNTED WITHIN 6" OF THE CEILING. DO NOT USE BRICK OR BLOCK COURSES AS YOUR ONLY GUIDE. CUT BRICK OR BLOCK TO ACHIEVE PROPER LENS HEIGHT.
6. WEATHER PROOF APPLIANCES INSTALLED OUTDOORS SHALL BE UL LISTED FOR OUTDOOR USE. MOUNT SO THE ENTIRE LENS IS BETWEEN 80" AND 96" ABOVE FINISHED FLOOR. FOR WEATHERPROOF APPLIANCES MOUNTED AT FIRE DEPARTMENT CONNECTION (FDC), COORDINATE WITH LOCAL AUTHORITY HAVING JURISDICTION PRIOR TO ROUGH-IN FOR MOUNTING HEIGHT.
7. SMOKE AND HEAT DETECTOR HEADS SHALL NOT BE INSTALLED UNTIL AFTER CONSTRUCTION CLEAN-UP IS COMPLETED. IF DETECTOR HEADS ARE INSTALLED PRIOR TO CONSTRUCTION CLEAN-UP, PROTECTIVE COVERS MUST BE IN PLACE TO PROTECT DETECTOR HEADS FROM PARTICULATE DAMAGE. DETECTORS LOCATED ON THE WALL SHALL HAVE THE TOP OF THE DETECTOR AT LEAST 4" AND NOT MORE THAN 12" BELOW THE CEILING. INSTALL SMOKE DETECTORS NO CLOSER THAN 3 FEET FROM AIR HANDLING SUPPLY AIR DIFFUSERS OR RETURN AIR OPENINGS. LOCATE DETECTORS NO CLOSER THAN 12" FROM ANY PART OF A LIGHTING FIXTURE.
8. DUCT SMOKE DETECTOR HEADS SHALL NOT BE INSTALLED UNTIL AFTER CONSTRUCTION CLEAN-UP IS COMPLETED. DETECTOR HEADS INSTALLED PRIOR TO CONSTRUCTION CLEAN-UP SHALL BE REPLACED. DUCT DETECTORS ARE TO BE PROVIDED BY THE FIRE ALARM CONTRACTOR AND INSTALLED BY THE MECHANICAL CONTRACTOR.
9. ADDRESSABLE MODULES SHALL BE INSTALLED LESS THAN 3-FEET FROM THE DEVICE BEING CONTROLLED OR MONITORED. ORIENT THE DEVICE MOUNTING FOR BEST MAINTENANCE ACCESS. LABEL ALL ADDRESSABLE MODULES AS TO THEIR FUNCTION.

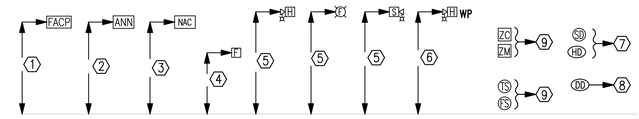

2 / E6.1 STANDARD MOUNTING HEIGHTS/INSTRUCTIONS
NO SCALE

EMERGENCY RADIO SYSTEM:

PROVIDE A TWO-WAY EMERGENCY RADIO COMMUNICATION ENHANCEMENT SYSTEM UTILIZING A BI-DIRECTIONAL AMPLIFIER (BDA) SOLUTION AS REQUIRED BY THE AHJ. THE BDA SOLUTION MUST MEET ALL OF THE REQUIREMENTS OF NFPA, IFC AND IBC WHICH INCLUDE REQUIREMENTS FOR THE INSTALLATION, PERFORMANCE AND STRENGTH OF EMERGENCY RADIO COMMUNICATION ENHANCEMENT SYSTEMS (ERCES) FOR COMMERCIAL FACILITIES. MOST SPECIFICALLY THE INTERNATIONAL FIRE CODE (IFC-SECTION 510), NFPA 1221 (2016 EDITION) AND IBC 201 (SECTION 916).

THE INSTALLATION COMPANY OF THE BDA SOLUTION SHALL MAINTAIN A FCC LICENSE OR BE 'FACTORY TRAINED' BY THE BDA SOLUTION MANUFACTURER. PROOF OF LICENSE SHALL BE PROVIDED ALONG WITH BDA SOLUTION (SPECIFICATION SHEETS, ETC.) AND BUILDING SPECIFIC BDA SOLUTION DESIGN, IN YOUR FIRE ALARM SUBMITTAL PACKAGE TO THE FIRE ALARM ENGINEER OF RECORD FOR REVIEW AND APPROVAL.

THE BDA SOLUTION MUST BE SUPERVISED BY THE BUIDLING FIRE ALARM SYSTEM AND REPORT SIGNALS VIA THE FIRE ALARM SYSTEM TO THE FIRE ALARM CENTRAL STATION MONITORING COMPANY IF A TROUBLE WITH THE BDA SOLUTION EXISTS. CERTIFICATION OF COMPLETION AND TESTING (INCLUDING TEST RESULTS) OF BDA SOLUTION SHALL BE PROVIDED IN CONJUCTION WITH FIRE ALARM COMPLETION CERTIFICATION.

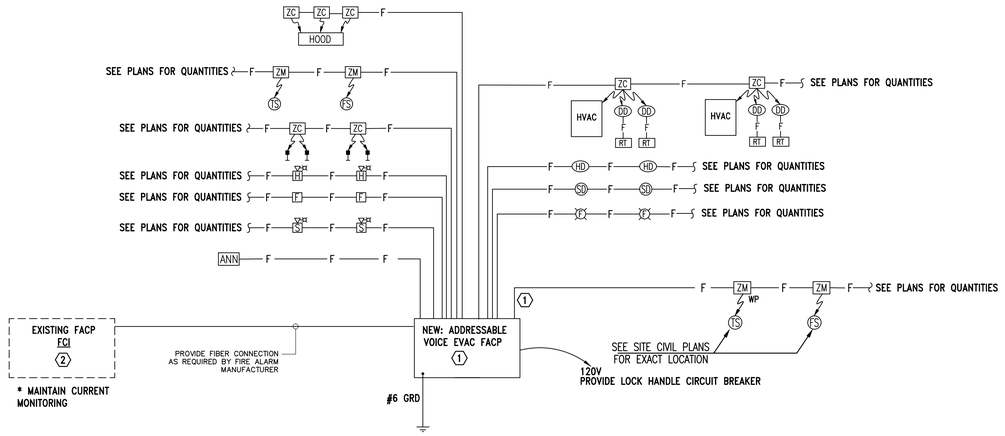

2 / E6.1 FIRE ALARM RISER DIAGRAM - ELEMENTARY SCHOOL
NO SCALE

SHEET NOTES:

1. PROVIDE SURGE SUPPRESSION ON ON ALL INCOMING AND OUTGOING CABLES WHERE THEY ENTER OR EXIT THE FACILITY. SURGE SUPPRESSION WILL BE REQUIRED FOR EACH CABLE.
2. CONNECT NEW FIRE ALARM SYSTEM TO EXISTING FIRE ALARM CONTROL PANEL AND HAVE SYSTEM FUNCTION AS ONE ADDRESSABLE SYSTEM.

CLASSROOM ADDITION
FOR
UNION HILL SCHOOL
SOMERVILLE, ALABAMA
FOR THE
MORGAN COUNTY BOARD OF EDUCATION

McKEE and ASSOCIATES
ARCHITECTURE and INTERIOR DESIGN
631 SOUTH HULL STREET MONTGOMERY, ALABAMA 36104 (334) 834-9933

LICENSED PROFESSIONAL ENGINEER
No. 37959
10-13-2022
CHARLES M. BREWER

SHEET TITLE : FIRE ALARM RISER AND NOTES

MCKEE JOB # : 22-134

DRAWN BY : CMB

DATE: 10.13.2022

REVISED DATE:

REVISED DATE:

REVISED DATE:

Gunn & Associates, P.C.
Consulting Engineers
3102 Highway 14
Millbrook, AL 36054
Tel: 334.285.1273
1200 Providence Park, Suite 200
Birmingham, AL 35242
GA#22-065

SHEET NO. : E6.1

RISER DIAGRAMS – ALUMINUM WIRE WILL BE ALLOWED FOR SERVICE ENTRANCE, PANELBOARD AND TRANSFORMER FEEDERS OF EQUAL AMPACITY FOR CONDUCTORS LARGER THAN #1 CABLE SIZE. ALL FEEDERS ARE CURRENTLY SIZED FOR COPPER. IT WILL BE THE CONTRACTOR'S RESPONSIBILITY TO UPSIZE CONDUCTORS AND CONDUITS AS NEEDED FOR AMPACITY AND VOLTAGE DROP. DURING THE SUBMITTAL PHASE PROVIDE UPDATED ALUMINUM FEEDER SIZES FOR APPROVAL. COORDINATE WITH ALABAMA POWER FOR EXTRA RUNS OF CONDUCTORS TO THE TRANSFORMER. COMPRESSION LUGS WILL BE REQUIRED FOR ALL TERMINATION OF ALUMINUM WIRE WITH ANTI-OXIDANT COMPOUND.

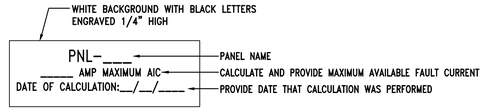

TYPICAL SERVICE ENTRANCE FAULT CURRENT NAMEPLATE

1 / E7.1 DETAIL - SERVICE ENTRANCE FAULT CURRENT NAMEPLATE

NO SCALE

POWER RISER DIAGRAM NOTES:

1. INSTALLATION AND CONNECTION OF ALL DEVICES SHALL BE IN ACCORDANCE WITH NEC, MANUFACTURER'S RECOMMENDATIONS, AND STATE AND LOCAL CODES.
2. CONTRACTOR IS RESPONSIBLE FOR THE CONNECTING, INSTALLATION, AND MARKING OF ALL POWER FEEDER CONDUCTORS FOR THE PROPER PHASE SEQUENCE AND LOADING . CONTRACTOR SHALL TEST EACH FEEDER AND EQUIPMENT FEEDERS WITH A PHASE METER PRIOR TO CONNECTING LOADS.
3. THE CONTRACTOR IS RESPONSIBLE FOR COORDINATING AND VERIFYING WITH ALL DIVISIONS THE ACTUAL NAMEPLATE DATA OF ALL EQUIPMENT AND DEVICES SUPPLIED ON THIS PROJECT PRIOR TO BID. CONTRACTOR SHALL THEN PROVIDE THE PROPERLY SIZED OVERCURRENT DEVICES (CIRCUIT BREAKERS, CONDUCTORS, DISCONNECTS, FUSES, ETC.) TO PROPERLY PROTECT THE EQUIPMENT PER THE NEC. ENGINEER'S DESIGN BASED ON DATA GIVEN TO HIM BY DESIGNERS OF OTHER DIVISIONS, ACTUAL NAMEPLATE DATA COULD DIFFER.
4. SEAL ALL CONDUITS FROM THE EXTERIOR WITH A SEALING COMPOUND, ONCE ALL CABLING HAS BEEN INSTALLED.
5. PROVIDE 4" CONCRETE HOUSEKEEPING PAD WITH 1" CHAMFER FOR ALL FLOOR MOUNTED TRANSFORMERS AND SWITCHBOARDS.
6. COORDINATE WITH GROUNDING DETAILS ON SHEET E7.02 FOR ALL THE DIFFERENT TYPE GROUNDING REQUIREMENTS.
7. ALL UNDERGROUND SECONDARY FEEDERS SHALL BE A MINIMUM OF 36" BELOW GRADE TO THE TOP OF THE DUCT BANK.
8. ALL UNDERGROUND PRIMARY FEEDERS SHALL BE A MINIMUM OF 48" BELOW GRADE TO THE TOP OF THE CONDUIT.
9. CONTRACTOR SHALL PROVIDE A FULL SIZE COPY OF THE AS-BUILT POWER RISER DIAGRAM FRAMED BEHIND PLEXIGLASS SCREWED TO THE WALL NEAR MAIN SERVICE PANEL.

NOTES:

1. CONTRACTOR SHALL CALCULATE AND PROVIDE NAMEPLATE ON THE SERVICE ENTRANCE EQUIPMENT THAT INDICATES THE MAXIMUM AVAILABLE FAULT CURRENT AND THE DATE THE CALCUALTION WAS PERFORMED. SEE NAMEPLATE REQUIREMENTS BELOW.

INVERTER					
MARK	KVA	VOLTAGE		BKRS	DESCRIPTION
		PRIMARY	SECONDARY		
INV	8.5KW	120/208V., 1PH., 3W.	120/208V., 1PH., 3W.	(6) 20A/1P (1) 40A/2P	CENTRAL BATTERY INVERTER BY CONTROLLED POWER: NO. ELU-LLX-8.5KW-ON10 (301556) RUN TIME 180 MINUTES EMERGI-LITE AND DUAL-LITE ARE EQUAL.

* INVERTER SIZE SHALL BE CALCULATED USING THE FOLLOWING INFORMATION.
LIGHTS: 3,200 WATTS
FANS: (1) 1.0HP
(5) FRACTIONAL HP
SYSTEM IS DESIGNED AROUND CONTROLLED POWER. EQUAL MANUFACTURERS MUST MEET PHYSICAL EQUIPMENT SIZE AS SHOWN ON DRAWINGS.

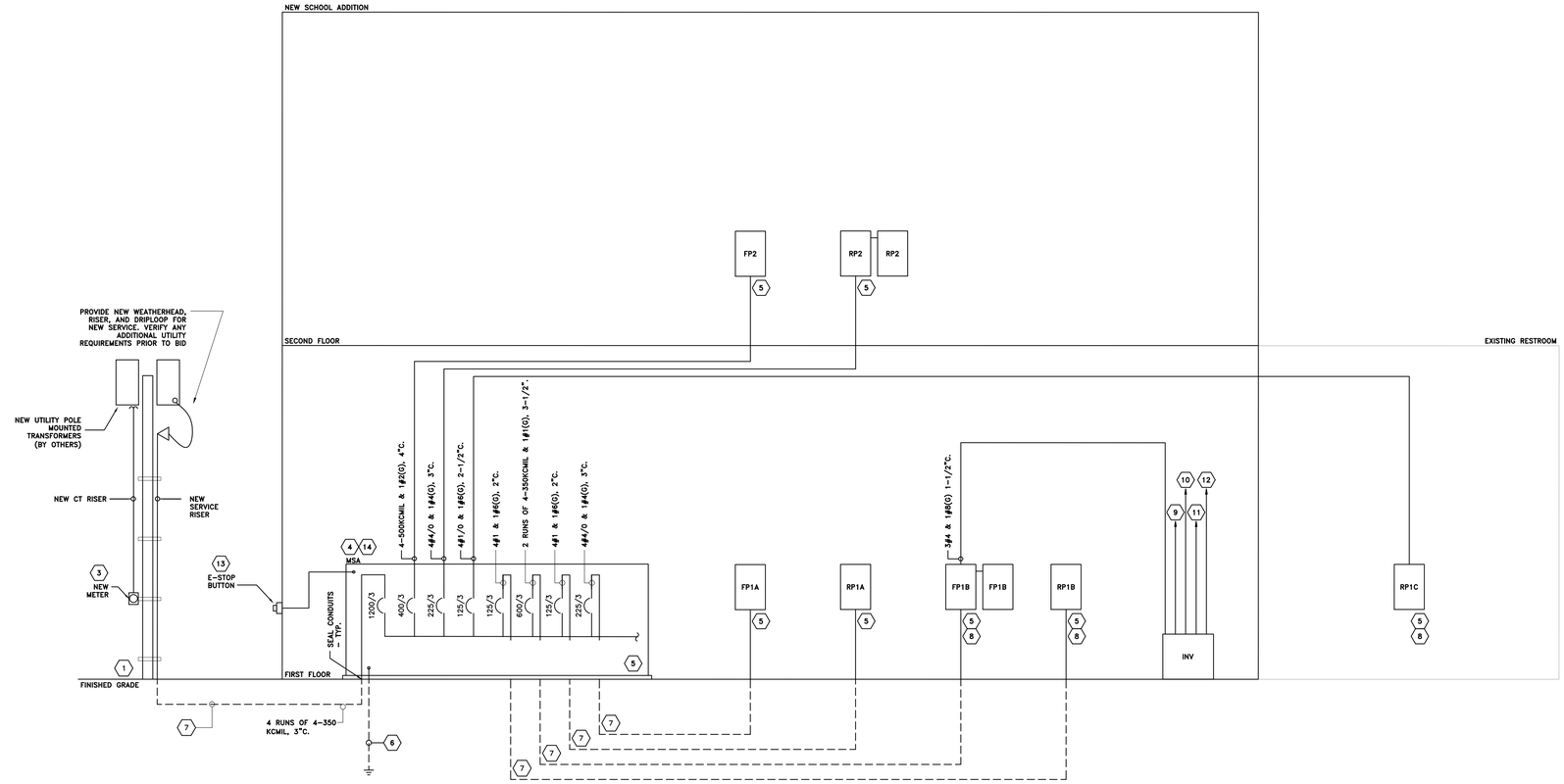

SHEET NOTES:

1. NEW POLE MOUNTED SERVICE. ELECTRICAL CONTRACTOR TO COORDINATE SHUTDOWNS AND ANY ADDITIONAL ITEMS WITH UTILITY. COORDINATE WITH SCHOOL OFFICIALS A MIN. OF 2 WEEKS PRIOR FOR ALL OUTAGES REQUIRED.
2. INSTALL UNDERGROUND PRIMARY CONDUITS AS INDICATED ON THE SITE ELECTRICAL PLAN. COORDINATE WITH UTILITY COMPANY AND ADJUST THE NUMBER AND QUANTITY OF CONDUITS REQUIRED BY THE LOCAL UTILITY COMPANY.
3. METER PROVIDE BY UTILITY COMPANY. ELECTRICAL CONTRACTOR TO PROVIDE METER CONDUIT PER UTILITY COMPANY SPECIFICATIONS.
4. MSA – 1000 AMP, 120/208V, 3PH., 4W., SWITCHBOARD, SHUNT TRIP MAIN CIRCUIT BREAKER, 100% RATED, INTEGRAL SPD, RATED FOR SERVICE ENTRANCE EQUIPMENT, 42,000 AIC.
5. SEE PANELBOARD SCHEDULE FOR CIRCUIT BREAKER PROVISIONS.
6. PROVIDE GROUNDING PER DETAIL ON SHEET E7.2.
7. FEEDER CIRCUIT SHALL BE INSTALLED UNDERGROUND BELOW SLAB.
8. FEEDERS FOR PANELBOARDS IN STORM SHELTER SHALL BE FED FROM BELOW. NO FEEDER CONDUITS SHALL PENETRATE SHELTER WALLS.
9. LIGHTING IN STORM SHELTER SHALL BE CONNECTED TO INVERTER. SEE SHEET E2.1 FOR ADDITIONAL INFORMATION.
10. VENTILATION FAN SAF-1, EF-A1, EF-A2, EF-B1, EF-B2, & EF-E SHALL BE CONNECTED TO THE INVERTER. SEE EQUIPMENT SCHEDULE E3.5 FOR ADDITIONAL INFORMATION AND REQUIREMENTS.
11. STORM SHELTER PLUMBING SHUTOFF VALVE. SEE PLUMBING FOR LOCATION.
12. RELAY CONTACT FOR SAF-1
13. PROVIDE E-STOP BUTTON WITH OUTDOOR ENCLOSURE CIRCUITED TO MAIN BREAKER SHUNT TRIP, 120V. 2#12 & 1#12(G), 3/4"C. VERIFY LOCATION ON EXTERIOR BUILDING WITH LOCAL FIRST RESPONDER AUTHORITY.
STI: #SS2274PO-EN
COVER: "IN CASE OF EMERGENCY"
"LIFT COVER – PRESS BUTTON"
BUTTON: "EMERGENCY"
"POWER OFF"
14. SEE SERVICE ENTRANCE NAMEPLATE DETAIL THIS SHEET.

4 / E7.1 RISER DIAGRAM POWER DISTRIBUTION - NEW BUILDING

NO SCALE

CLASSROOM ADDITION
FOR
UNION HILL SCHOOL
SOMERVILLE, ALABAMA
FOR THE
MORGAN COUNTY BOARD OF EDUCATION

McKEE and ASSOCIATES
ARCHITECTURE and INTERIOR DESIGN
631 SOUTH HULL STREET MONTGOMERY, ALABAMA 36104 (334) 834-9933

LICENSED PROFESSIONAL ENGINEER
No. 37959
10-13-2022
CHARLES M. BREWER

SHEET TITLE : RISER DIAGRAM AND NOTES

MCKEE JOB # : 22-134

DRAWN BY : CMB

DATE: 10.13.2022

REVISED DATE:

REVISED DATE:

REVISED DATE:

Gunn & Associates, P.C.
Consulting Engineers
3102 Highway 14, Millbrook, AL 36054, Tel: 334.285.1273
1200 Providence Park, Suite 200, Birmingham, AL 35242, GA#22-065

SHEET NO. : E7.1

NOTES
1. ALL GROUND ELECTRODE CONDUCTORS, SYSTEM BONDING CONDUCTORS, ETC., RUN SEPARATELY SHALL BE PROTECTED BY A CONDUIT SYSTEM.
2. ALL SYSTEM GROUNDING OR BONDING CONDUCTORS SHALL GENERALLY BE ENCLOSED BY A GRC CONDUIT. PROVIDE GROUND BUSHINGS ON EACH END AND BOND CONDUCTORS TO RACEWAY SYSTEM.
3. SYSTEM BONDING CONDUCTORS THAT PENETRATE CONCRETE SLABS SHALL BE ENCLOSED BY A PVC CONDUIT. PROVIDE BELL END FITTING ON EACH END AND SEAL. THOSE TERMINATING AT A STUB-UP SHALL BE FLUSH WITH FLOOR.

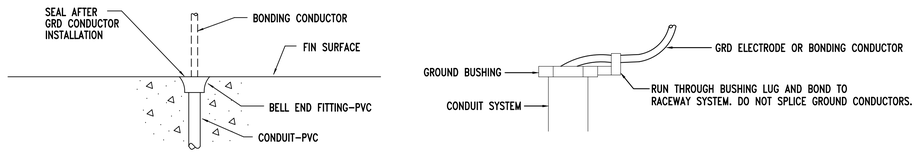

THROUGH CONCRETE — SURFACE MOUNTED

2 E7.2 DETAIL - TYPICAL GROUND CONDUCTOR IN CONDUIT SYSTEM
NO SCALE

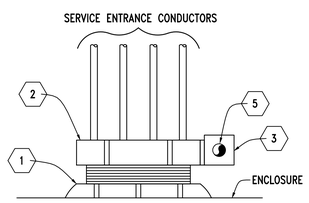

FOR SERVICE ENTRANCE CONDUITS

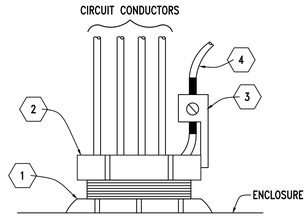

FOR FEEDER AND/OR BRANCH CIRCUITS

DETAIL NOTES
1. LOCK-NUT ASSEMBLIES
2. METAL GROUNDING BUSHING
3. COPPER GROUND LUG
4. COPPER GROUND CONDUCTOR. REMOVE INSULATION AT BUSHING, RUN THROUGH BUSHING LUG AND BOND TO RACEWAY SYSTEM. DO NOT SPLICE OR TAP.
5. CONTINOUS COPPER GROUND CONDUCTOR FROM GROUND BUS THROUGH EACH BUSHING. DO NOT SPLICE OR TAP.

3 E7.2 DETAIL - TYPICAL GROUND BUSHING INSTALLATION
NO SCALE

NOTES
1. GROUNDING ELECTRODE SYSTEM SHALL BE IN ACCORDANCE WITH NEC ARTICLE 250
2. GROUNDING ELECTRODE CONDUCTORS SHALL BE CONTINUOUS AND NOT SPLICED.
3. GROUNDING ELECTRODE CONDUCTORS SHALL BE ENCLOSED FULL LENGTH GALVANIZED RIGID CONDUIT AS INDICATED.
4. GROUNDING ELECTRODE CONDUCTORS SHALL BE BARE COPPER.
5. ALL BUSHINGS INSTALLED IN DIRECT CONTACT WITH EARTH SHALL BE APPROVED FOR THE PURPOSE.
6. GROUND CONNECTIONS BELOW GRADE SHALL BE EXOTHERMICALLY WELDED TYPE.
7. PROVIDE GROUNDING JUMPERS FROM COLD WATER PIPING TO HOT WATER PIPING AT EACH WATER HEATER. PROVIDE GROUNDING JUMPERS AT EACH INSULATED JOINT OR ANY PLACE WHERE GROUND IS BROKEN TO MAINTAIN INTEGRITY OF GROUNDING SYSTEM.

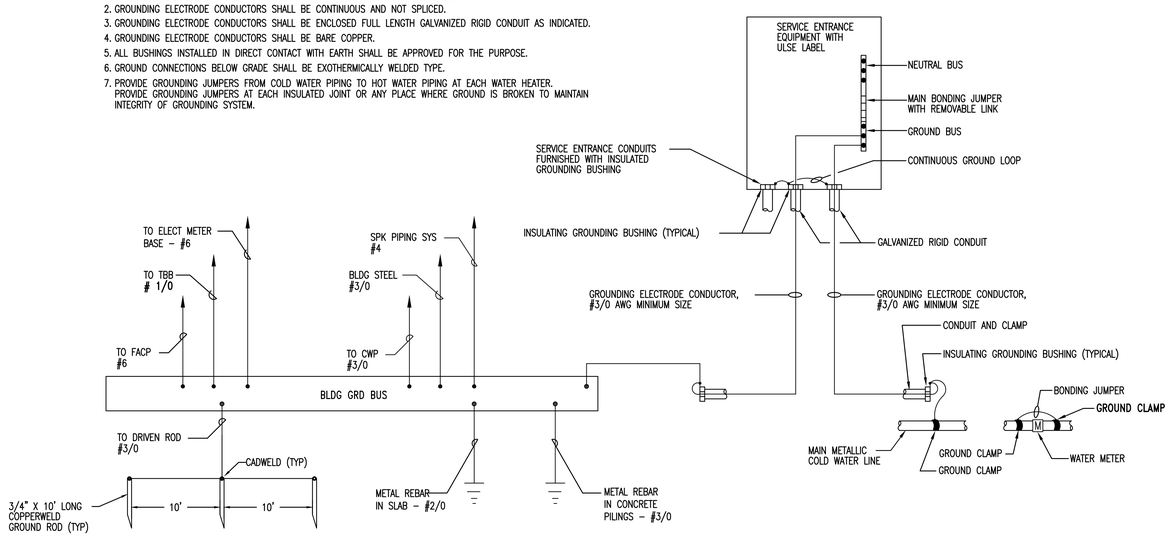

4 E7.2 DETAIL - SERVICE ENTRANCE GROUNDING INSTALLATION
NO SCALE

GROUNDING AND BONDING INSTALLATION NOTES
1. ALL GROUNDING AND BONDING SHALL BE IN ACCORDANCE WITH THE NEC, NESC, IEEE, ANSI AND UL STANDARDS.
2. ALL DIMENSIONING INDICATED IN THESE DOCUMENTS ARE FOR REFERENCE AND COORDINATION PURPOSES ONLY. THE CONTRACTOR IS RESPONSIBLE FOR VERIFYING ALL DIMENSIONS IN THE FIELD.
3. THE PURPOSE OF THE GROUNDING AND BONDING SYSTEM IS TO ESTABLISH ALL EQUIPMENT ENCLOSURES, NON-CURRENT CARRYING METALLIC PORTIONS OF THE ELECTRICAL DISTRIBUTION SYSTEM, METAL PIPING, METAL BUILDING FRAME, ETC., AT A ZERO POTENTIAL RELATIVE TO THE EARTH GROUND AND PROVIDE FOR A SAFE, LOW IMPEDANCE RETURN PATH FOR GROUND-FAULT CURRENT. THIS SHALL BE ACCOMPLISHED IN THE FOLLOWING MANNER:
   a. PROVIDE A SOLIDLY GROUNDED SECONDARY SYSTEM.
   b. INTER-CONNECT ALL GROUND BUSES AND POINTS IN THE SYSTEM WITH A COPPER GRD CONDUCTOR (BUS) SYSTEM.
   c. ALL METALLIC RACEWAYS SHALL BE UL APPROVED AND MADE-UP TIGHT AT ALL COUPLINGS AND TERMINATIONS.
   d. ALL GROUND CONDUCTORS IN CIRCUITS SHALL BE CONTAINED WITHIN THE SAME RACEWAY AS CURRENT CARRYING CONDUCTORS.
   e. ALL SPLICES AND TERMINATIONS SHALL BE MADE TIGHT AND AS SUCH TO PROVIDE LOW IMPEDANCE AND SHALL HAVE THE SAME SHORT-TIME CURRENT-CARRYING CAPABILITY AS THE CONDUCTOR IT IS CONNECTED TO.
   f. ALL GRD ELECTRODES OR BONDING CONDUCTORS INSTALLED ALONE WITHIN A RACEWAY SHALL UTILIZE GRC WITH GROUNDING BUSHINGS AT EACH END. THIS GROUND CONDUCTOR SHALL LOOP THROUGH THE BUSHING LUG PRIOR TO TERMINATION.

DIMENSION BLOCK		
REF	ENGLISH	SI
A	1"	25.4mm
B	2"	50.8mm
C	2 1/2"	63.5mm
D	3"	76.2mm
E	1'-6"	.4572m

GROUND BUS NOTES
1. GROUND BUS INSTALLATION SHALL BE IN ACCORDANCE WITH THIS DETAIL AND AS INDICATED ON THE DRAWINGS.

KEYED NOTES
1. 1/2" (12.7mm) X 1 1/2" (38.1mm) SILICON-BRONZE MACHINE BOLT & SILICON-BRONZE WASHER
2. 1/2" (12.7mm) EXPANSION ANCHOR
3. 9/16"ø (14.2875mm) HOLE IN BAR
4. DRILLED DOUBLE CONNECTOR HOLES
5. FLAT, TWO-HOLE CU CABLE CONNECTOR #6 TO #2 (DOUBLE LUGS) #1 TO #4/0 (SINGLE LUGS ONLY)
6. 4" (101.6mm) WIDE, 1/4" (6.35mm) DEEP COPPER BUS BAR.
7. LENGTH AS REQUIRED BY NUMBER OF CONDUCTOR CONNECTIONS OR AS SPECIFICALLY INDICATED. PROVIDE INTERMEDIATE WALL SUPPORTS AS REQUIRED.
8. TYP CU GRD CONDUCTOR CONNECTION
9. DESCRIPTION TAG. STATE SIZE OF CONDUCTOR AND TO WHAT IT IS CONNECTED TO.
10. TYP GRD CONNECTION FROM BELOW. SEE APPLICABLE DETAILS FOR SLAB PENETRATIONS.
11. TYP GRD CONNECTION FROM ABOVE. SEE APPLICABLE DETAILS FOR GRC INSTALLATIONS.
12. INSULATED NON-CONDUCTIVE SPACER

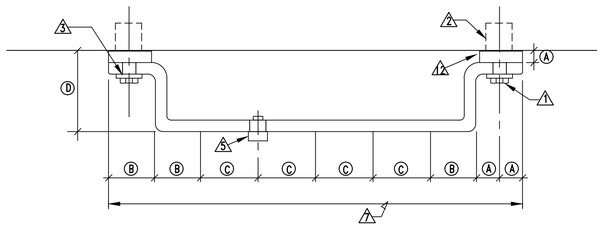

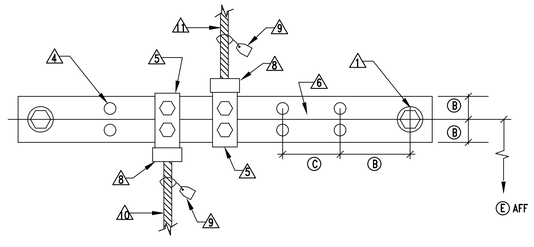

5 E7.2 DETAIL - TYPICAL GROUND BUS INSTALLATION
NO SCALE

CLASSROOM ADDITION
FOR
UNION HILL SCHOOL
SOMERVILLE, ALABAMA
FOR THE
MORGAN COUNTY BOARD OF EDUCATION

McKEE and ASSOCIATES
ARCHITECTURE and INTERIOR DESIGN
631 SOUTH HULL STREET MONTGOMERY, ALABAMA 36104 (334) 834-9933

CHARLES M. BREWER LICENSED No. 37059 PROFESSIONAL ENGINEER 10-13-2022

SHEET TITLE : GROUNDING DETAILS AND NOTES
MCKEE JOB # : 22-134
DRAWN BY : CMB
DATE: 10.13.2022
REVISED DATE:
REVISED DATE:
REVISED DATE:

Gunn & Associates, P.C.
Consulting Engineers
3102 Highway 14, Millbrook, AL 36054, Tel: 334.285.1273
1200 Providence Park, Suite 200, Birmingham, AL 35242
GA#22-065

SHEET NO. : E7.2

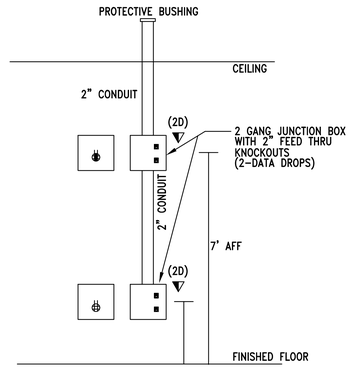

1 E8.1 DETAIL - FRONT OF CLASSROOM ROUGH-IN DETAIL "▼"
NO SCALE

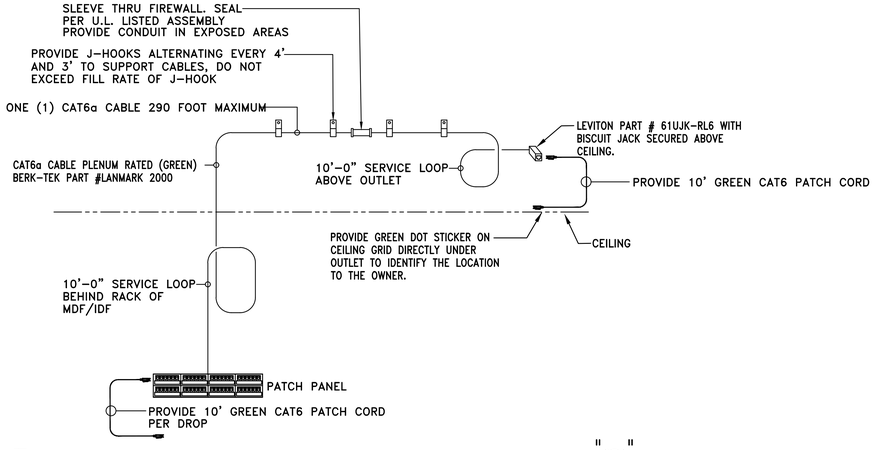

2 E8.1 DETAIL - TYPICAL WIRELESS ACCESS POINT OUTLET "Ⓦ"
NO SCALE

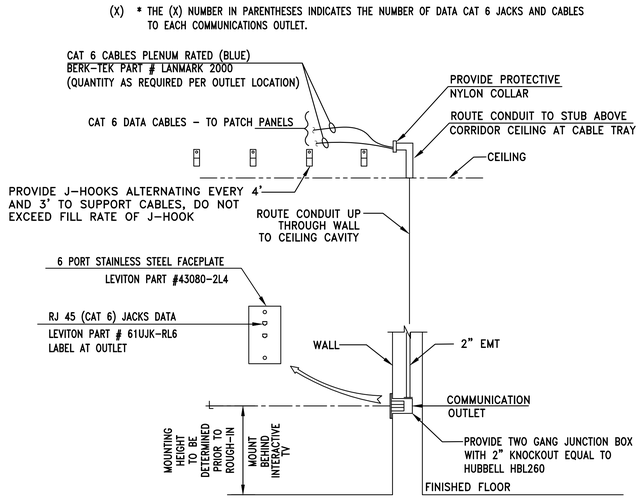

3 E8.1 DETAIL - TYPICAL COMMUNICATIONS OUTLET "▼(X)"
NO SCALE

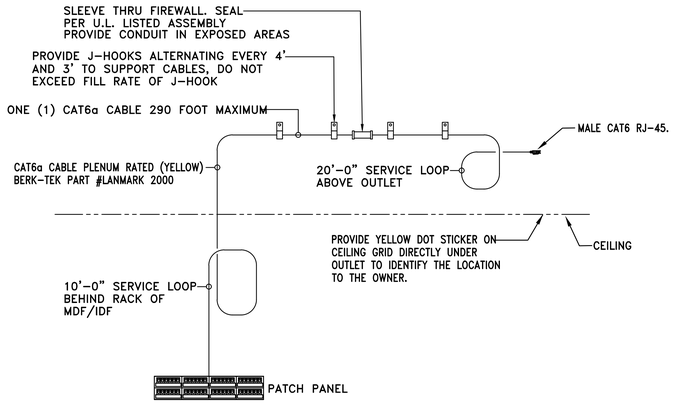

4 E8.1 DETAIL - TYPICAL SPEAKER SYSTEM CONNECTION "Ⓢ A"
NO SCALE

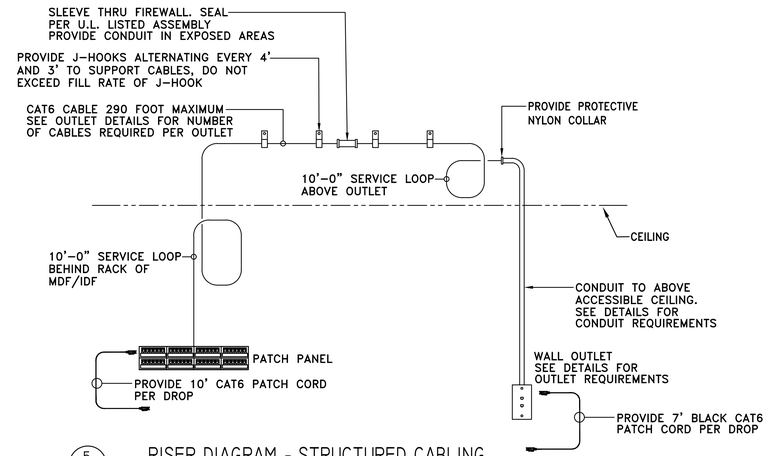

5 E8.1 RISER DIAGRAM - STRUCTURED CABLING
NO SCALE

CAT6 CABLE COLOR CODING	
DATA	BLUE CAT6
WIRELESS ACCESS	GREEN CAT6
SECURITY CAMERA	ORANGE CAT6
SPEAKERS/CLASSROOM CAMERA	YELLOW CAT6

* NOTE PROVIDE SINGLE GANG JUNCTION BOX WITH CONDUIT STUBBED TO ABOVE 3/4" CONDUIT STUBBED TO ABOVE INTERIOR CEILING. COORDINATE EXTERIOR CAMERA KEYSTONE LOCATION WITH OWNER PRIOR TO INSTALLATION

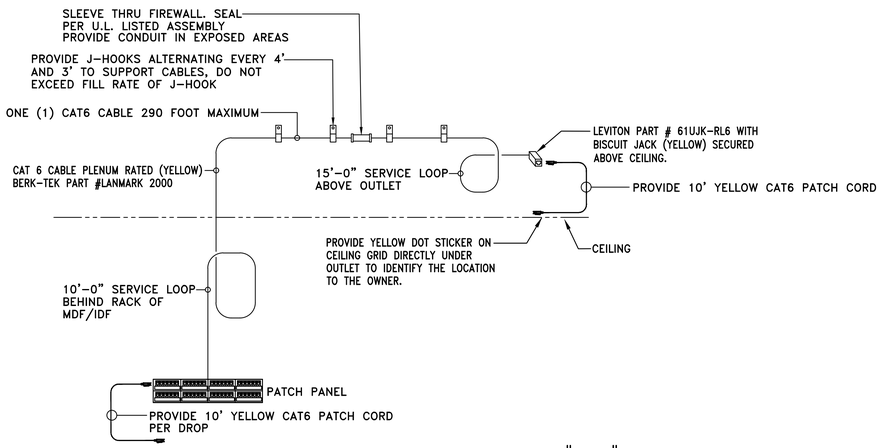

6 E8.1 DETAIL - TYPICAL CAMERA OUTLET "Ⓒ"
NO SCALE

CLASSROOM ADDITION
FOR
UNION HILL SCHOOL
SOMERVILLE, ALABAMA
FOR THE
MORGAN COUNTY BOARD OF EDUCATION

McKEE and ASSOCIATES
ARCHITECTURE and INTERIOR DESIGN
631 SOUTH HULL STREET MONTGOMERY, ALABAMA 36104 (334) 834-9933

Charles M. Brewer LICENSED No. 27591 PROFESSIONAL 10-13-2022 ENGINEER CHARLES M. BREWER

SHEET TITLE : AUXILIARY DETAILS

MCKEE JOB # : 22-134

DRAWN BY : CMB

DATE: 10.13.2022

REVISED DATE:

REVISED DATE:

REVISED DATE:

Gunn & Associates, P.C.
Consulting Engineers
3102 Highway 14
Millbrook, AL 36054
Tel: 334.285.1273
1200 Providence Park, Suite 200
Birmingham, AL 35242
GA#22-065

SHEET NO. : E8.1

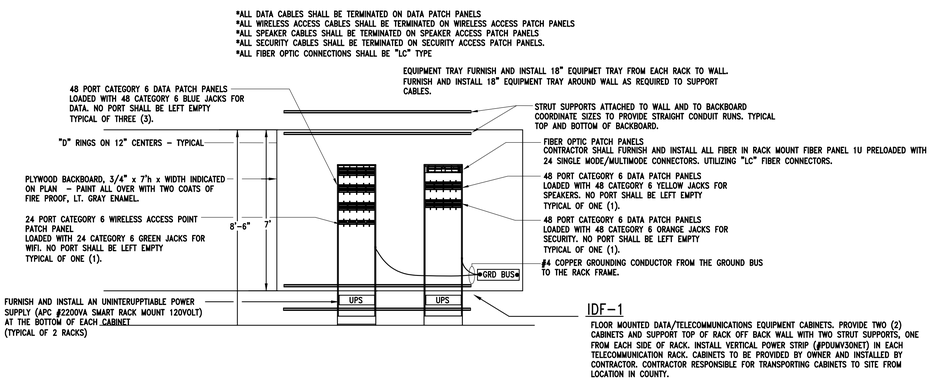

1 E8.2 IDF-I COMMUNICATIONS RACK ELEVATION

NO SCALE

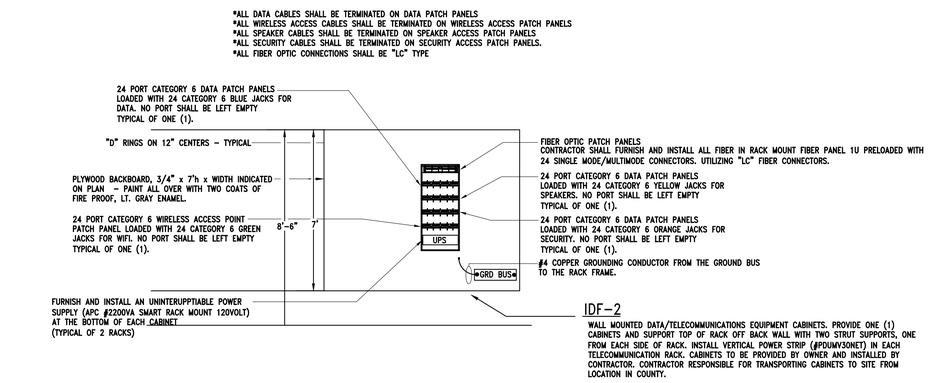

2 E8.2 IDF-2 COMMUNICATIONS RACK ELEVATION

NO SCALE

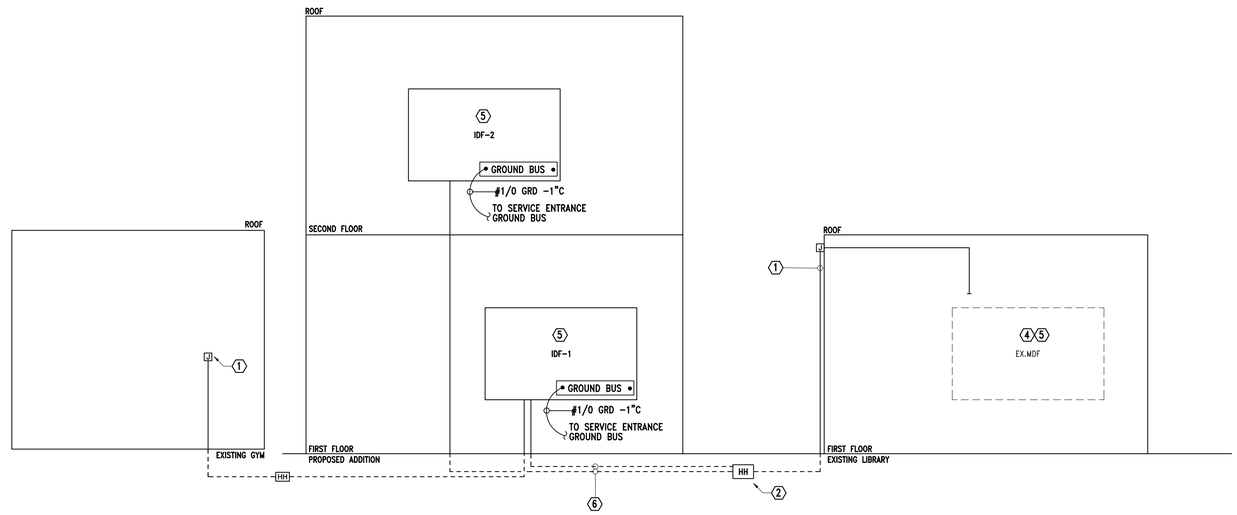

KEYED NOTES:

1. PROVIDE 2" CONDUIT EXTENDED FOR ABOVE EXISTING MDF, ABOVE CEILING, THROUGH EXTERIOR WALL. CONDUIT SHALL EXTEND DOWN BELOW GRADE, TO FIBER HAND HOLE. PROVIDE (2) 12 STRAND (OSP) SINGLE MODE FIBER OPTIC CABLE. VERIFY ROUTE AND LOCATION PRIOR TO BIDS AND ADJUST LENGTHS AS REQUIRED. SEE SITE PLAN FOR ADDITIONAL INFORMATION.
2. NEW COMMUNICATION HANDHOLE. SEE SITE PLAN FOR ADDITIONAL INFORMATION AND REQUIREMENTS.
3. PROVIDE A 12 STRAND (OSP) SINGLE MODE FIBER OPTIC CABLE. VERIFY ROUTE AND LOCATION PRIOR TO BIDS AND ADJUST LENGTHS AS REQUIRED.
4. SEE SITE PLAN FOR LOCATION.
5. PROVIDE ADDITIONAL FIBER OPTIC PATCH PANELS AS NEEDED.

COMMUNICATION NOTES:

1. PROVIDE 5/8" STRUT ASSEMBLY AT TOP AND BOTTOM OF IDF TO SUPPORT ALL CONDUITS TERMINATING AT BACKBOARD.
2. TBB SHALL BE 3/4" PLYWOOD EXTERIOR RATED AND CUT TO COVER ALL WALLS OR AS INDICATED. PAINT WITH TWO COATS OF FIRE RETARDENT PAINT. MOUNT 2' AFF.
3. PROVIDE A PLASTIC BUSHING OR PROTECTIVE COLLAR AT EACH CONDUIT TERMINATION, INCLUDING TERMINATIONS ABOVE THE CEILING, AT CABLE TRAY, OR AT TBB.
4. ALL CONDUIT TERMINATIONS SHOULD BE DONE EVENLY AT THE TOP AND BOTTOM OF TBB. TERMINATIONS SHALL BE MADE WITHIN THE FIRST FEW INCHES OF THE TBB.
5. SEAL ALL CONDUITS FROM THE EXTERIOR WITH A SEALING COMPOUND, ONCE ALL CABLING HAS BEEN INSTALLED.
6. PROVIDE GROUND BUS FOR EACH TBB. SEE GROUND BUS INSTALLATION DETAIL.
7. PROVIDE ALL CONDUITS WITH PULLWIRES.
8. STENCIL ALL JUNCTION BOX COVERS ABOVE THE CEILING WITH 2" LETTERS THAT READ "COMM".
9. ELECTRICAL CONTRACTOR WILL BE RESPONSIABLE FOR ALL RACEWAYS, CABLE TRAY, CABLING, PATCH PANELS, TERMINATIONS, BACKBOARDS, ETC. SEE RISER DIAGRAM, DETAILS, AND SPECIFICATIONS FOR FURTHER EQUIPMENT REQUIREMENTS.
10. BOND RACK FRAMES, STRUT, CONDUITS, AND LADDER RACK TO THE GROUND BUS WITH MINIMUM SIZE WIRE OF #1/0.
11. COMMUNICATION CABLING AND EQUIPMENT MUST BE COMPATIBLE TO THE EXISTING LEVITON SYSTEM PROVIDED IN RECENT GYMNASIUM PROJECT AT THE MDF. MAINTAIN CURRENT MANUFACTURER WARRANTIES ON ALL EXISTING IT EQUIPMENT.

3 E8.2 COMMUNICATION BACKBOARD RISER DIAGRAM

NO SCALE

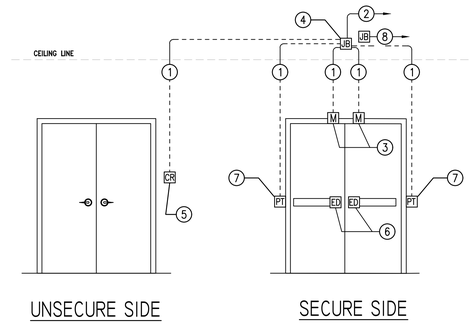

A E8.3 TYPICAL DOOR TYPE "A"

NO SCALE

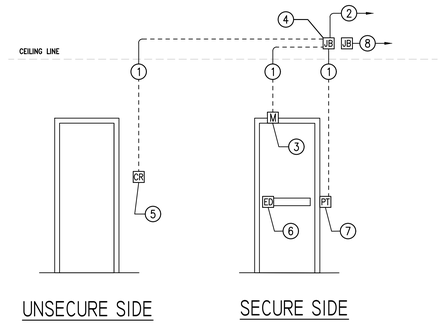

B E8.3 TYPICAL DOOR TYPE "B"

NO SCALE

DOOR/SECURITY/ACCESS HARDWARE KEY

1. 3/4" CONDUIT TO JUNCTION BOX.
2. 3/4" CONDUIT STUBBED TO ABOVE NEAREST ACCESSIBLE CEILING.
3. RECESSED DOOR POSITION SWITCH. FRAME TO BE PREPPED BY DOOR SUPPLIER.
4. 4 SQUARE JUNCTION BOX MOUNTED ABOVE NEAREST ACCESSIBLE CEILING.
5. CARD READER. SEE SPECIFICATIONS FOR MODEL NUMBER. MOUNTED 48" A.F.F. ON SINGLE GANG BOX.
6. EXIT DEVICE WITH LATCH RETRACTION AND INTEGRAL REQUEST - TO - EXIT SWITCH.
7. POWER TRANSFER HINGE. (BY OTHERS)
8. PROVIDE (1) CAT 6 CONNECTION BACK TO IDF WITH 15' SLACK AT DOOR.

CLASSROOM ADDITION
FOR
UNION HILL SCHOOL
SOMERVILLE, ALABAMA
FOR THE
MORGAN COUNTY BOARD OF EDUCATION

McKEE and ASSOCIATES
ARCHITECTURE and INTERIOR DESIGN
631 SOUTH HULL STREET MONTGOMERY, ALABAMA 36104 (334) 834-9933

Charles M. Brewer
LICENSED
No. 37059
PROFESSIONAL
10-13-2022
ENGINEER
CHARLES M. BREWER

SHEET TITLE : AUXILIARY DETAILS

MCKEE JOB # : 22-134

DRAWN BY : CMB

DATE: 10.13.2022

REVISED DATE:

REVISED DATE:

REVISED DATE:

Gunn & Associates, P.C.
Consulting Engineers
3102 Highway 14
Millbrook, AL 36054
Tel: 334.285.1273
1200 Providence Park, Suite 200
Birmingham, AL 35242
GA#22-065

SHEET NO. : E8.2