

ADDITIONS
TO
ROBERTSDALE HIGH SCHOOL
FOR THE
BALDWIN COUNTY BOARD OF EDUCATION

LOCATION MAP

ROBERTSDALE, ALABAMA



VICINITY MAP

ROBERTSDALE HIGH SCHOOL

21630 HIGHWAY 59, ROBERTSDALE, ALABAMA 36567

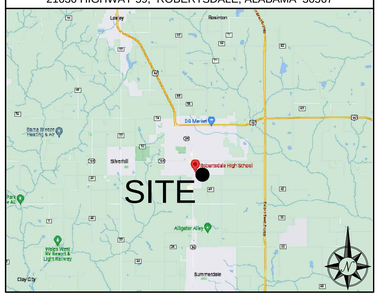
Loxley
Rawlinson
Silverhill
Robertsdale High School
SITE
Alligator Alley
Summerdale
Foley
Gulf Shores
Orange Beach
Perdido Bay
Bay La Launch
Gulf of Mexico
Ono Island
Gulf State Park
Alabama Point
Orange Beach
Perdido Pass
Florida
Pensacola
Pensacola Bay
Pensacola Beach
Gulf Breeze
Navarre
Navarre Beach
Santa Rosa Island
Eglin AFB
Hurlburt Field
Fort Walton Beach
Destin
Destin Pass
Choctawhatchee Bay
Choctawhatchee River
Niceville
Valparaiso
Eglin Air Force Base
Crestview
Baker
Milton
Whiting Field
Whiting Field Naval Air Station
Whiting Field Naval Air Station Annex
Jay
Bagdad
Pace
Milton
Holley

NOTICE

FOR YOUR SAFETY
THIS IS AN
EDUCATIONAL
OCCUPANCY
WITH A

MAXIMUM OCCUPANCY OF

156

PERSONS,
BY ORDER OF
THE CODE OFFICIAL
Keep Posted Under Penalty Of Law

PROVIDE ONE 12"X12" PERMANENT SIGN AS SHOWN ABOVE, INSTALLED IN PRACTICE FIELD 821.

TOTAL BUILDING PLUMBING CALCULATIONS

2021 INTERNATIONAL PLUMBING CODE
EDUCATIONAL OCCUPANCY REQUIREMENTS:

OCCUPANT LOAD TOTAL = **827** PERSONS (1/2 FOR MALE, 1/2 FOR FEMALE)

TOILETS (TABLE 2902.1)
MALE (1 PER 50 OCC.) (**414** OCC.): **9** REQUIRED (6 URINALS ALLOWED)
FEMALE (1 PER 50 OCC.) (**414** OCC.): **9** REQUIRED

LAVATORIES (TABLE 2902.1)
MALE (1 PER 50 OCC.) (**414** OCC.): **9** REQUIRED
FEMALE (1 PER 50 OCC.) (**414** OCC.): **9** REQUIRED

DRINKING FOUNTAINS (TABLE 2902.1)
(1 PER 100 OCC.) (**827** OCC.): **9** REQUIRED

SERVICE SINK (TABLE 2902.1): **1** REQUIRED

PLUMBING PROVIDED TOTAL
TOILETS (TABLE 2902.1)
MALE - 10 PROVIDED (5 URINALS)
FEMALE - 10 PROVIDED
UNISEX - 1 PROVIDED

LAVATORIES (TABLE 2902.1)
MALE - 9 PROVIDED
FEMALE - 9 PROVIDED
UNISEX - 1 PROVIDED

DRINKING FOUNTAINS (TABLE 2902.1): 10 PROVIDED
SERVICE SINK (TABLE 2902.1): **4 PROVIDED**

GYMNASIUM PLUMBING CALCULATIONS

2021 INTERNATIONAL PLUMBING CODE
REQUIREMENTS:

OCCUPANT LOAD TOTAL = **310** PERSONS (1/2 FOR MALE, 1/2 FOR FEMALE)

TOILETS (TABLE 2902.1)
MALE (1 PER 75 OCC.) (**155** OCC.): **3** REQUIRED (2 URINALS ALLOWED)
FEMALE (1 PER 40 OCC.) (**155** OCC.): **4** REQUIRED

LAVATORIES (TABLE 2902.1)
MALE (1 PER 200 OCC.) (**155** OCC.): **1** REQUIRED
FEMALE (1 PER 150 OCC.) (**155** OCC.): **2** REQUIRED

DRINKING FOUNTAINS (TABLE 2902.1)
(1 PER 1,000 OCC.) (**310** OCC.): **1** REQUIRED

SERVICE SINK (TABLE 2902.1): **1** REQUIRED

PLUMBING PROVIDED TOTAL

TOILETS (TABLE 2902.1)
MALE - 4 PROVIDED (2 URINALS)
FEMALE - 4 PROVIDED

LAVATORIES (TABLE 2902.1)
MALE - 2 PROVIDED
FEMALE - 2 PROVIDED

DRINKING FOUNTAINS (TABLE 2902.1) - 2 PROVIDED

SERVICE SINK (TABLE 2902.1): **1 PROVIDED**

EXIT CALCULATIONS

TOTAL BUILDING AREA

OCCUPANCY TYPE - EDUCATIONAL GROUP '**E**'
BUILDING TYPE: **II-B**
ALLOWABLE AREA FACTOR: **58,000** SQ FT (TABLE 506.2)
ACTUAL BUILDING AREA - **30,026** SQ FT

ALLOWABLE HEIGHT (TABLE 504.3) ALLOWABLE # OF STORIES (TABLE 504.4)
ALLOWABLE HEIGHT: **75** FT
ALLOWABLE NO. OF STORIES: **3**
ACTUAL BUILDING HEIGHT: **± 26** FT
ACTUAL NO. OF STORIES: **1**

OCCUPANT LOAD

OCCUPANT LOAD TOTAL (1004 & TABLE 1004.5) =
827 PERSONS (1,617 PERSONS COUNTING GYM FULLY LOADED)

EXIT REQUIREMENTS

EXIT ACCESS (TABLE 1006.2.1 & TABLE 1006.3.3)
NO. OF EXITS REQUIRED: **4 FROM GYM, 4 FOR TOTAL BUILDING**
NO. OF EXITS FURNISHED: **4 FROM GYM, 8 FOR TOTAL BUILDING**

MEANS OF EGRESS WIDTH (1005.3)
SEE PLAN FOR EXIT WIDTHS

MINIMUM CORRIDOR WIDTH (TABLE 1020.3) **72 INCHES**

CODE REVIEW

CODE: **2021 INTERNATIONAL BUILDING CODE**

OCCUPANCY TYPE: **GROUP E, EDUCATIONAL**

SPRINKLERED: **YES**

NUMBER OF STORIES: **1**

CONSTRUCTION TYPE: **TYPE II-B**

TYPE **II-B**, REQUIRES THE FOLLOWING
FIRE RESISTANCE (TABLE 601):

STRUCTURAL FRAME:	**0 HOUR**
EXTERIOR BEARING WALLS:	**0 HOUR**
INTERIOR BEARING WALLS:	**0 HOUR**
EXTERIOR NONBEARING WALLS:	**0 HOUR**
INTERIOR NONBEARING WALLS:	**0 HOUR**
FLOOR CONSTRUCTION:	**0 HOUR**
ROOF CONSTRUCTION:	**0 HOUR**

OTHER REQUIREMENTS:

CORRIDORS (TABLE 1020.1): CORRIDORS IN SPRINKLERED '**E**' OCCUPANCY ARE NOT REQUIRED TO BE FIRE RATED.

EXIT ACCESS TRAVEL DISTANCE IS **250** FEET FOR SPRINKLERED **EDUCATIONAL OCCUPANCY (**TABLE 1017.2)

INCIDENTAL USES (TABLE 509.1): LAUNDRY ROOMS OVER 100 SQ FEET THAT HAVE A SPRINKLER SYSTEM SHALL HAVE PARTITION CONSTRUCTION THAT WILL PREVENT THE PASSAGE OF SMOKE, SEPARATING THE LAUNDRY FROM OTHER AREAS OF THE BUILDING (509.4.2).

PLAN LEGEND

SYMBOL	DESCRIPTION
	SMOKE-RESISTANT PARTITION - SEE PARTITION TYPE P3 ON SHEET A6.5
EXIT	PRIMARY BUILDING OR SPACE EXIT
TD 250	TRAVEL DISTANCE TO THE NEAREST EXIT
	HANDICAP ACCESSIBLE
DF	DRINKING FOUNTAIN
FE	FIRE EXTINGUISHER LOCATION
FSD	FIRE SEPARATION DISTANCE
EWR-10" EWP-34"	EXIT WIDTH REQUIRED EXIT WIDTH PROVIDED
168 340	ACTUAL OCCUPANT LOAD SERVED TOTAL EGRESS CAPACITY
CLSR	DOOR WITH A CLOSER, TO RESIST PASSAGE OF SMOKE

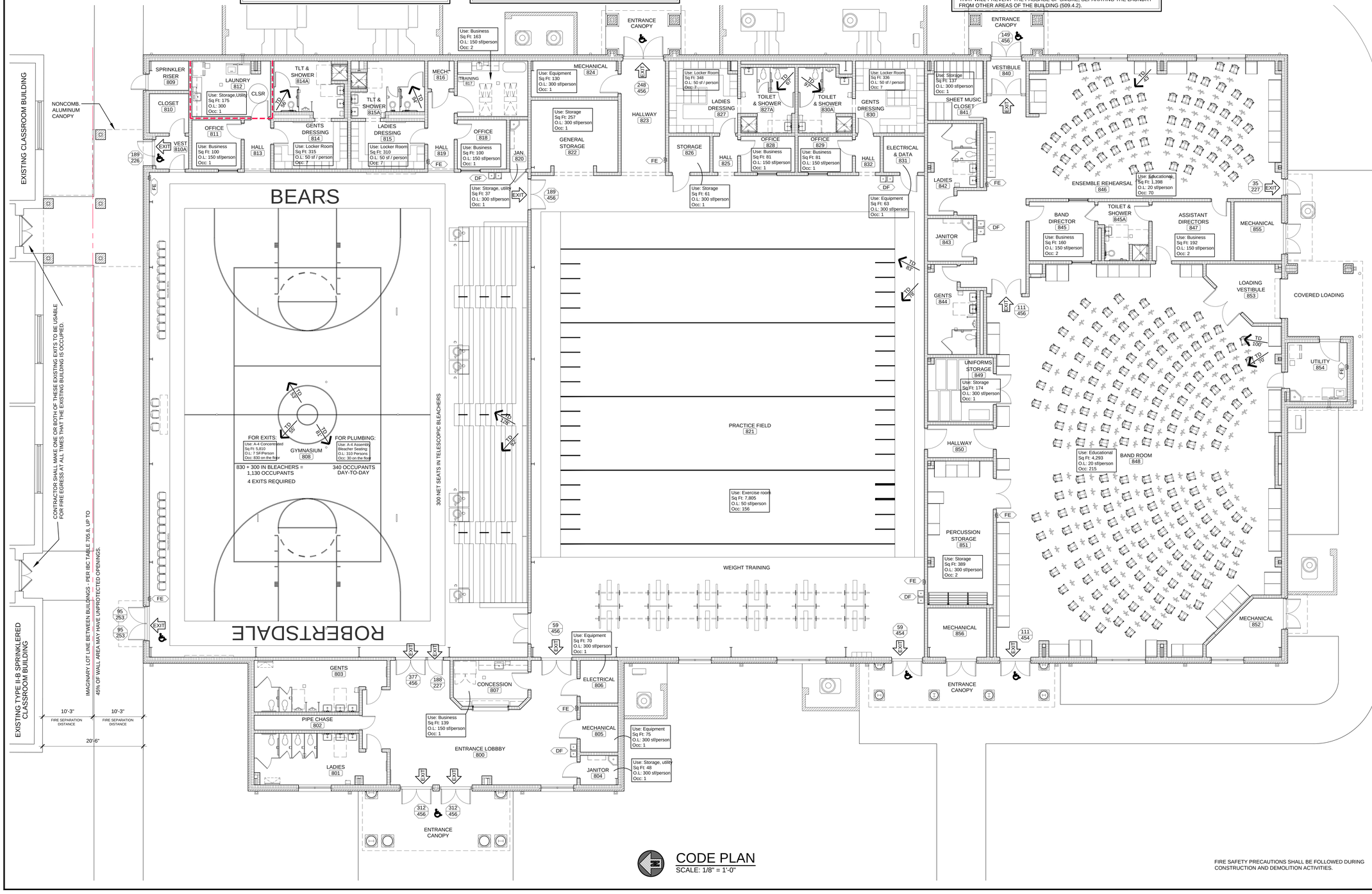

CODE PLAN

SCALE: 1/8" = 1'-0"

FIRE SAFETY PRECAUTIONS SHALL BE FOLLOWED DURING CONSTRUCTION AND DEMOLITION ACTIVITIES.

ADDITIONS TO ROBERTSDALE HIGH SCHOOL

ROBERTSDALE, ALABAMA
FOR THE
BALDWIN COUNTY BOARD OF EDUCATION

McKEE & ASSOCIATES
ARCHITECTS, INC.
631 SOUTH HULL STREET, MONTGOMERY, ALABAMA 36104 (334) 834-9933

STATE OF ALABAMA LICENSED REGISTERED ARCHITECT
WALLTER T. McKEE, JR.
No. 10802
MONTGOMERY, ALA.

SHEET TITLE : CODE PLAN

MCKEE JOB # : 23-195

DRAWN BY : VH

DATE: 10-11-2023

REVISED DATE:

REVISED DATE:

REVISED DATE:

SHEET NO. : G1.1

- Z:\2023\23-195 Additions to Robertsdale High School\CAD Drawings\Architectural\---G1.1 Code Plan.dwg
- Friday, October 20, 2023 12:31:31 PM

UTILITY PLAN NOTES

1. THE CONTRACTOR SHALL NOTIFY CONSTRUCTION MANAGER'S CONSTRUCTION SURVEILLANCE REPRESENTATIVE AND LOCAL JURISDICTIONAL INSPECTOR 48 HOURS BEFORE THE BEGINNING OF EACH PHASE OF CONSTRUCTION.

2. ALL WORK SHALL COMPLY WITH APPLICABLE STATE, FEDERAL, AND LOCAL CODES, AND ALL NECESSARY LICENSES AND PERMITS SHALL BE OBTAINED BY THE CONTRACTOR AT HIS EXPENSE UNLESS PREVIOUSLY OBTAINED BY THE OWNER/DEVELOPER.

3. THE CONTRACTOR SHALL IMMEDIATELY INFORM THE ENGINEER OF ANY DISCREPANCIES OR ERRORS HE DISCOVERS IN THE PLAN.

4. DEVIATION FROM THESE PLANS AND NOTES WITHOUT THE PRIOR CONSENT OF THE OWNER OR HIS REPRESENTATIVE OR THE ENGINEER MAY BE CAUSE FOR THE WORK TO BE UNACCEPTABLE.

5. THE CONTRACTOR IS REQUIRED TO USE THE ONE–CALL CENTER TELEPHONE NUMBER FOR THE PURPOSE OF COORDINATING THE MARKING OF UNDERGROUND UTILITIES.

6. IT IS THE RESPONSIBILITY OF THE CONTRACTOR TO DETERMINE THE LOCATION OF ALL EXISTING UNDERGROUND UTILITIES AND TO TAKE WHATEVER STEPS ARE NECESSARY TO PROVIDE FOR THEIR PROTECTION. THE ENGINEER HAS DILIGENTLY ATTEMPTED TO LOCATE AND INDICATE ALL EXISTING FACILITIES ON THESE PLANS, HOWEVER, THIS INFORMATION IS SHOWN FOR THE CONTRACTOR'S CONVENIENCE ONLY. THE ENGINEER ASSUMES NO RESPONSIBILITY FOR THE LOCATIONS OF UTILITIES SHOWN OR NOT SHOWN. CONTRACTOR TO CONTACT THE UTILITY COMPANIES FOR EXACT LOCATION OF THEIR UTILITIES PRIOR TO STARTING CONSTRUCTION. ANY AND ALL DAMAGE MADE TO UTILITIES BY THE CONTRACTOR SHALL BE THE SOLE RESPONSIBILITY OF THE CONTRACTOR TO REPAIR AND REPLACE.

7. THE CONTRACTOR SHALL COORDINATE LOCATION AND INSTALLATION OF ALL UNDERGROUND UTILITIES AND APPURTENANCES TO MINIMIZE DISTURBING CURBING, PAVING AND COMPACTED SUB–GRADE.

8. UTILITY COORDINATION SHALL BE INCLUDED IN THE PROJECT SCHEDULE AND IT IS THE EXPLICIT RESPONSIBILITY OF THE CONTRACTOR TO ASSURE THAT THE PROJECT SCHEDULE INCLUDES THE NECESSARY RELOCATION. THE CONTRACTOR SHOULD SEEK ASSISTANCE FROM ALL UTILITY COMPANIES TO LOCATE AND PROTECT THEIR FACILITIES.

9. THE CONTRACTORS SHALL BE RESPONSIBLE FOR ANY DAMAGE DONE BY HIS EQUIPMENT TO EXISTING UTILITIES, CROSS–DRAIN PIPES AND HEADWALLS.

10. THE CONTRACTOR SHALL EXPLORE AHEAD 200 FEET SO ADJUSTMENTS CAN BE MADE IN THE ALIGNMENT OF THE PIPE IN CASE OF CONFLICTS WITH EXISTING STRUCTURES, UTILITIES AND PIPING.

11. ALL EXCESS MATERIAL FROM EXCAVATION SHALL BE DISPOSED OF BY THE CONTRACTOR. COST FOR THIS WORK SHALL BE INCLUDED IN OTHER ITEMS OF WORK.

12. THE CONTRACTOR SHALL BE RESPONSIBLE FOR PREVENTING PIPE FROM FLOATING. IF PIPE FLOATS DURING CONSTRUCTION, THE CONTRACTOR SHALL RELAY PIPE TO GRADE AT HIS EXPENSE.

13. ALL PROPERTY LINE MARKERS (IRON PINS, CONCRETE MONUMENTS, ETC.) DESTROYED DURING CONSTRUCTION SHALL BE REPLACED IN KIND BY THE CONTRACTOR. THE CONTRACTOR SHALL EMPLOY A LAND SURVEYOR REGISTERED IN THE STATE OF ALABAMA TO RESET PROPERTY MARKERS. THE COST FOR THIS WORK SHALL BE INCLUDED IN OTHER ITEMS OF WORK.

14. THE CONTRACTOR SHALL MEET OR EXCEED ALL REQUIREMENTS OF EACH UTILITIES' CONSTRUCTION SPECIFICATIONS.

GRADING AND DRAINAGE NOTES

1. THE CONTRACTOR SHALL FURNISH AND MAINTAIN ALL NECESSARY BARRICADES AROUND WORK AND SHALL PROVIDE PROTECTION AGAINST WATER DAMAGE AND SOIL EROSION.

2. ALL SILT BARRIERS MUST BE PLACED AS ACCESS IS OBTAINED DURING CLEARING. NO GRADING SHALL BE DONE UNTIL SILT BARRIER AND DETENTION FACILITIES ARE CONSTRUCTED.

3. ALL SEDIMENT CONTROL DEVICES ARE TO BE CONSTRUCTED AND FULLY OPERATIONAL PRIOR TO ANY OTHER CONSTRUCTION OR GRADING.

4. ALL SLOPES SHALL BE STABILIZED AS SOON AS POSSIBLE.

5. COMPACTION OF THE BACKFILL OF ALL TRENCHES SHALL BE COMPACTED TO THE DENSITY OF 95% OF THEORETICAL MAXIMUM DRY DENSITY (ATM D698). BACKFILL MATERIAL SHALL BE FREE FROM ROOTS, STUMPS OR OTHER FOREIGN DEBRIS AND SHALL BE PLACED AT OR NEAR OPTIMUM MOISTURE. CORRECTION OF ANY TRENCH SETTLEMENT WITHIN A YEAR FROM THE DATE OF APPROVAL WILL BE THE RESPONSIBILITY OF THE CONTRACTOR.

6. ALL FILL MATERIAL AND COMPACTION REQUIREMENTS SHALL MEET THE GEOTECHNICAL REPORT PREPARED BY GEOCON ENGINEERING & MATERIALS TESTING.

7. MAXIMUM SLOPE OF EMBANKMENT SHALL BE 3.0 FEET HORIZONTAL TO 1.0 FOOT VERTICAL, OR MATCH EXISTING.

8. PROPOSED CONTOUR INTERVALS ARE AS LABELED. ALL PROPOSED CONTOURS ARE FINISHED GRADES.

9. THE CONTRACTOR WILL INSURE THAT POSITIVE AND ADEQUATE DRAINAGE IS MAINTAINED AT ALL TIMES WITHIN THE PROJECT LIMITS. THIS MAY INCLUDE, BUT NOT LIMITED TO, REPLACEMENT OR RECONSTRUCTION OF EXISTING DRAINAGE STRUCTURES THAT HAVE BEEN DAMAGED OR REMOVED OR RE–GRADING AS REQUIRED BY THE ENGINEER, EXCEPT FOR THOSE DRAINAGE ITEMS SHOWN AT SPECIFIC LOCATIONS IN AND HAVING SPECIFIC PAY ITEMS IN THE DETAILED ESTIMATE. NO SEPARATE PAYMENT WILL BE MADE FOR ANY COSTS INCURRED TO COMPLY WITH THIS REQUIREMENT.

10. EXCESS EARTH CUT MATERIAL, IF ANY, SHALL BECOME THE RESPONSIBILITY OF THE CONTRACTOR AND SHALL BE REMOVED FROM THE SITE UNLESS OTHERWISE APPROVED TO BE PLACED ON SITE BY THE OWNER.

11. ALL STORM DRAINAGE PIPE SHALL BE LAID ON SMOOTH CONTINUOUS GRADES WITH NO VISIBLE BENDS AT JOINTS.

12. ALL STORM DRAINAGE INLET STRUCTURES SHALL HAVE METAL FRAME AND COVER FOR ACCESS.

13. THE CONTRACTOR SHALL PROVIDE ANY EXCAVATION AND MATERIAL SAMPLES NECESSARY TO CONDUCT REQUIRED SOIL TESTS. ALL ARRANGEMENTS AND SCHEDULING FOR THE TESTING SHALL BE THE CONTRACTOR'S RESPONSIBILITY.

14. SOILS TESTING AND ON–SITE INSPECTION SHALL BE PERFORMED BY AN INDEPENDENT GEOTECHNICAL ENGINEER. THE SOILS ENGINEER SHALL PROVIDE COPIES OF TEST REPORTS TO THE CONTRACTOR, THE OWNER AND THE OWNER'S REPRESENTATIVE AND SHALL PROMPTLY NOTIFY THE OWNER, HIS REPRESENTATIVE AND THE CONTRACTOR SHOULD WORK PERFORMED BY THE CONTRACTOR FAIL TO MEET THESE SPECIFICATIONS.

15. CONTRACTOR SHALL REMOVE ALL UNSUITABLE MATERIAL FROM LIMITS OF ROADWAY CONSTRUCTION AS DIRECTED BY AN INDEPENDENT GEOTECHNICAL–TECHNICAL ENGINEER. UNSUITABLE MATERIAL SHALL BE REMOVED FROM THE SITE UNLESS OTHERWISE DIRECTED.

SOIL EROSION AND SEDIMENT CONTROL NOTES

1. ALL DRAINAGE SWALES MUST BE GRASSED AND RIP–RAP MUST BE PLACED AS SHOWN TO CONTROL EROSION.

2. SILT FENCE MUST MEET THE REQUIREMENTS OF LOCAL JURISDICTIONAL AGENCY, SAID REQUIREMENTS AS SHOWN BY THESE PLANS.

3. DISTURBED AREAS SHALL BE VEGETATED AFTER CONSTRUCTION. USE TEMPORARY SEASONAL SEEDING AND MULCHING ON GOING AS PER ALDOT STANDARD SPEC. SECTIONS 652 AND 656 RESPECTIVELY AND USE CENTIPEDE SOD FOR PERMANENT GRASSING AS PER ALDOT STANDARD SPEC. SECTION 654.

4. ADDITIONAL EROSION CONTROL MEASURES OR SILT BARRIERS TO BE PLACED AS SHOWN AND/OR DIRECTED BY THE PROJECT ENGINEER AND/OR LOCAL JURISDICTIONAL INSPECTOR.

5. WHEN ANY CONSTRUCTION BORDERS A DRAINAGE COURSE:

   A. THE CONTRACTOR IS RESPONSIBLE FOR REMOVING ANY BUILDING OR OTHER EXCAVATION SPOIL DIRT, CONSTRUCTION TRASH OR DEBRIS, ETC., FROM THE DRAINAGE AREA SHOWN HEREON IN AN EXPEDITIOUS MANNER AS CONSTRUCTION PROGRESSES.

   B. THE CONTRACTOR HEREBY AGREES TO STOP ALL WORK AND RESTORE THESE AREAS IMMEDIATELY UPON NOTIFICATION BY THE LOCAL JURISDICTIONAL INSPECTOR AND/OR PROFESSIONAL ENGINEER.

6. FOR ALL CONSTRUCTION ALONG AND/OR ACROSS WATERWAYS, BANK PROTECTION AND STABILIZATION SHALL BE REQUIRED AS PER LOCAL JURISDICTIONAL EROSION LAWS,

7. ALL EROSION CONTROL MEASURES SHALL BE IN PLACE PRIOR TO COMMENCING CONSTRUCTION AND SHALL BE MAINTAINED IN PROPER WORKING ORDER UNTIL ALL DISTURBED AREAS ARE STABILIZED. CONSTRUCTION ENTRANCE PADS SHALL BE INSTALLED BY THE CONTRACTOR AT CONSTRUCTION ACCESS POINTS PRIOR TO LAND DISTURBANCE.

8. A COPY OF THE APPROVED LAND DISTURBANCE PLAN SHALL BE PRESENT ON THE SITE WHENEVER LAND DISTURBING ACTIVITY IS IN PROGRESS.

9. CONSTRUCT SILT FENCE ALONG THE DOWNSTREAM SIDE OF ALL PROPOSED FILL CONSTRUCTION.

10. EROSION CONTROL DEVICES SHALL BE INSTALLED IMMEDIATELY AFTER GROUND DISTURBANCE OCCURS. THE LOCATION OF SOME OF THE EROSION CONTROL DEVICES MAY HAVE TO BE ALTERED FROM THAT SHOWN ON THE APPROVED PLANS IF DRAINAGE PATTERNS DURING CONSTRUCTION ARE DIFFERENT FROM THE FINAL PROPOSED DRAINAGE PATTERNS. IT IS THE CONTRACTOR'S RESPONSIBILITY TO ACCOMPLISH EROSION CONTROL FOR ALL DRAINAGE PATTERNS CREATED AT VARIOUS STAGES DURING CONSTRUCTION. ANY DIFFICULTY IN CONTROLLING EROSION DURING ANY PHASE OF CONSTRUCTION SHALL BE REPORTED TO THE ENGINEER IMMEDIATELY.

11. CONTRACTOR SHALL MAINTAIN ALL EROSION CONTROL MEASURES UNTIL PERMANENT VEGETATION HAS BEEN ESTABLISHED. CONTRACTOR SHALL CLEAN OUT ALL SEDIMENT PONDS WHEN REQUIRED BY THE ENGINEER OR LOCAL JURISDICTIONAL INSPECTOR. CONTRACTOR SHALL INSPECT EROSION CONTROL MEASURES AT THE END OF EACH WORKING DAY TO ENSURE MEASURES ARE FUNCTIONING PROPERLY.

12. THE CONTRACTOR SHALL REMOVE ACCUMULATED SILT WHEN THE SILT IS 1/3 OF THE HEIGHT OF THE SILT FENCE UTILIZED FOR EROSION CONTROL. IN THE DETENTION POND, SILT SHALL BE REMOVED WHEN A DEPTH OF 18" HAS ACCUMULATED AT THE WEIR.

13. ALL EASEMENTS DISTURBED MUST BE DRESSED AND GRASSED TO CONTROL EROSION IN ACCORDANCE WITH EASEMENT PLATS PRIOR ACCEPTANCE.

14. SILT BARRIERS TO BE PLACED AT DOWNSTREAM TOE OF ALL CUT AND FILL SLOPES.

15. THE CONTRACTOR SHALL FURNISH AND MAINTAIN ALL NECESSARY BARRICADES AROUND THE WORK AND SHALL PROVIDE PROTECTION AGAINST WATER DAMAGE AND SOIL EROSION.

16. TREE PROTECTION AND EROSION CONTROL MEASURES ARE TO BE ACCOMPLISHED PRIOR TO ANY OTHER CONSTRUCTION ON THE SITE AND MAINTAINED UNTIL PERMANENT GROUND COVER IS ESTABLISHED.

17. ALL SILT BARRIERS MUST BE PLACED AS ACCESS IS OBTAINED DURING CLEARING. NO GRADING SHALL BE DONE UNTIL SILT BARRIER AND DETENTION FACILITIES ARE CONSTRUCTED.

18. ALL SEDIMENT CONTROL DEVICES ARE TO BE CONSTRUCTED AND FULLY OPERATIONAL PRIOR TO ANY OTHER CONSTRUCTION OR GRADING.

19. ALL DISTURBED AREAS TO BE GRASSED AS SOON AS POSSIBLE WITH SEASONAL TEMPORARY SEEDING AND MULCHING AS PER ALDOT STANDARD SPEC. SECTIONS 652 AND 656.

20. ALL SLOPES SHALL BE STABILIZED AS SOON AS POSSIBLE.

21. GRASS AREAS DISTURBED DURING CONSTRUCTION SHALL BE REPLACED WITH GRASS IN KIND. IN AREAS OF INDECIPHERABLE GRASSES USE CENTIPEDE SOD FOR PERMANENT GRASSING AS PER ALDOT STANDARD SPEC. SECTION 654.

22. IT IS THE CONTRACTOR'S RESPONSIBILITY TO PERFORM REQUIRED MAINTENANCE OF ALL EROSION AND SEDIMENT CONTROL DEVICES TO ENSURE THEIR FUNCTION AT ALL TIMES.

23. IF HEAVY RAINFALL IS PREDICTED, CONTRACTOR SHALL INSPECT EROSION CONTROL ITEMS WITH ENGINEER PRIOR TO EVENT, IF AT ALL POSSIBLE. ANY IMPROVEMENTS, CLEANING, OR ADJUSTMENTS THAT ARE REQUIRED PRIOR TO EVENT SHALL BE GIVEN FULL URGENCY AS MUCH IS POSSIBLE.

SITE NOTES

1. ALL CONCRETE SHALL BE CLASS A, 4,000 PSI AT 28 DAYS COMPRESSIVE STRENGTH WITH A MAXIMUM SLUMP OF 4" UNLESS NOTED OTHERWISE. ALL EXPOSED CONCRETE TO HAVE A FINE BROOM FINISH.

2. ALL MATERIALS SHALL BE NEW UNLESS USED OR SALVAGED MATERIALS ARE AUTHORIZED BY THE OWNER OR TENANT.

3. ALL DIMENSIONS ARE FACE OF CURB OR AS NOTED.

4. NECESSARY BARRICADES, SUFFICIENT LIGHTS, SIGNS AND OTHER TRAFFIC CONTROL METHODS AS MAY BE NECESSARY PER MANUAL ON UNIFORM TRAFFIC CONTROL DEVICES, PART VI, SHALL BE PROVIDED AND MAINTAINED THROUGHOUT CONSTRUCTION. THE PROJECT WILL REQUIRE ROAD CLOSURE/ TRAFFIC CONTROL SCHEME.

5. SPECIAL CARE SHALL BE GIVEN WHILE WORKING NEAR PRIVATE RESIDENCES. ANY DAMAGES TO OR ADJACENT TO PRIVATE PROPERTY SHALL BE REPAIRED AT THE EXPENSE OF THE CONTRACTOR.

6. IF ANY CONFLICTS EXIST BETWEEN APPLICABLE ACCESSIBILITY CODES, STANDARDS AND GUIDELINES THE CODES, STANDARDS, AND GUIDELINES PROVIDING THE GREATER DEGREE OF ACCESSIBILITY TAKE PRECEDENCE AS PER HUD MAP CHAPTER 5 GUIDELINES.

7. ALL ACCESSIBILITY CODES, STANDARDS AND GUIDELINES USED FOR THE PROJECT DESIGN MUST BE INCLUDED WITHIN THE CODE SUMMARY.

UTILITY PROVIDERS

POWER: BALDWIN EMC
WATER: ROBERTSDALE W&S
SEWER: ROBERTSDALE W&S
GAS: RIVIERA UTILITIES
TEL./FIBER: AT&T

ON–SITE CONTACT: SAWGRASS CONSULTING LLC.

(251) 544–7900 (OFFICE)
(251) 544–7918 (FAX)

ADDITIONS
TO
ROBERTSDALE HIGH SCHOOL
ROBERTSDALE, ALABAMA
FOR THE
BALDWIN COUNTY BOARD OF EDUCATION

Sawgrass
ENGINEERING - SURVEYING - CONSTRUCTION MANAGEMENT
30673 Sgt. E. I. "Boots" Thomas Drive, Spanish Fort, AL 36527 Phone: (251) 544-7900

McKEE & ASSOCIATES
ARCHITECTS, INC.
631 SOUTH HULL STREET, MONTGOMERY, ALABAMA 36104 (334) 834-9933

ALABAMA LICENSED No. 31242 PROFESSIONAL ENGINEER James H. Robertson, II 10-11-23

SHEET TITLE :	PROJECT NOTES
MCKEE JOB # :	23-195
DRAWN BY :	BAT
DATE:	10-11-23
REVISED DATE:	
REVISED DATE:	
REVISED DATE:	
SHEET NO. :	C-1.0

- S:\1-Clients\23-117 '23 Additions to Robertsdale HS McKee\CIVIL ENGINEERING\PRODUCTION DWGS\NOTES-DETAILS.dwg
- Friday, October 13, 2023 11:51:48 AM

LEGEND

- ROW–PROP LINE
- EX WATER–LINE
- EX WATER VALVE
- EX FIRE HYDRANT
- EX WATER METER
- EX SEWER–LINE
- EX SEWER MH
- EX FIBER–LINE
- EX TEL PED
- EX DRAINAGE PIPE
- EX DRAINAGE MH
- EX GRATE INLET
- EX FENCE
- EX UTILITY VALVE
- EX WOOD–LINE
- EX UG POWER–LINE
- EX OH POWER–LINE
- EX ELEC BOX
- EX TRANSFORMER
- EX AC UNIT
- EX SIGNAL BOX
- EX GENERATOR
- EX SIGNAL POLE
- EX POWER POLE
- EX LIGHT POLE
- EX GUY WIRE
- DEMO ITEM
- DEMO AREA
- MILLING AREA
- EX BLDG AREA
- EX ASPHALT AREA
- EX CONC AREA

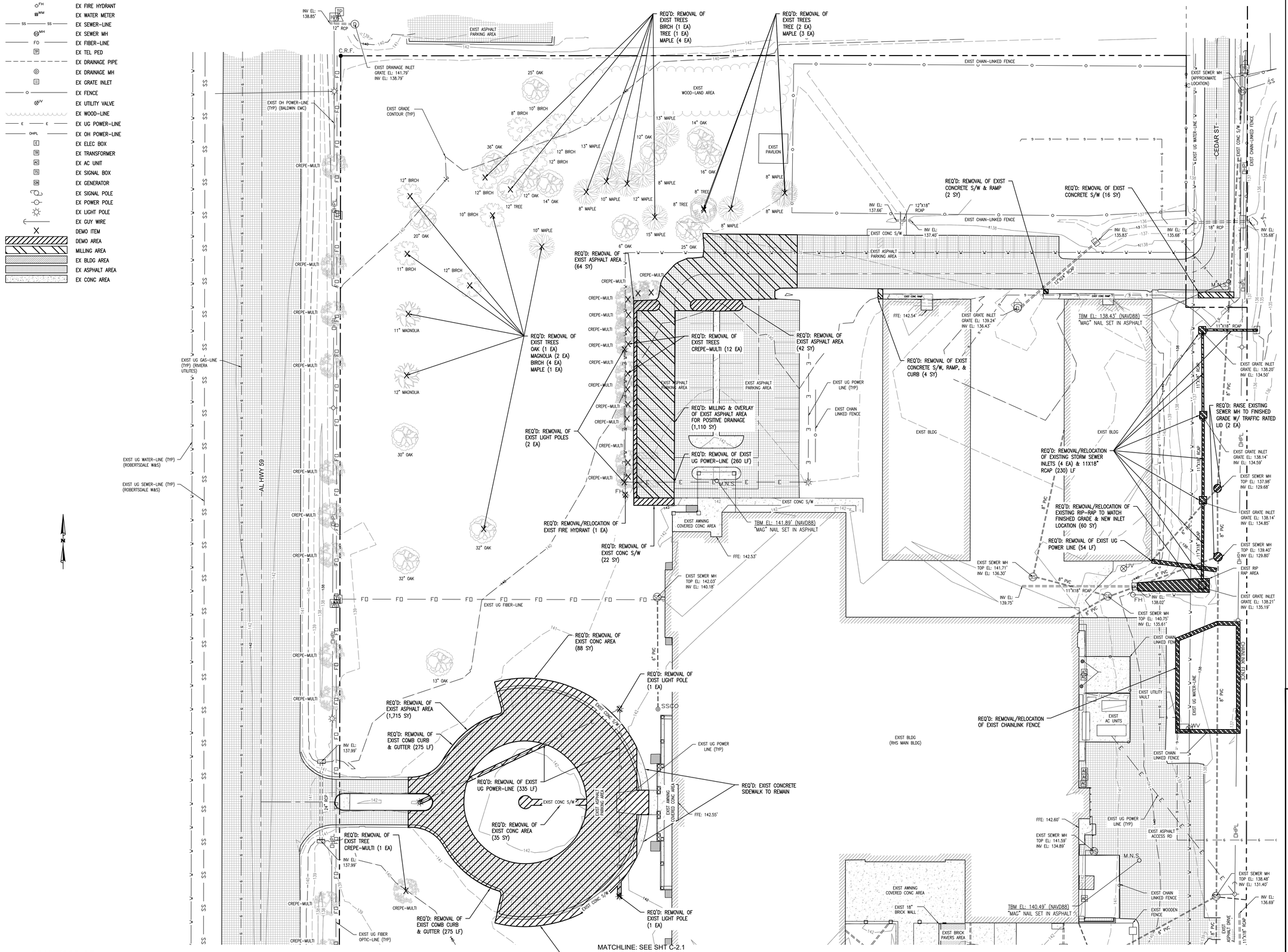

GRAPHIC SCALE

0 15 30 60

1 inch = 30 feet

ADDITIONS TO ROBERTSDALE HIGH SCHOOL

ROBERTSDALE, ALABAMA

FOR THE

BALDWIN COUNTY BOARD OF EDUCATION

McKEE & ASSOCIATES
ARCHITECTS, INC.
631 SOUTH HULL STREET, MONTGOMERY, ALABAMA 36104 (334) 834-9933

ALABAMA LICENSED ARCHITECT No. 3124 PROFESSIONAL ENGINEER 10-11-23 James H. Robertson

SHEET TITLE : EXIST COND & DEMO PLAN 1

MCKEE JOB # : 23-195

DRAWN BY : BAT

DATE: 10-11-23

REVISED DATE:

REVISED DATE:

REVISED DATE:

SHEET NO. : C-2.0

- S:\1-Clients\23-117 '23 Additions to Robertsdale HS McKee\CIVIL ENGINEERING\PRODUCTION DWGS\EXIST-DEMO PLAN.dwg
- Friday, October 13, 2023 11:51:57 AM

LEGEND

- ROW-PROP LINE
- EX WATER-LINE
- EX WATER VALVE
- EX FIRE HYDRANT
- EX WATER METER
- EX SEWER-LINE
- EX SEWER MH
- EX FIBER-LINE
- EX TEL PED
- EX DRAINAGE PIPE
- EX DRAINAGE MH
- EX GRATE INLET
- EX FENCE
- EX UTILITY VALVE
- EX WOOD-LINE
- EX UG POWER-LINE
- EX OH POWER-LINE
- EX ELEC BOX
- EX TRANSFORMER
- EX AC UNIT
- EX SIGNAL BOX
- EX GENERATOR
- EX SIGNAL POLE
- EX POWER POLE
- EX LIGHT POLE
- EX GUY WIRE
- DEMO ITEM
- DEMO AREA
- MILLING AREA
- EX BLDG AREA
- EX ASPHALT AREA
- EX CONC AREA

MATCHLINE: SEE SHT C-2.0

REQ'D: REMOVAL OF EXIST TREES BIRCH (2 EA) MAGNOLIA (2 EA) OAK (1 EA)

REQ'D: REMOVAL EXIST UG 6" WATER-LINE (184 LF)

REQ'D: REMOVAL/RELOCATION OF EXIST FIRE HYDRANT (1 EA)

REQ'D: REMOVAL OF EXIST WOODEN FENCES (60 LF)

REQ'D: REMOVAL OF EXIST CONC AREA (148 SY)

REQ'D: REMOVAL OF EXIST METAL DRAINAGE GRATE (1 EA)

REQ'D: REMOVAL OF EXIST UG POWER-LINE (83 LF)

REQ'D: REMOVAL OF EXIST TREES CREPE-MULTI (14 EA) OAK (1 EA) BIRCH (1 EA)

REQ'D: REMOVAL OF EXIST PORTABLES (3 EA), WOODEN STAIRS (3 EA), & WOODEN BOARDWALK AREA (105 SY)

REQ'D: REMOVAL OF EXIST TRANSFORMER (1 EA) & ELEC BOX (1 EA)

REQ'D: REMOVAL OF EXIST UG POWER-LINE (120 LF)

REQ'D: REMOVAL OF EXIST LIGHT POLES (4 EA)

REQ'D: REMOVAL OF EXIST TREE BIRCH (1 EA)

REQ'D: REMOVAL OF EXIST ASPHALT AREA & PARKING STRIPING (5,750 SY)

REQ'D: REMOVAL OF EXIST UG POWER-LINE (348 LF)

REQ'D: REMOVAL OF EXIST TREE OAK (1 EA)

REQ'D: MILLING & OVERLAY OF EXIST ASPHALT AREA FOR POSITIVE DRAINAGE (860 SY)

EXIST OH POWER-LINE (TYP) (BALDWIN EMC)

EXIST UG WATER-LINE (TYP) (ROBERTSDALE W&S)

EXIST UG SEWER-LINE (TYP) (ROBERTSDALE W&S)

EXIST UG GAS-LINE (TYP) (RIVIERA UTILITES)

EXIST UG FIBER OPTIC-LINE (TYP)

EXIST SEWER MH TOP EL: 140.37' INV EL: 135.35'

EXIST SEWER MH (APPROXIMATE LOCATION)

EXIST SEWER MH TOP EL: 142.08' INV EL: 138.20'

EXIST SEWER MH TOP EL: 141.04' INV EL: 135.41'

EXIST GRATE INLET GRATE EL: 141.36' INV EL: 137.84'

EXIST GRATE INLET GRATE EL: 141.78' INV EL: 138.18'

EXIST GRATE INLET GRATE EL: 141.45' INV EL: 138.46'

EXIST BRICK PAVERS AREA

EXIST BLDG (RHS MAIN BLDG)

EXIST BLDG (PORTABLE)

EXIST BOARDWALK

EXIST WOODEN STEPS (TYP)

EXIST ASPHALT PARKING AREA

EXIST ASPHALT BUS PARKING AREA

EXIST AWNING COVERED CONC S/W

EXIST CONC S/W

EXIST 18" BRICK WALL

EXIST ASPHALT ACCESS RD

EXIST RIP RAP AREA

EXIST 5" WOOD BOLLARD (TYP)

EXIST GRADE CONTOUR (TYP)

EXIST UG POWER LINE (TYP)

EXIST UG WATER-LINE

EXIST ASPHALT PARKING AREA

TBM EL: 139.02' (NAVD88) "MAG" NAIL SET IN ASPHALT

TBM EL: 138.43' (NAVD88) "MAG" NAIL SET IN ASPHALT

EXIST 4" CONC BOLLARD (TYP)

EXIST ASPHALT DRIVE

EXIST UG SEWER-LINE (TYP) (ROBERTSDALE W&S)

EXIST UG WATER-LINE (TYP) (ROBERTSDALE W&S)

AL HWY 59

KRCHAK LN

FAIRGROUND RD

12" BIRCH
14" MAGNOLIA
20" OAK
15" BIRCH
12" MAGNOLIA
28" OAK
24" OAK
42" OAK
14" BIRCH
18" OAK
12" BIRCH
30" OAK
25" OAK
15" OAK
16" OAK
8" OAK
8" TREE
14" BIRCH

GRAPHIC SCALE

0 15 30 60

1 inch = 30 feet

ADDITIONS TO ROBERTSDALE HIGH SCHOOL

ROBERTSDALE, ALABAMA

FOR THE

BALDWIN COUNTY BOARD OF EDUCATION

McKEE & ASSOCIATES
ARCHITECTS, INC.
631 SOUTH HULL STREET, MONTGOMERY, ALABAMA 36104 (334) 834-9933

ALABAMA LICENSED PROFESSIONAL ENGINEER 26312 10-11-23 James H. Robertson

SHEET TITLE : EXIST COND & DEMO PLAN 2

MCKEE JOB # : 23-195

DRAWN BY : BAT

DATE: 10-11-23

REVISED DATE:

REVISED DATE:

REVISED DATE:

SHEET NO. : C-2.1

- S:\1-Clients\23-117 '23 Additions to Robertsdale HS McKee\CIVIL ENGINEERING\PRODUCTION DWGS\EXIST-DEMO PLAN.dwg
- Friday, October 13, 2023 11:52:03 AM

LEGEND

- ROW-PROP LINE
- EX WATER-LINE
- EX WATER VALVE
- EX FIRE HYDRANT
- EX WATER METER
- PR WATER-LINE
- PR FIRE HYDRANT
- PR FDC
- EX SEWER-LINE
- EX SEWER MH
- PR-SEWER-LINE
- PR-SEWER MH
- PR-SEWER CO
- EX FIBER-LINE
- EX TEL PED
- EX DRAINAGE PIPE
- PR DRAINAGE SWALE
- EX DRAINAGE MH
- EX GRATE INLET
- EX FENCE
- EX UTILITY VALVE
- EX WOOD-LINE
- EX UG POWER-LINE
- EX OH POWER-LINE
- EX ELEC BOX
- EX TRANSFORMER
- EX AC UNIT
- EX SIGNAL BOX
- EX GENERATOR
- EX SIGNAL POLE
- EX POWER POLE
- EX LIGHT POLE
- EX GUY WIRE
- EX BLDG AREA
- EX ASPHALT AREA
- EX CONC AREA
- PR ASPHALT AREA
- PR CONC AREA
- PR BLDG
- PR AWNING AREA
- MILLING AREA

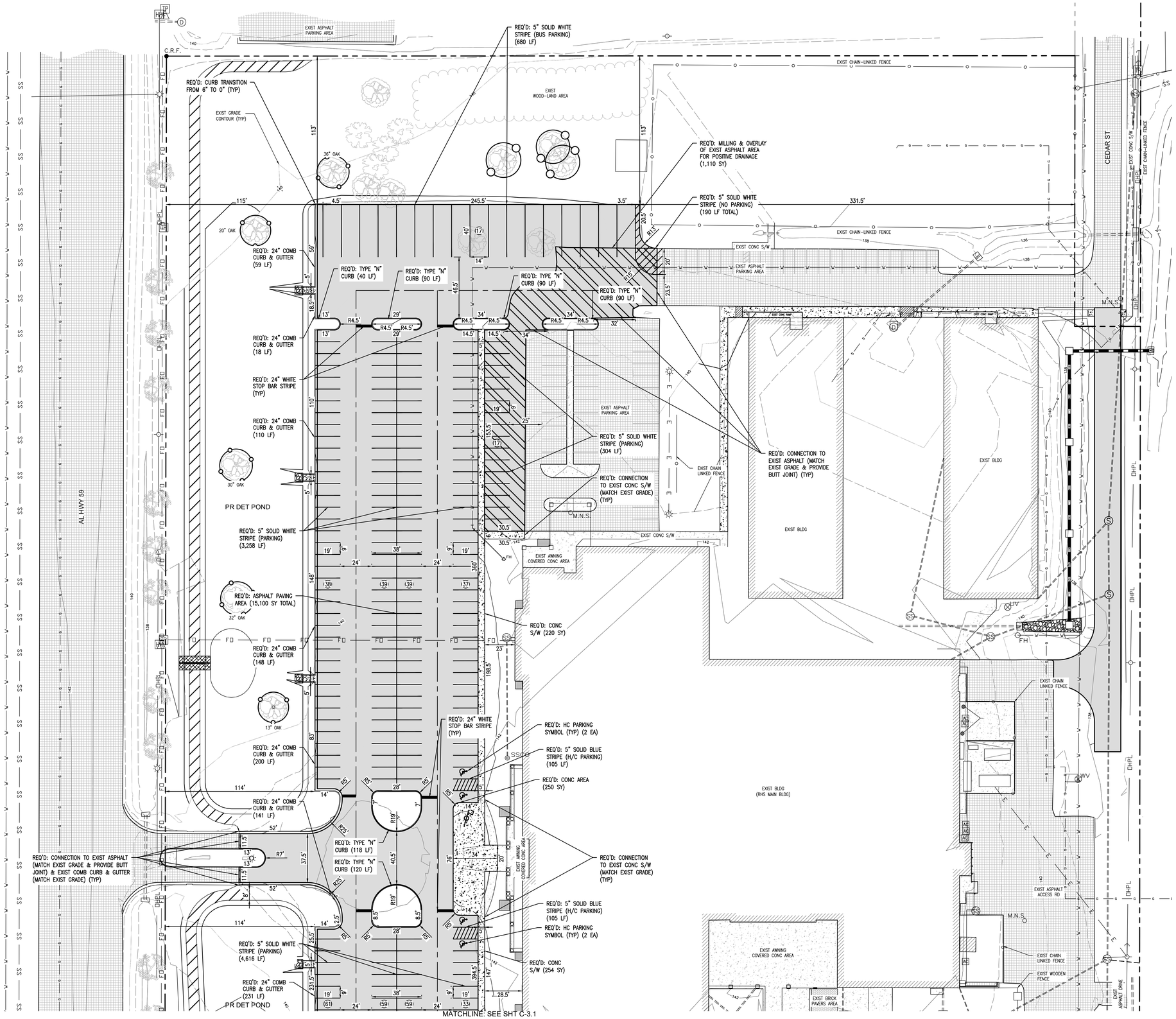

GRAPHIC SCALE

0 15 30 60

1 inch = 30 feet

ADDITIONS

TO

ROBERTSDALE HIGH SCHOOL

ROBERTSDALE, ALABAMA

FOR THE

BALDWIN COUNTY BOARD OF EDUCATION

McKEE & ASSOCIATES
ARCHITECTS, INC.
631 SOUTH HULL STREET, MONTGOMERY, ALABAMA 36104 (334) 834-9933

Sawgrass
ENGINEERING - SURVEYING - CONSTRUCTION MANAGEMENT
30073 Sgt. E. T. "Buck" Thomas Drive, Spanish Fort, AL 36527 Phone: (251) 544-7900

ALABAMA LICENSED PROFESSIONAL ENGINEER 10-11-23 James H. Robertson, II

SHEET TITLE : GEOMETRIC PLAN 1

MCKEE JOB # : 23-195

DRAWN BY : BAT

DATE: 10-11-23

REVISED DATE:

REVISED DATE:

REVISED DATE:

SHEET NO. : C-3.0

- S:\1-Clients\23-117 '23 Additions to Robertsdale HS McKee\CIVIL ENGINEERING\PRODUCTION DWGS\GEO-UTIL PLAN.dwg
- Friday, October 13, 2023 11:52:19 AM

LEGEND

- ROW-PROP LINE
- EX WATER-LINE
- EX WATER VALVE
- EX FIRE HYDRANT
- EX WATER METER
- PR WATER-LINE
- PR FIRE HYDRANT
- PR FDC
- EX SEWER-LINE
- EX SEWER MH
- PR-SEWER-LINE
- PR-SEWER MH
- PR-SEWER CO
- EX FIBER-LINE
- EX TEL PED
- EX DRAINAGE PIPE
- PR DRAINAGE SWALE
- EX DRAINAGE MH
- EX GRATE INLET
- EX FENCE
- EX UTILITY VALVE
- EX WOOD-LINE
- EX UG POWER-LINE
- EX OH POWER-LINE
- EX ELEC BOX
- EX TRANSFORMER
- EX AC UNIT
- EX SIGNAL BOX
- EX GENERATOR
- EX SIGNAL POLE
- EX POWER POLE
- EX LIGHT POLE
- EX GUY WIRE
- EX BLDG AREA
- EX ASPHALT AREA
- EX CONC AREA
- PR ASPHALT AREA
- PR CONC AREA
- PR BLDG
- PR AWNING AREA
- MILLING AREA

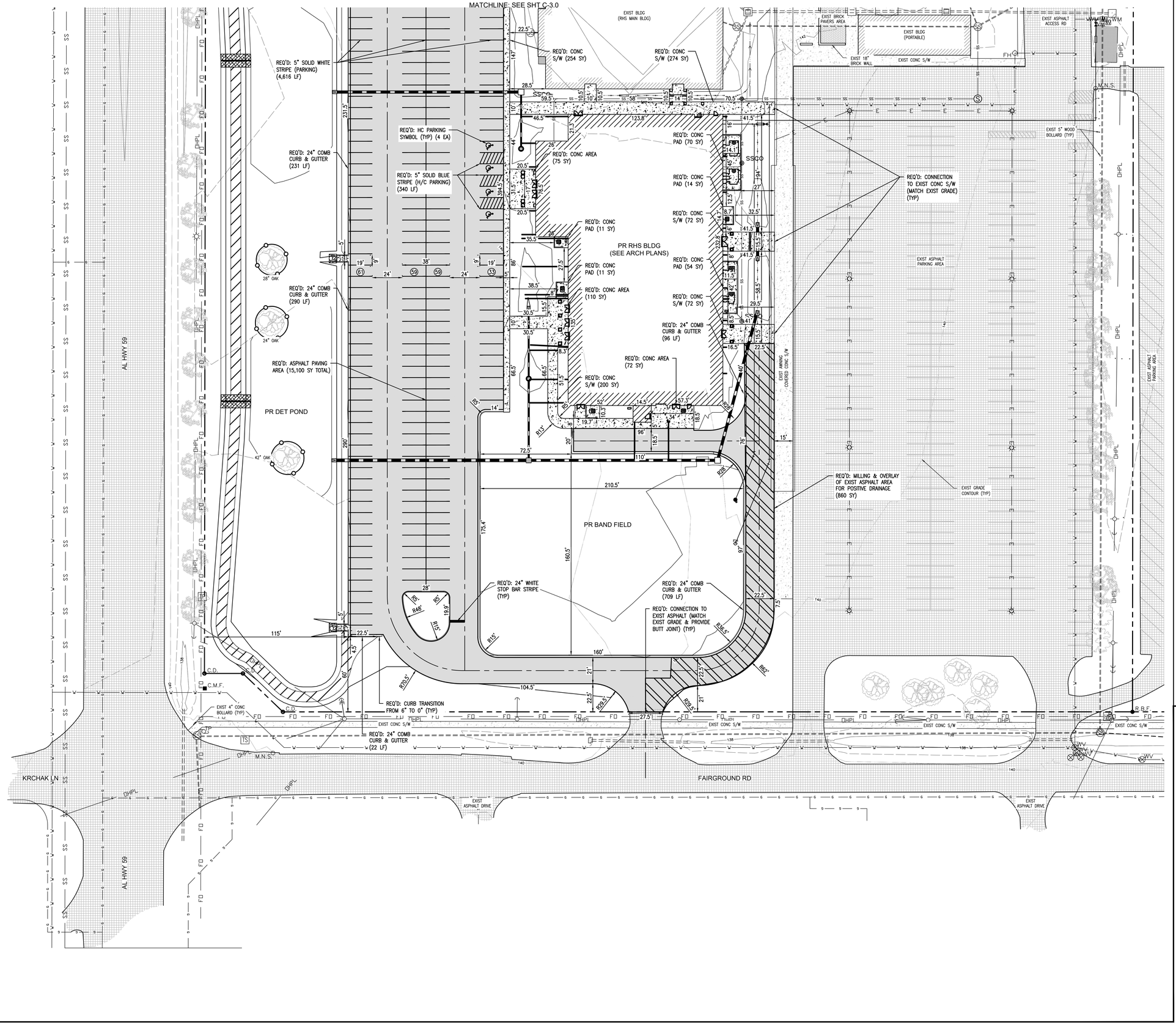

GRAPHIC SCALE

0 15 30 60

1 inch = 30 feet

ADDITIONS

TO

ROBERTSDALE HIGH SCHOOL

ROBERTSDALE, ALABAMA

FOR THE

BALDWIN COUNTY BOARD OF EDUCATION

McKEE & ASSOCIATES
ARCHITECTS, INC.
631 SOUTH HULL STREET, MONTGOMERY, ALABAMA 36104 (334) 834-9933

Sawgrass
ENGINEERING - SURVEYING - CONSTRUCTION MANAGEMENT
30073 Sgt. E. L. "Boud" Thomas Drive, Spanish Fort, AL 36527 Phone: (251) 544-7000

ALABAMA LICENSED PROFESSIONAL ENGINEER 10-11-23 James H. Robertson, II

SHEET TITLE : GEOMETRIC PLAN 2

MCKEE JOB # : 23-195

DRAWN BY : BAT

DATE: 10-11-23

REVISED DATE:

REVISED DATE:

REVISED DATE:

SHEET NO. : C-3.1

- S:\1-Clients\23-117 '23 Additions to Robertsdale HS McKee\CIVIL ENGINEERING\PRODUCTION DWGS\GEO-UTIL PLAN.dwg
- Friday, October 13, 2023 11:52:32 AM

LEGEND

- ROW-PROP LINE
- EX WATER-LINE
- EX WATER VALVE
- EX FIRE HYDRANT
- EX WATER METER
- PR WATER-LINE
- PR FIRE HYDRANT
- PR FDC
- EX SEWER-LINE
- EX SEWER MH
- PR-SEWER-LINE
- PR-SEWER MH
- PR-SEWER CO
- EX FIBER-LINE
- EX TEL PED
- EX DRAINAGE PIPE
- PR DRAINAGE SWALE
- EX DRAINAGE MH
- EX GRATE INLET
- EX FENCE
- EX UTILITY VALVE
- EX WOOD-LINE
- EX UG POWER-LINE
- EX OH POWER-LINE
- EX ELEC BOX
- EX TRANSFORMER
- EX AC UNIT
- EX SIGNAL BOX
- EX GENERATOR
- EX SIGNAL POLE
- EX POWER POLE
- EX LIGHT POLE
- EX GUY WIRE
- EX BLDG AREA
- EX ASPHALT AREA
- EX CONC AREA
- PR ASPHALT AREA
- PR CONC AREA
- PR BLDG
- PR AWNING AREA
- MILLING AREA

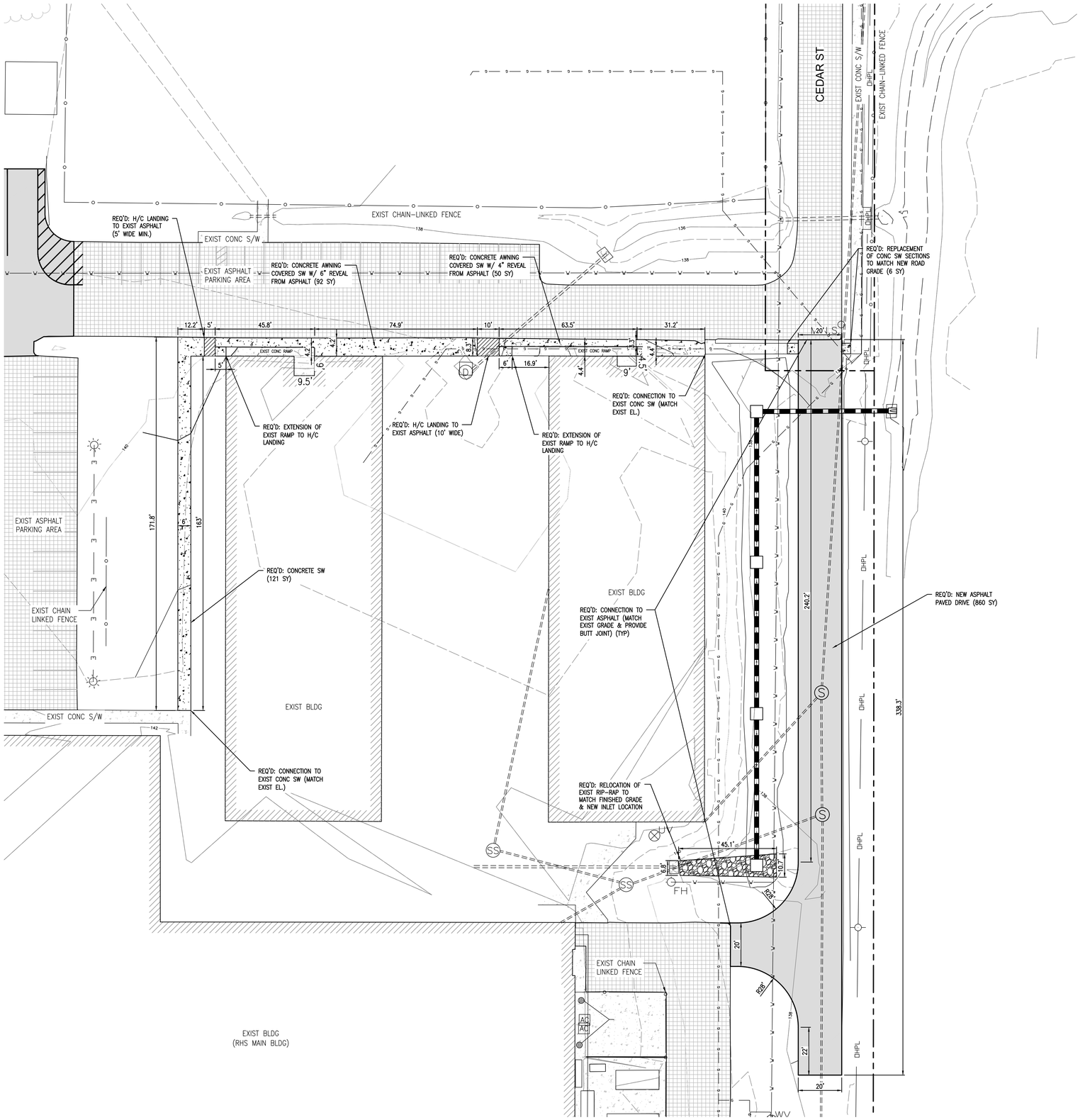

GRAPHIC SCALE

0 15 30 60

1 inch = 30 feet

ADDITIONS TO ROBERTSDALE HIGH SCHOOL

ROBERTSDALE, ALABAMA

FOR THE

BALDWIN COUNTY BOARD OF EDUCATION

McKEE & ASSOCIATES ARCHITECTS, INC.
631 SOUTH HULL STREET, MONTGOMERY, ALABAMA 36104 (334) 834-9933

Sawgrass
ENGINEERING - SURVEYING - CONSTRUCTION MANAGEMENT
30073 Sgt E. T. "Boots" Thomas Drive, Spanish Fort, AL 36527 Phone: (251) 544-7000

ALABAMA LICENSED PROFESSIONAL ENGINEER 10-11-23 James H. Robertson, II

SHEET TITLE :	GEOMETRIC PLAN 3
MCKEE JOB # :	23-195
DRAWN BY :	BAT
DATE:	10-11-23
REVISED DATE:	
REVISED DATE:	
REVISED DATE:	

SHEET NO. : C-3.2

- S:\1-Clients\23-117 '23 Additions to Robertsdale HS McKee\CIVIL ENGINEERING\PRODUCTION DWGS\GEO-UTIL PLAN.dwg
- Friday, October 13, 2023 11:52:42 AM

ADDITIONS
TO
ROBERTSDALE HIGH SCHOOL
ROBERTSDALE, ALABAMA
FOR THE
BALDWIN COUNTY BOARD OF EDUCATION

McKEE & ASSOCIATES
ARCHITECTS, INC.
631 SOUTH HULL STREET, MONTGOMERY, ALABAMA 36104 (334) 834-9933

ENGINEERING - SURVEYING - CONSTRUCTION MANAGEMENT
3003 Fall 1 "Bauer" Traveler Drive, Spanish Fort, AL 36527 Phone: (251) 626-7600

SHEET TITLE : UTILITY PLAN 1
MCKEE JOB # : 23-195
DRAWN BY : BAT
DATE: 10-11-23
REVISED DATE:
REVISED DATE:
REVISED DATE:
SHEET NO. : C-4.0

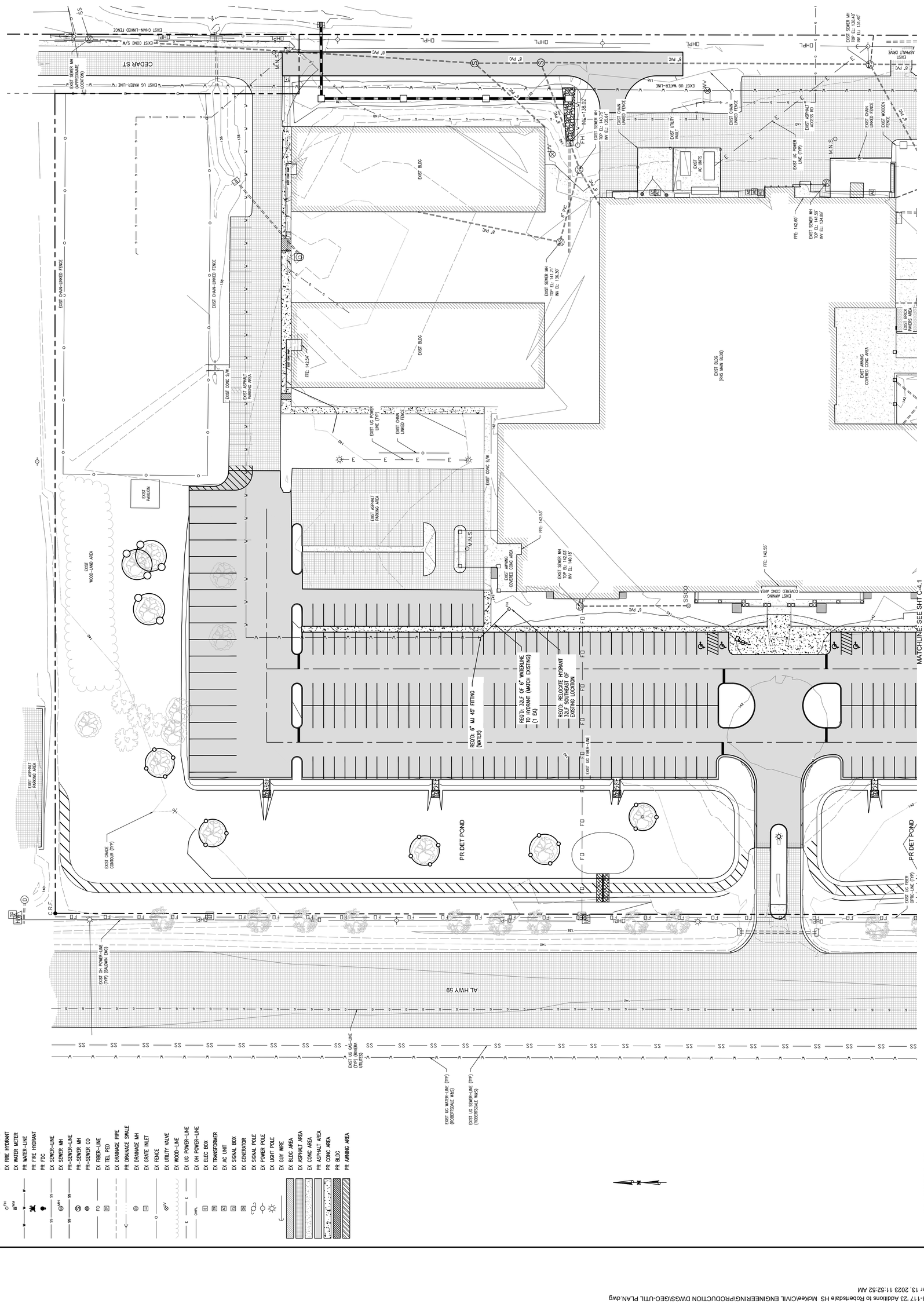

LEGEND

- ROW-PROP LINE
- EX WATER-LINE
- EX WATER VALVE
- EX FIRE HYDRANT
- EX WATER METER
- PR WATER-LINE
- PR FIRE HYDRANT
- PR FDC
- EX SEWER-LINE
- EX SEWER MH
- PR-SEWER-LINE
- PR-SEWER MH
- PR-SEWER CO
- EX FIBER-LINE
- EX TEL PED
- EX DRAINAGE PIPE
- PR DRAINAGE SWALE
- EX DRAINAGE MH
- EX GRATE INLET
- EX FENCE
- EX UTILITY VALVE
- EX WOOD-LINE
- EX UG POWER-LINE
- EX OH POWER-LINE
- EX ELEC BOX
- EX TRANSFORMER
- EX AC UNIT
- EX SIGNAL BOX
- EX GENERATOR
- EX SIGNAL POLE
- EX POWER POLE
- EX LIGHT POLE
- EX GUY WIRE
- EX BLDG AREA
- EX ASPHALT AREA
- EX CONC AREA
- PR ASPHALT AREA
- PR CONC AREA
- PR BLDG
- PR AWNING AREA

GRAPHIC SCALE
0 15 30 60
1 inch = 30 feet

- S:\1-Clients\23-117 23 Additions to Robertsdale HS Mckee\CIVIL ENGINEERING\PRODUCTION DWGS\GEO-UTIL PLAN.dwg
- Friday, October 13, 2023 11:52:52 AM

LEGEND

- ROW-PROP LINE
- EX WATER-LINE
- EX WATER VALVE
- EX FIRE HYDRANT
- EX WATER METER
- PR WATER-LINE
- PR FIRE HYDRANT
- PR FDC
- EX SEWER-LINE
- EX SEWER MH
- PR-SEWER-LINE
- PR-SEWER MH
- PR-SEWER CO
- EX FIBER-LINE
- EX TEL PED
- EX DRAINAGE PIPE
- PR DRAINAGE SWALE
- EX DRAINAGE MH
- EX GRATE INLET
- EX FENCE
- EX UTILITY VALVE
- EX WOOD-LINE
- EX UG POWER-LINE
- EX OH POWER-LINE
- EX ELEC BOX
- EX TRANSFORMER
- EX AC UNIT
- EX SIGNAL BOX
- EX GENERATOR
- EX SIGNAL POLE
- EX POWER POLE
- EX LIGHT POLE
- EX GUY WIRE
- EX BLDG AREA
- EX ASPHALT AREA
- EX CONC AREA
- PR ASPHALT AREA
- PR CONC AREA
- PR BLDG
- PR AWNING AREA

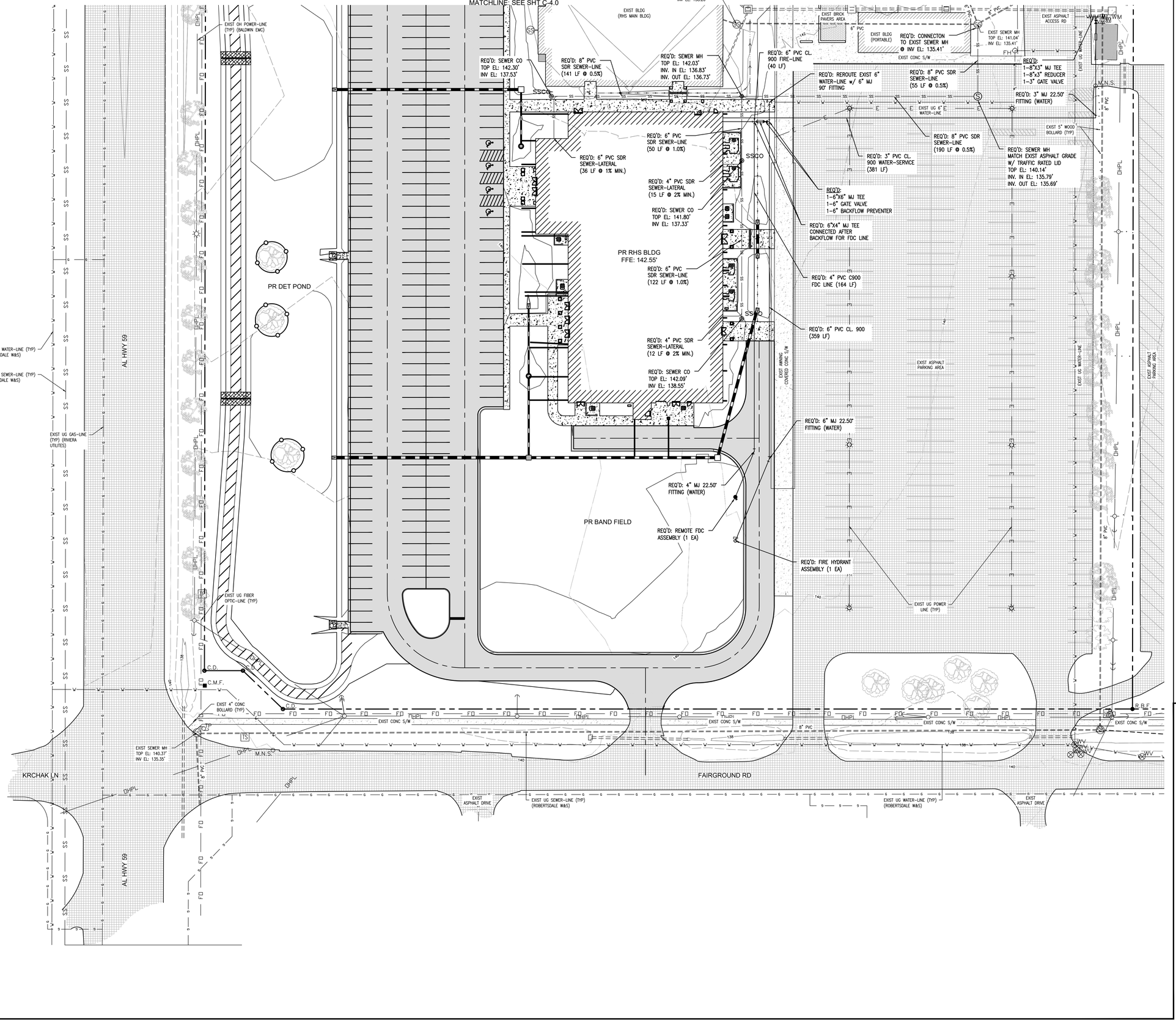

GRAPHIC SCALE

0 15 30 60

1 inch = 30 feet

ADDITIONS TO ROBERTSDALE HIGH SCHOOL

ROBERTSDALE, ALABAMA

FOR THE

BALDWIN COUNTY BOARD OF EDUCATION

McKEE & ASSOCIATES
ARCHITECTS, INC.
631 SOUTH HULL STREET, MONTGOMERY, ALABAMA 36104 (334) 834-9933

Sawgrass
ENGINEERING · SURVEYING · CONSTRUCTION MANAGEMENT
30873 Hgt 71 · Stone Thomas Drive, Spanish Fort, AL 36527 · Phone: (251) 544-7600

ALABAMA LICENSED PROFESSIONAL ENGINEER 31521 10-11-23 William H. Robertson, III

SHEET TITLE : UTILITY PLAN 2

MCKEE JOB # : 23-195

DRAWN BY : BAT

DATE: 10-11-23

REVISED DATE:

REVISED DATE:

REVISED DATE:

SHEET NO. : C-4.1

- S:\1-Clients\23-117 '23 Additions to Robertsdale HS McKee\CIVIL ENGINEERING\PRODUCTION DWGS\GEO-UTIL PLAN.dwg
- Friday, October 13, 2023 11:53:02 AM

LEGEND

- ROW-PROP LINE
- EX WATER-LINE
- EX WATER VALVE
- EX FIRE HYDRANT
- EX WATER METER
- PR WATER-LINE
- PR FIRE HYDRANT
- PR FDC
- EX SEWER-LINE
- EX SEWER MH
- PR-SEWER-LINE
- PR-SEWER MH
- PR-SEWER CO
- EX FIBER-LINE
- EX TEL PED
- EX DRAINAGE PIPE
- PR DRAINAGE SWALE
- EX DRAINAGE MH
- EX GRATE INLET
- EX FENCE
- EX UTILITY VALVE
- EX WOOD-LINE
- EX UG POWER-LINE
- EX OH POWER-LINE
- EX ELEC BOX
- EX TRANSFORMER
- EX AC UNIT
- EX SIGNAL BOX
- EX GENERATOR
- EX SIGNAL POLE
- EX POWER POLE
- EX LIGHT POLE
- EX GUY WIRE
- EX BLDG AREA
- EX ASPHALT AREA
- EX CONC AREA
- PR ASPHALT AREA
- PR CONC AREA
- PR BLDG
- PR AWNING AREA

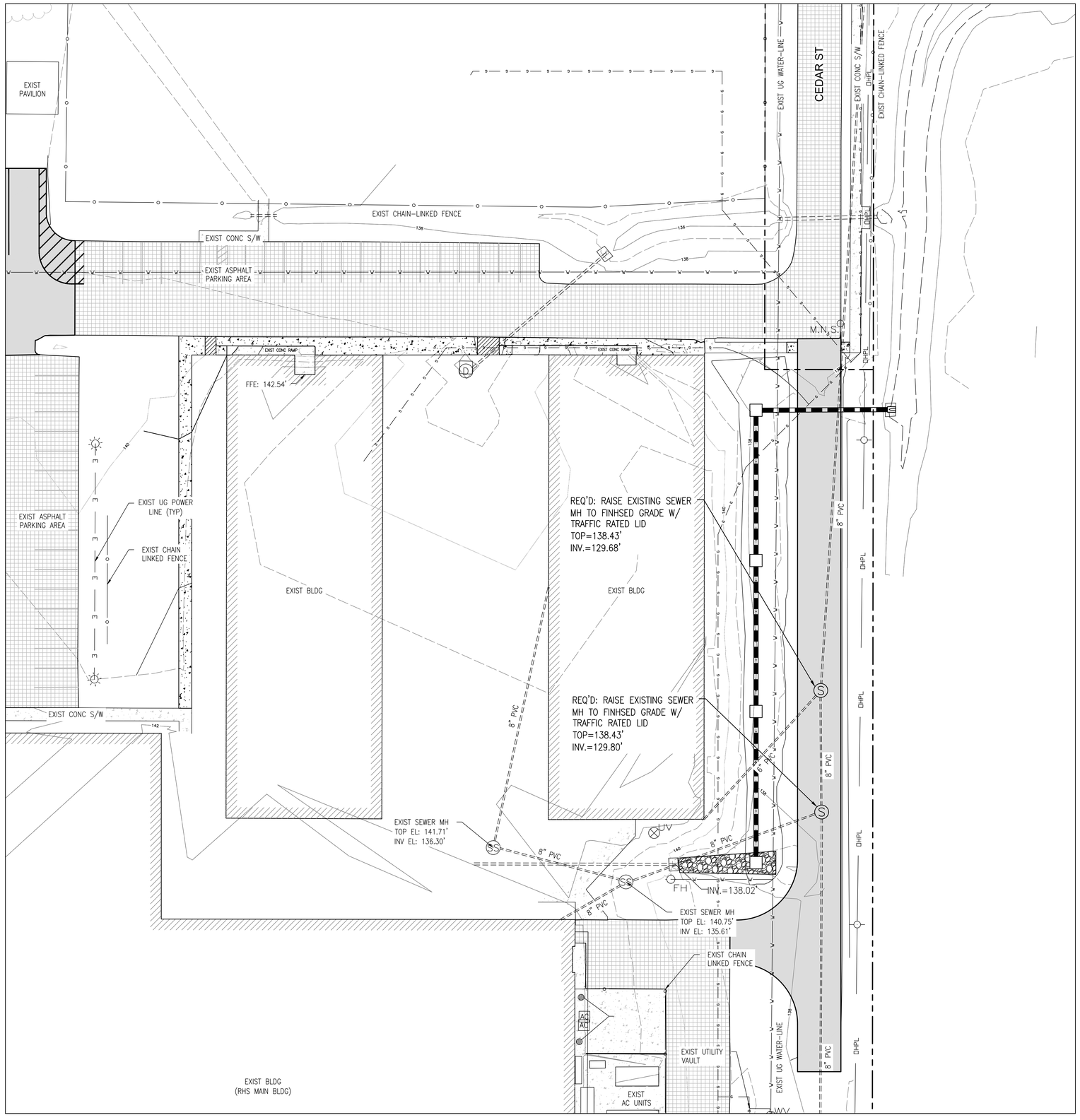

GRAPHIC SCALE

0 15 30 60

1 inch = 30 feet

ADDITIONS

TO

ROBERTSDALE HIGH SCHOOL

ROBERTSDALE, ALABAMA

FOR THE

BALDWIN COUNTY BOARD OF EDUCATION

McKEE & ASSOCIATES
ARCHITECTS, INC.
631 SOUTH HULL STREET, MONTGOMERY, ALABAMA 36104 (334) 834-9933

Sawgrass
ENGINEERING - SURVEYING - CONSTRUCTION MANAGEMENT
30073 Sgt E. T. "Buck" Thomas Drive, Spanish Fort, AL 36527
Phone: (251) 544-7600

ALABAMA LICENSED PROFESSIONAL ENGINEER 10-11-23 James H. Robertson, II

SHEET TITLE :	UTILITY PLAN 3
MCKEE JOB # :	23-195
DRAWN BY :	BAT
DATE:	10-11-23
REVISED DATE:	
REVISED DATE:	
REVISED DATE:	

SHEET NO. : C-4.2

- S:\1-Clients\23-117 '23 Additions to Robertsdale HS McKee\CIVIL ENGINEERING\PRODUCTION DWGS\GEO-UTIL PLAN.dwg
- Friday, October 13, 2023 11:53:12 AM

ADDITIONS
TO
ROBERTSDALE HIGH SCHOOL
ROBERTSDALE, ALABAMA
FOR THE
BALDWIN COUNTY BOARD OF EDUCATION

McKEE & ASSOCIATES
ARCHITECTS, INC.
631 SOUTH HULL STREET, MONTGOMERY, ALABAMA 36104 (334) 834-9933

SAWGRASS ENGINEERING - SURVEYING - CONSTRUCTION MANAGEMENT
30873 SR 1 "Baldwin" Tunnel Drive, Spanish Fort, AL 36527 Phone: (251) 544-7600

SHEET TITLE : GRADING & DRAINAGE PLAN 1

MCKEE JOB # : 23-195

DRAWN BY : BAT

DATE: 10-11-23

REVISED DATE:

REVISED DATE:

REVISED DATE:

SHEET NO. : C-5.0

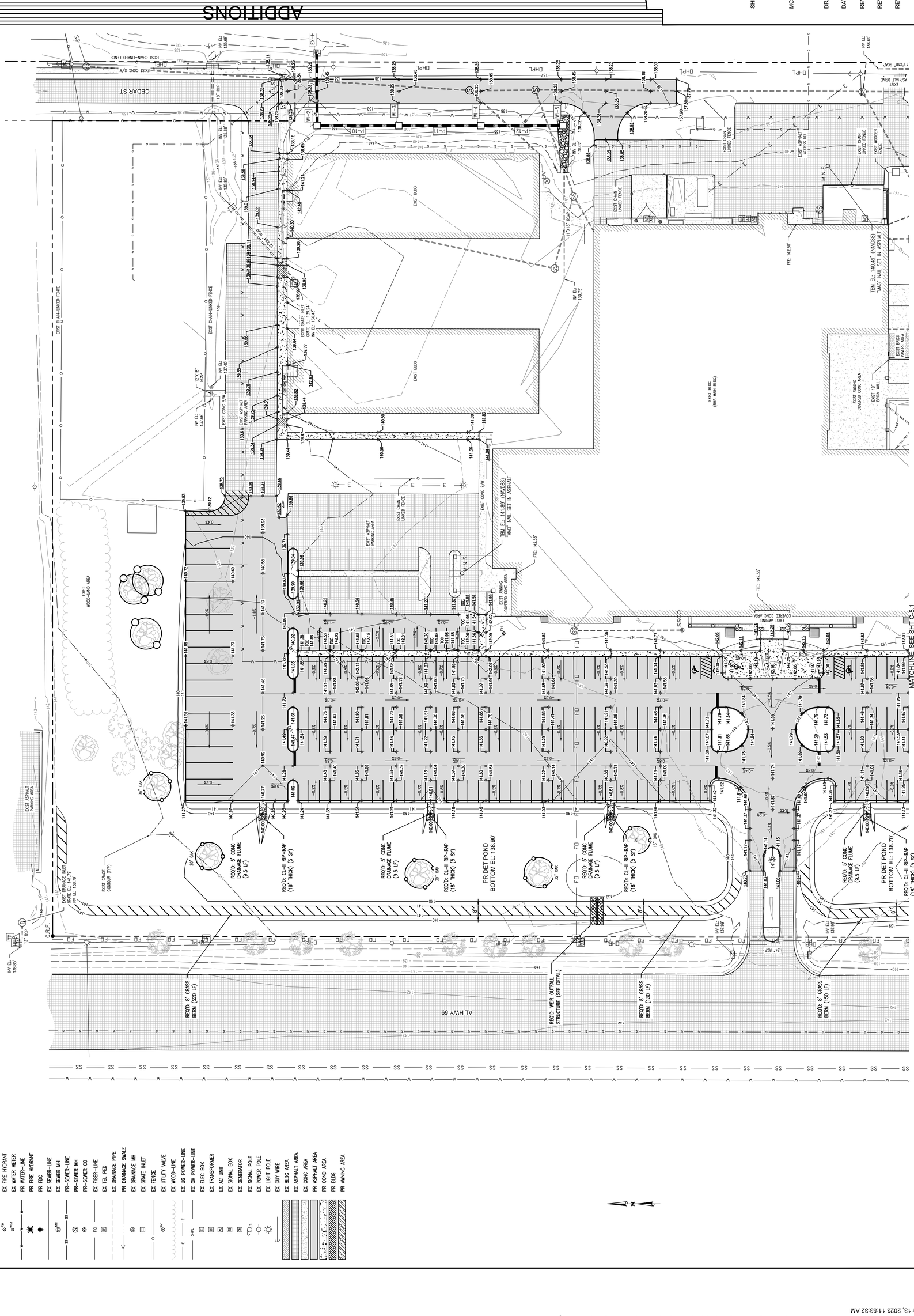
CEDAR ST
AL HWY 59
EXIST WOOD LAND AREA
EXIST ASPHALT PARKING AREA
EXIST BLDG
EXIST BLDG (RHS MAIN BLDG)
EXIST CHAIN-LINKED FENCE
EXIST CONC S/W
EXIST ASPHALT PARKING AREA
EXIST GRADE CONTOUR (TYP)
EXIST DRAINAGE INLET GRATE EL: 141.79 INV EL: 138.79
EXIST GRATE INLET GRATE EL: 139.24 INV EL: 134.74
EXIST CURB INLET INV EL: 137.99
EXIST CURB INLET INV EL: 137.99
EXIST CURB INLET INV EL: 138.69
EXIST CURB INLET INV EL: 139.69
EXIST CURB INLET INV EL: 135.66
EXIST CURB INLET INV EL: 135.65
EXIST CURB INLET INV EL: 135.65
EXIST CURB INLET INV EL: 135.65

LEGEND

- ROW–PROP LINE
- EX WATER–LINE
- EX WATER VALVE
- EX FIRE HYDRANT
- EX WATER METER
- PR WATER–LINE
- PR FIRE HYDRANT
- PR FDC
- EX SEWER–LINE
- EX SEWER MH
- PR–SEWER–LINE
- PR–SEWER MH
- PR–SEWER CO
- EX FIBER–LINE
- EX TEL PED
- EX DRAINAGE PIPE
- PR DRAINAGE SWALE
- EX DRAINAGE MH
- EX GRATE INLET
- EX FENCE
- EX UTILITY VALVE
- EX WOOD–LINE
- EX UG POWER–LINE
- EX OH POWER–LINE
- EX ELEC BOX
- EX TRANSFORMER
- EX AC UNIT
- EX SIGNAL BOX
- EX GENERATOR
- EX SIGNAL POLE
- EX POWER POLE
- EX LIGHT POLE
- EX GUY WIRE
- EX BLDG AREA
- EX ASPHALT AREA
- EX CONC AREA
- PR ASPHALT AREA
- PR CONC AREA
- PR BLDG
- PR AWNING AREA

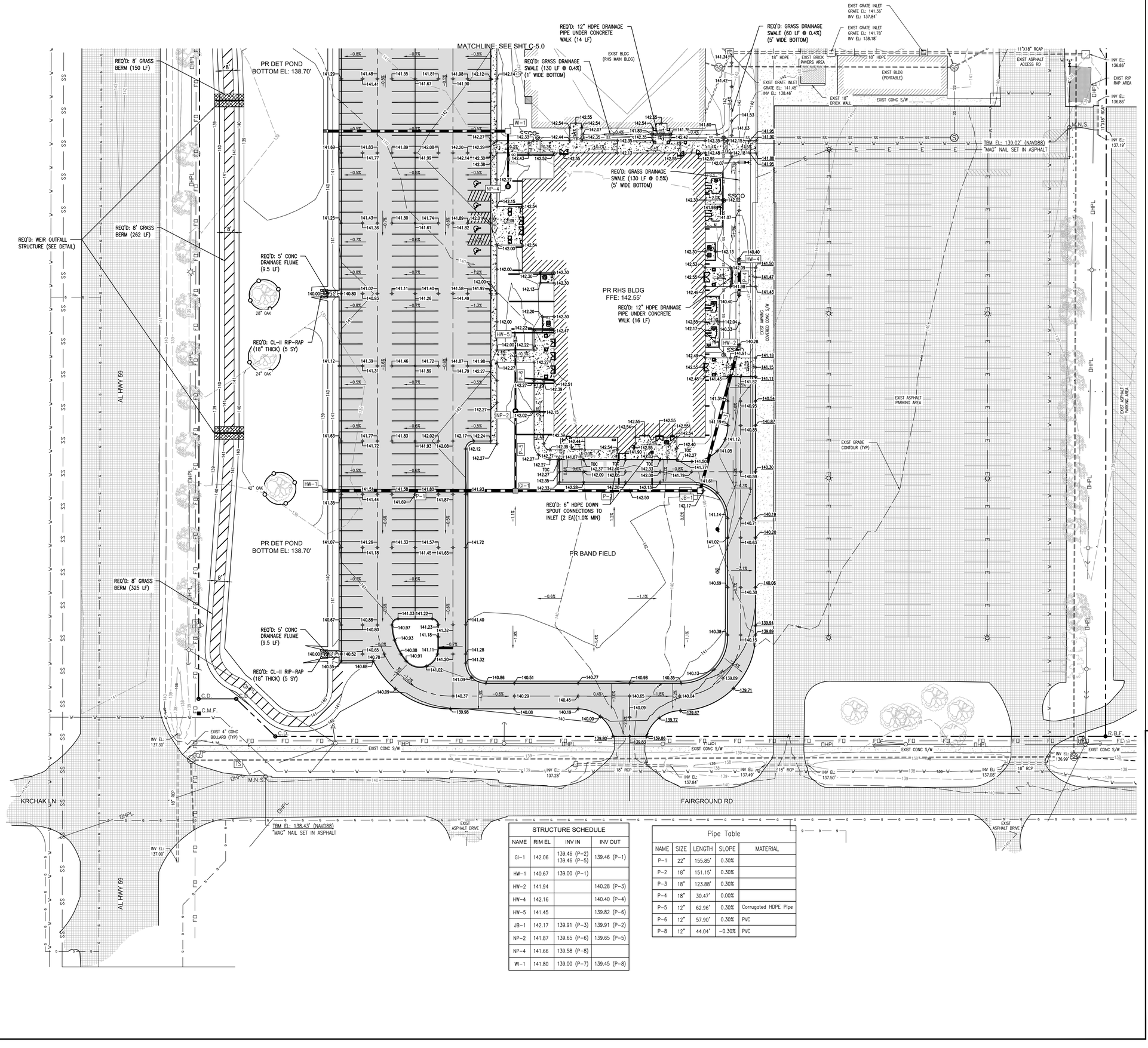

STRUCTURE SCHEDULE

NAME	RIM EL	INV IN	INV OUT
GI–1	142.06	139.46 (P–2) 139.46 (P–5)	139.46 (P–1)
HW–1	140.67	139.00 (P–1)	
HW–2	141.94		140.28 (P–3)
HW–4	142.16		140.40 (P–4)
HW–5	141.45		139.82 (P–6)
JB–1	142.17	139.91 (P–3)	139.91 (P–2)
NP–2	141.87	139.65 (P–6)	139.65 (P–5)
NP–4	141.66	139.58 (P–8)	
WI–1	141.80	139.00 (P–7)	139.45 (P–8)

Pipe Table

NAME	SIZE	LENGTH	SLOPE	MATERIAL
P–1	22"	155.85'	0.30%	
P–2	18"	151.15'	0.30%	
P–3	18"	123.88'	0.30%	
P–4	18"	30.47'	0.00%	
P–5	12"	62.96'	0.30%	Corrugated HDPE Pipe
P–6	12"	57.90'	0.30%	PVC
P–8	12"	44.04'	-0.30%	PVC

GRAPHIC SCALE

0 15 30 60

1 inch = 30 feet

ADDITIONS TO ROBERTSDALE HIGH SCHOOL

ROBERTSDALE, ALABAMA

FOR THE

BALDWIN COUNTY BOARD OF EDUCATION

Sawgrass ENGINEERING · SURVEYING · CONSTRUCTION MANAGEMENT
3903 Fall 1 - 1 Stone Thomas Drive, Spanish Fort, AL 36527 Phone: (251) 544-7600

McKEE & ASSOCIATES
ARCHITECTS, INC.
631 SOUTH HULL STREET, MONTGOMERY, ALABAMA 36104 (334) 834-9933

ALABAMA LICENSED PROFESSIONAL ENGINEER 31911 10-11-23 James H. Robertson, II

SHEET TITLE : GRADING & DRAINAGE PLAN 2

MCKEE JOB # : 23-195

DRAWN BY : BAT

DATE: 10-11-23

REVISED DATE:

REVISED DATE:

REVISED DATE:

SHEET NO. : C-5.1

- S:\1-Clients\23-117 '23 Additions to Robertsdale HS McKee\CIVIL ENGINEERING\PRODUCTION DWGS\GRADING-DRAINAGE-EC PLAN.dwg
- Friday, October 13, 2023 11:53:44 AM

LEGEND

- ROW-PROP LINE
- EX WATER-LINE
- EX WATER VALVE
- EX FIRE HYDRANT
- EX WATER METER
- PR WATER-LINE
- PR FIRE HYDRANT
- PR FDC
- EX SEWER-LINE
- EX SEWER MH
- PR-SEWER-LINE
- PR-SEWER MH
- PR-SEWER CO
- EX FIBER-LINE
- EX TEL PED
- EX DRAINAGE PIPE
- PR DRAINAGE SWALE
- EX DRAINAGE MH
- EX GRATE INLET
- EX FENCE
- EX UTILITY VALVE
- EX WOOD-LINE
- EX UG POWER-LINE
- EX OH POWER-LINE
- EX ELEC BOX
- EX TRANSFORMER
- EX AC UNIT
- EX SIGNAL BOX
- EX GENERATOR
- EX SIGNAL POLE
- EX POWER POLE
- EX LIGHT POLE
- EX GUY WIRE
- EX BLDG AREA
- EX ASPHALT AREA
- EX CONC AREA
- PR ASPHALT AREA
- PR CONC AREA
- PR BLDG
- PR AWNING AREA

STRUCTURE SCHEDULE			
NAME	RIM EL	INV IN	INV OUT
EX-HW	135.99	134.32 (P-9)	
WI-2	137.19	134.50 (P-10)	134.50 (P-9)
WI-3	137.35	134.69 (P-11)	134.69 (P-10)
WI-4	137.51	134.88 (P-12)	134.88 (P-11)
WI-5	137.67		135.07 (P-12)

Pipe Table				
NAME	SIZE	LENGTH	SLOPE	MATERIAL
P-9	18"	59.28'	0.30%	
P-10	18"	63.67'	0.30%	
P-11	18"	64.01'	0.30%	
P-12	18"	64.10'	0.30%	

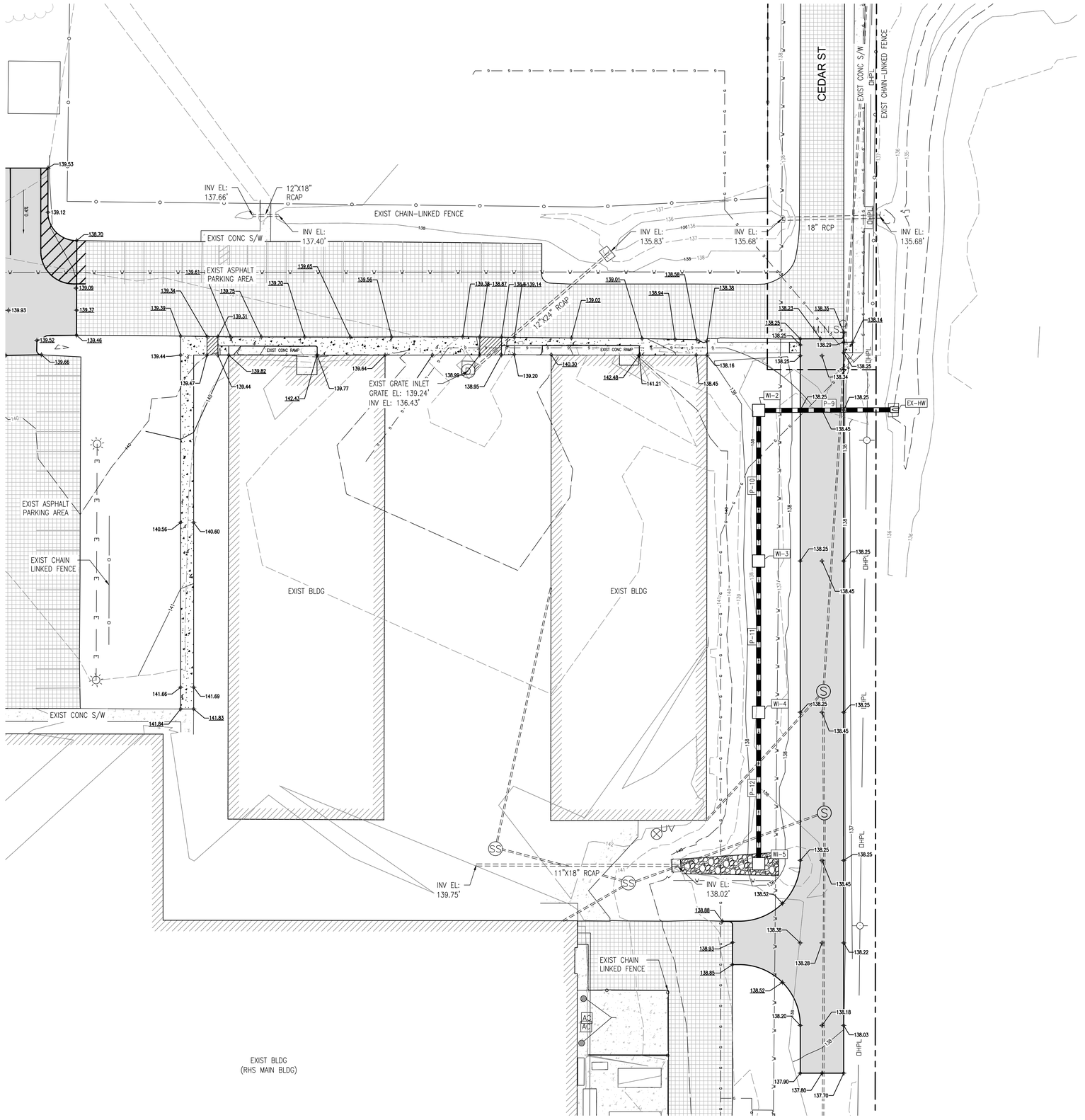

GRAPHIC SCALE

0 15 30 60

1 inch = 30 feet

ADDITIONS

TO

ROBERTSDALE HIGH SCHOOL

ROBERTSDALE, ALABAMA

FOR THE

BALDWIN COUNTY BOARD OF EDUCATION

McKEE & ASSOCIATES
ARCHITECTS, INC.
631 SOUTH HULL STREET, MONTGOMERY, ALABAMA 36104 (334) 834-9933

Sawgrass
ENGINEERING - SURVEYING - CONSTRUCTION MANAGEMENT
30673 Sgt E. T. "Boots" Thomas Drive, Spanish Fort, AL 36527
Phone: (251) 544-7600

ALABAMA LICENSED PROFESSIONAL ENGINEER 10-11-23 James H. Robertson II

SHEET TITLE : GRADING & DRAINAGE PLAN 3

MCKEE JOB # : 23-195

DRAWN BY : BAT

DATE: 10-11-23

REVISED DATE:

REVISED DATE:

REVISED DATE:

SHEET NO. : C-5.2

- S:\1-Clients\23-117 '23 Additions to Robertsdale HS McKee\CIVIL ENGINEERING\PRODUCTION DWGS\GRADING-DRAINAGE-EC PLAN.dwg
- Friday, October 13, 2023 11:54:12 AM

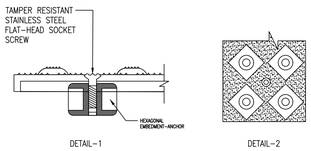

"ARMOR TILE-REPLACEMENT" FOR NEW CONSTRUCTION
N.T.S.

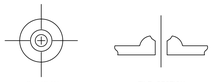



SECTION A-A
N.T.S.

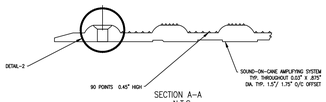

SECTION A-A
N.T.S.

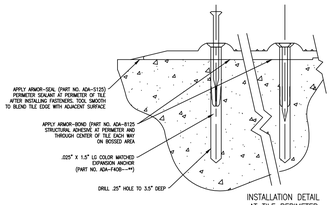

INSTALLATION DETAIL AT TILE PERIMETER
N.T.S.

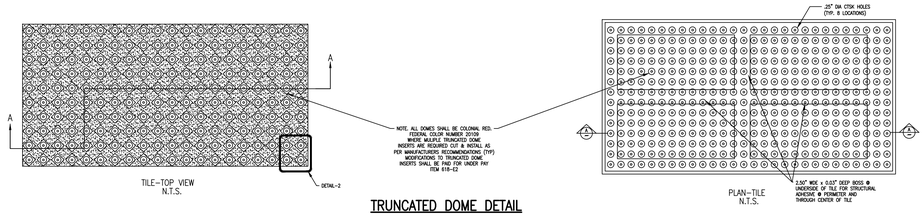

TRUNCATED DOME DETAIL
N.T.S.

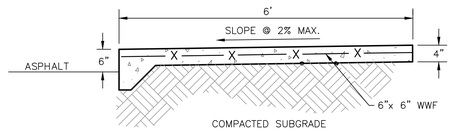

COMPACTED SUBGRADE

RAISED
CONCRETE SIDEWALK
N.T.S.

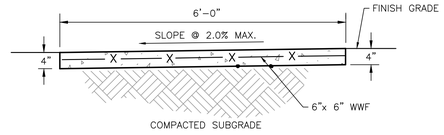

COMPACTED SUBGRADE

FLUSH
CONCRETE SIDEWALK
N.T.S.

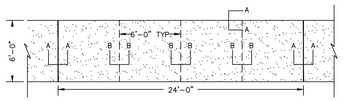

NOTES:

1. PROVIDE 6 FEET BETWEEN CONTROL JOINTS AND 24 FEET BETWEEN EXPANSION JOINTS.
2. ALL EXPANSION JOINTS SHALL BE 1/2" THICK, NEOPRENE MATERIAL.
3. EXPANSION MATERIAL TO BE USED AT ALL PC'S, PT'S AND STRUCTURES.

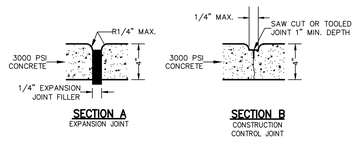

CONCRETE WALK DETAIL
N.T.S.

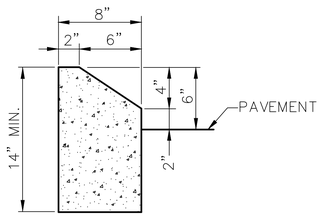

TYPE "N" CONCRETE CURB
N.T.S.
FOR USE ON LANDSCAPE ISLANDS

NOTE:
ALL CONCRETE SHALL BE 3,000 PSI.

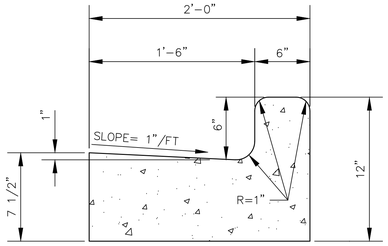

*24" CURB & GUTTER DETAIL
(TYPE "C" MODIFIED)
N.T.S.

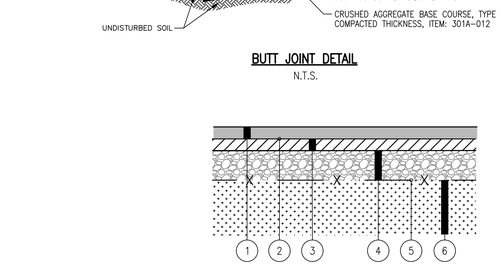

BUTT JOINT DETAIL
N.T.S.

MEDIUM DUTY ASPHALT PAVEMENT SECTION
(FOR USE IN ROAD AREA)
N.T.S.

1. 2" ALDOT SECTION 424A, BITUMINOUS WEARING SURFACE (220 LB/SY - 1/2" MAX AGGREGATE SIZE MIX)
2. ALDOT SECTION 405 TACK COAT
3. 2" ALDOT SECTION 424A, BITUMINOUS WEARING SURFACE (220 LB/SY - 3/4" MAX AGGREGATE SIZE MIX)
4. 6" ALDOT SECTION 825 CRUSHED AGGREGATE BASE MATERIAL (100% STANDARD DENSITY)
5. SEPARATION FABRIC (TERRA TEX GS OR APPROVED EQUAL)
6. BORROW EXCAVATION/18" COMPACTED STRUCTURAL FILL (TOP 6" COMPACTED TO 100% STANDARD DENSITY)

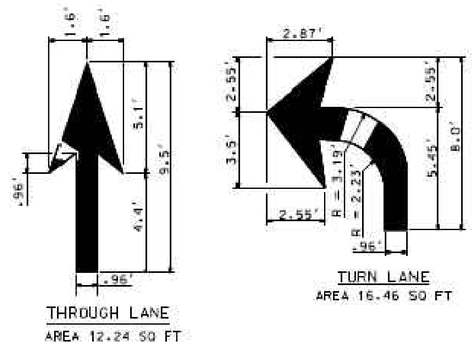

TRAFFIC MARKINGS DETAILS
N.T.S.

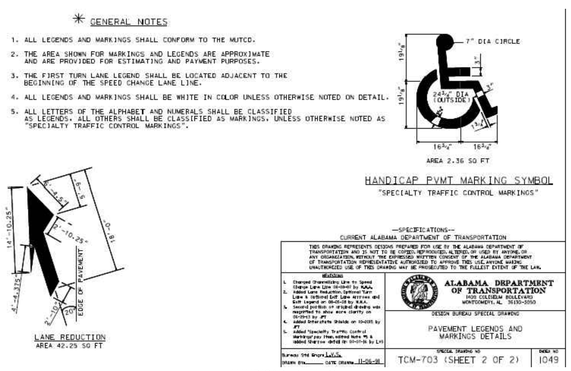

HANDICAP DETAILS
N.T.S.

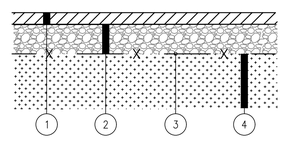

LIGHT DUTY ASPHALT PAVEMENT SECTION
(FOR USE IN PARKING AREA)
N.T.S.

1. 2" ALDOT SECTION 424A, BITUMINOUS WEARING SURFACE (220 LB/SY - 1/2" MAX AGGREGATE SIZE MIX)
2. 6" ALDOT SECTION 825 CRUSHED AGGREGATE BASE MATERIAL (100% STANDARD DENSITY)
3. SEPARATION FABRIC (TERRA TEX GS OR APPROVED EQUAL)
4. BORROW EXCAVATION/18" COMPACTED STRUCTURAL FILL (TOP 6" COMPACTED TO 100% STANDARD DENSITY)

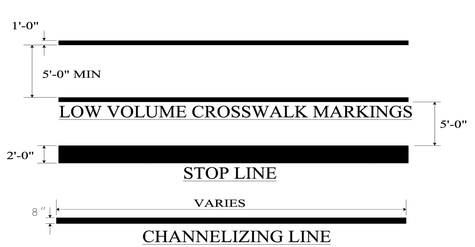

STRIPING LEGEND DETAILS
N.T.S.

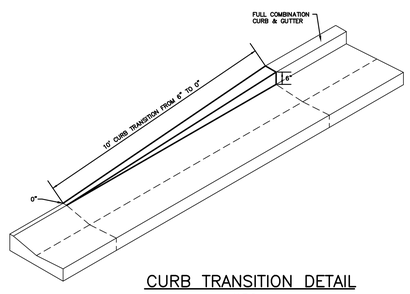

CURB TRANSITION DETAIL
N.T.S.

ADDITIONS
TO
ROBERTSDALE HIGH SCHOOL
ROBERTSDALE, ALABAMA
FOR THE
BALDWIN COUNTY BOARD OF EDUCATION

Sawgrass
ENGINEERING - SURVEYING - CONSTRUCTION MANAGEMENT
30873 Fgt 5 - 1 Boone Thomas Drive, Spanish Fort, AL 36527
Phone: (251) 544-7600

McKEE & ASSOCIATES, INC.
ARCHITECTS
631 SOUTH HULL STREET . MONTGOMERY . ALABAMA 36104 (334) 834-9933

NOT VALID UNLESS SIGNED, DATED AND SEALED
ALABAMA LICENSED PROFESSIONAL ENGINEER
William H. Robertson, II

SHEET TITLE : CIVIL CONSTRUCTION DETAILS 1

MCKEE JOB # : 23-195

DRAWN BY : BAT

DATE: 10-11-23

REVISED DATE:

REVISED DATE:

REVISED DATE:

SHEET NO. : C-6.0

- S:\1-Clients\23-117 '23 Additions to Robertsdale HS McKee\CIVIL ENGINEERING\PRODUCTION DWGS\NOTES-DETAILS.dwg
- Friday, October 13, 2023 11:54:23 AM

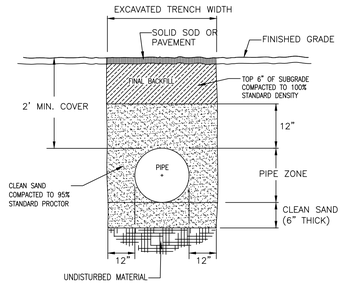

PIPE TRENCH BACKFILL DETAIL

N.T.S.

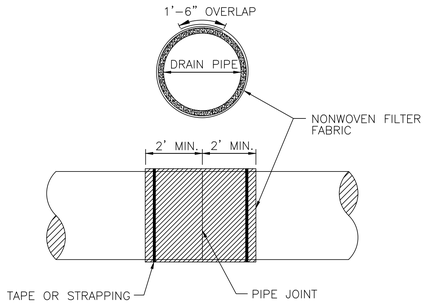

NOTE:
JOINTS ON ALL STORM DRAIN PIPES SHALL BE PIPE WRAPPED WITH A NON-WOVEN FILTER FABRIC AS SHOWN IN THIS DETAIL.

PIPE JOINT WRAP

N.T.S.

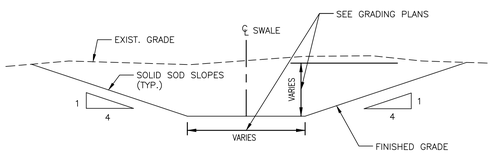

DRAINAGE SWALE DETAIL

N.T.S.

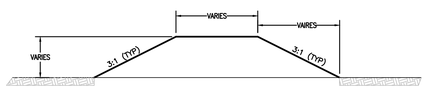

BERM DETAIL

N.T.S.

NYLOPLAST TURF TRAFFIC INSTALLATION

12" - 30" DRAIN BASIN

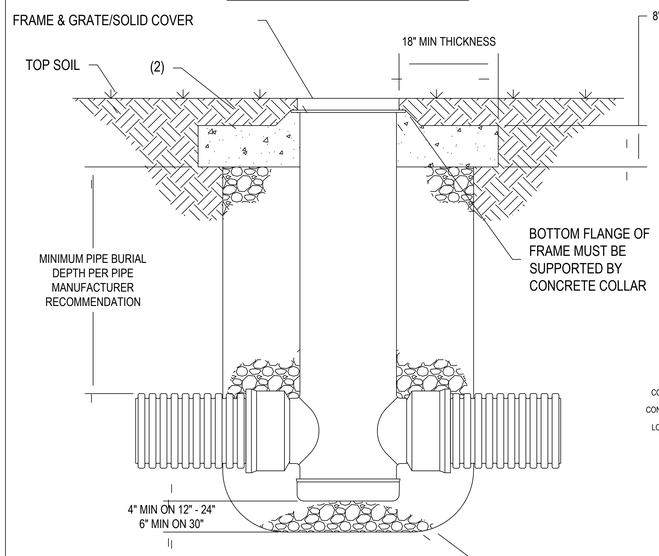

12" - 30" INLINE DRAIN

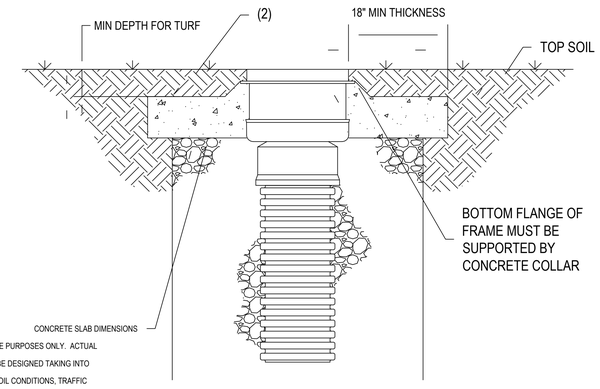

TRAFFIC LOADS: CONCRETE SLAB DIMENSIONS ARE FOR GUIDELINE PURPOSES ONLY. ACTUAL CONCRETE SLAB MUST BE DESIGNED TAKING INTO CONSIDERATION LOCAL SOIL CONDITIONS, TRAFFIC LOADING, & OTHER APPLICABLE DESIGN FACTORS.

THE BACKFILL MATERIAL SHALL BE CRUSHED STONE OR OTHER GRANULAR MATERIAL MEETING THE REQUIREMENTS OF CLASS I, CLASS II, OR CLASS III MATERIAL AS DEFINED IN ASTM D2321. BEDDING & BACKFILL FOR SURFACE DRAINAGE INLETS SHALL BE PLACED & COMPACTED UNIFORMLY IN ACCORDANCE WITH ASTM D2321.

1. GRATES/SOLID COVERS SHALL MEET H-20 LOAD RATING FOR 30" PEDESTRIAN & 12" - 30" STANDARD & SOLID
2. DESIGN SHOULD ACCOUNT FOR ROOT DEPTH TO ALLOW TURF TO GROW AND PREVENT EROSION AROUND GRATE SO THAT HAZARDS DO NOT FORM.

THIS PRINT DISCLOSES SUBJECT MATTER IN WHICH NYLOPLAST HAS PROPRIETARY RIGHTS. THE RECEIPT OR POSSESSION OF THIS PRINT DOES NOT CONFER, TRANSFER, OR LICENSE THE USE OF THE DESIGN OR TECHNICAL INFORMATION SHOWN HEREIN REPRODUCTION OF THIS PRINT OR ANY INFORMATION CONTAINED HEREIN, OR MANUFACTURE OF ANY ARTICLE HEREFROM, FOR THE DISCLOSURE TO OTHERS IS FORBIDDEN, EXCEPT BY SPECIFIC WRITTEN PERMISSION FROM NYLOPLAST. 2013 NYLOPLAST

DRAWN BY	EBC	MATERIAL	Nyloplast® 3130 VERONA AVE BUFORD, GA 30518 PHN (770) 932-2443 FAX (770) 932-2490 www.nyloplast-us.com
DATE	01-05-09		
REVISED BY	NMH	PROJECT NO./NAME	TITLE: 12 IN - 30 IN DRAIN BASIN & INLINE DRAIN TURF TRAFFIC INSTALLATION
DATE	03-14-16		
DWG SIZE	A	SCALE 1:25 SHEET 1 OF 1	DWG NO. 7001-110-340 REV F

NYLOPLAST INLET DETAILS

N.T.S.

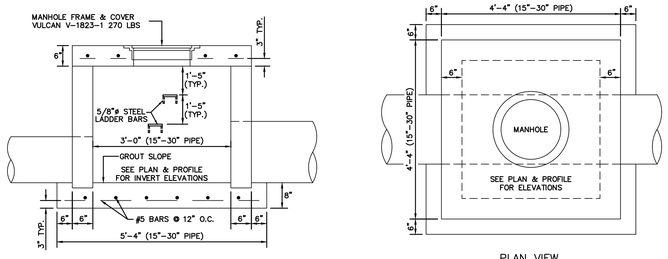

TYPICAL SECTION

PLAN VIEW

JUNCTION BOX DETAIL

N.T.S.

NOTE: STEPS REQUIRED FOR BOX HEIGHTS 4'-0" AND GREATER.

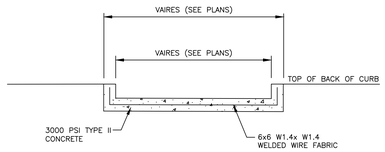

FLUME SECTION

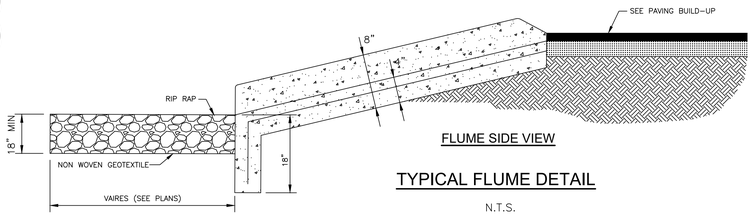

FLUME SIDE VIEW

TYPICAL FLUME DETAIL

N.T.S.

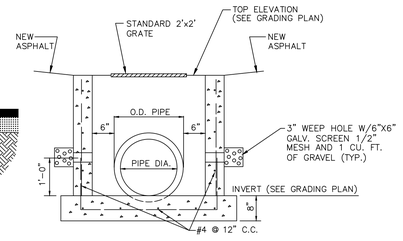

SECTION A-A

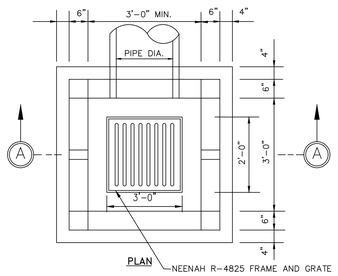

CONCRETE GRATE INLET DETAIL

N.T.S.

ADDITIONS
TO
ROBERTSDALE HIGH SCHOOL
ROBERTSDALE, ALABAMA
FOR THE
BALDWIN COUNTY BOARD OF EDUCATION

McKEE & ASSOCIATES
ARCHITECTS, INC.
631 SOUTH HULL STREET - MONTGOMERY - ALABAMA 36104 (334) 834-9933

Sawgrass
ENGINEERING - SURVEYING - CONSTRUCTION MANAGEMENT
3909 Fgt. E. 1 "Bone" Thomas Drive, Spanish Fort, AL 36527 Phone: (251) 544-7600

ALABAMA LICENSED PROFESSIONAL ENGINEER James H. Roberson, Jr. 31201

SHEET TITLE : CIVIL CONSTRUCTION DETAILS 2

MCKEE JOB # : 23-195

DRAWN BY : BAT

DATE: 10-11-23

REVISED DATE:

REVISED DATE:

REVISED DATE:

SHEET NO. : C-6.1

- S:\1-Clients\23-117 '23 Additions to Robertsdale HS McKee\CIVIL ENGINEERING\PRODUCTION DWGS\NOTES-DETAILS.dwg
- Friday, October 13, 2023 11:54:26 AM

THRUST BLOCK BEARING AREAS (SQ.FT.)						VERTICAL ANCHOR BLOCK VOLUMES		
SIZE	PLUGGED END OR TEE	90° BEND	45° BEND	22-1/2° BEND	11-1/4° BEND	45° VERT. BEND	22-1/2° VERT. BEND	GATE VALVE
2" DIA. PIPE LINE	1.0	1.0	1.0	1.0	1.0	9.3 CU. FT.	4 CU. FT.	0.5 CU. FT.
4" DIA. PIPE LINE	1.9	2.6	1.4	1.0	1.0	21.1 CU. FT.	9.8 CU. FT.	0.8 CU. FT.
6" DIA. PIPE LINE	3.6	5.0	2.7	1.4	1.0	50 CU. FT.	16 CU. FT.	1.0 CU. FT.
8" DIA. PIPE LINE	5.8	8.2	4.4	2.25	1.2			1.5 CU. FT.

NOTE: THRUST BLOCK BEARING AREAS SHALL BE INCREASED IN POOR TRENCH CONDITIONS AS DIRECTED BY THE ENGINEER

DESIGN CRITERIA: TEST PRESSURE – 150 PSI SOIL BEARING PRESSURE – 1 TON PER SQ. FT.

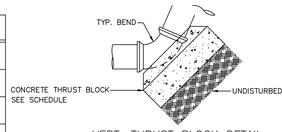

VERT. THRUST BLOCK DETAIL

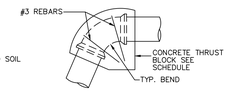

VERT. THRUST BLOCK DETAIL

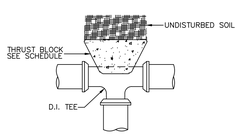

TEE THRUST BLOCK DETAIL

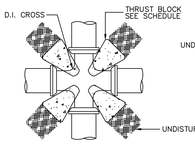

CROSS THRUST BLOCK DETAIL

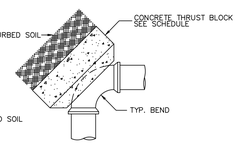

HORIZ. THRUST BLOCK DETAIL

THRUST BLOCK DETAIL

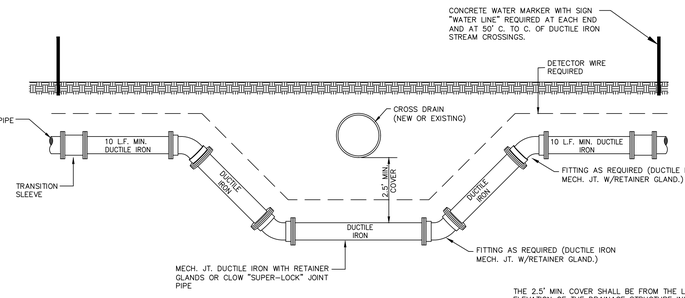

TYPICAL DRAINAGE PIPE CROSSING

NOT TO SCALE

THE 2.5' MIN. COVER SHALL BE FROM THE LOWEST ELEVATION OF THE DRAINAGE STRUCTURE INVERT. THIS ELEVATION SHALL BE MAINTAINED NO LESS THAN 10' EACH SIDE OF THE CROSS DRAIN REGARDLESS OF THE GROUND ELEVATION WHICH MAY RESULT IN COVER DEPTHS SIGNIFICANTLY GREATER THAN THE 2.5' MIN.)

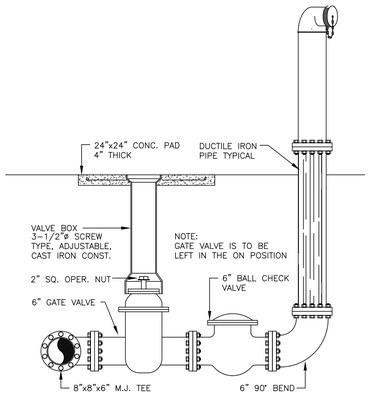

FIRE DEPARTMENT CONNECTION DETAIL

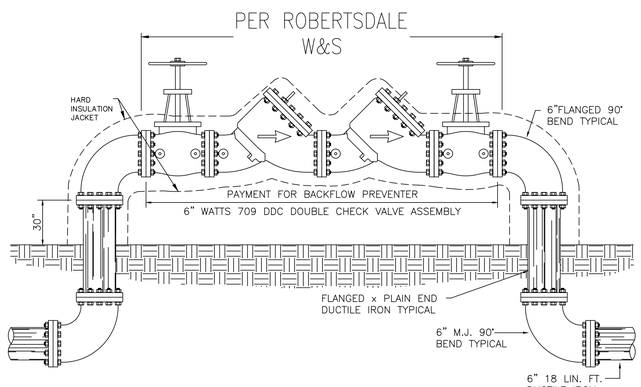

BACKFLOW PREVENTER ASSEMBLY DETAIL FOR FIRE WATER LINE

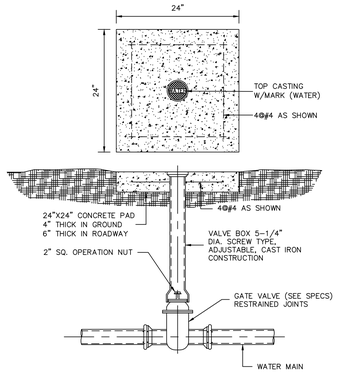

WATER GATE VALVE

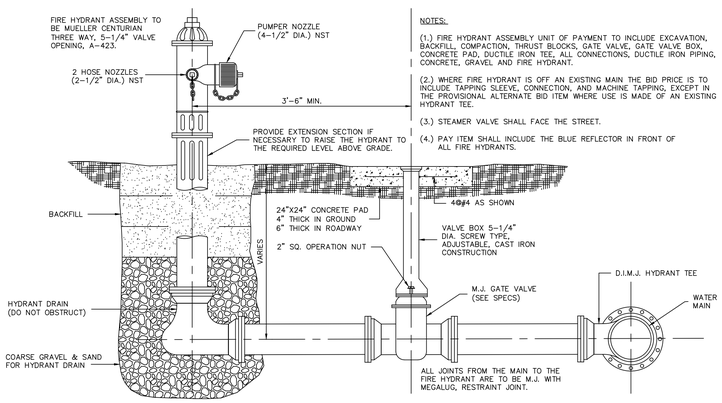

FIRE HYDRANT ASSEMBLY

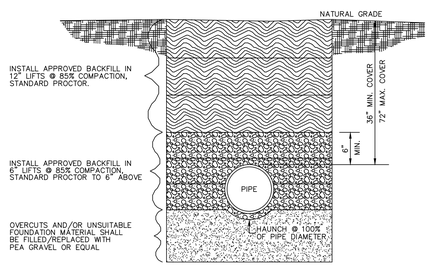

TYPICAL TRENCH DETAIL

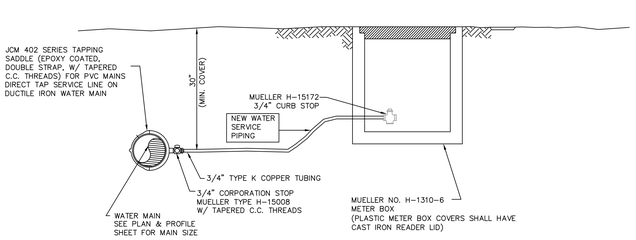

TYPICAL NEW WATER SERVICE CONNECTION FAIRHOPE

NOTE: LOCATION OF EACH WATER SERVICE SHALL BE MARKED IN THE CONCRETE VALLEY GUTTER WITH THE LETTER "W".

ADDITIONS TO ROBERTSDALE HIGH SCHOOL

ROBERTSDALE, ALABAMA

FOR THE

BALDWIN COUNTY BOARD OF EDUCATION

Sawgrass
ENGINEERING - SURVEYING - CONSTRUCTION MANAGEMENT
Phone: (251) 544-7600
30873 Fgt 1, 1 Boone Thomas Drive, Spanish Fort, AL 36527

McKEE & ASSOCIATES
ARCHITECTS, INC.
631 SOUTH HULL STREET, MONTGOMERY, ALABAMA 36104 (334) 834-9933

ALABAMA LICENSED PROFESSIONAL ENGINEER 24 31247 10-11-23 James H. Robertson

SHEET TITLE : WATER DETAILS

MCKEE JOB # : 23-195

DRAWN BY : BAT

DATE: 10-11-23

REVISED DATE:

REVISED DATE:

REVISED DATE:

SHEET NO. : C-6.2

- S:\1-Clients\23-117 '23 Additions to Robertsdale HS McKee\CIVIL ENGINEERING\PRODUCTION DWGS\NOTES-DETAILS.dwg
- Friday, October 13, 2023 11:54:30 AM

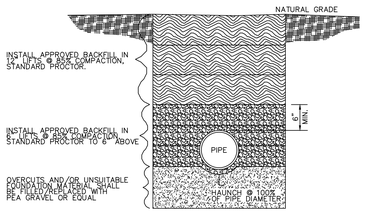

TYPICAL TRENCH DETAIL

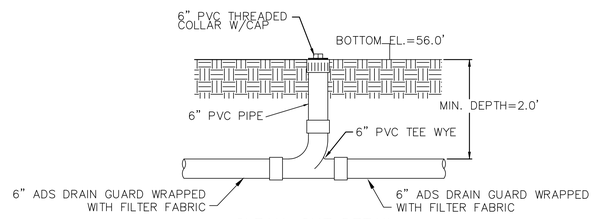

CLEAN-OUT DETAIL

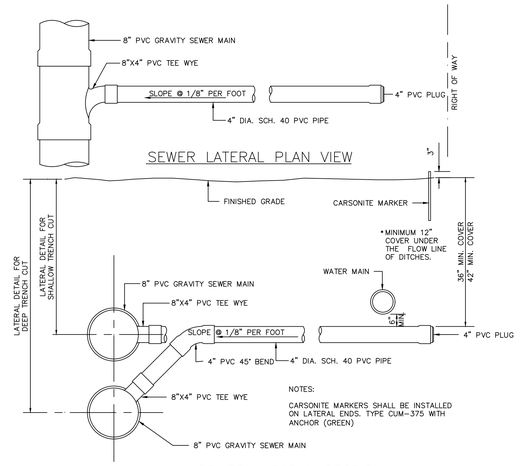

SEWER LATERAL SECTION

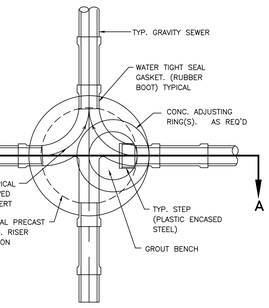

PLAN VIEW

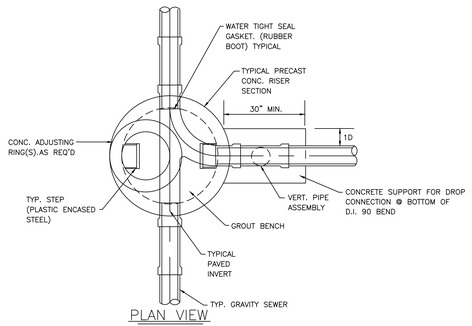

PLAN VIEW

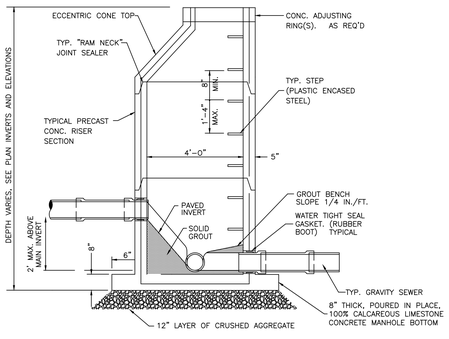

TYPICAL PRECAST CONCRETE MANHOLE

SECTION A-A

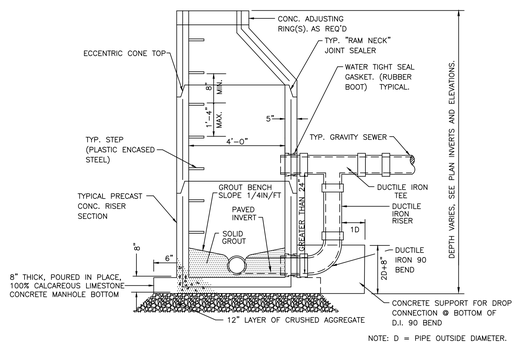

NOTE: D = PIPE OUTSIDE DIAMETER.

TYPICAL PRECAST CONCRETE DROP MANHOLE

SECTION A-A

GENERAL NOTES:

- ALL PRECAST REINFORCED CONCRETE MANHOLE SECTIONS SHALL CONFORM TO ASTM C 478.
- WHEN SHORT MANHOLE SECTIONS ARE USED UNDER PAVED AREAS THE CONTRACTOR SHALL SUBMIT SHOP DRAWINGS AND CALCULATIONS FOR THE REINFORCING REQUIRED TO SUPPORT THE TRAFFIC LOAD
- ALL MANHOLES SHALL BE CONSTRUCTED USING TYPE 2 CEMENT, AND 100% CALCAREOUS AGGREGATE
- GROUT MANHOLE RING TO MANHOLE SECTION INSIDE & OUT AS APPROVED BY THE ENG.
- THE 1ST MANHOLE STEP SHALL NOT BE MORE THAN 15" FROM THE TOP OF THE MANHOLE.
- SPECIFICATIONS:

MODEL: VULCAN FOUNDRY V-1418 –1 TYPE 1 PICK HOLE

COVER WEIGHT	130 LBS.
RING WEIGHT	280 LBS.
TOTAL WEIGHT	410 LBS.

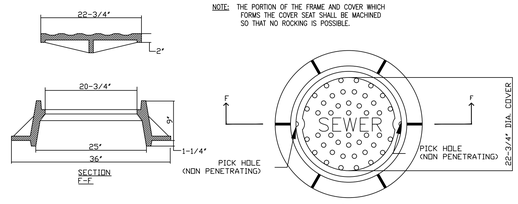

THE RING AND COVER SHALL MEET THE REQUIREMENTS OF THE CITY OF FAIRHOPE SANITARY SEWER SPECIFICATIONS. THIS IS TO INCLUDE THE LABEL ON THE MANHOLE COVER.

MANHOLE FRAME & COVER DETAIL

ADDITIONS
TO
ROBERTSDALE HIGH SCHOOL
ROBERTSDALE, ALABAMA
FOR THE
BALDWIN COUNTY BOARD OF EDUCATION

McKEE & ASSOCIATES
ARCHITECTS, INC.
631 SOUTH HULL STREET, MONTGOMERY, ALABAMA 36104 (334) 834-9933

Sawgrass
ENGINEERING - SURVEYING - CONSTRUCTION MANAGEMENT
3909 Fairfield Court • Spanish Fort, AL 36527 Phone: (251) 544-7600

ALABAMA LICENSED PROFESSIONAL ENGINEER 31211 10-11-23 JAMES H. ROBINSON, III

SHEET TITLE : SEWER DETAILS

MCKEE JOB # : 23-195

DRAWN BY : BAT

DATE: 10-11-23

REVISED DATE:

REVISED DATE:

REVISED DATE:

SHEET NO. : C-6.3

- S:\1-Clients\23-117 '23 Additions to Robertsdale HS McKee\CIVIL ENGINEERING\PRODUCTION DWGS\NOTES-DETAILS.dwg
- Friday, October 13, 2023 11:54:35 AM

LEGEND

- PR INLET PROTECTION
- PR DITCH CHECK WATTLE
- PR CONC WASHOUT
- PR SILT FENCE
- PR CONSTRUCTION ENTRANCE
- PR SOD & TOPSOIL AREA

SOIL EROSION & SEDIMENT CONTROL NOTES:

1. ALL EROSION AND SEDIMENT CONTROL PRACTICES MUST BE IN ACCORDANCE WITH THE ALABAMA HANDBOOK FOR EROSION CONTROL, SEDIMENT CONTROL AND STORM WATER MANAGEMENT FOR CONSTRUCTION SITES AND URBAN AREAS, VOLUME 1 AND 2, LATEST EDITION.
2. THE MEASURES SET FORTH IN THE EROSION CONTROL PLAN ARE INTENDED AS THE MINIMUM STANDARDS, ANY EROSION CONTROL MEASURE BEYOND THAT SPECIFIED IN THE PLAN, THAT IS REQUIRED TO COMPLY WITH LOCAL, STATE, AND FEDERAL LAW, SHALL BE IMPLEMENTED.
3. IN THE EVENT THAT EROSION PREVENTION AND CONTROL DEVICES SHOWN IN THE EROSION CONTROL PLAN PROVE NOT TO BE EFFECTIVE, ALTERNATE METHODS FOR MAINTAINING STATE WATER QUALITY STANDARDS FOR DISCHARGE FROM THE CONSTRUCTION SITE WILL BE REQUIRED. ALL ALTERNATE EROSION PREVENTION AND CONTROL DEVICES MUST BE REVIEWED AND APPROVED BY LOCAL AND STATE COMPLIANCE PERSONNEL PRIOR TO PLACEMENT.
4. THE CONTRACTOR SHALL INSPECT INSTALLED BMPS AT LEAST ONCE EVERY SEVEN (7) DAYS AND REPAIR OR REPLACE MY DAMAGED OR INEFFECTIVE DEVICES.
5. THE CONTRACTOR SHALL INSPECT INSTALLED BMPS WITHIN 24 HOURS AFTER PRECIPITATION EVENTS OF 0.50 INCHES OR GREATER AND REPAIR OR REPLACE ANY DAMAGED OR INEFFECTIVE DEVICES.
6. DISTURBED AREAS SHALL BE GRADED, SODDED, OR VEGETATED (SEEDED AND MULCHED)WITHIN 13 DAYS OF ANY CONSTRUCTION ACTIVITY FOR AN EFFECTIVE BMP.
7. ALL AREAS IDENTIFIED TO HAVE SOLID SODDING, SHALL BE VEGETATED WITH PERMANENT SEEDING (SEASONAL MIX) IN ACCORDANCE WITH SECTION 860, TABLE FOR ZONE 3 IN THE ALABAMA DEPARTMENT OF TRANSPORTATION STANDARD SPECIFICATIONS HIGHWAY CONSTRUCTION (CURRENT EDITION).
8. SILT FENCE MUST MEET THE REQUIREMENTS OF LOCAL JURISDICTIONAL AGENCY, SAID REQUIREMENTS AS SHOWN BY THESE PLANS.
9. WHEN ANY CONSTRUCTION BORDERS A DRAINAGE COURSE:

A. THE CONTRACTOR IS RESPONSIBLE FOR REMOVING ANY BUILDING OR OTHER EXCAVATION SPOIL DIRT, CONSTRUCTION TRASH OR DEBRIS, ETC., FROM THE DRAINAGE AREA SHOWN HEREON IN AN EXPEDITIOUS MANNER AS CONSTRUCTION PROGRESSES.

B. THE CONTRACTOR HEREBY AGREES TO STOP ALL WORK AND RESTORE THESE AREAS IMMEDIATELY UPON NOTIFICATION BY THE LOCAL JURISDICTIONAL INSPECTOR AND/OR PROFESSIONAL ENGINEER.

10. A COPY OF THE APPROVED LAND DISTURBANCE PLAN SHALL BE PRESENT ON THE SITE WHENEVER LAND DISTURBING ACTIVITY IS IN PROGRESS.
11. CONTRACTOR SHALL MAINTAIN ALL EROSION CONTROL MEASURES UNTIL PERMANENT VEGETATION HAS BEEN ESTABLISHED. CONTRACTOR SHALL CLEAN OUT ALL SEDIMENT PONDS WHEN REQUIRED BY THE ENGINEER OR LOCAL JURISDICTIONAL INSPECTOR. CONTRACTOR SHALL INSPECT EROSION CONTROL MEASURES AT THE END OF EACH WORKING DAY TO ENSURE MEASURES ARE FUNCTIONING PROPERLY.
12. ALL SLOPES SHALL BE STABILIZED AND VEGETATED AS SOON AS POSSIBLE. USE EROSION CONTROL BLANKET (ECB) WHERE GRASSING SLOPES ARE INTERMITTENT.
13. ALL CONSTRUCTION WASTE AND DEBRIS, SILT FENCES, HAY BALES, AND INLET PROTECTION AND OTHER TEMPORARY BMP'S HALL BE REMOVED FROM THE SITE UPON CONSTRUCTION COMPLETION.
14. INACTIVE PROJECTS (MORE THAN 7 DAYS) SHALL BE MULCHED IF INACTIVE FOR LESS THAN 60 DAYS. IF INACTIVE FOR MORE THAN 60 DAYS, DISTURBED AREAS SHALL BE SEEDED & MULCHED

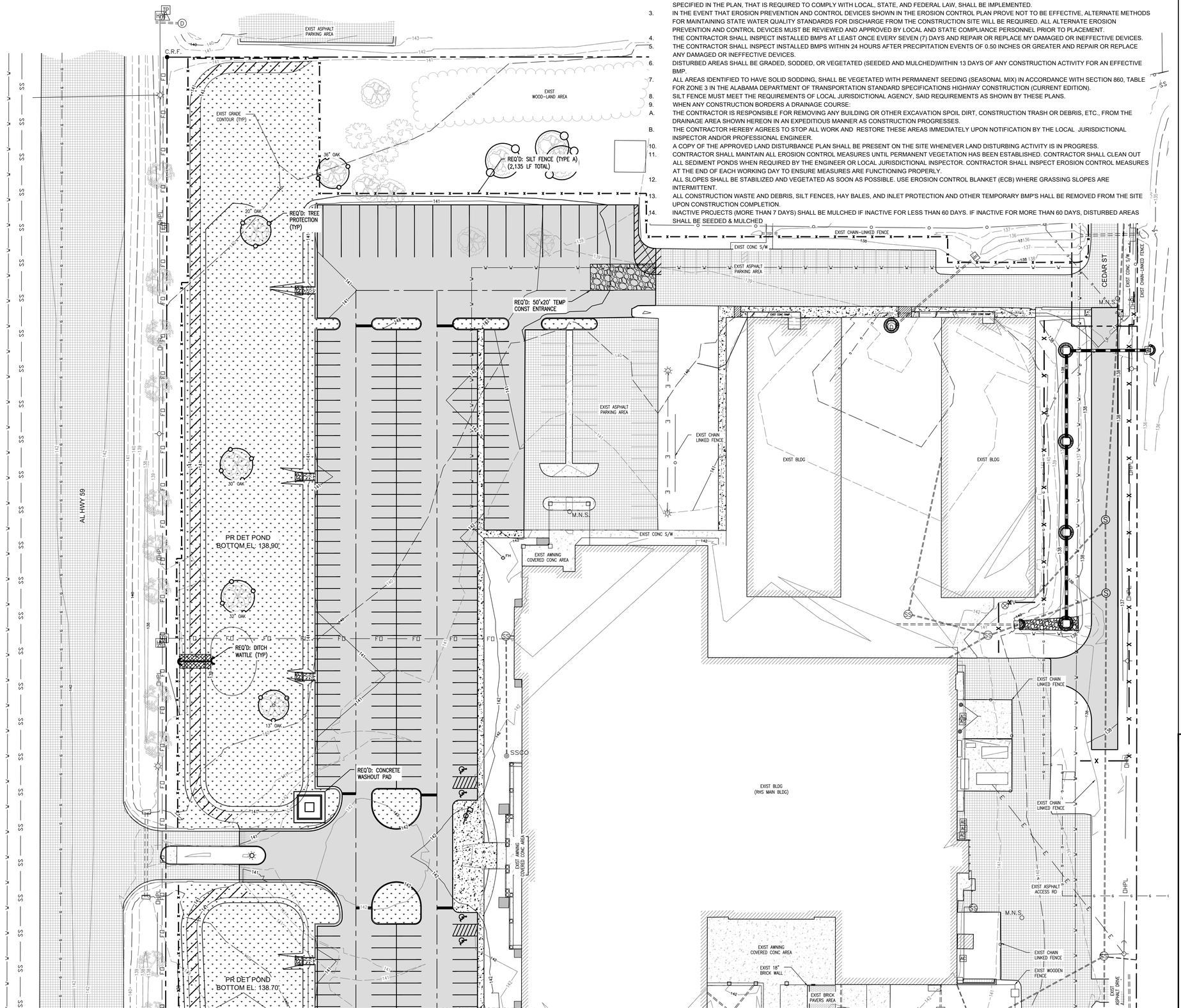

GRAPHIC SCALE

0 15 30 60

1 inch = 30 feet

ADDITIONS TO ROBERTSDALE HIGH SCHOOL

ROBERTSDALE, ALABAMA

FOR THE

BALDWIN COUNTY BOARD OF EDUCATION

McKEE & ASSOCIATES, INC.
ARCHITECTS
631 SOUTH HULL STREET, MONTGOMERY, ALABAMA 36104 (334) 834-9933

Sawgrass
ENGINEERING - SURVEYING - CONSTRUCTION MANAGEMENT
Phone: (251) 544-7600
30813 Sgt. E. L. "Ebone" Thomas Drive, Spanish Fort, AL 36527

ALABAMA LICENSED PROFESSIONAL ENGINEER No. 31201 Joshua H. Robertson

SHEET TITLE : EROSION CONTROL PLAN 1

MCKEE JOB # : 23-195

DRAWN BY : BAT

DATE: 10-11-23

REVISED DATE:

REVISED DATE:

REVISED DATE:

SHEET NO. : C-7.0

- S:\1-Clients\23-117 '23 Additions to Robertsdale HS McKee\CIVIL ENGINEERING\PRODUCTION DWGS\GRADING-DRAINAGE-EC PLAN.dwg
- Friday, October 13, 2023 11:54:57 AM

LEGEND

- PR INLET PROTECTION
- PR DITCH CHECK WATTLE
- PR CONC WASHOUT
- PR SLIT FENCE
- PR CONSTRUCTION ENTRANCE
- PR SOD & TOPSOIL AREA

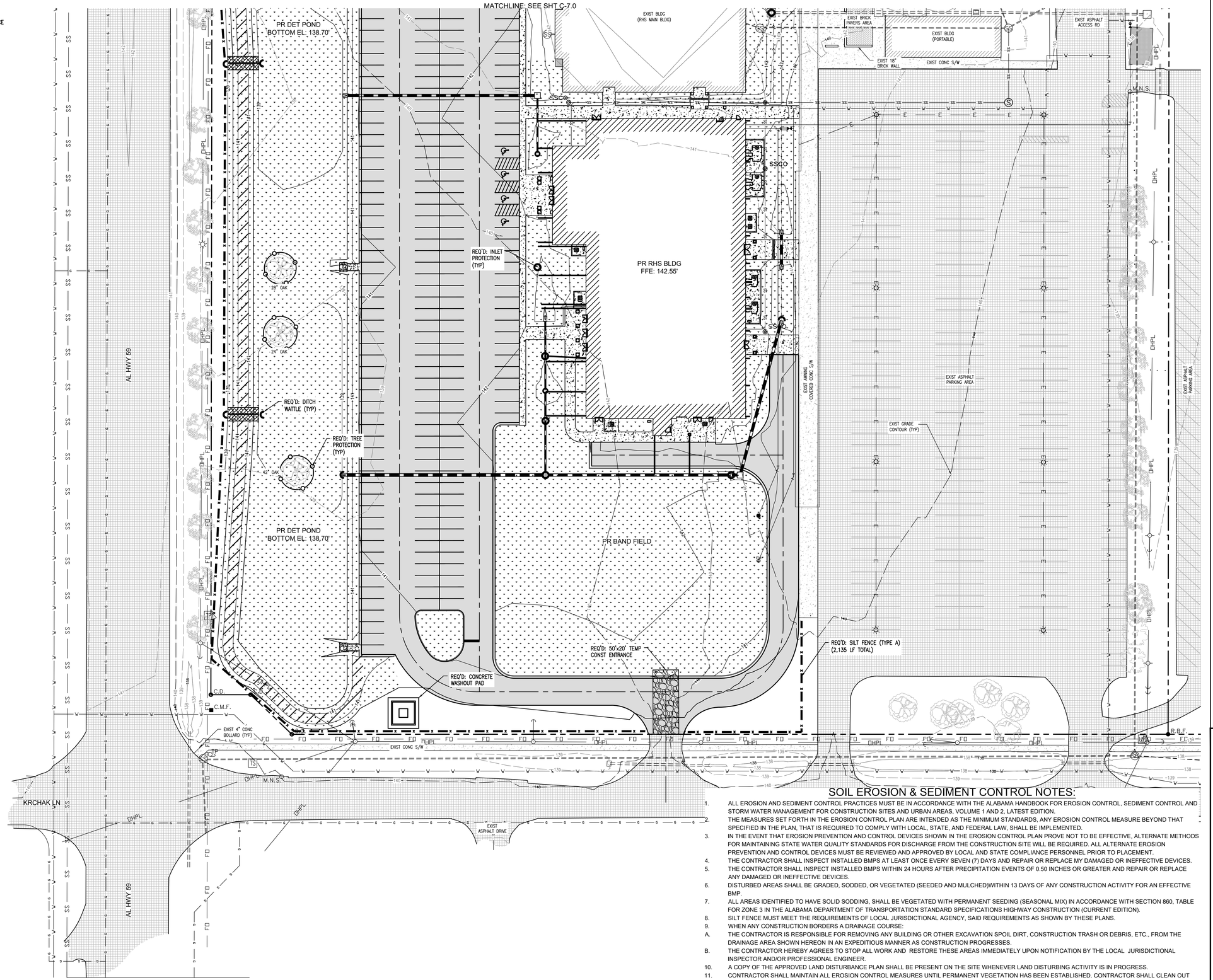

N

GRAPHIC SCALE

0 15 30 60

1 inch = 30 feet

SOIL EROSION & SEDIMENT CONTROL NOTES:

1. ALL EROSION AND SEDIMENT CONTROL PRACTICES MUST BE IN ACCORDANCE WITH THE ALABAMA HANDBOOK FOR EROSION CONTROL, SEDIMENT CONTROL AND STORM WATER MANAGEMENT FOR CONSTRUCTION SITES AND URBAN AREAS, VOLUME 1 AND 2, LATEST EDITION.
2. THE MEASURES SET FORTH IN THE EROSION CONTROL PLAN ARE INTENDED AS THE MINIMUM STANDARDS, ANY EROSION CONTROL MEASURE BEYOND THAT SPECIFIED IN THE PLAN, THAT IS REQUIRED TO COMPLY WITH LOCAL, STATE, AND FEDERAL LAW, SHALL BE IMPLEMENTED.
3. IN THE EVENT THAT EROSION PREVENTION AND CONTROL DEVICES SHOWN IN THE EROSION CONTROL PLAN PROVE NOT TO BE EFFECTIVE, ALTERNATE METHODS FOR MAINTAINING STATE WATER QUALITY STANDARDS FOR DISCHARGE FROM THE CONSTRUCTION SITE WILL BE REQUIRED. ALL ALTERNATE EROSION PREVENTION AND CONTROL DEVICES MUST BE REVIEWED AND APPROVED BY LOCAL AND STATE COMPLIANCE PERSONNEL PRIOR TO PLACEMENT.
4. THE CONTRACTOR SHALL INSPECT INSTALLED BMPS AT LEAST ONCE EVERY SEVEN (7) DAYS AND REPAIR OR REPLACE MY DAMAGED OR INEFFECTIVE DEVICES.
5. THE CONTRACTOR SHALL INSPECT INSTALLED BMPS WITHIN 24 HOURS AFTER PRECIPITATION EVENTS OF 0.50 INCHES OR GREATER AND REPAIR OR REPLACE ANY DAMAGED OR INEFFECTIVE DEVICES.
6. DISTURBED AREAS SHALL BE GRADED, SODDED, OR VEGETATED (SEEDED AND MULCHED)WITHIN 13 DAYS OF ANY CONSTRUCTION ACTIVITY FOR AN EFFECTIVE BMP.
7. ALL AREAS IDENTIFIED TO HAVE SOLID SODDING, SHALL BE VEGETATED WITH PERMANENT SEEDING (SEASONAL MIX) IN ACCORDANCE WITH SECTION 860, TABLE FOR ZONE 3 IN THE ALABAMA DEPARTMENT OF TRANSPORTATION STANDARD SPECIFICATIONS HIGHWAY CONSTRUCTION (CURRENT EDITION).
8. SILT FENCE MUST MEET THE REQUIREMENTS OF LOCAL JURISDICTIONAL AGENCY, SAID REQUIREMENTS AS SHOWN BY THESE PLANS.
9. WHEN ANY CONSTRUCTION BORDERS A DRAINAGE COURSE:

A. THE CONTRACTOR IS RESPONSIBLE FOR REMOVING ANY BUILDING OR OTHER EXCAVATION SPOIL DIRT, CONSTRUCTION TRASH OR DEBRIS, ETC., FROM THE DRAINAGE AREA SHOWN HEREON IN AN EXPEDITIOUS MANNER AS CONSTRUCTION PROGRESSES.

B. THE CONTRACTOR HEREBY AGREES TO STOP ALL WORK AND RESTORE THESE AREAS IMMEDIATELY UPON NOTIFICATION BY THE LOCAL JURISDICTIONAL INSPECTOR AND/OR PROFESSIONAL ENGINEER.

10. A COPY OF THE APPROVED LAND DISTURBANCE PLAN SHALL BE PRESENT ON THE SITE WHENEVER LAND DISTURBING ACTIVITY IS IN PROGRESS.
11. CONTRACTOR SHALL MAINTAIN ALL EROSION CONTROL MEASURES UNTIL PERMANENT VEGETATION HAS BEEN ESTABLISHED. CONTRACTOR SHALL CLEAN OUT ALL SEDIMENT PONDS WHEN REQUIRED BY THE ENGINEER OR LOCAL JURISDICTIONAL INSPECTOR. CONTRACTOR SHALL INSPECT EROSION CONTROL MEASURES AT THE END OF EACH WORKING DAY TO ENSURE MEASURES ARE FUNCTIONING PROPERLY.
12. ALL SLOPES SHALL BE STABILIZED AND VEGETATED AS SOON AS POSSIBLE. USE EROSION CONTROL BLANKET (ECB) WHERE GRASSING SLOPES ARE INTERMITTENT.
13. ALL CONSTRUCTION WASTE AND DEBRIS, SILT FENCES, HAY BALES, AND INLET PROTECTION AND OTHER TEMPORARY BMP'S HALL BE REMOVED FROM THE SITE UPON CONSTRUCTION COMPLETION.
14. INACTIVE PROJECTS (MORE THAN 7 DAYS) SHALL BE MULCHED IF INACTIVE FOR LESS THAN 60 DAYS. IF INACTIVE FOR MORE THAN 60 DAYS, DISTURBED AREAS SHALL BE SEEDED & MULCHED

ADDITIONS
TO
ROBERTSDALE HIGH SCHOOL
ROBERTSDALE, ALABAMA
FOR THE
BALDWIN COUNTY BOARD OF EDUCATION

Sawgrass
ENGINEERING - SURVEYING - CONSTRUCTION MANAGEMENT
3683 Hgt Ft. 1 "Stone" Thomas Drive, Spanish Fort, AL 36527
Phone: (251) 544-7600

McKEE & ASSOCIATES
ARCHITECTS, INC.
631 SOUTH HULL STREET, MONTGOMERY, ALABAMA 36104 (334) 834-9933

ALABAMA LICENSED PROFESSIONAL ENGINEER
William H. Robertson

SHEET TITLE : EROSION CONTROL PLAN 2

MCKEE JOB # : 23-195

DRAWN BY : BAT

DATE: 10-11-23

REVISED DATE:

REVISED DATE:

REVISED DATE:

SHEET NO. : C-7.1

- S:\1-Clients\23-117 '23 Additions to Robertsdale HS McKee\CIVIL ENGINEERING\PRODUCTION DWGS\GRADING-DRAINAGE-EC PLAN.dwg
- Friday, October 13, 2023 11:55:08 AM

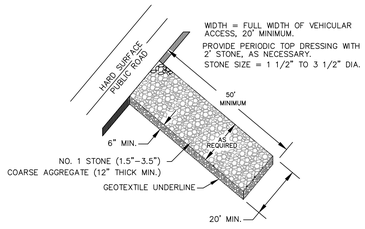

STONE PAD CONSTRUCTION EXIT

NTS

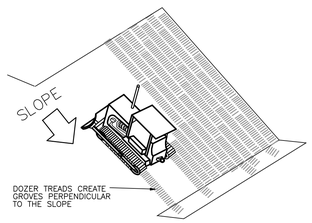

SURFACE ROUGHENING

NTS

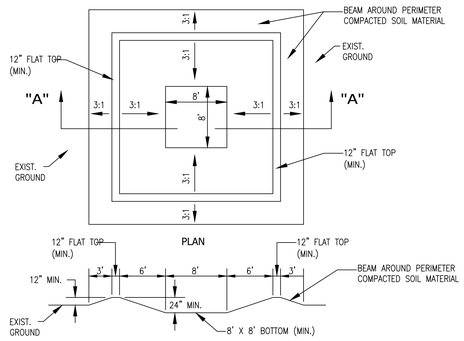

SECTION "A-A"

CONCRETE WASHOUT AREA DETAILS

NTS

GENERAL NOTES

1. TYPE "A" SILT FENCE SHALL BE USED IN AREAS OF CONCENTRATED FLOW.
2. SILT FENCES ARE TEMPORARY EROSION CONTROL ITEMS THAT SHALL BE ERECTED OPPOSITE ERODIBLE AREAS SUCH AS NEWLY GRADED FILL SLOPES AND ADJACENT TO STREAMS AND CHANNELS.
3. SILT FENCE SHOULD BE PLACED WELL INSIDE PROPERTY BOUNDARY AND ALONG EDGE OF CLEARING LIMITS. THIS WILL ALLOW ROOM FOR A BACK–UP FENCE IF FIRST BECOMES FULL. SILT FENCES SHALL BE IN PLACE PRIOR TO ANY CONSTRUCTION OPERATION.
4. WHEREVER POSSIBLE, SILT FENCES SHALL BE CONSTRUCTED ACROSS A FLAT AREA IN THE SHAPE OF A HORSESHOE. THIS AIDS IN POND–ING OF RUNOFF AND FACILITATES SEDIMENTATION.
5. AFTER THE CONSTRUCTION AREA IS STABILIZED AND EROSION ACTIVITY CURTAILED, SILT FENCES SHALL BE REMOVED.
6. RING FASTENERS USED TO SECURE GEOTEXTILES TO WOVEN WIRE SHALL BE 13 GA. (AMERICAN).
7. IF WOOD POSTS ARE USED, STAPLES FOR SECURING WOVEN WIRE TO POSTS SHALL BE NINE (9) GAUGE, GALVANIZED, 1 1/2" LONG, FIVE (5) PER POST Ø APPROXIMATELY 1'–0" ON CENTER.
8. WOVEN WIRE TO BE 12 1/2 GAUGE (MINIMUM).

SPECIFICATIONS

CURRENT ALABAMA DEPARTMENT OF TRANSPORTATION

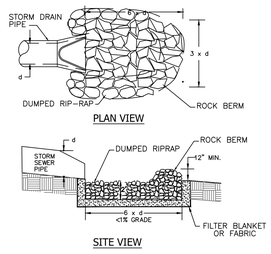

RIPRAP OUTLET PROTECTION

NTS

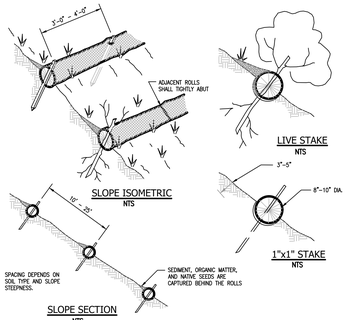

NOTES:
1. INSTALLATION TO BE COMPLETED IN ACCORDANCE WITH MANUFACTURER'S SPECIFICATIONS.
2. DO NOT SCALE DRAWINGS.
3. STRAW ROLL INSTALLATION REQUIRES THE PLACEMENT AND SECURE STAKING OF THE ROLL IN A TRENCH, 3" – 5" DEEP, DUG ON CONTOUR. RUNOFF MUST NOT BE ALLOWED TO RUN UNDER OR AROUND ROLL.

STRAW WATTLES

SLOPE STABILIZATION INSTALLATION DETAIL

NTS

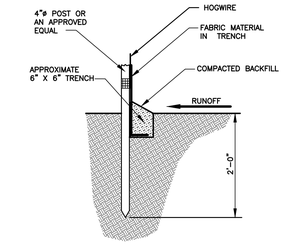

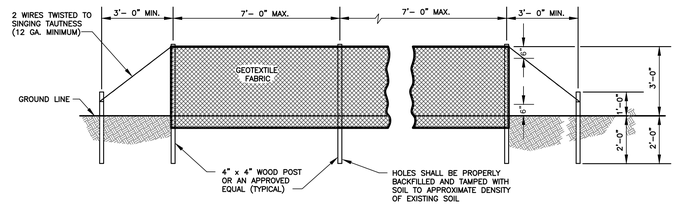

TYPE "A" TYPICAL SILT FENCE INSTALLATION

NTS

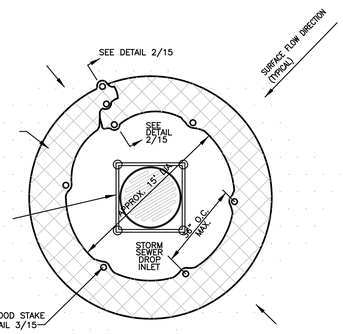

PLAN VIEW

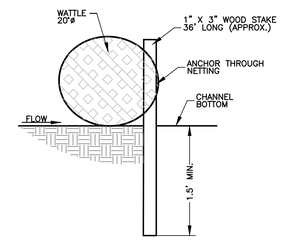

STAKE DETAILS

N.T.S.

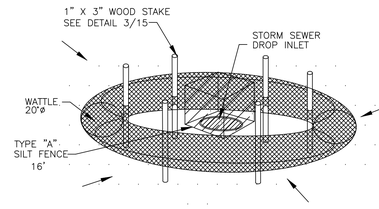

NOTE:
COST OF WOOD STAKES OR EQUAL SHALL BE INCLUDED IN COST OF WATTLES

DROP INLET PROTECTION

NTS

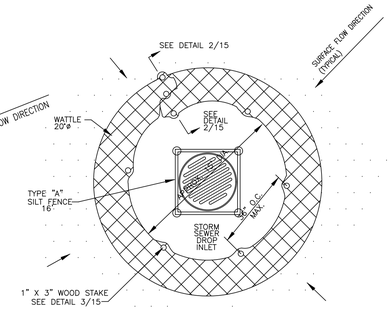

PLAN VIEW

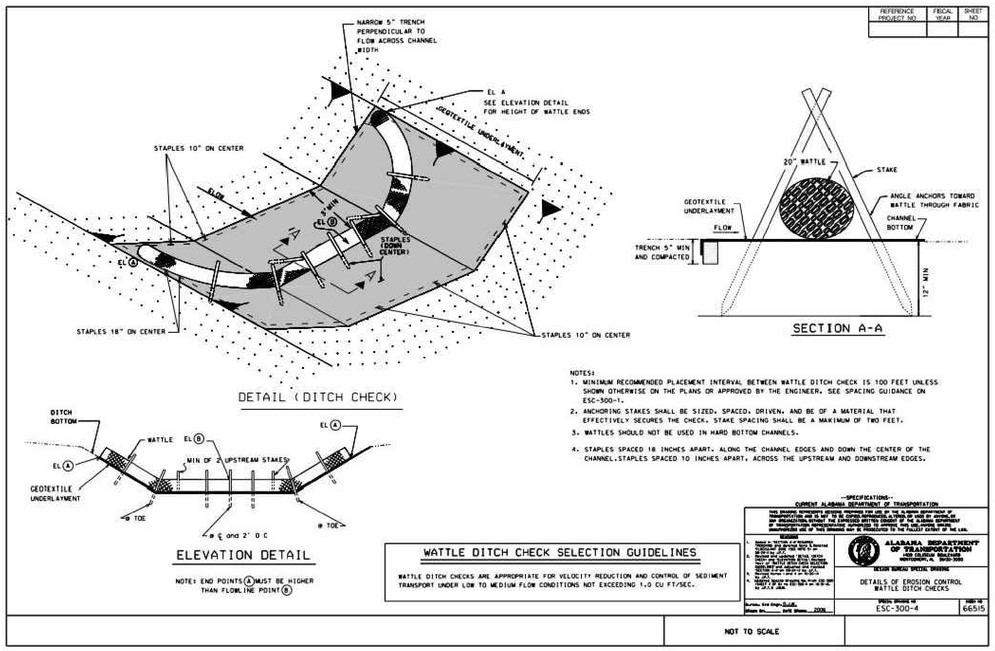

NOTES:
1. MINIMUM RECOMMENDED PLACEMENT INTERVAL BETWEEN WATTLE DITCH CHECK IS 100 FEET UNLESS SHOWN OTHERWISE ON THE PLANS OR APPROVED BY THE ENGINEER. SEE SPACING GUIDANCE ON ESC-300-1.
2. ANCHORING STAKES SHALL BE SIZED, SPACED, DRIVEN, AND BE OF A MATERIAL THAT EFFECTIVELY SECURES THE CHECK. STAKE SPACING SHALL BE A MAXIMUM OF TWO FEET.
3. WATTLES SHOULD NOT BE USED IN HARD BOTTOM CHANNELS.
4. STAPLES SPACED 18 INCHES APART, ALONG THE CHANNEL EDGES AND DOWN THE CENTER OF THE CHANNEL. STAPLES SPACED 10 INCHES APART, ACROSS THE UPSTREAM AND DOWNSTREAM EDGES.

WATTLE DITCH CHECK SELECTION GUIDELINES

WATTLE DITCH CHECKS ARE APPROPRIATE FOR VELOCITY REDUCTION AND CONTROL OF SEDIMENT TRANSPORT UNDER LOW TO MEDIUM FLOW CONDITIONS NOT EXCEEDING 1.0 CU FT/SEC.

-SPECIFICATIONS-
CURRENT ALABAMA DEPARTMENT OF TRANSPORTATION

ALABAMA DEPARTMENT OF TRANSPORTATION
1409 COLEMAN ROAD
MONTGOMERY, AL 36130-3050
DESIGN BUREAU SPECIAL DRAWING

DETAILS OF EROSION CONTROL WATTLE DITCH CHECKS

ESC-300-4 | 66515

NOT TO SCALE

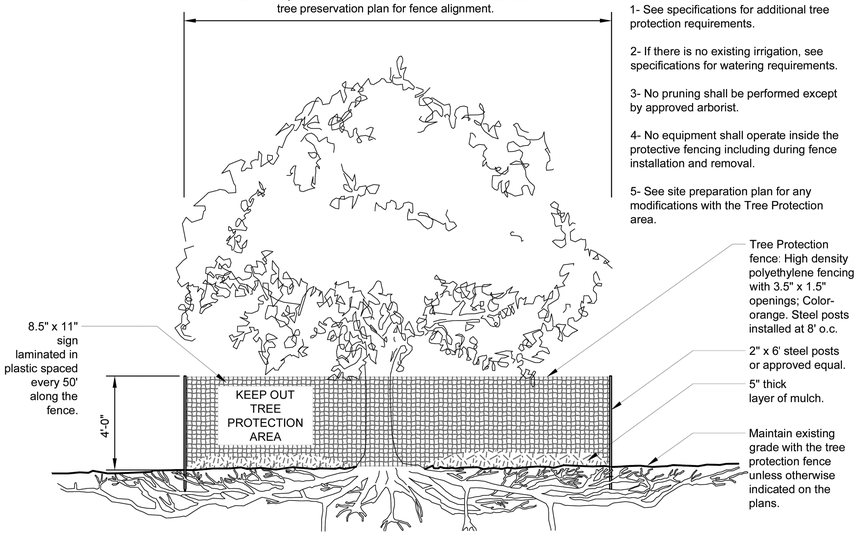

Notes:
1- See specifications for additional tree protection requirements.

2- If there is no existing irrigation, see specifications for watering requirements.

3- No pruning shall be performed except by approved arborist.

4- No equipment shall operate inside the protective fencing including during fence installation and removal.

5- See site preparation plan for any modifications with the Tree Protection area.

TREE PROTECTION DETAIL

NTS

ADDITIONS
TO
ROBERTSDALE HIGH SCHOOL
ROBERTSDALE, ALABAMA
FOR THE
BALDWIN COUNTY BOARD OF EDUCATION

McKEE & ASSOCIATES
ARCHITECTS, INC.
631 SOUTH HULL STREET, MONTGOMERY, ALABAMA 36104 (334) 834-9933

Sawgrass
ENGINEERING - SURVEYING - CONSTRUCTION MANAGEMENT
3663 Fall Ft. 1 Boone Thomas Drive, Spanish Fort, AL 36527 Phone: (251) 544-7600

ALABAMA EXPIRES 12/31/2024 PROFESSIONAL ENGINEER James H. Robertson

SHEET TITLE : EROSION CONTROL DETAILS

MCKEE JOB # : 23-195

DRAWN BY : BAT

DATE: 10-11-23

REVISED DATE:

REVISED DATE:

REVISED DATE:

SHEET NO. : C-7.2

- S:\1-Clients\23-117 '23 Additions to Robertsdale HS McKee\CIVIL ENGINEERING\PRODUCTION DWGS\NOTES-DETAILS.dwg
- Friday, October 13, 2023 11:55:13 AM

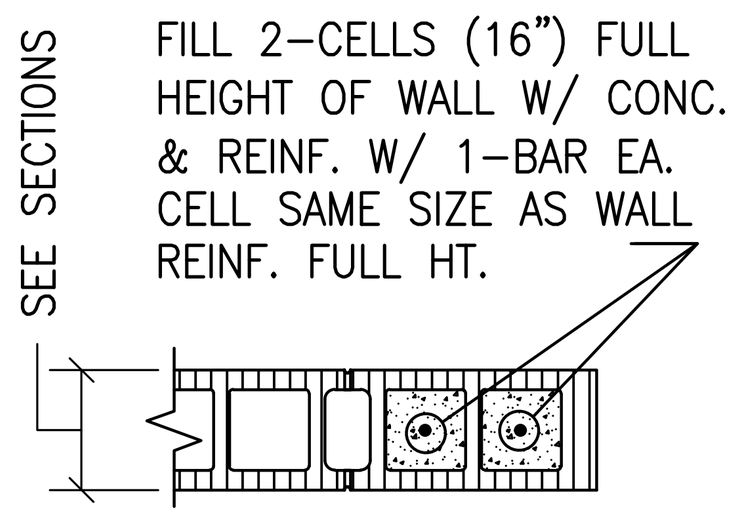

JAMB AT 16" HIGH CMU LINTELS BEARING 16"

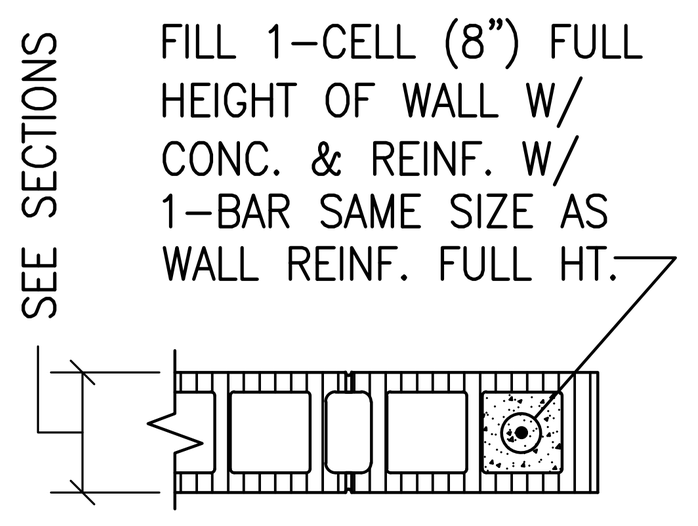

JAMB AT 8" HIGH CMU LINTELS BEARING 8"

NOTE:
ALL JAMB REINF. SHALL BE CONT. THRU LINTEL. MAINTAIN 3" VERT. BAR SPACING WHERE BEAM HORIZ. REINF. PASSES BETWEEN VERT. BARS. MAINTAIN 1" CLEARANCE BETWEEN BEAM HORIZ. BARS.

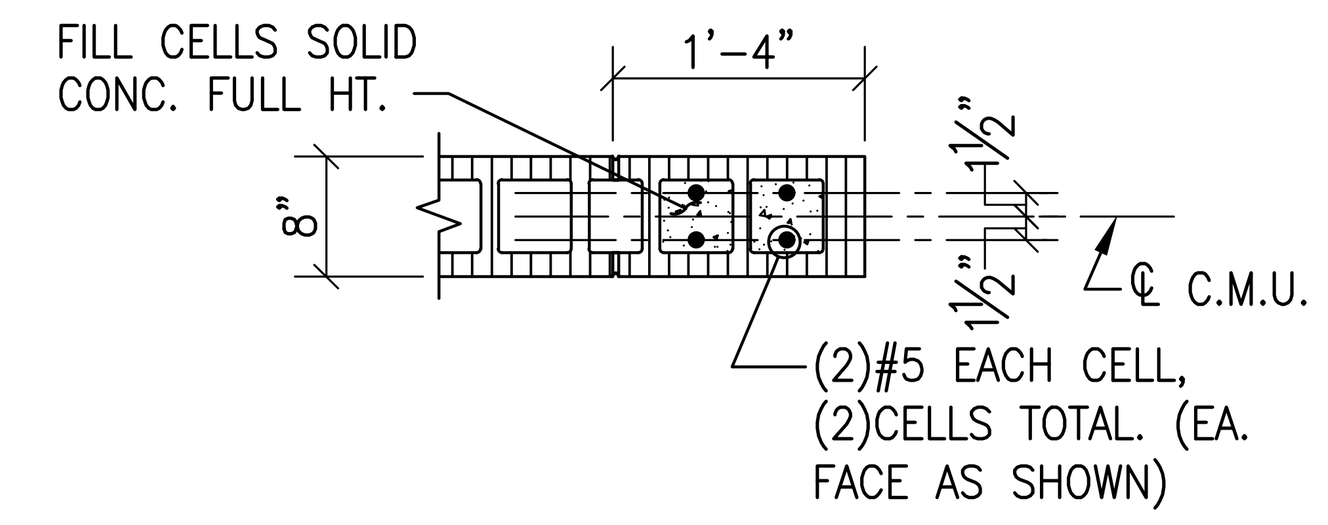

JAMB AT CONCRETE LINTELS & 24" HIGH CMU U-BLOCK LINTELS

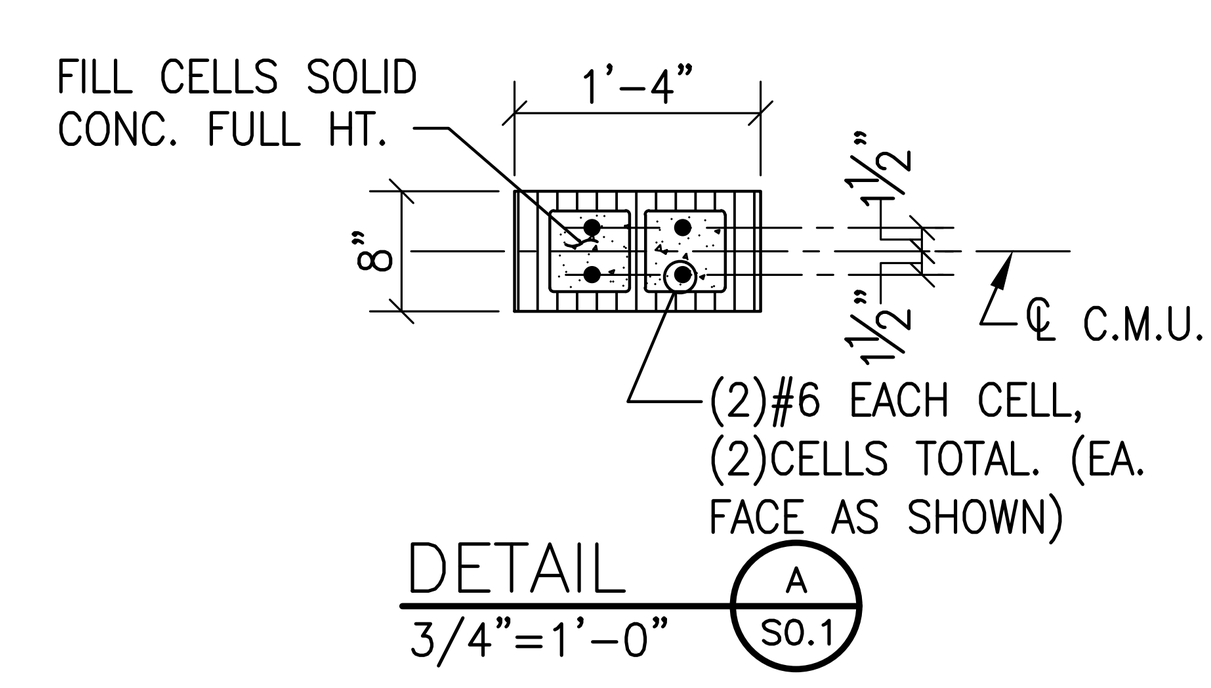

INTERMEDIATE MULLION AT 'DBL' 6'-8" ENTRY DOORS (SHARED MULLION)

TYPICAL JAMB REINFORCING DETAILS

(UNLESS NOTED OTHERWISE ON DRAWINGS)

LINTEL SCHEDULE					
MARK OR LOCATION	MAX. SPAN	TYPE	SIZE	REINFORCEMENT	REMARKS
BRICK	4'-0"	STEEL ANGLE	∠4x4x1/4	-----	BEAR 8" EACH END
BRICK	6'-8"	STEEL ANGLE	∠6x4x3/8	-----	LONG LEG VERTICAL BEAR 8" EACH END
BRICK	8'-4"	STEEL ANGLE	∠7x4x3/8	-----	LONG LEG VERTICAL BEAR 8" EACH END
8"CMU	3'-4"	U-BLOCK	8"x8"	#5 TOP & BOTTOM	8" HIGH U-BLOCK
8"CMU	6'-8"	U-BLOCK	8"x16"	(2)#5 TOP & BOTTOM	16" HIGH U-BLOCK
8"CMU	8'-4"	U-BLOCK	8"x24"	(2)#5 TOP & BOTTOM	24" HIGH U-BLOCK
8"CMU	10'-0"	CONC. BEAM	7 5/8"x16"	(2)#5 TOP & BOTTOM #3 @ 6"O.C.	SEE NOTE 3
L-1	8'-4"	CONC. BEAM	7 5/8"x20"		SEE NOTE 3 HEAD OF OPNG. AT +8'-4" A.F.F.

NOTES:

1 - UNLESS NOTED OTHERWISE, BEAR 8" HIGH U-BLOCKS 8" EA. END AND 16" AND 24" HIGH U-BLOCKS 16" EACH END.
2 - FILL CELLS WITH CONCRETE FULL HEIGHT AT U-BLOCK. BEARING FOR ENTIRE LENGTH OF BEARING & REINF. EA. CELL W/ BAR SAME SIZE AS WALL REINFORCING. VERTICAL REINF. SHALL BE CONTINUOUS THRU LINTEL AT BEARING.
3 - BEAR CONC. BEAMS 16" EA. END. USE REINF. BAR EA. FACE (8"O.C.= 4 BARS TOTAL EA. JAMB). SEE TYP. JAMB CONDITION @ CONC. BEAM LINTELS THIS SHEET.

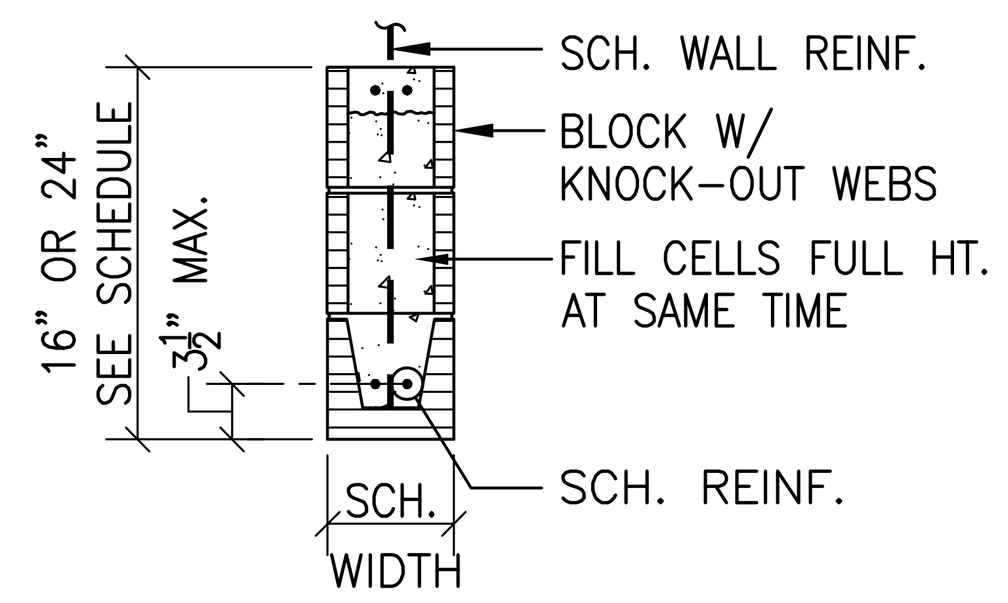

16" & 24" HIGH U-BLOCK

FOOTING SCHEDULE			
MARK	SIZE	DEPTH	REINFORCEMENT
(A)	3'-0" x 3'-0"	12"	3-#4 EA. WAY TOP 4-#4 EA. WAY BOT. ✱
(B)	3'-6" x 3'-6"	12"	3-#4 EA. WAY TOP 5-#4 EA. WAY BOT. ✱
(C)	4'-0" x 4'-0"	12"	4-#4 EA. WAY TOP 6-#4 EA. WAY BOT.
(D)	5'-6" x 5'-6"	12"	5-#4 EA. WAY TOP 9-#4 EA. WAY BOT.
(E)	6'-6" x 6'-6"	14"	6-#4 EA. WAY TOP 8-#5 EA. WAY BOT.
(F)	7'-0" x 7'-0"	16"	7-#4 EA. WAY TOP 9-#5 EA. WAY BOT.
(G)	7'-6" x 7'-6"	16"	7-#4 EA. WAY TOP 10-#5 EA. WAY BOT.

✱- PROVIDE 180° HOOK EACH END OF BARS

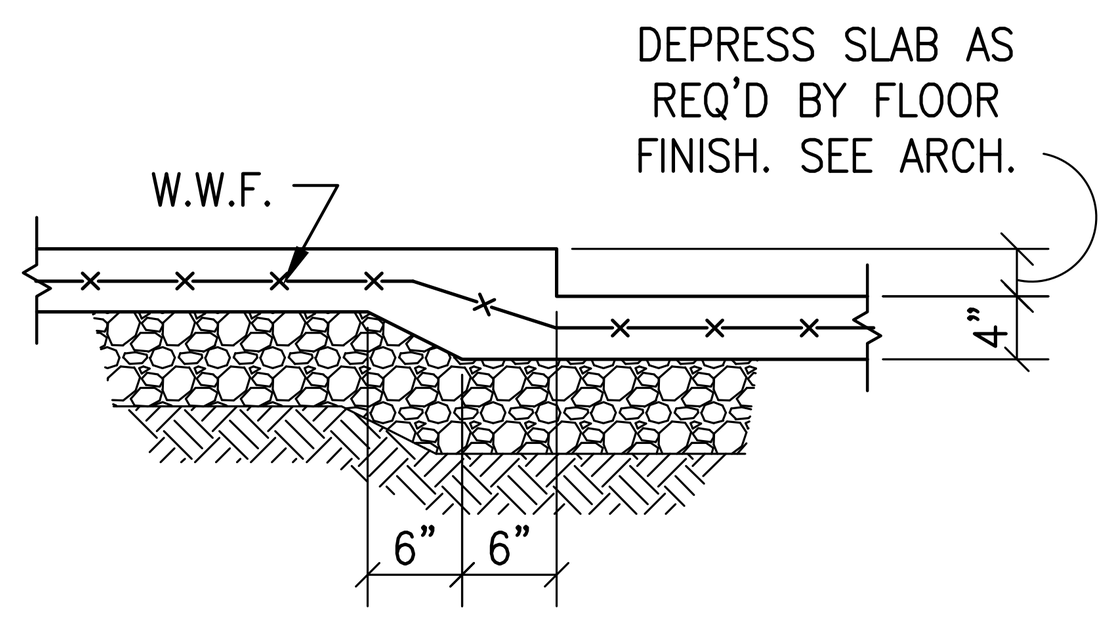

TYPICAL SLAB DEPRESSION DETAIL

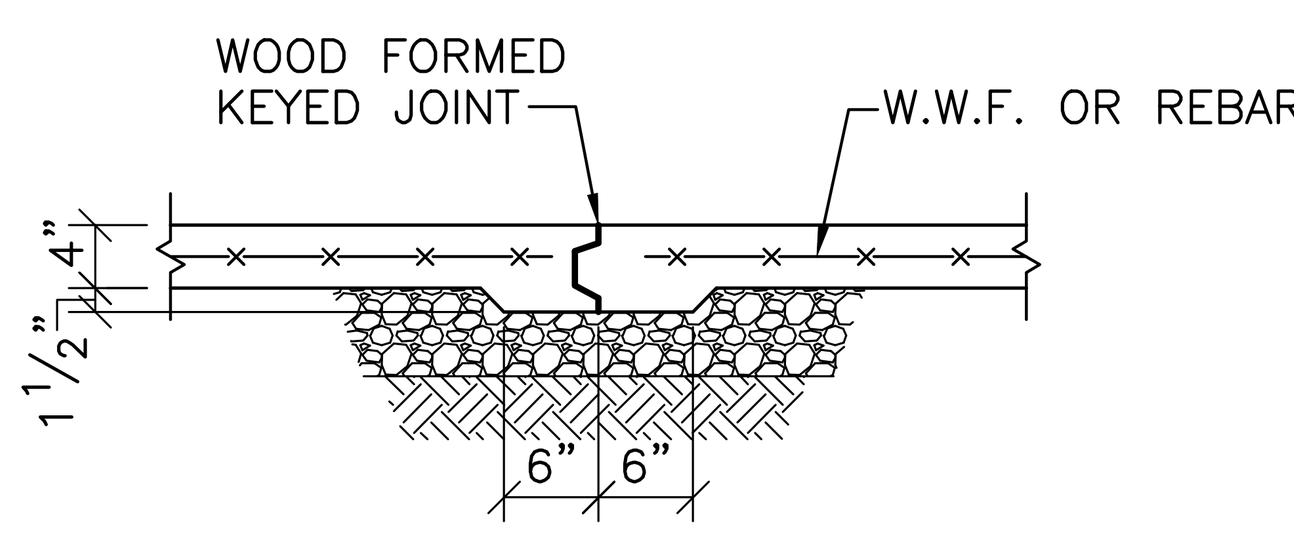

TYPICAL SLAB CONSTRUCTION JOINT DETAIL-(C.J.)

NOTE:
IF SAWED JOINTS ARE USED, JOINTS MUST BE SAWED SAME DAY AS SLAB POUR.

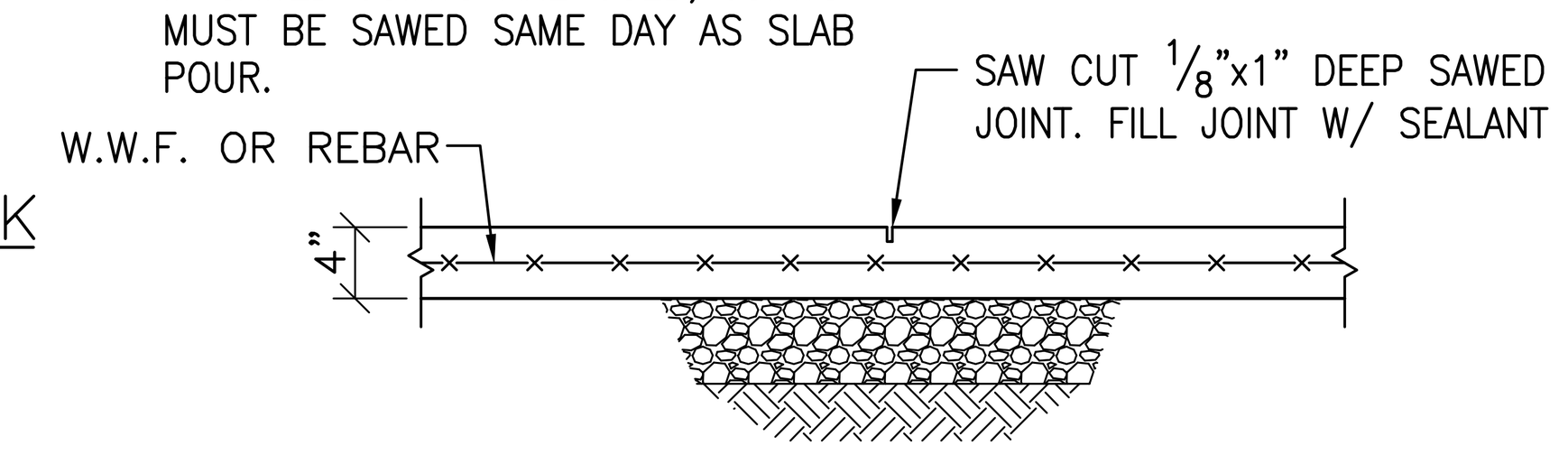

ALTERNATE SLAB CONSTRUCTION JOINT DETAIL (SAWED JOINT)

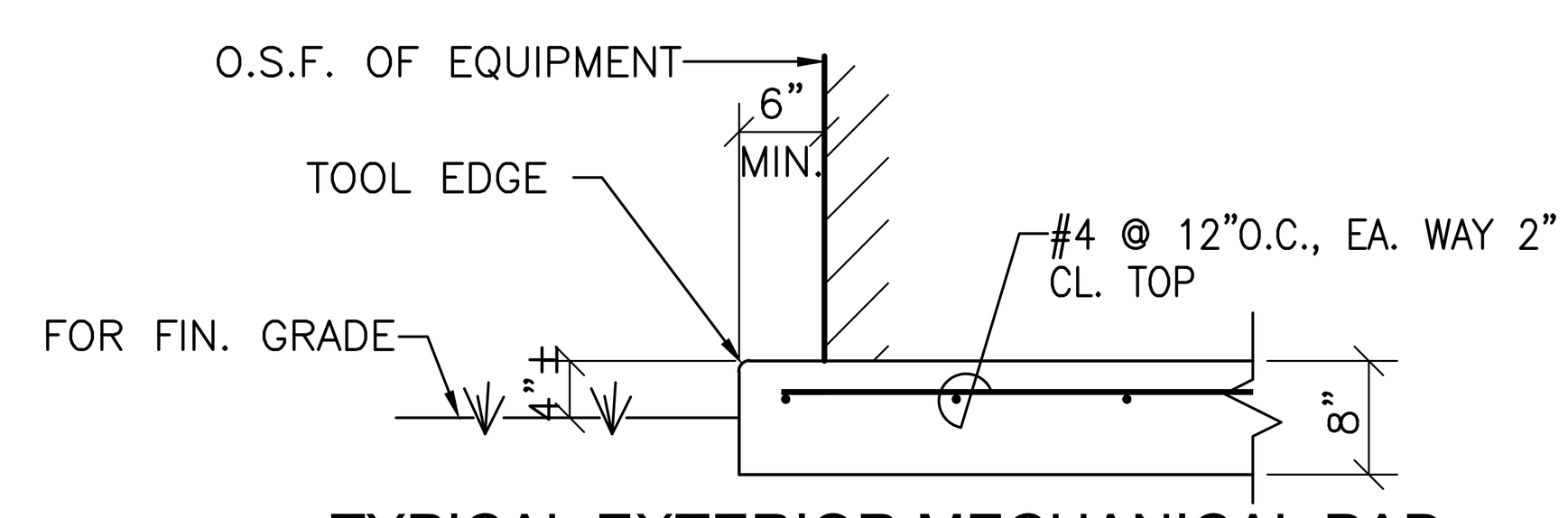

TYPICAL EXTERIOR MECHANICAL PAD

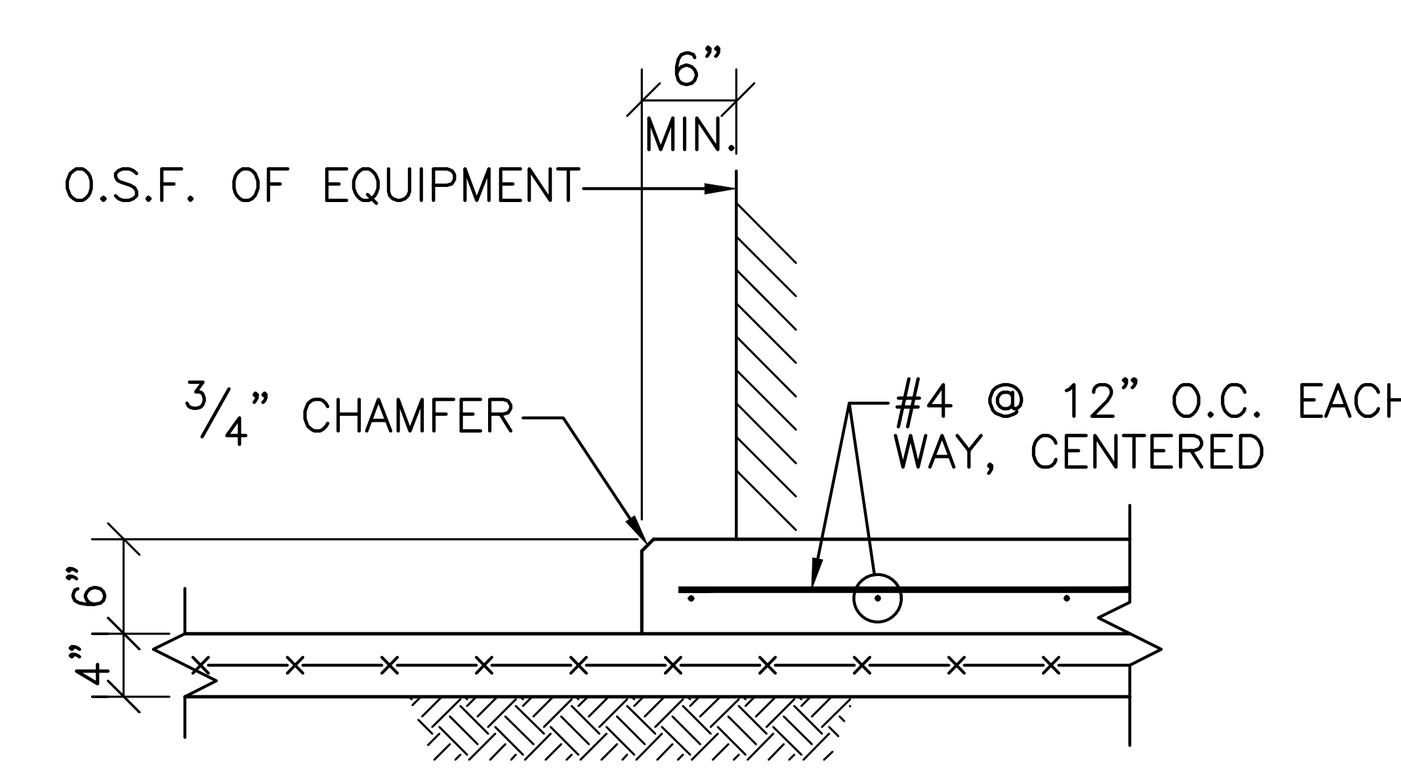

TYPICAL MECHANICAL HOUSEKEEPING PAD

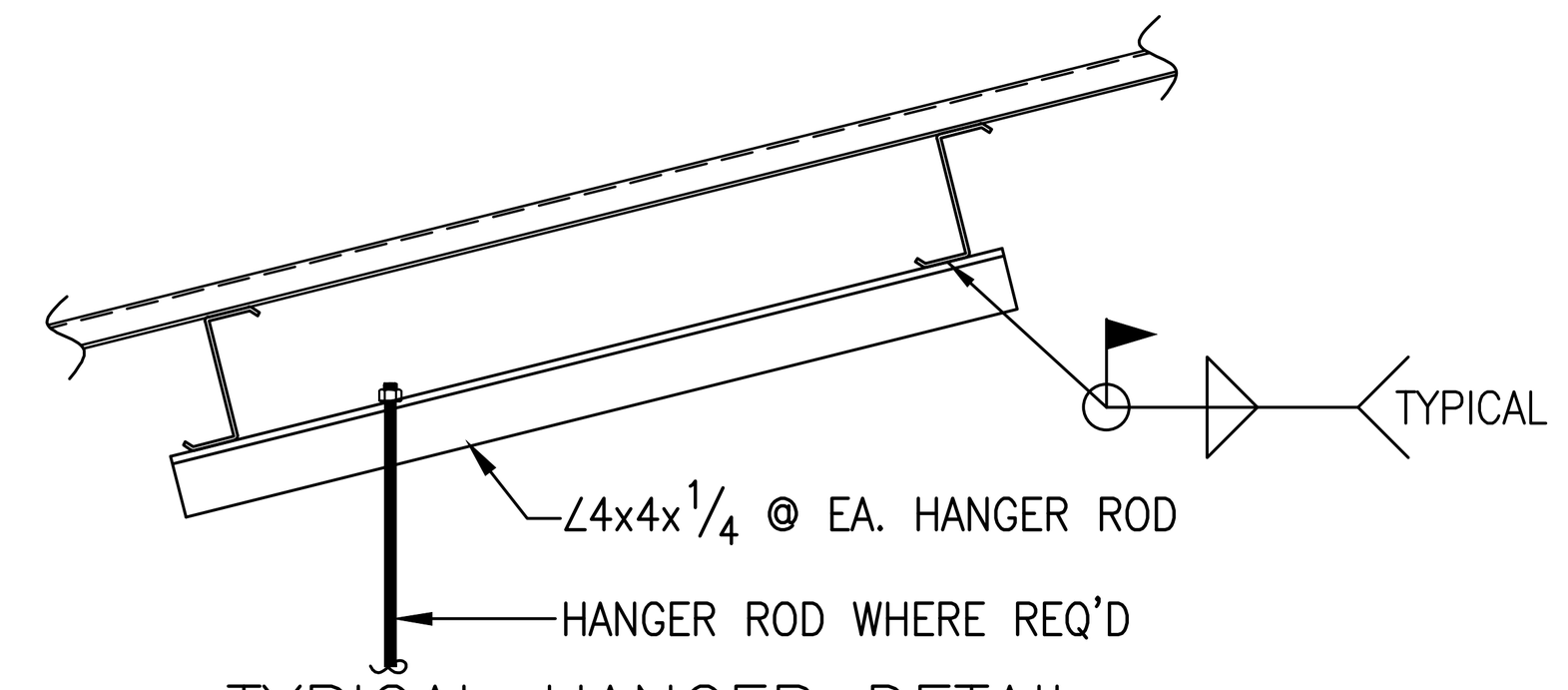

TYPICAL HANGER DETAIL

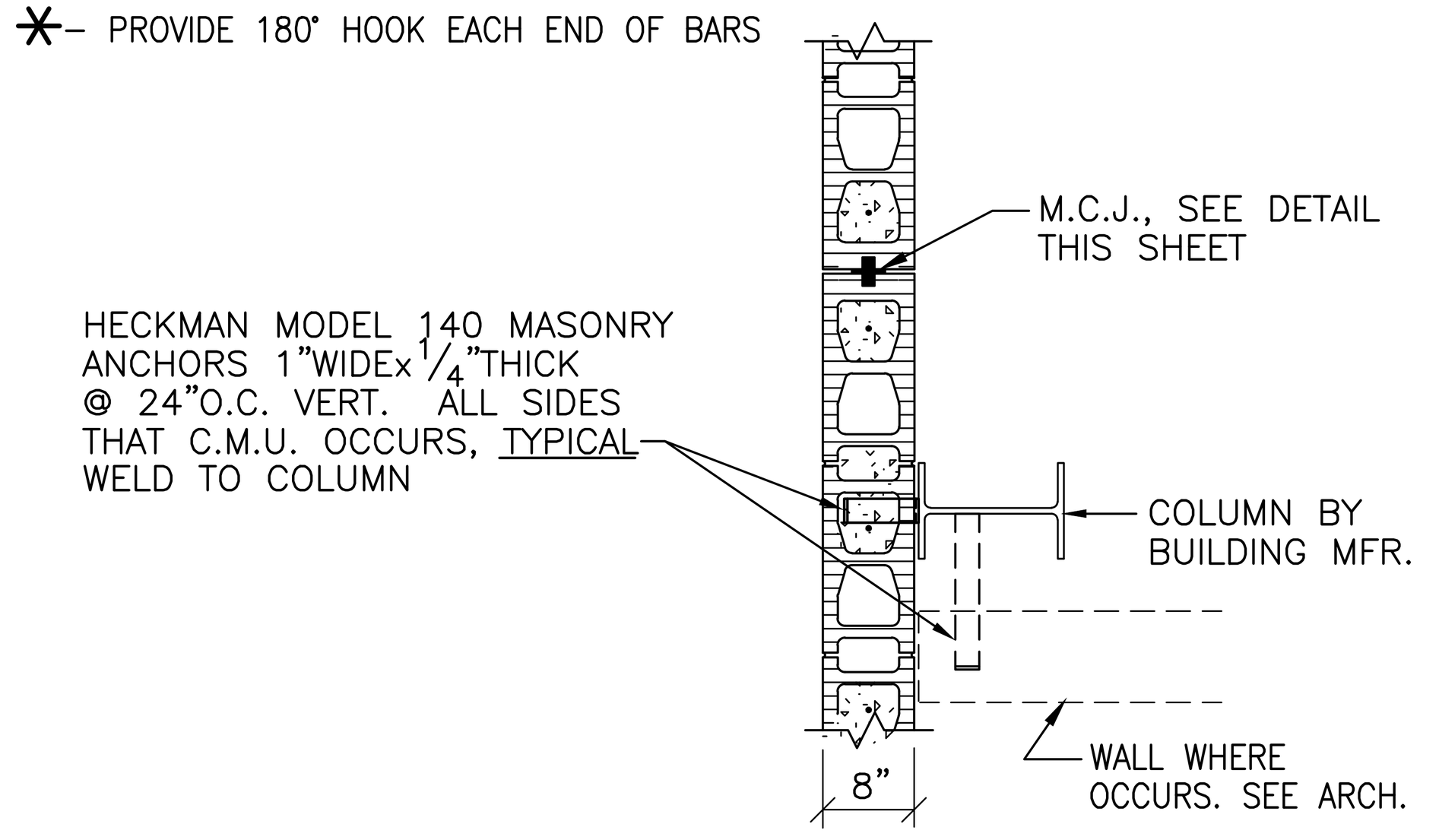

TYPICAL COLUMN-C.M.U. WALL ANCHORAGE DETAIL

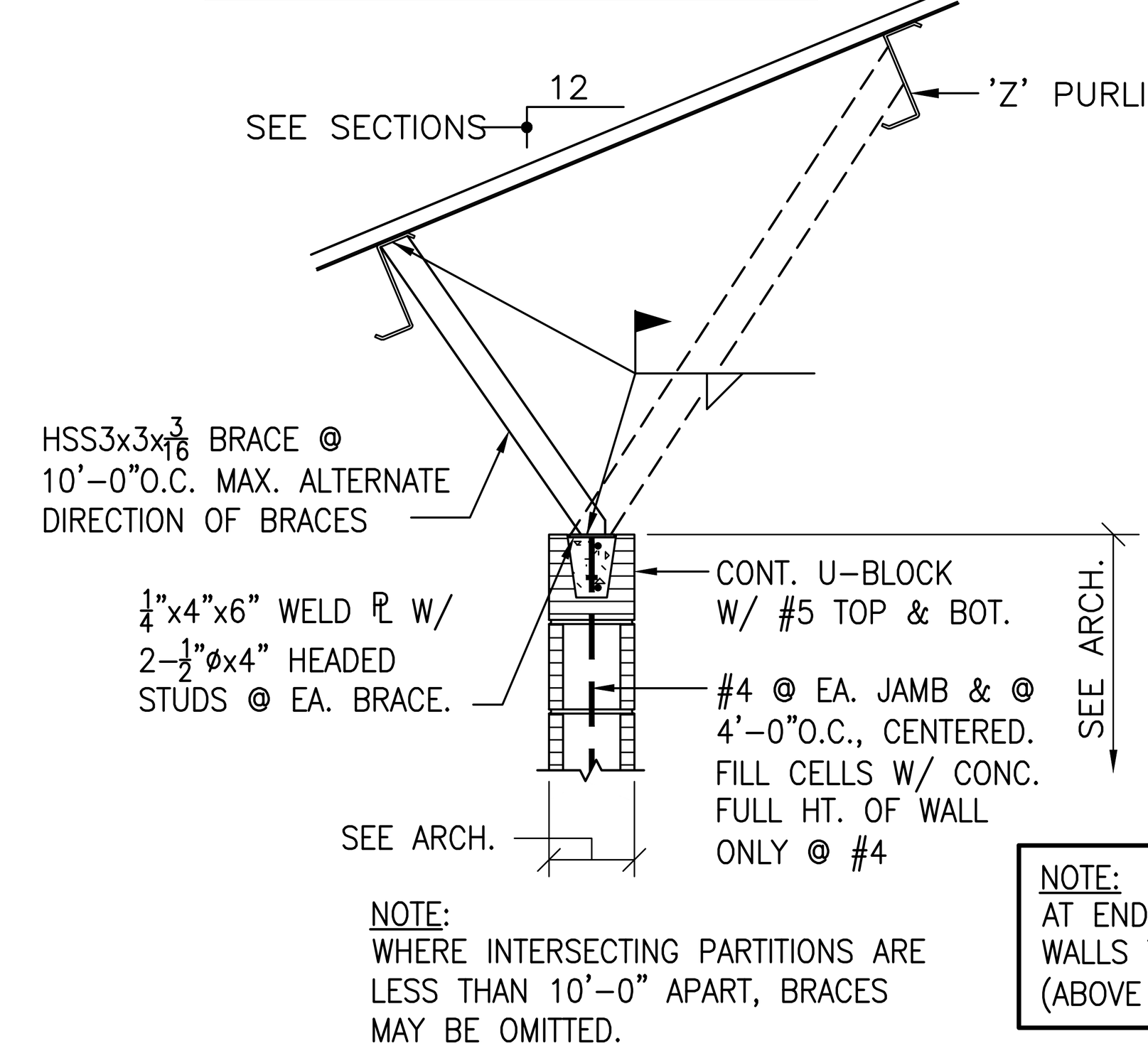

WALL PARALLEL TO PURLINS

NOTE:
AT ENDS OF GYM, BRACE WALLS TO ONE SIDE ONLY (ABOVE LOW CEILING)

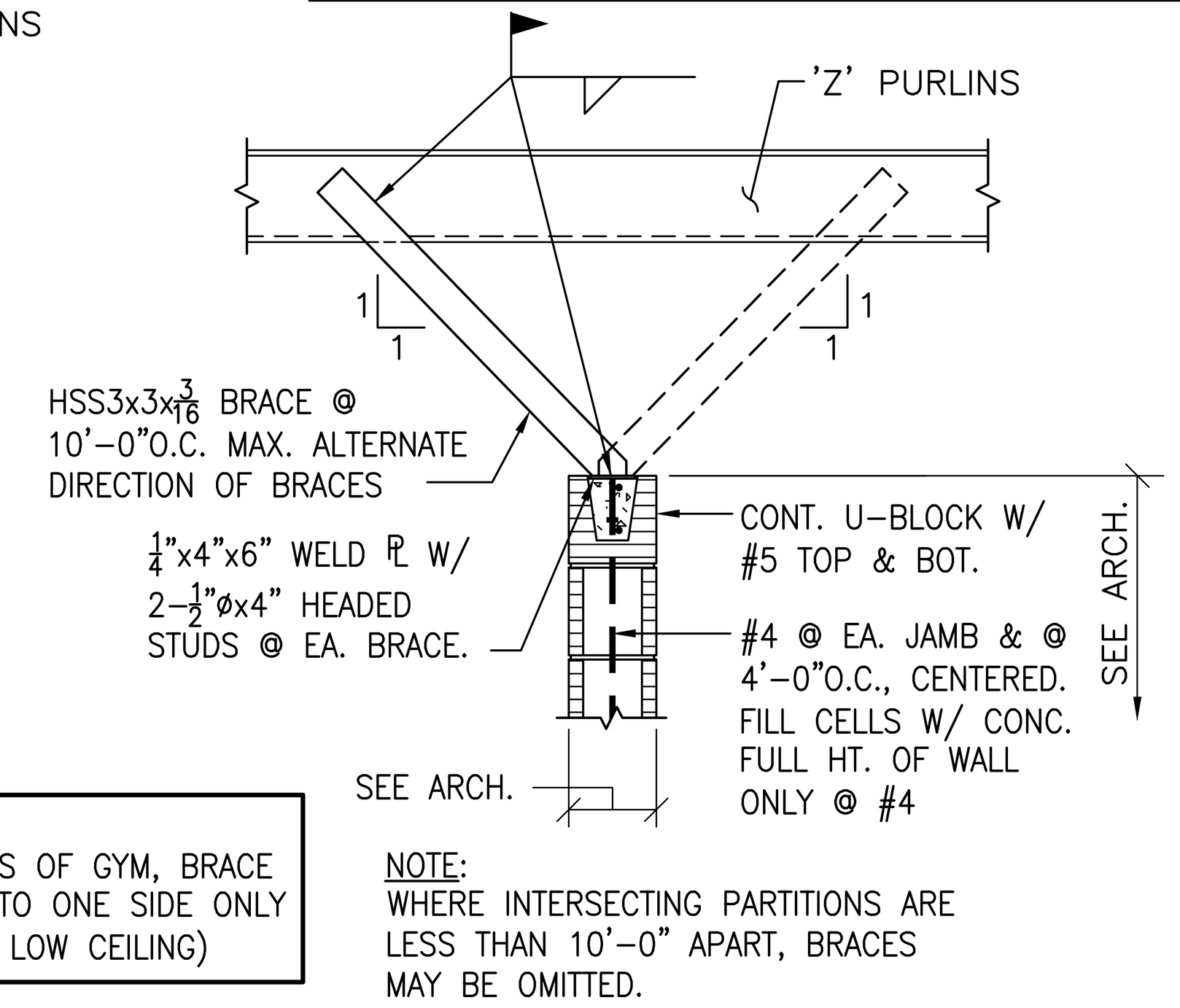

WALL PERPENDICULAR TO PURLINS

TYPICAL C.M.U. PARTITION WALL ANCHORAGE DETAIL

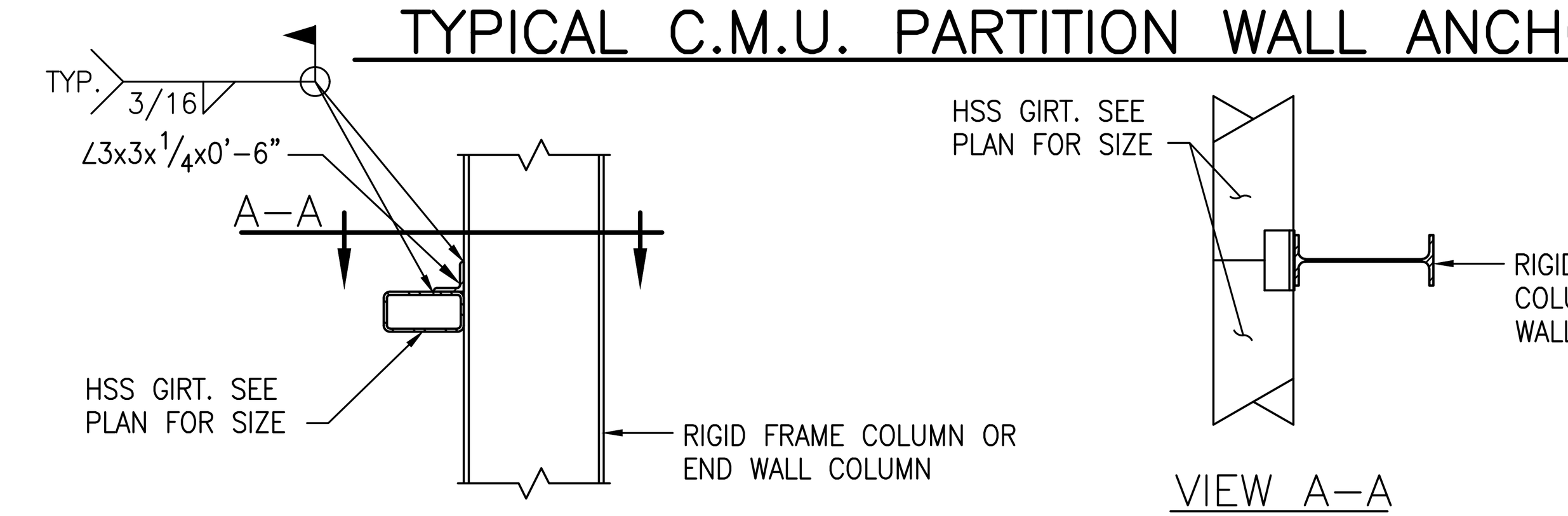

TYPICAL GIRT TO COLUMN CONNECTION DETAIL

(GIRT FRAMING PERPENDICULAR TO COLUMN FLANGE SIMILAR)

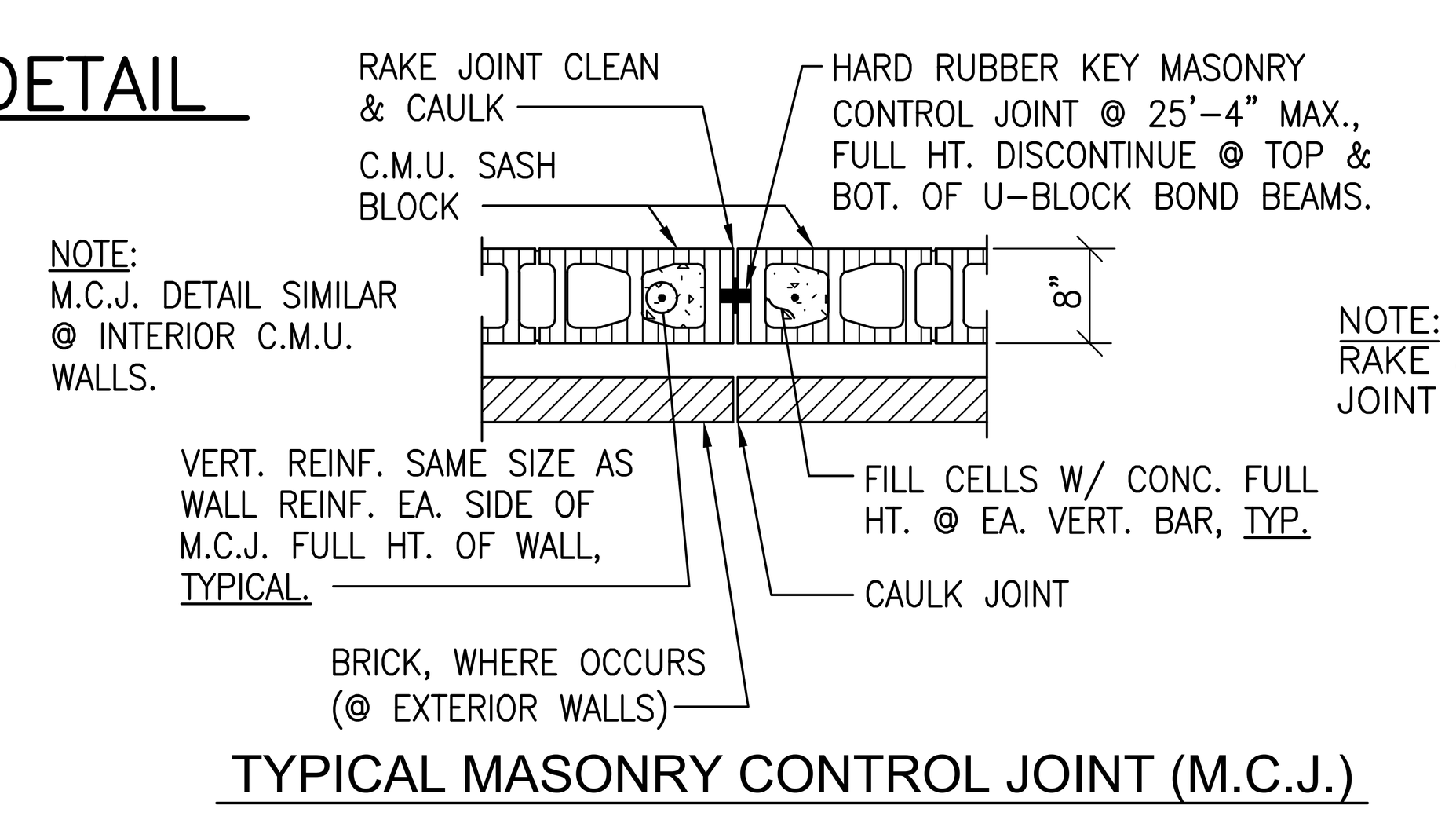

TYPICAL MASONRY CONTROL JOINT (M.C.J.)

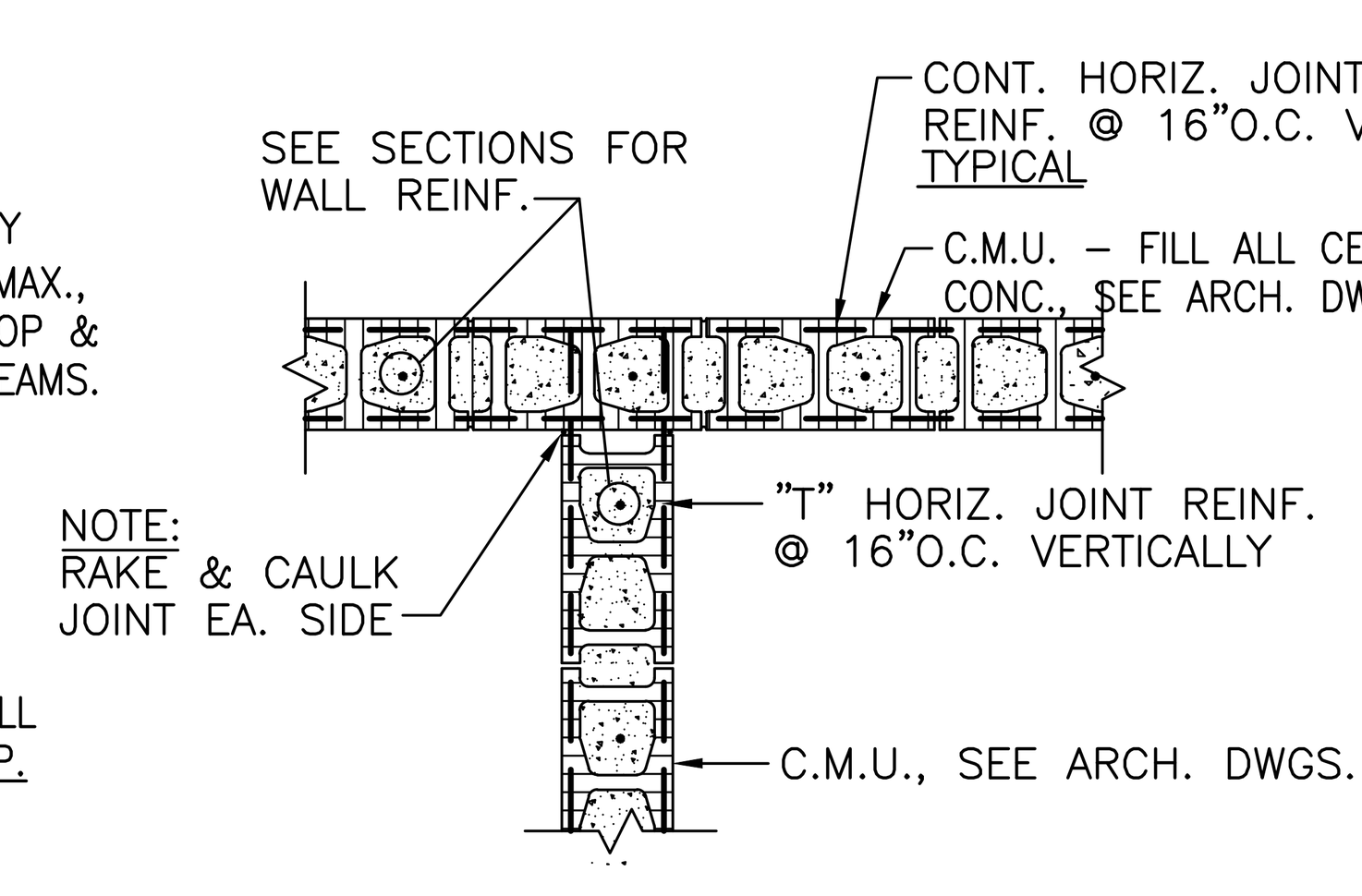

TYPICAL DETAIL AT WALL INTERSECTION

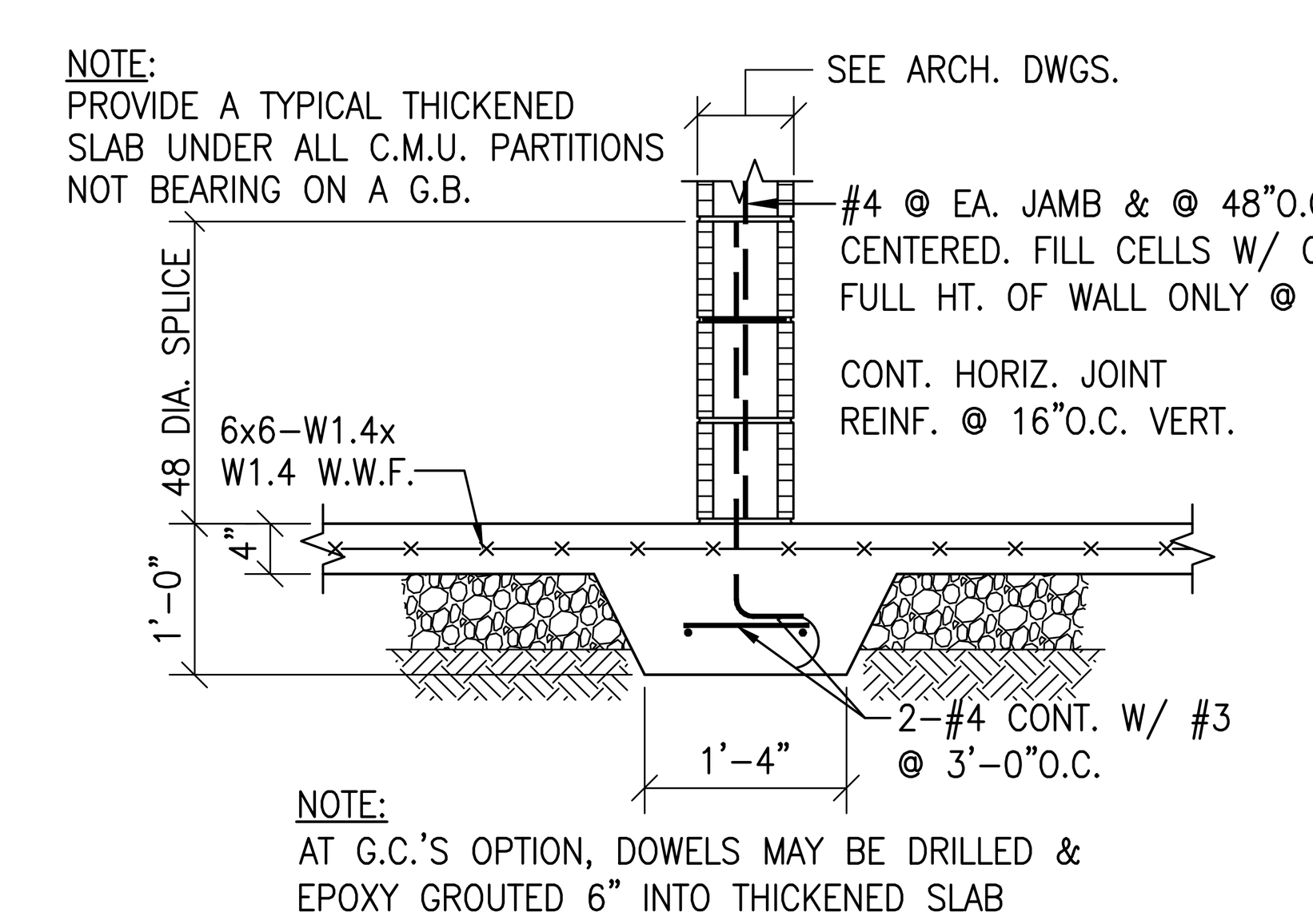

TYPICAL THICKENED SLAB DETAIL

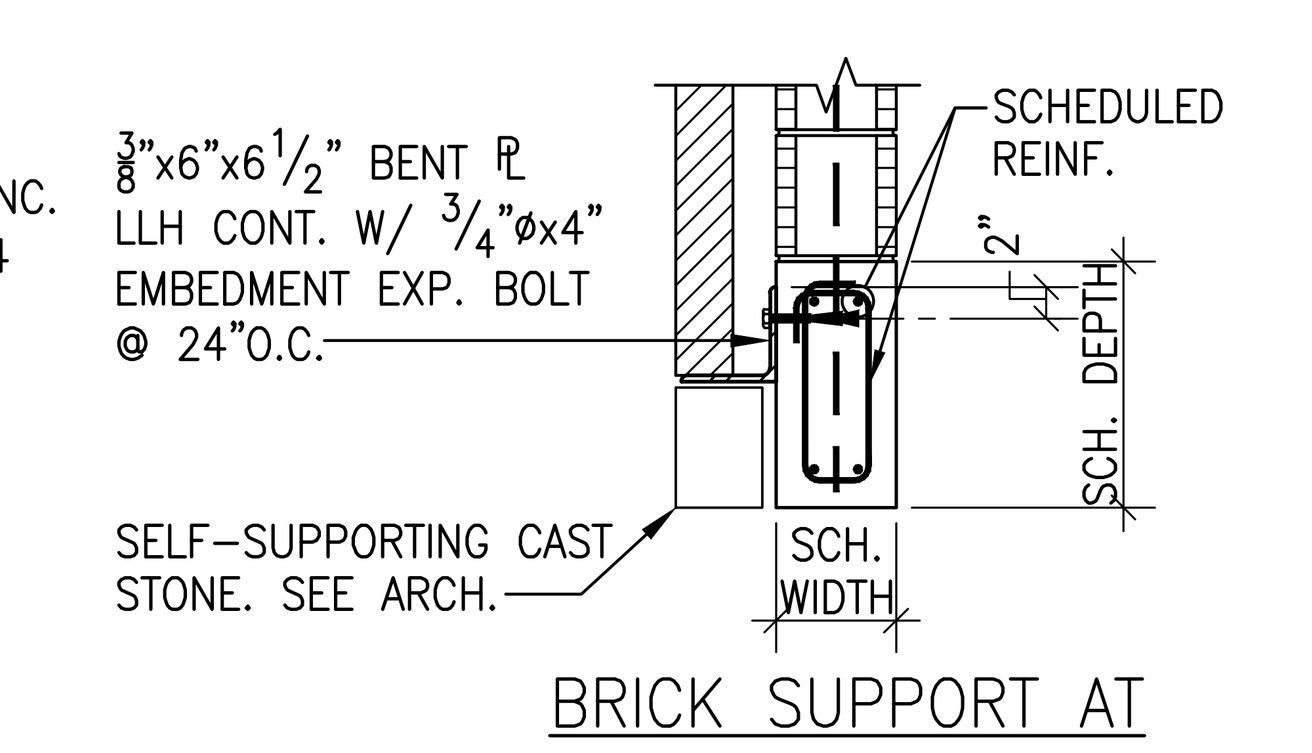

BRICK SUPPORT AT CONCRETE BEAM LINTEL

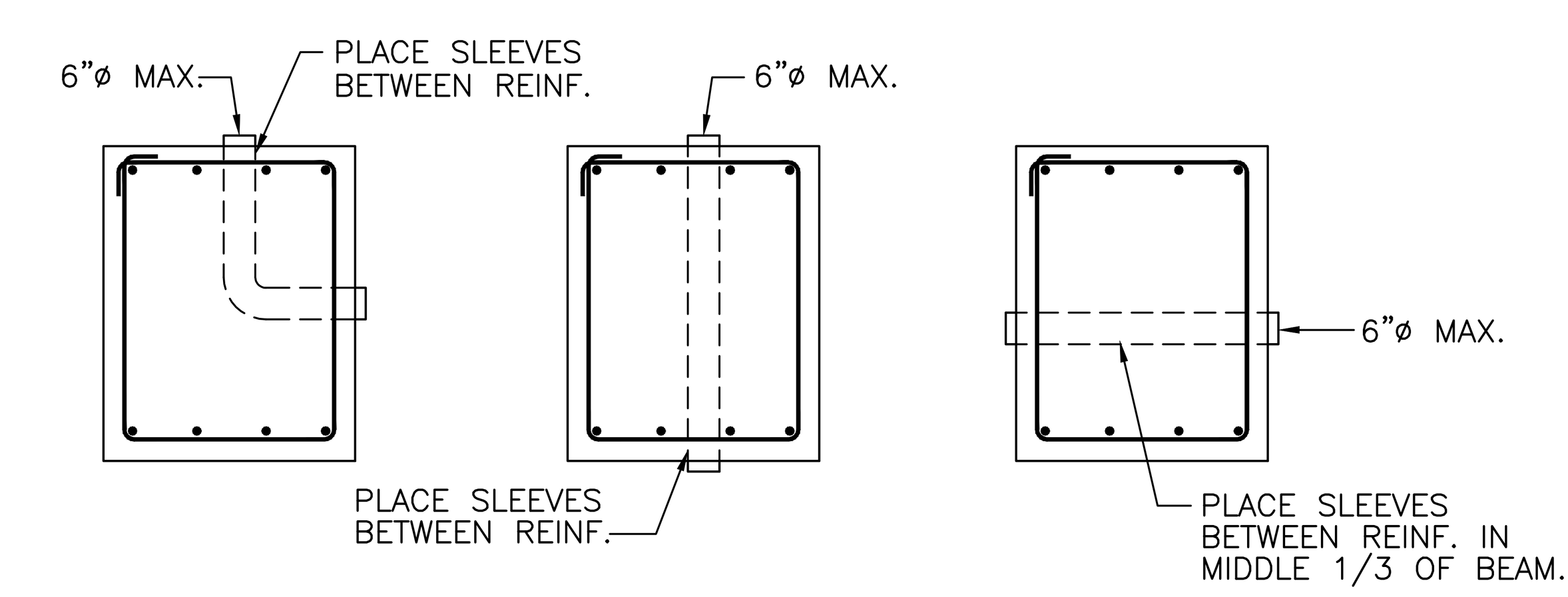

TYPICAL PLUMBING SLEEVE IN GRADE BEAM DETAILS

NOTES:
1. ALL SLEEVES PLACED IN GRADE BEAMS SHALL BE MADE W/ SCHEDULE 40 STEEL PIPE. PROVIDE 3"ø STEEL PIPE SLEEVES @ 2"ø PLUMBING PIPES & 6"ø SLEEVES @ 4"ø PLUMBING PIPES.
2. PLACE PLUMBING PIPE OUTSIDE OF GRADE BEAMS & BELOW GRADE BEAMS WHERE POSSIBLE. ONLY SLEEVE GRADE BEAM WHEN THIS IS NOT POSSIBLE.
3. ALL SLEEVES PENETRATING VERTICALLY THRU TOP OR BOTTOM OF BEAM SHALL REQUIRE APPROVAL FROM BLACKBURN DANIELS O'BARR INC. ALL OTHER PENETRATIONS SHALL BE SUBJECT TO APPROVAL AS DEEMED NECESSARY BY BLACKBURN DANIELS O'BARR.

GENERAL NOTES

FOUNDATION:
1. THE BEARING STRATA OF ALL FOOTINGS AND GRADE BEAMS SHALL BE INSPECTED AND APPROVED BY THE SOILS TESTING LABORATORY PRIOR TO PLACING THE REINFORCING STEEL AND CONCRETE.
2. ALL FOOTINGS SHALL BEAR ON AN UNDISTURBED SOIL STRATA OR COMPACTED FILL CAPABLE OF SUSTAINING THE LOADS.
3. FOOTINGS WERE DESIGNED FOR AN ASSUMED ALLOWABLE SOIL BEARING OF P = 1750 PSF FOR CONTINUOUS STRIP FOOTINGS AND 2100 PSF FOR COLUMN SPREAD FOOTINGS. ALLOWABLE SOIL BEARING SHALL BE VERIFIED BY TESTING AGENCY PRIOR TO FOOTINGS BEING POURED.
4. ELEVATIONS SHOWN ON PLAN ARE TOP OF FOOTINGS AND ARE MINIMUM DEPTH. DIFFERENT OR UNUSUAL CONDITIONS SHALL BE REPORTED TO THE ARCHITECT AND/OR ENGINEER.
5. ALL FOOTING REINFORCEMENT SHALL BE HELD SECURELY FROM THE GROUND. CONCRETE BLOCK AND BROKEN TILE SHALL NOT BE USED. CONCRETE OR CLAY BRICK MAY BE USED.
6. DOWEL ALL FOOTINGS AND WALLS WHERE THEY ABUT WITH SAME STEEL AS VERTICAL.
7. PROVIDE PREFORMED EXPANSION JOINT WHERE SHOWN.
8. IN FOOTINGS PROVIDE CORNER BARS AT ALL EXTERIOR BUILDING CORNERS.
9. DO NOT BACK FILL BEHIND FOUNDATION WALLS UNTIL TOP AND BOTTOM SLABS HAVE BEEN POURED AND ATTAINED THEIR DESIGN STRENGTHS.
10. BACK FILL BOTH SIDES OF FOUNDATION WALLS AT SAME TIME TO PREVENT OVERTURNING.
11. BACK FILL BEHIND ALL RETAINING WALLS SHALL BE AN APPROVED GRANULAR MATERIAL.

CONCRETE:
1. ALL CONCRETE SHALL HAVE A COMPRESSIVE STRENGTH AT 28 DAYS OF F'c = 3000 PSI AND A MAXIMUM WATER-CEMENT RATIO OF 0.53. ALL CONCRETE FOR EXTERIOR APPLICATIONS SHALL CONTAIN ENTRAINED AIR. SEE SPECS FOR ADDITIONAL INFORMATION.
2. REINFORCING STEEL SHALL CONFORM TO ASTM A615 GRADE 60.
3. WELDED WIRE FABRIC SHALL CONFORM TO ASTM A185 OR ASTM A1064.
4. UNLESS NOTED OTHERWISE PROTECTIVE COVERING OF REINFORCEMENT SHALL BE AS FOLLOWS (SEE DETAILS) : FOOTINGS AND GRADE BEAMS 3" CLEAR BOTTOM AND SIDES, 1 1/2" CLEAR TOP. CONCRETE SLABS 3/4" CLEAR. WALLS 1 1/2" CLEAR SIDES. BEAMS 1 1/2" CLEAR TO STIRRUPS. FORMED CONCRETE COLUMNS 1 1/2" CLEAR TO TIES.
5. LAP ALL CONCRETE WALL VERTICAL REINFORCING AND CONCRETE BEAM HORIZONTAL REINFORCING WITH CLASS B LAP SPLICES. SPLICE TIE RODS WITH MECHANICAL SPLICES CAPABLE OF DEVELOPING 125% OF THE BAR YIELD STRENGTH. LAP ALL OTHER CONTINUOUS BARS WITH CLASS A SPLICES UNLESS NOTED OTHERWISE.
6. PLACING PLANS AND DETAILS SHALL BE IN ACCORDANCE WITH THE LATEST "A.C.I. DETAILING MANUAL".
7. STEEL FABRICATOR SHALL SUBMIT SHOP DRAWINGS FOR THE ARCHITECT AND/OR ENGINEER'S REVIEW.
8. DO NOT RUN CONDUITS, RACEWAYS, OR PIPES IN CONCRETE SLABS, BEAMS, OR COLUMNS WITHOUT SPECIFIC APPROVAL FROM BLACKBURN DANIELS O'BARR.

MASONRY:
1. PROVIDE MASONRY HORIZONTAL JOINT REINFORCEMENT 16" O.C. VERTICAL IN ALL CONCRETE BLOCK WALLS. REINFORCEMENT SHALL BE FOR TOTAL WIDTH OF CAVITY WALLS.
2. WHERE CONCRETE OR STEEL BEAMS BEAR ON CONCRETE BLOCK WALLS, BLOCK CELLS SHALL BE FILLED WITH CONCRETE 1'-4" WIDE TO FOUNDATION AND REINFORCED WITH A #5 EACH CELL UNLESS NOTED OR DETAILED OTHERWISE.
3. CONCRETE OR GROUT FOR BLOCK FILL SHALL HAVE 3/8 INCH MAXIMUM SIZE COARSE AGGREGATE AND SUFFICIENT WATER SO THE CONCRETE WILL FLOW INTO THE BLOCK CELLS WITHOUT LEAVING VOIDS. HEIGHT OF LIFT WHEN FILLING CELLS SHALL NOT EXCEED 4'-0".
4. CONCRETE OR GROUT FILL FOR C.M.U. SHALL HAVE A 28 DAY COMPRESSIVE STRENGTH OF F'c = 3000 PSI. ON 16" AND DEEPER U-BLOCKS, FILL CELLS FULL HEIGHT OF LINTEL AT SAME TIME.
5. ANCHOR ALL MASONRY WALLS TO STEEL COLUMNS WITH STRAP ANCHORS AT 16" O.C. VERTICALLY UNLESS SHOWN OTHERWISE.
6. UNLESS INDICATED OTHERWISE PROVIDE KEYED RUBBER MASONRY CONTROL JOINTS AT A MAXIMUM SPACING OF 25'-4". JOINT SHALL BE DISCONTINUOUS AT BOND BEAM. COORDINATE EXACT LOCATIONS WITH ARCHITECT.
7. PROVIDE REINFORCING BAR SUPPORTS TO CENTER VERTICAL REINFORCING IN MASONRY WALLS.
8. PROVIDE 48 DIAMETER LAP SPLICE IN VERTICAL MASONRY REINFORCING.
9. PROVIDE CORNER BARS IN U-BLOCK BOND BEAMS AT CORNERS, TYPICAL.
10. ALL CMU SHALL BE PLACED IN A RUNNING BOND PATTERN UNLESS NOTED OTHERWISE ON ARCHITECTURAL DRAWINGS.
11. VERTICAL REINFORCING SHALL BE CONTINUOUS THROUGH BOND BEAMS AND LINTELS (CUT OUT OR NOTCH BOTTOM OF U-BLOCKS AS REQUIRED -- DO NOT SUBSTITUTE BLOCK WITH KNOCK-OUT WEBS WHERE STANDARD U-BLOCK IS INDICATED). FOR BOND BEAMS AT TOP OF WALL, EXTEND VERTICAL REINFORCING TO 1" CLEAR TOP OF BOND BEAM.

STRUCTURAL STEEL:
1. ALL STRUCTURAL STEEL W AND WT SHAPES SHALL CONFORM TO ASTM A992 (GRADE 50). OTHER SHAPES (EXCEPT TUBE SECTIONS) SHALL CONFORM TO ASTM, A36, LATEST EDITION.
2. STRUCTURAL STEEL TUBE SECTIONS SHALL CONFORM TO ASTM A500, GRADE B, Fy = 46.0 KSI.
3. HEADED STUDS SHALL BE TYPE B SHEAR CONNECTORS (Fu = 65 KSI).
4. STEEL FABRICATOR SHALL SUBMIT SHOP DRAWINGS FOR THE ARCHITECT AND/OR ENGINEER'S REVIEW.
5. THE CONTRACTOR SHALL VERIFY ALL SHOP DRAWINGS DIMENSIONS WITH STRUCTURAL AND ARCHITECTURAL PLANS AND DETAILS.
6. BOLTED CONNECTIONS SHALL BE MADE WITH HIGH STRENGTH BOLTS CONFORMING TO ASTM A325. USE 3/4 INCH DIAMETER MINIMUM.
7. CONNECTIONS NOT SHOWN ON DRAWINGS SHALL BE DESIGNED BY THE FABRICATOR. WHERE POSSIBLE USE DOUBLE ANGLE CONNECTIONS. USE MAXIMUM NUMBER OF BOLTS FOR DEPTH OF BEAM WITH SINGLE ROW OF BOLTS.

PRE-ENGINEERED METAL BUILDING:
1. THE COMPLETE DESIGN OF METAL BUILDING INCLUDING ALL COMPONENTS SHOWN OR NOT SHOWN ON THE DRAWINGS SHALL BE ACCOMPLISHED BY THE BUILDING MANUFACTURER.
2. THE DESIGN SHALL BE MADE BY A REGISTERED ENGINEER, REGISTERED IN THE STATE OF ALABAMA AND HE SHALL AFFIX HIS REGISTRATION NUMBER TO ALL SHOP DRAWINGS AND CALCULATIONS.
3. THE BUILDING AND ALL OF ITS COMPONENTS SHALL BE DESIGNED FOR THE FOLLOWING DEAD AND LIVE LOADS;
   a.) ACTUAL WEIGHT OF STEEL STRUCTURE.
   b.) 8 PSF DEAD (COLLATERAL) LOAD IN ADDITION TO ACTUAL WEIGHT OF STRUCTURE AND ROOFING MATERIALS.
   c.) 20 PSF ROOF LIVE LOAD.
   d.) ANY ADDITIONAL LOADS AND REACTIONS THAT ARE SHOWN ON THE DRAWINGS.
   e.) WIND LOADING AS REQUIRED BY INTERNATIONAL BUILDING CODE.
4. NO LIVE LOAD REDUCTION SHALL BE TAKEN FOR THE DESIGN OF THE RIGID FRAMES.
5. WHERE MEMBER SIZES AND GAGES ARE SHOWN THEY SHALL BE CONSIDERED A MINIMUM SIZE. THE MANUFACTURER SHALL NOT USE SMALLER SIZE OR LIGHTER GAGES, OR OMIT FRAMING WHERE INDICATED. HE SHALL USE ONLY LARGER SIZE AND HEAVIER GAGES IF HIS DESIGN INDICATES THESE ARE REQUIRED TO MEET THE LOADING CRITERIA
6. THE DEFLECTION OF GIRTS SHALL BE LIMITED TO 1/360 OF THE SPAN AND DEFLECTION OF PURLINS SHALL BE LIMITED TO 1/240 OF THE SPAN. DEFLECTION OF RIGID FRAMES SHALL BE LIMITED TO 1/240 OF THE SPAN. DEFLECTIONS SHALL BE BASED ON TOTAL LOAD (DEAD PLUS LIVE LOADS). TOTAL RIGID FRAME DRIFT SHALL BE LIMITED TO H/360, WHERE H IS EQUAL TO THE EAVE HEIGHT.
7. COLUMN BASES SHALL BE DESIGNED AS PINNED CONNECTIONS. MOMENTS AT COLUMN BASE PLATES ARE NOT ACCEPTABLE.
8. PROVIDE ROD X-BRACING (WITH COLUMN STIFFENERS OR BRACES AS REQUIRED) TO TRANSFER SHEAR INTO HSS GIRTS AT TOP OF CMU SHEAR WALLS.

CODES:
ALL PARTS SHALL BE FURNISHED AND ERECTED ACCORDING TO THE APPLICABLE CODES AND SPECIFICATIONS OF THE FOLLOWING:
AMERICAN CONCRETE INSTITUTE (ACI)
AMERICAN INSTITUTE OF STEEL CONSTRUCTION (AISC)
AMERICAN WELDING SOCIETY (AWS)
OSHA STEEL ERECTION STANDARD (OSHA)
INTERNATIONAL BUILDING CODE (IBC 2021) (ICC)

DESIGN LIVE LOADS:
ROOF.......20 PSF.
WIND.......INTERNATIONAL BUILDING CODE (PER ASCE 7-16)
WIND EXPOSURE............................C
RISK CATEGORY (PER IBC 2021/ASCE 7-16)..........III
ULTIMATE DESIGN WIND SPEED (Vult).........165 MPH
NOMINAL DESIGN WIND SPEED (Vasd)..........128 MPH
INTERNAL PRESSURE COEFFICIENTS............+/-0.18
SEISMIC....INTERNATIONAL BUILDING CODE (PER ASCE 7-16)
SEISMIC IMPORTANCE FACTOR.................Ie=1.25
MAPPED SPECTRAL ACCELERATION (SHORT-TERM).Ss=0.088g
MAPPED SPECTRAL ACCELERATION (1-SECOND)...S1=0.057g
SITE CLASS...............................D
SHORT-PERIOD SPECTRAL RESPONSE ACCEL......Sds=0.094g
1-SECOND SPECTRAL RESPONSE ACCEL..........Sd1=0.092g
SEISMIC DESIGN CATEGORY...................B
SEISMIC FORCE-RESISTING SYSTEM(S):
STEEL RIGID MOMENT FRAMES
STEEL ROD X-BRACING
CMU SHEAR WALLS
DESIGN BASE SHEAR (ULTIMATE)..............58.2k
SEISMIC RESPONSE COEFFICIENT..............Cs=0.052
RESPONSE MODIFICATION FACTOR..............R=3
ANALYSIS PROCEDURE........................ASCE 7 (SECT 12.8)

SNOW.......INTERNATIONAL BUILDING CODE
GROUND SNOW LOAD..........................Pg=0 PSF

COMPONENTS AND CLADDING ULTIMATE WIND PRESSURES:
NOTE: MULTIPLY ALL VALUES SHOWN BELOW BY 0.6 TO GET ALLOWABLE DESIGN PRESSURES. SEE FIGURE 30.4-1 OF ASCE 7-16 FOR INDICATED ZONES.

ROOF:TRIBUTARY AREA A = 10 SF
ZONE 1: -130.4 PSF/42.8 PSF
ZONE 2e: -130.4 PSF/42.8 PSF
ZONE 2n: -190.2 PSF/42.8 PSF
ZONE 2r: -190.2 PSF/42.8 PSF
ZONE 3e: -190.2 PSF/42.8 PSF
ZONE 3r: -226.1 PSF/42.8 PSF
ROOF:TRIBUTARY AREA A = 100 SF
ZONE 1: -40.7 PSF/28.7 PSF
ZONE 2e: -40.7 PSF/28.7 PSF
ZONE 2n: -104.7 PSF/28.7 PSF
ZONE 2r: -104.7 PSF/28.7 PSF
ZONE 3e: -104.7 PSF/28.7 PSF
ZONE 3r: -118.4 PSF/28.7 PSF
WALL:TRIBUTARY AREA A = 10 SF
ZONE 4: -76.6 PSF/70.6 PSF
ZONE 5: -94.5 PSF/70.6 PSF
WALL:TRIBUTARY AREA A = 50 SF
ZONE 4: -69.2 PSF/63.2 PSF
ZONE 5: -79.7 PSF/63.2 PSF
WALL:TRIBUTARY AREA A = 100 SF
ZONE 4: -66.0 PSF/60.0 PSF
ZONE 5: -73.4 PSF/60.0 PSF
CORNER ZONE = 12.4 FT

SPECIAL INSPECTIONS:
ALL SPECIAL INSPECTIONS REQUIRED BY CHAPTER 17 OF IBC SHALL BE PERFORMED BY A DESIGNATED TESTING AGENCY OR AGENCIES RESPONSIBLE FOR SPECIAL INSPECTIONS.

WIND REQUIREMENTS FOR SPECIAL INSPECTIONS:
1. THE FOLLOWING STRUCTURAL COMPONENTS ARE DESIGNATED AS WIND SYSTEMS AND/OR PART OF THE MAIN WINDFORCE-RESISTING SYSTEM OF THE BUILDING AND ARE SUBJECT TO THE REQUIREMENTS OF SECTION 1705.12 OF IBC 2021 AND PROJECT SPECIFICATIONS:
ROOF DIAPHRAGM SYSTEM AND ATTACHMENT
STEEL MOMENT FRAMES AND ROD X-BRACING INCLUDING CONNECTIONS
CMU WALLS INCLUDING ANCHORAGE TO FOUNDATION
THESE SPECIFIC COMPONENTS ARE IN ADDTION TO ALL GENERAL COMPONENTS LISTED IN SECTION 1705.12 OF IBC 2021 AND ARE SUBJECT TO ALL SPECIAL INSPECTIONS AND TESTING AS REQUIRED BY CHAPTER 17 OF IBC 2021, PROJECT SPECIFICATIONS, AND SCHEDULE OF SPECIAL INSPECTIONS. SPECIAL INSPECTION REPORTS SHALL BE SUBMITTED AS PER THE STATEMENT OF SPECIAL INSPECTIONS.
2. OTHER ARCHITECTURAL COMPONENTS AND THEIR ANCHORAGES MAY ALSO BE DESIGNATED AS WIND-RESISTING COMPONENTS. SEE OTHER DISCIPLINE'S DRAWINGS AND SPECIFICATIONS.

ADDITIONS
TO
ROBERTSDALE HIGH SCHOOL
ROBERTSDALE, ALABAMA
FOR THE
BALDWIN COUNTY BOARD OF EDUCATION

McKEE & ASSOCIATES
ARCHITECTS, INC.
631 SOUTH HULL STREET, MONTGOMERY, ALABAMA 36104 (334) 834-9933



SHEET TITLE :	GENERAL NOTES, SCHEDULES, AND TYPICAL DETAILS
MCKEE JOB # :	23-195
DRAWN BY :	RAS
DATE:	10.11.2023
REVISED DATE:	
REVISED DATE:	
REVISED DATE:	
SHEET NO. :	S0.1

S:\MCKEE\Robertsdale HS add\n\S-Robertsdale HS addn - Sections.dwg
- Friday, October 13, 2023 1:25:20 PM

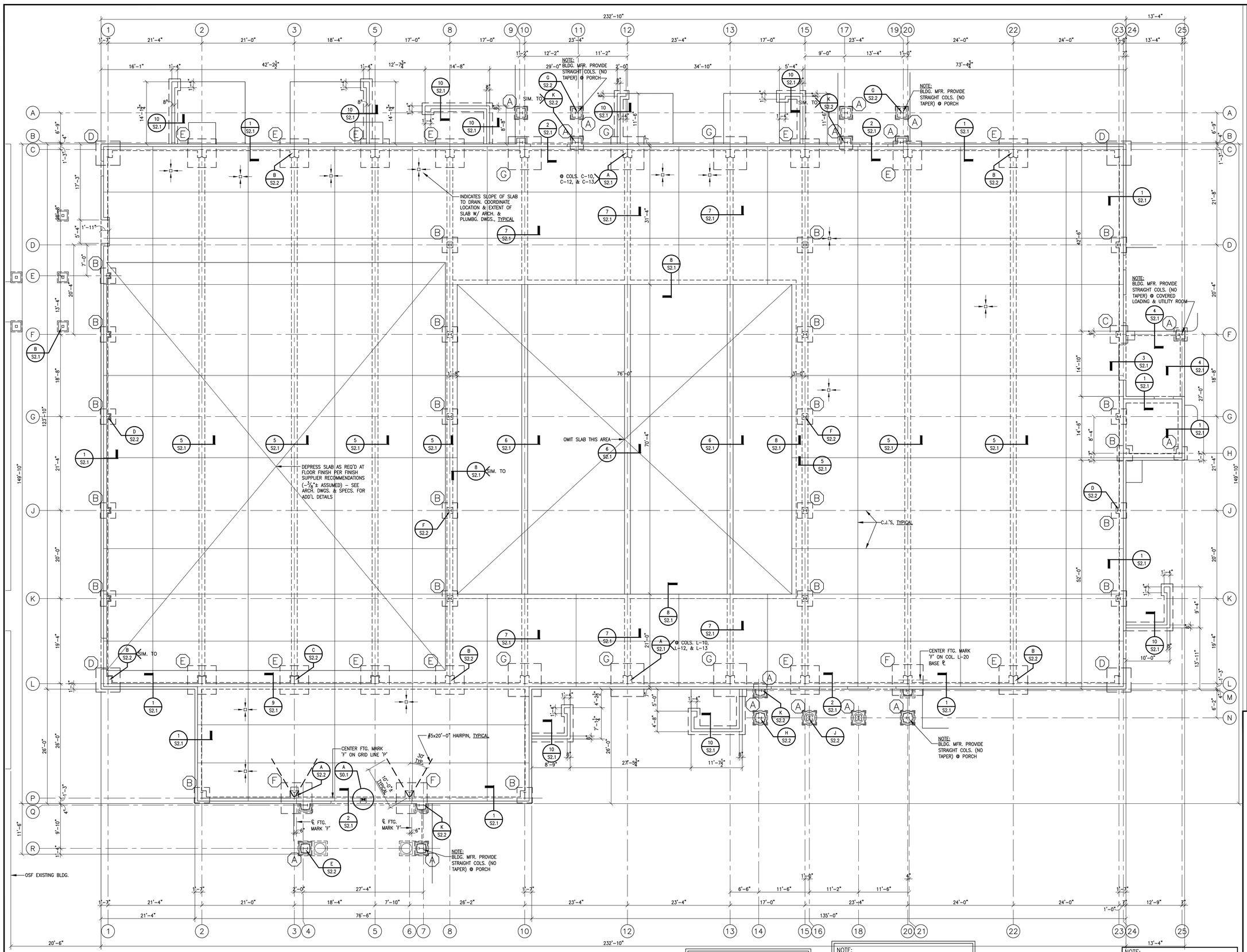

FOUNDATION PLAN

SCALE: 1/8" = 1'-0"

FLOOR CONSTRUCTION

4" THICK CONCRETE SLAB W/ 6x6-W1.4xW1.4 W.W.F. OVER VAPOR BARRIER OVER 6" POROUS FILL.

FINISH FLOOR ELEVATION = 142'-6 1/2"

NOTE:
UNLESS NOTED OTHERWISE, TOP OF COLUMN FOOTING EL. = 139'-10 1/2"

TOP OF PIER (T.O.P.) EL. SHALL BE (-0'-8") UNLESS NOTED OTHERWISE. EXTEND VERT. REINF. TO 1" BELOW TOP OF SLAB

NOTE:
PROVIDE A TYPICAL THICKENED SLAB UNDER ALL C.M.U. PARTITIONS NOT BEARING ON A FOOTING. SEE SHEET S0.1 FOR TYPICAL DETAIL.

NOTE:
PROVIDE M.C.J.'S @ 25'-4" MAXIMUM SPACING. SEE MASONRY GENERAL NOTE "6" ON SHT. S0.1 & TYPICAL MASONRY CONTROL JOINT DETAIL ON SHEET S0.1. COORDINATE EXACT LOCATIONS W/ ARCH.

ADDITIONS TO ROBERTSDALE HIGH SCHOOL

ROBERTSDALE, ALABAMA

FOR THE

BALDWIN COUNTY BOARD OF EDUCATION

McKEE & ASSOCIATES
ARCHITECTS, INC.
631 SOUTH HULL STREET, MONTGOMERY, ALABAMA 36104 (334) 834-9933

ALABAMA REGISTERED NO. 22214 PROFESSIONAL ENGINEER RICHARD MARK 10-11-23

SHEET TITLE : FOUNDATION PLAN

MCKEE JOB # : 23-195

DRAWN BY : RAS

DATE: 10.11.2023

REVISED DATE:

REVISED DATE:

REVISED DATE:

SHEET NO. : S1.1

- S:\MCKEE\Robertsdale HS addn\S-Robertsdale HS addn - Plans.dwg
- Friday, October 13, 2023 1:25:22 PM

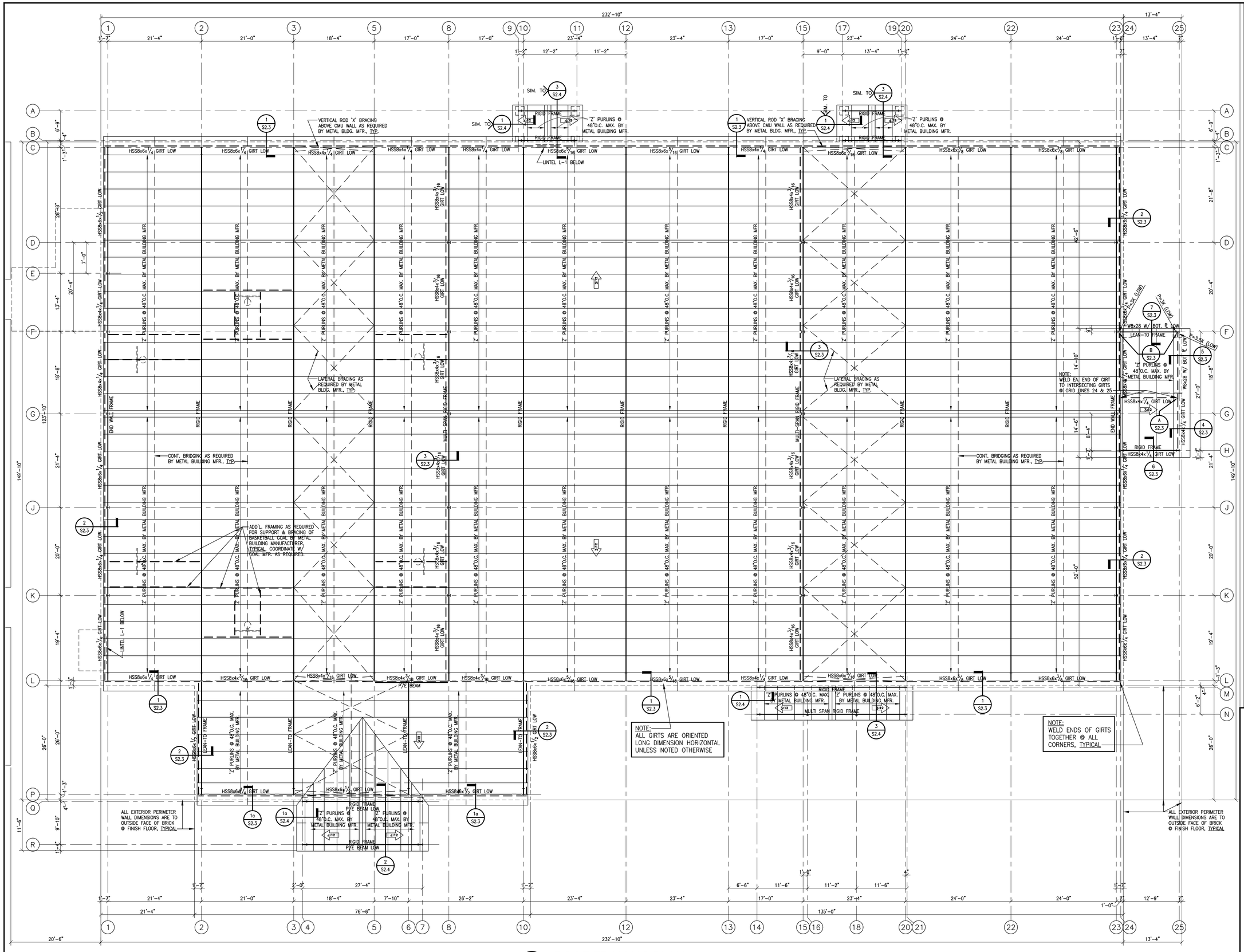

ROOF FRAMING PLAN
SCALE: 1/8" = 1'-0"

ADDITIONS
TO
ROBERTSDALE HIGH SCHOOL
ROBERTSDALE, ALABAMA
FOR THE
BALDWIN COUNTY BOARD OF EDUCATION

McKEE & ASSOCIATES
ARCHITECTS, INC.
631 SOUTH HULL STREET, MONTGOMERY, ALABAMA 36104 (334) 834-9933

ALABAMA REGISTERED PROFESSIONAL ARCHITECT NO. 22214 RICHARD MARK 10-11-23

SHEET TITLE : ROOF FRAMING PLAN

MCKEE JOB # : 23-195

DRAWN BY : RAS

DATE: 10.11.2023

REVISED DATE:

REVISED DATE:

REVISED DATE:

SHEET NO. : S1.2

- S:\MCKEE\Robertsdale HS addn\S-Robertsdale HS addn - Plans.dwg
- Friday, October 13, 2023 1:25:22 PM

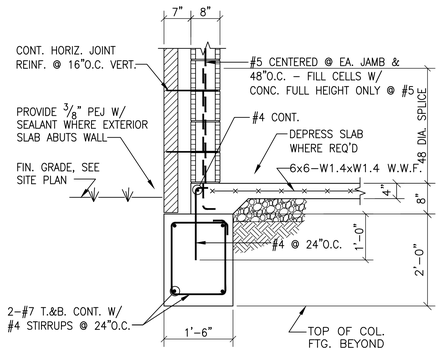

SECTION 3/4"=1'–0" (1 S2.1)

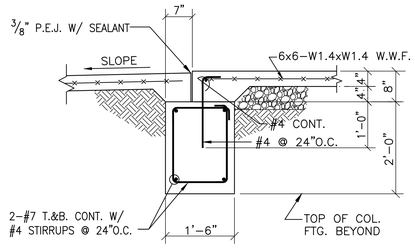

SECTION 3/4"=1'–0" (2 S2.1)

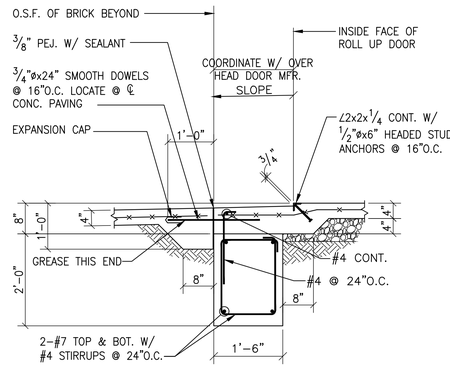

SECTION 3/4"=1'–0" (3 S2.1)

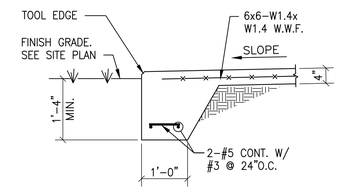

SECTION 3/4"=1'–0" (4 S2.1)

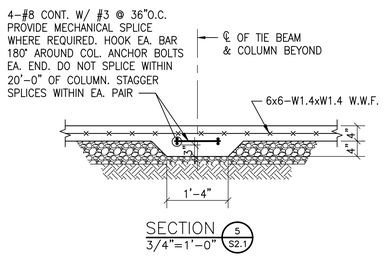

SECTION 3/4"=1'–0" (5 S2.1)

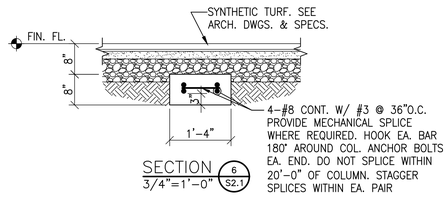

SECTION 3/4"=1'–0" (6 S2.1)

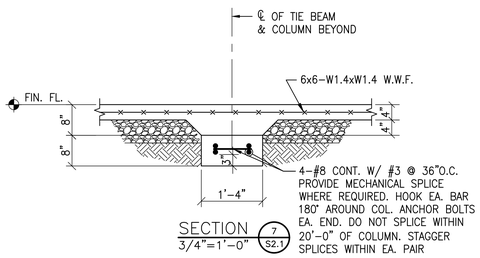

SECTION 3/4"=1'–0" (7 S2.1)

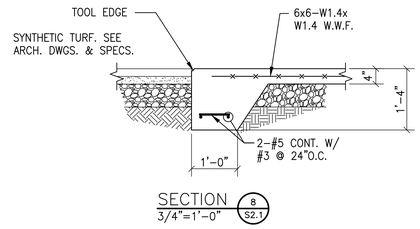

SECTION 3/4"=1'–0" (8 S2.1)

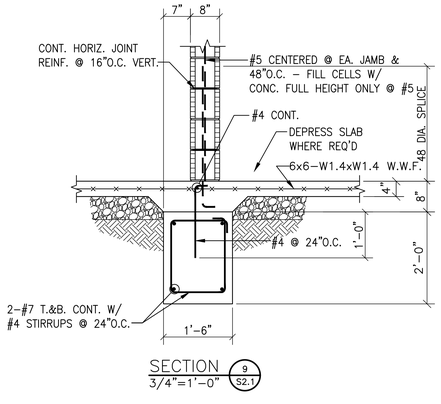

SECTION 3/4"=1'–0" (9 S2.1)

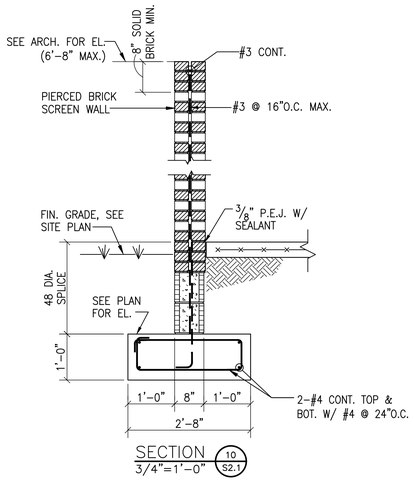

SECTION 3/4"=1'–0" (10 S2.1)

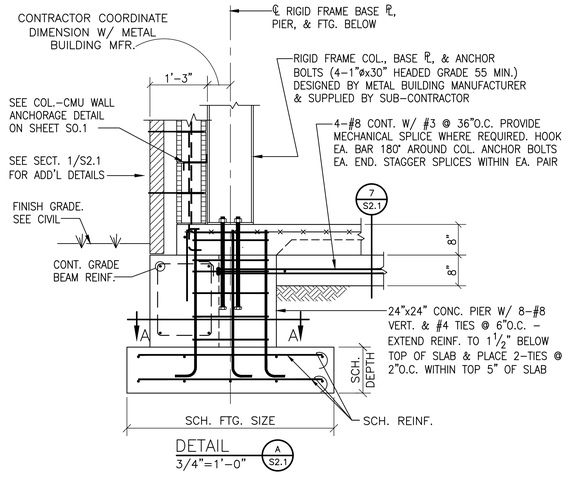

DETAIL 3/4"=1'–0" (A S2.1)

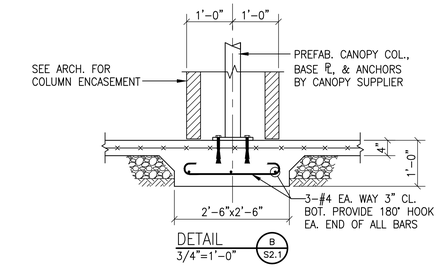

DETAIL 3/4"=1'–0" (B S2.1)

ADDITIONS
TO
ROBERTSDALE HIGH SCHOOL
ROBERTSDALE, ALABAMA
FOR THE
BALDWIN COUNTY BOARD OF EDUCATION

McKEE & ASSOCIATES
ARCHITECTS, INC.
631 SOUTH HULL STREET . MONTGOMERY . ALABAMA 36104 (334) 834-9933

STATE OF ALABAMA REGISTERED ARCHITECT NO. 22214 ROBERT A. SPEARS, JR. ARCHITECT
ISSUED FOR PERMIT 10/11/23

SHEET TITLE : SECTIONS AND DETAILS

MCKEE JOB # : 23-195

DRAWN BY : RAS

DATE: 10.11.2023

REVISED DATE:

REVISED DATE:

REVISED DATE:

SHEET NO. : S2.1

S:\MCKEE\Robertsdale HS addn\Robertsdale HS addn - sections.dwg
Friday, October 13, 2023 1:25:27 PM

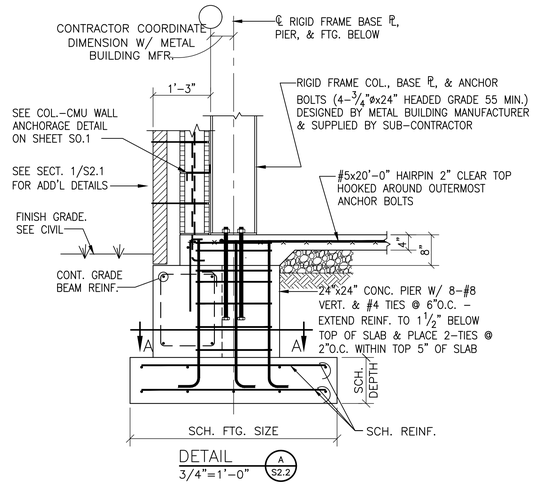

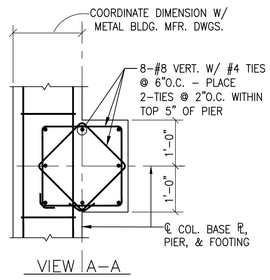

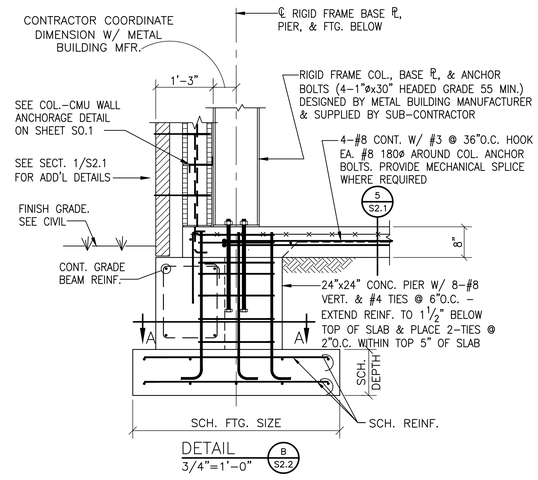

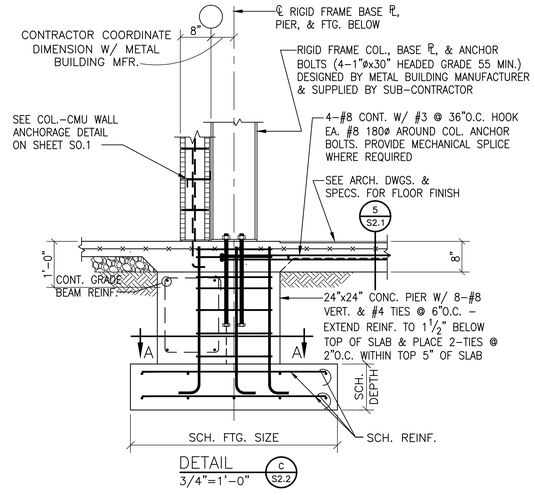

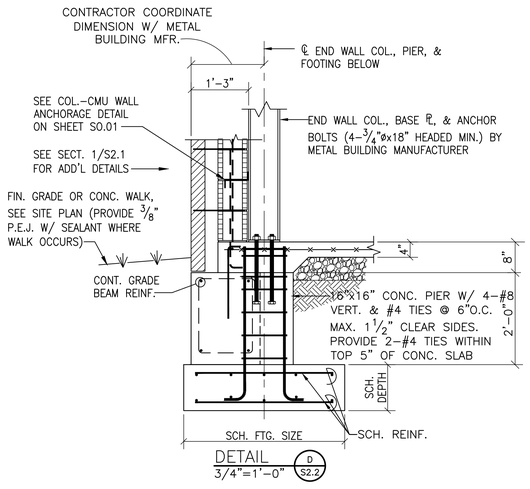

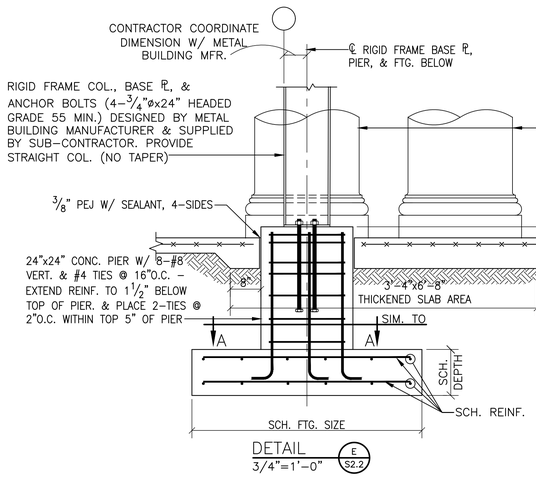

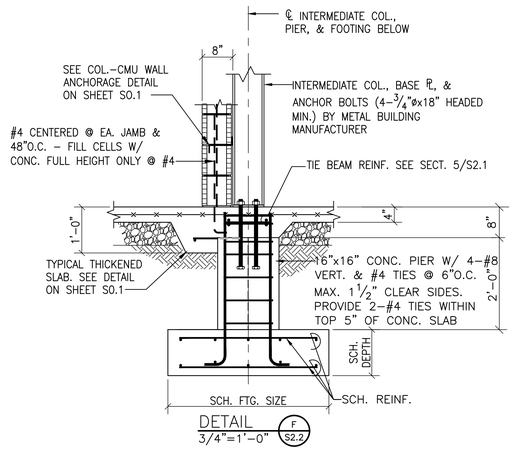

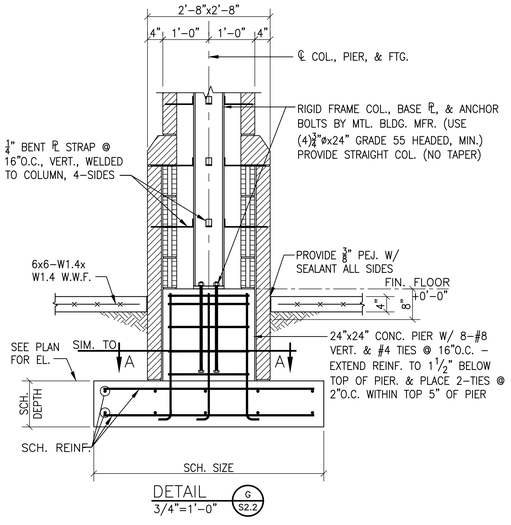

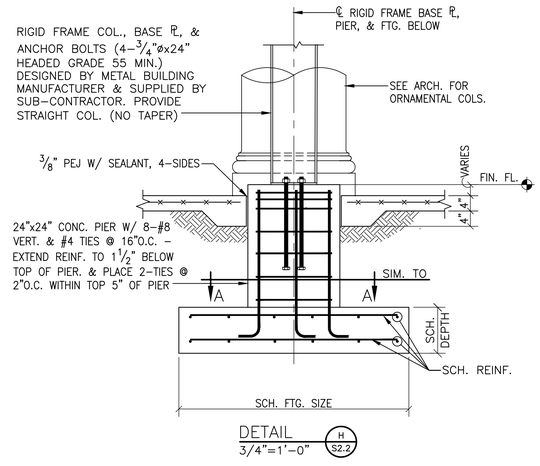

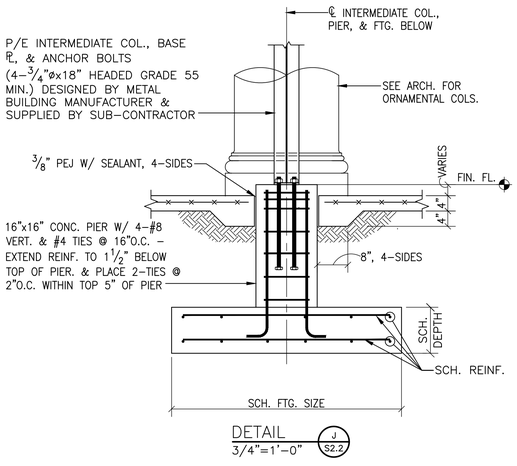

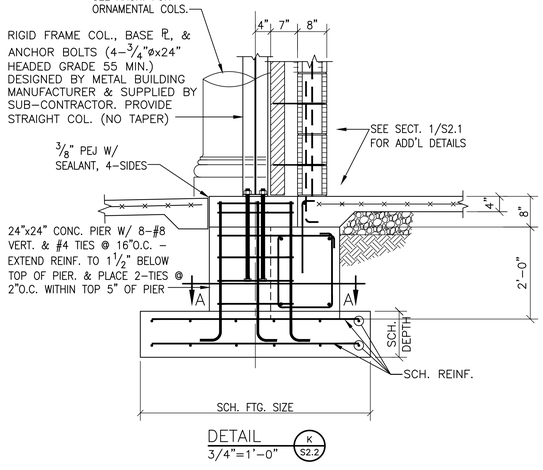

ADDITIONS
TO
ROBERTSDALE HIGH SCHOOL
ROBERTSDALE, ALABAMA
FOR THE
BALDWIN COUNTY BOARD OF EDUCATION

McKEE & ASSOCIATES
ARCHITECTS, INC.
631 SOUTH HULL STREET . MONTGOMERY . ALABAMA 36104 (334) 834-9933

ALABAMA REGISTERED ARCHITECT NO. 22214 RICHARD A. SMITH MAID. MARK 10/11/23

SHEET TITLE :	SECTIONS AND DETAILS
MCKEE JOB # :	23-195
DRAWN BY :	RAS
DATE:	10.11.2023
REVISED DATE:	
REVISED DATE:	
REVISED DATE:	

SHEET NO. : S2.2

- S:\Mutek\Kodensgale HS addn\s-kodensgale HS addn - sections.dwg
- Friday, October 13, 2023 1:25:27 PM

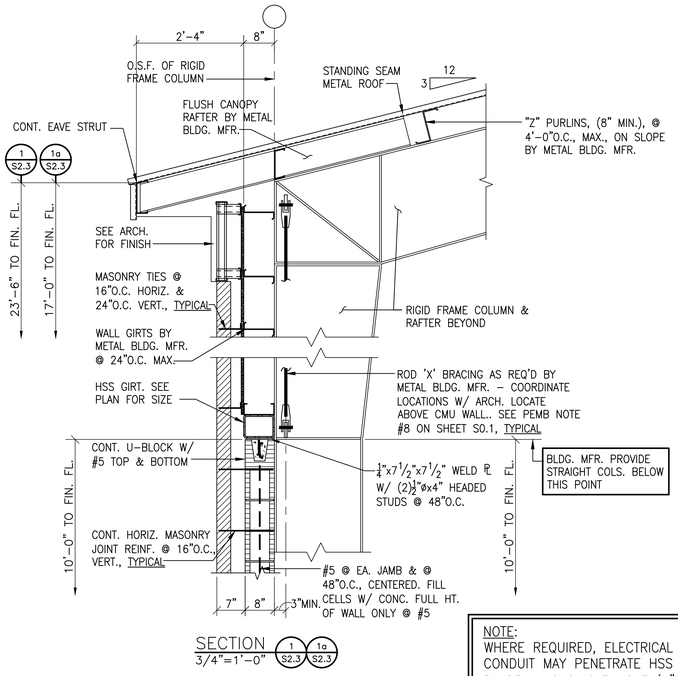

SECTION 3/4"=1'-0" (1 S2.3 / 1a S2.3)

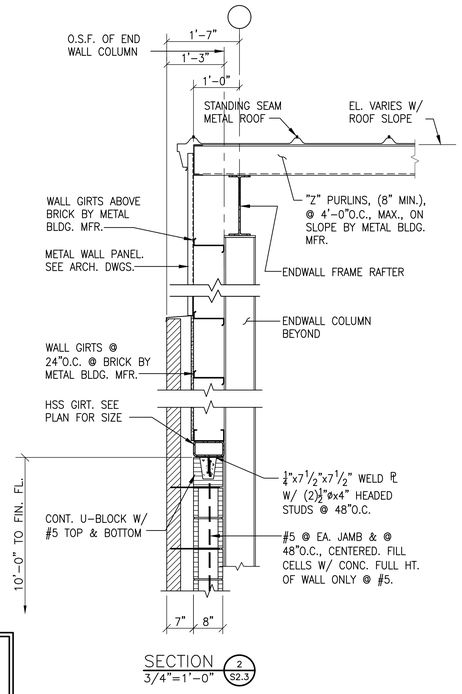

SECTION 3/4"=1'-0" (2 S2.3)

NOTE:
WHERE REQUIRED, ELECTRICAL CONDUIT MAY PENETRATE HSS GIRT BY DRILLING SINGLE HOLE (1"ø MAX.) THRU TOP & BOT. FACE OF GIRT NEAR CENTER OF WALL. DO NOT CUT SIDES OF GIRT.

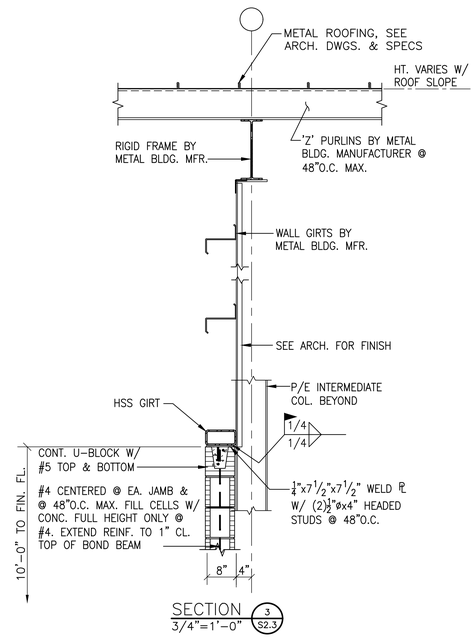

SECTION 3/4"=1'-0" (3 S2.3)

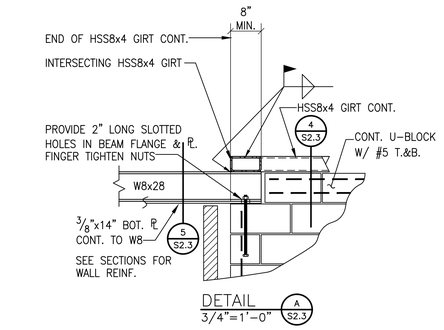

DETAIL 3/4"=1'-0" (A S2.3)

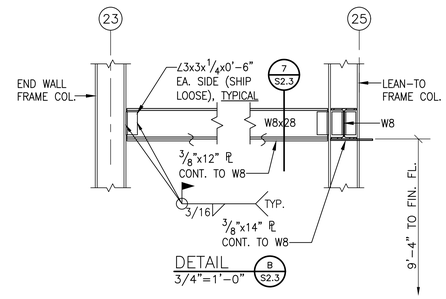

DETAIL 3/4"=1'-0" (B S2.3)

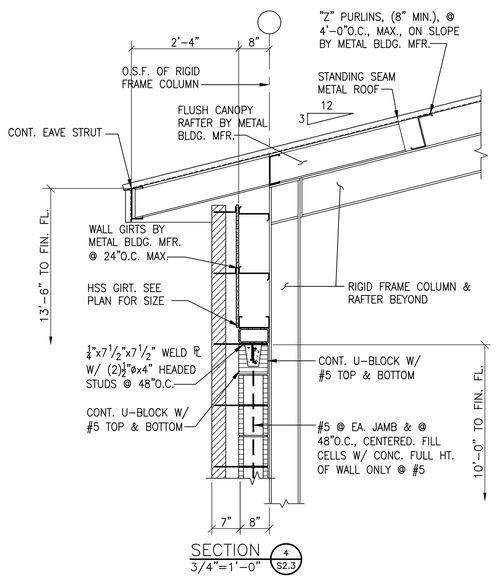

SECTION 3/4"=1'-0" (4 S2.3)

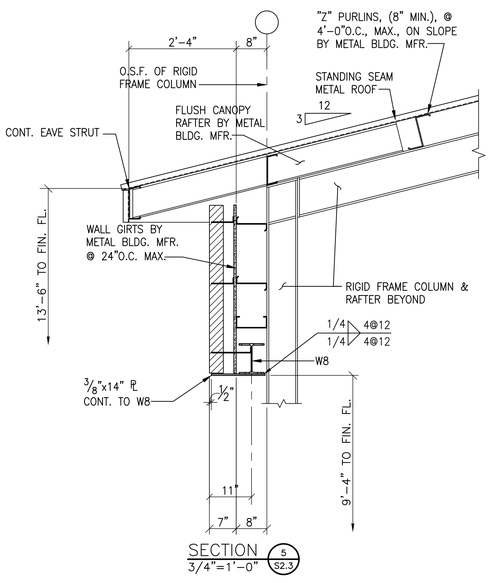

SECTION 3/4"=1'-0" (5 S2.3)

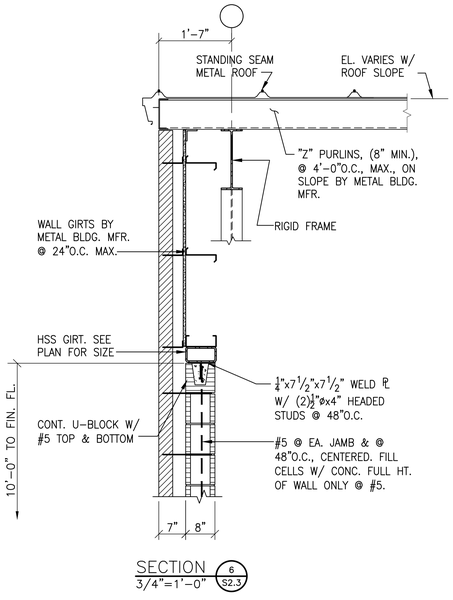

SECTION 3/4"=1'-0" (6 S2.3)

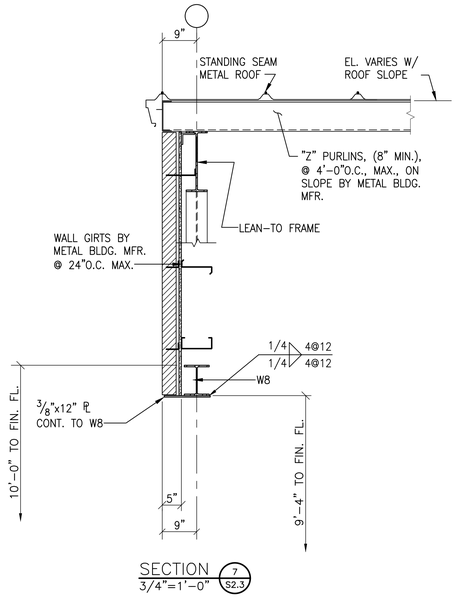

SECTION 3/4"=1'-0" (7 S2.3)

ADDITIONS
TO
ROBERTSDALE HIGH SCHOOL
ROBERTSDALE, ALABAMA
FOR THE
BALDWIN COUNTY BOARD OF EDUCATION

McKEE & ASSOCIATES
ARCHITECTS, INC.
631 SOUTH HULL STREET . MONTGOMERY . ALABAMA 36104 (334) 834-9933

REGISTERED ARCHITECT * RICHARD A. SMITH * NO. 22214 * STATE OF ALABAMA
10/11/23

SHEET TITLE :	SECTIONS AND DETAILS
MCKEE JOB # :	23-195
DRAWN BY :	RAS
DATE:	10.11.2023
REVISED DATE:	
REVISED DATE:	
REVISED DATE:	

SHEET NO. : S2.3

- S:\McKee\Robertsdale HS addn\Robertsdale HS addn - Sections.dwg
- Friday, October 13, 2023 1:25:28 PM

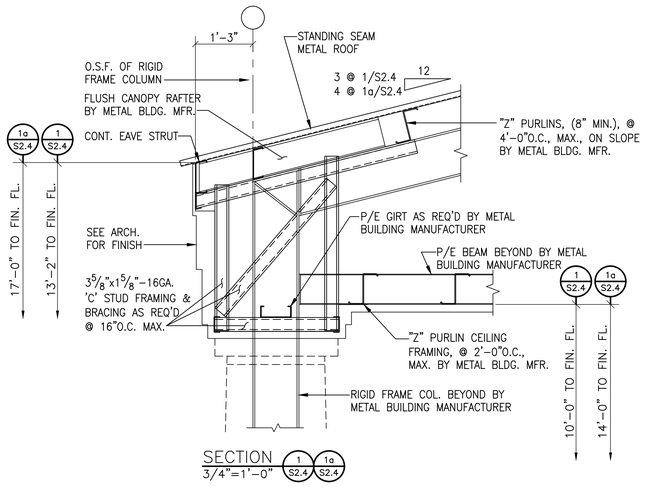

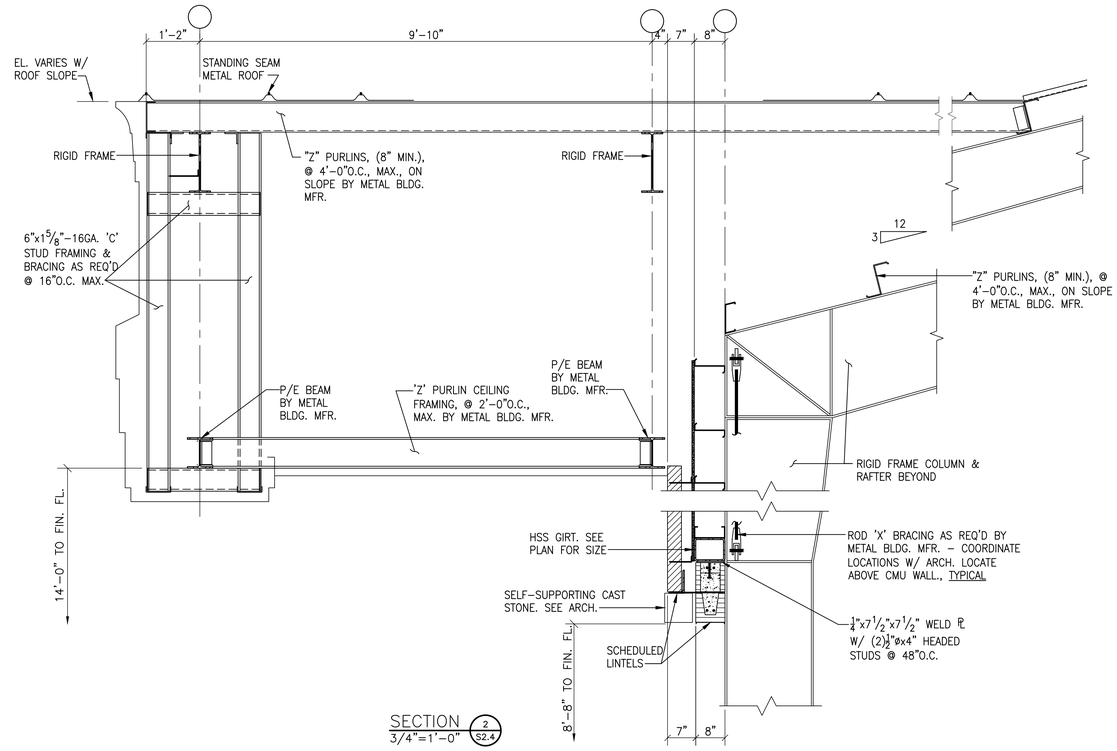

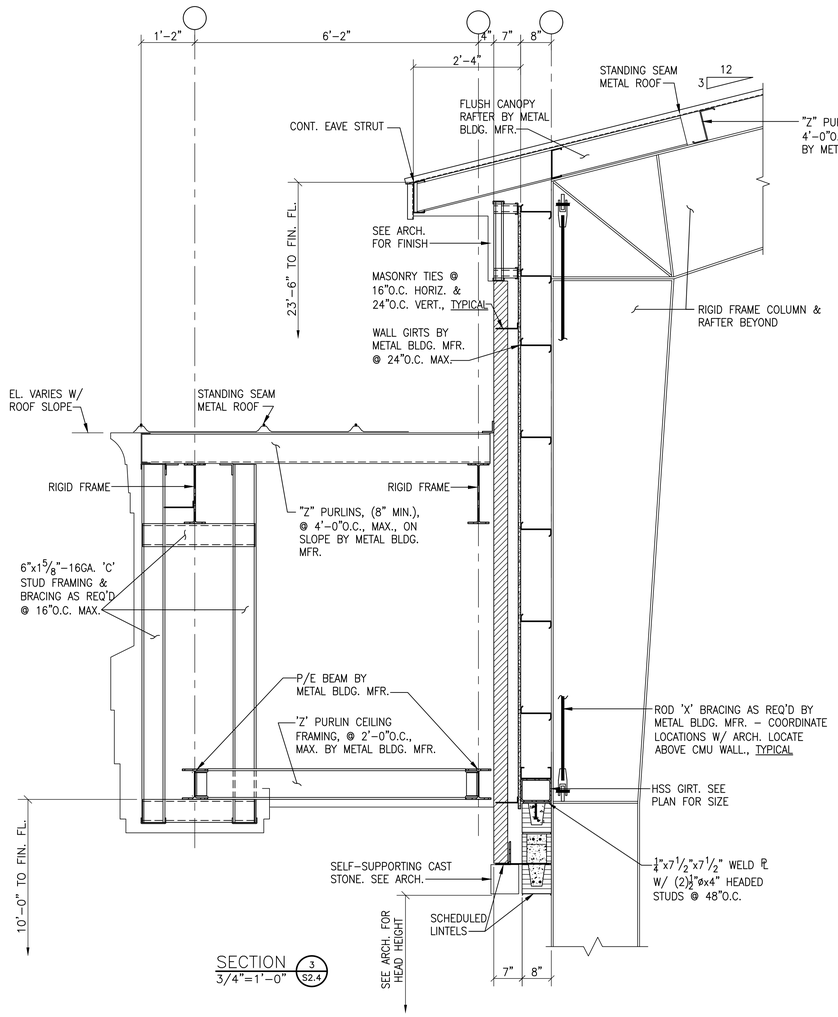

ADDITIONS
TO
ROBERTSDALE HIGH SCHOOL
ROBERTSDALE, ALABAMA
FOR THE
BALDWIN COUNTY BOARD OF EDUCATION

McKEE & ASSOCIATES
ARCHITECTS, INC.
631 SOUTH HULL STREET . MONTGOMERY . ALABAMA 36104 (334) 834-9933

ROBERT A. STRICKLAND
ALABAMA
No. 22214
REGISTERED
PROFESSIONAL
ARCHITECT
10/11/23

SHEET TITLE :	SECTIONS AND DETAILS
MCKEE JOB # :	23-195
DRAWN BY :	RAS
DATE:	10.11.2023
REVISED DATE:	
REVISED DATE:	
REVISED DATE:	

SHEET NO. : S2.4

- S:\MCKEE-Robertsdale HS addn\-Robertsdale HS addn - Sections.dwg
- Friday, October 13, 2023 1:25:28 PM

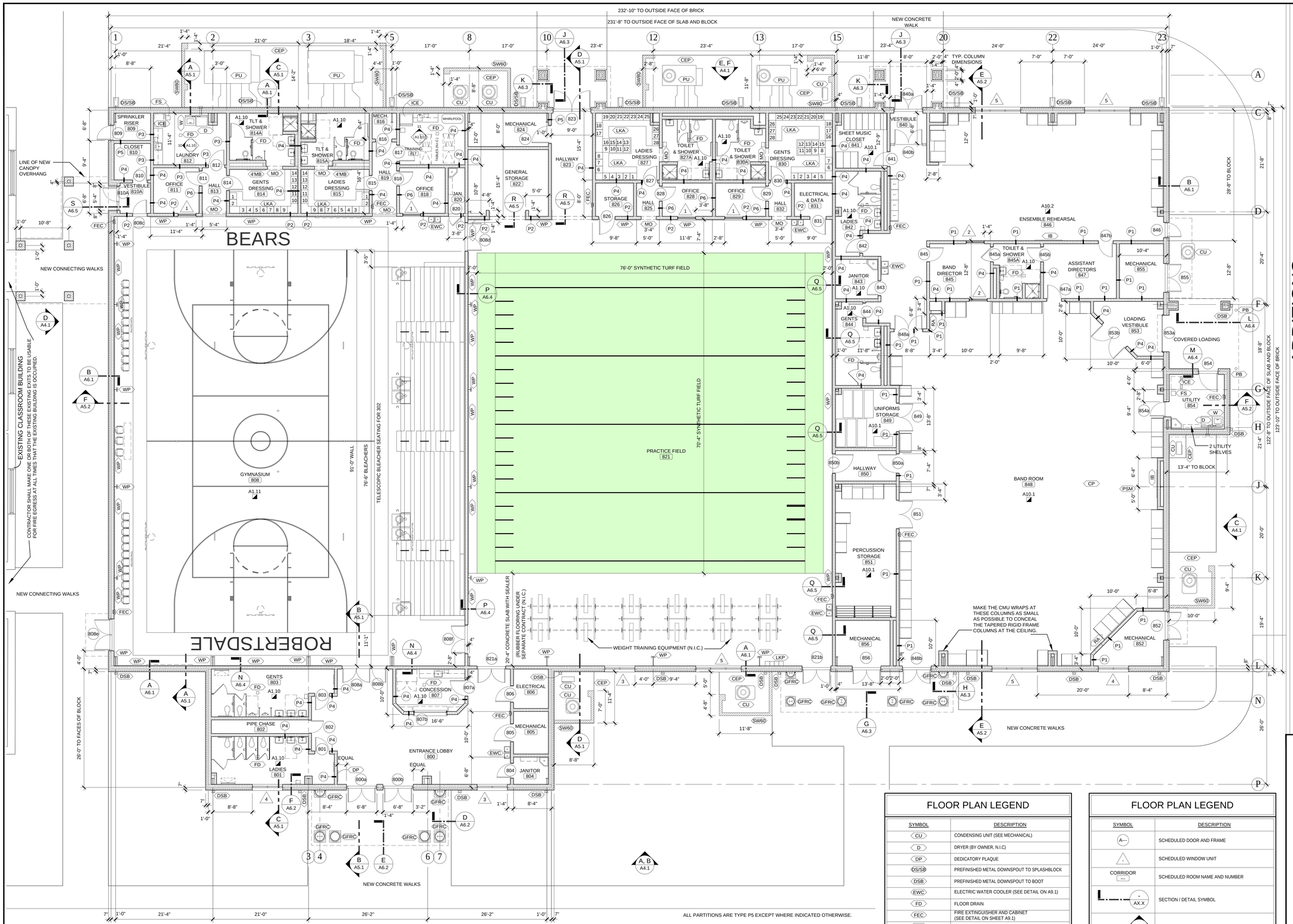

FLOOR PLAN

SCALE: 1/8" = 1'-0"

FLOOR PLAN LEGEND

SYMBOL	DESCRIPTION
RA	RETURN AIR (SEE MECHANICAL)
SW60 · SW80	BRICK SCREEN WALL AND HEIGHT IN INCHES. SEE DETAIL ON SHEET A9.2.
W	WASHER (BY OWNER, N.I.C.)
WP	WALL PADS OR COLUMN PADS
XMB	X'-0" MARKER BOARD (NUMBER INDICATES LENGTH)

FLOOR PLAN LEGEND

SYMBOL	DESCRIPTION
CU	CONDENSING UNIT (SEE MECHANICAL)
D	DRYER (BY OWNER, N.I.C)
DP	DEDICATORY PLAQUE
DS/SB	PREFINISHED METAL DOWNSPOUT TO SPLASHBLOCK
DSB	PREFINISHED METAL DOWNSPOUT TO BOOT
EWC	ELECTRIC WATER COOLER (SEE DETAIL ON A9.1)
FD	FLOOR DRAIN
FEC	FIRE EXTINGUISHER AND CABINET (SEE DETAIL ON SHEET A9.1)
FS	FLOOR SINK
GFRC	GLASS FIBER REINFORCED CONCRETE COLUMN
IB	INTERACTIVE BOARD (BY OWNER)
ICE	ICE MACHINE (BY OWNER, N.I.C.)
LKA	ATHLETIC TEAM LOCKERS, 18" X 18" DEEP X 60" TALL, SINGLE TIER, & CONCRETE BENCH (SEE SHEET A9.1)
LKP	PE LOCKERS, 12" WIDE X 12" DEEP X 72" TALL, 6-TIER WITH INTEGRAL METAL BASE (FLOOR MOUNTED)
MO	MASONRY OPENING 7'-4" TALL
PB	PIPE BOLLARD (SEE DETAIL ON SHEET A9.1)
PSM	CEILING RECESSED PROJECTION SCREEN - MOTORIZED
PU	PACKAGE HVAC UNIT (SEE MECHANICAL)

FLOOR PLAN LEGEND

SYMBOL	DESCRIPTION
A---	SCHEDULED DOOR AND FRAME
-	SCHEDULED WINDOW UNIT
CORRIDOR 100	SCHEDULED ROOM NAME AND NUMBER
AX.X	SECTION / DETAIL SYMBOL
AX.X	BUILDING SECTION SYMBOL
AX.X	INTERIOR ELEVATION SYMBOL
A1.10	AREA OF LARGE-SCALE PLAN AND SHEET WHERE OCCURS
P5	PARTITION TYPES - SEE SHEET A6.5
CEP	CONCRETE EQUIPMENT PAD (SEE DETAIL A9.1)
CP	CEILING MOUNTED PROJECTOR LOCATION

ADDITIONS TO ROBERTSDALE HIGH SCHOOL

ROBERTSDALE, ALABAMA

FOR THE

BALDWIN COUNTY BOARD OF EDUCATION

McKEE & ASSOCIATES
ARCHITECTS, INC.
631 SOUTH HULL STREET , MONTGOMERY , ALABAMA 36104 (334) 834-9933

STATE OF ALABAMA
REGISTERED ARCHITECT
WALTER T. McKEE, JR.
NO. 10822
MONTGOMERY, ALA.

SHEET TITLE : FLOOR PLAN

MCKEE JOB # : 23-195

DRAWN BY : VH

DATE: 10-11-2023

REVISED DATE:

REVISED DATE:

REVISED DATE:

SHEET NO. : A1.1

- Z:\2023\23-195 Additions to Robertsdale High School\CAD Drawings\Architectural\A1.1 Floor Plan.dwg
- Thursday, October 19, 2023 10:35:39 AM

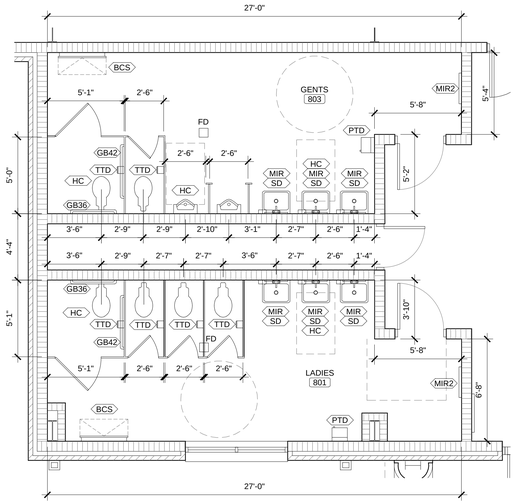

1 ENLARGED PLAN - LOBBY RESTROOMS
SCALE: 1/4" = 1'-0"

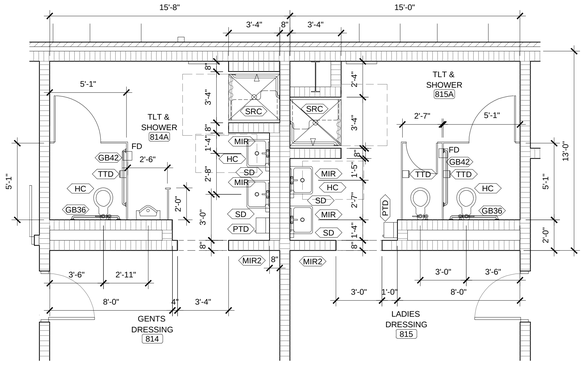

2 ENLARGED PLAN - DRESSING ROOMS
SCALE: 1/4" = 1'-0"

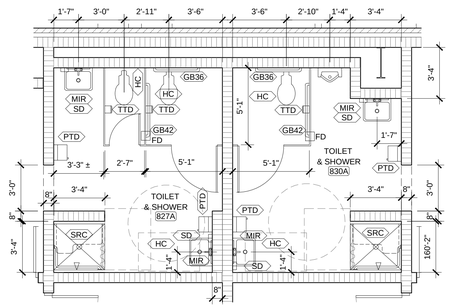

3 ENLARGED PLAN - LOCKER ROOMS
SCALE: 1/4" = 1'-0"

TOILET ACCESSORIES LEGEND	
KEYNOTE	DESCRIPTION
BCS	BABY CHANGING STATION
GB36	36" GRAB BAR MOUNTED WHERE CENTERLINE OF WALL MOUNT IS 6" OUT FROM CORNER OF WALL / TOILET PARTITION AND IS TO BE 33"-36" AFF (SEE SPECS)
GB42	42" GRAB BAR MOUNTED WHERE CENTERLINE OF WALL MOUNT IS 12" OUT FROM CORNER OF WALL / TOILET PARTITION AND IS TO BE 33"-36" AFF (SEE SPECS)
HC	HANDICAPPED ACCESSIBLE WATER CLOSET OR URINAL, MOUNTED WITH SEAT OR LIP AT 17" AFF
MIR	18" X 36" MIRROR WITH SHELF TO BE MOUNTED WITH THE BOTTOM EDGE 35" AFF AND THE TOP EDGE 71" AFF (SEE SPECS)
MIR2	24" X 48" MIRROR WITH THE TOP EDGE AT 76" AFF (SEE SPECS)
PTD	PAPER TOWEL DISPENSER TO BE MOUNTED WITH OUTLET AT 48" AFF (SEE SPECS)
SD	SOAP DISPENSER TO BE MOUNTED WHERE HAND CONTROLS ARE 48" AFF (SEE SPECS)
SRC	40" LONG SHOWER ROD AND CURTAIN TO BE MOUNTED 84" AFF
TTD	TOILET TISSUE DISPENSER TO BE MOUNTED 8" OC IN FRONT OF TOILET AND OUTLET OF DISPENSER MUST BE BETWEEN 15" & 48" AFF (SEE SPECS)
US	UTILITY SHELF WITH MOP RACK

PAPER TOWEL DISPENSERS, TOILET TISSUE DISPENSERS, AND SOAP DISPENSERS SHALL BE FURNISHED BY THE OWNER AND INSTALLED BY THIS CONTRACTOR.

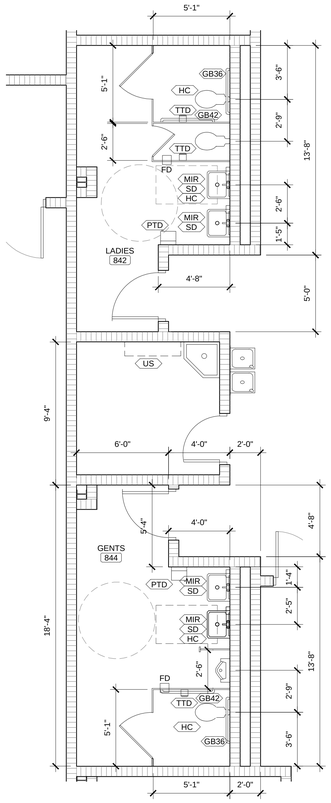

4 ENLARGED PLAN - BAND RESTROOMS
SCALE: 1/4" = 1'-0"

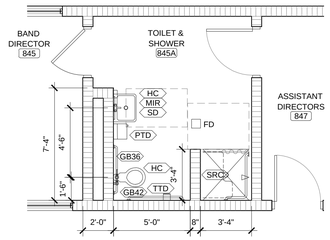

5 ENLARGED PLAN AT BAND OFFICES
SCALE: 1/4" = 1'-0"

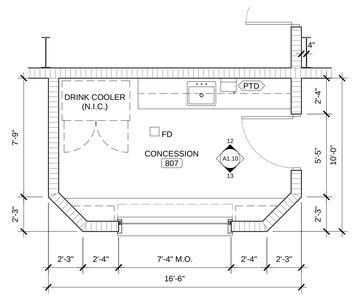

6 ENLARGED PLAN - CONCESSION
SCALE: 1/4" = 1'-0"

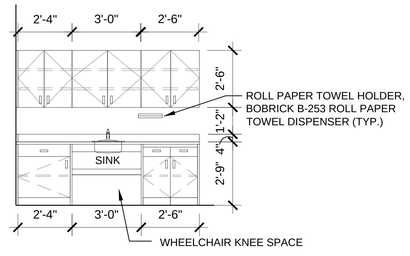

10 812 LAUNDRY CABINET ELEVATION
SCALE: 3/8" = 1'-0"

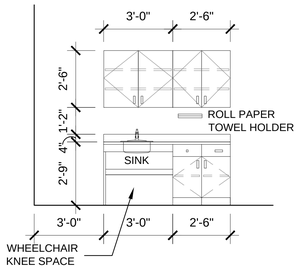

11 817 TRAINING CABINET ELEVATION
SCALE: 3/8" = 1'-0"

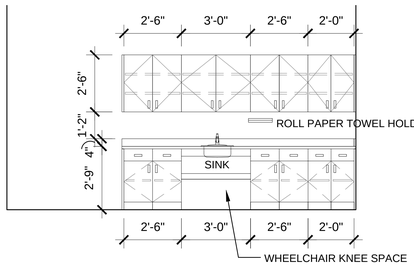

12 807 CONCESSION EAST CABINET ELEVATION
SCALE: 3/8" = 1'-0"

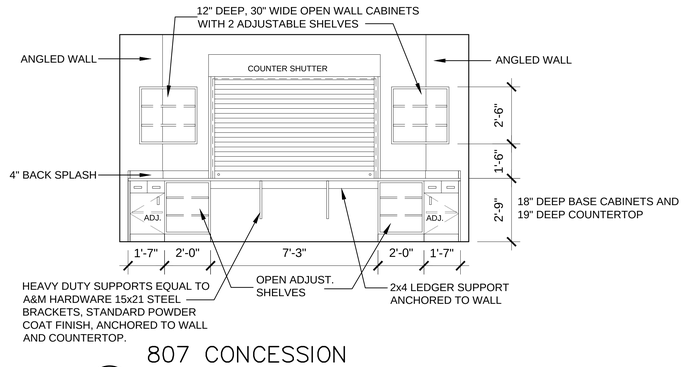

13 807 CONCESSION WEST CABINET ELEVATION
SCALE: 3/8" = 1'-0"

ACCESSIBLE SHOWER NOTES	
1	A FOLDING SEAT SHALL BE PROVIDED IN EACH ACCESSIBLE SHOWER STALL AND SHALL BE MOUNTED 17"-19" FROM THE SHOWER FLOOR AND SHALL EXTEND THE FULL DEPTH OF THE SHOWER STALL (SEE SPECS) SEAT SHALL BE MOUNTED SECURELY AND SHALL NOT SLIP DURING USE.
2	A SHOWER SPRAY UNIT WITH A HOSE AT LEAST 60" LONG THAT CAN BE USED AS A FIXED SHOWER HEAD OR AS A HAND-HELD SHOWER SHALL BE PROVIDED (SEE SPECS)
3	ALL CONTROLS, SHOWER HEADS ETC SHALL BE LOCATED ON OPPOSITE WALL FROM SHOWER SEAT (SEE ELEVATIONS FOR MOUNTING HEIGHTS)

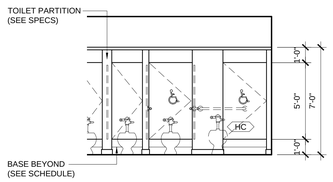

TYPICAL TOILET SCREEN PARTITION ELEVATION
SCALE: 1/4" - 1'-0"

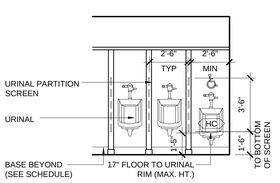

TYPICAL URINAL SCREEN PARTITION ELEVATION
SCALE: 1/4" - 1'-0"

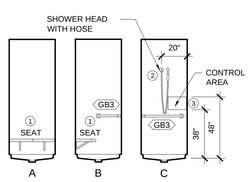

ACCESSIBLE SHOWER ELEVATIONS
SCALE: 1/4" - 1'-0"

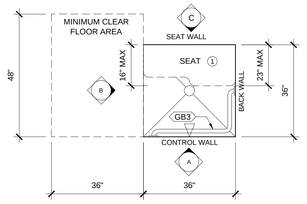

ACCESSIBLE SHOWER PLAN
SCALE: 1/2" - 1'-0"

ADDITIONS TO ROBERTSDALE HIGH SCHOOL
ROBERTSDALE, ALABAMA
FOR THE
BALDWIN COUNTY BOARD OF EDUCATION

McKEE & ASSOCIATES
ARCHITECTS, INC.
631 SOUTH HULL STREET , MONTGOMERY , ALABAMA 36104 (334) 834-9933

STATE OF ALABAMA REGISTERED ARCHITECT
WALTER T. McKEE, JR.
NO. 10822
MONTGOMERY, ALA.

SHEET TITLE : ENLARGED PLANS AND DETAILS, CABINET ELEVATIONS

MCKEE JOB # : 23-195

DRAWN BY : JL, VH

DATE: 10-11-2023

REVISED DATE:

REVISED DATE:

REVISED DATE:

SHEET NO. : A1.10

- Z:\2023\23-195 Additions to Robertsdale High School\CAD Drawings\Architectural\A1.10 Enlarged Plans.dwg
- Thursday, October 19, 2023 10:35:53 AM

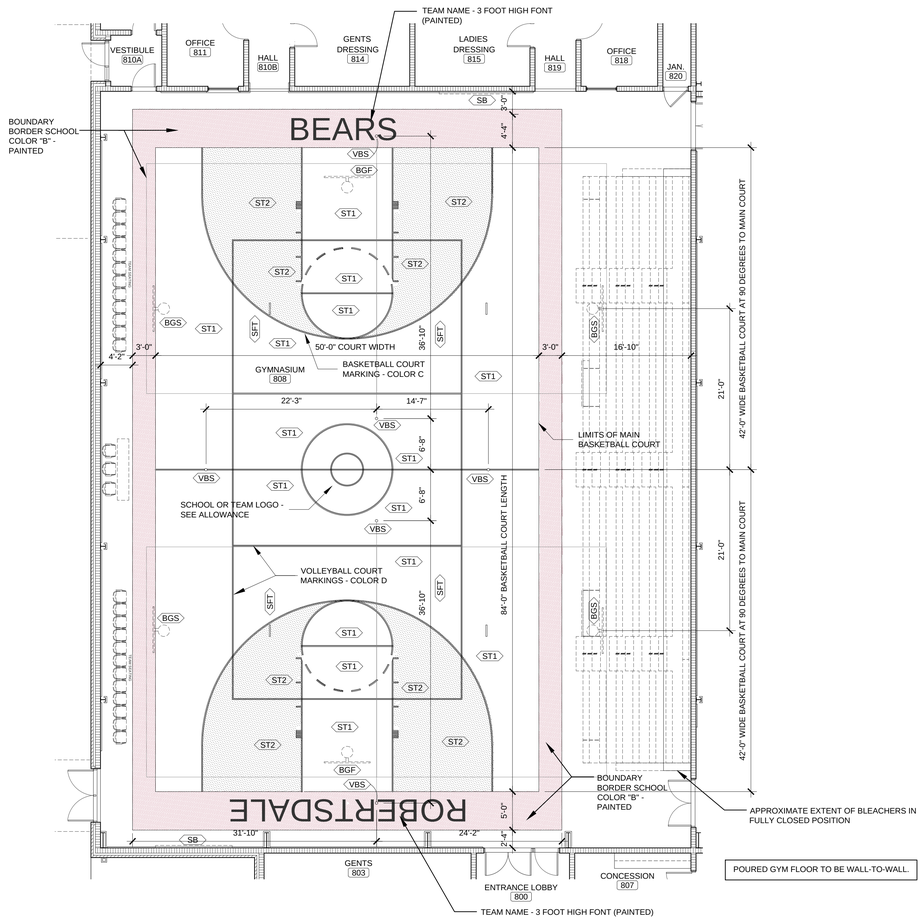

GYMNASIUM FLOOR PLAN
SCALE: 1/8" = 1'-0"

GENERAL NOTES

1. PROVIDE COURT MARKINGS, DIMENSIONS, AND ASSOCIATED EQUIPMENT IN ACCORDANCE WITH THE REGULATIONS OF THE ALABAMA HIGH SCHOOL ATHLETIC ASSOCIATION. CONTRACTOR SHALL PROVIDE A LETTER OR REPORT, WHEREIN THE CONTRACTOR CERTIFIES THAT THE COURT LAYOUT AND MARKINGS MEET THESE REGULATIONS.
2. SOLID COLOR AREAS, STRIPING, AND OTHER MARKINGS SHALL BE IN COLORS THAT WILL BE CHOSEN BY THE OWNER DURING THE SHOP DRAWING OR SUBMITTAL PROCESS.
3. WOOD COURT FLOORING SHALL BE TO THE FACES OF THE WALLS, FULL LIMITS OF THE GYMNASIUM SPACE.
4. STRIPING AND MARKINGS SHALL BE 2" WIDE UNLESS OTHERWISE NOTED.

COURT and EQUIPMENT KEYS

MARK	DESCRIPTION
BGF	BASKETBALL GOAL AND BACKSTOP - FORWARD FOLD
BGS	BASKETBALL GOAL AND BACKSTOP - SIDE FOLD
SB	SCOREBOARD - WALL MOUNTED
SFT	SIDE FREE THROW LINE (VERIFY WITH OWNER)
ST1	MAIN COURT COLOR 1 (NATURAL CLEAR)
ST2	COURT ACCENT COLOR 2
THD	PROVIDE ALUMINUM THRESHOLD (SADDLE) AT DOOR TRANSITION.
VBS	VOLLEYBALL STANDARD FOR NET POLE

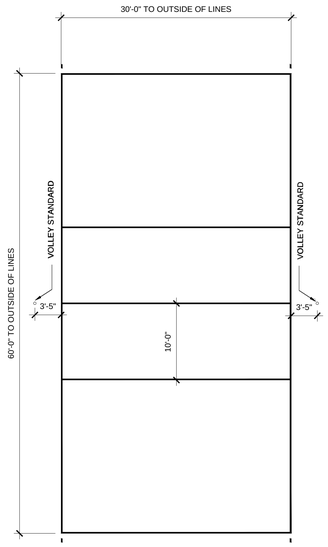

FURNISH 2 SETS OF VOLLEYBALL EQUIPMENT. SEE SPEC SECTION 11200.
FURNISH AND INSTALL 3 SETS OF VOLLEYBALL FLOOR SLEEVES. SEE LAYOUT ON GYMNASIUM PLAN.

A COURT DIAGRAM - VOLLEYBALL
1/8" = 1'-0"

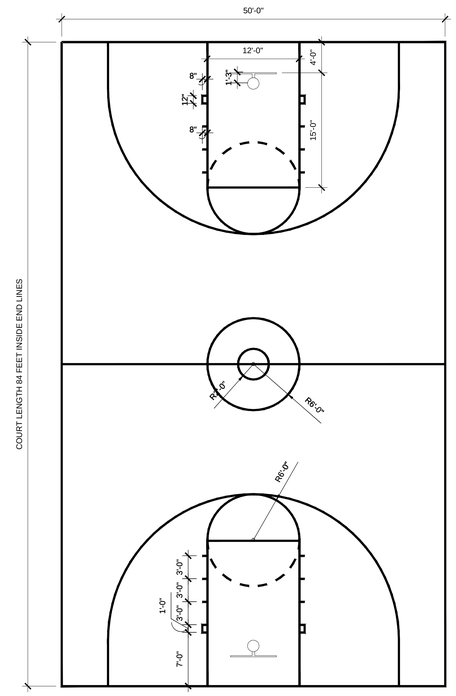

B COURT DIAGRAM - BASKETBALL
1/8" = 1'-0"

ADDITIONS
TO
ROBERTSDALE HIGH SCHOOL
ROBERTSDALE, ALABAMA
FOR THE
BALDWIN COUNTY BOARD OF EDUCATION

McKEE & ASSOCIATES
ARCHITECTS, INC.
631 SOUTH HULL STREET , MONTGOMERY , ALABAMA 36104 (334) 834-9933

STATE OF ALABAMA REGISTERED ARCHITECT WALTER T. McKEE, JR. No. 10052 MONTGOMERY, ALA.

SHEET TITLE : FLOOR PLAN - GYMNASIUM COURT

MCKEE JOB # : 23-195

DRAWN BY : VH

DATE: 10-11-2023

REVISED DATE:

REVISED DATE:

REVISED DATE:

SHEET NO. : A1.11

- Z:\2023\23-195 Additions to Robertsdale High School\CAD Drawings\Architectural\A1.11 Floor Plan - Basketball Court.dwg
- Thursday, October 19, 2023 10:36:08 AM

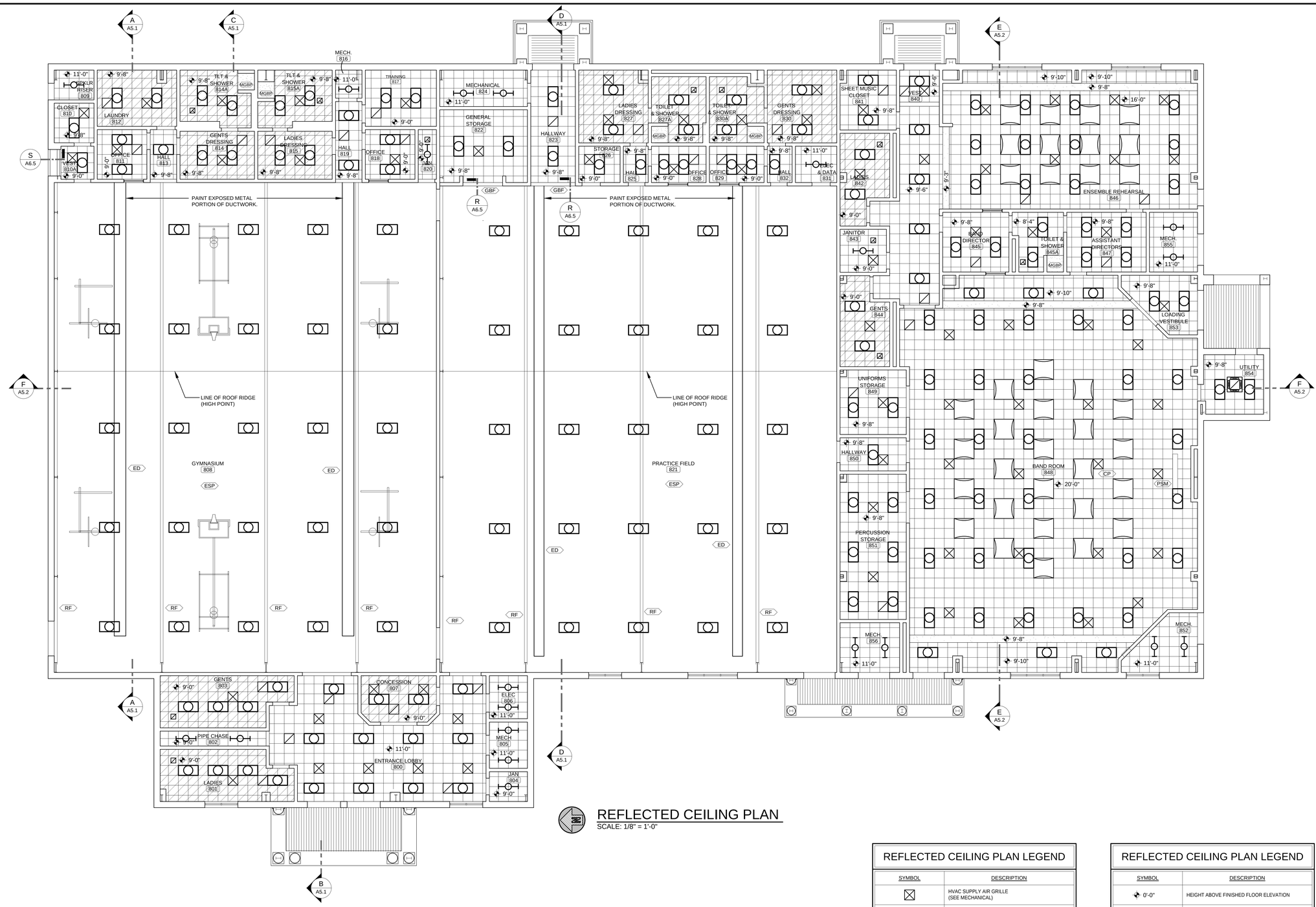

REFLECTED CEILING PLAN
SCALE: 1/8" = 1'-0"

REFLECTED CEILING PLAN LEGEND

SYMBOL	DESCRIPTION
	HVAC SUPPLY AIR GRILLE (SEE MECHANICAL)
	HVAC RETURN AIR GRILLE (SEE MECHANICAL)
	EXHAUST FAN GRILLE (SEE MECHANICAL)
	CASSETTE HEAT PUMP (SEE MECHANICAL)
	ACOUSTICAL SOUND DIFFUSER, 4' X 4'
CP	CEILING MOUNTED PROJECTOR LOCATION
ED	EXPOSED DUCTWORK - NO PAINT
EDP	EXPOSED DUCTWORK - PAINT
ESP	EXPOSED STRUCTURE - PAINT
GBF	GYPSUM BOARD FURRING
GBP	GYPSUM BOARD - PAINT
MGBP	MOISTURE RESISTANT GYPSUM BOARD - PAINT
MSPV	METAL SOFFIT PANELS - VENTED
PSM	CEILING RECESSED PROJECTION SCREEN - MOTORIZED
RF	EXPOSED RIGID FRAME STEEL MEMBER - PAINT
SLP	STEEL LINTEL - PAINT

REFLECTED CEILING PLAN LEGEND

SYMBOL	DESCRIPTION
0'-0"	HEIGHT ABOVE FINISHED FLOOR ELEVATION
	2'x2' LAY-IN ACOUSTICAL CEILING
	2'x2' VINYL CLAD LAY-IN ACOUSTICAL CEILING
	GYPSUM BOARD (SUSPENDED AS REQUIRED)
	LINEAR CEILING
	2'x4' RECESSED OR SURFACE MOUNTED LIGHT FIXTURE (SEE ELECTRICAL)
	2'x2' RECESSED OR SURFACE MOUNTED LIGHT FIXTURE (SEE ELECTRICAL)
	1'x4' RECESSED OR SURFACE MOUNTED LIGHT FIXTURE (SEE ELECTRICAL)
	1'x4' SURFACE MOUNTED LIGHT FIXTURE (SEE ELECTRICAL)
	RECESSED ROUND LIGHT FIXTURE (SEE ELECTRICAL)

ADDITIONS TO ROBERTSDALE HIGH SCHOOL
ROBERTSDALE, ALABAMA
FOR THE
BALDWIN COUNTY BOARD OF EDUCATION

McKEE & ASSOCIATES
ARCHITECTS, INC.
631 SOUTH HULL STREET, MONTGOMERY, ALABAMA 36104 (334) 834-9833

STATE OF ALABAMA REGISTERED ARCHITECT
WALTER T. McKEE, JR.
No. 1882
MONTGOMERY, ALA.

SHEET TITLE : REFLECTED CEILING PLAN

MCKEE JOB # : 23-195

DRAWN BY : VH, JL

DATE: 10-11-2023

REVISED DATE:

REVISED DATE:

REVISED DATE:

SHEET NO. : A2.1

- Z:\2023\23-195 Additions to Robertsdale High School\CAD Drawings\Architectural\A2.1 RCP Plan.dwg
- Friday, October 20, 2023 12:21:37 PM

ROOF PLAN LEGEND

SYMBOL	DESCRIPTION
MRP	METAL ROOF PANELS
X / A3.X	DETAIL SYMBOL
AHC	ALUMINUM HANGER ROD CANOPY
AWC	ALUMINUM WALKWAY COVER
PMF	PREFINISHED METAL FASCIA
PMG	PREFINISHED METAL GUTTER
RF	RIDGE FLASHING - NON VENTED
RFV	RIDGE FLASHING - VENTED
RTW	CONTINUOUS ROOF TO WALL FLASHING
VF	VALLEY FLASHING

EXISTING CLASSROOM BUILDING

4' X 6' AHC

13'-5"

14'-8"

AWC

5' X 17'-6" AHC

4' X 8' AHC

AHC 5' X 9'-4"

ROOF PLAN
SCALE: 1/8" = 1'-0"

ADDITIONS TO ROBERTSDALE HIGH SCHOOL
ROBERTSDALE, ALABAMA
FOR THE
BALDWIN COUNTY BOARD OF EDUCATION

McKEE & ASSOCIATES
ARCHITECTS, INC.
631 SOUTH HULL STREET, MONTGOMERY, ALABAMA 36104 (334) 834-9833

STATE OF ALABAMA REGISTERED ARCHITECT
WALTER T. McKEE, JR.
No. 10802
MONTGOMERY, ALA.

SHEET TITLE :	ROOF PLAN
MCKEE JOB # :	23-195
DRAWN BY :	VH
DATE:	10-11-2023
REVISED DATE:	
REVISED DATE:	
REVISED DATE:	

SHEET NO. : A3.1

- Z:\2023\23-195 Additions to Robertsdale High School\CAD Drawings\Architectural\A3.1 Roof Plan.dwg
- Thursday, October 19, 2023 10:35:53 AM

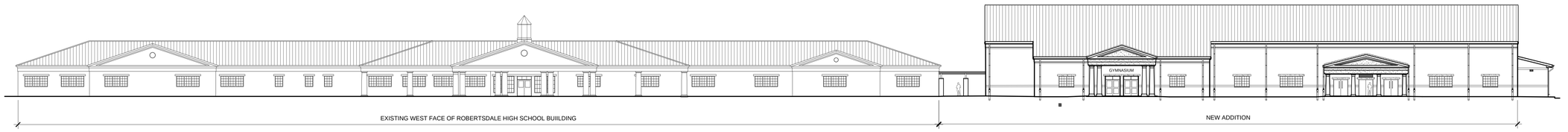

A WEST EXTERIOR ELEVATION - OVERALL VIEW
SCALE: 1" = 20'

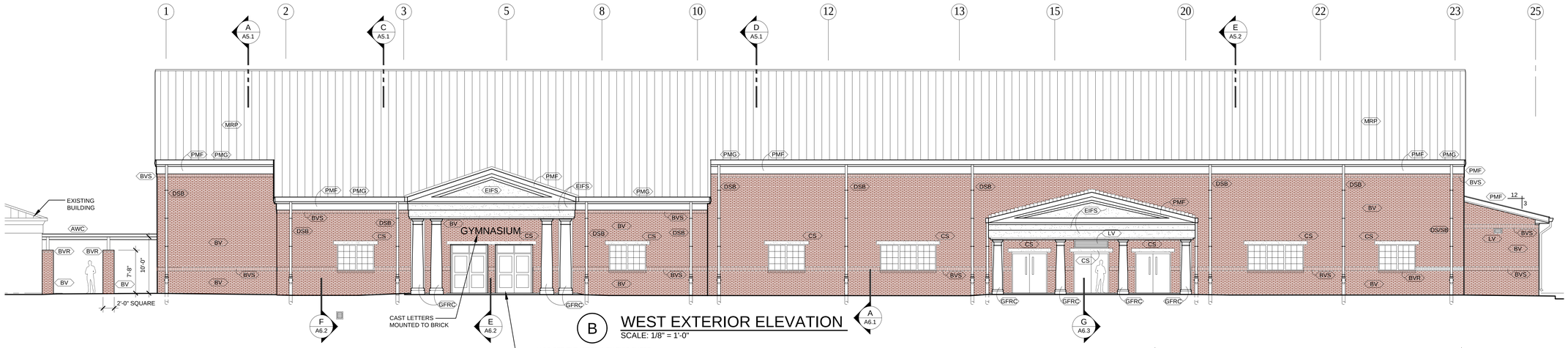

B WEST EXTERIOR ELEVATION
SCALE: 1/8" = 1'-0"

ALSO SEE ELEVATION 1 ON THIS SHEET.

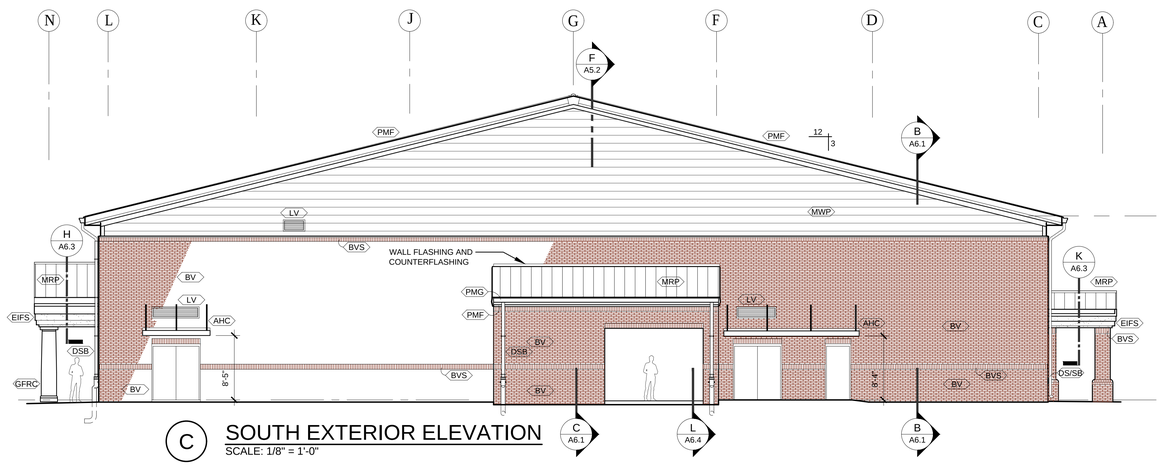

C SOUTH EXTERIOR ELEVATION
SCALE: 1/8" = 1'-0"

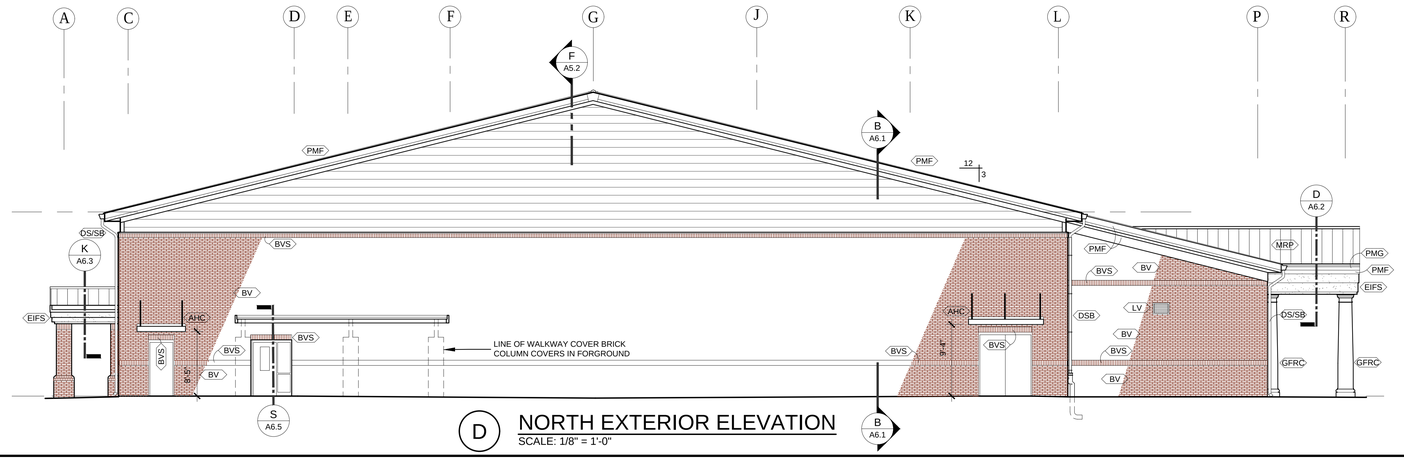

D NORTH EXTERIOR ELEVATION
SCALE: 1/8" = 1'-0"

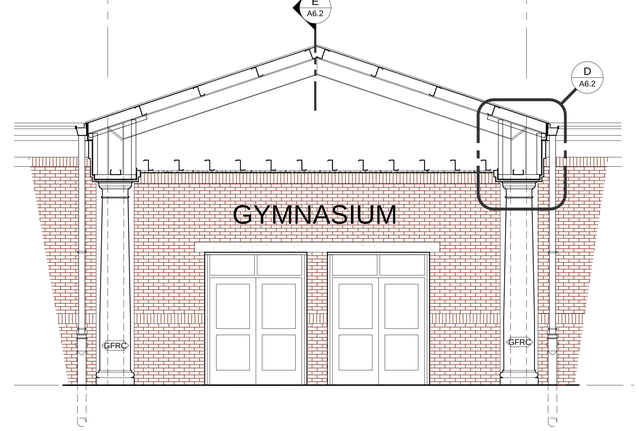

1 CANOPY SECTION AND ENTRANCE ELEVATION
SCALE: 1/4" = 1'-0"

EXTERIOR ELEVATION LEGEND

SYMBOL	DESCRIPTION
- AX.X	BUILDING SECTION SYMBOL
AHC	ALUMINUM HANGER ROD CANOPY - SEE ROOF PLAN FOR SIZES.
AWC	ALUMINUM WALKWAY COVER AND COLUMNS
BV	BRICK VENEER
BVR	BRICK VENEER - ROWLOCK COURSE
BVS	BRICK VENEER - SOLDIER COURSE
CS	CAST STONE TRIM
DSB	PREFINISHED METAL DOWNSPOUT TO BOOT
OS/SB	PREFINISHED METAL DOWNSPOUT TO SPLASHBLOCK
EIFS	EXTERIOR INSULATION AND FINISH SYSTEM
GFRC	GLASS FIBER REINFORCED COLUMN
LV	LOUVER (SEE MECHANICAL)
MRP	METAL ROOF PANELS
MWP	METAL WALL PANELS - HORIZONTAL LAPPED
PB	PIPE BOLLARD (SEE DETAIL ON SHEET A9.1)
PMF	PREFINISHED METAL FASCIA
PMG	PREFINISHED METAL GUTTER

KEY PLAN

ADDITIONS TO ROBERTSDALE HIGH SCHOOL
ROBERTSDALE, ALABAMA
FOR THE
BALDWIN COUNTY BOARD OF EDUCATION

McKEE & ASSOCIATES
ARCHITECTS, INC.
631 SOUTH HULL STREET, MONTGOMERY, ALABAMA 36104 (334) 834-9933

STATE OF ALABAMA
REGISTERED ARCHITECT
WALTER T. McKEE, JR.
NO. 10822
MONTGOMERY, ALA.

SHEET TITLE : EXTERIOR ELEVATIONS

MCKEE JOB # : 23-195

DRAWN BY : VH

DATE: 10-11-2023

REVISED DATE:

REVISED DATE:

REVISED DATE:

SHEET NO. : A4.1

- Z:\2023\23-195 Additions to Robertsdale High School\CAD Drawings\Architectural\A4.1 Exterior Elevations.dwg
- Thursday, October 19, 2023 10:37:17 AM

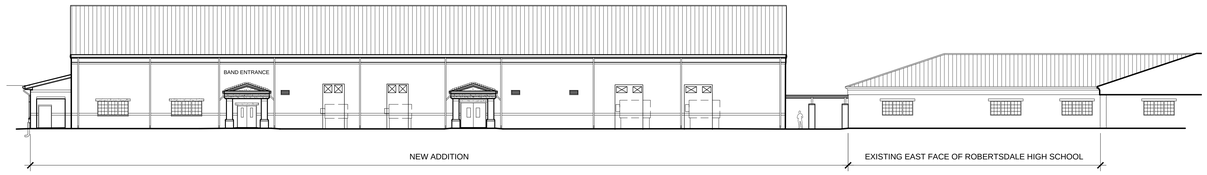

E EAST EXTERIOR ELEVATION - OVERALL VIEW
SCALE: 1" = 20'

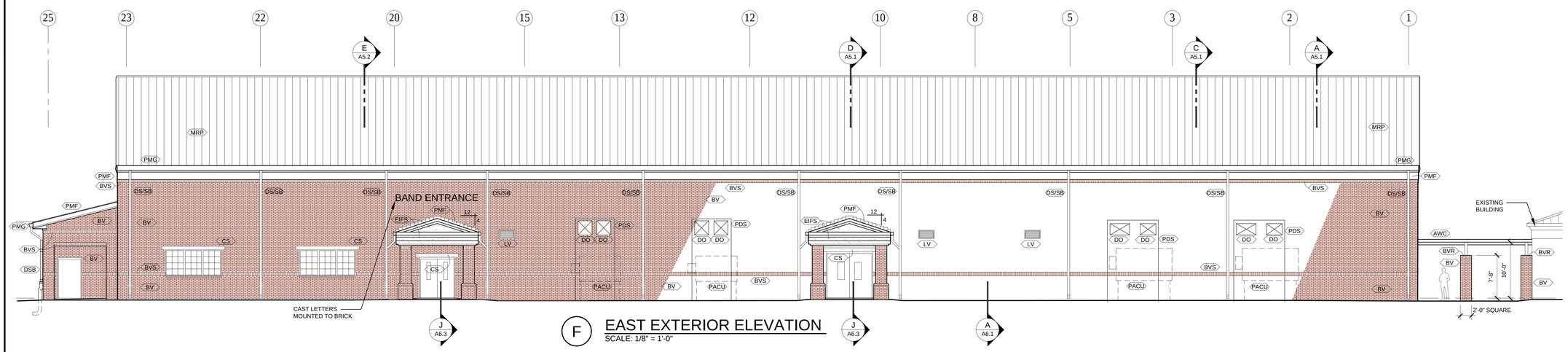

F EAST EXTERIOR ELEVATION
SCALE: 1/8" = 1'-0"

EXTERIOR ELEVATION LEGEND

SYMBOL	DESCRIPTION
- / AX.X	BUILDING SECTION SYMBOL
AHC	ALUMINUM HANGER ROD CANOPY - SEE ROOF PLAN FOR SIZES.
AWC	ALUMINUM WALKWAY COVER AND COLUMNS
BV	BRICK VENEER
BVR	BRICK VENEER - ROWLOCK COURSE
BVS	BRICK VENEER - SOLDIER COURSE
CS	CAST STONE TRIM
DO	DUCT OPENING IN WALL - SEE MECHANICAL
DSB	PREFINISHED METAL DOWNSPOUT TO BOOT
DS/SB	PREFINISHED METAL DOWNSPOUT TO SPLASHBLOCK
EIFS	EXTERIOR INSULATION AND FINISH SYSTEM
GFRC	GLASS FIBER REINFORCED COLUMN
LV	LOUVER (SEE MECHANICAL)
MRP	METAL ROOF PANELS
MWP	METAL WALL PANELS - HORIZONTAL LAPPED
PACU	PACKAGE HVAC UNIT
PDS	PREFINISHED DUCT SHROUD - SEE SHEET A9.2
PB	PIPE BOLLARD (SEE DETAIL ON SHEET A9.1)
PMF	PREFINISHED METAL FASCIA
PMG	PREFINISHED METAL GUTTER

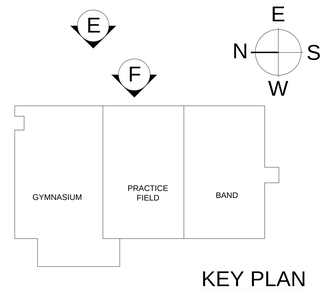

KEY PLAN

ADDITIONS TO ROBERTSDALE HIGH SCHOOL
ROBERTSDALE, ALABAMA
FOR THE
BALDWIN COUNTY BOARD OF EDUCATION

McKEE & ASSOCIATES
ARCHITECTS, INC.
631 SOUTH HULL STREET, MONTGOMERY, ALABAMA 36104 (334) 834-9933

STATE OF ALABAMA REGISTERED ARCHITECT
WALTER T. McKEE, JR.
NO. 10602
MONTGOMERY, ALA.

SHEET TITLE : EXTERIOR ELEVATIONS

MCKEE JOB # : 23-195

DRAWN BY : VH

DATE: 10-11-2023

REVISED DATE:

REVISED DATE:

REVISED DATE:

SHEET NO. : A4.2

- Z:\2023\23-195 Additions to Robertsdale High School\CAD Drawings\Architectural\A4.1 Exterior Elevations.dwg
- Thursday, October 19, 2023 10:37:11 AM

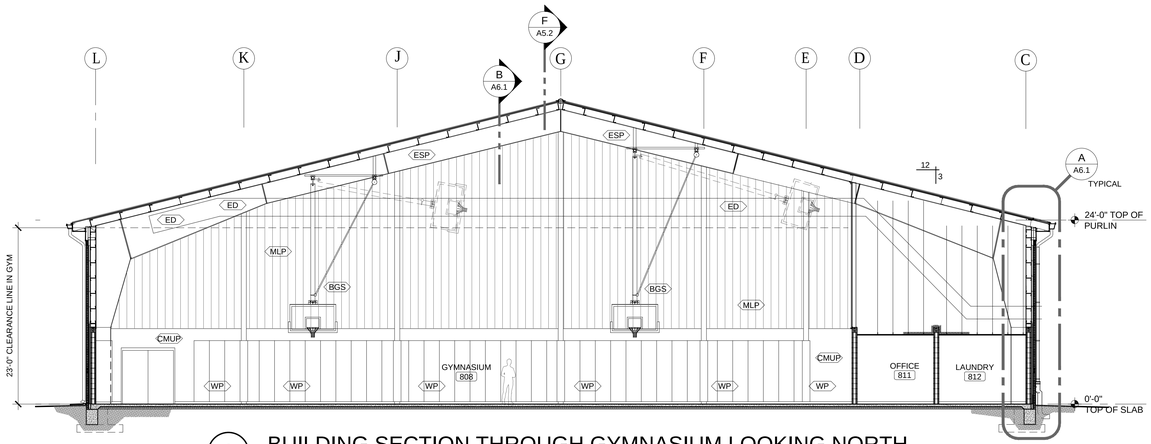

A BUILDING SECTION THROUGH GYMNASIUM LOOKING NORTH
SCALE: 1/8" = 1'-0"

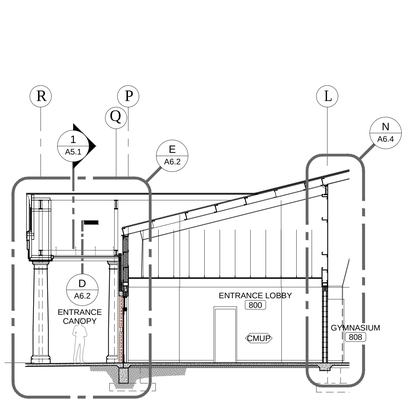

B LOBBY SECTION AT CANOPY
SCALE: 1/8" = 1'-0"

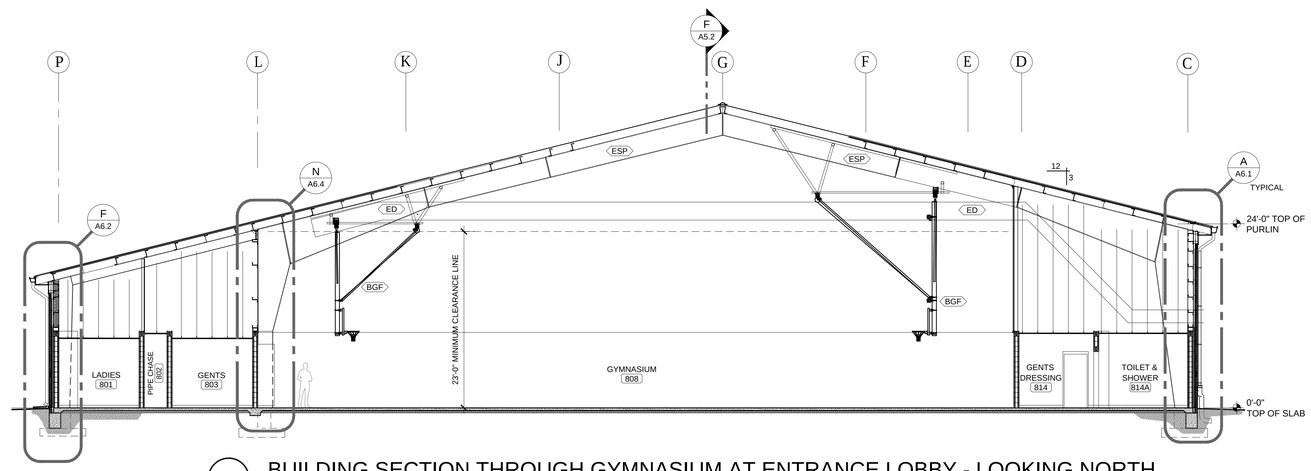

C BUILDING SECTION THROUGH GYMNASIUM AT ENTRANCE LOBBY - LOOKING NORTH
SCALE: 1/8" = 1'-0"

"MINIMUM CLEARANCE LINE" IS THE MINIMUM HEIGHT REQUIRED FOR BASKETBALL BACKSTOPS IN THEIR RETRACTED POSITIONS, LIGHT FIXTURES, DUCTS, AND OTHER ITEMS THAT ARE HUNG FROM THE UPPER STRUCTURE. THIS APPLIES TO THE AREA ABOVE THE BASKETBALL COURT, THE TWO TRANSVERSE VOLLEYBALL COURTS, AND THE AREA ABOVE THE PRACTICE FIELD TURF.

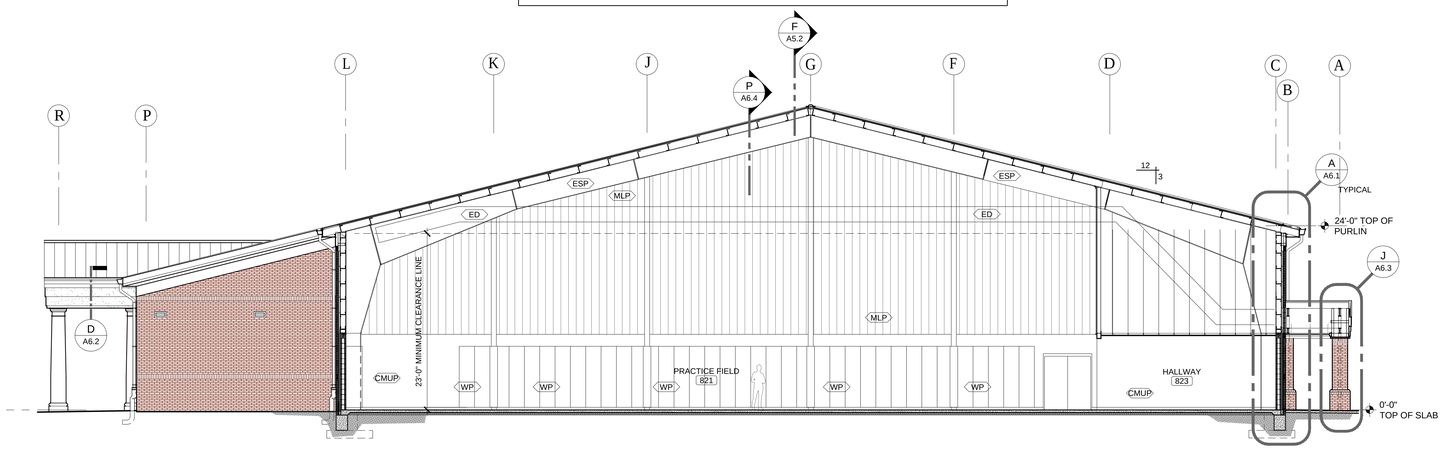

D BUILDING SECTION THROUGH PRACTICE FIELD - LOOKING NORTH
SCALE: 1/8" = 1'-0"

BUILDING SECTION LEGEND

SYMBOL	DESCRIPTION
AP	ACOUSTICAL WALL PANELS
BGF	BASKETBALL GOAL BACKSTOP - FORWARD FOLD
BGS	BASKETBALL GOAL BACKSTOP - SIDE FOLD
CMUP	CONCRETE MASONRY UNIT - PAINT
ED	EXPOSED DUCTWORK - NO PAINT (FABRIC DUCT)
ESP	EXPOSED STRUCTURE - PAINT
GBP	GYPSUM BOARD - PAINT
MO	MASONRY OPENING
MLP	METAL LINER PANELS
TGS	TELESCOPIC GYMNASIUM SEATING
WP	WALL PADS

ADDITIONS
TO
ROBERTSDALE HIGH SCHOOL
ROBERTSDALE, ALABAMA
FOR THE
BALDWIN COUNTY BOARD OF EDUCATION

McKEE & ASSOCIATES
ARCHITECTS, INC.
631 SOUTH HULL STREET, MONTGOMERY, ALABAMA 36104 (334) 834-9833

STATE OF ALABAMA REGISTERED ARCHITECT
WALTER T. MAGEE, JR.
NO. 3802
MONTGOMERY, ALA.

SHEET TITLE : BUILDING SECTIONS

MCKEE JOB # : 23-195

DRAWN BY : VH

DATE: 10-11-2023

REVISED DATE:

REVISED DATE:

REVISED DATE:

SHEET NO. : A5.1

- Z:\2023\23-195 Additions to Robertsdale High School\CAD Drawings\Architectural\A5.1 Building Sections.dwg
- Thursday, October 19, 2023 10:36:04 AM

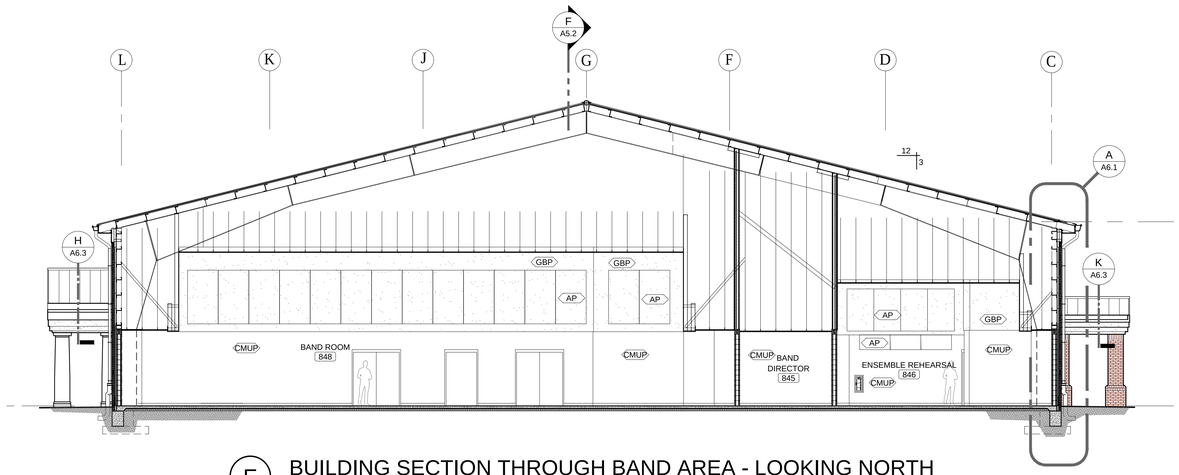

E BUILDING SECTION THROUGH BAND AREA - LOOKING NORTH

SCALE: 1/8" = 1'-0"

1. "MINIMUM CLEARANCE LINE" IS THE MINIMUM HEIGHT REQUIRED FOR BASKETBALL BACKSTOPS IN THEIR RETRACTED POSITIONS, LIGHT FIXTURES, DUCTS, AND OTHER ITEMS THAT ARE HUNG FROM THE UPPER STRUCTURE. THIS APPLIES TO THE AREA ABOVE THE BASKETBALL COURT, THE TWO TRANSVERSE VOLLEYBALL COURTS, AND THE AREA ABOVE THE PRACTICE FIELD TURF.
2. SEE SHEETS A10.1 AND A10.2 FOR LAYOUTS OF BAND ROOM MUSIC CASEWORK AND ACOUSTICAL WALL PANELS.

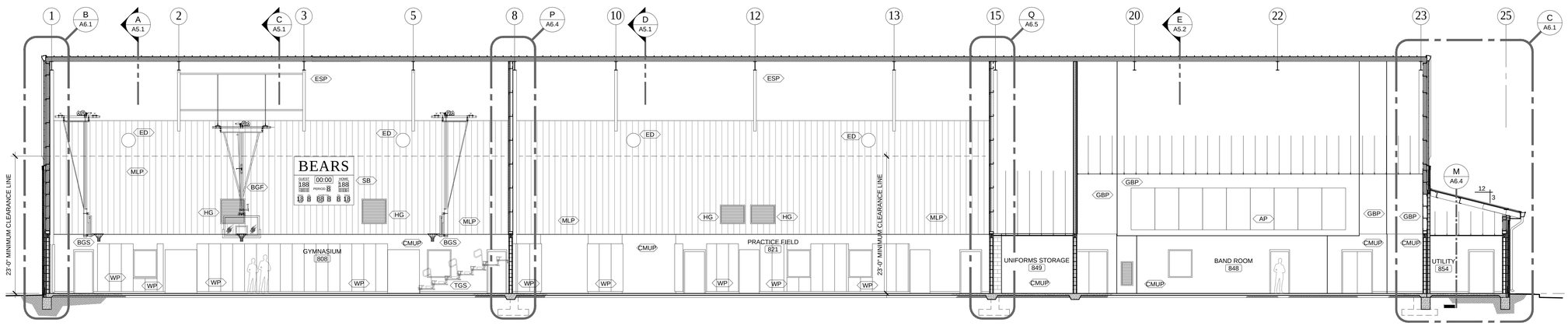

F BUILDING SECTION NEAR BUILDING MIDPOINT, LOOKING EAST

SCALE: 1/8" = 1'-0"

BUILDING SECTION LEGEND

SYMBOL	DESCRIPTION
AP	ACOUSTICAL WALL PANELS
BGF	BASKETBALL GOAL BACKSTOP - FORWARD FOLD
BGS	BASKETBALL GOAL BACKSTOP - SIDE FOLD
CMUP	CONCRETE MASONRY UNIT - PAINT
ED	EXPOSED DUCTWORK - NO PAINT (FABRIC DUCT)
ESP	EXPOSED STRUCTURE - PAINT
GBP	GYPSUM BOARD - PAINT
HG	HVAC GRILLE - SEE MECHANICAL
MO	MASONRY OPENING
MLP	METAL LINER PANELS
SB	SCOREBOARD (1 OF 2 IN THE GYMNASIUM)
TGS	TELESCOPIC GYMNASIUM SEATING
WP	WALL PADS

ADDITIONS
TO
ROBERTSDALE HIGH SCHOOL
ROBERTSDALE, ALABAMA
FOR THE
BALDWIN COUNTY BOARD OF EDUCATION

McKEE & ASSOCIATES
ARCHITECTS, INC.
631 SOUTH HULL STREET , MONTGOMERY , ALABAMA 36104 (334) 834-9933

STATE OF ALABAMA REGISTERED ARCHITECT
WALTER T. McKEE, JR.
No. 1092
MONTGOMERY, ALA.

SHEET TITLE : BUILDING SECTIONS

MCKEE JOB # : 23-195

DRAWN BY : VH

DATE: 10-11-2023

REVISED DATE:

REVISED DATE:

REVISED DATE:

SHEET NO. : A5.2

- Z:\2023\23-195 Additions to Robertsdale High School\CAD Drawings\Architectural\A5.1 Building Sections.dwg
- Thursday, October 19, 2023 10:36:02 AM

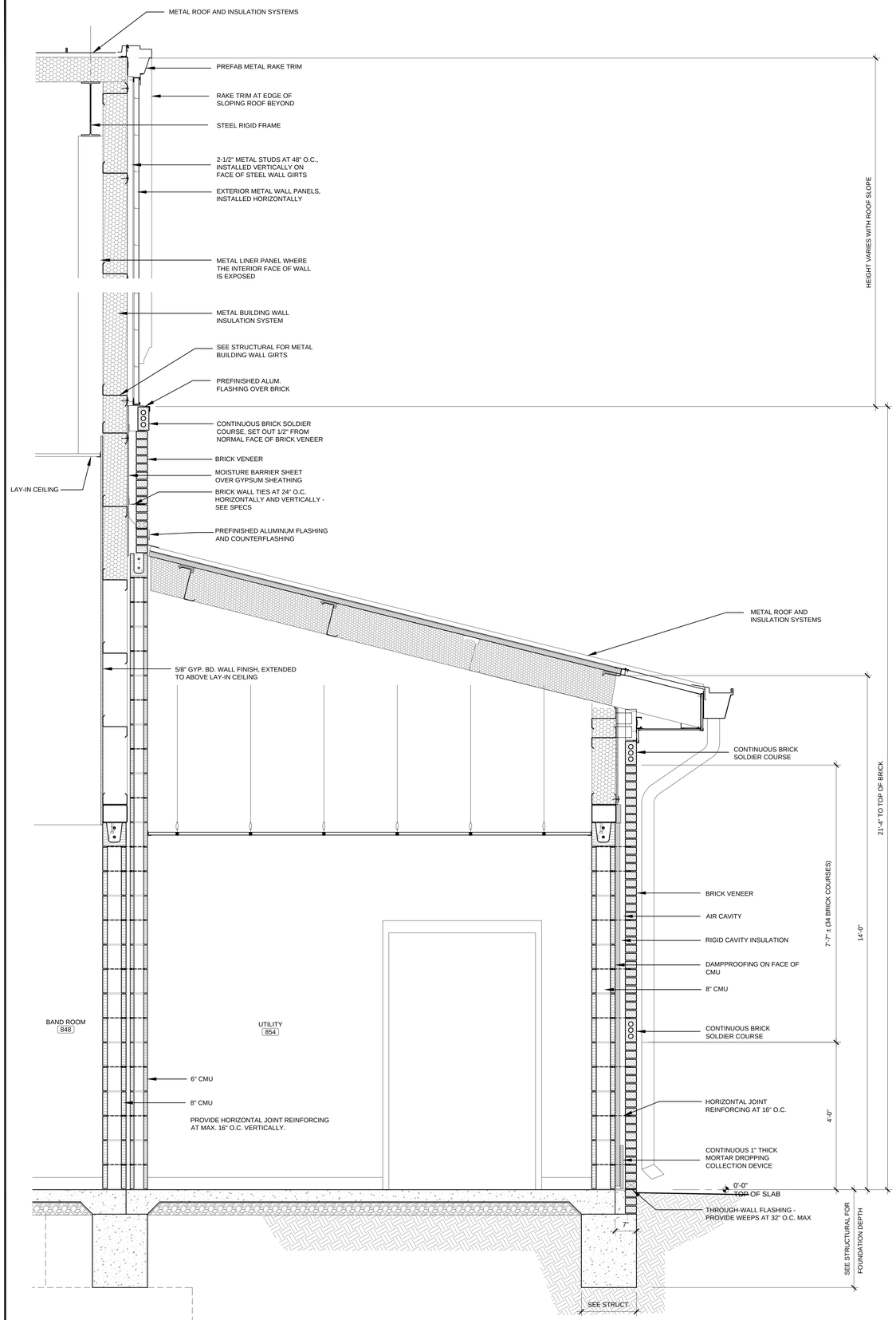

C WALL SECTION
SCALE: 3/4"=1'-0"

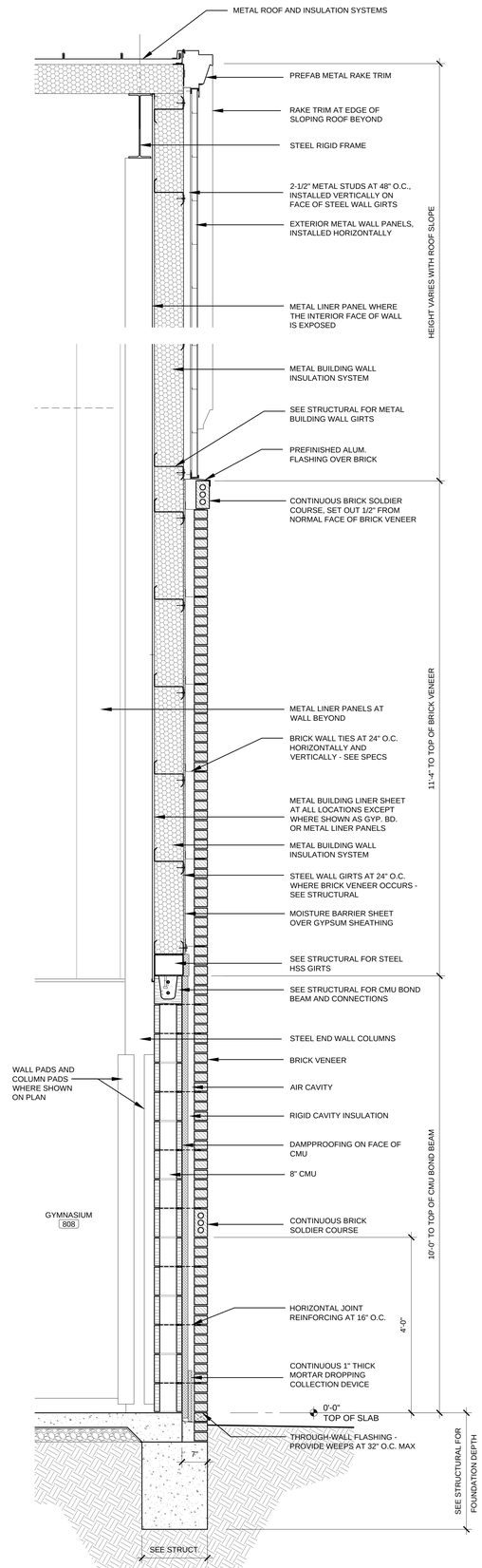

B WALL SECTION AT END WALL
SCALE: 3/4"=1'-0"

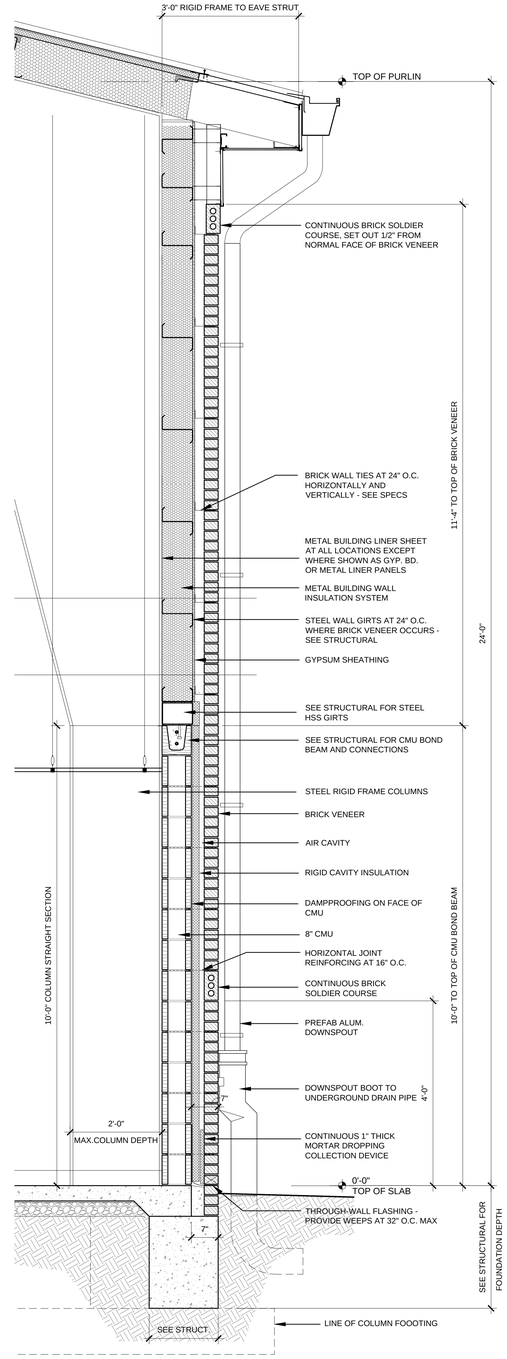

A WALL SECTION - TYPICAL EXTERIOR WALL
SCALE: 3/4"=1'-0"

ADDITIONS TO ROBERTSDALE HIGH SCHOOL

ROBERTSDALE, ALABAMA

FOR THE

BALDWIN COUNTY BOARD OF EDUCATION

McKEE & ASSOCIATES
ARCHITECTS, INC.
631 SOUTH HULL STREET, MONTGOMERY, ALABAMA 36104 (334) 834-9933

STATE OF ALABAMA REGISTERED ARCHITECT WALTER T. McKEE, JR. NO. 10822 MONTGOMERY, ALA.

SHEET TITLE : WALL SECTIONS

MCKEE JOB # : 23-195

DRAWN BY : VH

DATE: 10-11-2023

REVISED DATE:

REVISED DATE:

REVISED DATE:

SHEET NO. : A6.1

- Z:\2023\23-195 Additions to Robertsdale High School\CAD Drawings\Architectural\A6.1 Wall Sections.dwg
- Thursday, October 19, 2023 10:36:33 AM

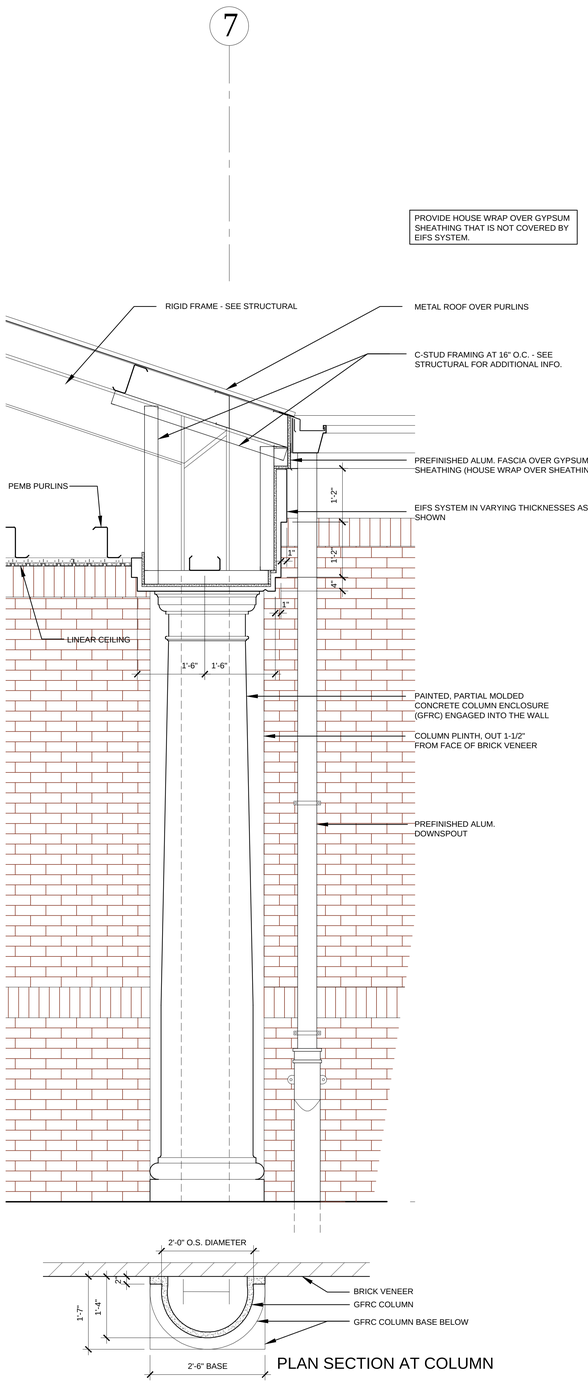

PROVIDE HOUSE WRAP OVER GYPSUM SHEATHING THAT IS NOT COVERED BY EIFS SYSTEM.

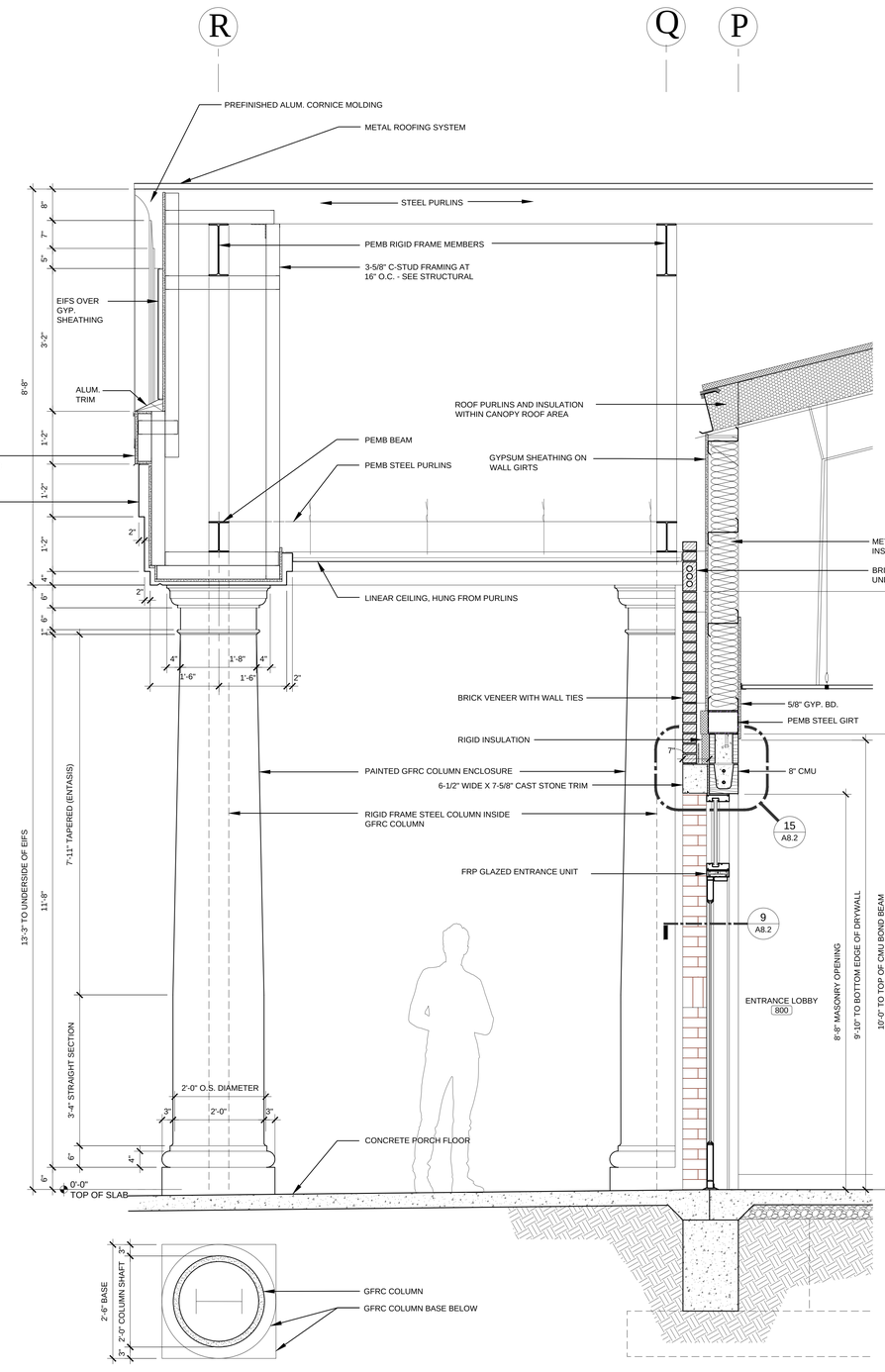

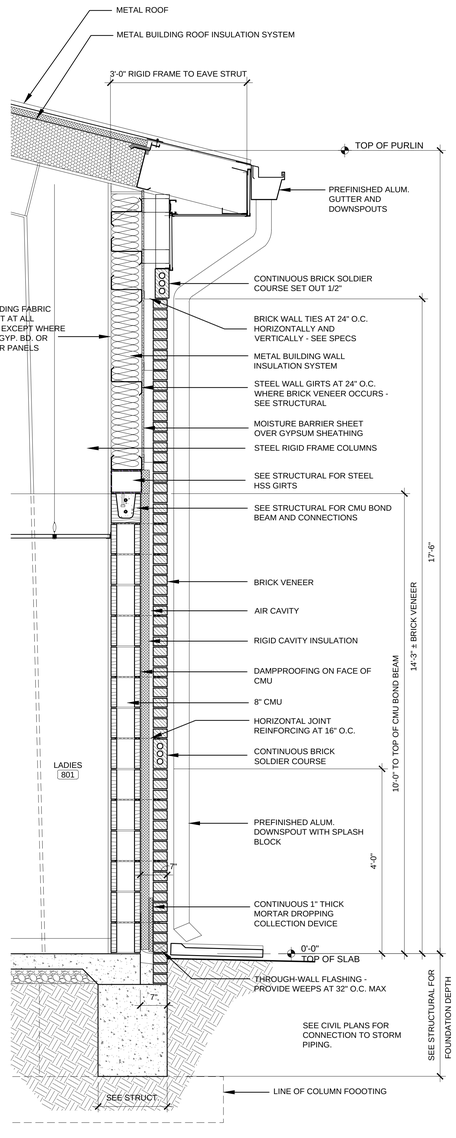

PLAN SECTION AT COLUMN

PLAN SECTION AT COLUMN

D SECTION AT SIDE OF GYM LOBBY ENTRANCE CANOPY

SCALE: 3/4"=1'-0"

E SECTION AT GYM LOBBY ENTRANCE CANOPY

SCALE: 3/4"=1'-0"

F WALL SECTION - LOWER WEST WALL

SCALE: 3/4"=1'-0"

ADDITIONS TO ROBERTSDALE HIGH SCHOOL

ROBERTSDALE, ALABAMA

FOR THE

BALDWIN COUNTY BOARD OF EDUCATION

McKEE & ASSOCIATES
ARCHITECTS, INC.
631 SOUTH HULL STREET, MONTGOMERY, ALABAMA 36104 (334) 834-9933

STATE OF ALABAMA REGISTERED ARCHITECT
WALTER T. McKEE, JR.
NO. 10602
MONTGOMERY, ALA.

SHEET TITLE : WALL SECTIONS

MCKEE JOB # : 23-195

DRAWN BY : VH

DATE: 10-11-2023

REVISED DATE:

REVISED DATE:

REVISED DATE:

SHEET NO. : A6.2

- Z:\2023\23-195 Additions to Robertsdale High School\CAD Drawings\Architectural\A6.1 Wall Sections.dwg
- Thursday, October 19, 2023 10:36:31 AM

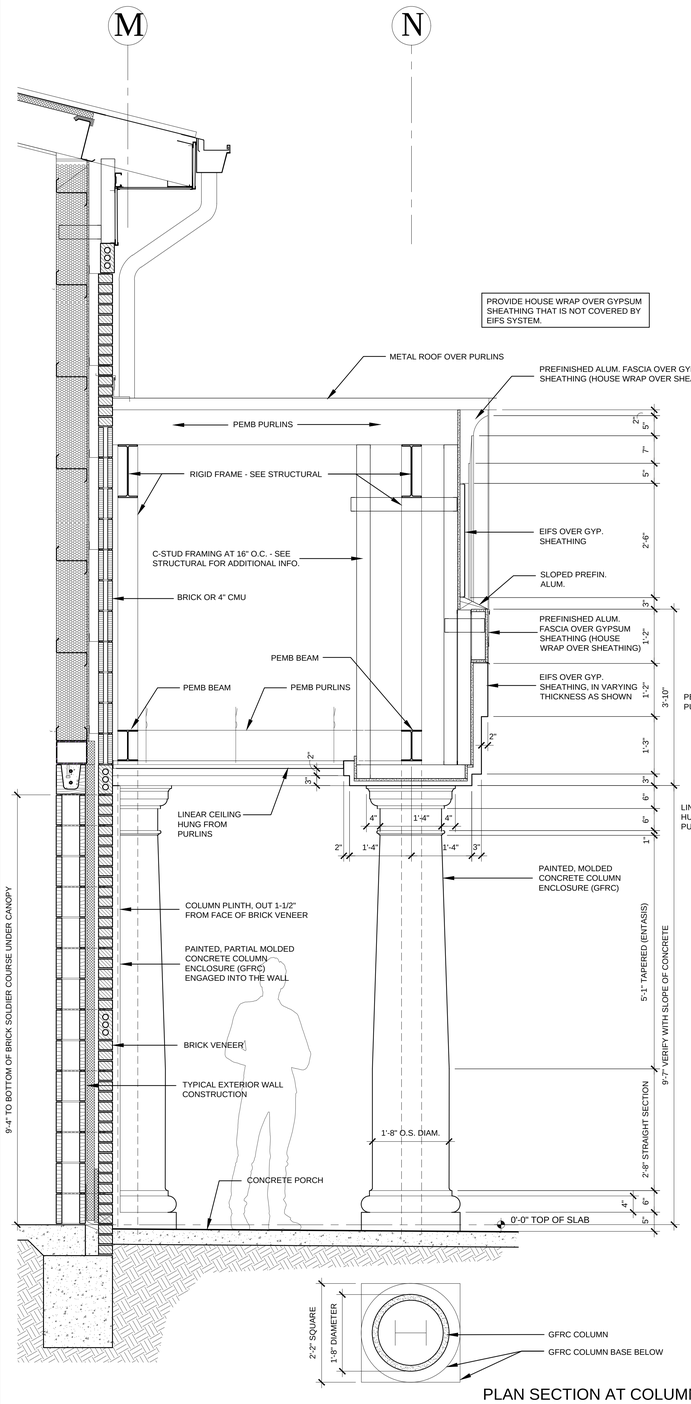

PLAN SECTION AT COLUMN

PLAN SECTION AT COLUMN

G SECTION AT SOUTHWEST ENTRANCE CANOPY

SCALE: 3/4"=1'-0"

H SECTION AT SIDE OF ENTRANCE CANOPY

SCALE: 3/4"=1'-0"

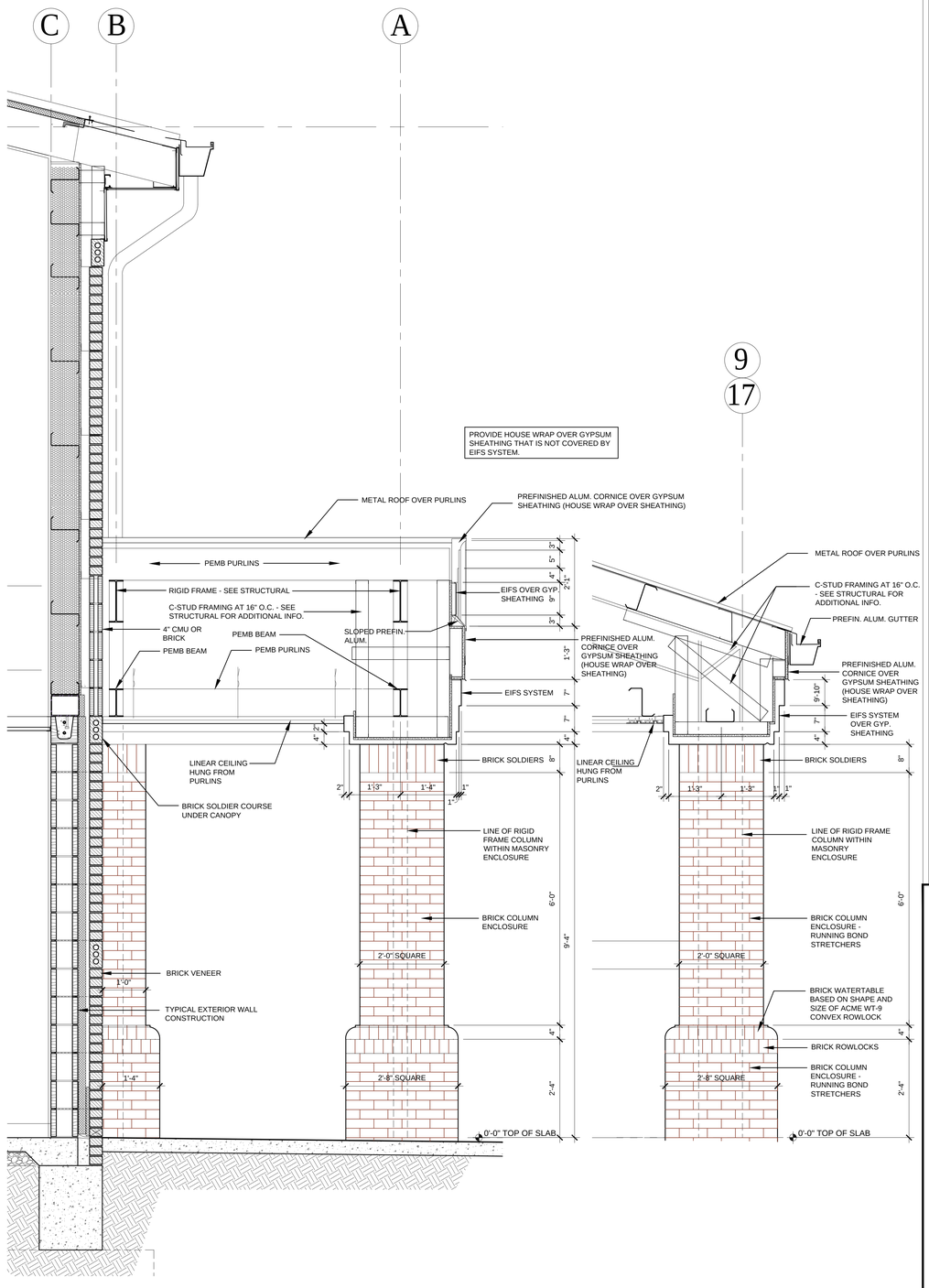

J SECTION AT EAST CANOPIES

SCALE: 3/4"=1'-0"

K SECTION AT SIDE OF CANOPIES

SCALE: 3/4"=1'-0"

ADDITIONS
TO
ROBERTSDALE HIGH SCHOOL
ROBERTSDALE, ALABAMA
FOR THE
BALDWIN COUNTY BOARD OF EDUCATION

McKEE & ASSOCIATES
ARCHITECTS, INC.
631 SOUTH HULL STREET, MONTGOMERY, ALABAMA 36104 (334) 834-9833

STATE OF ALABAMA
REGISTERED ARCHITECT
WALTER T. McKEE, JR.
No. 10822
MONTGOMERY, ALA.

SHEET TITLE : WALL SECTIONS

MCKEE JOB # : 23-195

DRAWN BY : VH

DATE: 10-11-2023

REVISED DATE:

REVISED DATE:

REVISED DATE:

SHEET NO. : A6.3

- Z:\2023\23-195 Additions to Robertsdale High School\CAD Drawings\Architectural\A6.1 Wall Sections.dwg
- Thursday, October 19, 2023 10:37:08 AM

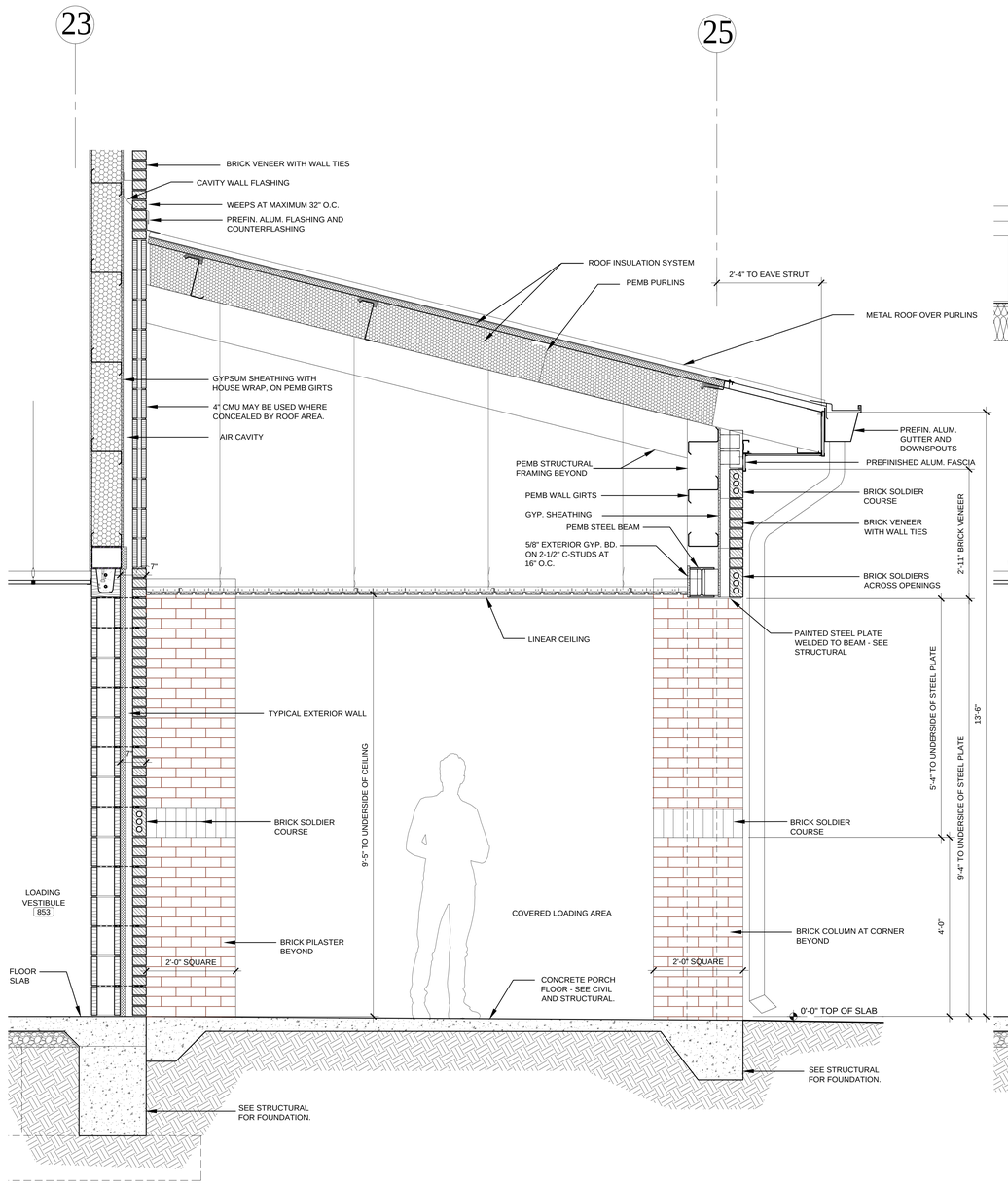

L SECTION AT BAND LOADING
SCALE: 3/4"=1'-0"

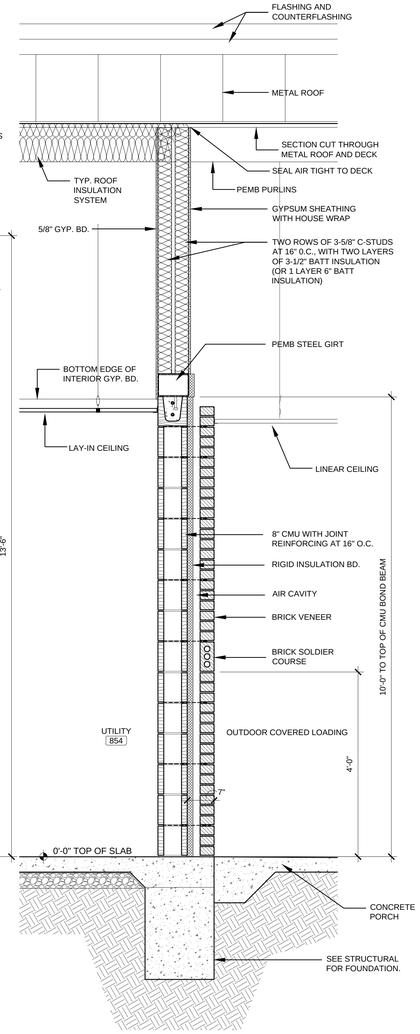

M WALL SECTION AT BAND LOADING
SCALE: 3/4"=1'-0"

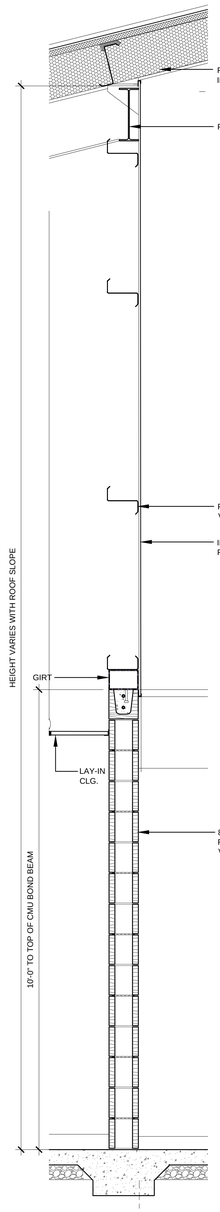

N INTERIOR PARTITION
SCALE: 3/4"=1'-0"
CEILING ON ONE SIDE

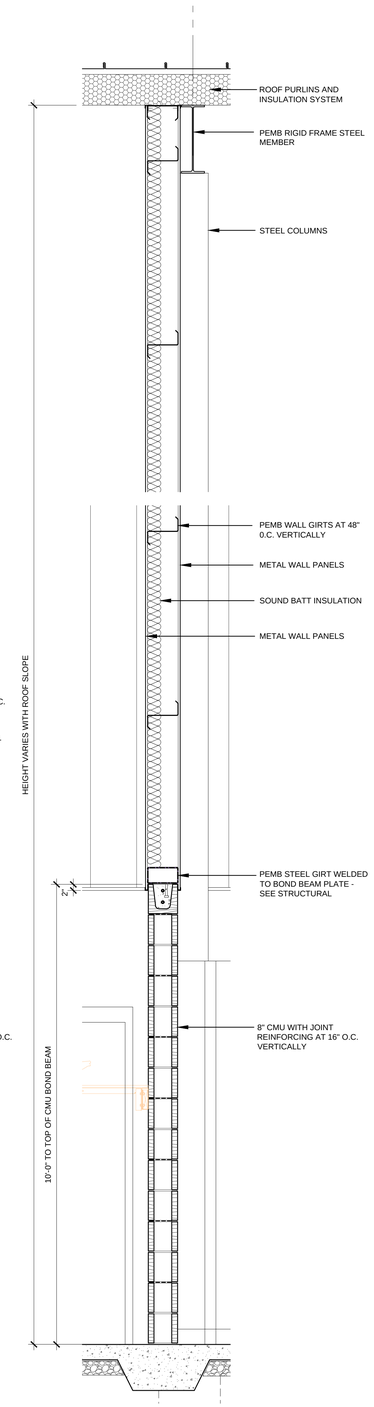

P INTERIOR PARTITION
SCALE: 3/4"=1'-0"
NO CEILING EITHER SIDE

ADDITIONS
TO
ROBERTSDALE HIGH SCHOOL
ROBERTSDALE, ALABAMA
FOR THE
BALDWIN COUNTY BOARD OF EDUCATION

McKEE & ASSOCIATES
ARCHITECTS, INC.
631 SOUTH HULL STREET , MONTGOMERY , ALABAMA 36104 (334) 834-9833

STATE OF ALABAMA REGISTERED ARCHITECT
WALTER T. McKEE, JR.
NO. 10620
MONTGOMERY, ALA.

SHEET TITLE : WALL SECTIONS

MCKEE JOB # : 23-195

DRAWN BY : VH

DATE: 10-11-2023

REVISED DATE:

REVISED DATE:

REVISED DATE:

SHEET NO. : A6.4

- Z:\2023\23-195 Additions to Robertsdale High School\CAD Drawings\Architectural\A6.1 Wall Sections.dwg
- Thursday, October 19, 2023 10:37:20 AM

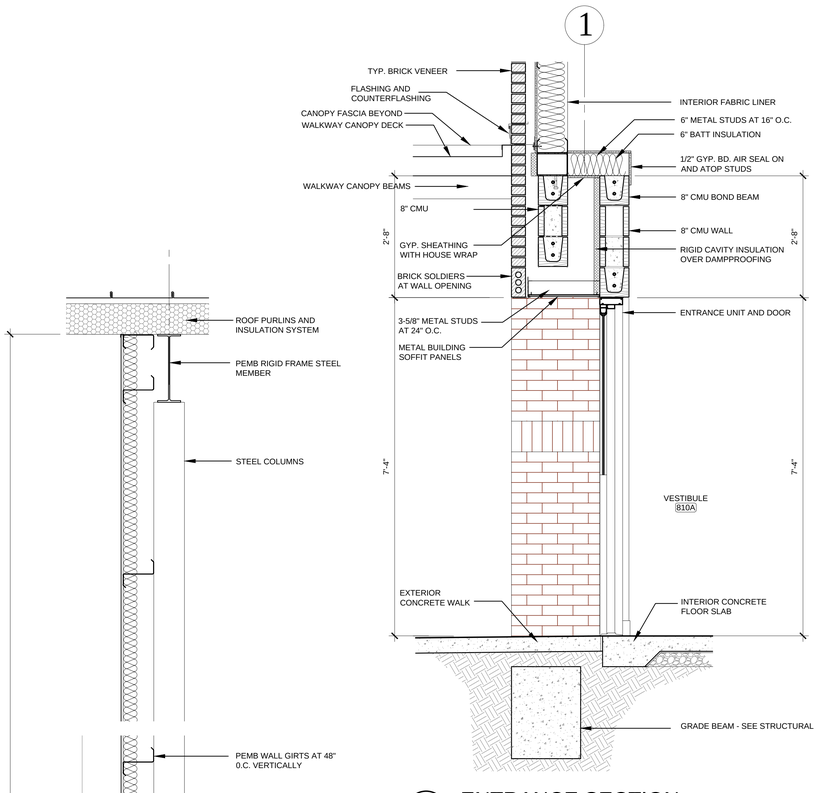

S ENTRANCE SECTION
SCALE: 3/4"=1'-0"

NOTE:
WHERE SOUND BATTS OCCUR, INSTALL SOUND ATTENUATION BLANKETS OVER CEILING PANELS. EXTEND 48 INCHES BEYOND PARTITION ON EACH SIDE. TIGHTLY FIT AROUND ALL GRILLES, HANGERS AND OTHER VERTICAL PENETRATIONS. CAREFULLY FIT BATTS AROUND (NOT OVER) RECESSED LIGHT FIXTURES.

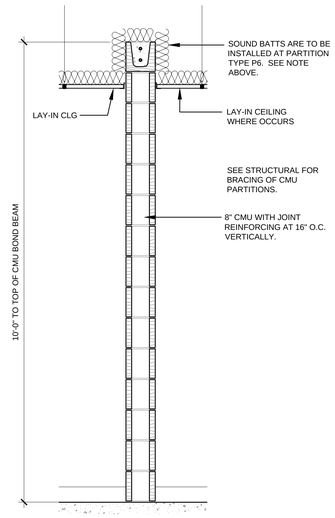

P5 P6 PARTITION TYPE
SCALE: 3/4"=1'-0"

INSTALL SOUND BATTS ONLY AT TYPE P6.

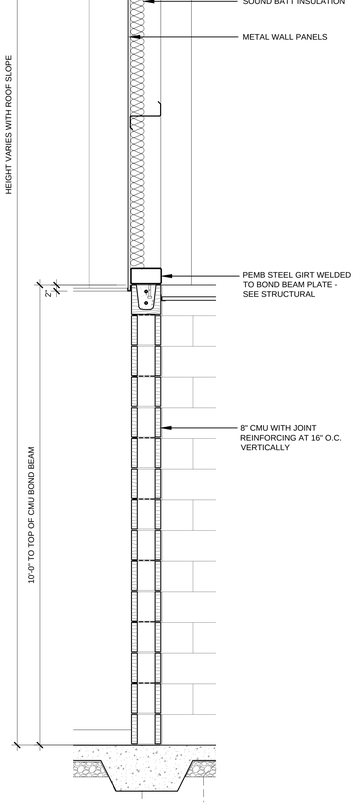

Q INTERIOR WALL
SCALE: 3/4"=1'-0"

CEILING ON ONE SIDE

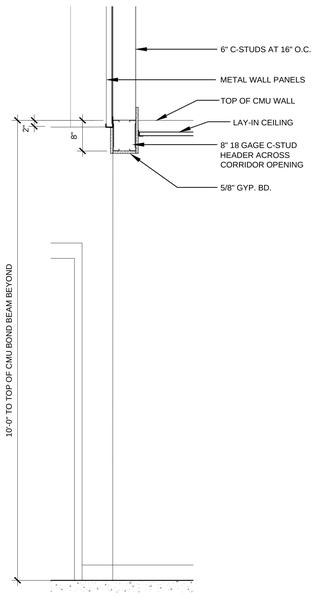

R PARTITION DETAIL
SCALE: 3/4"=1'-0"

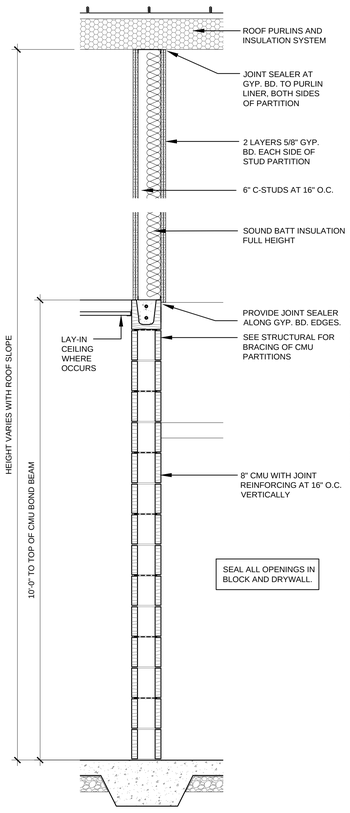

P1 SOUND PARTITION
SCALE: 3/4"=1'-0"

PARTITION TO RESIST THE PASSAGE OF SOUND.

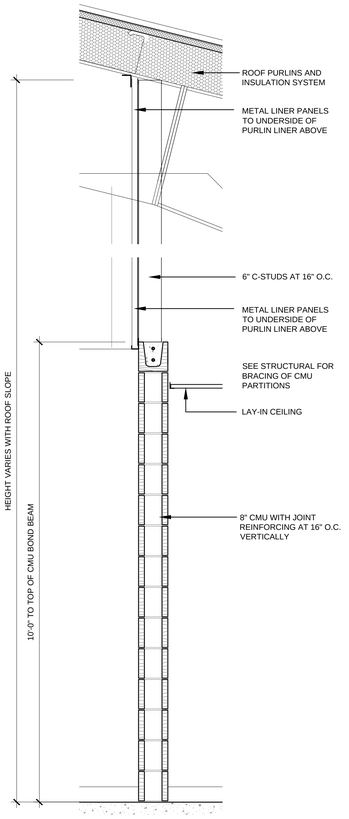

P2 PARTITION TYPE
SCALE: 3/4"=1'-0"

CEILING ON ONE SIDE

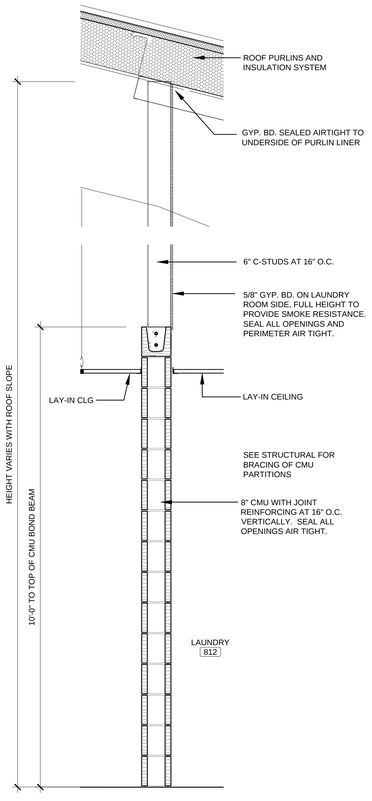

P3 PARTITION TYPE
SCALE: 3/4"=1'-0"

PARTITION TO RESIST THE PASSAGE OF SMOKE

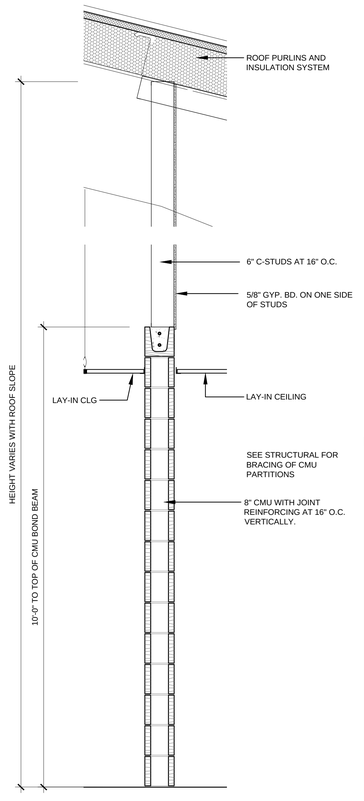

P4 PARTITION TYPE
SCALE: 3/4"=1'-0"

ADDITIONS
TO
ROBERTSDALE HIGH SCHOOL
ROBERTSDALE, ALABAMA
FOR THE
BALDWIN COUNTY BOARD OF EDUCATION

McKEE & ASSOCIATES
ARCHITECTS, INC.
631 SOUTH HULL STREET , MONTGOMERY , ALABAMA 36104 (334) 834-9933

STATE OF ALABAMA REGISTERED ARCHITECT
WALTER T. McKEE, JR.
NO. 1,000
MONTGOMERY, ALA.

SHEET TITLE : WALL SECTION AND PARTITION TYPES

MCKEE JOB # : 23-195

DRAWN BY : VH

DATE: 10-11-2023

REVISED DATE:

REVISED DATE:

REVISED DATE:

SHEET NO. : A6.5

- Z:\2023\23-195 Additions to Robertsdale High School\CAD Drawings\Architectural\A6.1 Wall Sections.dwg
- Thursday, October 19, 2023 10:36:52 AM

ROOM FINISH SCHEDULE

--- - NO WORK REQUIRED
AGBP - ACOUSTICAL GYPSUM BOARD - PAINT
GBP - GYPSUM BOARD - PAINT
GB - GYPSUM BOARD - NO PAINT
MGBP - MOISTURE RESISTANT GYPSUM BOARD - PAINT
MGB - MOISTURE RESISTANT GYPSUM BOARD - NO PAINT
IGBP - IMPACT RESISTANT GYPSUM BOARD - PAINT

CMUP - CONCRETE MASONRY UNIT - PAINT
CMU - CONCRETE MASONRY UNIT - NO PAINT
MLP - METAL LINER WALL PANELS
PT - PORCELAIN TILE
RF - RESINOUS FLOORING
SFS - SYNTHETIC SPORTS FLOORING SYSTEM

SC - SEALED CONCRETE
RSF - RUBBER SPORTS FLOORING (BY OWNER, N.I.C.)
VCT - VINYL COMPOSITION TILE
C - CARPET

PF - POLYMER FLOORING
RB - RUBBER BASE
RCB - RESINOUS COVE BASE
PTB - PORCELAIN TILE BASE

ROOM #	ROOM NAME	FLOOR	BASE	WALLS				CEILING		WAINS.	HEIGHT	REMARKS
				NORTH	SOUTH	EAST	WEST	TYPE	HEIGHT			
800	ENTRANCE LOBBY	RF	RCB	CMUP	CMUP	CMUP	CMUP	SEE CEILING PLAN		---	---	---
801	LADIES	RF	RCB / PTB	CMUP	CMUP	PT	CMUP	SEE CEILING PLAN				
802	PIPE CHASE	SC	---	CMU	CMU	CMU	CMU	SEE CEILING PLAN				
803	GENTS	RF	RCB / PTB	CMUP	CMUP	CMUP	PT	SEE CEILING PLAN				
804	JANITOR	RF	RCB	CMUP	CMUP	CMUP	CMUP	SEE CEILING PLAN				
805	MECHANICAL	RF	RCB	CMUP / GBP	CMUP / GBP	CMUP / GBP	CMUP / GBP	SEE CEILING PLAN				
806	ELECTRICAL	RF	RCB	CMUP / GBP	CMUP / GBP	CMUP / GBP	CMUP / GBP	SEE CEILING PLAN				
807	CONCESSION	RF	RCB	CMUP	CMUP	CMUP	CMUP	SEE CEILING PLAN				
808	GYMNASIUM	SFS	RCB	CMUP / MLP	CMUP / MLP	CMUP / MLP	CMUP / MLP	SEE CEILING PLAN				
809	SPRINKLER RISER	SC	---	CMU	CMU	CMU	CMU	SEE CEILING PLAN				
810	CLOSET	RF	RCB	CMUP	CMUP	CMUP	CMUP	SEE CEILING PLAN				
810A	VESTIBULE	RF	RCB	CMUP	CMUP	CMUP	CMUP	SEE CEILING PLAN				
810B	HALL	RF	RCB	CMUP	CMUP	CMUP	CMUP	SEE CEILING PLAN				
811	OFFICE	RF	RCB	CMUP	CMUP	CMUP	CMUP	SEE CEILING PLAN				
812	LAUNDRY	RF	RCB	CMUP	CMUP	CMUP	CMUP	SEE CEILING PLAN				
813	HALL	RF	RCB	CMUP	CMUP	CMUP	---	SEE CEILING PLAN				
814	GENTS DRESSING	RF	RCB	CMUP	CMUP	CMUP	CMUP	SEE CEILING PLAN				
814A	TOILET & SHOWER	RF	RCB / PTB	CMUP	PT	CMUP	PT	SEE CEILING PLAN				
815	LADIES DRESSING	RF	RCB	CMUP	CMUP	CMUP	CMUP	SEE CEILING PLAN				
815A	TOILET & SHOWER	RF	RCB / PTB	PT	CMUP	CMUP	PT	SEE CEILING PLAN				
816	MECHANICAL	RF	RCB	CMUP / GBP	CMUP / GBP	CMUP / GBP	CMUP / GBP	SEE CEILING PLAN				
817	TRAINING	RF	RCB	CMUP	CMUP	CMUP	CMUP	SEE CEILING PLAN				
818	OFFICE	RF	RCB	CMUP	CMUP	CMUP	CMUP	SEE CEILING PLAN				
819	HALL	RF	RCB	CMUP	CMUP	CMUP	---	SEE CEILING PLAN				
820	JANITOR	RF	RCB	CMUP	CMUP	CMUP	CMUP	SEE CEILING PLAN				
821	PRACTICE FIELD	RF, RSF	RCB	CMUP	CMUP	CMUP	CMUP	SEE CEILING PLAN				SEE FLOOR PLAN FOR FLOOR FINISHES AND FIELD TURF.
822	GENERAL STORAGE	RF	RCB	CMUP	CMUP	CMUP	CMUP	SEE CEILING PLAN				
823	HALLWAY	RF	RCB	CMUP	CMUP	CMUP	---	SEE CEILING PLAN				
824	MECHANICAL	RF	RCB	CMUP / GBP	CMUP / GBP	CMUP / GBP	CMUP / GBP	SEE CEILING PLAN				
825	HALL	RF	RCB	CMUP	CMUP	CMUP	CMUP	SEE CEILING PLAN				
826	STORAGE	RF	RCB	CMUP	CMUP	CMUP	CMUP	SEE CEILING PLAN				
827	LADIES DRESSING	RF	RCB	CMUP	CMUP	CMUP	CMUP	SEE CEILING PLAN				
827A	TOILET & SHOWER	RF	RCB / PTB	CMUP	CMUP	PT	CMUP	SEE CEILING PLAN				
828	OFFICE	RF	RCB	CMUP	CMUP	CMUP	CMUP	SEE CEILING PLAN				
829	OFFICE	RF	RCB	CMUP	CMUP	CMUP	CMUP	SEE CEILING PLAN				
830	GENTS DRESSING	RF	RCB	CMUP	CMUP	CMUP	CMUP	SEE CEILING PLAN				
830A	TOILET & SHOWER	RF	RCB / PTB	CMUP	CMUP	PT	CMUP	SEE CEILING PLAN				
831	ELECTRICAL & DATA	RF	RCB	CMUP / GBP	CMUP / GBP	CMUP / GBP	CMUP / GBP	SEE CEILING PLAN				
840	VESTIBULE	RF	RCB	CMUP	CMUP	CMUP	CMUP	SEE CEILING PLAN				
841	SHEET MUSIC CLOSET	RF	RCB	CMUP	CMUP	CMUP	CMUP	SEE CEILING PLAN				
842	LADIES	RF	RCB / PTB	CMUP	PT	CMUP	CMUP	SEE CEILING PLAN				
843	JANITORS	RF	RCB	CMUP	CMUP	CMUP	CMUP	SEE CEILING PLAN				
844	GENTS	RF	RCB / PTB	CMUP	PT	CMUP	CMUP	SEE CEILING PLAN				
845	BAND DIRECTOR	RF	RCB	CMUP	CMUP	CMUP	CMUP	SEE CEILING PLAN				
845A	TOILET & SHOWER	RF	RCB / PTB	PT	CMUP	CMUP	CMUP	SEE CEILING PLAN				
846	ENSEMBLE REHEARSAL	LVT	R	CMUP / AGBP	CMUP / AGBP	CMUP / AGBP	CMUP / AGBP	SEE CEILING PLAN **				** HIGH NRC LAY-IN CEILING
847	ASSISTANT DIRECTORS	LVT	R	CMUP	CMUP	CMUP	CMUP	SEE CEILING PLAN				
848	BAND ROOM	LVT	R	CMUP / AGBP	CMUP / AGBP	CMUP / AGBP	CMUP / AGBP	SEE CEILING PLAN **				** HIGH NRC LAY-IN CEILING
849	UNIFORMS STORAGE	RF	RCB	CMUP	CMUP	CMUP	CMUP	SEE CEILING PLAN				
850	HALLWAY	RF	RCB	CMUP	CMUP	CMUP	CMUP	SEE CEILING PLAN				
851	PERCUSSION STORAGE	RF	RCB	CMUP	CMUP	CMUP	CMUP	SEE CEILING PLAN				
852	MECHANICAL	SC	---	CMUP / GBP	CMUP / GBP	CMUP / GBP	CMUP / GBP	SEE CEILING PLAN				
853	LOADING VESTIBULE	RF	RCB	CMUP	CMUP	CMUP	CMUP	SEE CEILING PLAN				
854	UTILITY	RF	RCB	CMUP	CMUP	CMUP	CMUP	SEE CEILING PLAN				
855	MECHANICAL	SC	---	CMUP / GBP	CMUP / GBP	CMUP / GBP	CMUP / GBP	SEE CEILING PLAN				
856	MECHANICAL	SC	---	CMUP / GBP	CMUP / GBP	CMUP / GBP	CMUP / GBP	SEE CEILING PLAN				

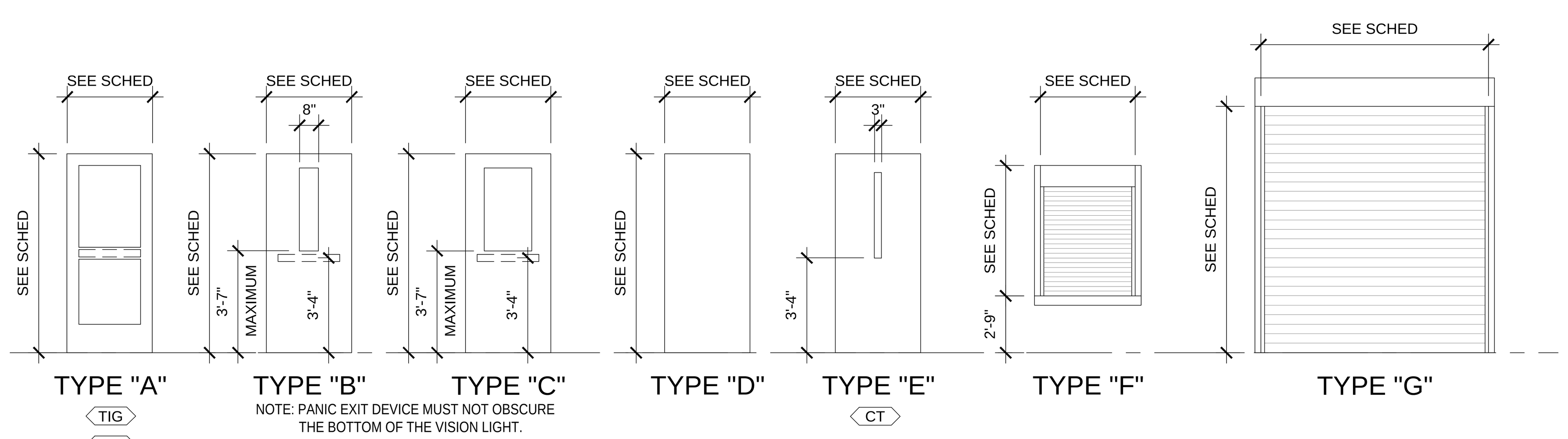

DOOR TYPES
SCALE: 1/4" - 1'-0"

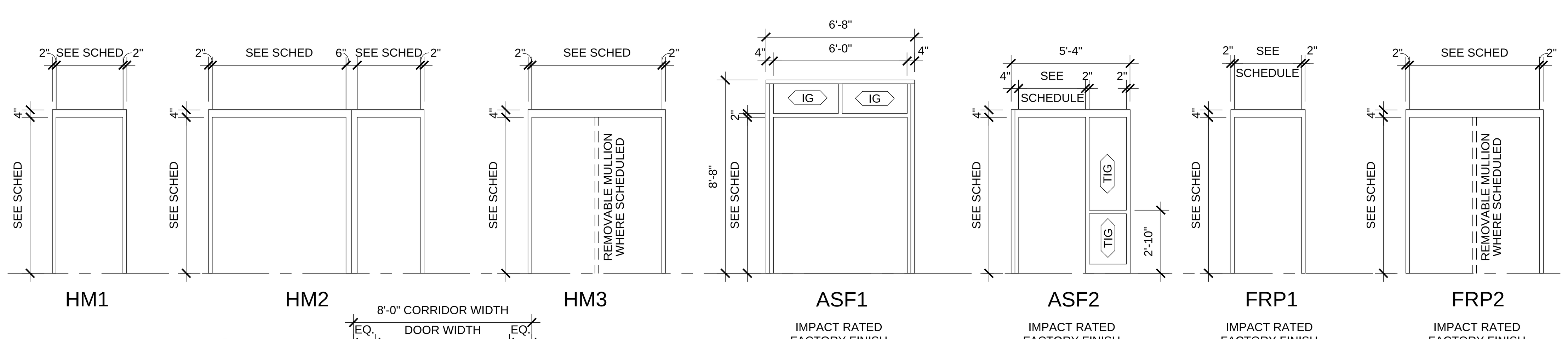

FRAME TYPES
SCALE: 1/4" - 1'-0"

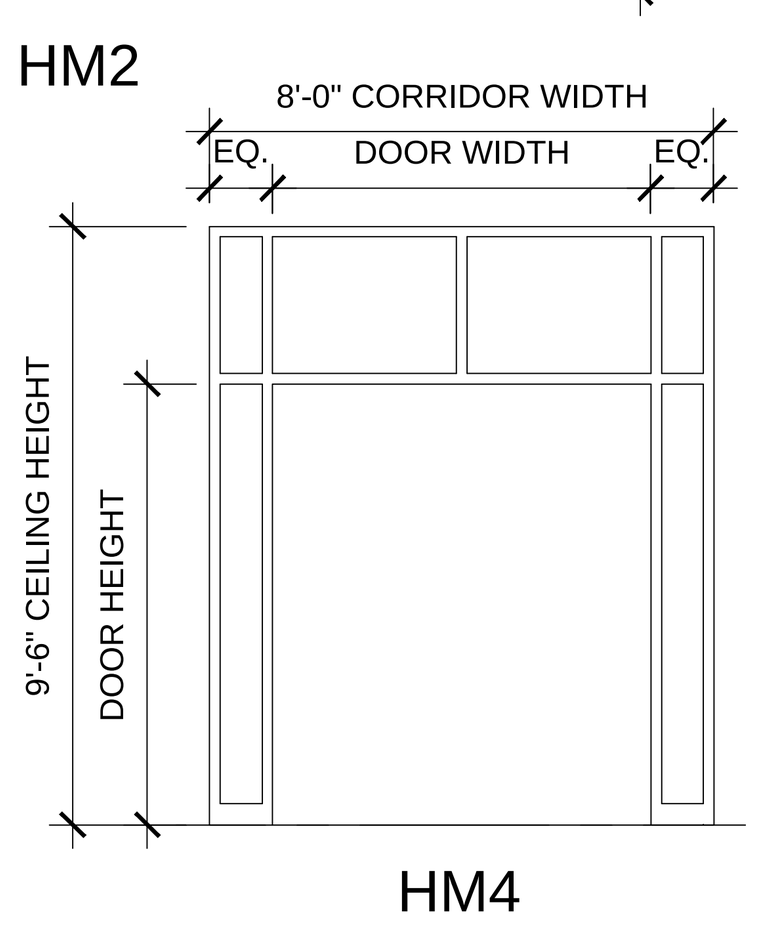

HM = HOLLOW METAL (STEEL)
ASF = ALUMINUM STOREFRONT
FRP = FIBERGLASS REINFORCED PLASTIC

GLAZING SCHEDULE

SYMBOL	DESCRIPTION
CT	CLEAR TEMPERED
CTI	CLEAR TEMPERED - IMPACT RATED
IG	INSULATING GLASS - EXTERIOR SHEET IMPACT RATED
IGO	INSULATING GLASS, OBSCURE - EXTERIOR SHEET IMPACT RATED
TIG	TEMPERED INSULATING GLASS - EXTERIOR SHEET IMPACT RATED

DOOR SCHEDULE

DOOR #	WIDTH	HEIGHT	THICKNESS	MATERIALS	DOOR TYPE	DOOR FINISH	FRAME TYPE	FRAME FINISH	LABEL	DETAILS HEAD	DETAILS JAMB	SIGNAGE	REMARKS
800a	PAIR 3'-0"	7'-0"	1 3/4"	FIBERGLASS REINF. PLASTIC	A	FACTORY	ASF1	FACTORY	---	15/A8.2	9/A8.2	---	INSULATED
800b	PAIR 3'-0"	7'-0"	1 3/4"	FIBERGLASS REINF. PLASTIC	A	FACTORY	ASF1	FACTORY	---	15/A8.2	9/A8.2	---	INSULATED
801	3'-0"	7'-0"	1 3/4"	FLUSH WOOD	D	FACTORY	HM1	PAINT	---	4/A8.2	5/A8.2	801 LADIES	---
802	2'-8"	7'-0"	1 3/4"	FLUSH WOOD	D	FACTORY	HM1	PAINT	---	4/A8.2	5/A8.2	802 PIPE CHASE	---
803	3'-0"	7'-0"	1 3/4"	FLUSH WOOD	D	FACTORY	HM1	PAINT	---	4/A8.2	5/A8.2	803 GENTLEMEN	---
804	3'-0"	7'-0"	1 3/4"	FLUSH WOOD	D	FACTORY	HM1	PAINT	---	4/A8.2	5/A8.2	804 JANITORIAL	---
805	3'-8"	7'-0"	1 3/4"	FLUSH WOOD	D	FACTORY	HM1	PAINT	---	4/A8.2	5/A8.2	805 MECHANICAL	---
806	3'-4"	7'-0"	1 3/4"	FLUSH WOOD	D	FACTORY	HM1	PAINT	---	4/A8.2	5/A8.2	806 ELECTRICAL	---
807a	3'-4"	7'-0"	1 3/4"	FLUSH WOOD	B	FACTORY	HM1	PAINT	---	4/A8.2	5/A8.2	807 CONCESSION	---
807b	7'-0"	4'-3"	---	COUNTER SHUTTER	F	FACTORY	INTEGRAL	FACTORY	---	6/A8.2	7/A8.2	---	CONFIRM SHUTTER SIZE FOR 7'-4" WIDE MASONRY OPENING
808a	PAIR 3'-0"	7'-0"	1 3/4"	FLUSH WOOD	C	FACTORY	HM2	PAINT	---	4/A8.2	5/A8.2	---	IMPACT RESISTANT GLASS
808b	3'-0"	7'-0"	1 3/4"	FLUSH WOOD	C	FACTORY	HM2	PAINT	---	4/A8.2	5/A8.2	---	IMPACT RESISTANT GLASS
808c	3'-0"	7'-0"	1 3/4"	FLUSH WOOD	E	FACTORY	HM1	PAINT	---	4/A8.2	5/A8.2	---	---
808d	PAIR 3'-0"	7'-0"	1 3/4"	FLUSH WOOD	B	FACTORY	HM1	PAINT	---	4/A8.2	5/A8.2	---	---
808e	PAIR 3'-4"	8'-0"	1 3/4"	FIBERGLASS REINF. PLASTIC	E	FACTORY	FRP2	FACTORY	---	8/A8.2	9/A8.2	---	INSULATED
808f	PAIR 3'-0"	7'-0"	1 3/4"	FLUSH WOOD	B	FACTORY	HM1	PAINT	---	4/A8.2	5/A8.2	---	---
809	3'-4"	7'-0"	1 3/4"	FIBERGLASS REINF. PLASTIC	D	FACTORY	FRP1	FACTORY	---	8/A8.2	9/A8.2	809 SPRINKLER RISER	INSULATED
810	3'-4"	7'-0"	1 3/4"	FLUSH WOOD	E	FACTORY	HM1	FACTORY	---	4/A8.2	5/A8.2	810 CLOSET	---
810A	3'-4"	7'-0"	1 3/4"	FIBERGLASS REINF. PLASTIC	A	FACTORY	ASF2	FACTORY	---	8/A8.2	9/A8.2	---	INSULATED
811	3'-0"	7'-0"	1 3/4"	FLUSH WOOD	C	FACTORY	HM1	PAINT	---	4/A8.2	5/A8.2	811 OFFICE	---
812	3'-4"	7'-0"	1 3/4"	FLUSH WOOD	C	FACTORY	HM1	PAINT	---	4/A8.2	5/A8.2	812 LAUNDRY	---
814	3'-0"	7'-0"	1 3/4"	FLUSH WOOD	D	FACTORY	HM1	PAINT	---	4/A8.2	5/A8.2	814 GENTLEMEN DRESSING	---
815	3'-0"	7'-0"	1 3/4"	FLUSH WOOD	D	FACTORY	HM1	PAINT	---	4/A8.2	5/A8.2	815 LADIES DRESSING	---
816	3'-4"	7'-0"	1 3/4"	FLUSH WOOD	D	FACTORY	HM1	PAINT	---	4/A8.2	5/A8.2	816 MECHANICAL	---
817	3'-4"	7'-0"	1 3/4"	FLUSH WOOD	E	FACTORY	HM1	PAINT	---	4/A8.2	5/A8.2	817 TRAINING	---
818	3'-0"	7'-0"	1 3/4"	FLUSH WOOD	C	FACTORY	HM1	PAINT	---	4/A8.2	5/A8.2	818 OFFICE	---
820	3'-0"	7'-0"	1 3/4"	FLUSH WOOD	D	FACTORY	HM1	PAINT	---	4/A8.2	5/A8.2	820 JANITORIAL	---
821a	PAIR 3'-0"	7'-0"	1 3/4"	FLUSH WOOD	B	FACTORY	HM3	PAINT	---	4/A8.2	5/A8.2	821 PRACTICE FIELD	---
821b	PAIR 3'-0"	7'-0"	1 3/4"	FIBERGLASS REINF. PLASTIC	E	FACTORY	FRP1	FACTORY	---	15/A8.2	9/A8.2	---	INSULATED
823	PAIR 4'-0"	8'-0"	1 3/4"	FIBERGLASS REINF. PLASTIC	E	FACTORY	FRP2	FACTORY	---	13/A8.2	9/A8.2	---	INSULATED
824	3'-8"	7'-0"	1 3/4"	FLUSH WOOD	D	FACTORY	HM1	PAINT	---	4/A8.2	5/A8.2	824 MECHANICAL	---
826	3'-4"	7'-0"	1 3/4"	FLUSH WOOD	D	FACTORY	HM1	PAINT	---	4/A8.2	5/A8.2	826 STORAGE	---
827	3'-0"	7'-0"	1 3/4"	FLUSH WOOD	D	FACTORY	HM1	PAINT	---	4/A8.2	5/A8.2	827 LADIES LOCKER ROOM	---
828	3'-0"	7'-0"	1 3/4"	FLUSH WOOD	C	FACTORY	HM1	PAINT	---	4/A8.2	5/A8.2	828 OFFICE	---
829	3'-0"	7'-0"	1 3/4"	FLUSH WOOD	C	FACTORY	HM1	PAINT	---	4/A8.2	5/A8.2	829 OFFICE	---
830	3'-0"	7'-0"	1 3/4"	FLUSH WOOD	D	FACTORY	HM1	PAINT	---	4/A8.2	5/A8.2	830 GENTS LOCKER ROOM	---
831	3'-4"	7'-0"	1 3/4"	FLUSH WOOD	D	FACTORY	HM1	PAINT	---	4/A8.2	5/A8.2	831 ELECTRICAL & DATA	---
840a	PAIR 3'-0"	7'-0"	1 3/4"	FIBERGLASS REINF. PLASTIC	A	FACTORY	FRP2	FACTORY	---	13/A8.2	9/A8.2	---	INSULATED
840b	PAIR 3'-0"	7'-0"	1 3/4"	FLUSH WOOD	C	FACTORY	HM4	PAINT	---	BRACE TO STRUCTURE	5/A8.2 SIMILAR	---	---
841	3'-0"	7'-0"	1 3/4"	FLUSH WOOD	B	FACTORY	HM1	PAINT	---	4/A8.2	5/A8.2	841 MUSIC CLOSET	---
842	3'-0"	7'-0"	1 3/4"	FLUSH WOOD	D	FACTORY	HM1	PAINT	---	4/A8.2	5/A8.2	842 LADIES	---
843	3'-4"	7'-0"	1 3/4"	FLUSH WOOD	D	FACTORY	HM1	PAINT	---	4/A8.2	5/A8.2	843 JANITORIAL	---
844	3'-0"	7'-0"	1 3/4"	FLUSH WOOD	D	FACTORY	HM1	PAINT	---	4/A8.2	5/A8.2	844 GENTLEMEN	---
845	3'-0"	7'-0"	1 3/4"	FLUSH WOOD	C	FACTORY	HM1	PAINT	---	4/A8.2	5/A8.2	845 BAND DIRECTOR	---
845a	3'-0"	7'-0"	1 3/4"	FLUSH WOOD	D	FACTORY	HM1	PAINT	---	4/A8.2	5/A8.2	845A SHOWER	---
845b	3'-0"	7'-0"	1 3/4"	FLUSH WOOD	D	FACTORY	HM1	PAINT	---	4/A8.2	5/A8.2	845A SHOWER	---
846	3'-0"	7'-0"	1 3/4"	FIBERGLASS REINF. PLASTIC	D	FACTORY	FRP1	FACTORY	---	8/A8.2	9/A8.2	---	INSULATED
847a	3'-0"	7'-0"	1 3/4"	FLUSH WOOD	C	FACTORY	HM1	PAINT	---	4/A8.2	5/A8.2	847 ASSISTANT DIRECTOR	
847b	3'-0"	7'-0"	1 3/4"	FLUSH WOOD	C	FACTORY	HM1	FACTORY	---	4/A8.2	5/A8.2	---	---
848a	PAIR 3'-0"	7'-0"	1 3/4"	ACOUSTICAL METAL DOOR	B	FACTORY	HM1	PAINT	---	4/A8.2	5/A8.2	848 BAND REHEARSAL	50 STC WITH SOUND STRIPS & DROP SEAL
848b	PAIR 3'-0"	7'-0"	1 3/4"	FIBERGLASS REINF. PLASTIC	E	FACTORY	HM1	FACTORY	---	13/A8.2	9/A8.2	---	INSULATED
849	PAIR 3'-0"	7'-0"	1 3/4"	FLUSH WOOD	B	FACTORY	HM1	PAINT	---	4/A8.2	5/A8.2	849 STORAGE	---
850a	4'-0"	7'-0"	1 3/4"	FLUSH WOOD	B	FACTORY	HM1	PAINT	---	4/A8.2	5/A8.2	850 HALLWAY	
850b	4'-0"	7'-0"	1 3/4"	FLUSH WOOD	B	FACTORY	HM1	PAINT	---	4/A8.2	5/A8.2	---	---
851	PAIR 3'-0"	7'-0"	1 3/4"	FLUSH WOOD	B	FACTORY	HM1	PAINT	---	4/A8.2	5/A8.2	851 STORAGE	---
852	PAIR 3'-0"	7'-0"	1 3/4"	FIBERGLASS REINF. PLASTIC	D	FACTORY	FRP1	FACTORY	---	8/A8.2	9/A8.2	852 MECHANICAL	INSULATED
853a	8'-0"	7'-4"	---	COILING DOOR	G	PAINT	INTEGRAL	PAINT	---	11/A8.2	12/A8.2	---	INSULATED
853b	PAIR 3'-6"	7'-0"	1 3/4"	FLUSH WOOD	E	FACTORY	HM1	PAINT	---	4/A8.2	5/A8.2	853 LOADING VESTIBULE	---
854	4'-0"	7'-4"	1 3/4"	FIBERGLASS REINF. PLASTIC	D	FACTORY	FRP1	FACTORY	---	8/A8.2	9/A8.2	854 UTILITY	INSULATED
854a	3'-0"	7'-0"	1 3/4"	FLUSH WOOD	E	FACTORY	HM1	PAINT	---	4/A8.2	5/A8.2	854 UTILITY	---
855	PAIR 3'-0"	7'-4"	1 3/4"	FIBERGLASS REINF. PLASTIC	D	FACTORY	FRP1	FACTORY	---	4/A8.2	5/A8.2	855 MECHANICAL	INSULATED
856	PAIR 3'-0"	7'-4"	1 3/4"	FIBERGLASS REINF. PLASTIC	D	FACTORY	FRP2	FACTORY	---	8/A8.2	9/A8.2	856 MECHANICAL	INSULATED
---	---	---	---	---	---	---	---	---	---	---	---	846 ENSEMBLE REHEARSAL	PROVIDE SIGN ON THE WALL ADJACENT TO THE CORRIDOR.

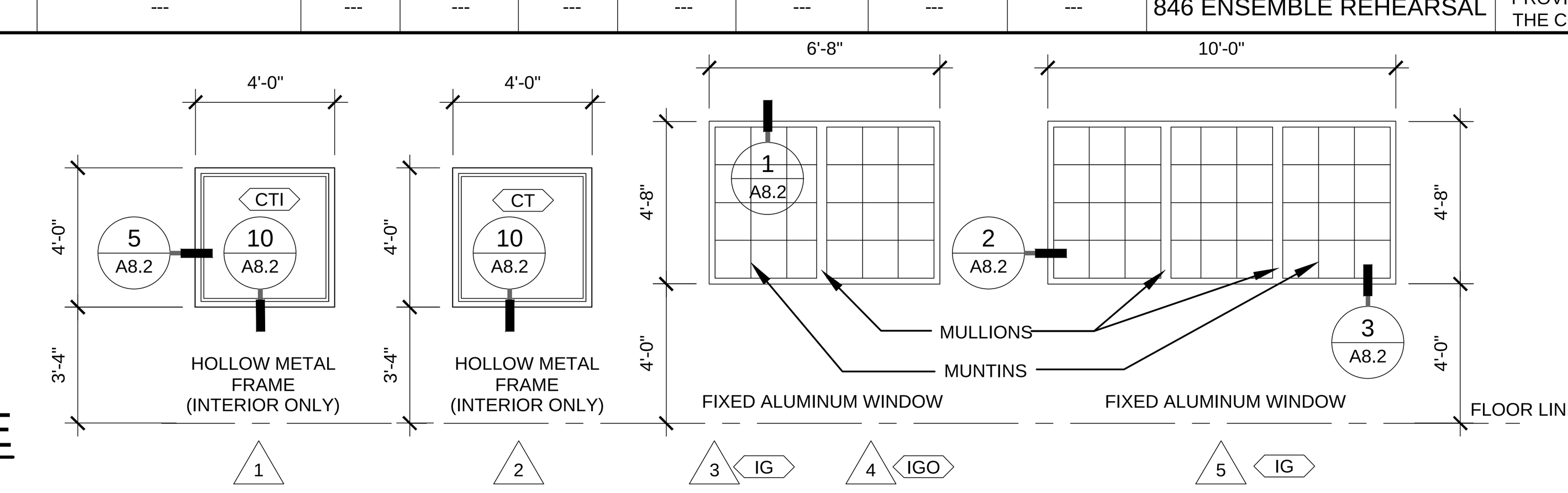

WINDOW SCHEDULE
SCALE: 1/4" - 1'-0"

ADDITIONS
TO
ROBERTSDALE HIGH SCHOOL
ROBERTSDALE, ALABAMA
FOR THE
BALDWIN COUNTY BOARD OF EDUCATION

McKEE & ASSOCIATES
ARCHITECTS, INC.
631 SOUTH HULL STREET , MONTGOMERY , ALABAMA 36104 (334) 834-9933

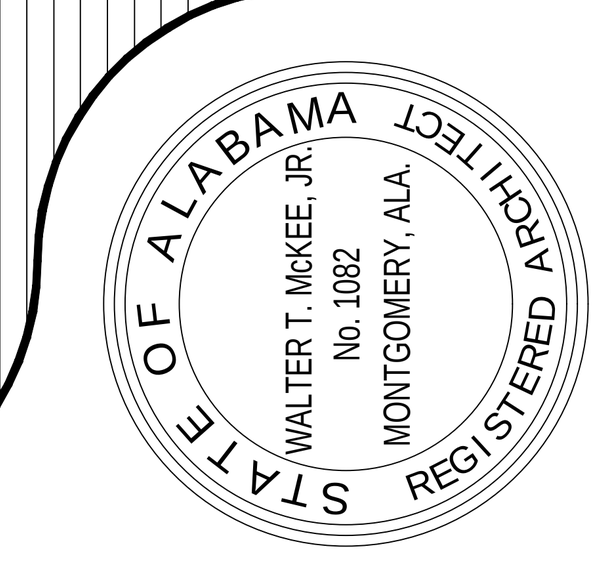

SHEET TITLE : FINISH SCHEDULE, DOOR SCHEDULE, WINDOW SCHEDULE

MCKEE JOB # : 23-195

DRAWN BY : JL, VH

DATE: 10-11-2023

REVISED DATE:

REVISED DATE:

REVISED DATE:

SHEET NO. : A8.1

- Z:\2023\23-195 Additions to Robertsdale High School\CAD Drawings\Architectural\A8.1 Finish Schedule.dwg
- Thursday, October 19, 2023 10:36:16 AM

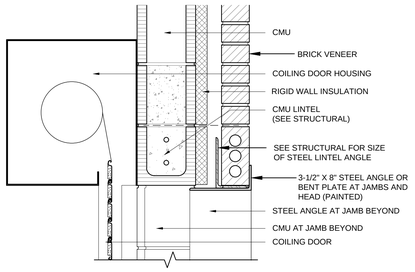

11 DOOR DETAIL
SCALE: 1 1/2"=1'-0" HEAD

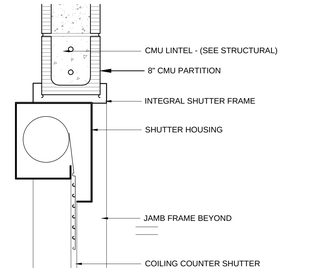

6 SHUTTER DETAIL
SCALE: 1 1/2"=1'-0" HEAD

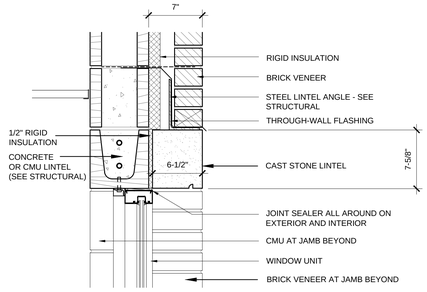

1 WINDOW DETAIL
SCALE: 1 1/2"=1'-0" HEAD

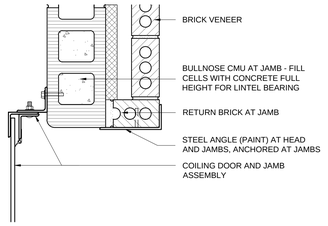

12 DOOR DETAIL
SCALE: 1 1/2"=1'-0" JAMB

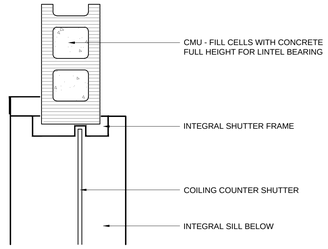

7 SHUTTER DETAIL
SCALE: 1 1/2"=1'-0" JAMB

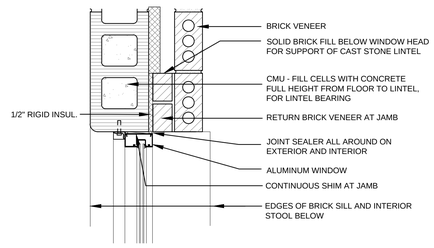

2 WINDOW DETAIL
SCALE: 1 1/2"=1'-0" JAMB

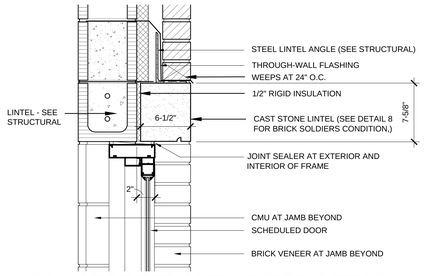

13 STOREFRONT OR FRP DETAIL
SCALE: 1 1/2"=1'-0" HEAD

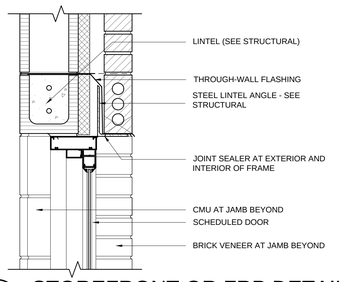

8 STOREFRONT OR FRP DETAIL
SCALE: 1 1/2"=1'-0" HEAD

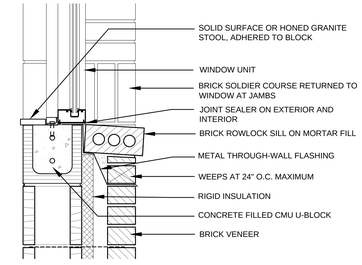

3 WINDOW DETAIL
SCALE: 1 1/2"=1'-0" SILL

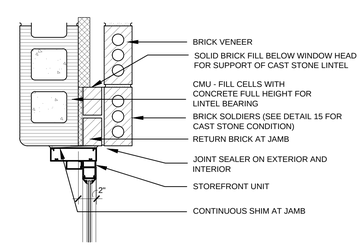

9 STOREFRONT OR FRP DETAIL
SCALE: 1 1/2"=1'-0" JAMB

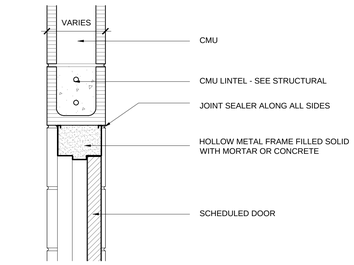

4 DOOR DETAIL (WINDOW SIM.)
SCALE: 1 1/2"=1'-0" HEAD

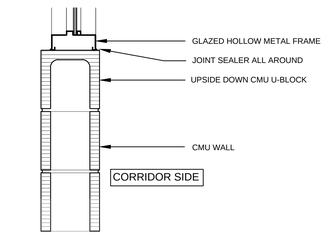

10 GLAZED FRAME DETAIL
SCALE: 1 1/2"=1'-0" SILL

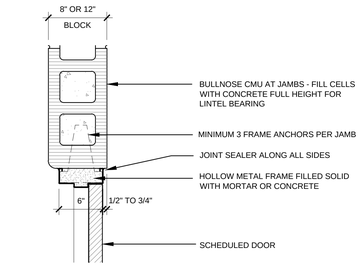

5 DOOR DETAIL (WINDOW SIM.)
SCALE: 1 1/2"=1'-0" JAMB

ADDITIONS
TO
ROBERTSDALE HIGH SCHOOL
ROBERTSDALE, ALABAMA
FOR THE
BALDWIN COUNTY BOARD OF EDUCATION

McKEE & ASSOCIATES
ARCHITECTS, INC.
631 SOUTH HULL STREET, MONTGOMERY, ALABAMA 36104 (334) 834-9933

STATE OF ALABAMA REGISTERED ARCHITECT
WALTER T. McKEE, JR.
NO. 10602
MONTGOMERY, ALA.

SHEET TITLE : DOOR AND WINDOW DETAILS

MCKEE JOB # : 23-195

DRAWN BY : JL, VH

DATE: 10-11-2023

REVISED DATE:

REVISED DATE:

REVISED DATE:

SHEET NO. : A8.2

- Z:\2023\23-195 Additions to Robertsdale High School\CAD Drawings\Architectural\A8.2 Door and Window Details.dwg
- Thursday, October 19, 2023 10:36:20 AM

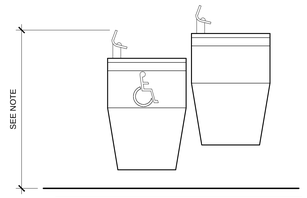

ELECTRIC WATER COOLER (EWC)
SCALE: 1 1/2" - 1'-0"

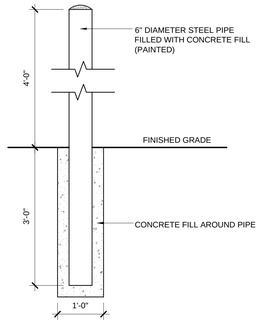

PIPE BOLLARD (PB)
SCALE: 1 1/2" - 1'-0"

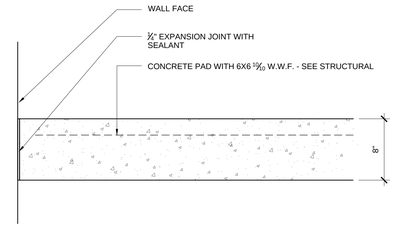

HVAC EQUIPMENT PAD (CEP)
SCALE: 1 1/2" - 1'-0"

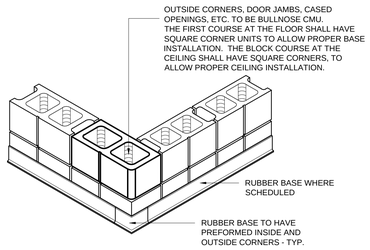

RUBBER BASE DETAIL
SCALE: 3/4" - 1'-0"

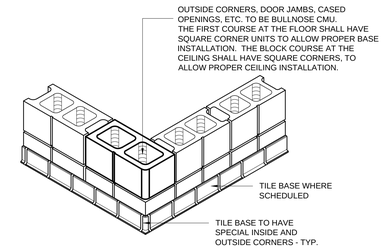

HARD TILE DETAIL
SCALE: 3/4" - 1'-0"

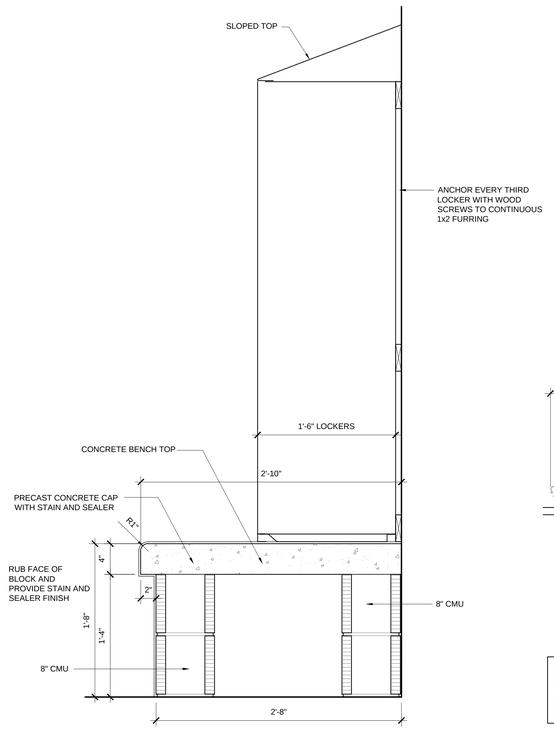

LOCKER AND BENCH DETAIL
SCALE: 1 1/2" - 1'-0"

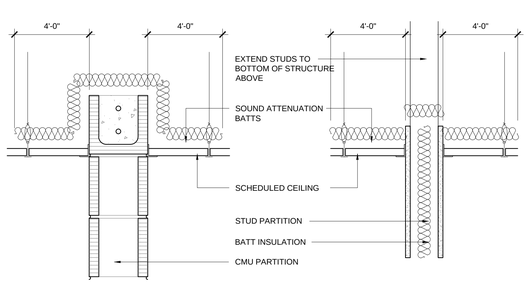

NOTE:
SEE FLOOR PLAN SHEETS FOR INTERIOR PARTITIONS DESIGNATED TO RECEIVE BATT INSULATION FULL HEIGHT BETWEEN STUDS. ALL NON-RATED INTERIOR PARTITIONS TO HAVE SOUND BLANKETS ABOVE - TYPICAL. INSTALL SOUND ATTENUATION BLANKETS OVER CEILING PANELS. EXTEND 48 INCHES BEYOND PARTITION AND TIGHTLY FIT AROUND ALL GRILLES, HANGERS AND OTHER VERTICAL PENETRATIONS. THIS INSULATION TO BE CAREFULLY FIT AROUND (NOT OVER) RECESSED LIGHT FIXTURES.

SOUND BATT ATTENUATION DETAIL (SA)
SCALE: 1 1/2" - 1'-0"

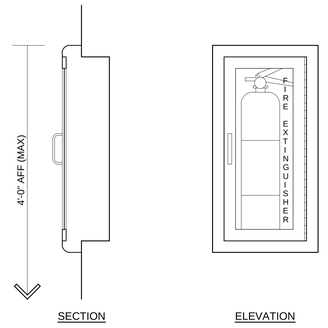

SECTION ELEVATION

FIRE EXTINGUISHER CABINET (FEC)
SCALE: 1 1/2" - 1'-0"

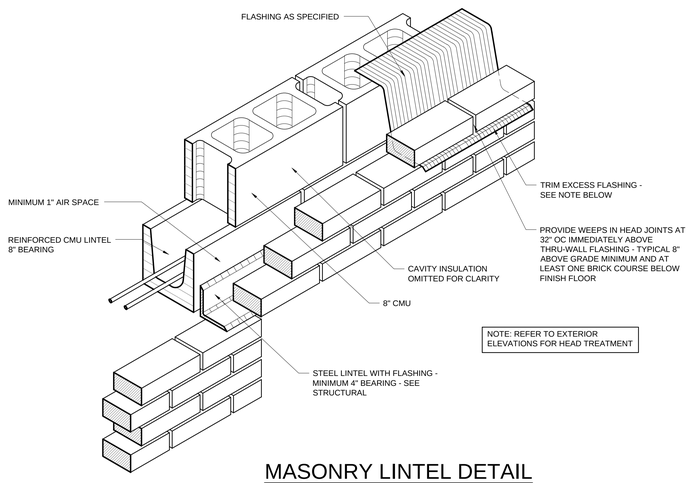

NOTE: REFER TO EXTERIOR ELEVATIONS FOR HEAD TREATMENT

MASONRY LINTEL DETAIL
SCALE: 1 1/2" - 1'-0"

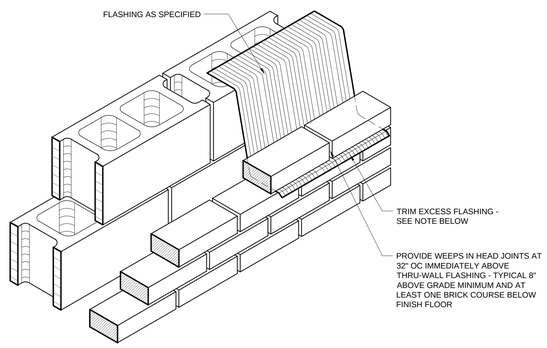

NOTE: BRICK INSTITUTE OF AMERICA TECHNICAL NOTE # 7 STATES THAT ALL FLASHING MUST EXTEND PAST THE EXTERIOR FACE OF THE MASONRY OR BE CUT FLUSH WITH THE EXTERIOR MASONRY. CUT FABRIC TYPE FLASHING FLUSH WITH THE EXTERIOR FACE OF MASONRY AFTER BEING LEFT EXPOSED FOR INSPECTION PURPOSES ONLY.

THRU-WALL FLASHING DETAIL
SCALE: 1 1/2" - 1'-0"

ADDITIONS TO ROBERTSDALE HIGH SCHOOL
ROBERTSDALE, ALABAMA
FOR THE
BALDWIN COUNTY BOARD OF EDUCATION

McKEE & ASSOCIATES
ARCHITECTS, INC.
631 SOUTH HULL STREET, MONTGOMERY, ALABAMA 36104 (334) 834-9833

STATE OF ALABAMA REGISTERED ARCHITECT
WALTER T. McKEE, JR.
NO. 3,802
MONTGOMERY, ALA.

SHEET TITLE : MISCELLANEOUS DETAILS

MCKEE JOB # : 23-195

DRAWN BY : VH

DATE: 10-11-2023

REVISED DATE:

REVISED DATE:

REVISED DATE:

SHEET NO. : A9.1

- Z:\2023\23-195 Additions to Robertsdale High School\CAD Drawings\Architectural\A9.1 Miscellaneous Details.dwg
- Thursday, October 19, 2023 10:36:44 AM

1 CONDENSING UNIT SCREEN WALL ELEVATION
SCALE: 3/4" = 1'-0"

2 CONDENSING UNIT SCREEN WALL SECTION
SCALE: 3/4" = 1'-0"

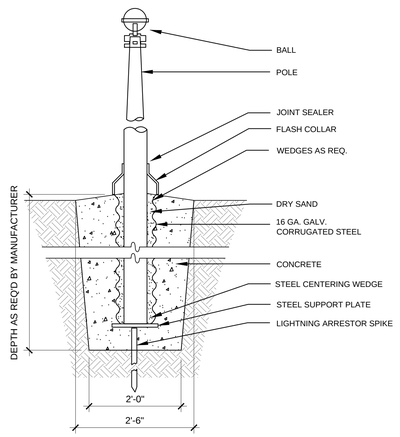

3 FLAG POLE
SCALE: 3/4" = 1'-0"

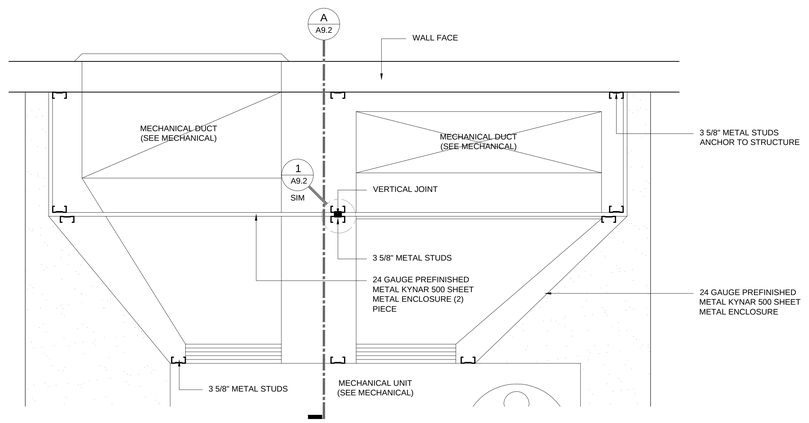

HVAC SHROUD PLAN DETAIL
SCALE: 3/4" - 1'-0"

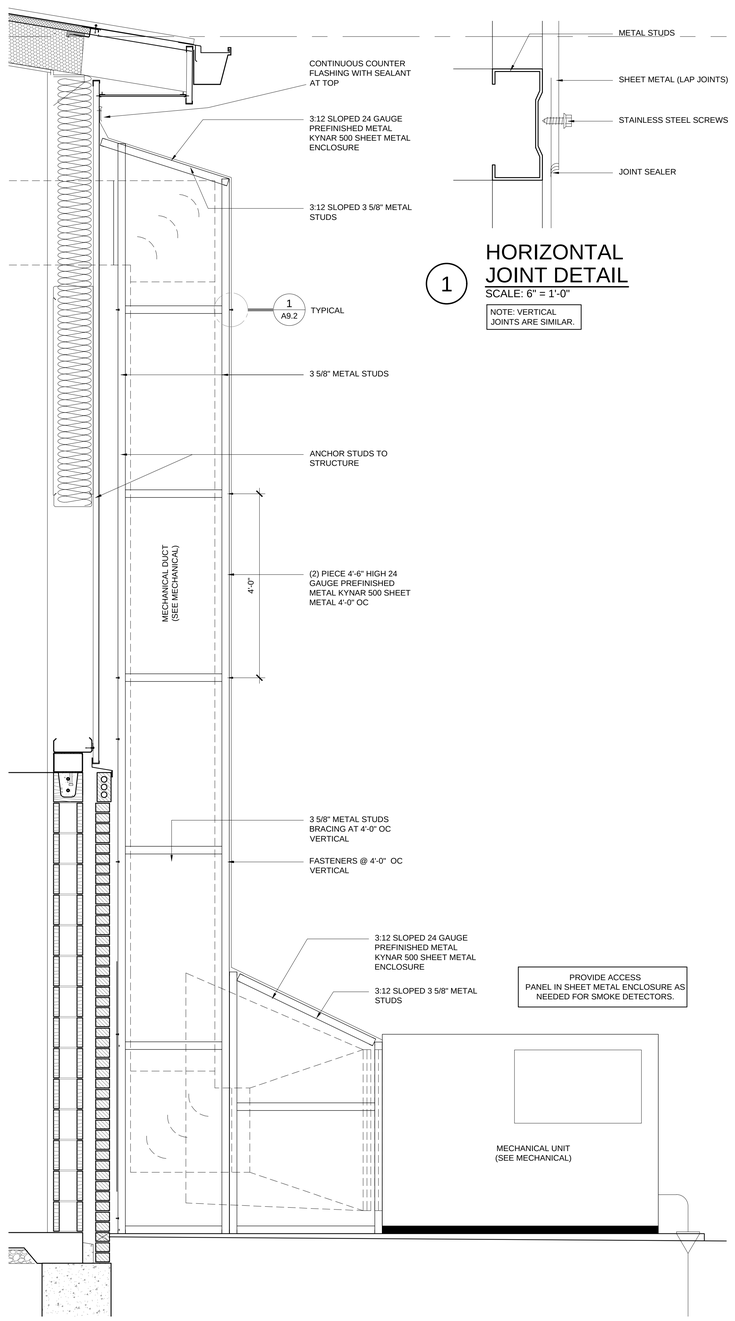

A HVAC SHROUD SECTION DETAIL
SCALE: 3/4" = 1'-0"

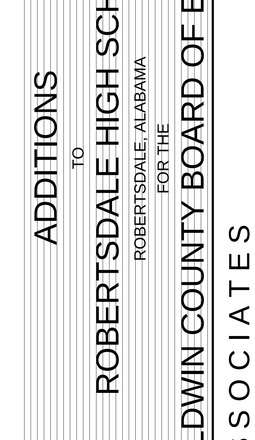

1 HORIZONTAL JOINT DETAIL
SCALE: 6" = 1'-0"

NOTE: VERTICAL JOINTS ARE SIMILAR.

ADDITIONS TO ROBERTSDALE HIGH SCHOOL

ROBERTSDALE, ALABAMA

FOR THE

BALDWIN COUNTY BOARD OF EDUCATION

McKEE & ASSOCIATES
ARCHITECTS, INC.
631 SOUTH HULL STREET, MONTGOMERY, ALABAMA 36104 (334) 834-9933

STATE OF ALABAMA REGISTERED ARCHITECT
WALTER T. McKEE, JR.
NO. 3802
MONTGOMERY, ALA.

SHEET TITLE : HVAC EQUIPMENT SCREEN DETAILS

MCKEE JOB # : 23-195

DRAWN BY : VH

DATE: 10-11-2023

REVISED DATE:

REVISED DATE:

REVISED DATE:

SHEET NO. : A9.2

- Z:\2023\23-195 Additions to Robertsdale High School\CAD Drawings\Architectural\A9.2 HVAC Screen Details.dwg
- Thursday, October 19, 2023 10:36:31 AM

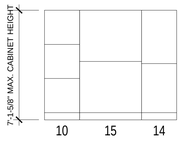

5 NORTH WALL
SCALE: 1/4"=1'-0"

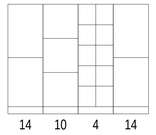

6 EAST WALL
SCALE: 1/4"=1'-0"

7 WEST WALL
SCALE: 1/4"=1'-0"

ROOM 851 PERCUSSION STORAGE

ROOM 851	
QTY.	DESCRIPTION
1	#04 CABINET
2	#10 CABINET
3	#14 CABINET
1	#15 CABINET
2	GEARBOSS SHELF ADD-ON BAY
1	GEARBOSS SHELF LOCK BOX
1	GEARBOSS SHELF STARTER BAY
15	GEARBOSS SHELF, 30 1/2"
26	TOTAL

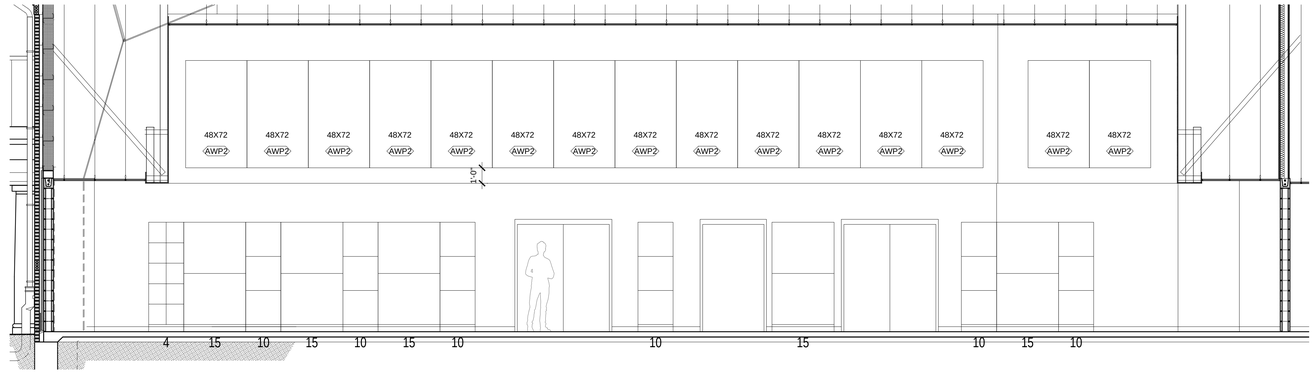

1 BAND ROOM INTERIOR ELEVATION - NORTH WALL
SCALE: 1/4"=1'-0"

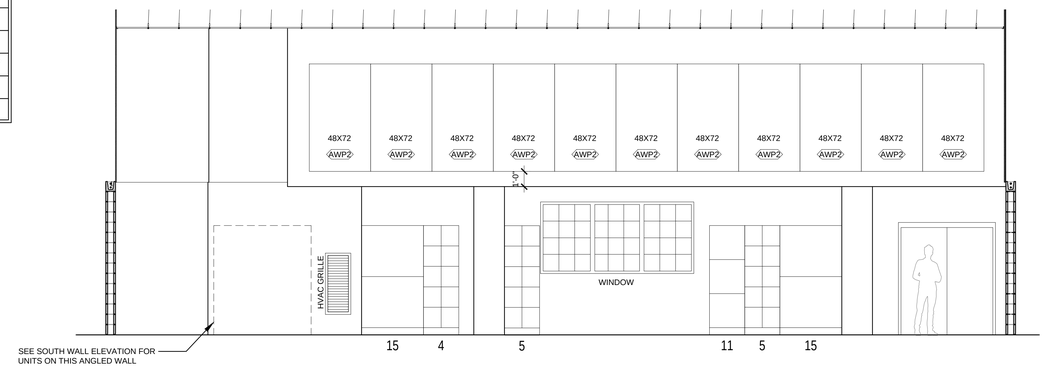

2 BAND ROOM INTERIOR ELEVATION - WEST WALL
SCALE: 1/4"=1'-0"

GENERAL NOTES :

1. SEE SPECIFICATIONS FOR PRODUCT MANUFACTURERS. PRODUCT NAMES AND NUMBERS ON THIS SHEET ARE FROM WENGER CORPORATION, SHOWN FOR CONVENIENCE TO CLARIFY THE PRODUCTS.
2. VERIFICATION OF BUILDING DIMENSIONS TO BE CONFIRMED BY GENERAL CONTRACTOR PRIOR TO CONSTRUCTION. PRODUCT IS PREFABRICATED IN STANDARD SIZES.
3. WALL AND FLOOR AREAS SHOWN FOR PRODUCT INSTALLATION MUST BE FREE OF OBSTRUCTIONS SUCH AS LIGHT SWITCHES, OUTLETS, HVAC, CLOCKS, SIGNS, ETC.
4. PROVIDE CLOSURE PANELS AS PER DRAWINGS. PROVIDE END COVER PANELS SHOWN AS PER DRAWING.

PROVIDE MANUFACTURERS STANDARD COLOR COMBINATIONS.

GENERAL CABINET NOTES:

1. CABINET DOORS SHALL HAVE LATCHES READY TO RECEIVE STANDARD PADLOCKS. PADLOCKS ARE N.I.C.

ACOUSTIC CABINET NOTES:

1. INSTRUMENT CABINETS SHALL HAVE WIRE GRILLE DOORS TO MINIMIZE CUBIC VOLUME LOSS AND REDUCE SOUND VIBRATION.
2. CABINET INTERIOR BACKS SHALL HAVE ACOUSTICALLY ABSORPTIVE MATERIAL.

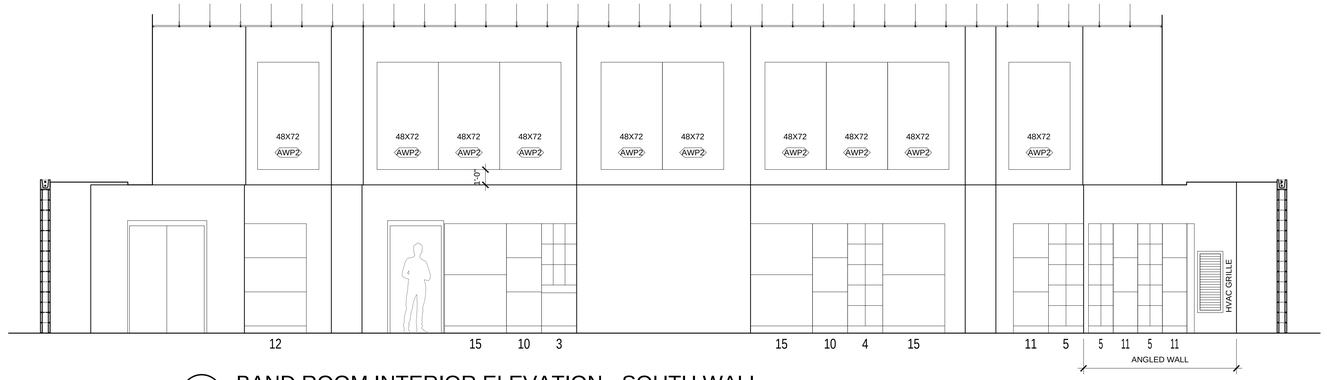

3 BAND ROOM INTERIOR ELEVATION - SOUTH WALL
SCALE: 1/4"=1'-0"

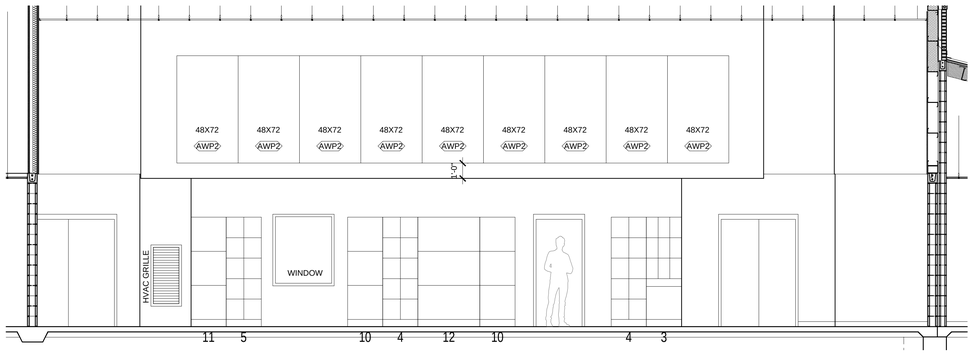

4 BAND ROOM INTERIOR ELEVATION - EAST WALL
SCALE: 1/4"=1'-0"

ACOUSTICAL WALL PANELS LEGEND	
SYMBOL	DESCRIPTION
48X72	INDICATES WALL PANEL SIZE IN INCHES
AWP2	ACOUSTICAL WALL PANEL TYPE

ROOM 848	
QTY.	DESCRIPTION
PLAN	#03 ACOUSTICABINET
PLAN	#04 ACOUSTICABINET
PLAN	#05 ACOUSTICABINET
PLAN	#10 ACOUSTICABINET
PLAN	#11 ACOUSTICABINET
PLAN	#12 ACOUSTICABINET
PLAN	#15 ACOUSTICABINET

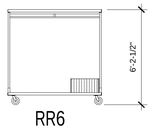

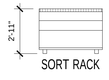

ROOM 849	
QTY.	DESCRIPTION
6	6 FT RACK N ROLL
1	MUSIC SORTING RACK
7	TOTAL

8 ROOM 849 UNIFORMS STORAGE
SCALE: 1/4"=1'-0"

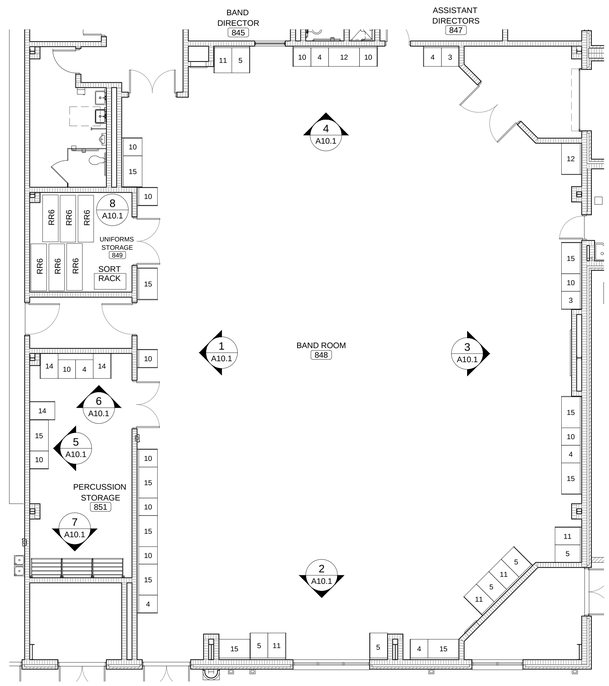

FLOOR PLAN - BAND ROOM AREA
SCALE: 1/8" = 1'-0"

ADDITIONS TO ROBERTSDALE HIGH SCHOOL

ROBERTSDALE, ALABAMA
FOR THE
BALDWIN COUNTY BOARD OF EDUCATION

McKEE & ASSOCIATES
ARCHITECTS, INC.
631 SOUTH HULL STREET , MONTGOMERY , ALABAMA 36104 (334) 834-9933

STATE OF ALABAMA REGISTERED ARCHITECT
WALTER T. McKEE, JR.
No. 1002
MONTGOMERY, ALA.

SHEET TITLE : BAND ROOM 848 - MUSIC CASEWORK & WALL PANELS

MCKEE JOB # : 23-195

DRAWN BY : VH

DATE: 10-11-2023

REVISED DATE:

REVISED DATE:

REVISED DATE:

SHEET NO. : A10.1

- Z:\2023\23-195 Additions to Robertsdale High School\CAD Drawings\Architectural\A10.1 Casework.dwg
- Thursday, October 19, 2023 10:37:05 AM

GENERAL NOTES :

1. SEE SPECIFICATIONS FOR PRODUCT MANUFACTURERS. PRODUCT NAMES AND NUMBERS ON THIS SHEET ARE FROM WENGER CORPORATION, SHOWN FOR CONVENIENCE TO CLARIFY THE PRODUCTS.
2. VERIFICATION OF BUILDING DIMENSIONS TO BE CONFIRMED BY GENERAL CONTRACTOR PRIOR TO CONSTRUCTION. PRODUCT IS PREFABRICATED IN STANDARD SIZES.
3. WALL AND FLOOR AREAS SHOWN FOR PRODUCT INSTALLATION MUST BE FREE OF OBSTRUCTIONS SUCH AS LIGHT SWITCHES, OUTLETS, HVAC, CLOCKS, SIGNS, ETC.
4. PROVIDE CLOSURE PANELS AS PER DRAWINGS. PROVIDE END COVER PANELS SHOWN AS PER DRAWING.

PROVIDE MANUFACTURER'S STANDARD COLOR COMBINATIONS.

GENERAL CABINET NOTES:

1. CABINET DOORS SHALL HAVE LATCHES READY TO RECEIVE STANDARD PADLOCKS. PADLOCKS ARE N.I.C.

ACOUSTIC CABINET NOTES:

1. INSTRUMENT CABINETS SHALL HAVE WIRE GRILLE DOORS TO MINIMIZE CUBIC VOLUME LOSS AND REDUCE SOUND VIBRATION.
2. CABINET INTERIOR BACKS SHALL HAVE ACOUSTICALLY ABSORPTIVE MATERIAL.

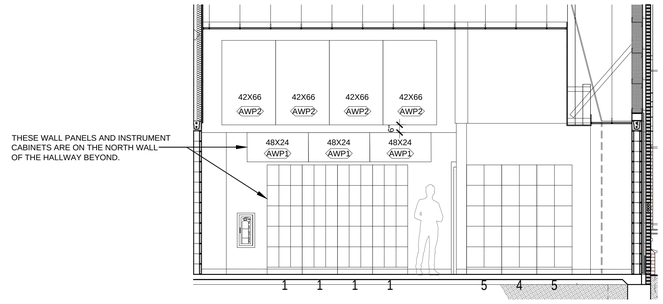

ROOM 846	
QTY.	DESCRIPTION
PLAN	#01 ACOUSTICABINET
PLAN	#03 ACOUSTICABINET
PLAN	#04 ACOUSTICABINET
PLAN	#05 ACOUSTICABINET
PLAN	#10 ACOUSTICABINET
PLAN	#11 ACOUSTICABINET
PLAN	#15 ACOUSTICABINET

11 ENSEMBLE REHEARSAL INTERIOR ELEVATION - NORTH WALLS
SCALE: 1/4"=1'-0"

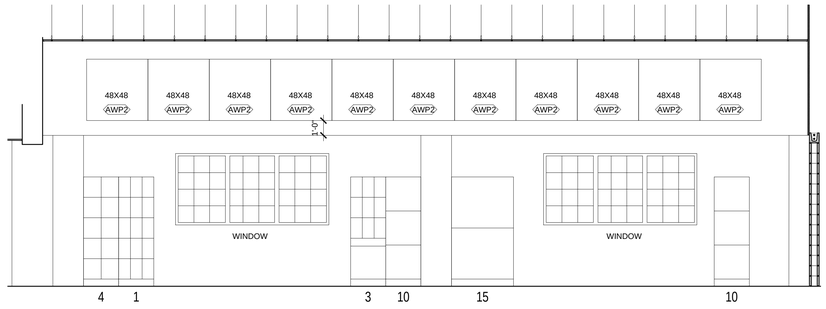

12 ENSEMBLE REHEARSAL INTERIOR ELEVATION - EAST WALL
SCALE: 1/4"=1'-0"

7 SHELF
(7 UNIT)

7 SHELF-OV
(3 UNIT)

15 EAST WALL
SCALE: 1/4"=1'-0"

16 WEST WALL
SCALE: 1/4"=1'-0"

ROOM 841 SHEET MUSIC CLOSET

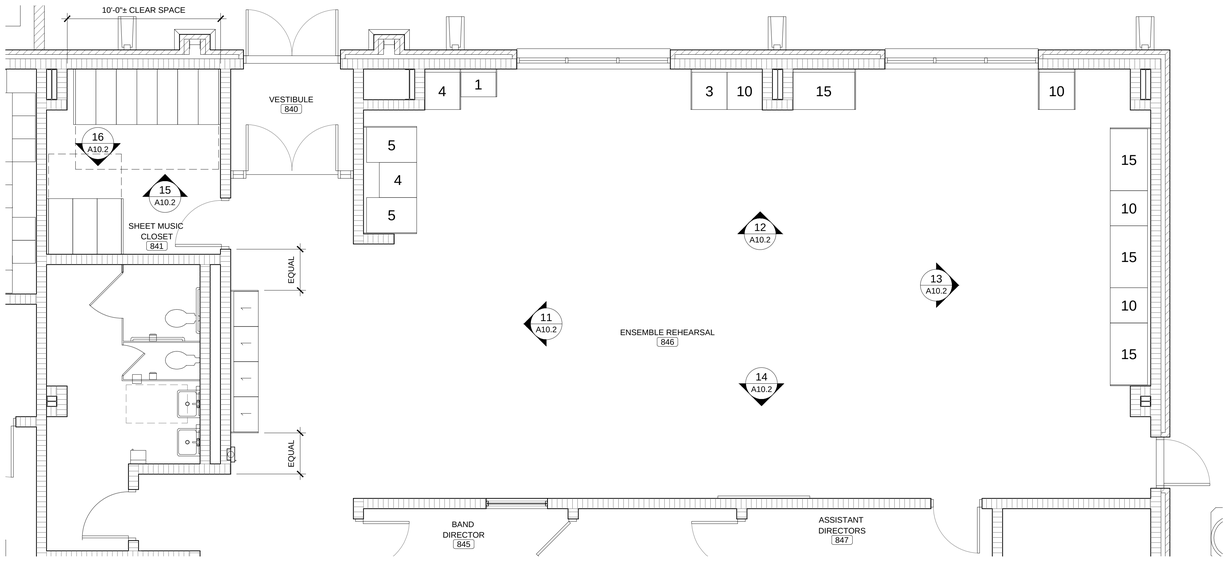

FLOOR PLAN - ENSEMBLE REHEARSAL AREA
SCALE: 1/4" = 1'-0"

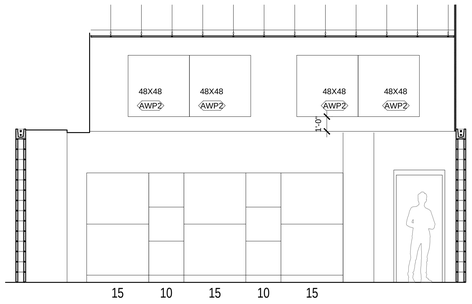

13 ENSEMBLE REHEARSAL INTERIOR ELEVATION - SOUTH WALL
SCALE: 1/4"=1'-0"

ACOUSTICAL WALL PANELS LEGEND	
SYMBOL	DESCRIPTION
AWP1	ACOUSTICAL WALL PANEL TYPE (HIGH IMPACT)
AWP2	ACOUSTICAL WALL PANEL TYPE
48X48	INDICATES WALL PANEL SIZE IN INCHES

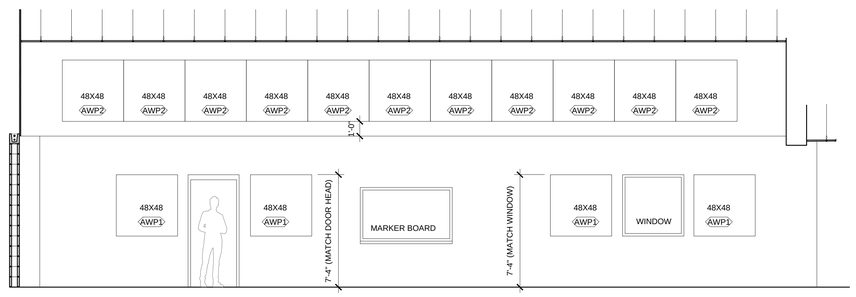

14 ENSEMBLE REHEARSAL INTERIOR ELEVATION - WEST WALL
SCALE: 1/4"=1'-0"

ADDITIONS
TO
ROBERTSDALE HIGH SCHOOL
ROBERTSDALE, ALABAMA
FOR THE
BALDWIN COUNTY BOARD OF EDUCATION

McKEE & ASSOCIATES
ARCHITECTS, INC.
631 SOUTH HULL STREET, MONTGOMERY, ALABAMA 36104 (334) 834-9833
STATE OF ALABAMA REGISTERED ARCHITECT WALTER T. McKEE, JR. NO. 1082 MONTGOMERY, ALA.

SHEET TITLE : REHEARSAL 846 - MUSIC CASEWORK & WALL PANELS

MCKEE JOB # : 23-195

DRAWN BY : VH

DATE: 10-11-2023

REVISED DATE:

REVISED DATE:

REVISED DATE:

SHEET NO. : A10.2

- Z:\2023\23-195 Additions to Robertsdale High School\CAD Drawings\Architectural\A10.1 Casework.dwg
- Thursday, October 19, 2023 10:36:53 AM

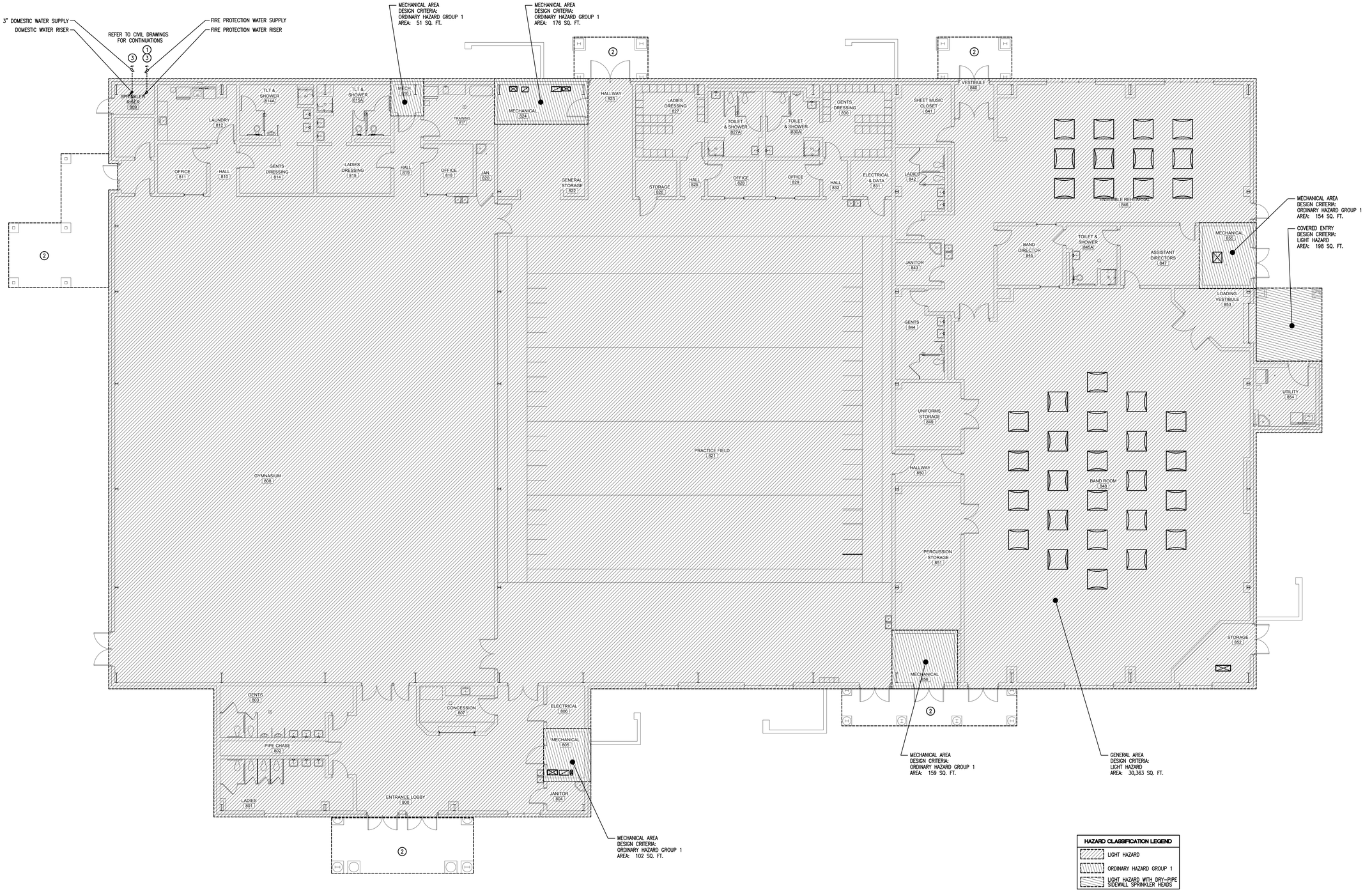

FIRE SUPPRESSION PLAN
SCALE: 1/8" = 1'-0"

HAZARD CLASSIFICATION LEGEND
LIGHT HAZARD
ORDINARY HAZARD GROUP 1
LIGHT HAZARD WITH DRY-PIPE SIDEWALL SPRINKLER HEADS

FIRE SUPPRESSION KEYNOTES:

1. FIRE SUPPRESSION WATER SUPPLY LINE SHALL BE PRESSURE TESTED AND WITNESSED BY AN ALABAMA BUILDING COMMISSION OFFICIAL PRIOR TO CONNECTION OF RISERS.
2. NON-COMBUSTIBLE CANOPY CONSTRUCTION FOR PEDESTRIAN TRAFFIC ONLY. FIRE SUPPRESSION NOT REQUIRED.
3. PIPING TO BE CONTINUED FROM BACKFLOW PREVENTER.

ADDITIONS TO ROBERTSDALE HIGH SCHOOL
ROBERTSDALE, ALABAMA
FOR THE
BALDWIN COUNTY BOARD OF EDUCATION

McKEE and ASSOCIATES
ARCHITECTS, INC.
631 SOUTH HULL STREET, MONTGOMERY, ALABAMA 36104 (334) 834-9933

ALABAMA LICENSED No. 14948 PROFESSIONAL ENGINEER
10/11/23

SHEET TITLE : FIRE SUPPRESSION PLAN

MCKEE JOB # : 23-195

DRAWN BY : D. B.

DATE: 10.11.2023

REVISED DATE:

REVISED DATE:

REVISED DATE:

SHEET NO. : FP1.1

H.M. YONGE & ASSOCIATES, INC.
CONSULTING ENGINEERS // EST. 1988
51 EAST GREGORY STREET
PENSACOLA, FLORIDA 32502
PHONE: (850)434-2661
253 ST. ANTHONY STREET
MOBILE, ALABAMA 36603
PHONE: (251)690-7446

- I:\Up to date 2023 drawings\23108 - Robertsdale CRIT_HMY dwgs\23108FP11 FIRE SUPPRESSION PLAN.dwg
- 4 October, 2023 05:49:09 AM

Don@ I:\Up to date 2023 drawings\23108 - Robertsdale CRIT_HMY dwgs\23108FP11 FIRE SUPPRESSION PLAN.dwg 04 OCTOBER 2023 0549

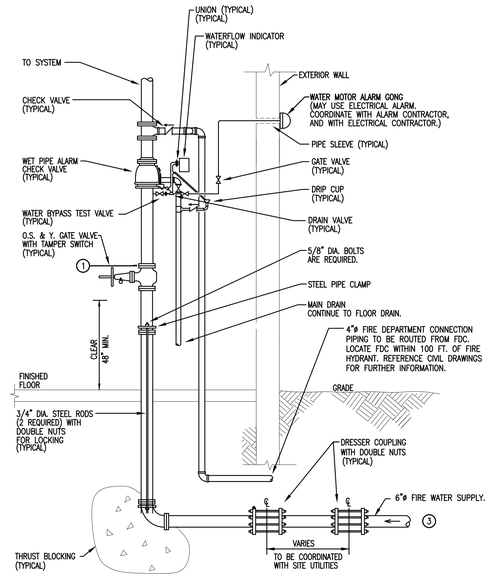

WET PIPE FIRE RISER DETAIL

NOT TO SCALE

FIRE SUPPRESSION KEYNOTES:

1. FIRE SUPPRESSION WATER SUPPLY LINE SHALL BE PRESSURE TESTED AND WITNESSED BY AN ALABAMA BUILDING COMMISSION OFFICIAL PRIOR TO CONNECTION OF RISERS.
2. COVERED AWNING TO BE PROTECTED WITH SIDE-WALL MOUNTED WET-PIPE SPRINKLER HEADS.
3. PIPING TO BE CONTINUED FROM BACKFLOW PREVENTER.

SYSTEM DESIGN APPROACH CRITERIA

ORDINARY HAZARD GROUP I – WET PIPE FIRE SPRINKLER SYSTEM WITH A DENSITY OF .15 GPM OVER A MINIMUM REMOTE AREA OF 1500 SQUARE FEET WITH A HOSE STREAM ALLOWANCE OF 250 GPM AND 130 SQUARE FEET OF COVERAGE PER SPRINKLER HEAD MAXIMUM.

LIGHT HAZARD – WET PIPE FIRE SPRINKLER SYSTEM WITH A DENSITY OF .10 GPM OVER A MINIMUM REMOTE AREA OF 1500 SQUARE FEET WITH A HOSE STREAM ALLOWANCE OF 100 GPM AND 225 SQUARE FEET OF COVERAGE PER SPRINKLER HEAD MAXIMUM. AN ADDITIONAL FLOW SHALL BE REQUIRED FOR THE DRY PIPE SYSTEM PER NFPA-13.

DESIGN OF UNDERGROUND FIRE MAIN PIPING SHALL BE PER NFPA-24. SPRINKLER DESIGN SHALL BE IN

WATER FLOW DATA

THE CONTRACTOR SHALL CONDUCT A HYDRANT FLOW TEST AT POINT OF CONNECTION TO OBTAIN CURRENT FLOW CONDITIONS FOR THE SPRINKLER SYSTEM HYDRAULIC CALCULATIONS. THE TEST HYDRANT SHALL BE THE ONE CLOSEST TO THE BLDG. THIS HYDRANT WILL SUPPLY THE STATIC AND RESIDUAL PRESSURES.

(MIC) MICROBIAL INDUCED CORROSION IS NOT EXPECTED.

STATIC PRESSURE:	54 PSI
RESIDUAL PRESSURE:	24 PSI
WATER FLOW:	700 GPM

PRESSURE HYDRANT – 296
FLOW HYDRANT – 298
CALCULATED FLOW @ 20 PSI = 749 GPM
DATA FROM TEST CONDUCTED ON 10 January 2018 @ 0600

FIRE SUPPRESSION GENERAL NOTES:

1. COORDINATE INSTALLATION OF FIRE ZONE RISERS WITH MECHANICAL AND PLUMBING CONTRACTORS TO ENSURE ADEQUATE SPACE FOR INSTALLATION.
2. SEE NFPA 13 – 2-8.2 FOR CONNECTIONS PASSING THROUGH OR UNDER FOUNDATION WALLS.
3. COORDINATE PIPE ROUTING WITH ARCHITECTURAL AND STRUCTURAL DRAWINGS TO INSURE ADEQUATE SPACE IS AVAILABLE.
4. REFERENCE FLOW TEST DATA AND EVALUATE WHETHER STRATEGIC UPSIZING OF LINES CAN PROVIDE SUFFICIENT WATER FLOW AND PRESSURE.
5. FOR CLARITY NOT ALL PIPING TURNS ARE SHOWN IN DETAIL.
6. FIRE SUPPRESSION WATER SUPPLY LINE SHALL BE FLOWED AND WITNESSED PRIOR TO CONNECTION OF RISER.

HAZARD CLASSIFICATION LEGEND
LIGHT HAZARD
ORDINARY HAZARD GROUP 1
LIGHT HAZARD WITH DRY-PIPE SIDEWALL SPRINKLER HEADS

ADDITIONS
TO
ROBERTSDALE HIGH SCHOOL
ROBERTSDALE, ALABAMA
FOR THE
BALDWIN COUNTY BOARD OF EDUCATION

McKEE and ASSOCIATES
ARCHITECTS, INC.
631 SOUTH HULL STREET, MONTGOMERY, ALABAMA 36104 (334) 834-9933

ALABAMA LICENSED No. 14948 PROFESSIONAL ENGINEER
10/11/23

SHEET TITLE : FIRE SUPPRESSION DETAILS

MCKEE JOB # : 23-195

DRAWN BY : D. B.

DATE: 10.11.2023

REVISED DATE:

REVISED DATE:

REVISED DATE:

H.M. YONGE & ASSOCIATES, INC.
CONSULTING ENGINEERS // EST. 1988
51 EAST GREGORY STREET
PENSACOLA, FLORIDA 32502
PHONE: (850)434-2661
253 ST. ANTHONY STREET
MOBILE, ALABAMA 36603
PHONE: (251)690-7446

SHEET NO. : FP1.2

- I:\Up to date 2023 drawings\23108 - Robertsdale CRIT_HMY dwgs\23108 FP1.2.dwg
- 4 October, 2023 05:51:13 AM

DonB. I:\Up to date 2023 drawings\23108 – Robertsdale CRIT_HMY dwgs\23108 FP1.2.dwg 04 OCTOBER 2023 0543

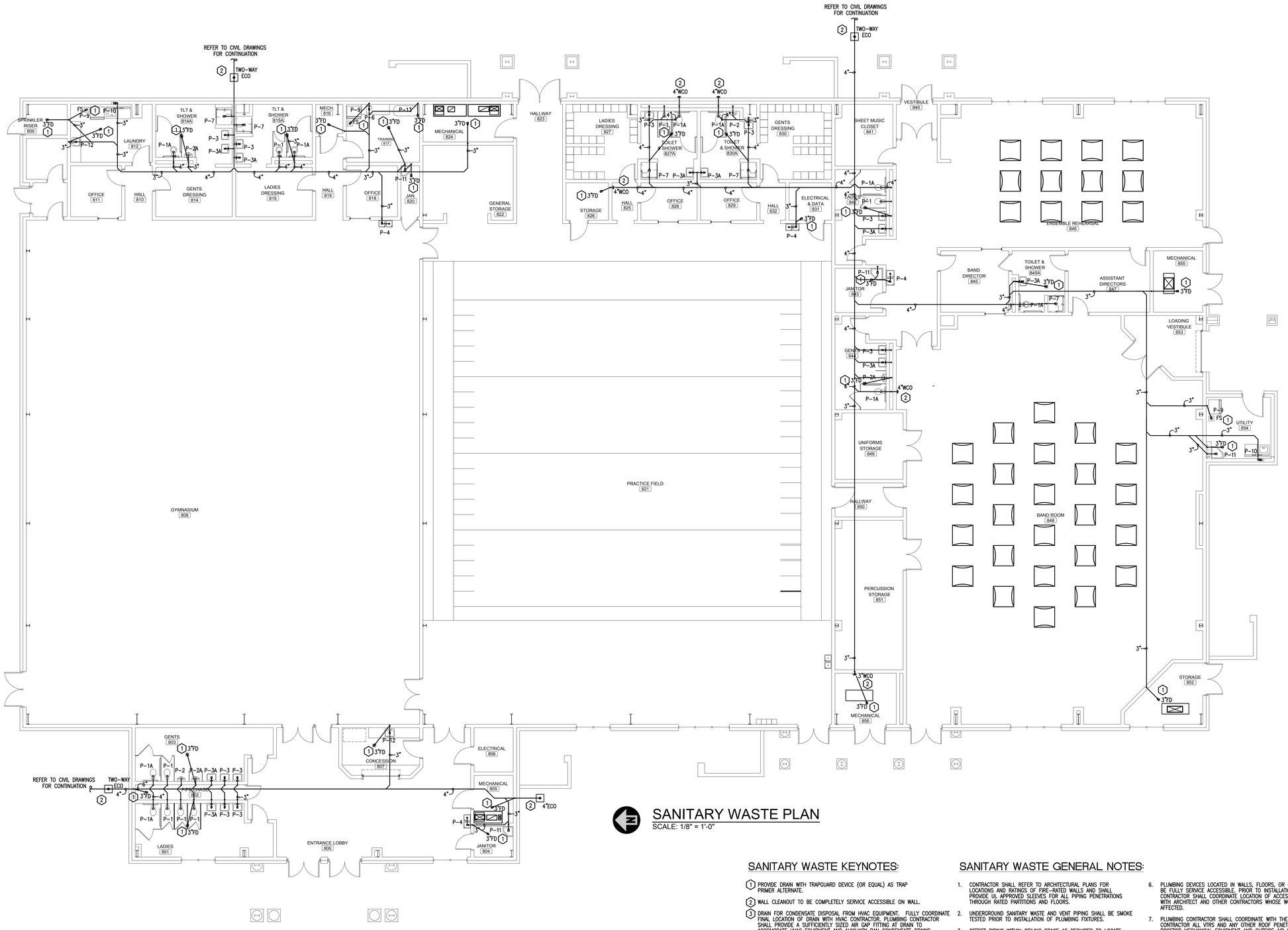

SANITARY WASTE PLAN

SCALE: 1/8" = 1'-0"

SANITARY WASTE KEYNOTES:

1. PROVIDE DRAIN WITH TRAPGUARD DEVICE (OR EQUAL) AS TRAP PRIMER ALTERNATE.
2. WALL CLEANOUT TO BE COMPLETELY SERVICE ACCESSIBLE ON WALL.
3. DRAIN FOR CONDENSATE DISPOSAL FROM HVAC EQUIPMENT. FULLY COORDINATE FINAL LOCATION OF DRAIN WITH HVAC CONTRACTOR. PLUMBING CONTRACTOR SHALL PROVIDE A SUFFICIENTLY SIZED AIR GAP FITTING AT DRAIN TO ACCOMODATE HVAC EQUIPMENT AND AUXILIARY PAN CONDENSATE DRAINS.
4. FINAL LOCATION OF DRAIN TO BE ADJUSTED AS NECESSARY TO BE FULLY FUNCTIONAL AND ACCESSIBLE. COORDINATE WITH EQUIPMENT SUPPLIER(S) AS NECESSARY.

SANITARY WASTE GENERAL NOTES:

1. CONTRACTOR SHALL REFER TO ARCHITECTURAL PLANS FOR LOCATIONS AND RATINGS OF FIRE-RATED WALLS AND SHALL PROVIDE UL APPROVED SLEEVES FOR ALL PIPING PENETRATIONS THROUGH RATED PARTITIONS AND FLOORS.
2. UNDERGROUND SANITARY WASTE AND VENT PIPING SHALL BE SMOKE TESTED PRIOR TO INSTALLATION OF PLUMBING FIXTURES.
3. OFFSET PIPING WITHIN CEILING SPACE AS REQUIRED TO LOCATE PIPE RISERS AND DROPS WITHIN WALLS AS SHOWN ON PLANS.
4. PROVIDE ALL FLOOR DRAINS, FLOOR SINKS, AND TRENCH DRAINS WITH TRAP PRIMER PIPING FROM A SELF-CONTAINED TRAP PRIMER DISTRIBUTION UNIT WITH 1/2" ISOLATION VALVE. MAXIMUM OF FOUR FIXTURES PER TRAP PRIMER UNIT. UNIT TO BE MOUNTED PER MANUFACTURER'S RECOMMENDATIONS.
5. ALL HORIZONTAL PORTIONS OF THE SANITARY WASTE PIPING SERVING FOR CONDENSATE DISPOSAL SHALL BE INSULATED WITH 1" THICK SECTIONAL FIBERGLASS INSULATION WITH AN "ASJ" JACKET. INSULATION SHALL BE INSTALLED PER MANUFACTURER'S RECOMMENDATIONS. CONDENSATE DRAIN TRAP SHALL ALSO BE INSULATED.
6. PLUMBING DEVICES LOCATED IN WALLS, FLOORS, OR CEILINGS MUST BE FULLY SERVICE ACCESSIBLE. PRIOR TO INSTALLATION, PLUMBING CONTRACTOR SHALL COORDINATE LOCATION OF ACCESS PANELS WITH ARCHITECT AND OTHER CONTRACTORS WHOSE WORK MAY BE AFFECTED.
7. PLUMBING CONTRACTOR SHALL COORDINATE WITH THE MECHANICAL CONTRACTOR ALL VTRS AND ANY OTHER *ROOF* PENETRATIONS WITH ROOFTOP MECHANICAL EQUIPMENT AND OUTSIDE AIR INTAKES. A MINIMUM DISTANCE OF 12 FEET SHALL BE MAINTAINED BETWEEN ALL OUTSIDE AIR INTAKES AND VTRS PER 2021 IMC.
8. ALL PIPING PENETRATIONS OF FIRE-RATED BARRIERS SHALL BE SUFFICIENTLY PROTECTED TO MEET CURRENT CODE.
9. REFER TO SANITARY WASTE RISER DIAGRAM FOR SANITARY VENT SYSTEM ROUTING AND SIZING.

H.M. YONGE & ASSOCIATES, INC.
CONSULTING ENGINEERS // EST. 1988
51 EAST GREGORY STREET
PENSACOLA, FLORIDA 32502
PHONE: (850)434-2661
253 ST. ANTHONY STREET
MOBILE, ALABAMA 36603
PHONE: (251)690-7446

ADDITIONS TO ROBERTSDALE HIGH SCHOOL

ROBERTSDALE, ALABAMA

FOR THE

BALDWIN COUNTY BOARD OF EDUCATION

McKEE and ASSOCIATES
ARCHITECTS, INC.
631 SOUTH HULL STREET, MONTGOMERY, ALABAMA 36104 (334) 834-9933

ALABAMA LICENSED No. 14946 PROFESSIONAL ENGINEER — 10/11/23

SHEET TITLE :	SANITARY WASTE PLAN
MCKEE JOB # :	23-195
DRAWN BY :	D. B.
DATE:	10.11.2023
REVISED DATE:	
REVISED DATE:	
REVISED DATE:	

SHEET NO. : P1.1

- I:\Up to date 2023 drawings\23108 - Robertsdale CRIT_HMY dwgs\23108P11 SANITARY WASTE PLAN.dwg
- 4 October, 2023 05:52:18 AM

DonB. I:\Up to date 2023 drawings\23108 - Robertsdale CRIT_HMY dwgs\23108P11 SANITARY WASTE PLAN.dwg 04 OCTOBER 2023 0515

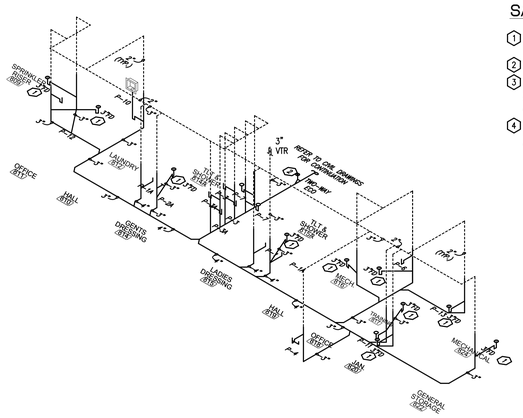

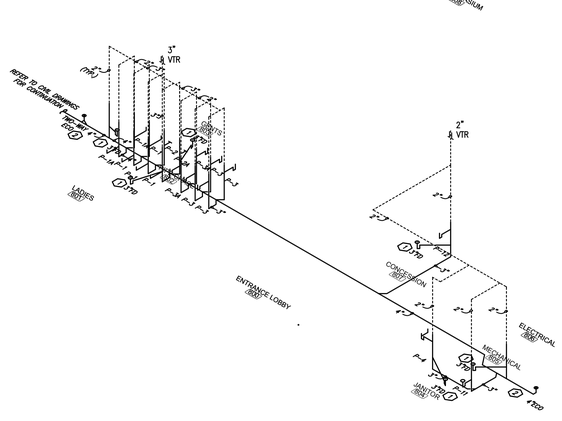

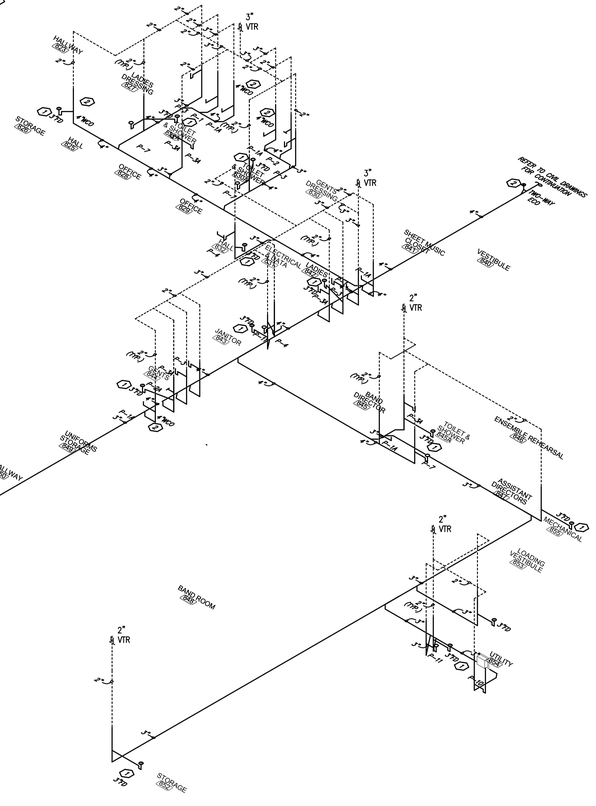

SANITARY WASTE KEYNOTES:

1. PROVIDE DRAIN WITH TRAPGUARD DEVICE (OR EQUAL) AS TRAP PRIMER ALTERNATE.
2. WALL CLEANOUT TO BE COMPLETELY SERVICE ACCESSIBLE ON WALL.
3. DRAIN FOR CONDENSATE DISPOSAL FROM HVAC EQUIPMENT. FULLY COORDINATE FINAL LOCATION OF DRAIN WITH HVAC CONTRACTOR. PLUMBING CONTRACTOR SHALL PROVIDE A SUFFICIENTLY SIZED AIR GAP FITTING AT DRAIN TO ACCOMODATE HVAC EQUIPMENT AND AUXILIARY PAN CONDENSATE DRAINS.
4. FINAL LOCATION OF DRAIN TO BE ADJUSTED AS NECESSARY TO BE FULLY FUNCTIONAL AND ACCESSIBLE. COORDINATE WITH EQUIPMENT SUPPLIER(S) AS NECESSARY.

SANITARY WASTE GENERAL NOTES:

1. CONTRACTOR SHALL REFER TO ARCHITECTURAL PLANS FOR LOCATIONS AND RATINGS OF FIRE-RATED WALLS AND SHALL PROVIDE UL APPROVED SLEEVES FOR ALL PIPING PENETRATIONS THROUGH RATED PARTITIONS AND FLOORS.
2. UNDERGROUND SANITARY WASTE AND VENT PIPING SHALL BE SMOKE TESTED PRIOR TO INSTALLATION OF PLUMBING FIXTURES.
3. OFFSET PIPING WITHIN CEILING SPACE AS REQUIRED TO LOCATE PIPE RISERS AND DROPS WITHIN WALLS AS SHOWN ON PLANS.
4. PROVIDE ALL FLOOR DRAINS, FLOOR SINKS, AND TRENCH DRAINS WITH TRAP PRIMER PIPING FROM A SELF-CONTAINED TRAP PRIMER DISTRIBUTION UNIT WITH 1/2" ISOLATION VALVE. MAXIMUM OF FOUR FIXTURES PER TRAP PRIMER UNIT. UNIT TO BE MOUNTED PER MANUFACTURER'S RECOMMENDATIONS.
5. ALL HORIZONTAL PORTIONS OF THE SANITARY WASTE PIPING SERVING FOR CONDENSATE DISPOSAL SHALL BE INSULATED WITH 1" THICK SECTIONAL FIBERGLASS INSULATION WITH AN "ASJ" JACKET. INSULATION SHALL BE INSTALLED PER MANUFACTURER'S RECOMMENDATIONS. CONDENSATE DRAIN TRAP SHALL ALSO BE INSULATED.
6. PLUMBING DEVICES LOCATED IN WALLS, FLOORS, OR CEILINGS MUST BE FULLY SERVICE ACCESSIBLE. PRIOR TO INSTALLATION, PLUMBING CONTRACTOR SHALL COORDINATE LOCATION OF ACCESS PANELS WITH ARCHITECT AND OTHER CONTRACTORS WHOSE WORK MAY BE AFFECTED.
7. PLUMBING CONTRACTOR SHALL COORDINATE WITH THE MECHANICAL CONTRACTOR ALL VTRS AND ANY OTHER ROOF PENETRATIONS WITH ROOFTOP MECHANICAL EQUIPMENT AND OUTSIDE AIR INTAKES. A MINIMUM DISTANCE OF 12 FEET SHALL BE MAINTAINED BETWEEN ALL OUTSIDE AIR INTAKES AND VTRS PER 2021 IMC.
8. ALL PIPING PENETRATIONS OF FIRE-RATED BARRIERS SHALL BE SUFFICIENTLY PROTECTED TO MEET CURRENT CODE.
9. REFER TO SANITARY WASTE RISER DIAGRAM FOR SANITARY VENT SYSTEM ROUTING AND SIZING.

SANITARY WASTE RISER DIAGRAM
SCALE: NONE

ADDITIONS
TO
ROBERTSDALE HIGH SCHOOL
ROBERTSDALE, ALABAMA
FOR THE
BALDWIN COUNTY BOARD OF EDUCATION

McKEE and ASSOCIATES
ARCHITECTS, INC.
631 SOUTH HULL STREET, MONTGOMERY, ALABAMA 36104 (334) 834-9933

ALABAMA LICENSED PROFESSIONAL ENGINEER No. 14946 MECHANICAL
10/11/23

SHEET TITLE : SANITARY WASTE RISER DIAGRAM

MCKEE JOB # : 23-195

DRAWN BY : D. B.

DATE: 10.11.2023

REVISED DATE:

REVISED DATE:

REVISED DATE:

SHEET NO. : P1.2

H.M. YONGE & ASSOCIATES, INC.
CONSULTING ENGINEERS // EST. 1988
51 EAST GREGORY STREET
PENSACOLA, FLORIDA 32502
PHONE: (850)434-2661
253 ST. ANTHONY STREET
MOBILE, ALABAMA 36603
PHONE: (251)690-7446

DonB. I:\Up to date 2023 drawings\23108 - Robertsdale CRIT_HMY dwgs\23108 P1.2.dwg 04 OCTOBER 2023 0521
- I:\Up to date 2023 drawings\23108 - Robertsdale CRIT_HMY dwgs\23108 P1.2.dwg
- 4 October, 2023 05:53:52 AM

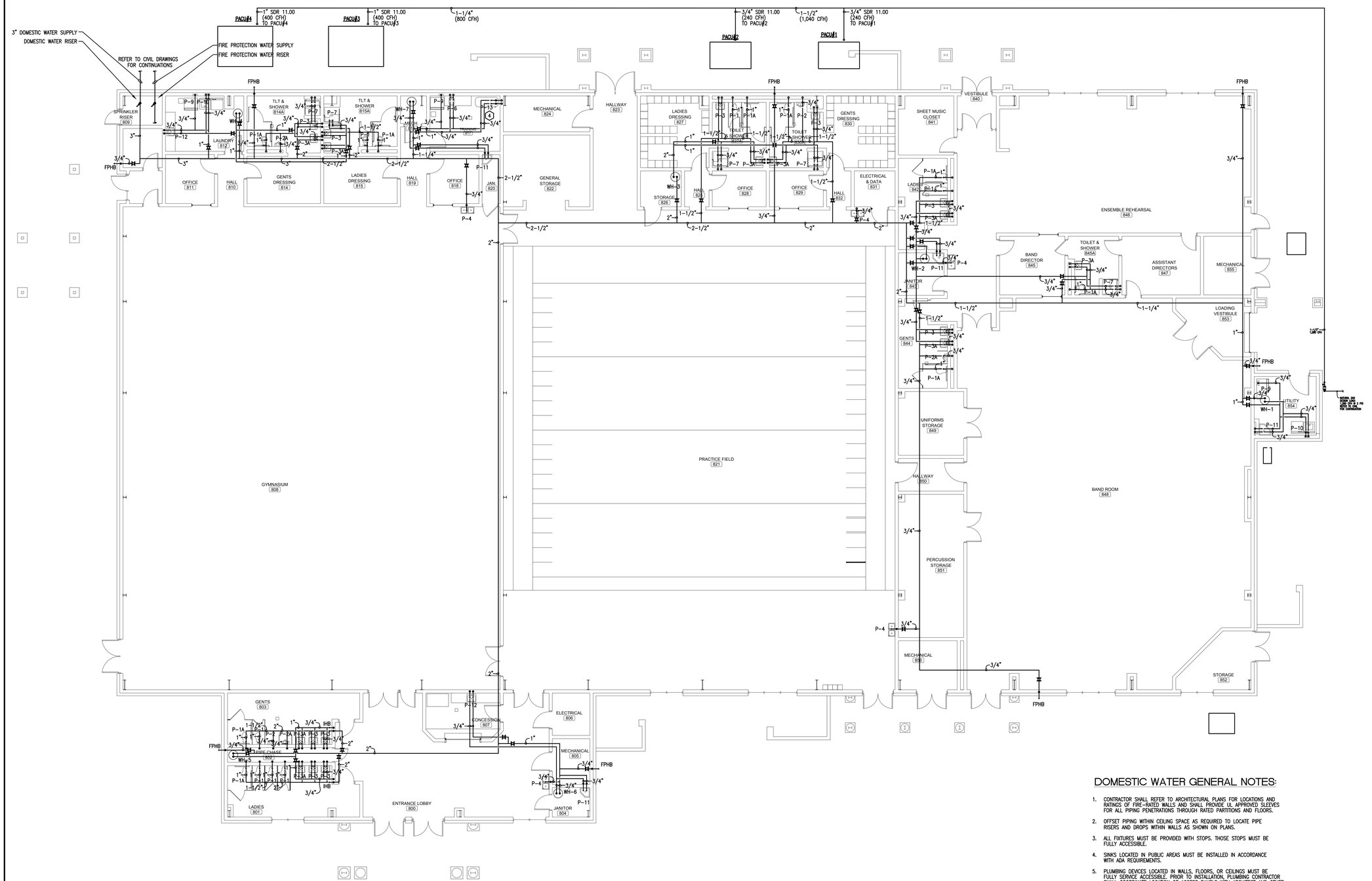

DOMESTIC WATER PLAN
SCALE: 1/8" = 1'-0"

DOMESTIC WATER GENERAL NOTES:

1. CONTRACTOR SHALL REFER TO ARCHITECTURAL PLANS FOR LOCATIONS AND RATINGS OF FIRE-RATED WALLS AND SHALL PROVIDE UL APPROVED SLEEVES FOR ALL PIPING PENETRATIONS THROUGH RATED PARTITIONS AND FLOORS.
2. OFFSET PIPING WITHIN CEILING SPACE AS REQUIRED TO LOCATE PIPE RISERS AND DROPS WITHIN WALLS AS SHOWN ON PLANS.
3. ALL FIXTURES MUST BE PROVIDED WITH STOPS. THOSE STOPS MUST BE FULLY ACCESSIBLE.
4. SINKS LOCATED IN PUBLIC AREAS MUST BE INSTALLED IN ACCORDANCE WITH ADA REQUIREMENTS.
5. PLUMBING DEVICES LOCATED IN WALLS, FLOORS, OR CEILINGS MUST BE FULLY SERVICE ACCESSIBLE. PRIOR TO INSTALLATION, PLUMBING CONTRACTOR SHALL COORDINATE LOCATION OF ACCESS PANELS WITH ARCHITECT AND OTHER CONTRACTORS WHOSE WORK MAY BE AFFECTED.
6. PLUMBING CONTRACTOR SHALL COORDINATE WITH THE MECHANICAL CONTRACTOR ALL VTR'S AND ANY OTHER ROOF PENETRATIONS WITH ROOFTOP MECHANICAL EQUIPMENT AND OUTSIDE AIR INTAKES. A MINIMUM DISTANCE OF 12 FEET SHALL BE MAINTAINED BETWEEN ALL OUTSIDE AIR INTAKES AND VTR'S PER 2021 IMC.
7. ALL PIPING PENETRATIONS OF FIRE-RATED BARRIERS SHALL BE SUFFICIENTLY PROTECTED TO MEET CURRENT CODE.
8. PLUMBING CONTRACTOR SHALL FULLY COORDINATE PIPE ROUTING WITH MECHANICAL CONTRACTOR TO ENSURE EFFICIENT UTILIZATION OF AVAILABLE SPACE. DUCT ROUTING SHALL HAVE PRIORITY OVER PRESSURIZED-PIPE ROUTING.

ADDITIONS
TO
ROBERTSDALE HIGH SCHOOL
ROBERTSDALE, ALABAMA
FOR THE
BALDWIN COUNTY BOARD OF EDUCATION

McKEE and ASSOCIATES
ARCHITECTS, INC.
631 SOUTH HULL STREET, MONTGOMERY, ALABAMA 36104 (334) 834-9933

10/11/23

SHEET TITLE : DOMESTIC WATER PLAN

MCKEE JOB # : 23-195

DRAWN BY : D. B.

DATE: 10.11.2023

REVISED DATE:

REVISED DATE:

REVISED DATE:

H.M. YONGE & ASSOCIATES, INC.
CONSULTING ENGINEERS // EST. 1988
51 EAST GREGORY STREET
PENSACOLA, FLORIDA 32502
PHONE: (850)434-2661
253 ST. ANTHONY STREET
MOBILE, ALABAMA 36603
PHONE: (251)690-7446

SHEET NO. : P2.1

- I:\Up to date 2023 drawings\23108 - Robertsdale CRIT_HMY dwgs\23108P21 DOMESTIC WATER PLAN.dwg
- 4 October, 2023 05:55:12 AM

DonB: I:\Up to date 2023 drawings\23108 - Robertsdale CRIT_HMY dwgs\23108P21 DOMESTIC WATER PLAN.dwg 04 OCTOBER 2023 0510

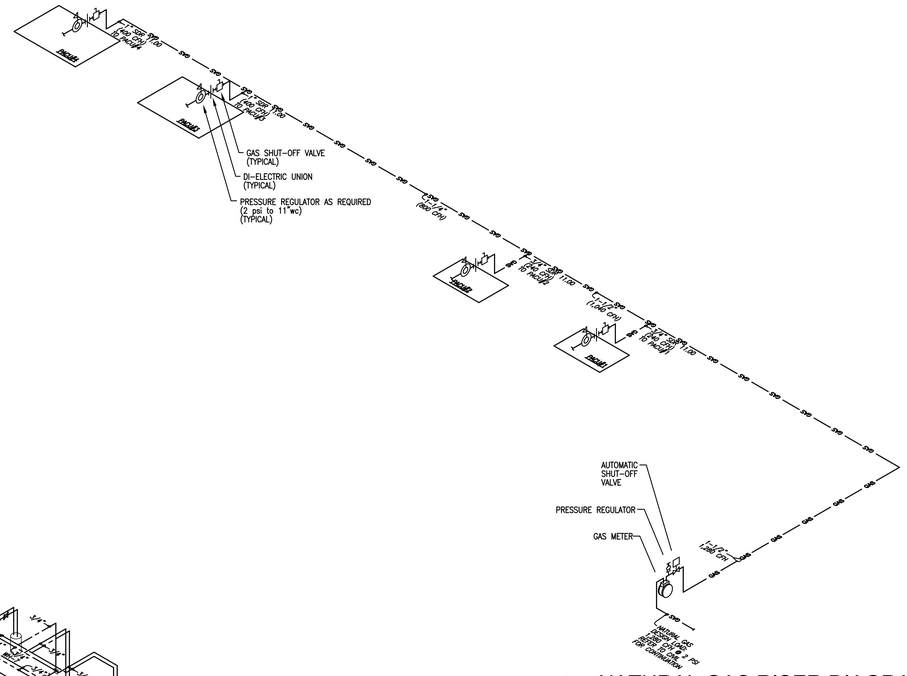

NATURAL GAS RISER DIAGRAM
SCALE: NONE

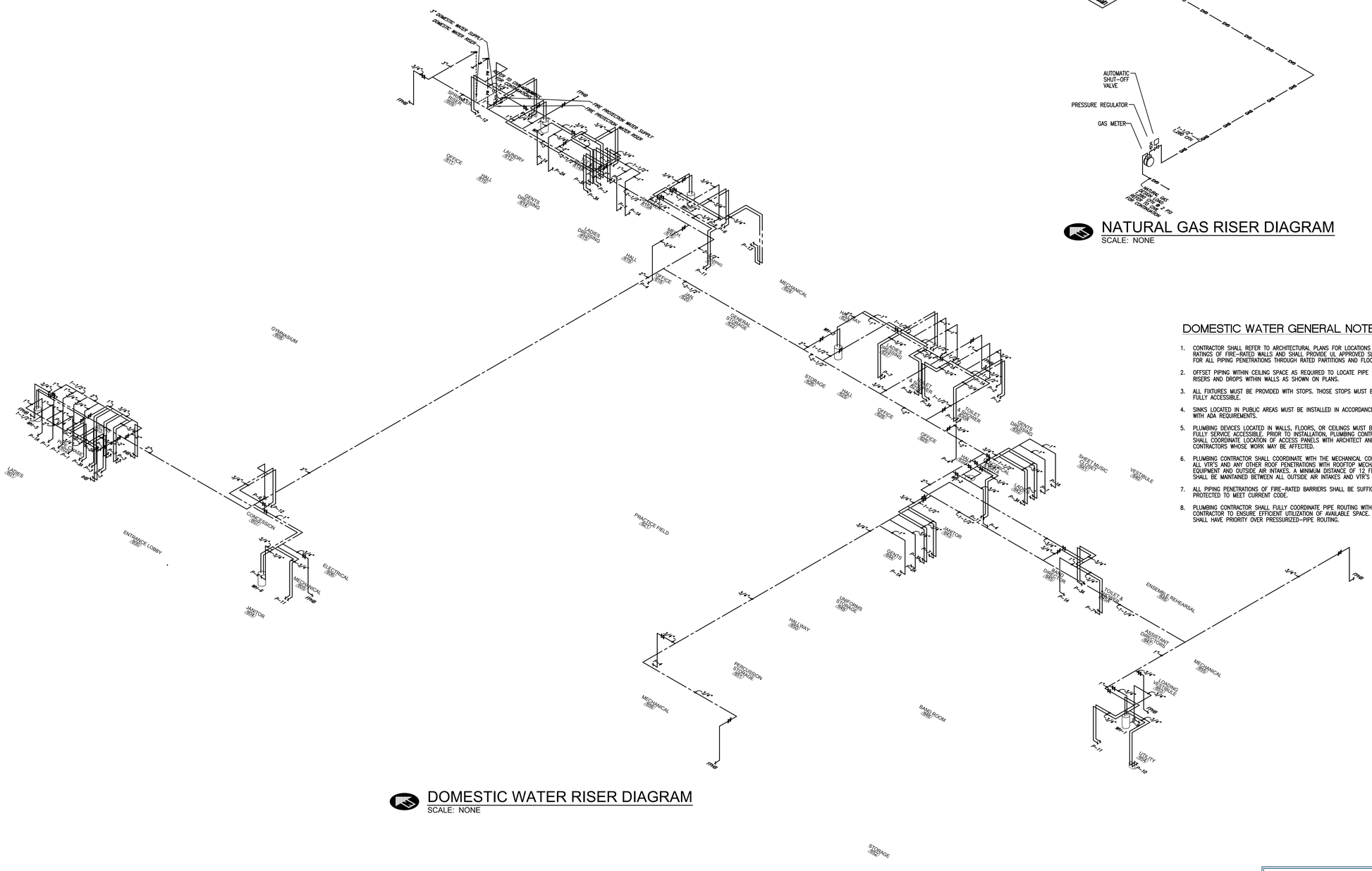

DOMESTIC WATER RISER DIAGRAM
SCALE: NONE

DOMESTIC WATER GENERAL NOTES:

1. CONTRACTOR SHALL REFER TO ARCHITECTURAL PLANS FOR LOCATIONS AND RATINGS OF FIRE-RATED WALLS AND SHALL PROVIDE UL APPROVED SLEEVES FOR ALL PIPING PENETRATIONS THROUGH RATED PARTITIONS AND FLOORS.
2. OFFSET PIPING WITHIN CEILING SPACE AS REQUIRED TO LOCATE PIPE RISERS AND DROPS WITHIN WALLS AS SHOWN ON PLANS.
3. ALL FIXTURES MUST BE PROVIDED WITH STOPS. THOSE STOPS MUST BE FULLY ACCESSIBLE.
4. SINKS LOCATED IN PUBLIC AREAS MUST BE INSTALLED IN ACCORDANCE WITH ADA REQUIREMENTS.
5. PLUMBING DEVICES LOCATED IN WALLS, FLOORS, OR CEILINGS MUST BE FULLY SERVICE ACCESSIBLE. PRIOR TO INSTALLATION, PLUMBING CONTRACTOR SHALL COORDINATE LOCATION OF ACCESS PANELS WITH ARCHITECT AND OTHER CONTRACTORS WHOSE WORK MAY BE AFFECTED.
6. PLUMBING CONTRACTOR SHALL COORDINATE WITH THE MECHANICAL CONTRACTOR ALL VTR'S AND ANY OTHER ROOF PENETRATIONS WITH ROOFTOP MECHANICAL EQUIPMENT AND OUTSIDE AIR INTAKES. A MINIMUM DISTANCE OF 12 FEET SHALL BE MAINTAINED BETWEEN ALL OUTSIDE AIR INTAKES AND VTR'S PER 2021 IMC.
7. ALL PIPING PENETRATIONS OF FIRE-RATED BARRIERS SHALL BE SUFFICIENTLY PROTECTED TO MEET CURRENT CODE.
8. PLUMBING CONTRACTOR SHALL FULLY COORDINATE PIPE ROUTING WITH MECHANICAL CONTRACTOR TO ENSURE EFFICIENT UTILIZATION OF AVAILABLE SPACE. DUCT ROUTING SHALL HAVE PRIORITY OVER PRESSURIZED-PIPE ROUTING.

ADDITIONS
TO
ROBERTSDALE HIGH SCHOOL
ROBERTSDALE, ALABAMA
FOR THE
BALDWIN COUNTY BOARD OF EDUCATION

McKEE and ASSOCIATES
ARCHITECTS, INC.
631 SOUTH HULL STREET, MONTGOMERY, ALABAMA 36104 (334) 834-9933

ALABAMA LICENSED No. 14948 PROFESSIONAL ENGINEER HOWARD M. YONGE
10/11/23

SHEET TITLE :	DOMESTIC WATER RISER DIAGRAM
MCKEE JOB # :	23-195
DRAWN BY :	D. B.
DATE:	10.11.2023
REVISED DATE:	
REVISED DATE:	
REVISED DATE:	

SHEET NO. : P2.2

H.M. YONGE & ASSOCIATES, INC.
CONSULTING ENGINEERS // EST. 1988
51 EAST GREGORY STREET
PENSACOLA, FLORIDA 32502
PHONE: (850)434-2661
253 ST. ANTHONY STREET
MOBILE, ALABAMA 36603
PHONE: (251)690-7446

DonB. I:\Up to date 2023 drawings\23108 - Robertsdale CRIT_HMY dwgs\23108 P2.2.dwg 04 OCTOBER 2023 0507

I:\Up to date 2023 drawings\23108 - Robertsdale CRIT_HMY dwgs\23108 P2.2.dwg
- 4 October, 2023 05:56:11 AM

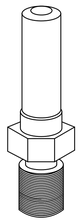

AIR PRELOAD PSI	FIXTURE UNITS	P.D.I. SYMBOL
60	1-11	A
60	12-32	B
60	33-60	C
60	61-113	D
60	114-154	E
60	155-330	F

NOTE: WATER HAMMER ARRESTORS TO BE LOCATED ABOVE ELEVATION OF CEILING.

WATER HAMMER DETAIL
NOT TO SCALE

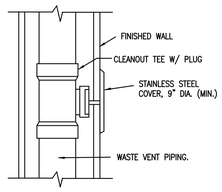

WALL CLEANOUT DETAIL
NOT TO SCALE

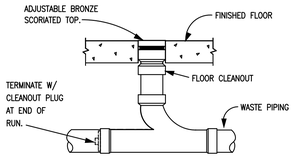

FLOOR CLEANOUT DETAIL
NOT TO SCALE

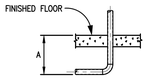

NOM. PIPE DIAMETER	MINIMUM A DIMENSION
1"	12"
2"	15"
3"	18"
4"	20"
6"	24"
8"	30"

PIPING SLAB-PENETRATION DETAIL
NOT TO SCALE

NOTES: ADJACENT PIPING SLAB PENETRATIONS SHALL HAVE A MINIMUM OF ONE INCH CLEARANCE BETWEEN THEM.

ALL PENETRATIONS SHALL BE MADE VERTICALLY.

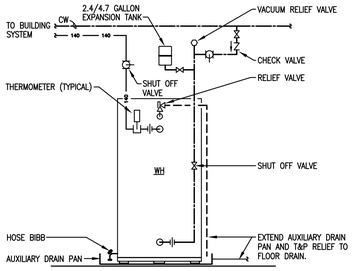

ELECTRIC WATER HEATER DETAIL
NOT TO SCALE

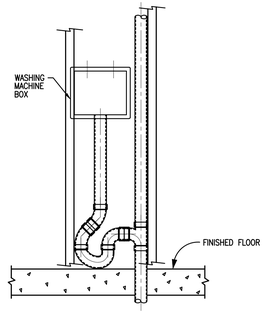

WASHING MACHINE BOX DETAIL
NOT TO SCALE

WATER HEATER SCHEDULE

MARK	CAPACITY (GALLONS)	STORAGE TEMP °F	LOCATION	ELECTRICAL DATA VOLTS	PHASE	Hz	kW	REMARKS
WH-1	40	140	UTILITY 854	480	3	60	6.0	GLASS-LINED, FOAM INSULATED, ENERGY MISER TYPE WITH EXPANSION TANK, T&P RELIEF VALVE, AUXILIARY DRAIN PAN AND HEAT TRAPS. (BASIS OF DESIGN: RHEEM-RUUD ELD40-3,3.)
WH-2	40	140	JANITOR 843	480	3	60	6.0	GLASS-LINED, FOAM INSULATED, ENERGY MISER TYPE WITH EXPANSION TANK, T&P RELIEF VALVE, AUXILIARY DRAIN PAN AND HEAT TRAPS. (BASIS OF DESIGN: RHEEM-RUUD ELD40-3,3.)
WH-3	40	140	STORAGE 826	480	3	60	6.0	GLASS-LINED, FOAM INSULATED, ENERGY MISER TYPE WITH EXPANSION TANK, T&P RELIEF VALVE, AUXILIARY DRAIN PAN AND HEAT TRAPS. (BASIS OF DESIGN: RHEEM-RUUD ELD40-3,3.)
WH-4	40	140	LAUNDRY 812	480	3	60	6.0	GLASS-LINED, FOAM INSULATED, ENERGY MISER TYPE WITH EXPANSION TANK, T&P RELIEF VALVE, AUXILIARY DRAIN PAN AND HEAT TRAPS. (BASIS OF DESIGN: RHEEM-RUUD ELD40-3,3.)
WH-5	40	140	PIPE CHASE 802	480	3	60	6.0	GLASS-LINED, FOAM INSULATED, ENERGY MISER TYPE WITH EXPANSION TANK, T&P RELIEF VALVE, AUXILIARY DRAIN PAN AND HEAT TRAPS. (BASIS OF DESIGN: RHEEM-RUUD ELD40-3,3.)
WH-6	40	140	JANITOR 804	480	3	60	6.0	GLASS-LINED, FOAM INSULATED, ENERGY MISER TYPE WITH EXPANSION TANK, T&P RELIEF VALVE, AUXILIARY DRAIN PAN AND HEAT TRAPS. (BASIS OF DESIGN: RHEEM-RUUD ELD40-3,3.)
WH-7	40	140	MECH. 816	480	3	60	6.0	GLASS-LINED, FOAM INSULATED, ENERGY MISER TYPE WITH EXPANSION TANK, T&P RELIEF VALVE, AUXILIARY DRAIN PAN AND HEAT TRAPS. (BASIS OF DESIGN: RHEEM-RUUD ELD40-3,3.)

NOTES:
1. WH-1 SHALL HAVE TWO ELEMENTS AT 3.0kW EACH WIRED FOR SIMULTANEOUS OPERATION.
2. WH-2 SHALL HAVE TWO ELEMENTS AT 3.0kW EACH WIRED FOR SIMULTANEOUS OPERATION.
3. WH-3 SHALL HAVE TWO ELEMENTS AT 3.0kW EACH WIRED FOR SIMULTANEOUS OPERATION.
4. WH-4 SHALL HAVE TWO ELEMENTS AT 3.0kW EACH WIRED FOR SIMULTANEOUS OPERATION.
5. WH-5 SHALL HAVE TWO ELEMENTS AT 3.0kW EACH WIRED FOR SIMULTANEOUS OPERATION.
6. WH-6 SHALL HAVE TWO ELEMENTS AT 3.0kW EACH WIRED FOR SIMULTANEOUS OPERATION.
7. WH-7 SHALL HAVE TWO ELEMENTS AT 3.0kW EACH WIRED FOR SIMULTANEOUS OPERATION.

PLUMBING LEGEND

AFF	ABOVE FINISHED FLOOR
CO	CLEANOUT
CW	COLD WATER
ECO	EXTERIOR CLEANOUT
FD	FLOOR DRAIN
HW	HOT WATER
WCO	WALL CLEANOUT
VTR	VENT THRU ROOF
———	COLD WATER PIPING
———	UNDERGROUND COLD WATER PIPING
———	140° HOT WATER PIPING
—·—·—	SANITARY WASTE PIPING
—FW—FW—	FIRE WATER PIPING
———	VENT PIPING
——— ———	BALL VALVE
	P-TRAP
	VENT THRU ROOF
	WATER HAMMER ARRESTOR

PLUMBING FIXTURE CONNECTION SCHEDULE

MARK	FIXTURE	CONNECTIONS WASTE	CW	HW	DESCRIPTION
P-1	WATER CLOSET	4"	1"	--	15" HIGH ELONGATED BOWL, FLOOR MOUNTED, FLOOR OUTLET, FLUSH VALVE TYPE. PROVIDE WHITE OPEN FRONT SEAT LESS COVER.
P-1A	WATER CLOSET (HANDICAPPED)	4"	1"	--	16-1/2" HIGH ELONGATED BOWL, FLOOR MOUNTED, FLOOR OUTLET, FLUSH VALVE TYPE. PROVIDE WHITE OPEN FRONT SEAT LESS COVER. INSTALL PER ADA REQUIREMENTS.
P-2	URINAL	2"	3/4"	--	WALL HUNG TYPE WITH FLUSH VALVE AND FLOOR MOUNTED CARRIER. MANUAL 1.0 gpf FLUSH
P-2A	URINAL (HANDICAPPED)	2"	3/4"	--	WALL HUNG TYPE WITH FLUSH VALVE AND FLOOR MOUNTED CARRIER. MANUAL 1.0 gpf FLUSH. INSTALL PER ADA REQUIREMENTS.
P-3	LAVATORY	1-1/2"	3/4"	3/4"	WALL HUNG VITREOUS CHINA WITH SINGLE LEVER FAUCET AND GRID WASTE, 1-1/2" 17 GA. P-TRAP, FLEXIBLE SUPPLIES AND STOPS. FLOOR MOUNTED CONCEALED ARM CARRIER, AND INSULATION KIT.
P-3A	LAVATORY (HANDICAPPED)	1-1/2"	3/4"	3/4"	WALL HUNG VITREOUS CHINA WITH SINGLE LEVER FAUCET AND GRID WASTE, 1-1/2" 17 GA. P-TRAP, FLEXIBLE SUPPLIES AND STOPS. FLOOR MOUNTED CONCEALED ARM CARRIER, AND INSULATION KIT. INSTALL PER ADA REQUIREMENTS.
P-4	WATER COOLER	1-1/2"	1/2"	--	WALL HUNG, DUAL-HEIGHT COOLER 1-1/4", 17 GA P-TRAP, FLEXIBLE SUPPLY WITH ANGLE STOP AND FLOOR-SUPPORTED CARRIER. SEE ARCHITECTURAL DRAWINGS FOR MOUNTING HEIGHT. INSTALL PER ADA REQUIREMENTS. UNIT TO INCLUDE BOTTLE-FILLING STATION.
P-5	UTILITY SINK	2"	3/4"	3/4"	32"x16" SINGLE COMPARTMENT, POLYPROPYLENE. PROVIDE WITH GOOSENECK FAUCET WITH 4" WRIST BLADE HANDLES, BASKET STRAINER, 17 GA. P-TRAP, SUPPLY WITH STOP.
P-6	TRAINER'S ROOM SINK	1-1/2"	3/4"	3/4"	SINGLE COMPARTMENT, STAINLESS STEEL SINK. PROVIDE WITH GOOSENECK FAUCET WITH SPRAY, LEVER HANDLE, GRID WASTE, 17 GA. P-TRAP, AND FLEXIBLE SUPPLIES WITH STOPS.
P-7	SHOWER (HANDICAPPED)	3"	3/4"	3/4"	PRE-FABRICATED SHOWER UNIT. PROVIDE WITH PRESSURE BALANCED ANTI-SCALD SINGLE LEVER VALVE WITH HAND HELD SHOWER HEAD, VERTICAL BAR, HOSE, VACUUM BREAKER, AND WALL SUPPLY ELBOW. INSTALL PER ADA REQUIREMENTS.
P-8	FIXTURE NUMBER	NOT USED			
P-9	ICE MAKER BOX	--	1/2"	--	GALVANIZED STEEL, WALL RECESSED BOX WITH 1/2" COLD WATER VALVE
P-10	WASHING MACH. BOX	2"	3/4"	3/4"	GALVANIZED STEEL, WALL RECESSED BOX
P-11	JANITOR'S SINK	3"	1/2"	1/2"	24"x24"x12" FLOOR-MOUNTED TYPE WITH WALL-MOUNTED FAUCET, VACUUM BREAKER, WALL BRACE, 3" IPS DRAIN, STAINLESS STEEL GRATE AND WALL SPLASH GUARDS, AND MOP RACK.
P-12	COUNTER SINK	1-1/2"	3/4"	3/4"	17"x22" SINGLE COMPARTMENT, STAINLESS STEEL WITH 8" CENTERS. PROVIDE GOOSENECK FAUCET WITH 4" WRIST BLADE HANDLES, GRID STRAINER, 17 GA. P-TRAP, SUPPLIES WITH STOPS. PROVIDE INSULATION KIT.
P-13	WHIRLPOOL	--	3/4"	3/4"	UNIT TO BE PROVIDED BY OTHERS BUT FULLY INSTALLED WITH ALL NEEDED CONNECTIONS TO TO BE MADE BY THE PLUMBING AND ELECTRICAL CONTRACTORS.

NOTE: FIXTURES SHALL BE WHITE AND FAUCETS SHALL BE POLISHED CHROME UNLESS OTHERWISE INDICATED. REFER TO SPECIFICATIONS FOR ADDITIONAL INFORMATION. ALL HANDICAPPED FIXTURES SHALL BE ADA COMPLIANT AND INSTALLED PER ADA REQUIREMENTS. REFERENCE ARCHITECTURAL PLANS FOR INSTALLATION HEIGHTS. ALL DOMESTIC WATER PIPING ABOVE THE SLAB SHALL BE INSULATED INCLUDING PIPING INSIDE WALLS. PIPING SHALL NOT BE INSTALLED IN A MANNER IN WHICH CONTACT WITH MASONRY PRODUCTS IS ALLOWED. EACH FIXTURE MUST BE PROVIDED WITH STOPS. ALL STOPS MUST BE FULLY ACCESSIBLE. TEMPERED WATER FOR PUBLIC LAVATORIES MUST BE SUPPLIED THROUGH A TEMPERATURE-LIMITING DEVICE THAT CONFORMS TO ASSE 1070. SEE 2021 IPC 416.5. MAKE REVISIONS AS REQUIRED FOR COMPLIANCE.

H.M. YONGE & ASSOCIATES, INC.
CONSULTING ENGINEERS // EST. 1988
51 EAST GREGORY STREET
PENSACOLA, FLORIDA 32502
PHONE: (850)434-2661
253 ST. ANTHONY STREET
MOBILE, ALABAMA 36603
PHONE: (251)690-7446

ADDITIONS
TO
ROBERTSDALE HIGH SCHOOL
ROBERTSDALE, ALABAMA
FOR THE
BALDWIN COUNTY BOARD OF EDUCATION

McKEE and ASSOCIATES
ARCHITECTS, INC.
631 SOUTH HULL STREET, MONTGOMERY, ALABAMA 36104 (334) 834-9933

ALABAMA LICENSED No. 14948 PROFESSIONAL ENGINEER
ALABAMA LICENSED No. 10407 PROFESSIONAL ENGINEER
10/11/23

SHEET TITLE : PLUMBING LEGEND, SCHEDULES, AND DETAILS

MCKEE JOB # : 23-195

DRAWN BY : D. B.

DATE: 10.11.2023

REVISED DATE:

REVISED DATE:

REVISED DATE:

SHEET NO. : P3.1

- I:\Up to date 2023 drawings\23108 - Robertsdale CRIT_HMY dwgs\23108 P3.1.dwg
- 4 October, 2023 05:56:44 AM

DonB. I:\Up to date 2023 drawings\23108 - Robertsdale CRIT_HMY dwgs\23108 P3.1.dwg 04 OCTOBER 2023 0531

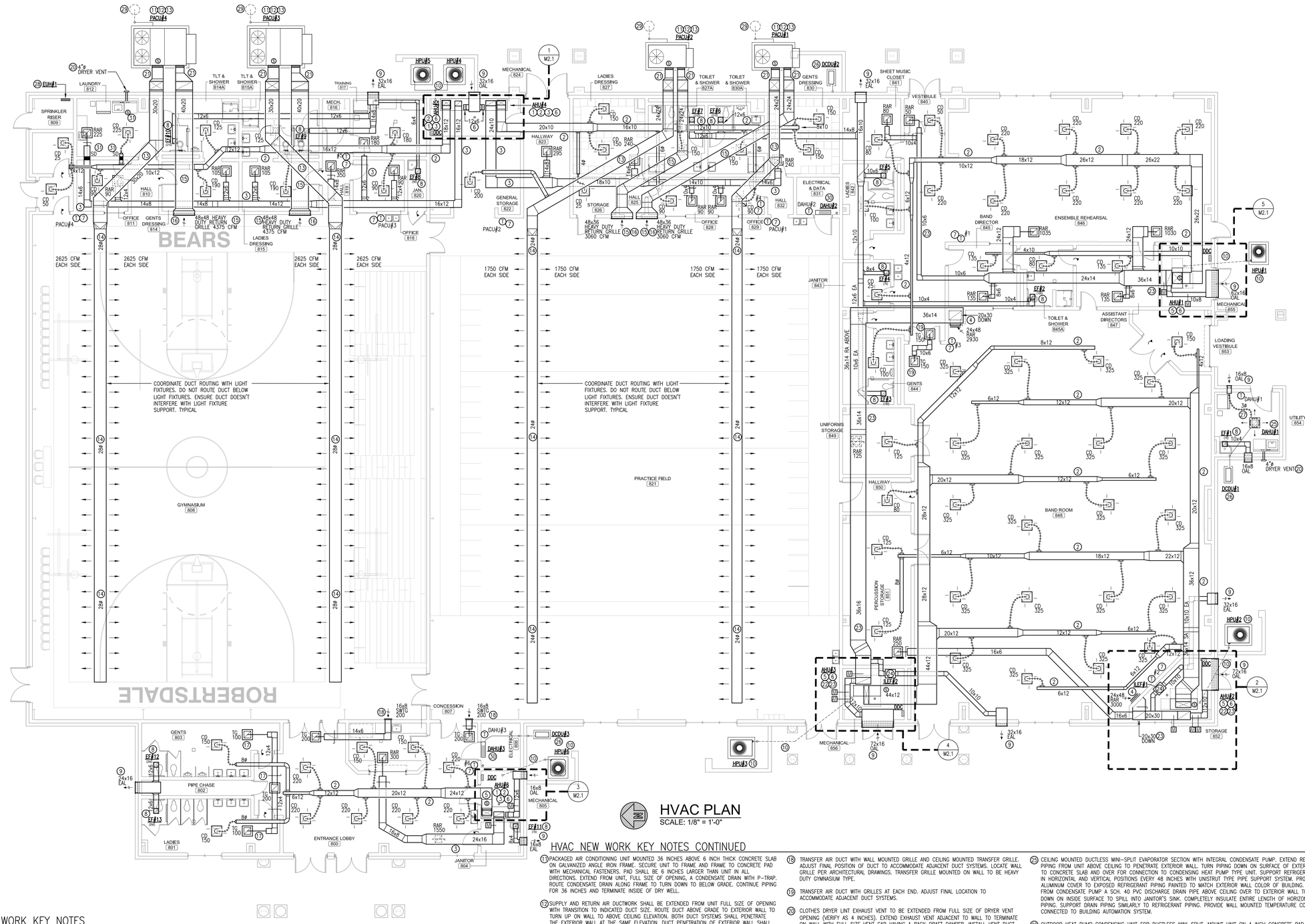

HVAC PLAN
SCALE: 1/8" = 1'-0"

HVAC NEW WORK KEY NOTES

1. AIR HANDLING UNIT OF SPLIT SYSTEM HEAT PUMP MOUNTED ON RETURN AIR PLENUM CONSTRUCTED OF NON-COMBUSTIBLE MATERIALS. A METAL FRAME SHALL BE OF GALVANIZED ANGLED IRON WITH GALVANIZED SHEET METAL SIDES AND TOP. INSULATE INTERIOR OF PLENUM WITH 1-1/2 INCH THICK FIBROUS DUCT BOARD. APPLY INSULATION TO TOP, BOTTOM AND SIDES TO COVER ALL INTERIOR EXPOSED SURFACES. EXTEND FROM UNIT, FULL SIZE OF UNIT OPENING A CONDENSATE DRAIN ROUTED TO SPILL ONTO FLOOR DRAIN. COMPLETELY INSULATE CONDENSATE DRAIN LINE FROM UNIT TO FLOOR DRAIN. INCLUDE IN P-TRAP OF DRAIN LINE A FLOAT SWITCH TO AUTOMATICALLY SHUT DOWN UNIT AS DRAINAGE SYSTEM FLOODS.
2. SUPPLY AIR DUCTWORK SHALL EXTEND UP FROM UNIT FULL SIZE OF OPENING WITH TRANSITION TO INDICATED DUCT SIZE. ROUTE DUCT ABOVE CEILING GENERALLY AS INDICATED WITH OFFSETS TO AVOID OBSTRUCTIONS. EXTEND BRANCH DUCTS FOR CONNECTION OF DESIGNATED AIR DEVICES. INCLUDE A MANUAL VOLUME DAMPER IN EACH BRANCH DUCT AND BALANCE AIR DEVICE TO INDICATED AIR FLOW.
3. RETURN AIR DUCTWORK SHALL BE EXTENDED UP FROM RETURN AIR PLENUM AND ELBOW TO HORIZONTAL POSITION ABOVE CEILING. COORDINATE FINAL ELEVATION OF DUCTWORK WITH ADJACENT DUCT SYSTEMS. EXTEND BRANCH DUCTS FROM TRUNK DUCT FOR CONNECTION TO DESIGNATED AIR DEVICES. INCLUDE A MANUAL VOLUME DAMPER IN EACH BRANCH DUCT AND BALANCE AIR DEVICE TO INDICATED AIR FLOW.
4. RETURN AIR DUCT SHALL EXTEND FROM TRUNK DUCT TO TURN DOWN FOR CONNECTION TO WALL MOUNTED RETURN AIR REGISTER. MOUNT RETURN AIR REGISTER WITH BOTTOM 18 INCHES ABOVE FLOOR. INCLUDE A MANUAL VOLUME DAMPER IN HORIZONTAL DUCT ABOVE CHASE. LINE INTERIOR OF DUCT WITH 1 INCH THICK FIBROUS LINER FROM WALL REGISTER UP THROUGH CONNECTION TO TRUNK DUCT.
5. DUCT MOUNTED SMOKE DETECTOR AND BI-POLAR IONIZATION DEVICE IN SUPPLY AIR DUCT. INTERLOCK DETECTOR WITH AIR HANDLING UNIT AND FIRE ALARM PANEL. AS DETECTOR IS ACTIVATED, THE AIR HANDLING UNIT SHALL AUTOMATICALLY SHUT DOWN AND A SIGNAL SENT TO THE FIRE ALARM PANEL. INTERLOCK BI-POLAR IONIZATION DEVICE WITH AIR HANDLING UNIT SUCH THAT AS UNIT IS OPERATING THE BI-POLAR DEVICE SHALL BE OPERATING AND OTHERWISE BOTH SHALL NOT BE OPERATING.
6. OUTDOOR AIR INTAKE DUCTWORK SHALL BE EXTENDED UP FROM RETURN AIR PLENUM AND OVER FOR CONNECTION TO WALL MOUNTED OUTDOOR AIR INTAKE LOUVER. INSTALL A MANUAL VOLUME DAMPER AND MOTORIZED DAMPER IN OUTDOOR AIR DUCTWORK WITHIN 36 INCHES OF PLENUM. AN AIR FLOW MEASURING STATION SHALL ALSO BE INSTALLED IN ACCORDANCE WITH MANUFACTURER'S WRITTEN INSTRUCTIONS. BALANCE MANUAL VOLUME DAMPER TO INDICATED AIR FLOW. INTERLOCK MOTORIZED DAMPER WITH AIR FLOW STATION AND BUILDING AUTOMATED CONTROL SYSTEM SUCH THAT DAMPER SHALL BE OPEN DURING OCCUPIED HOURS AND MODULATE ACCORDING TO CARBON DIOXIDE LEVELS AND AIR FLOW MEASURING STATION. OTHERWISE THE MOTORIZED DAMPER SHALL BE CLOSED.
7. WALL MOUNTED CONTROLLER FOR TEMPERATURE, HUMIDITY AND CARBON DIOXIDE TO BE CONTROLLED AND MONITORED. COORDINATE INTERLOCKING OF OUTDOOR AIR MOTORIZED DAMPER DIRECTLY TO BUILDING AUTOMATION SYSTEM THROUGH DDC CONTROL PANEL.
8. CEILING MOUNTED EXHAUST FAN WITH EXHAUST AIR DISCHARGE DUCTWORK ROUTED FOR CONNECTION TO DESIGNATED TRUNK DUCT OR PLENUM OF DISCHARGE AIR LOUVER. INTERLOCK CONTROL OF EXHAUST FAN AS SCHEDULED.
9. WALL MOUNTED LOUVER THAT IS WEATHERPROOF AND HURRICANE RATED PER MIAMI-DADE STANDARDS. PROVIDE LOUVER WITH FULL SIZE PLENUM EXTENDING A MINIMUM OF 16 INCHES FROM BACK OF LOUVER FOR CONNECTION OF DESIGNATED DUCTWORK.
10. OUTDOOR (HEAT PUMP TYPE) CONDENSING UNIT MOUNTED ON 6 INCH THICK CONCRETE PAD. PAD SHALL BE 6 INCHES LARGER THAN UNIT IN ALL DIRECTIONS. SECURE UNIT TO PAD AT EACH SUPPORT. EXTEND REFRIGERANT PIPING FROM CONDENSING UNIT DOWN TO BELOW GRADE INSIDE OF 6 INCH UNDERGROUND PVC (SCH. 40) CONDUIT TO BELOW MECHANICAL ROOM TO TURN UP ON WALL AS INDICATED. INCLUDE A 3/4 INCH CONDUIT INSIDE OF 6 INCH CONDUIT WITH REFRIGERANT PIPING FOR CONTROL WIRING. SEAL BOTH ENDS OF OPEN CONDUIT RODENT AND WEATHERPROOF. USE OF SPRAY FOAM ALONE IS NOT ACCEPTABLE.

HVAC NEW WORK KEY NOTES CONTINUED

11. PACKAGED AIR CONDITIONING UNIT MOUNTED 36 INCHES ABOVE 6 INCH THICK CONCRETE SLAB ON GALVANIZED ANGLE IRON FRAME. SECURE UNIT TO FRAME AND FRAME TO CONCRETE PAD WITH MECHANICAL FASTENERS. PAD SHALL BE 6 INCHES LARGER THAN UNIT IN ALL DIRECTIONS. EXTEND FROM UNIT, FULL SIZE OF OPENING, A CONDENSATE DRAIN WITH P-TRAP. ROUTE CONDENSATE DRAIN ALONG FRAME TO TURN DOWN TO BELOW GRADE. CONTINUE PIPING FOR 36 INCHES AND TERMINATE INSIDE OF DRY WELL.
12. SUPPLY AND RETURN AIR DUCTWORK SHALL BE EXTENDED FROM UNIT FULL SIZE OF OPENING WITH TRANSITION TO INDICATED DUCT SIZE. ROUTE DUCT ABOVE GRADE TO EXTERIOR WALL TO TURN UP ON WALL TO ABOVE CEILING ELEVATION. BOTH DUCT SYSTEMS SHALL PENETRATE THE EXTERIOR WALL AT THE SAME ELEVATION. DUCT PENETRATION OF EXTERIOR WALL SHALL BE RODENT PROOF AND WEATHER TIGHT PER ARCHITECTURAL INSTRUCTIONS. ONCE THE DUCTWORK IS INTERIOR OF THE BUILDING COORDINATE ELEVATION CHANGES TO ACCOMMODATE FINAL ROUTING.
13. SUPPLY AIR DUCTWORK SHALL OFFSET UPWARD TO PENETRATE WALL INTO GYMNASIUM WITH BOTTOM OF DUCTWORK 12 INCHES MINIMUM ABOVE THE TOP ELEVATION OF THE LIGHT FIXTURES. TRANSITION DUCT FROM RECTANGULAR TO SQUARE AND TO SPIRAL PRIOR TO WALL PENETRATION. EXTEND SUPPLY DUCT A MINIMUM OF 12 INCHES INTO SPACE FOR CONNECTION OF FABRIC SPIRAL DUCTWORK. PROVIDE A DUCT ESCUTCHEON AROUND SPIRAL DUCT ON WALL PENETRATION.
14. FABRIC SPIRAL DUCTWORK SHALL BE INSTALLED WITH THE BOTTOM OF THE DUCT A MINIMUM OF 12 INCHES ABOVE THE TOP ELEVATION OF THE LIGHT FIXTURES. MECHANICAL CONTRACTOR TO COORDINATE FINAL DUCT ELEVATION WITH ARCHITECTURAL DRAWINGS. FABRIC DUCTWORK SHALL BE PROVIDED WITH A FULL SUPPORT STRUCTURAL SYSTEM THAT PREVENTS THE DUCTWORK FROM COLLAPSING AS THE AIR HANDLING UNIT IS NOT OPERATING.
15. RETURN AIR DUCTWORK SHALL BE ROUTED BENEATH SUPPLY AIR DUCTWORK AT AN ELEVATION OF APPROXIMATELY 24 INCHES ABOVE CEILING. COORDINATE FINAL ELEVATION WITH ARCHITECTURAL DRAWINGS AND ADJACENT DUCT SYSTEMS. TERMINATE RETURN AIR DUCTWORK ON PLENUM BEHIND WALL MOUNTED RETURN AIR REGISTER. INCLUDE A MANUAL VOLUME DAMPER IN RETURN AIR DUCTWORK AND BALANCE RETURN REGISTER TO INDICATED AIR FLOW.
16. WALL MOUNTED RETURN AIR REGISTER TO BE POSITIONED WITH BOTTOM 24 INCHES ABOVE CEILING. COORDINATE FINAL POSITION WITH ARCHITECTURAL DRAWINGS. REGISTER SHALL BE HEAVY DUTY GYMNASIUM RATED TYPE. INCLUDE A FULL SIZE PLENUM BEHIND REGISTER 12 INCHES MINIMUM DEEP. CONNECT RETURN AIR DUCT TO PLENUM.
17. TRANSFER AIR DUCT WITH TRANSFER GRILLES AT EACH END AND ONE TRANSFER GRILLE AT CENTER.
18. TRANSFER AIR DUCT WITH WALL MOUNTED GRILLE AND CEILING MOUNTED TRANSFER GRILLE. ADJUST FINAL POSITION OF DUCT TO ACCOMMODATE ADJACENT DUCT SYSTEMS. LOCATE WALL GRILLE PER ARCHITECTURAL DRAWINGS. TRANSFER GRILLE MOUNTED ON WALL TO BE HEAVY DUTY GYMNASIUM TYPE.
19. TRANSFER AIR DUCT WITH GRILLES AT EACH END. ADJUST FINAL LOCATION TO ACCOMMODATE ADJACENT DUCT SYSTEMS.
20. CLOTHES DRYER LINT EXHAUST VENT TO BE EXTENDED FROM FULL SIZE OF DRYER VENT OPENING (VERIFY AS 4 INCHES). EXTEND EXHAUST VENT ADJACENT TO WALL TO TERMINATE ON WALL WITH FULL SIZE VENT CAP HAVING A BACK DRAFT DAMPER. INSTALL VENT DUCT WITHOUT HAVING 'BELLIES,' SCREWS PROTRUDING INTO AIR STREAM, AND IN ACCORDANCE WITH IBC MECHANICAL.
21. DUCTWORK EXPOSED TO WEATHER SHALL BE DOUBLE WALL WITH 1-1/2 INCH OF FIBROUS INSULATION BETWEEN LAYERS. THE OUTER LAYER OF GALVANIZED SHEET METAL SHALL BE SEALED WEATHERPROOF AND WATER TIGHT. SUPPORT DUCTWORK ABOVE GRADE EVERY 48 INCHES WITH UNISTRUT FRAME MOUNTED ON 4 INCH THICK CONCRETE PADS. VERTICAL DUCT SHALL BE SUPPORTED EVERY 84 INCHES WITH UNISTRUT KNEE BASE SYSTEM FASTENED TO EXTERIOR WALL.
22. AIR HANDLING UNIT MOUNTED IN VERTICAL POSITION ON 6 INCH HIGH CONCRETE HOUSEKEEPING PAD. CONCRETE PAD SHALL BE EXTENDED BEHIND UNIT FOR SUPPORT OF RETURN AIR DUCTWORK SYSTEM. EXTEND FROM FULL SIZE OF UNIT OPENING A CONDENSATE DRAIN WITH P-TRAP TO TERMINATE ABOVE FLOOR DRAIN. SUPPORT CONDENSATE DRAIN LINE EVERY 48 INCHES WITH UNISTRUT TYPE PIPE SUPPORT SYSTEM. INSULATE ENTIRE LENGTH OF CONDENSATE DRAIN LINE FROM UNIT TO ABOVE FLOOR DRAIN. INCLUDE IN P-TRAP A FLOAT SWITCH TO AUTOMATICALLY SHUT DOWN UNIT AS DRAINAGE SYSTEM FLOODS.
23. EXTEND FROM BACK OF UNIT, FULL SIZE OF UNIT OPENING A RETURN AIR DUCT. ELBOW DUCT UP WITH TRANSITION TO INDICATED DUCT SIZE. ROUTE DUCT ABOVE CEILING GENERALLY AS INDICATED WITH OFFSETS TO AVOID INTERFERENCES. EXTEND BRANCH DUCTS FOR CONNECTION OF DESIGNATED AIR DEVICES. INCLUDE A MANUAL VOLUME DAMPER IN EACH BRANCH DUCT AND BALANCE TO DESIGNATED AIR FLOW. A MANUAL VOLUME DAMPER SHALL BE INSTALLED IN RETURN AIR DUCT UPSTREAM OF THE OUTDOOR AIR INTAKE DUCTWORK.
24. DUCT MOUNTED IN LINE EXHAUST FAN WITH EXHAUST DUCT ROUTED FOR CONNECTION TO PLENUM ON EXHAUST AIR DISCHARGE LOUVER. INTERLOCK EXHAUST FAN WITH MOTORIZED OUTDOOR INTAKE DAMPER SUCH THAT AS DAMPER IS OPEN THE FAN SHALL BE OPERATING AND OTHERWISE NOT BE OPERATING.
25. CEILING MOUNTED DUCTLESS MINI-SPLIT EVAPORATOR SECTION WITH INTEGRAL CONDENSATE PUMP. EXTEND REFRIGERANT PIPING FROM UNIT ABOVE CEILING TO PENETRATE EXTERIOR WALL. TURN PIPING DOWN ON SURFACE OF EXTERIOR WALL TO CONCRETE SLAB AND OVER FOR CONNECTION TO CONDENSING HEAT PUMP TYPE UNIT. SUPPORT REFRIGERANT PIPING IN HORIZONTAL AND VERTICAL POSITIONS EVERY 48 INCHES WITH UNISTRUT TYPE PIPE SUPPORT SYSTEM. PROVIDE AN ALUMINUM COVER TO EXPOSED REFRIGERANT PIPING PAINTED TO MATCH EXTERIOR WALL COLOR OF BUILDING. EXTEND FROM CONDENSATE PUMP A SCH. 40 PVC DISCHARGE DRAIN PIPE ABOVE CEILING OVER TO EXTERIOR WALL TO TURN DOWN ON INSIDE SURFACE TO SPILL INTO JANITOR'S SINK. COMPLETELY INSULATE ENTIRE LENGTH OF HORIZONTAL DRAIN PIPING, SUPPORT DRAIN PIPING SIMILARLY TO REFRIGERANT PIPING. PROVIDE WALL MOUNTED TEMPERATURE CONTROLLER CONNECTED TO BUILDING AUTOMATION SYSTEM.
26. OUTDOOR HEAT PUMP CONDENSING UNIT FOR DUCTLESS MINI-SPLIT. MOUNT UNIT ON 4 INCH CONCRETE PAD. SECURE UNIT AT EACH CORNER TO PAD. EXTEND REFRIGERANT PIPING FROM UNIT OVER TO EXTERIOR WALL AND TURN UP ON SURFACE TO PENETRATE WALL ABOVE CEILING ELEVATION. SUPPORT PIPING IN HORIZONTAL AND VERTICAL POSITIONS EVERY 48 INCHES WITH UNISTRUT TYPE PIPE SUPPORT SYSTEM. PROVIDE ALUMINUM COVER OVER REFRIGERANT PIPING PAINTED TO MATCH COLOR OF BUILDING.
27. EXTEND FROM FULL SIZE OF UNIT OPENING AN OUTDOOR AIR INTAKE DUCT FOR CONNECTION TO WALL MOUNTED LOUVER. VERIFY DUCT SIZE AS 3 INCHES. INCLUDE A MOTORIZED DAMPER AND MANUAL VOLUME DAMPER IN DUCT AND BALANCE TO SCHEDULED AIR FLOW. INTERLOCK MOTORIZED DAMPER WITH WALL MOUNTED CONTROLLER SUCH THAT DAMPER SHALL BE OPEN DURING OCCUPIED HOURS AND CLOSED OTHERWISE.
28. WALL MOUNTED ELECTRIC UNIT HEATER WITH INTEGRAL CONTROLS. BOTTOM OF HEATER SHALL BE 6'0" ABOVE FINISHED FLOOR SET CONTROLLER FOR 45'F SUCH THAT UNIT IS ENERGIZED BELOW THIS SETTING.
29. CONDENSATE DRY WELL TO BE POSITIONED GENERALLY AS INDICATED. PROVIDE 24 INCH DIAMETER PVC (SCH.40) DRAINAGE PIPING THAT IS 30 INCHES LONG AND FILL WITH NO.2 PEA GRAVEL. (REFERENCE DETAIL FOR ADDITIONAL INFORMATION).
30. DUCTLESS MINI-SPLIT EVAPORATOR SECTION MOUNTED ON WALL AT 16 INCHES BENEATH CEILING. PROVIDE WALL TEMPERATURE CONTROLLER FOR CONTROL OF UNIT THROUGH DDC CONTROL PANEL. ROUTE REFRIGERANT PIPING ABOVE CEILING OVER AND THROUGH EXTERIOR FOR CONNECTION TO OUTDOOR UNIT. EXTEND CONDENSATE PIPING FROM UNIT DOWN ON WALL TO SPILL INTO FLOOR DRAIN.
31. SMOKE DAMPER. INTERLOCK WITH SMOKE DETECTOR LOCATED IN LAUNDRY ROOM.

H.M. YONGE & ASSOCIATES, INC.
CONSULTING ENGINEERS // EST. 1988
51 EAST GREGORY STREET
PENSACOLA, FLORIDA 32502
PHONE: (850)434-2661
253 ST. ANTHONY STREET
MOBILE, ALABAMA 36603
PHONE: (251)690-7446

ADDITIONS
TO
ROBERTSDALE HIGH SCHOOL
ROBERTSDALE, ALABAMA
FOR THE
BALDWIN COUNTY BOARD OF EDUCATION

McKEE and ASSOCIATES
ARCHITECTS, INC.
631 SOUTH HULL STREET, MONTGOMERY, ALABAMA 36104 (334) 834-9933

SHEET TITLE : HVAC PLAN

MCKEE JOB # : 23-195

DRAWN BY : AWB

DATE: 10.11.2023

REVISED DATE:

REVISED DATE:

REVISED DATE:

SHEET NO. : M1.1

- M:\Jobs_Active\23108 Robertsdale High School Band Room\23108M11 HVAC PLAN.dwg
- Thursday, October 5, 2023 10:24:11 AM

AWB> M:\Jobs_Active\23108 Robertsdale High School Band Room\23108M11 HVAC PLAN.dwg 10/05/23 10:23

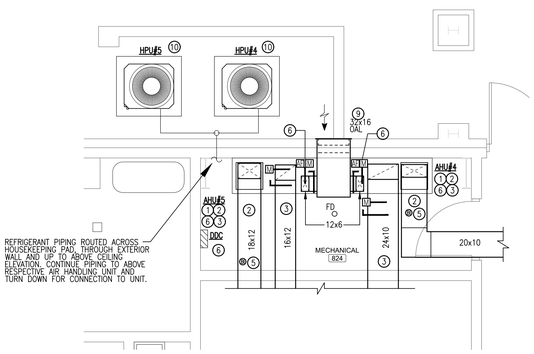

1 M2.1 — ENLARGED MECHANICAL ROOM 824 PLAN
SCALE: 1/4" = 1'-0"

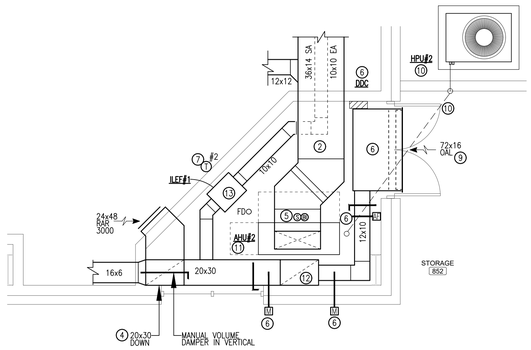

2 M2.1 — ENLARGED MECHANICAL ROOM 852 PLAN
SCALE: 1/4" = 1'-0"

HVAC NEW WORK KEY NOTES

1. AIR HANDLING UNIT OF SPLIT SYSTEM HEAT PUMP MOUNTED ON RETURN AIR PLENUM CONSTRUCTED OF NON-COMBUSTIBLE MATERIALS. A METAL FRAME SHALL BE OF GALVANIZED ANGLED IRON WITH GALVANIZED SHEET METAL SIDES AND TOP. INSULATE INTERIOR OF PLENUM WITH 1-1/2 INCH THICK FIBROUS DUCT BOARD. APPLY INSULATION TO TOP, BOTTOM AND SIDES TO COVER ALL INTERIOR EXPOSED SURFACES. EXTEND FROM UNIT, FULL SIZE OF UNIT OPENING A CONDENSATE DRAIN ROUTED TO SPILL ONTO FLOOR DRAIN. COMPLETELY INSULATE CONDENSATE DRAIN LINE FROM UNIT TO FLOOR DRAIN. INCLUDE IN P-TRAP OF DRAIN LINE A FLOAT SWITCH TO AUTOMATICALLY SHUT DOWN UNIT AS DRAINAGE SYSTEM FLOODS.
2. SUPPLY AIR DUCTWORK SHALL EXTEND UP FROM UNIT FULL SIZE OF OPENING WITH TRANSITION TO INDICATED DUCT SIZE. ROUTE DUCT ABOVE CEILING GENERALLY AS INDICATED WITH OFFSETS TO AVOID OBSTRUCTIONS. EXTEND BRANCH DUCTS FOR CONNECTION OF DESIGNATED AIR DEVICES. INCLUDE A MANUAL VOLUME DAMPER IN EACH BRANCH DUCT AND BALANCE AIR DEVICE TO INDICATED AIR FLOW.
3. RETURN AIR DUCTWORK SHALL BE EXTENDED UP FROM RETURN AIR PLENUM AND ELBOW TO HORIZONTAL POSITION ABOVE CEILING. COORDINATE FINAL ELEVATION OF DUCTWORK WITH ADJACENT DUCT SYSTEMS. EXTEND BRANCH DUCTS FROM TRUNK DUCT FOR CONNECTION TO DESIGNATED AIR DEVICES. INCLUDE A MANUAL VOLUME DAMPER IN EACH BRANCH DUCT AND BALANCE AIR DEVICE TO INDICATED AIR FLOW.
4. RETURN AIR DUCT SHALL EXTEND FROM TRUNK DUCT TO TURN DOWN FOR CONNECTION TO WALL MOUNTED RETURN AIR REGISTER. MOUNT RETURN AIR REGISTER WITH BOTTOM 18 INCHES ABOVE FLOOR. INCLUDE A MANUAL VOLUME DAMPER IN HORIZONTAL DUCT ABOVE CHASE. LINE INTERIOR OF DUCT WITH 1 INCH THICK FIBROUS LINER FROM WALL REGISTER UP THROUGH CONNECTION TO TRUNK DUCT.
5. DUCT MOUNTED SMOKE DETECTOR AND BI-POLAR IONIZATION DEVICE IN SUPPLY AIR DUCT. INTERLOCK DETECTOR WITH AIR HANDLING UNIT AND FIRE ALARM PANEL. AS DETECTOR IS ACTIVATED, THE AIR HANDLING UNIT SHALL AUTOMATICALLY SHUT DOWN AND A SIGNAL SENT TO THE FIRE ALARM PANEL. INTERLOCK BI-POLAR IONIZATION DEVICE WITH AIR HANDLING UNIT SUCH THAT AS UNIT IS OPERATING THE BI-POLAR DEVICE SHALL BE OPERATING AND OTHERWISE BOTH SHALL NOT BE OPERATING.
6. OUTDOOR AIR INTAKE DUCTWORK SHALL BE EXTENDED UP FROM RETURN AIR PLENUM AND OVER FOR CONNECTION TO WALL MOUNTED OUTDOOR AIR INTAKE LOUVER. INSTALL A MANUAL VOLUME DAMPER AND MOTORIZED DAMPER IN OUTDOOR AIR DUCTWORK WITHIN 36 INCHES OF PLENUM. AN AIR FLOW MEASURING STATION SHALL ALSO BE INSTALLED IN ACCORDANCE WITH MANUFACTURER'S WRITTEN INSTRUCTIONS. BALANCE MANUAL VOLUME DAMPER TO INDICATED AIR FLOW. INTERLOCK MOTORIZED DAMPER WITH AIR FLOW STATION AND BUILDING AUTOMATED CONTROL SYSTEM SUCH THAT DAMPER SHALL BE OPEN DURING OCCUPIED HOURS AND MODULATE ACCORDING TO CARBON DIOXIDE LEVELS AND AIR FLOW MEASURING STATION. OTHERWISE THE MOTORIZED DAMPER SHALL BE CLOSED.
7. WALL MOUNTED CONTROLLER FOR TEMPERATURE, HUMIDITY AND CARBON DIOXIDE TO BE CONTROLLED AND MONITORED. COORDINATE INTERLOCKING OF OUTDOOR AIR MOTORIZED DAMPER DIRECTLY TO BUILDING AUTOMATION SYSTEM THROUGH DDC CONTROL PANEL.
8. CEILING MOUNTED EXHAUST FAN WITH EXHAUST AIR DISCHARGE DUCTWORK ROUTED FOR CONNECTION TO DESIGNATED TRUNK DUCT OR PLENUM OF DISCHARGE AIR LOUVER. INTERLOCK CONTROL OF EXHAUST FAN AS SCHEDULED.
9. WALL MOUNTED LOUVER THAT IS WEATHERPROOF AND HURRICANE RATED PER MIAMI-DADE STANDARDS. PROVIDE LOUVER WITH FULL SIZE PLENUM EXTENDING A MINIMUM OF 16 INCHES FROM BACK OF LOUVER FOR CONNECTION OF DESIGNATED DUCTWORK.
10. OUTDOOR (HEAT PUMP TYPE) CONDENSING UNIT MOUNTED ON 6 INCH THICK CONCRETE PAD. PAD SHALL BE 6 INCHES LARGER THAN UNIT IN ALL DIRECTIONS. SECURE UNIT TO PAD AT EACH SUPPORT. EXTEND REFRIGERANT PIPING FROM CONDENSING UNIT DOWN TO BELOW GRADE INSIDE OF 6 INCH UNDERGROUND PVC (SCH. 40) CONDUIT TO BELOW MECHANICAL ROOM TO TURN UP ON WALL AS INDICATED. INCLUDE A 3/4 INCH CONDUIT INSIDE OF 6 INCH CONDUIT WITH REFRIGERANT PIPING FOR CONTROL WIRING. SEAL BOTH ENDS OF OPEN CONDUIT RODENT AND WEATHERPROOF. USE OF SPRAY FOAM ALONE IS NOT ACCEPTABLE.
11. AIR HANDLING UNIT MOUNTED IN VERTICAL POSITION ON 6 INCH HIGH CONCRETE HOUSEKEEPING PAD. CONCRETE PAD SHALL BE EXTENDED BEHIND UNIT FOR SUPPORT OF RETURN AIR DUCTWORK SYSTEM. EXTEND FROM FULL SIZE OF UNIT OPENING A CONDENSATE DRAIN WITH P-TRAP TO TERMINATE ABOVE FLOOR DRAIN. SUPPORT CONDENSATE DRAIN LINE EVERY 48 INCHES WITH UNISTRUT TYPE PIPE SUPPORT SYSTEM. INSULATE ENTIRE LENGTH OF CONDENSATE DRAIN LINE FROM UNIT TO ABOVE FLOOR DRAIN. INCLUDE IN P-TRAP A FLOAT SWITCH TO AUTOMATICALLY SHUT DOWN UNIT AS DRAINAGE SYSTEM FLOODS.
12. EXTEND FROM BACK OF UNIT, FULL SIZE OF UNIT OPENING A RETURN AIR DUCT. ELBOW DUCT UP WITH TRANSITION TO INDICATED DUCT SIZE. ROUTE DUCT ABOVE CEILING GENERALLY AS INDICATED WITH OFFSETS TO AVOID INTERFERENCES. EXTEND BRANCH DUCTS FOR CONNECTION OF DESIGNATED AIR DEVICES. INCLUDE A MANUAL VOLUME DAMPER IN EACH BRANCH DUCT AND BALANCE TO DESIGNATED AIR FLOW. A MANUAL VOLUME DAMPER SHALL BE INSTALLED IN RETURN AIR DUCT UPSTREAM OF THE OUTDOOR AIR INTAKE DUCTWORK.
13. DUCT MOUNTED IN LINE EXHAUST FAN WITH EXHAUST DUCT ROUTED FOR CONNECTION TO PLENUM ON EXHAUST AIR DISCHARGE LOUVER. INTERLOCK EXHAUST FAN WITH MOTORIZED OUTDOOR INTAKE DAMPER SUCH THAT AS DAMPER IS OPEN THE FAN SHALL BE OPERATING AND OTHERWISE NOT BE OPERATING.

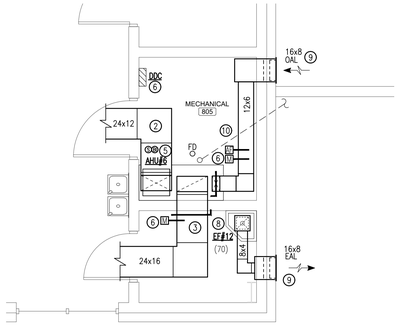

3 M2.1 — ENLARGED MECHANICAL ROOM 805 PLAN
SCALE: 1/4" = 1'-0"

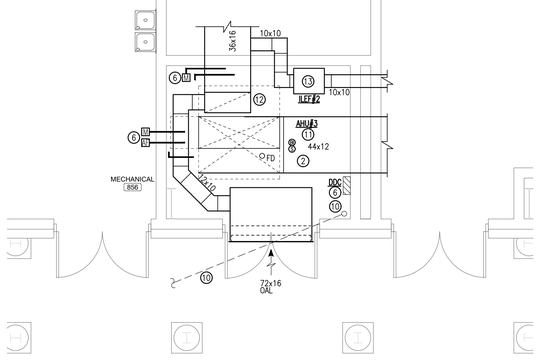

4 M2.1 — ENLARGED MECHANICAL ROOM 856 PLAN
SCALE: 1/4" = 1'-0"

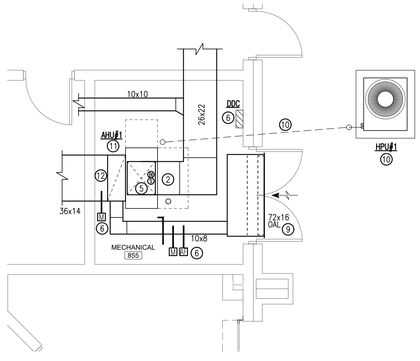

5 M2.1 — ENLARGED MECHANICAL ROOM 855 PLAN
SCALE: 1/4" = 1'-0"

ADDITIONS
TO
ROBERTSDALE HIGH SCHOOL
ROBERTSDALE, ALABAMA
FOR THE
BALDWIN COUNTY BOARD OF EDUCATION

McKEE and ASSOCIATES
ARCHITECTS, INC.
631 SOUTH HULL STREET, MONTGOMERY, ALABAMA 36104 (334) 834-9933

SHEET TITLE : HVAC DETAILS - ENLARGED MECHANICAL ROOM PLANS

MCKEE JOB # : 23-195

DRAWN BY : AWB

DATE: 10.11.2023

REVISED DATE:

REVISED DATE:

REVISED DATE:

H.M. YONGE & ASSOCIATES, INC.
CONSULTING ENGINEERS // EST. 1988
51 EAST GREGORY STREET
PENSACOLA, FLORIDA 32502
PHONE: (850)434-2661
253 ST. ANTHONY STREET
MOBILE, ALABAMA 36603
PHONE: (251)690-7446

SHEET NO. : M2.1

AWB> M:\Jobs_Active\23108 Robertsdale High School Band Room\23108M21 HVAC DETAILS.dwg 09/29/23 14:26

- M:\Jobs_Active\23108 Robertsdale High School Band Room\23108M21 HVAC DETAILS.dwg
- Tuesday, October 3, 2023 3:25:51 PM

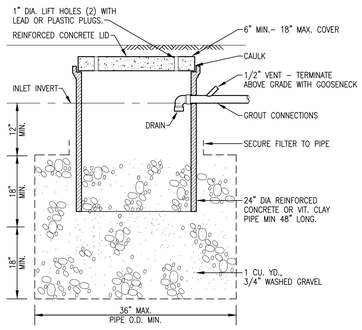

TYPICAL DRYWELL DETAIL
NOT TO SCALE

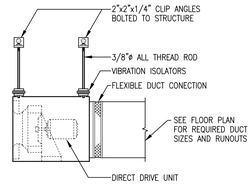

INLINE EXHAUST FAN
NOT TO SCALE

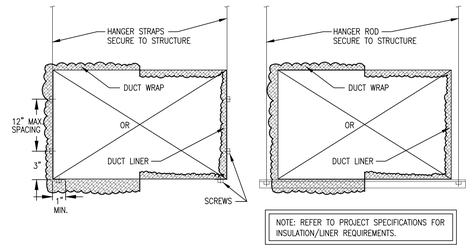

NOTE: REFER TO PROJECT SPECIFICATIONS FOR INSULATION/LINER REQUIREMENTS.

MAXIMUM HALF OF DUCT PERIMETER	PAIR AT 10 ft. SPACING		PAIR AT 8 ft. SPACING		PAIR AT 5 ft. SPACING		PAIR AT 4 ft. SPACING	
	STRAP	ROD	STRAP	ROD	STRAP	ROD	STRAP	ROD
$\frac{P}{2}$ = 72"	1"x22 ga.	1/4"	1"x22 ga.	1/4"	1"x22 ga.	1/4"	1"x22 ga.	1/4"
$\frac{P}{2}$ = 96"	1"x18 ga.	3/8"	1"x20 ga.	1/4"	1"x22 ga.	1/4"	1"x22 ga.	1/4"
$\frac{P}{2}$ = 120"	1"x16 ga.	3/8"	1"x18 ga.	3/8"	1"x22 ga.	1/4"	1"x22 ga.	1/4"
$\frac{P}{2}$ = 168"	1"x16 ga.	1/2"	1"x16 ga.	3/8"	1"x18 ga.	3/8"	1"x18 ga.	3/8"
$\frac{P}{2}$ = 168"	N/A	1/2"	1.5"x16 ga.	1/2"	1"x16 ga.	3/8"	1"x16 ga.	3/8"

WHEN STRAPS ARE LAP JOINED, USE THESE MINIMUM FASTENERS:
1"x18, 20, 22 ga. – TWO # 10
1"x16 ga. – TWO 1/4" DIA.
1.5"x16 ga. – TWO 3/8" DIA.
PLACE FASTENERS IN SERIES, NOT SIDE BY SIDE.

TYPICAL DUCT HANGER DETAIL & SCHEDULE
NOT TO SCALE

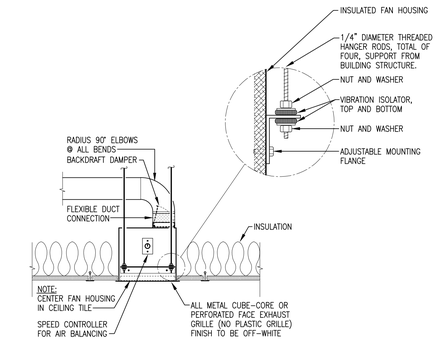

NOTE: SUPPORT RODS TO ROOF STRUCTURE – DO NOT SUPPORT FAN WITH CEILING SYSTEM

TYPICAL EXHAUST FAN DETAIL
NOT TO SCALE

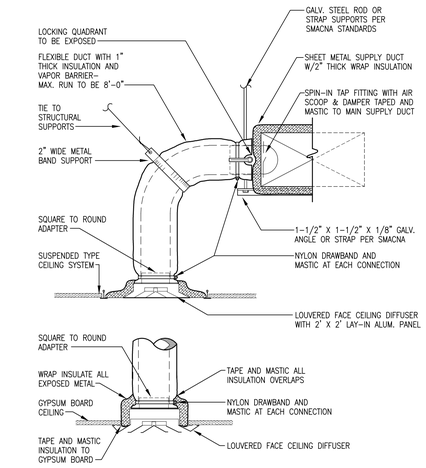

TYPICAL CEILING DIFFUSER DETAIL
NOT TO SCALE

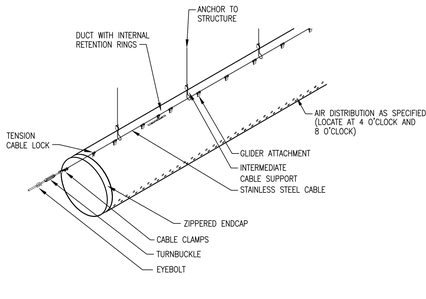

HORIZONTAL FABRIC DUCT SUSPENSION DETAILS
NOT TO SCALE

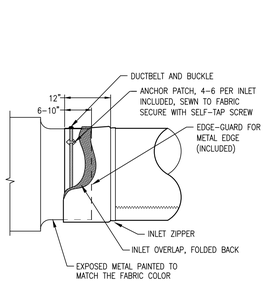

FABRIC DUCT INLET ATTACHMENT DETAIL
NOT TO SCALE

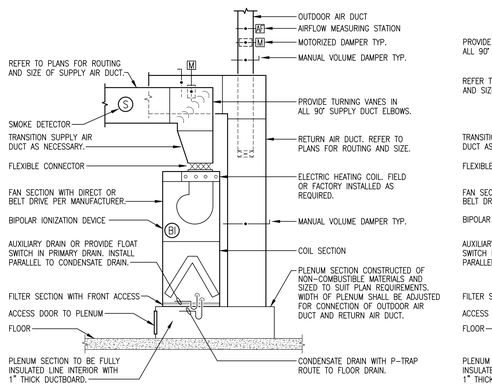

TYPICAL VERTICAL AHU DETAIL
NOT TO SCALE

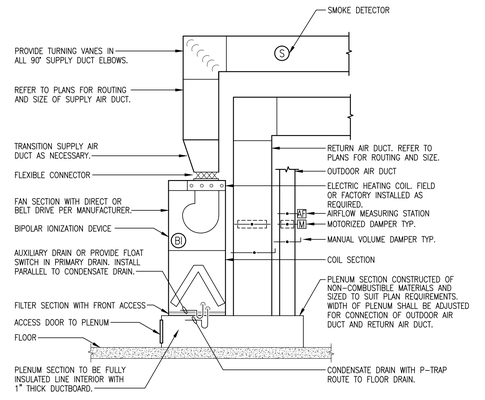

TYPICAL VERTICAL AHU DETAIL
NOT TO SCALE

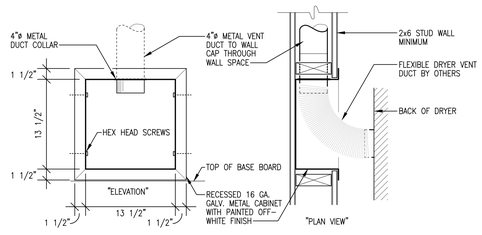

TYPICAL DRYER VENT BOX DETAIL
NOT TO SCALE

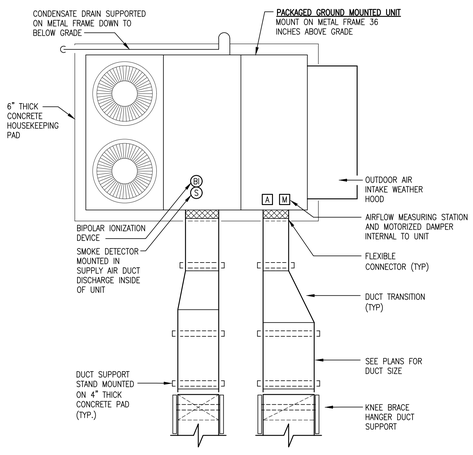

TYPICAL PACKAGED GROUND MOUNTED AIR CONDITIONING UNIT DETAIL (PLAN VIEW)
NOT TO SCALE (SCHEMATIC)

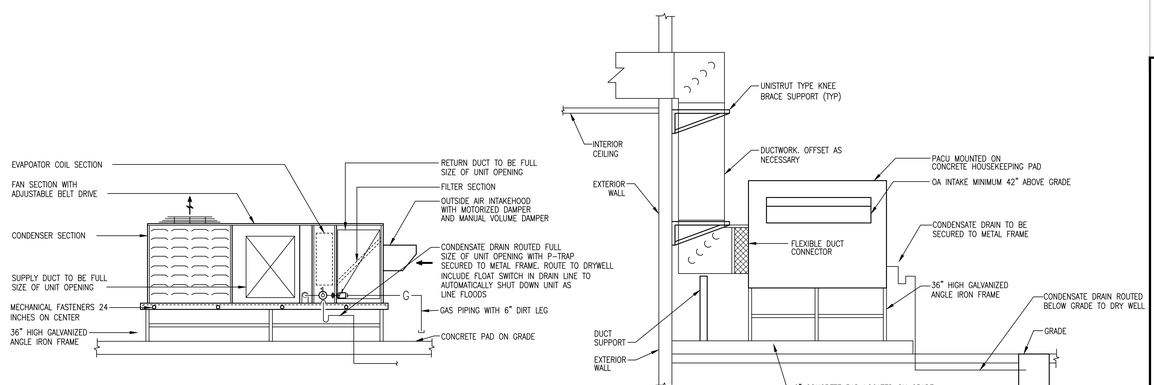

TYPICAL PACKAGED GROUND MOUNTED AIR CONDITIONING UNIT DETAIL
NOT TO SCALE

NOTE:
PACKAGED UNIT MOUNTED 36 INCHES ABOVE 6 INCH THICK CONCRETE SLAB ON GALVANIZED ANGLE IRON FRAME. SECURE UNIT TO FRAME AND FRAME TO CONCRETE PAD WITH MECHANICAL FASTENERS. PAD SHALL BE 6 INCHES LARGER THAN UNIT IN ALL DIRECTIONS. EXTEND FROM UNIT, FULL SIZE OF OPENING, A CONDENSATE DRAIN WITH P–TRAP. ROUTE CONDENSATE DRAIN ALONG FRAME TO TURN DOWN TO 6 INCHES BELOW GRADE. TERMINATE DRAIN LINE WITH DRY WELL. INCLUDE A FLOAT SWITCH IN DRAIN PAN INSIDE OF UNIT TO AUTOMATICALLY SHUT DOWN UNIT AS DRAINAGE SYSTEM FLOODS

ADDITIONS TO ROBERTSDALE HIGH SCHOOL
ROBERTSDALE, ALABAMA
FOR THE
BALDWIN COUNTY BOARD OF EDUCATION

McKEE and ASSOCIATES
ARCHITECTS, INC.
631 SOUTH HULL STREET, MONTGOMERY, ALABAMA 36104 (334) 834-9933

SHEET TITLE : HVAC DETAILS

MCKEE JOB # : 23-195

DRAWN BY : AWB

DATE: 10.11.2023

REVISED DATE:

REVISED DATE:

REVISED DATE:

SHEET NO. : M2.2

H.M. YONGE & ASSOCIATES, INC.
CONSULTING ENGINEERS // EST. 1988
51 EAST GREGORY STREET
PENSACOLA, FLORIDA 32502
PHONE: (850)434–2661
253 ST. ANTHONY STREET
MOBILE, ALABAMA 36603
PHONE: (251)690–7446

- M:\Jobs_Active\23108 Robertsdale High School Band Room\23108M22 HVAC DETAILS.dwg
- Tuesday, October 3, 2023 3:25:52 PM

AWB> M:\Jobs_Active\23108 Robertsdale High School Band Room\23108M22 HVAC DETAILS.dwg 09/27/23 13:58

AIR DEVICE SCHEDULE

MARK	CFM	MAX. NC	AIR DEVICE SIZE	DUCT CONNECTION SIZE	REMARKS (TYPE)
0–75	0–75	25	6"x6"	6"ø	CD
76–150	76–150	25	9"x6"	7"ø	CD
151–200	151–200	25	9"x9"	8"ø	CD
201–300	201–300	25	9"x9"	9"ø	CD
301–400	301–400	25	9"x12"	10"ø	CD
401–500	401–500	25	12"x12"	12"ø	CD
501–625	501–625	25	15"x12"	12"ø	CD
---	---	--	---	--	--
0–150	0–150	25	8"x8"	SEE PLANS	RAR
151–450	151–450	25	12"x12"	SEE PLANS	RAR
451–600	451–600	25	14"x14"	SEE PLANS	RAR
601–1000	601–1000	25	18"x18"	SEE PLANS	RAR
1001–2000	1001–2000	25	24"x24"	SEE PLANS	RAR
---	---	--	---	--	--
0–150	0–150	25	8"x8"	SEE PLANS	ER/TR
151–450	151–450	25	12"x12"	SEE PLANS	ER/TR
451–600	451–600	25	14"x14"	SEE PLANS	ER/TR
601–1000	601–1000	25	18"x18"	SEE PLANS	ER/TR
1001–2000	1001–2000	25	24"x24"	SEE PLANS	ER/TR

NOTES:
1. PROVIDE 24"X24" PANEL FOR ALL AIR DEVICES IN LAY-IN CEILING.
2. PROVIDE DUCT CONNECTION SIZE SHOWN UNLESS OTHERWISE NOTED ON PLANS.
3. AIR DEVICE SIZES SHOWN ON PLANS TAKE PRECEDENCE OVER THIS SCHEDULE.

MECHANICAL LEGEND

DUCTWORK

12"ø / 12"ø	DOUBLE WALL, ROUND OR FLAT OVAL SPIRAL SEAM DUCTWORK. SIZES INDICATED ARE INSIDE CLEAR DIMENSIONS.
12"x8"	RECTANGULAR DUCTWORK. SIZES INDICATED ARE INSIDE CLEAR DIMENSIONS.
12"ø	ROUND METAL SNAPLOCK DUCTWORK. SIZES INDICATE ARE INSIDE CLEAR DIMENSIONS.
	FACTORY FABRICATED AND INSULATED SOUND ATTENUATING FLEXIBLE ROUND DUCT. MAX LENGTH SHALL BE 8 FT.
	SQUARE THROAT ELBOW IN RECTANGULAR DUCTWORK WITH DOUBLE WALL TURNING VANES. PROVIDE FOR ALL DUCTWORK 12" AND LARGER IN THE TURNING DIRECTION.
	RECTANGULAR BRANCH DUCT TAKEOFF FROM RECTANGULAR MAIN DUCT. TAKEOFF SHALL BE MADE WITH A 45° COLLAR. SEE DETAIL.
	LONG RADIUS ELBOW IN RECTANGULAR OR ROUND DUCT. PROVIDE FOR ALL DUCTWORK SMALLER THAN 12" IN THE TURNING DIRECTION.
	MITERED ELBOW "VARD BEND" IN SINGLE WALL ROUND OR FLAT OVAL SPIRAL SEAM DUCT. PROVIDE WITH DOUBLE WALL TURNING VANES.
	BRANCH CONNECTION IN ROUND OR FLAT OVAL SPIRAL SEAM DUCT MADE WITH A CONICAL TEE FITTING.
	ROUND BRANCH DUCT TAKEOFF FROM RECTANGULAR MAIN DUCT. BRANCH DUCT SHALL BE FLEXIBLE ROUND OR ROUND SNAPLOCK DUCT AS INDICATED. ROUND DUCT TAP-IN SHALL BE MADE WITH SIDE TAKEOFF FITTING WITH MANUAL VOLUME DAMPER. SEE DETAIL.
	MANUAL VOLUME DAMPER IN RECTANGULAR OR ROUND CUT. PROVIDE WITH LOCKING QUADRANT REGULATOR.
M	AUTOMATIC CONTROL DAMPER. MOTORIZED FULLY MODULATING DAMPER.
	RECTANGULAR OR FLAT OVAL TO ROUND DUCT TRANSITION PER SMACNA DUCT CONSTRUCTION STANDARDS.
FD S	FIRE DAMPER(FD); SMOKE DAMPER(S); FIRE/SMOKE DAMPER(F/S). PROVIDE WITH DUCT ACCESS DOOR AND CLOSURE ANGLES. SEE DETAIL.
	UNDERCUT DOOR ⅜" TO ALLOW FOR AIRFLOW IN THE DIRECTION INDICATED.
T	THERMOSTAT WITH EQUIPMENT NUMBER SERVED – MOUNT AT 48" AFF.
TS	TEMPERATURE SENSOR
S	SMOKE DETECTOR

ABBREVIATIONS

@	AT
AD	ACCESS DOOR
AFMS	AIRFLOW MEASURING STATION
AH	AIR HANDLING UNIT
AFF	ABOVE FINISHED FLOOR
ARI	AIR CONDITIONING & REFRIGERATION INSTITUTE
ASHRAE	AMERICAN SOCIETY OF HEATING, REFRIGERATION, & AIR CONDITIONING ENGINEERS
BTUH	BRITISH THERMAL UNIT PER HOUR
CD	CEILING DIFFUSER
CFM	CUBIC FEET PER MINUTE
DCDU	DUCTLESS CONDENSING UNIT
DDC	DIRECT DIGITAL CONTROL
EAL	EXHAUST AIR LOUVER
EAT	ENTERING AIR TEMPERATURE
EDB	ENTERING DRY BULB
EF	EXHAUST FAN
ESP	EXTERNAL STATIC PRESSURE
EWB	ENTERING WET BULB
FLA	FULL LOAD AMPS
°F	FAHRENHEIT
HPU	HEAT PUMP UNIT
HP	HORSEPOWER
IAQ	INDOOR AIR QUALITY
MCA	MINIMUM CIRCUIT AMPACITY
MOCP	MAXIMUM OVERCURRENT PROTECTION
OAL	OUTSIDE AIR LOUVER
PACU	PACKAGED A/C UNIT
RAR	RETURN AIR REGISTER
RLA	RATED LOAD AMPS
SD	SMOKE DAMPER
TG	TRANSFER GRILLE
W	WATTS

PACKAGED AIR CONDITIONING UNIT W/ GAS HEAT SCHEDULE

MARK #	AHU DATA: NOMINAL TONS	TOTAL CFM	OA CFM	ESP	MOTOR HP	COOLING CAPACITY @ DESIGN CONDITIONS: EAT °F(db/wb)	LAT °F(db/wb)	AMBIENT °F(db/wb)	TOTAL MBH	SENSIBLE MBH	MIN. EER @ ARI	MIN. IEER @ ARI	# OF COMPR.	COMPR. RLA (EACH)	# OF FANS	OUTDOOR FAN FLA (EACH)	GAS HEATER DATA: OUTPUT MBH	INPUT (MBH)	# OF STAGES	FILTER TYPE	ELECTRICAL DATA: VOLTS	Hz	PHASE	MCA	MOCP	AREA SERVED	(33)	REMARKS
PACU#1	10	3,500	440	1.0"	3	80/67	55/55	94/77	122	90	11.0	12.7	2	1 @ 13.2 1 @ 5.8	1	1.4 A	192	240	MOD.	2" PLEATED	460	60	3	30 A	40 A	PRACTICE FLD	SZVAV	2 3 4 5 6 7 8 9 10 11 12 13 14 15 16 17 18 19 20 21 22 23 24 25 26 27 28 29 30 31 32
PACU#2	10	3,500	440	1.0"	3	80/67	55/55	94/77	122	90	11.0	12.7	2	1 @ 13.2 1 @ 5.8	1	1.4 A	192	240	MOD.	2" PLEATED	460	60	3	30 A	40 A	PRACTICE FLD	SZVAV	2 3 4 5 6 7 8 9 10 11 12 13 14 15 16 17 18 19 20 21 22 23 24 25 26 27 28 29 30 31 32
PACU#3	15	5,250	875	1.0"	3	80/67	55/55	94/77	185	137	10.8	12.2	2	1 @ 16.7 1 @ 8.2	2	1.1 A	324	400	MOD.	2" PLEATED	460	60	3	41 A	50 A	GYMNASIUM	SZVAV	2 3 4 5 6 7 8 9 10 11 12 13 14 15 16 17 18 19 20 21 22 23 24 25 26 27 28 29 30 31 32
PACU#4	15	5,250	875	1.0"	3	80/67	55/55	94/77	185	137	10.8	12.2	2	1 @ 16.7 1 @ 8.2	2	1.1 A	324	400	MOD.	2" PLEATED	460	60	3	41 A	50 A	GYMNASIUM	SZVAV	2 3 4 5 6 7 8 9 10 11 12 13 14 15 16 17 18 19 20 21 22 23 24 25 26 27 28 29 30 31 32

NOTES:
1. PROVIDE WITH SINGLE POINT POWER CONNECTION.
2. SMOKE DETECTORS WITH WEATHERPROOF COVER SHALL BE MOUNTED IN THE SUPPLY AND RETURN AIR DUCT SYSTEM. DETECTORS SHALL BE PROVIDED BY DIV. 16, INSTALLED BY DIV. 15, AND WIRED BY DIV. 16.
3. EXTERNAL STATIC PRESSURE DROP DOES NOT INCLUDE FILTERS OR AUXILIARY HEATER.
4. PROVIDE WITH STANDARD MOTOR.
5. PROVIDE WITH LOW AMBIENT KIT FOR COOLING OPERATION DOWN TO 0°F.
6. PROVIDE WITH ANTI-SHORT CYCLE TIMER.
7. UNIT SHALL HAVE SINGLE ZONE VARIABLE AIR VOLUME CONTROL.
8. REFRIGERANT TYPE SHALL BE R-410A.
9. ENERGY EFFICIENCY RATIO (EER) AND IEER RATED @ ARI CONDITIONS.
10. PROVIDE WITH FACTORY INSTALLED CONDENSER COIL GUARDS.
11. PROVIDE WITH FACTORY INSTALLED CONDENSER COIL GUARDS.
12. PROVIDE WITH STAINLESS STEEL IAQ DRAIN PAN SLOPED IN TWO DIRECTIONS.
13. FILTERS SHALL HAVE A MINIMUM MERV 8 RATING.
14. TRAP CONDENSATE AT UNIT AND ROUTE FULLY INSULATED CONDENSATE DRAIN LINE TO TERMINATE AS SHOWN ON PLANS. CONDENSATE DRAIN LINE SHALL BE COPPER OR PVC. SEE CONDENSATE DRAIN DETAIL. PROVIDE PADS, BASE RAILS, AND/OR CURBS OF SUFFICIENT HEIGHT TO ENABLE CORRECT TRAP DEPTH.
15. PROVIDE FACTORY INSTALLED CONDENSATE OVERFLOW SWITCH IN PRIMARY DRAIN PAN IN ACCORDANCE WITH UL508 TO SHUT DOWN UNIT PRIOR TO PAN OVERFLOW.
16. MODULATING DAMPER IN OUTSIDE AIR INTAKE SHALL REMAIN OPEN DURING ALL OCCUPIED TIMES AND SHALL BE CLOSED OTHERWISE. DAMPER SHALL MODULATE BETWEEN MINIMUM AND MAXIMUM POSITIONS BASED ON SPACE CO2 LEVELS (1,000 PPM) DURING OCCUPIED HOURS. PROVIDE NECESSARY AIRFLOW CONTROLS FOR VARYING OUTSIDE AIR REQUIREMENTS.
17. PROVIDE UNIT WITH FACTORY PROVIDED HUMIDITY SENSOR FOR SPACE HUMIDITY CONTROL VIA MODULATING HOT GAS REHEAT.
18. UNIT SHALL HAVE A MINIMUM OF 5 STAGES OF COOLING OR VARIABLE SPEED COMPRESSOR CONTROL.
19. BASIS OF DESIGN: TRANE YSJ.
20. PROVIDE WITH MANUFACTURER'S ON BOARD CONTROLLER FOR CONTROL OF ALL UNIT OPERATIONS. CONTROLLER SHALL INTERFACE WITH SCHOOL BOARD'S EXISTING CONTROLS PROVIDER (SIEMENS) VIA BACNET CARD.
    PROVIDE WITH SUPPLY FAN FAILURE SWITCH. IF AIRFLOW IS NOT PROVEN BY THE DP SWITCH WITHIN 40 SECONDS, THE CONTROLLER SHALL SHUT DOWN UNIT AND SEND AN ERROR MESSAGE TO THE BUILDING AUTOMATION SYSTEM (BAS).
21. PROVIDE WITH PHASE MONITOR.
22. EQUIPMENT SHALL BE PAD MOUNTED ON GRADE. GENERAL CONTRACTOR SHALL PROVIDE CONCRETE HOUSEKEEPING PAD AND ENSURE PAD IS LEVEL PRIOR TO EQUIPMENT INSTALLATION.
23. PROVIDE WITH THE FOLLOWING EXTENDED MANUFACTURER WARRANTIES: PARTS (2–5YR.), LABOR (2–5YR.), & COMPRESSOR (6–10YR.).
24. PROVIDE WITH FACTORY INSTALLED CO2 SENSOR WIRING.
25. PROVIDE WITH TOOL-LESS HAIL GUARDS.
26. PROVIDE WITH ENHANCED DEHUMIDIFICATION OPERATION TO ALLOW MODULATION OF AIRFLOW AND COMPRESSOR OPERATION FOR ADDITIONAL MOISTURE REMOVAL.
27. PROVIDE WITH FREEZE STAT.
28. PROVIDE WITH MANUFACTURER'S ZONE SENSOR FOR SINGLE ZONE VAV OPERATION. (2-SPEED FAN OPERATION IS NOT ACCEPTABLE).
29. PROVIDE WITH HIGH SHORT CIRCUIT CURRENT RATING. SEE SPECIFICATIONS.
30. PROVIDE WITH ZONE SENSOR BY UNIT MANUFACTURER.
31. PROVIDE CONDENSER COIL WITH CORROSION PROTECTION COATING PASSING 5,000-HOUR SALT SPRAY TEST IN ACCORDANCE WITH ASTM B117.
32. CONTRACTOR SHALL FIELD INSTALL AIR PURIFICATION DEVICE (BI-POLAR IONIZATION). REFER TO SPECIFICATIONS. BI-POLAR DEVICE SHALL DE-ENERGIZE WHEN SUPPLY FAN IS OFF.
33. UNIT CONTROLS SHALL BE INTEGRAL TO UNIT FOR SELF SUSTAINED CONTROL. COMPRESSOR STAGING AND FAN SPEEDS SHALL BE BY INTEGRALS.

SPLIT SYSTEM HEAT PUMP UNIT SCHEDULE

MARK #	AHU DATA (13)(15): NOMINAL TONS	TOTAL CFM	OA CFM	ESP	MOTOR HP	COOLING CAPACITY @ DESIGN CONDITIONS: EAT °F(db/wb)	LAT °F(db/wb)	AMBIENT °F(db/wb)	TOTAL BTU/HR	SENSIBLE BTU/HR	HEATING CAPACITY @ ARI STANDARD CONDITIONS: EDB °F	AMBIENT °F	TOTAL BTU/HR	MIN. SEER (14)	MIN. EER (14)	MIN. COP/HSPF (23)	AHU ELECTRICAL DATA: kW	# OF STAGES	VOLTS	Hz	PHASE	INDOOR MOCP	INDOOR MCA	HEAT PUMP ELECTRICAL DATA: COMPR. RLA QTY./AMPS	OUTDOOR FAN FLA QTY./AMPS	VOLTS	Hz	PHASE	OUTDOOR MCA	OUTDOOR MOCP	AREA SERVED	REMARKS
AHU#1/ HPU#1	7.5	2,685	320	0.75"	3	80/67	55/55	94/77	95,000	76,000	70	47	74,000	NA	11.0	3.3	15	2	460	60	3	30	27	2 @ 6.1	1 @ 1.1	460	60	3	15	20	ENSEMBLE	VERTICAL UPFLOW; DRAW-THRU	2 3 4 5 6 7 8 9 10 11 12 13 14 15 16 17 18 19 20 21 22 23 24 25 26 27 28
AHU#2/ HPU#2	10.0	3,650	440	0.75"	3	80/67	55/55	94/77	122,000	94,000	70	47	105,000	NA	11.0	3.3	25	2	460	60	3	45	44	2 @ 7.2	1 @ 2.2	460	60	3	18	25	BAND ROOM	VERTICAL UPFLOW; DRAW-THRU	2 3 4 5 6 7 8 9 10 11 12 13 14 15 16 17 18 19 20 21 22 23 24 25 26 27 29
AHU#3/ HPU#3	10.0	3,455	440	0.75"	3	80/67	55/55	94/77	122,000	94,000	70	47	105,000	NA	11.0	3.3	25	2	460	60	3	45	44	2 @ 7.2	1 @ 2.2	460	60	3	18	25	BAND ROOM	VERTICAL UPFLOW; DRAW-THRU	2 3 4 5 6 7 8 9 10 11 12 13 14 15 16 17 18 19 20 21 22 23 24 25 26 27 29
AHU#4/ HPU#4	3.0	1,105	150	0.50"	1/2	80/67	55/55	93/77	36,000	25,200	70	47	35,000	15	NA	8.8	7.6	1	460	60	3	13	15	5.7	1 @ 0.4	460	60	3	8	15	PRACTICE DRESSING RM	VERTICAL UPFLOW; DRAW-THRU	2 3 4 5 6 9 10 11 12 13 16 17 18 23 24 25 26 27 30
AHU#5/ HPU#5	4.0	1,290	150	0.50"	3/4	80/67	55/55	93/77	48,000	33,600	70	47	47,000	15	NA	8.8	9.6	2	460	60	3	17	20	6.4	1 @ 0.6	460	60	3	9	15	GYM DRESSING RM	VERTICAL UPFLOW; DRAW-THRU	2 3 4 5 6 9 10 11 12 13 16 17 18 23 24 25 26 27 30
AHU#6/ HPU#6	5.0	1,920	250	0.50"	1	80/67	55/55	93/77	60,000	42,000	70	47	59,000	15	NA	8.8	14.4	2	460	60	3	26	30	7.6	1 @ 0.7	460	60	3	10	15	GYM LOBBY	VERTICAL UPFLOW; DRAW-THRU	2 3 4 5 6 9 10 11 12 13 16 17 18 19 23 24 25 26 27 30

NOTES:
1. PROVIDE WITH FACTORY INSTALLED AUXILIARY ELECTRIC STRIP HEAT.
2. AIR HANDLER TO HAVE SINGLE POINT POWER CONNECTION. PROVIDE TRANSFORMER AS NECESSARY FOR SMALLER UNITS.
3. TRAP CONDENSATE AT UNIT AND ROUTE CONDENSATE DRAIN LINE TO FLOOR DRAIN. CONDENSATE DRAIN LINE SHALL BE COPPER OR PVC. SEE CONDENSATE DRAIN DETAIL. PROVIDE PADS, BASE RAILS, AND/OR CURBS OF SUFFICIENT HEIGHT TO ENABLE CORRECT TRAP DEPTH.
4. PROVIDE WITH ANTI SHORT-CYCLE TIMER.
5. PROVIDE WITH LOW AMBIENT KIT.
6. INSTALL FLOAT SWITCH IN PRIMARY DRAIN PAN IN ACCORDANCE WITH UL508 TO SHUT DOWN UNIT PRIOR TO PAN OVERFLOW.
7. AHU FAN SHALL BE VARIABLE SPEED TYPE.
8. PROVIDE WITH APR VALVE ON LEAD CIRCUIT FOR HOT GAS BYPASS OPERATION.
9. REFRIGERANT TYPE SHALL BE R-410A.
10. UNIT CONTROLS SHALL BE BY DDC SYSTEM. REFER TO SPECIFICATIONS.
11. CONTRACTOR SHALL COORDINATE VOLTAGE AND PHASE OF EQUIPMENT WITH ELECTRICAL CONTRACTOR PRIOR TO ORDERING EQUIPMENT.
12. PROVIDE EVAPORATOR, CONDENSER, & HOT GAS REHEAT COILS WITH CORROSION PROTECTIVE COATING. COATING SHALL PASS 5,000 HOUR SALT SPRAY TEST PER ASTM B117.
13. PROVIDE 3 PHASE HEATER.
14. EER/SEER SHOWN IS RATED AT AHRI CONDITIONS.
15. EXTERNAL STATIC PRESSURE SHOWN DOES NOT INCLUDE PRESSURE DROP THRU ELECTRIC HEATER, COIL, OR FILTERS.
16. AHU FAN SHALL BE CONSTANT VOLUME TYPE.
17. ELECTRIC HEATER kW SHOWN IS FOR NOMINAL VOLTAGE. DE-RATE FOR ACTUAL VOLTAGE.
18. PROVIDE WITH CONDENSER HAIL/COIL GUARDS.
19. PROVIDE WITH DUCT MOUNTED SMOKE DETECTORS IN SUPPLY AIR LOCATIONS.
20. PROVIDE WITH STANDARD MOTOR.
21. PROVIDE WITH NON-CORROSIVE, DOUBLE SLOPED DRAIN PAN.
22. PROVIDE WITH DUAL REFRIGERATION CIRCUITS. AIR HANDLER SHALL HAVE AN INTERTWINED COIL.
23. MINIMUM HSPF/COP INDICATED IS FOR 47°F OUTDOOR DRY BULB TEMPERATURE.
24. PROVIDE WITH 2" THICK THROWAWAY PLEATED TYPE FILTERS. FILTERS SHALL BE MINIMUM OF MERV 7 AS RATED BY ASHRAE 52.2.
25. CONTRACTOR SHALL FIELD INSTALL AIR PURIFICATION DEVICE (BI-POLAR IONIZATION). REFER TO SPECIFICATIONS. BI-POLAR DEVICE SHALL DE-ENERGIZE WHEN SUPPLY FAN IS OFF.
26. HEAT PUMP SHALL SERVE AS STAGE 1 HEATING. ELECTRIC HEATER SHALL SERVE AS STAGE 2 HEATING AND DEFROST CYCLE. DURING STAGE 2 HEATING, THE HEAT PUMP AND ELECTRIC HEAT SHALL OPERATE SIMULTANEOUSLY. IF SPACE TEMPERATURE CAN BE MAINTAINED THRU HEAT PUMP OPERATION ONLY, CONTROLS SHALL PREVENT ELECTRIC HEAT FROM OPERATING. COORDINATE WITH CONTROLS CONTRACTOR.
27. PROVIDE WITH 2-POSITION MOTORIZED DAMPER IN RETURN AIR DUCT.
28. BASIS OF DESIGN – TRANE: OUTDOOR (TWA090), INDOOR (TWE090)
29. BASIS OF DESIGN – TRANE: OUTDOOR (TWA120), INDOOR (TWE120)
30. BASIS OF DESIGN – TRANE: OUTDOOR (4TWA7), INDOOR (TAM9)

DUCTLESS SPLIT AIR CONDITIONING UNIT SCHEDULE

MARK	AHU DATA: TOTAL CFM	MOTOR	COOLING CAPACITY @ AHRI STANDARD CONDITIONS: EDB	EWB	AMBIENT	COOLING BTU/HR	REFR. TYPE	HEATING CAPACITY @ AHRI STANDARD CONDITIONS: EDB	AMBIENT	HEATING BTU/HR	MIN. SEER	COMPR. RLA	OUTDOOR FAN FLA	INDOOR MCA	OUTDOOR UNIT MCA	OUTDOOR UNIT MOCP	ELEC. DATA (V/Hz/PH)	SERVES	REMARKS
DAHU#1/ DCDU#1	265	0.3 FLA	80°F	67°F	95°F/75°F	9,000	R-410	70	47	11,000	20.0	7 A	0.5 A	1.0 A	9 A	15 A	208/60/1	UTILITY 854	2 3 4 5 6 7 8 10 11
DAHU#2/ DCDU#2	250	0.19 FLA	80°F	67°F	95°F/75°F	12,000	R-410	NA	NA	NA	20.0	7 A	0.5 A	1.0 A	11 A	28 A	208/60/1	ELEC/DATA 831	1 2 3 4 5 6 7 9 10
DAHU#3/ DCDU#3	250	0.19 FLA	80°F	67°F	95°F/75°F	12,000	R-410	NA	NA	NA	20.0	7 A	0.5 A	1.0 A	11 A	28 A	208/60/1	ELEC 806	1 2 3 4 5 6 7 9 10

NOTES:
1. PROVIDE WALL-MOUNTED INDOOR UNIT COMPLETE WITH A WALL MOUNTED THERMOSTAT.
2. COMPRESSOR SHALL BE INVERTER DRIVEN TYPE.
3. INDOOR UNIT RECEIVES POWER FROM OUTDOOR UNIT THRU FIELD SUPPLIED INTERCONNECTED WIRING. COORDINATE WIRING REQUIREMENTS WITH ELECTRICAL CONTRACTOR. MECHANICAL CONTRACTOR SHALL BE RESPONSIBLE FOR HAVING ELECTRICAL CONTRACTOR PROVIDING POWER TO INDOOR UNIT.
4. ROUTE FULLY INSULATED CONDENSATE DRAIN LINE TO FLOOR DRAIN IN SAME SPACE OR MOP SINK.
5. PROVIDE WITH DRAIN PAN LEVEL SENSOR TO SHUT DOWN UNIT PRIOR TO PAN OVERFLOW. SENSOR SHALL BE PROVIDED BY UNIT MANUFACTURER.
6. AIRFLOW SHOWN IS FOR "MEDIUM" CFM SETTING WITH DRY COIL CONDITION.
7. PROVIDE WITH 7 YEAR COMPRESSOR AND 5 YEAR PARTS MANUFACTURER WARRANTY.
8. BASIS OF DESIGN: MITSUBISHI SLZ-KF09/SUZ-KA09.
9. BASIS OF DESIGN: MITSUBISHI PKA-A12/PUY-A12.
10. FAN MOTORS 1/12 HORSEPOWER OR GREATER AND LESS THAN 1 HORSEPOWER SHALL BE ELECTRONICALLY COMMUTATED OR HAVE A MINIMUM EFFICIENCY OF 70% WHEN RATED IN ACCORDANCE WITH DOE 10 CFR 431. THESE MOTORS SHALL ALSO HAVE THE MEANS TO ADJUST MOTOR SPEED FOR EITHER BALANCING OR REMOTE CONTROL. BELT DRIVEN FANS MAY USE SHEAVE ADJUSTMENTS FOR AIR FLOW BALANCING IN LIEU OF VARYING MOTOR SPEED.
11. PROVIDE CEILING-MOUNTED INDOOR UNIT COMPLETE WITH A WALL MOUNTED THERMOSTAT.

ELECTRIC UNIT HEATER SCHEDULE

MARK EUH#	CFM	HEATING CAPACITY: INPUT KW	STAGES	OUTPUT BTU/HR	ELECTRICAL DATA: AMPS	VOLTS	Hz	PHASE	REMARKS
1	65	3.0	1 @ 3 KW	10,200	10.8	277	60	1	(1)

NOTES:
1. UNIT HEATER IS TO BE WALL MOUNTED. UNIT SHALL BE PROVIDED WITH INTEGRAL CONTROLS. PROVIDE ALL ACCESSORIES FOR INSTALLATION ON WALL.

FAN SCHEDULE

MARK #	TOTAL CFM	TSP IN WC	MAX RPM	TYPE DRIVE (2)	TYPE FAN (1)	CONTROL (8)	INTERLOCK WITH	MOTOR HP/WATTS	MAX SONES	ELECTRICAL DATA: VOLTS	Hz	PHASE	FAN SERVICE	REMARKS
EF#1	70	0.5"	1080	DD	CEF	INTM.	LIGHT SWITCH	80 W	2.5	120	60	1	UTILITY 854	3 4 5 6 7 9
EF#2	100	0.5"	1080	DD	CEF	INTM.	LIGHT SWITCH	90 W	5.5	120	60	1	TOILET 845A	3 4 5 6 7 9
EF#3	150	0.5"	1080	DD	CEF	INTM.	LIGHT SWITCH	90 W	5.5	120	60	1	GENTS 844	3 4 5 6 7 9
EF#4	70	0.5"	1080	DD	CEF	INTM.	LIGHT SWITCH	80 W	2.5	120	60	1	JANITOR 843	3 4 5 6 7 9
EF#5	150	0.5"	1080	DD	CEF	INTM.	LIGHT SWITCH	90 W	5.5	120	60	1	LADIES 842	3 4 5 6 7 9
EF#6	210	0.5"	1080	DD	CEF	INTM.	LIGHT SWITCH	135 W	5.5	120	60	1	TOILET 830A	3 4 5 6 7 9
EF#7	210	0.5"	1080	DD	CEF	INTM.	LIGHT SWITCH	135 W	5.5	120	60	1	TOILET 827A	3 4 5 6 7 9
EF#8	50	0.5"	1080	DD	CEF	INTM.	LIGHT SWITCH	80 W	2.5	120	60	1	JANITOR 820	3 4 5 6 7 9
EF#9	210	0.5"	1080	DD	CEF	INTM.	LIGHT SWITCH	135 W	5.5	120	60	1	TOILET 815	3 4 5 6 7 9
EF#10	210	0.5"	1080	DD	CEF	INTM.	LIGHT SWITCH	135 W	5.5	120	60	1	TOILET 814	3 4 5 6 7 9
EF#11	70	0.5"	1080	DD	CEF	INTM.	LIGHT SWITCH	80 W	2.5	120	60	1	JANITOR 804	3 4 5 6 7 9
EF#12	250	0.5"	1080	DD	CEF	INTM.	AHU#6	135 W	5.5	120	60	1	TOILET 803	3 4 5 6 7 9
EF#13	250	0.5"	1080	DD	CEF	INTM.	AHU#6	135 W	5.5	120	60	1	TOILET 801	3 4 5 6 7 9
ILEF#1	400	0.5"	900	DD	ILF	INTM.	AHU#2	1/4 HP	2.0	120	60	1	AHU#2	3 4 5 6
ILEF#2	400	0.5"	900	DD	ILF	INTM.	AHU#3	1/4 HP	2.0	120	60	1	AHU#3	3 4 5 6

NOTES:
1. CEF – CEILING MOUNTED
   ILF – INLINE FAN
   UVS– UTILITY VENT SET
2. DD – DIRECT DRIVE
   BD – BELT DRIVE
3. PROVIDE WITH FAN SPEED CONTROLLER. CONTROLLER SHALL BE MOUNTED TO FAN.
4. PROVIDE WITH INTEGRAL DISCONNECT.
5. PROVIDE MOTOR WITH THERMAL OVERLOAD.
6. PROVIDE WITH INTEGRAL GRAVITY BACKDRAFT DAMPER.
7. PROVIDE WITH ALUMINUM GRILLE. PLASTIC GRILLES WILL NOT BE ACCEPTABLE.
8. CONT. – FAN FUNS CONTINUOUSLY DURING OCCUPIED HOURS SUBJECT TO INTERLOCK CONTROL
   INTM. – INTERMITTENTLY
9. FAN MOTORS 1/12 HORSEPOWER OR GREATER AND LESS THAN 1 HORSEPOWER SHALL BE ELECTRONICALLY COMMUTATED OR HAVE A MINIMUM EFFICIENCY OF 70% WHEN RATED IN ACCORDANCE WITH DOE 10 CFR 431. THESE MOTORS SHALL ALSO HAVE THE MEANS TO ADJUST MOTOR SPEED FOR EITHER BALANCING OR REMOTE CONTROL. BELT DRIVEN FANS MAY USE SHEAVE ADJUSTMENTS FOR AIR FLOW BALANCING IN LIEU OF VARYING MOTOR SPEED.

ADDITIONS
TO
ROBERTSDALE HIGH SCHOOL
ROBERTSDALE, ALABAMA
FOR THE
BALDWIN COUNTY BOARD OF EDUCATION

McKEE and ASSOCIATES
ARCHITECTS, INC.
631 SOUTH HULL STREET, MONTGOMERY, ALABAMA 36104 (334) 834-9933

SHEET TITLE : HVAC LEGEND AND SCHEDULES

MCKEE JOB # : 23-195

DRAWN BY : AWB

DATE: 10.11.2023

REVISED DATE:

REVISED DATE:

REVISED DATE:

H.M. YONGE & ASSOCIATES, INC.
CONSULTING ENGINEERS // EST. 1988
51 EAST GREGORY STREET, PENSACOLA, FLORIDA 32502, PHONE: (850)434-2661
253 ST. ANTHONY STREET, MOBILE, ALABAMA 36603, PHONE: (251)690-7446

SHEET NO. : M3.1

- M:\Jobs_Active\23108 Robertsdale High School Band Room\23108M31 HVAC SCHEDULES.dwg
- Tuesday, October 3, 2023 3:25:53 PM

AWB> M:\Jobs_Active\23108 Robertsdale High School Band Room\23108M31 HVAC SCHEDULES.dwg 09/29/23 15:11

SEQUENCE OF OPERATION

PACKAGED AIR CONDITIONING UNIT W/ GAS HEAT:

BUILDING AUTOMATION SYSTEM INTERFACE:

THE BUILDING AUTOMATION SYSTEM (BAS) SHALL SEND THE CONTROLLER OCCUPIED BYPASS, PRE-COOL, OCCUPIED/UNOCCUPIED AND HEAT/COOL MODES. IF A BAS IS NOT PRESENT, OR COMMUNICATION IS LOST WITH THE BAS THE CONTROLLER SHALL OPERATE USING DEFAULT MODES AND SETPOINTS. BOTH UNITS SHALL WORK IN TANDEM TO SATISFY TEMPERATURE AND HUMIDITY REQUIREMENTS.

OCCUPIED:

THE DX COOLING SHALL CONTROL TO MAINTAIN THE ACTIVE DISCHARGE AIR TEMPERATURE SETPOINT. IF ECONOMIZING IS ENABLED, THE OUTDOOR AIR OR MIXED AIR DAMPERS SHALL MODULATE TO MAINTAIN THE DISCHARGE AIR TEMPERATURE SETPOINT AND THE RELIEF AIR DAMPER SHALL TRACK THE MIXED AIR DAMPERS. THE DISCHARGE AIR TEMPERATURE SETPOINT SHALL BE DYNAMICALLY RESET BASED ON THE DEVIATION OF ACTUAL SPACE TEMPERATURE FROM THE ACTIVE SPACE TEMPERATURE SETPOINT. IF THE DISCHARGE AIR TEMPERATURE SENSOR FAILS, THE DX COOLING SHALL CONTROL TO MAINTAIN THE ACTIVE SPACE TEMPERATURE SETPOINT AND AN ALARM SHALL ANNUNCIATE AT THE BAS. IF THE DISCHARGE AIR TEMPERATURE SENSOR AND THE SPACE TEMPERATURE SENSOR FAIL, THE DX COOLING SHALL BE DISABLED, AND AN ALARM SHALL ANNUNCIATE AT THE BAS.

OPTIMAL START:

THE BAS SHALL MONITOR THE SCHEDULED OCCUPIED TIME, OCCUPIED SPACE SETPOINTS AND SPACE TEMPERATURE TO CALCULATE WHEN THE OPTIMAL START OCCURS.

PRE-COOL MODE:

DURING OPTIMAL START, IF THE SPACE TEMPERATURE IS ABOVE THE OCCUPIED COOLING SETPOINT, PRE-COOL MODE SHALL BE ACTIVATED. WHEN PRE-COOL IS INITIATED, THE UNIT SHALL ENABLE THE FAN AND COOLING. THE OUTSIDE AIR DAMPER SHALL REMAIN CLOSED. WHEN THE SPACE TEMPERATURE REACHES OCCUPIED COOLING SETPOINT (ADJ.), THE UNIT SHALL TRANSITION TO THE OCCUPIED MODE.

OPTIMAL STOP:

THE BAS SHALL MONITOR THE SCHEDULED UNOCCUPIED TIME, OCCUPIED SETPOINTS AND SPACE TEMPERATURE TO CALCULATE WHEN THE OPTIMAL STOP OCCURS. WHEN THE OPTIMAL STOP MODE IS ACTIVE THE UNIT CONTROLLER SHALL MAINTAIN THE SPACE TEMPERATURE TO THE SPACE TEMPERATURE OFFSET SETPOINT. OUTSIDE AIR DAMPER SHALL REMAIN ENABLED TO PROVIDE MINIMUM VENTILATION.

OCCUPIED BYPASS:

THE BAS SHALL MONITOR THE STATUS OF THE ON AND CANCEL BUTTONS OF THE SPACE TEMPERATURE SENSOR. WHEN AN OCCUPIED BYPASS REQUEST IS RECEIVED FROM A SPACE SENSOR, THE UNIT SHALL TRANSITION FROM ITS CURRENT OCCUPANCY MODE TO OCCUPIED BYPASS MODE AND THE UNIT SHALL MAINTAIN THE SPACE TEMPERATURE TO THE OCCUPIED SETPOINTS (ADJ.).

HEAT/COOL MODE:

WHEN THE SPACE TEMPERATURE RISES ABOVE THE OCCUPIED COOLING SETPOINT THE MODE SHALL TRANSITION TO COOLING. WHEN THE SPACE TEMPERATURE FALLS BELOW THE OCCUPIED HEATING SETPOINT THE MODE SHALL TRANSITION TO HEATING. WHEN THE SPACE TEMPERATURE IS ABOVE THE OCCUPIED COOLING SETPOINT OR BELOW THE OCCUPIED HEATING SETPOINT THE MODE SHALL REMAIN IN ITS LAST STATE. IF THE SPACE TEMPERATURE SENSOR FAILS, THE MODE SHALL REMAIN IN ITS LAST STATE AND AN ALARM SHALL ANNUNCIATE AT THE BAS. IF THE LOCAL AND COMMUNICATED SETPOINTS FAIL THE CONTROLLER SHALL DISABLE THE SUPPLY FAN AND AN ALARM SHALL ANNUNCIATE AT THE BAS.

DEHUMIDIFICATION:

THE UNIT SHALL BE IN DEHUMIDIFICATION MODE IF THE SPACE HUMIDITY IS ABOVE THE DEHUMIDIFICATION SETPOINT (58 % ADJ). IN THE DEHUMIDIFICATION MODE, THE SUPPLY AIR FAN SHALL BE ENABLED, THE OUTSIDE AIR DAMPER SHALL BE COMMANDED TO MINIMUM POSITION, AND THE UNIT CONTROLLER SHALL ENERGIZE MECHANICAL COOLING AND THE REHEAT SOLENOID. WHILE IN DEHUMIDIFICATION MODE, ECONOMIZER MODE IS DISABLED.

MULTI-CIRCUIT UNITS: DURING DEHUMIDIFICATION MODE THE OUTSIDE AIR TEMPERATURE SHALL BE MONITORED. IF THIS TEMPERATURE RISES ABOVE THE REHEAT CAPACITY LIMIT SETPOINT OR FALLS BELOW THE REHEAT CAPACITY LIMIT SETPOINT – 3.0 DEG. F, THE UNIT SHALL STAGE DOWN OR STAGE UP THE COMPRESSORS RESPECTIVELY TO MEET FULL OR PART LOAD CAPACITY REQUIREMENTS BASED ON AMBIENT TEMPERATURE. FACTORY INSTALLED HOT GAS REHEAT SHALL ALLOW APPLICATION OF DEHUMIDIFICATION. DEHUMIDIFICATION SHALL BE ALLOWED ONLY WHEN THE OUTSIDE AIR TEMPERATURE IS ABOVE 40.0 DEG. F AND BELOW 100.0 DEG. F. THE ECONOMIZER OUTSIDE AIR DAMPER SHALL DRIVE TO MINIMUM POSITION DURING DEHUMIDIFICATION.

VENTILATION CONTROL:

WHEN THE SPACE CO2 LEVEL IS GREATER THAN OR EQUAL TO THE DESIGN MINIMUM CO2 SETPOINT, THE OUTDOOR AIR DAMPER SHALL OPEN TO THE DESIGN MAXIMUM OUTDOOR AIR DAMPER SETPOINT. WHEN THE SPACE CO2 LEVEL IS LESS THAN OR EQUAL TO THE DCV MINIMUM CO2 SETPOINT, THE OUTDOOR AIR DAMPER SHALL CLOSE TO THE DCV MINIMUM OUTDOOR AIR DAMPER SETPOINT. IF THERE IS A CALL FOR ECONOMIZER COOLING, THE DAMPER SHALL BE OPENED FURTHER TO SATISFY THE COOLING REQUEST.

SUPPLY FAN:

THE UNIT CONTROLLER SHALL VARY THE SUPPLY FAN SPEED TO OPTIMIZE MINIMUM FAN SPEED IN ALL COOLING AND HEATING MODES. IN DEHUMIDIFICATION MODE, THE SUPPLY FAN SHALL GO TO DEHUMIDIFICATION SETPOINT.

RELIEF AIR AND BUILDING PRESSURE CONTROL:

A DIFFERENTIAL PRESSURE TRANSDUCER SHALL ACTIVELY MONITOR THE DIFFERENCE IN PRESSURE BETWEEN THE BUILDING (INDOORS) AND OUTDOORS. IF THE BUILDING PRESSURE INCREASES ABOVE THE DESIRED SETPOINT, THE ASSOCIATED CONTROLLER SHALL MODULATE THE RELIEF AIR DAMPER TO CONTROL BUILDING PRESSURE AT SETPOINT. IF THE BUILDING PRESSURE DECREASES BELOW THE DESIRED SETPOINT, THE ASSOCIATED CONTROLLER SHALL CLOSE THE RELIEF AIR DAMPER.

FILTER STATUS:

A DIFFERENTIAL PRESSURE SWITCH SHALL MONITOR THE DIFFERENTIAL PRESSURE ACROSS THE FILTER(S) WHEN THE FAN IS RUNNING. IF THE SWITCH CLOSES DURING NORMAL OPERATION A DIRTY FILTER ALARM SHALL ANNUNCIATE AT THE BAS.

SMOKE DETECTOR SHUTDOWN:

THE UNIT SHALL SHUT DOWN IN RESPONSE TO A SIGNAL FROM THE SMOKE DETECTOR INDICATING THE PRESENCE OF SMOKE. THE SMOKE DETECTOR SHALL BE INTERLOCKED TO THE UNIT THROUGH THE DRY CONTACTS OF THE SMOKE DETECTOR. A MANUAL RESET OF THE SMOKE DETECTOR SHALL BE REQUIRED TO RESTART THE UNIT.

SPLIT SYSTEM HEAT PUMP W/ ELECTRIC HEAT:

GENERAL: SPACE TEMPERATURE SHALL BE CONTROLLED BY WALL MOUNTED THERMOSTATS. THERMOSTAT SUB-BASE SHALL INCLUDE A SYSTEM SELECTOR SWITCH (OFF-HEAT-AUTO-COOL) AND FAN SWITCH (AUTO-ON-OFF) AND BE PROVIDED BY THE AIR CONDITIONING EQUIPMENT MANUFACTURER. THERMOSTATS SHALL BE 7-DAY PROGRAMMABLE, HAVE BATTERY BACKUP WITH NIGHT LOW AND HIGH LIMIT SETTINGS, AND HAVE OCCUPIED/UNOCCUPIED SCHEDULE CAPABILITY. UNITS SHALL RUN SUBJECT TO FACTORY SAFETIES AND DUCT MOUNTED SMOKE DETECTORS AS INDICATED.

THE THERMOSTAT SHALL HAVE AN AFTER-HOURS OVERRIDE BUTTON (1-HOUR) WHICH SHALL ENERGIZE THE 100% OUTDOOR AIR UNIT.

AIR HANDLER FAN SHALL BE CONSTANT VOLUME (CAV) TYPE AND SHALL CYCLE AS REQUIRED DURING "OCCUPIED" & "UNOCCUPIED" MODES TO MAINTAIN SPACE TEMPERATURE SETPOINT.

THE SPACE THERMOSTAT SHALL HAVE A CLEAR, PLASTIC, LOCKABLE ENCLOSURE.

COOLING/HEATING MODE: THE COMPRESSOR SECTION SHALL START AND STOP ACCORDING TO THE THERMOSTAT SETPOINTS. COOLING AND HEATING SHALL CHANGE OVER AUTOMATICALLY. IN THE "COOLING" MODE, WHEN THE SPACE TEMPERATURE RISES ABOVE SETPOINT (74 °F, FIELD ADJ.), THE COMPRESSORS SHALL BE ENERGIZED AND SHALL RUN UNTIL SPACE COOLING TEMPERATURE REQUIREMENT IS SATISFIED. IN THE "HEATING" MODE, WHEN THE SPACE TEMPERATURE FALLS BELOW SETPOINT (68 °F, FIELD ADJ.), THE CYCLE SHALL REVERSE AND SHALL RUN UNTIL THE SPACE HEATING TEMPERATURE REQUIREMENT IS SATISFIED. HEAT PUMP OPERATION SHALL SERVE AS STAGE 1 HEATING. (CONTROLS SHALL BE PROVIDED THAT PREVENT SUPPLEMENTAL HEATER OPERATION WHEN THE HEATING LOAD CAN BE MET BY THE HEAT PUMP ALONE). SUPPLEMENTAL ELECTRIC HEATERS SHALL SERVE AS STAGE 2 HEATING AS WELL AS FOR DEFROST CYCLE AND EMERGENCY HEAT. DURING STAGE 2 HEATING, THE COMPRESSORS AND ELECTRIC HEATER SHALL BOTH OPERATE SIMULTANEOUSLY.

INTERLOCKS:

GENERAL:

ALL EXHAUST FANS AND AIR HANDLERS SHALL BE SHUT DOWN ON A SIGNAL FROM THE FIRE ALARM CONTROL PANEL.

OUTSIDE AIR VENTILATION RATES
IAQ PROCEDURE – 2021 IMC

ZONE TAG	FACILITY TYPE	ZONE USE	ZONE FLOOR AREA (SF) Az	ZONE MAX OCCUPANCY Rp	TABLE 6.1 OA/person (Rp)	TABLE 6.1 cfm/ft2 (Ra)	Pz*Rp	Az*Ra	TABLE 6.2 VENTILATION EFF. (Ez)	ZONE OA (CFM)
AHU#1	EDUCATIONAL	MUSIC	1705	40	10	0.06	400	102	0.8	628 (3)
ZONE HEIGHT (FT)	15			AIR CHANGES/HOUR		6.3				
DESIRED OA – IAQ	320			OA PER VRP		628 CFM	VRP OA CFM/PERSON			15.7
SUPPLY AIR (Vs)	2685			OA PER IAQ		320 CFM	IAQ OA CFM/PERSON			8.0
RETURN AIR (Vr)	2365			OA SAVINGS		308 CFM				
RECIRC. FLOW FACTOR(R)	0.88			OA DRY BULB		95 °F				
VENT. EFF. (Ez)	0.8			OA WET BULB		80 °F				
PHYSICAL ACTIVITY	STANDING (DESK WORK)			COIL LVG. DRY BULB		55 °F				
FILTER LOCATION	B			COIL LVG. WET BULB		54 °F				
HVAC FLOW TYPE	CONSTANT									
OA FLOW TYPE	CONSTANT									

CONTAMINANT OF CONCERN	CONTAMINANT SOURCE	MAXIMUM THRESHOLD VALUE (PPM)	STEADY STATE USING VRP	STEADY STATE USING IAQ	STEADY STATE LEVEL OK @ REDUCED OA?
ACETALDEHYDE	PEOPLE	20	0.01113	0.00120	YES
ACETONE	PEOPLE	19	0.00182	0.00035	YES
AMMONIA	PEOPLE	2.5	0.02006	0.00733	YES
BENZENE	PEOPLE	0.1	0.00252	0.00027	YES
2-BUTANONE (MEK)	PEOPLE	10	0.00022	0.00011	YES
CARBON DIOXIDE	PEOPLE	5000	1164	1902	YES
CHLOROFORM	PEOPLE	0.2	0.00011	0	YES
DIOXANE	PEOPLE	100	0	0	YES
HYDROGEN SULFIDE	PEOPLE	20	0	0	YES
METHANE	PEOPLE	N/A	1.68094	1.68094	YES
METHANOL	PEOPLE	200	0	0	YES
METHYLENE CHLORIDE	PEOPLE	50	0.00079	0.00010	YES
PROPANE	PEOPLE	100	0.00998	0.00998	YES
TETRACHLOROETHANE	PEOPLE	35 mg/m3	0	0	YES
TETRACHLOROETHYLENE	PEOPLE	2.5	0.00037	0.00004	YES
TOLUENE	PEOPLE	2	0.00534	0.00058	YES
TRICHLOROETHANE	PEOPLE	0.2	0.00078	0.00010	YES
XYLENE	PEOPLE	0.4	0.00230	0.00025	YES
			IS IAQ ACCEPTABLE AT REDUCED OA LEVELS?		YES

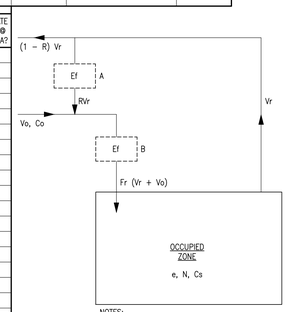

NOTES:
ASHRAE 62.1-2007 (APPENDIX D) VENTILATION SYSTEM SCHEMATIC FOR MASS BALANCE EQUATIONS FOR USE WITH THE IAQ PROCEDURE.

NOTES:
(1) IAQ PROCEDURE IN ACCORDANCE WITH THE ENGINEERED EXCEPTION FOUND IN 2021 IMC, SECTION 403.2 AND IN ACCORDANCE WITH ASHRAE 62.1-2007, SECTION 6.1.2 & 6.3 BY UTILIZING BIPOLAR IONIZATION TECHNOLOGY.
(2) ALL VALUES LISTED IN PARTS PER MILLION (PPM), UNLESS OTHERWISE NOTED.
(3) OUTSIDE AIR REQUIRED PER VENTILATION RATE PROCEDURE (VRP).
(4) CARBON DIOXIDE LEVELS MEET OSHA AND ACGIH LIMITS FOR CONTINUOUS EXPOSURE OF 5,000 PPM.
(5) BIPOLAR IONIZATION DEVICE SHALL DE-ENERGIZE WHEN RESPECTIVE AIR HANDLER FAN DE-ENERGIZES.

QUANTITIES

A, B	FILTER LOCATION
V	VOLUMETRIC FLOW
C	CONTAMINANT CONCENTRATION
e	AIR CHANGE EFFECTIVENESS
Ef	FILTER EFFICIENCY
Fr	FLOW REDUCTION FACTOR
N	CONTAMINANT GENERATION RATE
R	RECIRCULATION FLOW FACTOR

SUBSCRIPTS

o	OUTDOOR
r	RETURN
s	SPACE

OUTSIDE AIR VENTILATION RATES
IAQ PROCEDURE – 2021 IMC

ZONE TAG	FACILITY TYPE	ZONE USE	ZONE FLOOR AREA (SF) Az	ZONE MAX OCCUPANCY Rp	TABLE 6.1 OA/person (Rp)	TABLE 6.1 cfm/ft2 (Ra)	Pz*Rp	Az*Ra	TABLE 6.2 VENTILATION EFF. (Ez)	ZONE OA (CFM)
AHU#2	EDUCATIONAL	MUSIC	2500	88	10	0.06	880	150	0.8	1288 (3)
ZONE HEIGHT (FT)	15			AIR CHANGES/HOUR		5.8				
DESIRED OA – IAQ	440			OA PER VRP		1288 CFM	VRP OA CFM/PERSON			14.6
SUPPLY AIR (Vs)	3650			OA PER IAQ		440 CFM	IAQ OA CFM/PERSON			5.0
RETURN AIR (Vr)	3210			OA SAVINGS		848 CFM				
RECIRC. FLOW FACTOR(R)	0.88			OA DRY BULB		95 °F				
VENT. EFF. (Ez)	0.8			OA WET BULB		80 °F				
PHYSICAL ACTIVITY	STANDING (DESK WORK)			COIL LVG. DRY BULB		55 °F				
FILTER LOCATION	B			COIL LVG. WET BULB		54 °F				
HVAC FLOW TYPE	CONSTANT									
OA FLOW TYPE	CONSTANT									

CONTAMINANT OF CONCERN	CONTAMINANT SOURCE	MAXIMUM THRESHOLD VALUE (PPM)	STEADY STATE USING VRP	STEADY STATE USING IAQ	STEADY STATE LEVEL OK @ REDUCED OA?
ACETALDEHYDE	PEOPLE	20	0.01113	0.00122	YES
ACETONE	PEOPLE	19	0.00182	0.00049	YES
AMMONIA	PEOPLE	2.5	0.02006	0.01173	YES
BENZENE	PEOPLE	0.1	0.00252	0.00028	YES
2-BUTANONE (MEK)	PEOPLE	10	0.00022	0.00006	YES
CARBON DIOXIDE	PEOPLE	5000	1220	2802	YES
CHLOROFORM	PEOPLE	0.2	0.00011	0	YES
DIOXANE	PEOPLE	100	0	0	YES
HYDROGEN SULFIDE	PEOPLE	20	0	0	YES
METHANE	PEOPLE	N/A	1.68094	1.68094	YES
METHANOL	PEOPLE	200	0	0	YES
METHYLENE CHLORIDE	PEOPLE	50	0.00079	0.00010	YES
PROPANE	PEOPLE	100	0.00998	0.00998	YES
TETRACHLOROETHANE	PEOPLE	35 mg/m3	0	0	YES
TETRACHLOROETHYLENE	PEOPLE	2.5	0.00037	0.00003	YES
TOLUENE	PEOPLE	2	0.00534	0.00041	YES
TRICHLOROETHANE	PEOPLE	0.2	0.00078	0.00008	YES
XYLENE	PEOPLE	0.4	0.00230	0.00025	YES
			IS IAQ ACCEPTABLE AT REDUCED OA LEVELS?		YES

NOTES:
(1) IAQ PROCEDURE IN ACCORDANCE WITH THE ENGINEERED EXCEPTION FOUND IN 2021 IMC, SECTION 403.2 AND IN ACCORDANCE WITH ASHRAE 62.1-2007, SECTION 6.1.2 & 6.3 BY UTILIZING BIPOLAR IONIZATION TECHNOLOGY.
(2) ALL VALUES LISTED IN PARTS PER MILLION (PPM), UNLESS OTHERWISE NOTED.
(3) OUTSIDE AIR REQUIRED PER VENTILATION RATE PROCEDURE (VRP).
(4) CARBON DIOXIDE LEVELS MEET OSHA AND ACGIH LIMITS FOR CONTINUOUS EXPOSURE OF 5,000 PPM.
(5) BIPOLAR IONIZATION DEVICE SHALL DE-ENERGIZE WHEN RESPECTIVE AIR HANDLER FAN DE-ENERGIZES.

OUTSIDE AIR VENTILATION RATES
IAQ PROCEDURE – 2021 IMC

ZONE TAG	FACILITY TYPE	ZONE USE	ZONE FLOOR AREA (SF) Az	ZONE MAX OCCUPANCY Rp	TABLE 6.1 OA/person (Rp)	TABLE 6.1 cfm/ft2 (Ra)	Pz*Rp	Az*Ra	TABLE 6.2 VENTILATION EFF. (Ez)	ZONE OA (CFM)
AHU#3	EDUCATIONAL	MUSIC	2500	88	10	0.06	880	150	0.8	1288 (3)
ZONE HEIGHT (FT)	15			AIR CHANGES/HOUR		5.5				
DESIRED OA – IAQ	440			OA PER VRP		1288 CFM	VRP OA CFM/PERSON			14.6
SUPPLY AIR (Vs)	3455			OA PER IAQ		440 CFM	IAQ OA CFM/PERSON			5.0
RETURN AIR (Vr)	3015			OA SAVINGS		848 CFM				
RECIRC. FLOW FACTOR(R)	0.87			OA DRY BULB		95 °F				
VENT. EFF. (Ez)	0.8			OA WET BULB		80 °F				
PHYSICAL ACTIVITY	STANDING (DESK WORK)			COIL LVG. DRY BULB		55 °F				
FILTER LOCATION	B			COIL LVG. WET BULB		54 °F				
HVAC FLOW TYPE	CONSTANT									
OA FLOW TYPE	CONSTANT									

CONTAMINANT OF CONCERN	CONTAMINANT SOURCE	MAXIMUM THRESHOLD VALUE (PPM)	STEADY STATE USING VRP	STEADY STATE USING IAQ	STEADY STATE LEVEL OK @ REDUCED OA?
ACETALDEHYDE	PEOPLE	20	0.01113	0.00128	YES
ACETONE	PEOPLE	19	0.00182	0.00051	YES
AMMONIA	PEOPLE	2.5	0.02006	0.01232	YES
BENZENE	PEOPLE	0.1	0.00252	0.00030	YES
2-BUTANONE (MEK)	PEOPLE	10	0.00022	0.00009	YES
CARBON DIOXIDE	PEOPLE	5000	1220	2802	YES
CHLOROFORM	PEOPLE	0.2	0.00011	0	YES
DIOXANE	PEOPLE	100	0	0	YES
HYDROGEN SULFIDE	PEOPLE	20	0	0	YES
METHANE	PEOPLE	N/A	1.68094	1.68094	YES
METHANOL	PEOPLE	200	0	0	YES
METHYLENE CHLORIDE	PEOPLE	50	0.00079	0.00010	YES
PROPANE	PEOPLE	100	0.00998	0.00998	YES
TETRACHLOROETHANE	PEOPLE	35 mg/m3	0	0	YES
TETRACHLOROETHYLENE	PEOPLE	2.5	0.00037	0.00004	YES
TOLUENE	PEOPLE	2	0.00534	0.00062	YES
TRICHLOROETHANE	PEOPLE	0.2	0.00078	0.00012	YES
XYLENE	PEOPLE	0.4	0.00230	0.00026	YES
			IS IAQ ACCEPTABLE AT REDUCED OA LEVELS?		YES

NOTES:
(1) IAQ PROCEDURE IN ACCORDANCE WITH THE ENGINEERED EXCEPTION FOUND IN 2021 IMC, SECTION 403.2 AND IN ACCORDANCE WITH ASHRAE 62.1-2007, SECTION 6.1.2 & 6.3 BY UTILIZING BIPOLAR IONIZATION TECHNOLOGY.
(2) ALL VALUES LISTED IN PARTS PER MILLION (PPM), UNLESS OTHERWISE NOTED.
(3) OUTSIDE AIR REQUIRED PER VENTILATION RATE PROCEDURE (VRP).
(4) CARBON DIOXIDE LEVELS MEET OSHA AND ACGIH LIMITS FOR CONTINUOUS EXPOSURE OF 5,000 PPM.
(5) BIPOLAR IONIZATION DEVICE SHALL DE-ENERGIZE WHEN RESPECTIVE AIR HANDLER FAN DE-ENERGIZES.

OA VENTILATION RATES
VRP – 2021 IMC

AIR HANDLING UNIT TAG NUMBER	AHU#4 (2)
OCCUPANCY CATEGORY	OFFICE, OFFICE DRESSING STORAGE
PEOPLE OUTDOOR AIR RATE (CFM/PERSON) (Rp)	5.0 5.0 0 0
AREA OUTDOOR RATE (CFM/SQFT (Ra)	0.06 0.06 0 0.12
ZONE FLOOR AREA (SQFT) (Az)	80 80 NSA 80
NORMAL OCCUPANCY (NUMBER OF PEOPLE) (Pz)	1 1 0 0
PEAK OCCUPANCY (NUMBER OF PEOPLE)	2
CORRECTED OCCUPANCY (NUMBER OF PEOPLE)	2
CALCULATED OCCUPANCY (NUMBER OF PEOPLE) (Pz)	2
DESIGN OCCUPANCY (CALCULATED OR DEFAULT NUMBER OF PEOPLE) (Pz)	2
PEOPLE OUTDOOR AIR (CFM) (Rp x Pz)	5 5 0 0
AREA OUTDOOR AIR (CFM) (Ra x Az)	5 5 1 10
BREATHING ZONE OUTDOOR AIRFLOW (Vbz)	30
ZONE AIR DISTRIB. EFFECTIVENESS (Vbz)	0.8
ZONE OUTDOOR AIRFLOW (CFM) (Voz)	38
REQUIRED OUTDOOR AIR INTAKE FLOW SINGLE ZONE (CFM) (Vot = Voz)	38
VENTILATON PROVIDED (CFM) MIN./MAX.	150

NOTES:
(1) OUTSIDE AIR QUANTITY IS DIRECTLY SUPPLIED TO THE UNIT AND IS CALCULATED USING THE VENTILATION RATE PROCEDURE.
(2) EXCESS OUTSIDE AIR PROVIDED FOR AIR BALANCE.

OA VENTILATION RATES
VRP – 2021 IMC

AIR HANDLING UNIT TAG NUMBER	AHU#5 (2)
OCCUPANCY CATEGORY	OFFICE, OFFICE DRESSING STORAGE
PEOPLE OUTDOOR AIR RATE (CFM/PERSON) (Rp)	5.0 5.0 0 0
AREA OUTDOOR RATE (CFM/SQFT (Ra)	0.06 0.06 0 0.12
ZONE FLOOR AREA (SQFT) (Az)	80 80 NSA 80
NORMAL OCCUPANCY (NUMBER OF PEOPLE) (Pz)	1 1 0 0
PEAK OCCUPANCY (NUMBER OF PEOPLE)	2
CORRECTED OCCUPANCY (NUMBER OF PEOPLE)	2
CALCULATED OCCUPANCY (NUMBER OF PEOPLE) (Pz)	2
DESIGN OCCUPANCY (CALCULATED OR DEFAULT NUMBER OF PEOPLE) (Pz)	2
PEOPLE OUTDOOR AIR (CFM) (Rp x Pz)	5 5 0 0
AREA OUTDOOR AIR (CFM) (Ra x Az)	5 5 1 10
BREATHING ZONE OUTDOOR AIRFLOW (Vbz)	30
ZONE AIR DISTRIB. EFFECTIVENESS (Vbz)	0.8
ZONE OUTDOOR AIRFLOW (CFM) (Voz)	38
REQUIRED OUTDOOR AIR INTAKE FLOW SINGLE ZONE (CFM) (Vot = Voz)	38
VENTILATON PROVIDED (CFM) MIN./MAX.	150

NOTES:
(1) OUTSIDE AIR QUANTITY IS DIRECTLY SUPPLIED TO THE UNIT AND IS CALCULATED USING THE VENTILATION RATE PROCEDURE.
(2) EXCESS OUTSIDE AIR PROVIDED FOR AIR BALANCE.

OA VENTILATION RATES
VRP – 2021 IMC

AIR HANDLING UNIT TAG NUMBER	AHU#6 (2)
OCCUPANCY CATEGORY	LOBBY CONCESSION
PEOPLE OUTDOOR AIR RATE (CFM/PERSON) (Rp)	5.0 5.0
AREA OUTDOOR RATE (CFM/SQFT (Ra)	0.06 0.06
ZONE FLOOR AREA (SQFT) (Az)	835 125
NORMAL OCCUPANCY (NUMBER OF PEOPLE)	10 2
PEAK OCCUPANCY (NUMBER OF PEOPLE)	12
CORRECTED OCCUPANCY (NUMBER OF PEOPLE)	12
CALCULATED OCCUPANCY (NUMBER OF PEOPLE) (Pz)	12
DESIGN OCCUPANCY (CALCULATED OR DEFAULT NUMBER OF PEOPLE) (Pz)	12
PEOPLE OUTDOOR AIR (CFM) (Rp x Pz)	50 10
AREA OUTDOOR AIR (CFM) (Ra x Az)	24 9
BREATHING ZONE OUTDOOR AIRFLOW (Vbz)	93
ZONE AIR DISTRIB. EFFECTIVENESS (Vbz)	0.8
ZONE OUTDOOR AIRFLOW (CFM) (Voz)	116
REQUIRED OUTDOOR AIR INTAKE FLOW SINGLE ZONE (CFM) (Vot = Voz)	116
VENTILATON PROVIDED (CFM) MIN./MAX.	250

NOTES:
(1) OUTSIDE AIR QUANTITY IS DIRECTLY SUPPLIED TO THE UNIT AND IS CALCULATED USING THE VENTILATION RATE PROCEDURE.
(2) EXCESS OUTSIDE AIR PROVIDED FOR AIR BALANCE.

ADDITIONS
TO
ROBERTSDALE HIGH SCHOOL
ROBERTSDALE, ALABAMA
FOR THE
BALDWIN COUNTY BOARD OF EDUCATION

McKEE and ASSOCIATES
ARCHITECTS, INC.
631 SOUTH HULL STREET, MONTGOMERY, ALABAMA 36104 (334) 834-9933

SHEET TITLE : HVAC OUTSIDE AIR SCHEDULES

MCKEE JOB # : 23-195

DRAWN BY : AWB

DATE: 10.11.2023

REVISED DATE:

REVISED DATE:

REVISED DATE:

H.M. YONGE & ASSOCIATES, INC.
CONSULTING ENGINEERS // EST. 1988
51 EAST GREGORY STREET, PENSACOLA, FLORIDA 32502, PHONE: (850)434-2661
253 ST. ANTHONY STREET, MOBILE, ALABAMA 36603, PHONE: (251)690-7446

SHEET NO. : M3.2

- M:\Jobs_Active\23108 Robertsdale High School Band Room\23108M32 HVAC OA SCHEDULES.dwg
- Tuesday, October 3, 2023 3:25:54 PM

AWB> M:\Jobs_Active\23108 Robertsdale High School Band Room\23108M31 HVAC SCHEDULES.dwg 09/12/23 09:57

OUTSIDE AIR VENTILATION RATES
IAQ PROCEDURE – 2021 IMC

ZONE TAG	FACILITY TYPE	ZONE USE	ZONE FLOOR AREA (SF) Az	ZONE MAX OCCUPANCY Rp	TABLE 6.1 OA/person (Rp)	TABLE 6.1 cfm/ft2 (Ra)	Pz*Rp	Az*Ra	TABLE 6.2 VENTILATION EFF. (Ez)	ZONE OA (CFM)
PACU#1	EDUCATIONAL	GYM/STADIUM	2650	50	20.0	0.18	1000	477	0.8	1846 (3)
ZONE HEIGHT (FT)	25			AIR CHANGES/HOUR		3.2				
DESIRED OA – IAQ	440			OA PER VRP		1846 CFM	VRP OA CFM/PERSON			36.9
SUPPLY AIR (Vs)	3500			OA PER IAQ		440 CFM	IAQ OA CFM/PERSON			8.8
RETURN AIR (Vr)	3060			OA SAVINGS		1406 CFM				
RECIRC. FLOW FACTOR(R)	0.87			OA DRY BULB		95 °F				
VENT. EFF. (Ez)	0.8			OA WET BULB		80 °F				
PHYSICAL ACTIVITY	STRENUOUS EXERCISE			COIL LVG. DRY BULB		55 °F				
FILTER LOCATION	B			COIL LVG. WET BULB		54 °F				
HVAC FLOW TYPE	CONSTANT									
OA FLOW TYPE	CONSTANT									

CONTAMINANT OF CONCERN	CONTAMINANT SOURCE	MAXIMUM THRESHOLD VALUE (PPM)	STEADY STATE USING VRP	STEADY STATE USING IAQ	STEADY STATE LEVEL OK @ REDUCED OA?
ACETALDEHYDE	PEOPLE	20	0.01116	0.00130	YES
ACETONE	PEOPLE	19	0.00217	0.00099	YES
AMMONIA	PEOPLE	2.5	0.03142	0.02802	YES
BENZENE	PEOPLE	0.1	0.00253	0.00031	YES
2-BUTANONE (MEK)	PEOPLE	10	0.00029	0.00018	YES
CARBON DIOXIDE	PEOPLE	5000	832	2216	YES
CHLOROFORM	PEOPLE	0.2	0.00011	0.00002	YES
DIOXANE	PEOPLE	100	0	0	YES
HYDROGEN SULFIDE	PEOPLE	20	0	0	YES
METHANE	PEOPLE	N/A	1.68094	1.68094	YES
METHANOL	PEOPLE	200	0	0	YES
METHYLENE CHLORIDE	PEOPLE	50	0.00079	0.00010	YES
PROPANE	PEOPLE	100	0.00998	0.00998	YES
TETRACHLOROETHANE	PEOPLE	35 mg/m3	0	0	YES
TETRACHLOROETHYLENE	PEOPLE	2.5	0.00037	0.00004	YES
TOLUENE	PEOPLE	2	0.00537	0.00063	YES
TRICHLOROETHANE	PEOPLE	0.2	0.00081	0.00016	YES
XYLENE	PEOPLE	0.4	0.00230	0.00026	YES
			IS IAQ ACCEPTABLE AT REDUCED OA LEVELS?		YES

NOTES:
1. IAQ PROCEDURE IN ACCORDANCE WITH THE ENGINEERED EXCEPTION FOUND IN 2021 IMC, SECTION 403.2 AND IN ACCORDANCE WITH ASHRAE 62.1–2007, SECTION 6.1.2 & 6.3 BY UTILIZING BIPOLAR IONIZATION TECHNOLOGY.
2. ALL VALUES LISTED IN PARTS PER MILLION (PPM), UNLESS OTHERWISE NOTED.
3. OUTSIDE AIR REQUIRED PER VENTILATION RATE PROCEDURE (VRP).
4. CARBON DIOXIDE LEVELS MEET OSHA AND ACGIH LIMITS FOR CONTINUOUS EXPOSURE OF 5,000 PPM.
5. BIPOLAR IONIZATION DEVICE SHALL DE-ENERGIZE WHEN RESPECTIVE AIR HANDLER FAN DE-ENERGIZES.

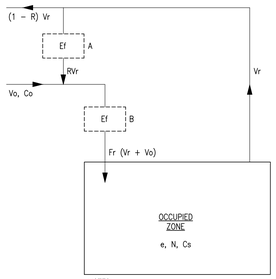

NOTES:
ASHRAE 62.1–2007 (APPENDIX D) VENTILATION SYSTEM SCHEMATIC FOR MASS BALANCE EQUATIONS FOR USE WITH THE IAQ PROCEDURE.

QUANTITIES
A, B	FILTER LOCATION
V	VOLUMETRIC FLOW
C	CONTAMINANT CONCENTRATION
e	AIR CHANGE EFFECTIVENESS
Ef	FILTER EFFICIENCY
Fr	FLOW REDUCTION FACTOR
N	CONTAMINANT GENERATION RATE
R	RECIRCULATION FLOW FACTOR

SUBSCRIPTS
o	OUTDOOR
r	RETURN
s	SPACE

OUTSIDE AIR VENTILATION RATES
IAQ PROCEDURE – 2021 IMC

ZONE TAG	FACILITY TYPE	ZONE USE	ZONE FLOOR AREA (SF) Az	ZONE MAX OCCUPANCY Rp	TABLE 6.1 OA/person (Rp)	TABLE 6.1 cfm/ft2 (Ra)	Pz*Rp	Az*Ra	TABLE 6.2 VENTILATION EFF. (Ez)	ZONE OA (CFM)
PACU#2	EDUCATIONAL	GYM/STADIUM	2650	50	20.0	0.18	1000	477	0.8	1846 (3)
ZONE HEIGHT (FT)	25			AIR CHANGES/HOUR		3.2				
DESIRED OA – IAQ	440			OA PER VRP		1846 CFM	VRP OA CFM/PERSON			36.9
SUPPLY AIR (Vs)	3500			OA PER IAQ		440 CFM	IAQ OA CFM/PERSON			8.8
RETURN AIR (Vr)	3060			OA SAVINGS		1406 CFM				
RECIRC. FLOW FACTOR(R)	0.87			OA DRY BULB		95 °F				
VENT. EFF. (Ez)	0.8			OA WET BULB		80 °F				
PHYSICAL ACTIVITY	STRENUOUS EXERCISE			COIL LVG. DRY BULB		55 °F				
FILTER LOCATION	B			COIL LVG. WET BULB		54 °F				
HVAC FLOW TYPE	CONSTANT									
OA FLOW TYPE	CONSTANT									

CONTAMINANT OF CONCERN	CONTAMINANT SOURCE	MAXIMUM THRESHOLD VALUE (PPM)	STEADY STATE USING VRP	STEADY STATE USING IAQ	STEADY STATE LEVEL OK @ REDUCED OA?
ACETALDEHYDE	PEOPLE	20	0.01116	0.00130	YES
ACETONE	PEOPLE	19	0.00217	0.00099	YES
AMMONIA	PEOPLE	2.5	0.03142	0.02802	YES
BENZENE	PEOPLE	0.1	0.00253	0.00031	YES
2-BUTANONE (MEK)	PEOPLE	10	0.00029	0.00018	YES
CARBON DIOXIDE	PEOPLE	5000	832	2216	YES
CHLOROFORM	PEOPLE	0.2	0.00011	0.00002	YES
DIOXANE	PEOPLE	100	0	0	YES
HYDROGEN SULFIDE	PEOPLE	20	0	0	YES
METHANE	PEOPLE	N/A	1.68094	1.68094	YES
METHANOL	PEOPLE	200	0	0	YES
METHYLENE CHLORIDE	PEOPLE	50	0.00079	0.00010	YES
PROPANE	PEOPLE	100	0.00998	0.00998	YES
TETRACHLOROETHANE	PEOPLE	35 mg/m3	0	0	YES
TETRACHLOROETHYLENE	PEOPLE	2.5	0.00037	0.00004	YES
TOLUENE	PEOPLE	2	0.00537	0.00063	YES
TRICHLOROETHANE	PEOPLE	0.2	0.00081	0.00016	YES
XYLENE	PEOPLE	0.4	0.00230	0.00026	YES
			IS IAQ ACCEPTABLE AT REDUCED OA LEVELS?		YES

NOTES:
1. IAQ PROCEDURE IN ACCORDANCE WITH THE ENGINEERED EXCEPTION FOUND IN 2021 IMC, SECTION 403.2 AND IN ACCORDANCE WITH ASHRAE 62.1–2007, SECTION 6.1.2 & 6.3 BY UTILIZING BIPOLAR IONIZATION TECHNOLOGY.
2. ALL VALUES LISTED IN PARTS PER MILLION (PPM), UNLESS OTHERWISE NOTED.
3. OUTSIDE AIR REQUIRED PER VENTILATION RATE PROCEDURE (VRP).
4. CARBON DIOXIDE LEVELS MEET OSHA AND ACGIH LIMITS FOR CONTINUOUS EXPOSURE OF 5,000 PPM.
5. BIPOLAR IONIZATION DEVICE SHALL DE-ENERGIZE WHEN RESPECTIVE AIR HANDLER FAN DE-ENERGIZES.

OUTSIDE AIR VENTILATION RATES
IAQ PROCEDURE – 2021 IMC

ZONE TAG	FACILITY TYPE	ZONE USE	ZONE FLOOR AREA (SF) Az	ZONE MAX OCCUPANCY Rp	TABLE 6.1 OA/person (Rp)	TABLE 6.1 cfm/ft2 (Ra)	Pz*Rp	Az*Ra	TABLE 6.2 VENTILATION EFF. (Ez)	ZONE OA (CFM)
PACU#3	EDUCATIONAL	GYMNASIUM	3750	135	7.5	0.06	1013	225	0.8	1547 (3)
ZONE HEIGHT (FT)	25			AIR CHANGES/HOUR		3.4				
DESIRED OA – IAQ	875			OA PER VRP		1547 CFM	VRP OA CFM/PERSON			11.5
SUPPLY AIR (Vs)	5250			OA PER IAQ		875 CFM	IAQ OA CFM/PERSON			6.5
RETURN AIR (Vr)	4375			OA SAVINGS		672 CFM				
RECIRC. FLOW FACTOR(R)	0.83			OA DRY BULB		95 °F				
VENT. EFF. (Ez)	0.8			OA WET BULB		80 °F				
PHYSICAL ACTIVITY	STRENUOUS EXERCISE			COIL LVG. DRY BULB		55 °F				
FILTER LOCATION	B			COIL LVG. WET BULB		54 °F				
HVAC FLOW TYPE	CONSTANT									
OA FLOW TYPE	CONSTANT									

CONTAMINANT OF CONCERN	CONTAMINANT SOURCE	MAXIMUM THRESHOLD VALUE (PPM)	STEADY STATE USING VRP	STEADY STATE USING IAQ	STEADY STATE LEVEL OK @ REDUCED OA?
ACETALDEHYDE	PEOPLE	20	0.01130	0.00169	YES
ACETONE	PEOPLE	19	0.00418	0.00165	YES
AMMONIA	PEOPLE	2.5	0.09743	0.04858	YES
BENZENE	PEOPLE	0.1	0.00253	0.00041	YES
2-BUTANONE (MEK)	PEOPLE	10	0.00029	0.00032	YES
CARBON DIOXIDE	PEOPLE	5000	1793	2865	YES
CHLOROFORM	PEOPLE	0.2	0.00011	0.00002	YES
DIOXANE	PEOPLE	100	0	0	YES
HYDROGEN SULFIDE	PEOPLE	20	0	0	YES
METHANE	PEOPLE	N/A	1.68094	1.68094	YES
METHANOL	PEOPLE	200	0	0	YES
METHYLENE CHLORIDE	PEOPLE	50	0.00079	0.00037	YES
PROPANE	PEOPLE	100	0.00998	0.00998	YES
TETRACHLOROETHANE	PEOPLE	35 mg/m3	0	0	YES
TETRACHLOROETHYLENE	PEOPLE	2.5	0.00037	0.00006	YES
TOLUENE	PEOPLE	2	0.00537	0.00083	YES
TRICHLOROETHANE	PEOPLE	0.2	0.00099	0.00024	YES
XYLENE	PEOPLE	0.4	0.00230	0.00033	YES
			IS IAQ ACCEPTABLE AT REDUCED OA LEVELS?		YES

NOTES:
1. IAQ PROCEDURE IN ACCORDANCE WITH THE ENGINEERED EXCEPTION FOUND IN 2021 IMC, SECTION 403.2 AND IN ACCORDANCE WITH ASHRAE 62.1–2007, SECTION 6.1.2 & 6.3 BY UTILIZING BIPOLAR IONIZATION TECHNOLOGY.
2. ALL VALUES LISTED IN PARTS PER MILLION (PPM), UNLESS OTHERWISE NOTED.
3. OUTSIDE AIR REQUIRED PER VENTILATION RATE PROCEDURE (VRP).
4. CARBON DIOXIDE LEVELS MEET OSHA AND ACGIH LIMITS FOR CONTINUOUS EXPOSURE OF 5,000 PPM.
5. BIPOLAR IONIZATION DEVICE SHALL DE-ENERGIZE WHEN RESPECTIVE AIR HANDLER FAN DE-ENERGIZES.

OUTSIDE AIR VENTILATION RATES
IAQ PROCEDURE – 2021 IMC

ZONE TAG	FACILITY TYPE	ZONE USE	ZONE FLOOR AREA (SF) Az	ZONE MAX OCCUPANCY Rp	TABLE 6.1 OA/person (Rp)	TABLE 6.1 cfm/ft2 (Ra)	Pz*Rp	Az*Ra	TABLE 6.2 VENTILATION EFF. (Ez)	ZONE OA (CFM)
PACU#4	EDUCATIONAL	GYMNASIUM	3750	135	7.5	0.06	1013	225	0.8	1547 (3)
ZONE HEIGHT (FT)	25			AIR CHANGES/HOUR		3.4				
DESIRED OA – IAQ	875			OA PER VRP		1547 CFM	VRP OA CFM/PERSON			11.5
SUPPLY AIR (Vs)	5250			OA PER IAQ		875 CFM	IAQ OA CFM/PERSON			6.5
RETURN AIR (Vr)	4375			OA SAVINGS		672 CFM				
RECIRC. FLOW FACTOR(R)	0.83			OA DRY BULB		95 °F				
VENT. EFF. (Ez)	0.8			OA WET BULB		80 °F				
PHYSICAL ACTIVITY	STRENUOUS EXERCISE			COIL LVG. DRY BULB		55 °F				
FILTER LOCATION	B			COIL LVG. WET BULB		54 °F				
HVAC FLOW TYPE	CONSTANT									
OA FLOW TYPE	CONSTANT									

CONTAMINANT OF CONCERN	CONTAMINANT SOURCE	MAXIMUM THRESHOLD VALUE (PPM)	STEADY STATE USING VRP	STEADY STATE USING IAQ	STEADY STATE LEVEL OK @ REDUCED OA?
ACETALDEHYDE	PEOPLE	20	0.01130	0.00169	YES
ACETONE	PEOPLE	19	0.00418	0.00165	YES
AMMONIA	PEOPLE	2.5	0.09743	0.04858	YES
BENZENE	PEOPLE	0.1	0.00253	0.00041	YES
2-BUTANONE (MEK)	PEOPLE	10	0.00029	0.00032	YES
CARBON DIOXIDE	PEOPLE	5000	1793	2865	YES
CHLOROFORM	PEOPLE	0.2	0.00011	0.00002	YES
DIOXANE	PEOPLE	100	0	0	YES
HYDROGEN SULFIDE	PEOPLE	20	0	0	YES
METHANE	PEOPLE	N/A	1.68094	1.68094	YES
METHANOL	PEOPLE	200	0	0	YES
METHYLENE CHLORIDE	PEOPLE	50	0.00079	0.00037	YES
PROPANE	PEOPLE	100	0.00998	0.00998	YES
TETRACHLOROETHANE	PEOPLE	35 mg/m3	0	0	YES
TETRACHLOROETHYLENE	PEOPLE	2.5	0.00037	0.00006	YES
TOLUENE	PEOPLE	2	0.00537	0.00083	YES
TRICHLOROETHANE	PEOPLE	0.2	0.00099	0.00024	YES
XYLENE	PEOPLE	0.4	0.00230	0.00033	YES
			IS IAQ ACCEPTABLE AT REDUCED OA LEVELS?		YES

NOTES:
1. IAQ PROCEDURE IN ACCORDANCE WITH THE ENGINEERED EXCEPTION FOUND IN 2021 IMC, SECTION 403.2 AND IN ACCORDANCE WITH ASHRAE 62.1–2007, SECTION 6.1.2 & 6.3 BY UTILIZING BIPOLAR IONIZATION TECHNOLOGY.
2. ALL VALUES LISTED IN PARTS PER MILLION (PPM), UNLESS OTHERWISE NOTED.
3. OUTSIDE AIR REQUIRED PER VENTILATION RATE PROCEDURE (VRP).
4. CARBON DIOXIDE LEVELS MEET OSHA AND ACGIH LIMITS FOR CONTINUOUS EXPOSURE OF 5,000 PPM.
5. BIPOLAR IONIZATION DEVICE SHALL DE-ENERGIZE WHEN RESPECTIVE AIR HANDLER FAN DE-ENERGIZES.

ADDITIONS
TO
ROBERTSDALE HIGH SCHOOL
ROBERTSDALE, ALABAMA
FOR THE
BALDWIN COUNTY BOARD OF EDUCATION

McKEE and ASSOCIATES, INC.
ARCHITECTS
631 SOUTH HULL STREET, MONTGOMERY, ALABAMA 36104 (334) 834-9933



SHEET TITLE : HVAC OUTSIDE AIR SCHEDULES

MCKEE JOB # : 23-195

DRAWN BY : AWB

DATE: 10.11.2023

REVISED DATE:

REVISED DATE:

REVISED DATE:

SHEET NO. : M3.3

H.M. YONGE & ASSOCIATES, INC.
CONSULTING ENGINEERS // EST. 1988
51 EAST GREGORY STREET
PENSACOLA, FLORIDA 32502
PHONE: (850)434-2661
253 ST. ANTHONY STREET
MOBILE, ALABAMA 36603
PHONE: (251)690-7446

AWB> M:\Jobs_Active\23108 Robertsdale High School Band Room\23108M33 HVAC OA SCHEDULES.dwg 10/03/23 12:52
- M:\Jobs_Active\23108 Robertsdale High School Band Room\23108M33 HVAC OA SCHEDULES.dwg
- Tuesday, October 3, 2023 3:25:55 PM

ELECTRICAL SYMBOL LEGEND

SYMBOL	DESCRIPTION
	PANELBOARD – SEE RESPECTIVE PANELBOARD SCHEDULE.
A/1	BRANCH CIRCUIT CONDUIT RUN CONCEALED IN WALL OR ABOVE CEILING. ARROWS INDICATE CIRCUIT HOMERUN, HASHMARKS INDICATE NUMBER OF CONDUCTORS, ABSENCE OF HASHMARKS INDICATES TWO CONDUCTORS PLUS GROUND. "A" DENOTES PANELBOARD SERVING CIRCUIT, "1" INDICATES CIRCUIT BREAKER SPACE IN PANELBOARD. SEE RESPECTIVE PANEL CIRCUIT SCHEDULE. MINIMUM CONDUCTOR SIZE = #12 AWG.
	INDICATES CONDUIT RUN UNDERGROUND.
	NON-FUSED DISCONNECT, HEAVY DUTY (SAFETY) SWITCH – SIZE AND TYPE AS NOTED. TOP OF SWITCH 6'-6" A.F.F. PROVIDE MECHANICALLY FASTENED PHENOLIC LABEL.
	ELECTRIC MOTOR – SEE RESPECTIVE EQUIPMENT SCHEDULE.
	20A, 125 VAC 2P., 3W., GROUNDING TYPE, DOUBLE DUPLEX RECEPTACLE. FLUSH WALL MOUNTED 18" A.F.F. WITH GROUND PIN FACING UP UNLESS NOTED OTHERWISE.
	20A, 125 VAC 2P., 3W., GROUNDING TYPE, DUPLEX RECEPTACLE. FLUSH WALL MOUNTED 18" A.F.F. WITH GROUND PIN FACING UP UNLESS NOTED OTHERWISE.
	INDICATES GROUND FAULT CIRCUIT INTERRUPTING RECEPTACLE. FLUSH WALL MOUNTED 18" A.F.F. WITH GROUND PIN FACING UP UNLESS NOTED OTHERWISE.
	20A, 125 VAC 2P., 3W., GROUNDING TYPE, DUPLEX RECEPTACLE WITH TOP OUTLET UNSWITCHED AND THE BOTTOM OUTLET SWITCHED WITH THE LIGHT FIXTURES. PROVIDE PHENOLIC LABEL INDICATING BOTTOM OUTLET IS CONTROLLED WITH THE LIGHT FIXTURES AND WILL SWITCH OFF WHEN THE ROOM IS UNOCCUPIED. RECEPTACLE SHALL BE FLUSH WALL MTD. 18" A.F.F. UNLESS NOTED OTHERWISE.
	20A, 125 VAC 2P., 3W., GROUNDING TYPE, DOUBLE DUPLEX RECEPTACLE WITH TOP OUTLET UNSWITCHED AND THE BOTTOM OUTLET SWITCHED WITH THE LIGHT FIXTURES. PROVIDE PHENOLIC LABEL INDICATING BOTTOM OUTLET IS CONTROLLED WITH THE LIGHT FIXTURES AND WILL SWITCH OFF WHEN THE ROOM IS UNOCCUPIED. RECEPTACLE SHALL BE FLUSH WALL MTD. 18" A.F.F. UNLESS NOTED OTHERWISE.
	(2) 20A, 125 VAC 2P., 3W., GROUNDING TYPE, DUPLEX RECEPTACLES FLUSH MOUNTED IN FLOOR BOX WITH FLUSH FACEPLATE AND (2) TYPE "D2" DATA OUTLETS AS INDICATED ON TELECOM LEGEND. PROVIDE DEVICE MOUNTING BRACKETS FOR EACH DEVICE. ONE OF THE TWO DUPLEX RECEPTACLES SHALL BE SWITCHED ENTIRELY. FLOOR BOX EQUAL TO WIREMOLD CAT# RFB4 SERIES WITH COVER EQUAL TO WIREMOLD CAT# FPCTC(FINISH BY ARCHITECT). PROVIDE A MINIMUM 1" CONDUIT FOR CAT-5e CABLES ROUTED UNDERGROUND OVER TO NEAREST FULL WALL AND UP TO 6" ABOVE ACCESSIBLE CEILING.
J	JUNCTION BOX LOCATION. SIZE AND TYPE AS REQUIRED.
	INSTALL OUTLET TO MATCH PLUG ON EQUIPMENT.
P	POWER RELAY TO INTERLOCK WITH 277V LIGHTS OR MECHANICAL CONTROLS EQUIPMENT. COORDINATE VOLTAGE REQUIREMENTS WITH THE MECHANICAL CONTRACTOR FOR MECHANICAL EQUIPMENT INTERLOCKS.
FAC	ADDRESSABLE INTELLIGENT FIRE ALARM SYSTEM CONTROL PANEL – WITH CELLULAR AUTO-DIAL OUT. VOICE EVACUATION CAPABLE.
ERCES	EMERGENCY RADIO RESPONDER COVERAGE HEAD END EQUIPMENT.
F	FIRE ALARM SYSTEM ADDRESSABLE PULL STATION – SEMI FLUSH MOUNTED 48" A.F.F. TO TOP UNLESS NOTED OTHERWISE.
CO	CARBON MONOXIDE SENSOR
SD	ADDRESSABLE INTELLIGENT CEILING MOUNTED FIRE ALARM SYSTEM PHOTOELECTRIC TYPE SMOKE DETECTOR WITH BASE.
HD	ADDRESSABLE INTELLIGENT FIRE ALARM SYSTEM HEAT DETECTOR RATE OF RISE TYPE.
F	FIRE ALARM SYSTEM SPEAKER / STROBE DEVICE CEILING MOUNTED, UNLESS NOTED OTHERWISE. ALL STROBES IN COMMON SPACES OR CORRIDORS SHALL BE SYNCHRONIZED. CANDELA VALUE AS INDICATED.
F	FIRE ALARM SYSTEM VISUAL DEVICE CEILING MOUNTED, UNLESS NOTED OTHERWISE. ALL STROBES IN COMMON SPACES OR CORRIDORS SHALL BE SYNCHRONIZED. CANDELA VALUE AS INDICATED.
F	FIRE ALARM SYSTEM SPEAKER / STROBE DEVICE SEMI FLUSH WALL MOUNTED AT 80" A.F.F. OR 6" BELOW THE FINISHED CEILING WHICHEVER IS LOWER, UNLESS NOTED OTHERWISE. ALL STROBES IN COMMON SPACES OR CORRIDORS SHALL BE SYNCHRONIZED. CANDELA VALUE AS INDICATED.
F	FIRE ALARM SYSTEM VISUAL DEVICE SEMI FLUSH WALL MOUNTED AT 80" A.F.F. OR 6" BELOW THE FINISHED CEILING WHICHEVER IS LOWER, UNLESS NOTED OTHERWISE. ALL STROBES IN COMMON SPACES OR CORRIDORS SHALL BE SYNCHRONIZED. CANDELA VALUE AS INDICATED.
F	EXTERIOR FIRE ALARM SYSTEM AUDIO ALARM (WEATHERPROOF DEVICE WITH WEATHERPROOF CAST BOX). FLUSH MOUNT. COORDINATE MOUNTING LOCATION WITH OBSTACLES AND MOUNT AS REQUIRED.
S R	ADDRESSABLE INTELLIGENT FIRE ALARM SYSTEM DUCT MOUNTED PHOTOELECTRIC SMOKE DETECTOR COMPLETE WITH HOUSING AND AIR SAMPLING TUBES. "S" DENOTES DETECTOR IN SUPPLY DUCT; "R" DENOTES DETECTOR IN RETURN DUCT.
R	FIRE ALARM SYSTEM INTERFACE MODULE – MOUNTED AT EQUIPMENT.
FS	SPRINKLER SYSTEM FLOW SWITCH. FURNISHED BY FIRE ALARM SYSTEM SUPPLIER, INSTALLED BY FIRE PROTECTION (SPRINKLER) SYSTEM CONTRACTOR, AND CONNECTED TO FIRE ALARM SYSTEM CONTROL PANEL BY FIRE ALARM SYSTEM CONTRACTOR.
TS	SPRINKLER SYSTEM TAMPER SWITCH. FURNISHED BY FIRE ALARM SYSTEM SUPPLIER, INSTALLED BY FIRE PROTECTION (SPRINKLER) SYSTEM CONTRACTOR, AND CONNECTED TO FIRE ALARM SYSTEM CONTROL PANEL BY FIRE ALARM SYSTEM CONTRACTOR.
VCC	ADDRESSABLE INTELLIGENT FIRE ALARM VOICE COMMAND CENTER.
MIC	ADDRESSABLE INTELLIGENT FIRE ALARM FIRE FIGHTERS MICROPHONE FLUSH MOUNTED IN WALL. COORDINATE FINAL LOCATION WITH THE AHJ PRIOR TO ROUGH-IN.
C	INDICATES DEVICE FLUSH MOUNTED HORIZONTALLY 6" ABOVE COUNTERTOP OR IN BACKSPLASH.
EWC	COORDINATE DEVICE LOCATION WITH ELECTRIC WATER COOLER. MOUNT IN AN ACCESSIBLE LOCATION.
WP	INDICATES WEATHER RESISTANT WIRING DEVICE WITH WEATHER PROOF IN-USE COVER PLATE.
GFI	INDICATES GROUND FAULT CIRCUIT INTERRUPTER TYPE DEVICE.
R	INDICATES RED DEVICE WITH RED FACE PLATE

SYMBOLS NOTES: UNLESS OTHERWISE NOTED THE FOLLOWING SHALL APPLY:

1. ALL OUTLETS SHALL BE FLUSH MOUNTED.
2. MOUNTING HEIGHTS ARE FROM THE CENTER LINE OF THE DEVICE.
3. ALL SINGLE GANG AND TWO GANG DEVICES SHALL USE A 4" SQ. BOX WITH EXTENSION RING.
4. ALL MULTI – GANG DEVICES SHALL USE A COMMON COVER PLATE
5. ALL DEVICES (i.e. SWITCHES, RECEPTACLES, TELEPHONE OUTLETS, ETC.) SHALL BE GRAY WITH STAINLESS STEEL COVER PLATES.
6. A.F.F. INDICATES MOUNTING HEIGHT ABOVE FINISHED FLOOR.
7. ALL WIRING SHALL BE COPPER.
8. DO NO INSTALL OUTLETS BACK TO BACK.
9. PROVIDE INDICATES THE ELECTRICAL CONTRACTOR SHALL PROVIDE AND INSTALL.
10. WHERE MORE THAN 3 CURRENT CARRYING CONDUCTORS MAY BE RUN IN A SINGLE CONDUIT, NEC SECTION 310.15 SHALL APPLY.

ANY PENETRATIONS THROUGH RATED WALLS SHALL BE SEALED PER THE NEC WITH UL LISTED FIRE STOPPING COMPOUND.

ALL RECEPTACLES LOCATED THROUGHOUT THE SCHOOL SHALL BE LISTED TAMPER-RESISTANT TYPE.

CONTRACTOR SHALL PROVIDE THE OWNER WITH RECORD DRAWINGS AND MANUALS THAT PROVIDE INSTRUCTION ABOUT THE OPERATION AND MAINTENANCE OF THE BUILDING'S ELECTRICAL DISTRIBUTION SYSTEM. REFER TO ASHRAE 90.1 2013 8.7.

LIGHTING FIXTURE SCHEDULE

- LIGHTING MANUFACTURERS OTHER THAN THOSE LISTED IN THIS SCHEDULE SHALL SUBMIT **PRIOR APPROVAL NO LESS THAN 10 DAYS PRIOR TO BID**. NO FIXTURES WILL BE REVIEWED AFTER THE 10 DAY DEADLINE. NO EXCEPTIONS. SUBSTITUTE PACKAGES MAY BE RESUBMITTED **ONE TIME** FOLLOWING THE INITIAL ENGINEER'S REVIEW. FAILURE TO PROVIDE AN APPROVED EQUIVALENT PACKAGE WILL RESULT IN DISAPPROVAL OF THE ENTIRE SUBSTITUTE PACKAGE. MANUFACTURERS NOT APPROVED PRIOR TO BID SHALL NOT BE SUBMITTED FOR CONSTRUCTION.
- MANUFACTURERS LISTED AS EQUALS ON THIS SCHEDULE ARE PRE-APPROVED TO BID. **PART NUMBERS LISTED ON THIS SCHEDULE ARE THE "AS SPECIFIED" FIXTURES.** ANY MANUFACTURERS LISTED ON THIS SCHEDULE WITHOUT PART NUMBERS ARE **NOT** CONSIDERED "AS SPECIFIED". THE LIGHTING PACKAGE SUBMITTED FOR CONSTRUCTION SHALL MEET OR EXCEED THE LIGHTING SPECIFICATIONS AND THE "AS SPECIFIED" FIXTURES ON THIS SCHEDULE, AND COMPLY WITH THE DESIGN AND FUNCTIONALITY REQUIREMENTS SHOWN ON THE LIGHTING PLANS, NO EXCEPTIONS. **IT IS THE RESPONSIBILITY OF THE CONTRACTOR TO ENSURE THEIR LIGHTING PACKAGE IS EQUAL TO THE SPECIFICATIONS AND PLANS PRIOR TO BIDDING.** ANY FIXTURE PACKAGE SUBMITTED FOR REVIEW DURING THE CONSTRUCTION PHASE THAT IS NOT EQUAL TO THE AS SPECIFIED FIXTURES AND PLANS WILL BE REJECTED. THE ACCEPTANCE OF AN EQUAL PACKAGE SHALL BE AT THE SOLE DISCRETION OF THE ARCHITECT AND ENGINEER. **ANY ADDITIONAL COSTS INCURRED BY BRINGING AN INFERIOR LIGHTING PACKAGE UP TO THE STANDARDS OF THE SPECIFICATIONS, AS SPECIFIED LIGHTING FIXTURES, AND PLANS DUE TO LACK OF QUALITY AND/OR FUNCTION OF DESIGN SHALL BE THE SOLE RESPONSIBILITY OF THE CONTRACTOR AND HIS/HER LIGHTING SUPPLIER, NO EXCEPTIONS.** THESE REQUIREMENTS SHALL ALSO BE INCLUSIVE OF ALL LIGHTING CONTROL SYSTEMS.

MARK	LAMPS: LUMENS	LAMPS: WATTS	LAMPS: TYPE	MOUNTING	MANUFACTURER AND CATALOG NUMBER	NOTES
D1S	1000	12.8W	LED 35K	RECESSED FLANGE	H.E. WILLIAMS 6DR-TL-L10/835-DIM1-UNV-SW-OF-CS-WET/CC-N-F1 GOTHAM EVO6SH-35/10-L06-AR-LSS-EZ1-TRW PORTFOLIO LDRC	
EX	N/A	1W	LED RED	UNIVERSAL	CHLORIDE ER55LD3R EMERGILITE BAPVN1R ASTRALITE DCA-R-BA-EM-SD	PROVIDE ARROWS AS INDICATED ON PLANS.
EXG	N/A	1W	LED RED	UNIVERSAL	CHLORIDE ER55LD3R-WG4 LITHONIA LE-S-1-R-EL N-ELA WG COOPER CX7TWG10	PROVIDE ARROWS AS INDICATED ON PLANS.
HB40 HB40E	40,000	364W	LED	SUSPENDED 23'0" A.F.F.	H.E. WILLIAMS GH-4-L480/840-FA-WG11-GC2/Y18/15-DIM-UNV LITHONIA IBC-480000LM-SEF-4FL-GND-MVOLT-GZ10-40K-80CRI-DWH-IBAC240M75-WGIBG44 METALUX CHBL-48SE-MFL-UNV-L840-GZ10-FW-CHB-WG164-T-TOGGLE-30-2PK	SO CORD IS NOT APPROVED FOR FIXTURE POWER CONNECTION. E – PROVIDE INTEGRAL 10W EMERGENCY BATTERY. PROVIDE ADDITIONAL AIRCRAFT CABLE AS REQUIRED FOR MOUNTING FIXTURE.
L130 L130E	3000	21W	LED 35K	SUSPENDED 9'0" A.F.F.	HE WILLIAMS 7SP-4-L30/835-YBY-DRV-UNV LITHONIA CLX-L48-3000LM-SFT-RDL-WD-MVOLT-GZ10-35K-80CRI-WH-HC36 M12 METALUX 4SNLED-LD5-30SL-LC-UNV-L835-CD-1-U-AYC	E – PROVIDE INTEGRAL 10W EMERGENCY BATTERY.
L140 L140E	4000	31W	LED 35K	SUSPENDED 9'0" A.F.F.	HE WILLIAMS 7SP-4-L50/835-(L40)-YBY-DRV-UNV LITHONIA CLX-L48-4000LM-SFT-RDL-WD-MVOLT-GZ10-35K-80CRI-WH-HC36 M12 METALUX 4SNLED-LD5-41SL-LC-UNV-L835-CD-1-U-AYC	E – PROVIDE INTEGRAL 10W EMERGENCY BATTERY.
L150E	5000	38W	LED 35K	SUSPENDED 9'0" A.F.F.	HE WILLIAMS 7SP-4-L50/835-YBY-DRV-UNV LITHONIA CLX-L48-5000LM-SFT-RDL-WD-MVOLT-GZ10-35K-80CRI-WH-HC36 M12 METALUX 4SNLED-LD5-49SL-LC-UNV-L835-CD-1-U-AYC	E – PROVIDE INTEGRAL 10W EMERGENCY BATTERY.
LP30 LP30E	3000	29W	LED 35K	RECESSED GRID	DAYBRITE 2FP230L835-4-DS-UNV-DIM LITHONIA EPANL-2X4-3000-80CRI-35K-MIN1-ZT-MVOLT METALUX 24FPSL2SCT3-LOW	E – PROVIDE INTEGRAL 10W EMERGENCY BATTERY. PROVIDE 1% DIMMING DRIVER.
LP38 LP38E	3800	40.2W	LED 35K	RECESSED GRID	DAYBRITE 2FP238L835-4-DS-UNV-DIM LITHONIA EPANL-2X4-4000-80CRI-35K-MIN1-ZT-MVOLT METALUX 24FPSL2SCT3-MED	E – PROVIDE INTEGRAL 10W EMERGENCY BATTERY. PROVIDE 1% DIMMING DRIVER.
LP43 LP43E	4300	45W	LED 35K	RECESSED GRID	DAYBRITE 2FP243L835-4-DS-UNV-DIM LITHONIA EPANL-2X4-4800-80CRI-35K-MIN1-ZT-MVOLT METALUX 24FPSL2SCT3-MED	E – PROVIDE INTEGRAL 10W EMERGENCY BATTERY. PROVIDE 1% DIMMING DRIVER.
LP48 LP48E	4800	45W	LED 35K	RECESSED GRID	DAYBRITE 2FP248L835-4-DS-UNV-DIM LITHONIA EPANL-2X4-4800-80CRI-35K-MIN1-ZT-MVOLT METALUX 24FPSL2SCT3-MED	E – PROVIDE INTEGRAL 10W EMERGENCY BATTERY. PROVIDE 1% DIMMING DRIVER.
LP54E	5400	56.3W	LED 35K	RECESSED GRID	DAYBRITE 2FP254L835-4-DS-UNV-DIM LITHONIA EPANL-2X4-5400-80CRI-35K-MIN1-ZT-MVOLT METALUX 24FPSL2SCT3-HIGH	E – PROVIDE INTEGRAL 10W EMERGENCY BATTERY. PROVIDE 1% DIMMING DRIVER.
LP60 LP60E	6000	56.3W	LED 35K	RECESSED GRID	DAYBRITE 2FP260L835-4-DS-UNV-DIM LITHONIA EPANL-2X4-6000-80CRI-35K-MIN1-ZT-MVOLT METALUX 24FPSL2SCT3-HIGH	E – PROVIDE INTEGRAL 10W EMERGENCY BATTERY. PROVIDE 1% DIMMING DRIVER.
LP80 LP80E	8000	80.4	LED 35K	RECESSED GRID	DAYBRITE 2FP280L835-4-DS-UNV-DIM	E – PROVIDE INTEGRAL 10W EMERGENCY BATTERY. PROVIDE 1% DIMMING DRIVER.
PL2**	24000	178	LED 40K	POLE 30'6" A.F.G.	FIXTURE: GARDCO ECF-S-64L-900-NW-G2-2-AR-277-LLC-CM30-IMR7-PCB-BZ POLE: GARDCO TRA-CA-7/4-156-30-D1-BZ OR EQUAL OR EQUAL	PROVIDE WITH INTEGRAL PHOTOCELL ON/OFF CONTROL AND 30% DIMMING AFTER 15 MINUTES NO ACTIVITY.
PL4**	24000	178	LED 40K	POLE 30'6" A.F.G.	FIXTURE: GARDCO ECF-S-64L-900-NW-G2-4-AR-277-LLC-CM30-IMR7-PCB-BZ POLE: GARDCO TRA-CA-7/4-156-30-D1-BZ OR EQUAL OR EQUAL	PROVIDE WITH INTEGRAL PHOTOCELL ON/OFF CONTROL AND 30% DIMMING AFTER 15 MINUTES NO ACTIVITY.
PL5**	24000	178	LED 40K	POLE 30'6" A.F.G.	FIXTURE: GARDCO ECF-S-64L-900-NW-G2-5-AR-277-LLC-CM30-IMR7-PCB-BZ POLE: GARDCO TRA-CA-7/4-156-30-D1-BZ OR EQUAL OR EQUAL	PROVIDE WITH INTEGRAL PHOTOCELL ON/OFF CONTROL AND 30% DIMMING AFTER 15 MINUTES NO ACTIVITY.
SF SFE	2600	32	LED 40K	SURFACE	FC LIGHTING FCW3800 UNV 4000K CRI85 26L BRE SP20 OR EQUAL OR EQUAL	E – PROVIDE REMOTE 10W EMERGENCY BATTERY EQUAL TO BBUX
WP2**	9000	70	LED 40K	WALL 17'0" A.F.G.	GARDCO 121-32L-700-NW-G4-2-277-LLC-CM30-IMR3-PCB-BZ OR EQUAL OR EQUAL	PROVIDE WITH INTEGRAL PHOTOCELL ON/OFF CONTROL AND 30% DIMMING AFTER 15 MINUTES NO ACTIVITY.
WP3**	9000	70	LED 40K	WALL 17'0" A.F.G.	GARDCO 121-32L-700-NW-G4-3-277-LLC-CM30-IMR3-PCB-BZ OR EQUAL OR EQUAL	PROVIDE WITH INTEGRAL PHOTOCELL ON/OFF CONTROL AND 30% DIMMING AFTER 15 MINUTES NO ACTIVITY.
WP4**	9000	70	LED 40K	WALL 17'0" A.F.G.	GARDCO 121-32L-700-NW-G4-4-277-LLC-CM30-IMR3-PCB-BZ OR EQUAL OR EQUAL	PROVIDE WITH INTEGRAL PHOTOCELL ON/OFF CONTROL AND 30% DIMMING AFTER 15 MINUTES NO ACTIVITY.
WS2** WS2E**	2700	22	LED 40K	WALL 7'6" A.F.G.	GARDCO 121-16L-400-NW-G4-2-277-LLC-CM30-IMR2-PCB-BZ OR EQUAL OR EQUAL	PROVIDE WITH INTEGRAL PHOTOCELL ON/OFF CONTROL AND 30% DIMMING AFTER 15 MINUTES NO ACTIVITY. E – PROVIDE INTEGRAL COLD WEATHER EMERGENCY BATTERY.
WS4** WS4E**	2700	22	LED 40K	WALL 7'6" A.F.G.	GARDCO 121-16L-400-NW-G4-4-277-LLC-CM30-IMR2-PCB-BZ OR EQUAL OR EQUAL	PROVIDE WITH INTEGRAL PHOTOCELL ON/OFF CONTROL AND 30% DIMMING AFTER 15 MINUTES NO ACTIVITY. E – PROVIDE INTEGRAL COLD WEATHER EMERGENCY BATTERY.

** FIXTURE SHALL BE PROVIDED WITH PHOTO AND MOTION CONTROL AND BE PROGRAMMED TO DIM BY 30% DURING ANY PERIOD WHERE NO ACTIVITY HAS BEEN DETECTED FOR LONGER THAN 15 MINUTES. THE CONTRACTOR SHALL COORDINATE SPECIFIC REQUIREMENTS WITH THE FIXTURE MANUFACTURER. IT IS THE RESPONSIBILITY OF THE CONTRACTOR TO ENSURE THAT ALL CONTROLS AND ACCESSORIES HAVE BEEN PROVIDED WITH THE FIXTURE FOR A COMPLETE AND FUNCTIONAL ASSEMBLY REGARDLESS OF THE SPECIFIED MODEL NUMBER. SEE KEYNOTES ON LIGHTING PLANS FOR ADDITIONAL INFORMATION.

GENERAL NOTES:

1. THE MOUNTING HEIGHTS/PENDANT LENGTHS OF ALL FIXTURES SHALL BE COORDINATED WITH THE ARCHITECT PRIOR TO INSTALLATION.
2. ANY EXPOSED RACEWAY SHALL BE PAINTED TO MATCH THE BACKGROUND COLOR.
3. PROVIDE FLANGE KITS FOR ALL FIXTURES INSTALLED IN A SHEET ROCK CEILING.
4. CONTRACTOR SHALL ORDER FIXTURES WITH PROTECTIVE COVER OPTION TO PROTECT FIXTURES DURING CONSTRUCTION.
5. FIXTURE TAGS THAT INCLUDE "E" SHALL BE PROVIDED WITH EMERGENCY BATTERY BACK UP.

OVERALL ELECTRICAL GENERAL NOTES:

a. THE CONTRACTOR SHALL VISIT THE JOB SITE AND BECOME FAMILIAR WITH THE EXTENT OF WORK REQUIRED TO COMPLETE THE JOB PRIOR TO BIDDING.

b. THE CONTRACTOR SHALL COORDINATE THE LOCATION OF ALL MECHANICAL EQUIPMENT WITH THE MECHANICAL CONTRACTOR PRIOR TO ROUGH IN AND INSTALLATION.

c. ALL PRIMARY CONDUIT SHALL BE RUN AT 48" BELOW FINISHED GRADE. ALL SECONDARY AND EXTERIOR UNDERGROUND BRANCH CIRCUIT CONDUIT(S) SHALL BE RUN 36" BELOW FINISHED GRADE.

d. IN ALL MECHANICAL ROOMS, ALL CONDUIT AND BOXES ARE TO BE SURFACE MOUNTED.

e. THE CONTRACTOR SHALL PROVIDE WEATHER PROOF / FIRE SEAL AS REQUIRED ON ALL EXTERIOR WALL PENETRATIONS.

f. IT IS THE RESPONSIBILITY OF THE FIRE ALARM CONTRACTOR TO PROVIDE ANY NECESSARY COMPONENTS (i.e. BOOSTER PANELS) AND MAKE ALL THE NECESSARY CONNECTIONS FROM THE NEW FIRE ALARM DEVICES AND JUNCTION BOX TO THE EXISTING FIRE ALARM CONTROL PANEL IN THE EXISTING ELECTRICAL ROOM AND THE TO ENSURE A FULLY FUNCTIONAL CAMPUS WIDE SYSTEM.

g. ALL PHASING OF WORK SHALL BE SCHEDULED WITH THE OWNER AND ARCHITECT PRIOR TO COMMENCEMENT OF WORK. THE CONTRACTOR SHALL SCHEDULE ALL OUTAGES WITH THE OWNER AT LEAST (14) DAYS IN ADVANCE AND ANY GIVEN OUTAGE SHALL NOT BE A DURATION IN EXCESS OF (8) HOURS.

h. CONTRACTOR SHALL COORDINATE ALL UNDERGROUND WORK WITH OTHER EXISTING/NEW UTILITIES TO AVOID CONFLICT.

LIGHTING SYMBOL LEGEND

SYMBOL	DESCRIPTION
	"LED" LIGHTING FIXTURE. LETTER(S) DENOTE TYPE – SEE LIGHTING FIXTURE SCHEDULE.
	"LED" LIGHTING FIXTURE WITH INTEGRAL BATTERY BACKUP.
	LED LIGHTING FIXTURE. LETTER(S) DENOTE TYPE – SEE LIGHTING FIXTURE SCHEDULE.
	"LED" EXIT LIGHT. DARKENED QUADRANTS INDICATE ILLUMINATED FACES, ARROWS AS INDICATED. LETTER(S) DENOTE TYPE – SEE LIGHTING FIXTURE SCHEDULE.
$	20 AMP, 120/277 VAC SINGLE POLE TOGGLE SWITCH – FLUSH WALL MOUNTED 48" A.F.F. UNLESS NOTED OTHERWISE. SUBSCRIPT INDICATES AS FOLLOWS: 3 – 20 AMP, 120/277 VAC THREE WAY TOGGLE SWITCH 4 – 20 AMP, 120/277 VAC FOUR WAY TOGGLE SWITCH DT – DUAL TECHNOLOGY MOTION SENSOR WALL SWITCH. WATTSTOPPER DW-100. TIME DELAY DURATION SHALL BE 20 MINUTES MAXIMUM. PROGRAM FOR "MANUAL ON". DTA – DUAL TECHNOLOGY MOTION SENSOR WALL SWITCH. WATTSTOPPER DW-100. TIME DELAY DURATION SHALL BE 20 MINUTES MAXIMUM. PROGRAM FOR "AUTOMATIC ON". DT3 – MULTI-WAY DUAL TECHNOLOGY MOTION SENSOR WALL SWITCH. WATTSTOPPER DW-103. TIME DELAY DURATION SHALL BE 20 MINUTES MAXIMUM. PROGRAM FOR "MANUAL ON". M – 30 AMP SWITCH EQUAL TO HUBBELL HBL7832D OR HBL7810D, AS REQUIRED. PROVIDE PHENOLIC LABEL. MO – LOW VOLTAGE MOMENTARY TOGGLE SWITCH EQUAL TO WATTSTOPPER LVS-1 FOR "MANUAL ON" CONTROL OF CEILING MOUNTED OCCUPANCY SENSOR. MOD – LOW VOLTAGE MANUAL ON AND DIMMING WALL SWITCH EQUAL TO WATTSTOPPER DCLV2. SEE LIGHTING PLANS AND DETAILS FOR ADDITIONAL REQUIREMENTS. PROGRAM FOR "MANUAL ON". PROVIDE ALL 0-10V WIRING AS REQUIRED. D – 0-10V ON/OFF/DIMMING WALL SWITCH. SEE LIGHTING PLANS AND DETAILS FOR ADDITIONAL REQUIREMENTS. LVX – LOW VOLTAGE MOMENTARY WALL SWITCH COMPATIBLE WITH RELAY PANEL. SEE LIGHTING PLANS AND DETAILS FOR ADDITIONAL REQUIREMENTS. PROGRAM FOR "MANUAL ON" AND "AUTOMATIC OFF". DTD – DUAL TECHNOLOGY MOTION SENSOR WALL SWITCH. WATTSTOPPER DW-311. TIME DELAY DURATION SHALL BE 20 MINUTES MAXIMUM. PROGRAM FOR "MANUAL ON". PROVIDE ALL 0-10V WIRING AS REQUIRED.
	DUAL TECHNOLOGY CEILING-MOUNTED 360° OCCUPANCY SENSOR, WATTSTOPPER DT-300. SEE LIGHTING CONTROL WIRING DIAGRAM FOR ADDITIONAL INFORMATION. MOUNT AT LOCATION AS INDICATED ON PLANS. DEVICE SHALL BE PROGRAMMED FOR "AUTOMATIC ON" (UNLESS INDICATED OTHERWISE ON PLANS). PROGRAM SUCH THAT BOTH TECHNOLOGIES ARE REQUIRED TO TRIGGER LIGHTS "ON" AND EITHER TECHNOLOGY SHALL "HOLD" LIGHTS "ON". SEE PLANS FOR SENSOR LOCATIONS THAT ARE "MANUAL ON" ONLY. TIME DELAY DURATION SHALL BE 20 MINUTES MAXIMUM. SEE MANUFACTURERS INSTRUCTIONS FOR APPROPRIATE DIP SWITCH SETTINGS.
HB	PASSIVE INFRARED, LOW VOLTAGE, HIGH BAY, CEILING-MOUNTED 360° OCCUPANCY SENSOR, WATTSTOPPER HB300B-L3. SEE LIGHTING CONTROL WIRING DIAGRAM FOR ADDITIONAL INFORMATION. MOUNT AT LOCATION AS INDICATED ON PLANS. DEVICE SHALL BE PROGRAMMED FOR "AUTOMATIC ON" (UNLESS INDICATED OTHERWISE ON PLANS). SEE PLANS FOR SENSOR LOCATIONS THAT ARE "MANUAL ON" ONLY. TIME DELAY DURATION SHALL BE 20 MINUTES MAXIMUM. SEE MANUFACTURERS INSTRUCTIONS FOR APPROPRIATE DIP SWITCH SETTINGS.
PP	POWER PACK RELAY FOR CONTROL OF LIGHTING CONTROLS, EQUAL TO WATTSTOPPER CAT# BZ-150. MOUNT DEVICE IN AN ACCESSIBLE LOCATION.
ODP	OUTDOOR PIR MOTION SENSOR WITH DAYLIGHT PHOTO CONTROL AND DIMMING EQUAL TO WATTSTOPPER FSP-211. SEE LIGHTING PLANS FOR ADDITIONAL INFORMATION. PROVIDE ALL 0-10V WIRING AS REQUIRED.

SYMBOLS LEGEND GENERAL NOTES:

1. ALL DEVICES ARE TO BE FLUSH MOUNTED.
2. MOUNTING HEIGHTS ARE FROM THE CENTER LINE OF THE DEVICE.
3. ALL SINGLE GANG AND TWO GANG DEVICES SHALL USE A 4" SQ. BOX WITH EXTENSION RING.
4. ALL MULTI – GANG DEVICES SHALL USE A COMMON COVER PLATE COLORS FOR ALL DEVICES (i.e. SWITCHES, RECEPTACLES, TELEPHONE OUTLETS, ETC.) SHALL BE GRAY WITH STAINLESS STEEL COVER PLATES.
5. LIGHTING CONTROL SYSTEM SHALL BE PROGRAMMED BY A CERTIFIED LIGHTING CONTROLS COMMISSIONING INSTALLER.
6. CONTRACTOR SHALL REFERENCE DETAIL SHEET FOR LOW VOLTAGE LIGHTING SWITCH WIRING REQUIREMENTS.
7. CONTRACTOR SHALL REFERENCE DETAIL SHEET FOR LIGHTING CONTROL WIRING REQUIREMENTS.

CONTRACTOR SHALL PROVIDE A MINIMUM OF 4 HOURS OWNER TRAINING ON THE LIGHTING CONTROL SYSTEM BY A FACTORY CERTIFIED REPRESENTATIVE.

CONTRACTOR SHALL SUBMIT AN OCCUPANCY SENSOR LAYOUT ON A FLOOR PLAN AS PART OF THE SHOP DRAWINGS.

SYSTEMS SYMBOL LEGEND

SYMBOL	DESCRIPTION
	WIRELESS SMART TV POWER AND DATA. COORDINATE ELEVATION WITH ARCHITECT PRIOR TO ANY ROUGH-IN. LOCATIONS SHOWN ON PLAN ARE APPROXIMATIONS ONLY AND SHALL NOT BE USED FOR SPECIFIC ROUGH-IN LOCATIONS. ALL ROUGH-IN LOCATIONS SHALL BE COORDINATED WITH THE ARCHITECT PRIOR TO BEGINNING ANY WORK. SMART TV IS PROVIDED BY OTHERS, 120V POWER AND DATA IS TO BE CONNECTED BY THE ELECTRICAL CONTRACTOR. PROVIDE AND INSTALL 120V 20A RECEPTACLE AS RECOMMENDED BY THE TV MANUFACTURER. PROVIDE POWER CONNECTION TO LOCAL RECEPTACLE CIRCUIT. FIELD COORDINATE RECEPTACLE MOUNTING HEIGHT WITH ARCHITECT PRIOR TO ROUGH-IN, RECEPTACLE SHALL BE CONCEALED BEHIND TV. CONTRACTOR SHALL INSTALL D2 DATA OUTLET CONCEALED BEHIND SMART TV. FIELD COORDINATE DATA OUTLET MOUNTING HEIGHT WITH ARCHITECT PRIOR TO ROUGH-IN.
C	INTERCOM SYSTEM WALL MOUNTED CALL STATION. MOUNT 48" AFF.
	WEATHER-PROOF, WALL MOUNTED, INTERCOM SYSTEM SPEAKER. MOUNT 9'-0" AFF.
S	INTERCOM SYSTEM CEILING MOUNTED SPEAKER.
C	WIRELESS WALL ANALOG 120V POWERED CLOCK, MOUNTED 1' ABOVE MARKER BOARD. COORDINATE EXACT LOCATION WITH ARCHITECT. PROVIDE ALL POWER CONNECTIONS AS REQUIRED TO POWER CIRCUIT IN SERVING SPACE. COORDINATE WITH CLOCK MANUFACTURER FOR RECEPTACLE REQUIREMENTS PRIOR TO ANY ROUGH-IN. PROVIDE GFCI TYPE RECEPTACLE WHERE REQUIRED BY CODE.
D1	DATA OUTLET IN A 4" SQUARE BOX WITH 1 GANG EXTENSION RING. DEVICE MOUNTED 18" AFF UNLESS NOTED OTHERWISE. STUB 3/4"C FROM BACKBOX TO 6" ABOVE ACCESSIBLE CEILING, PROVIDE CONDUIT BUSHINGS. PROVI

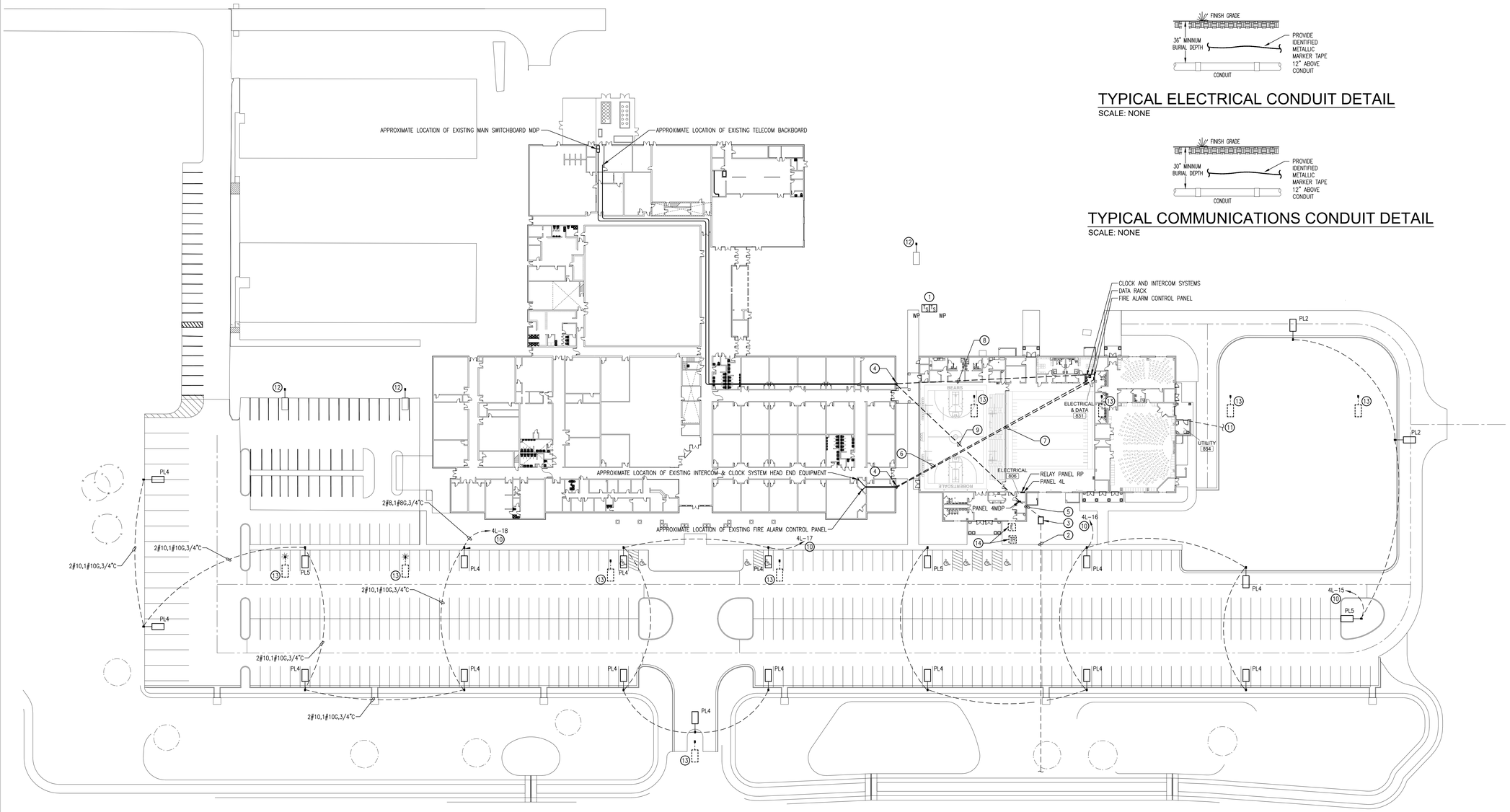

TYPICAL ELECTRICAL CONDUIT DETAIL
SCALE: NONE

TYPICAL COMMUNICATIONS CONDUIT DETAIL
SCALE: NONE

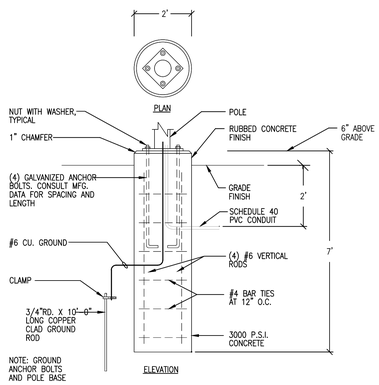

EXACT POLE BASE REQUIREMENTS SHALL BE CERTIFIED BY A STRUCTURAL ENGINEER PRIOR TO POLE BASE INSTALLATION.

LIGHTING POLE BASE DETAIL
SCALE: NONE

ELECTRICAL SITE PLAN
SCALE: 1" = 40'-0"

FIELD VERIFY EXISTING SYSTEMS HEAD END EQUIPMENT AND SWITCHBOARD LOCATIONS PRIOR TO BID

ELECTRICAL SITE PLAN KEY NOTES

1. COORDINATE LOCATION OF TAMPER SWITCHES WITH CIVIL ENGINEER AND BACKFLOW PREVENTER.
2. NEW UNDERGROUND PRIMARY ELECTRICAL SERVICE TO POWER COMPANY SWITCH/POLE. PROVIDE CONDUITS AS REQUIRED BY POWER COMPANY WITH PULL WIRE AT A MINIMUM OF 48" BELOW GRADE. CAP CONDUIT AT BOTH ENDS. COORDINATE CONDUIT STUB LOCATION AT RIGHT OF WAY WITH POWER COMPANY PRIOR TO ANY ROUGH-IN. ALL UTILITY RELATED FEES SHALL BE INCLUDED IN THE BID PRICE.
3. NEW PAD MOUNT UTILITY TRANSFORMER. SEE SINGLE LINE. COORDINATE REQUIREMENTS, LOCATION, AND CLEARANCES WITH POWER COMPANY PRIOR TO ANY ROUGH-IN.
4. CONDUITS SHALL TURN UP AT EXTERIOR WALL AND BE ROUTED OVER TO EXISTING SYSTEMS HEAD END EQUIPMENT/MAIN PANEL. FIELD VERIFY EXACT LOCATION AND REQUIREMENTS PRIOR TO BID. COORDINATE ENTRY LOCATION AT EXISTING BUILDING WITH ARCHITECT AND OWNER. CONDUITS SHALL BE CONCEALED FROM VIEW.
5. NEW UNDERGROUND ELECTRICAL SERVICE. COORDINATE ALL REQUIREMENTS WITH LOCAL UTILITY PRIOR TO ANY ROUGH-IN. SEE SINGLE LINE DIAGRAM FOR MORE INFORMATION.
6. PROVIDE ONE 2.5" CONDUIT WITH PULL STRING FOR NEW INTERCOM SYSTEM CIRCUITS. ROUTE CONDUIT BELOW GRADE FROM NEW INTERCOM SYSTEM TO EXISTING INTERCOM SYSTEM MASTER CONSOLE. SEE INTERCOM SYSTEM RISER DIAGRAM FOR ADDITIONAL REQUIREMENTS. PROVIDE ALL PULL BOXES AS REQUIRED. PENETRATIONS THROUGH FIRE WALLS SHALL BE PROVIDED WITH UL LISTED FIRE STOPPING COMPOUND. EXISTING CONCRETE/ASPHALT SHALL BE SAW CUT AS REQUIRED TO ACCOMMODATE NEW CONDUIT. ALL AREAS WHERE UNDERGROUND CONDUIT IS ROUTED SHALL BE RETURNED TO ORIGINAL CONDITION. COORDINATE FINAL TERMINATION LOCATION WITH THE OWNER.
7. PROVIDE ONE 1.5" CONDUIT WITH PULL STRING FOR NEW FIRE ALARM SYSTEM NETWORK CONNECTION. ROUTE CONDUIT BELOW GRADE FROM NEW FIRE ALARM CONTROL PANEL TO EXISTING FIRE ALARM CONTROL PANEL. SEE FIRE ALARM SYSTEM RISER DIAGRAM FOR ADDITIONAL REQUIREMENTS. PROVIDE ALL PULL BOXES AS REQUIRED. PENETRATIONS THROUGH FIRE WALLS SHALL BE PROVIDED WITH UL LISTED FIRE STOPPING COMPOUND. EXISTING CONCRETE/ASPHALT SHALL BE SAW CUT AS REQUIRED TO ACCOMMODATE NEW CONDUIT. ALL AREAS WHERE UNDERGROUND CONDUIT IS ROUTED SHALL BE RETURNED TO ORIGINAL CONDITION. COORDINATE FINAL TERMINATION LOCATION WITH THE OWNER.
8. PROVIDE TWO 3" CONDUITS WITH PULL STRING FOR NEW COMMUNICATIONS/DATA CONNECTION. ROUTE CONDUIT BELOW GRADE FROM NEW COMM EQUIPMENT, TO EXISTING MAIN COMMUNICATIONS ROOM. PROVIDE ALL PULL BOXES AS REQUIRED. PENETRATIONS THROUGH FIRE WALLS SHALL BE PROVIDED WITH UL LISTED FIRE STOPPING COMPOUND. STUB CONDUIT DOWN 6" BELOW CEILING AT EXISTING COMMUNICATIONS/DATA EQUIPMENT. PROVIDE FIBER OPTIC CABLE, INDOOR/OUTDOOR, 6 STRAND COUNT, MULTIMODE, PLENUM RATED, (OPTICAL CABLE CORPORATION DX06-050D-WLX/900-6FNP) OR APPROVED EQUAL), (3.0dB/km AND 2000 MHz-km @ 850nm, 1.0 dB/km AND 1500 MHz-km @ 1310 nm). TERMINATE ALL FIBERS WITH "ST" CONNECTORS. LEAVE A MINIMUM OF 10FT SLACK BUFFERED FIBER AT EACH TERMINATION POINT. RUN CONTINUOUS FROM SOURCE TO DESTINATION WITH NO SPLICES OR TERMINATIONS. TERMINATE CABLE AT BOTH ENDS. PROVIDE NEW HARDWARE AS REQUIRED TO INTERFACE WITH EXISTING SYSTEM. INSTALLER SHALL HAVE RCDD ON STAFF. EXISTING CONCRETE/ASPHALT SHALL BE SAW CUT AS REQUIRED TO ACCOMMODATE NEW CONDUIT. ALL AREAS WHERE UNDERGROUND CONDUIT IS ROUTED SHALL BE RETURNED TO ORIGINAL CONDITION. COORDINATE FINAL TERMINATION LOCATION WITH THE OWNER.
9. PROVIDE ONE 1"C WITH 1#2/0 GROUND CONDUCTOR ROUTED ABOVE CEILING FROM NEW ELECTRICAL SERVICE GROUNDING ELECTRODE SYSTEM TO EXISTING SERVICE GROUNDING ELECTRODE SYSTEM, BOND AT BOTH ENDS. PENETRATIONS THROUGH FIRE WALLS SHALL BE PROVIDED WITH UL LISTED FIRE STOPPING COMPOUND. EXISTING CONCRETE/ASPHALT SHALL BE SAW CUT AS REQUIRED TO ACCOMMODATE NEW CONDUIT. ALL AREAS WHERE UNDERGROUND CONDUIT IS ROUTED SHALL BE RETURNED TO ORIGINAL CONDITION. COORDINATE FINAL TERMINATION LOCATION WITH THE OWNER.
10. THROUGH RELAY PANEL RP.
11. PROVIDE THREE 1" CONDUITS WITH PULLSTRING TO LOCATION DESIGNATED BY IRRIGATION SYSTEM INSTALLER FOR VALVE WIRING. CAP CONDUIT AT BOTH ENDS.
12. EXISTING FIXTURE TO REMAIN. ENSURE CIRCUIT REMAINS ENERGIZED WITH THE REMOVAL OF THE INDICATED SITE LIGHTING FIXTURES. PROVIDE MATCHING CONDUIT AND CONDUCTORS AND HANDHOLES AS REQUIRED. REFERENCE CIVIL PLANS FOR ADDITIONAL INFORMATION.
13. EXISTING FIXTURE TO REMOVED COMPLETE WITH CONDUIT AND WIRING BACK TO SOURCE. ENSURE DOWNSTREAM FIXTURES REMAIN ENERGIZED. PROVIDE MATCHING CONDUIT AND CONDUCTORS AND HANDHOLES AS REQUIRED. REFERENCE CIVIL PLANS FOR ADDITIONAL INFORMATION.
14. COORDINATE REMOVAL OR RELOCATION OF EQUIPMENT WITH THE POWER COMPANY. PROVIDE ADDITIONAL CONDUIT AND CONDUCTORS, TO MATCH EXISTING, AS REQUIRED TO FEED EXISTING SITE LIGHTING TO REMAIN. REFERENCE CIVIL PLANS FOR ADDITIONAL INFORMATION.

H.M. YONGE & ASSOCIATES, INC.
CONSULTING ENGINEERS // EST. 1988
51 EAST GREGORY STREET
PENSACOLA, FLORIDA 32502
PHONE: (850)434-2661
253 ST. ANTHONY STREET
MOBILE, ALABAMA 36603
PHONE: (251)690-7446

RDH> J:\Jobs_Active\23108 Robertsdale High School Band Room\23108E10 SITE PLAN.dwg 09/14/23 15:53

ADDITIONS
TO
ROBERTSDALE HIGH SCHOOL
ROBERTSDALE, ALABAMA
FOR THE
BALDWIN COUNTY BOARD OF EDUCATION

McKEE and ASSOCIATES
ARCHITECTS, INC.
631 SOUTH HULL STREET, MONTGOMERY, ALABAMA 36104 (334) 834-9933

SHEET TITLE : ELECTRICAL SITE PLAN

MCKEE JOB # : 23-195

DRAWN BY : RDH

DATE: 10.11.2023

REVISED DATE:

REVISED DATE:

REVISED DATE:

SHEET NO. : E1.0

- J:\Jobs_Active\23108 Robertsdale High School Band Room\23108E10 SITE PLAN.dwg
- Thursday, October 5, 2023 10:24:22 AM

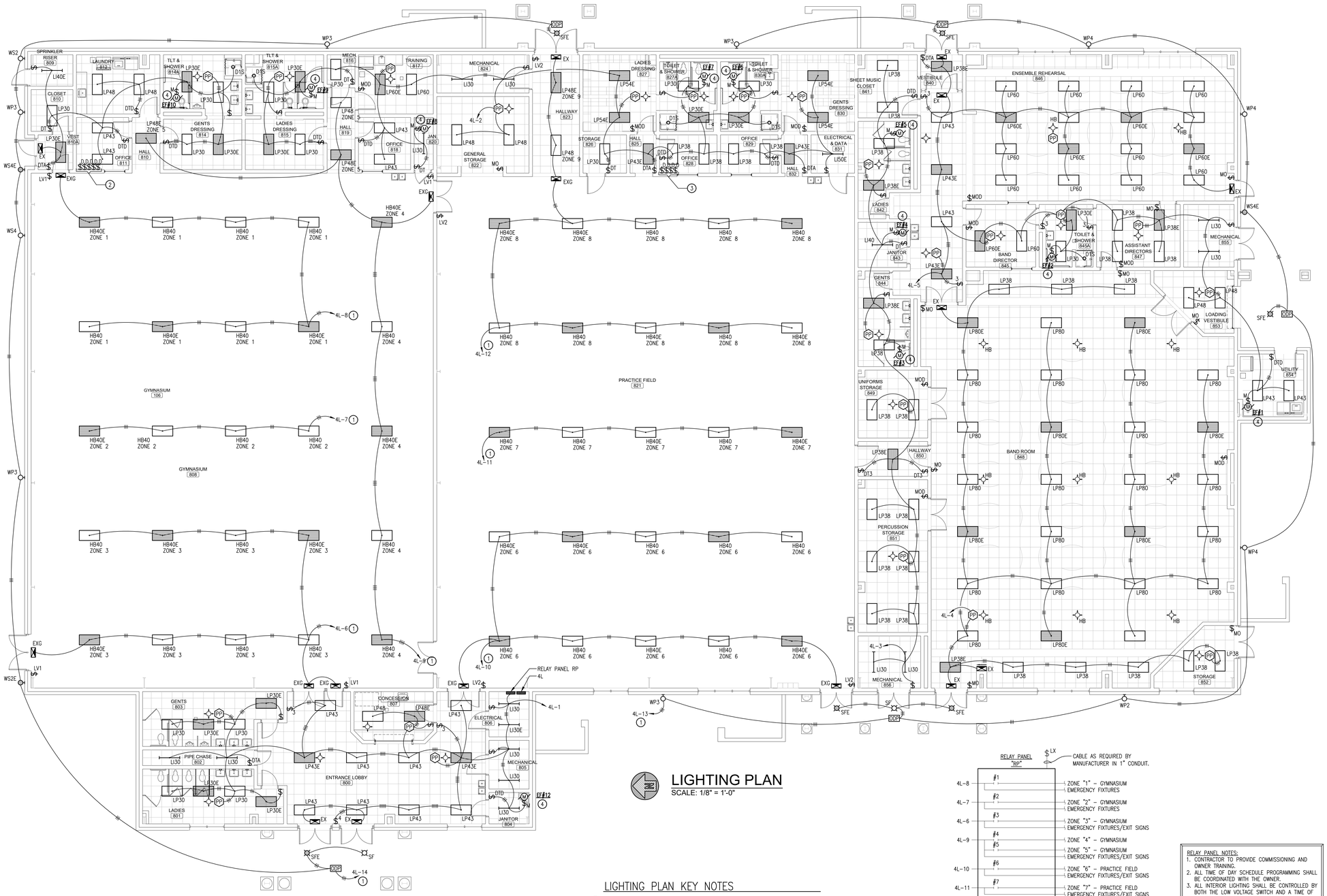

LIGHTING PLAN
SCALE: 1/8" = 1'-0"

LIGHTING PLAN KEY NOTES

1. THROUGH RELAY PANEL RP.
2. DIMMER SWITCHES FOR CONTROL OF EACH ZONE IN THE GYM. PROVIDE LOW VOLTAGE WIRING IN 1/2" CONDUIT TO EACH FIXTURE IN THE CORRESPONDING ZONE. COORDINATE FINAL LOCATION WITH OWNER PRIOR TO ROUGH-IN.
3. DIMMER SWITCHES FOR CONTROL OF EACH ZONE IN THE PRACTICE FIELD. PROVIDE LOW VOLTAGE WIRING IN 1/2" CONDUIT TO EACH FIXTURE IN THE CORRESPONDING ZONE. COORDINATE FINAL LOCATION WITH OWNER PRIOR TO ROUGH-IN.
4. PROVIDE CONNECTION TO 277V LIGHTING CIRCUIT. PROVIDE POWER RELAY FOR CONTROL OF 120V FAN.

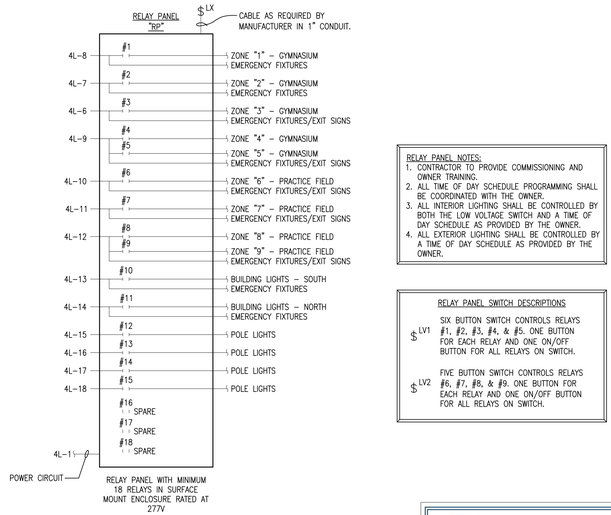

RELAY PANEL CONNECTION DIAGRAM
SCALE: NONE

RELAY PANEL NOTES:
1. CONTRACTOR TO PROVIDE COMMISSIONING AND OWNER TRAINING.
2. ALL TIME OF DAY SCHEDULE PROGRAMMING SHALL BE COORDINATED WITH THE OWNER.
3. ALL INTERIOR LIGHTING SHALL BE CONTROLLED BY BOTH THE LOW VOLTAGE SWITCH AND A TIME OF DAY SCHEDULE AS PROVIDED BY THE OWNER.
4. ALL EXTERIOR LIGHTING SHALL BE CONTROLLED BY A TIME OF DAY SCHEDULE AS PROVIDED BY THE OWNER.

RELAY PANEL SWITCH DESCRIPTIONS

LV1 SIX BUTTON SWITCH CONTROLS RELAYS #1, #2, #3, #4, & #5. ONE BUTTON FOR EACH RELAY AND ONE ON/OFF BUTTON FOR ALL RELAYS ON SWITCH.

LV2 FIVE BUTTON SWITCH CONTROLS RELAYS #6, #7, #8, & #9. ONE BUTTON FOR EACH RELAY AND ONE ON/OFF BUTTON FOR ALL RELAYS ON SWITCH.

H.M. YONGE & ASSOCIATES, INC.
CONSULTING ENGINEERS // EST. 1988
51 EAST GREGORY STREET
PENSACOLA, FLORIDA 32502
PHONE: (850)434-2661
253 ST. ANTHONY STREET
MOBILE, ALABAMA 36603
PHONE: (251)690-7446

ADDITIONS TO ROBERTSDALE HIGH SCHOOL
ROBERTSDALE, ALABAMA
FOR THE
BALDWIN COUNTY BOARD OF EDUCATION

McKEE and ASSOCIATES
ARCHITECTS, INC.
631 SOUTH HULL STREET, MONTGOMERY, ALABAMA 36104 (334) 834-9933

SHEET TITLE : LIGHTING PLAN

MCKEE JOB # : 23-195

DRAWN BY : RDH

DATE: 10.11.2023

REVISED DATE:

REVISED DATE:

REVISED DATE:

SHEET NO. : E1.1

RDH> J:\Jobs_Active\23108 Robertsdale High School Band Room\23108E11 LIGHTING PLAN.dwg 09/05/23 10:12

- J:\Jobs_Active\23108 Robertsdale High School Band Room\23108E11 LIGHTING PLAN.dwg
- Thursday, October 5, 2023 10:24:25 AM

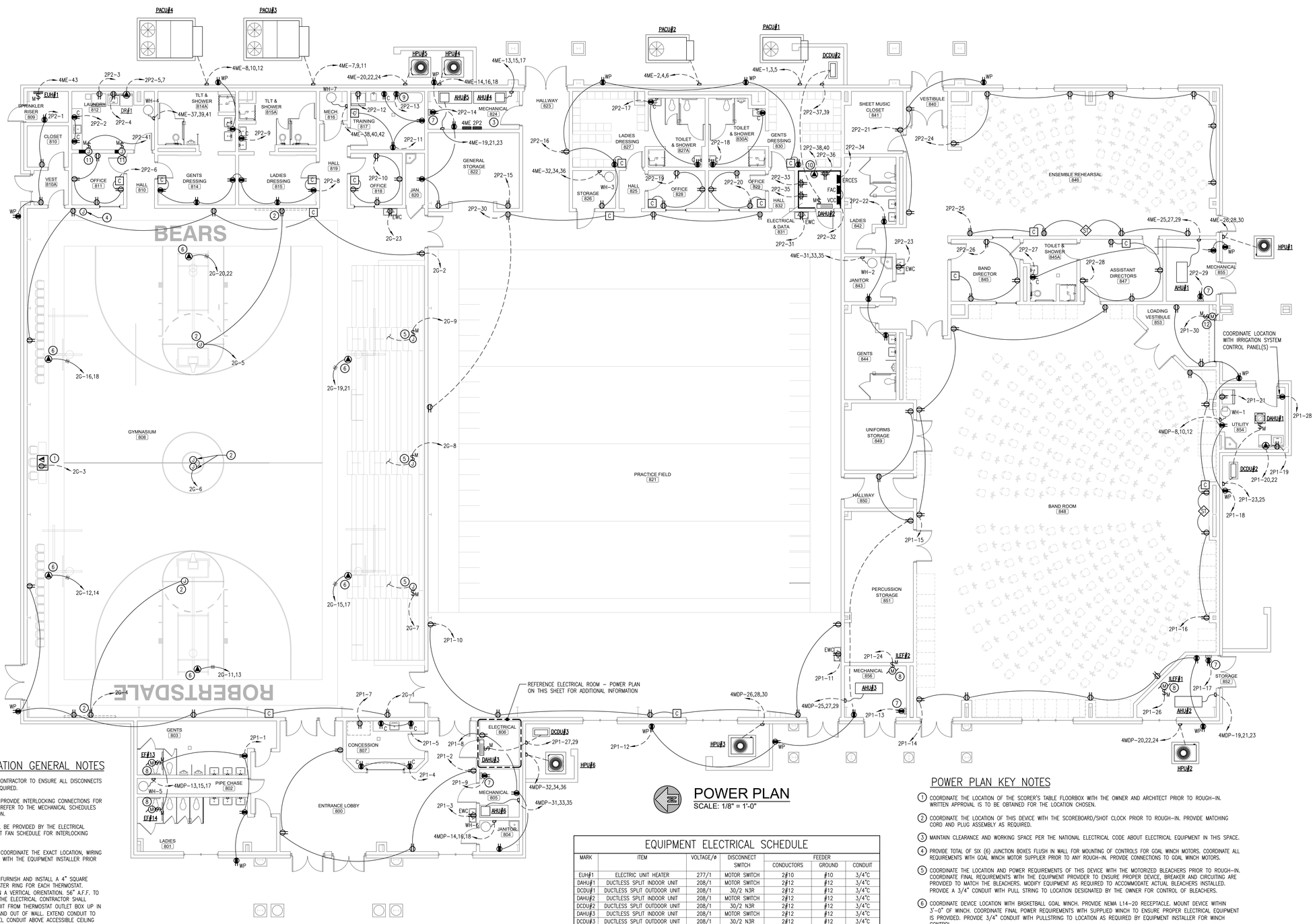

EQUIPMENT COORDINATION GENERAL NOTES

1. COORDINATE WITH THE MECHANICAL CONTRACTOR TO ENSURE ALL DISCONNECTS AND/OR VFD'S ARE PROVIDED AS REQUIRED.
2. THE ELECTRICAL CONTRACTOR SHALL PROVIDE INTERLOCKING CONNECTIONS FOR ALL HVAC EQUIPMENT AS REQUIRED. REFER TO THE MECHANICAL SCHEDULES FOR EXACT INTERLOCKING INFORMATION.
3. ALL EXHAUST FAN INTERLOCKS SHALL BE PROVIDED BY THE ELECTRICAL CONTRACTOR. REFER TO THE EXHAUST FAN SCHEDULE FOR INTERLOCKING REQUIREMENTS.
4. THE ELECTRICAL CONTRACTOR SHALL COORDINATE THE EXACT LOCATION, WIRING AND CONNECTION OF ALL EQUIPMENT WITH THE EQUIPMENT INSTALLER PRIOR TO INSTALLATION.
5. THE ELECTRICAL CONTRACTOR SHALL FURNISH AND INSTALL A 4" SQUARE OUTLET BOX WITH SINGLE GANG PLASTER RING FOR EACH THERMOSTAT. PLASTER RING SHALL BE MOUNTED IN A VERTICAL ORIENTATION. 56" A.F.F. TO CENTER UNLESS NOTED OTHERWISE. THE ELECTRICAL CONTRACTOR SHALL FURNISH AND INSTALL A 3/4" CONDUIT FROM THERMOSTAT OUTLET BOX UP IN WALL TO 6" ABOVE CEILING HEIGHT AND OUT OF WALL EXTEND CONDUIT TO AREA WITH ACCESSIBLE CEILING. LABEL CONDUIT ABOVE ACCESSIBLE CEILING WITH SERVED THERMOSTAT LOCATION. CONDUIT SHALL HAVE NYLON INSULATING BUSHING ON EACH END. PROVIDE PULL STRING IN CONDUIT. REFER TO MECHANICAL DRAWINGS FOR THERMOSTAT LOCATIONS. MOUNT UNIT HEATER THERMOSTATS AS REQUIRED.
6. THE ELECTRICAL CONTRACTOR SHALL FURNISH AND INSTALL A DEDICATED, 20 AMP, 120 VOLT CIRCUIT FOR EACH HVAC CONTROL PANEL. REFER TO MECHANICAL DRAWINGS FOR HVAC CONTROL PANEL LOCATIONS.
7. THE ELECTRICAL CONTRACTOR SHALL COORDINATE THE EXACT LOCATION OF ALL EQUIPMENT SITE SWITCHES PRIOR TO INSTALLATION.
8. ALL DISCONNECTS FOR EQUIPMENT SHALL BE MOUNTED SECURELY TO THE FLOOR OR STRUCTURE. THE ELECTRICAL CONTRACTOR SHALL FURNISH AND INSTALL UNISTRUT AND MOUNTING HARDWARE AS REQUIRED TO MOUNT THE DISCONNECTS. ALL EXTERIOR DISCONNECTS SHALL BE NEMA-3R.
9. CIRCUIT BREAKERS SERVING EQUIPMENT ARE BASIS OF DESIGN ONLY. EXACT CIRCUIT BREAKER AND CONDUCTOR SIZES SHALL BE COORDINATED WITH ACTUAL EQUIPMENT BEING INSTALLED PRIOR TO ORDERING OF PANELBOARD. ANY COST INCREASE ASSOCIATED WITH INCREASED CIRCUIT REQUIREMENTS SHALL BE THE RESPONSIBILITY OF THE EQUIPMENT INSTALLER. ELECTRICIAN SHALL SIZE CIRCUIT BREAKERS, CONDUCTORS, CONDUITS, AND DISCONNECTS IN ACCORDANCE WITH THE NATIONAL ELECTRIC CODE AND INDICATE THE APPROPRIATE CHANGES ON AS-BUILT DOCUMENTS.
10. IN ALL MECHANICAL ROOMS, COORDINATE WITH THE MECHANICAL CONTRACTOR TO ENSURE CODE REQUIRED CLEARANCES AND WORKING SPACES ARE MAINTAINED AT ALL ELECTRICAL EQUIPMENT.

ELECTRICAL ROOM - POWER PLAN

SCALE: 1/8" = 1'-0"

POWER PLAN

SCALE: 1/8" = 1'-0"

EQUIPMENT ELECTRICAL SCHEDULE

MARK	ITEM	VOLTAGE/ø	DISCONNECT SWITCH	FEEDER		
				CONDUCTORS	GROUND	CONDUIT
EUH#1	ELECTRIC UNIT HEATER	277/1	MOTOR SWITCH	2#10	#10	3/4"C
DAHU#1	DUCTLESS SPLIT INDOOR UNIT	208/1	MOTOR SWITCH	2#12	#12	3/4"C
DCDU#1	DUCTLESS SPLIT OUTDOOR UNIT	208/1	30/2 N3R	2#12	#12	3/4"C
DAHU#2	DUCTLESS SPLIT INDOOR UNIT	208/1	MOTOR SWITCH	2#12	#12	3/4"C
DCDU#2	DUCTLESS SPLIT OUTDOOR UNIT	208/1	30/2 N3R	2#12	#12	3/4"C
DAHU#3	DUCTLESS SPLIT INDOOR UNIT	208/1	MOTOR SWITCH	2#12	#12	3/4"C
DCDU#3	DUCTLESS SPLIT OUTDOOR UNIT	208/1	30/2 N3R	2#12	#12	3/4"C
AHU#1	AIR HANDLING UNIT	480/3	30/3 N1	3#10	#10	3/4"C
HPU#1	HEAT PUMP UNIT	480/3	30/3 N3R	3#12	#12	3/4"C
AHU#2	AIR HANDLING UNIT	480/3	60/3 N1	3#8	#10	3/4"C
HPU#2	HEAT PUMP UNIT	480/3	30/3 N3R	3#10	#10	3/4"C
AHU#3	AIR HANDLING UNIT	480/3	60/3 N1	3#8	#10	3/4"C
HPU#3	HEAT PUMP UNIT	480/3	30/3 N3R	3#10	#10	3/4"C
AHU#4	AIR HANDLING UNIT	480/3	30/3 N1	3#12	#12	3/4"C
HPU#4	HEAT PUMP UNIT	480/3	30/3 N3R	3#12	#12	3/4"C
AHU#5	AIR HANDLING UNIT	480/3	30/3 N1	3#12	#12	3/4"C
HPU#5	HEAT PUMP UNIT	480/3	30/3 N3R	3#12	#12	3/4"C
AHU#6	AIR HANDLING UNIT	480/3	30/3 N1	3#10	#10	3/4"C
HPU#6	HEAT PUMP UNIT	480/3	30/3 N3R	3#12	#12	3/4"C
PACU#1	PACKAGED AIR CONDITIONING UNIT	480/3	60/3 N3R	3#8	#10	3/4"C
PACU#2	PACKAGED AIR CONDITIONING UNIT	480/3	60/3 N3R	3#8	#10	3/4"C
PACU#3	PACKAGED AIR CONDITIONING UNIT	480/3	60/3 N3R	3#8	#10	3/4"C
PACU#4	PACKAGED AIR CONDITIONING UNIT	480/3	60/3 N3R	3#8	#10	3/4"C
WH-1	WATER HEATER	480/3	30/3 N1	3#12	#12	3/4"C
DRY1	ELECTRIC DRYER	208/1	RECEPT	3#10	#10	3/4"C

EQUIPMENT ELECTRICAL SCHEDULE NOTES:

1. COORDINATE WITH THE MECHANICAL CONTRACTOR TO ENSURE ALL DISCONNECTS AND/OR VFD'S ARE PROVIDED AS REQUIRED.
2. DUCTLESS SPLIT SYSTEM INDOOR UNIT RECEIVES POWER FROM OUTDOOR UNIT. COORDINATE REQUIREMENTS WITH THE MECHANICAL CONTRACTOR PRIOR TO ROUGH-IN.
3. REFERENCE TYPICAL EXTERIOR AC/HP ELECTRICAL CONNECTION DETAIL FOR EXTERIOR DISCONNECT MOUNTING AND CONNECTION REQUIREMENTS FOR ALL EXTERIOR HVAC EQUIPMENT.
4. DUPLICATE VOLTAGE, DISCONNECT, AND FEEDER SIZE FOR WH-2, WH-3, WH-4, WH-5, WH-6, & WH-7.

POWER PLAN KEY NOTES

1. COORDINATE THE LOCATION OF THE SCORER'S TABLE FLOORBOX WITH THE OWNER AND ARCHITECT PRIOR TO ROUGH-IN. WRITTEN APPROVAL IS TO BE OBTAINED FOR THE LOCATION CHOSEN.
2. COORDINATE THE LOCATION OF THIS DEVICE WITH THE SCOREBOARD/SHOT CLOCK PRIOR TO ROUGH-IN. PROVIDE MATCHING CORD AND PLUG ASSEMBLY AS REQUIRED.
3. MAINTAIN CLEARANCE AND WORKING SPACE PER THE NATIONAL ELECTRICAL CODE ABOUT ELECTRICAL EQUIPMENT IN THIS SPACE.
4. PROVIDE TOTAL OF SIX (6) JUNCTION BOXES FLUSH IN WALL FOR MOUNTING OF CONTROLS FOR GOAL WINCH MOTORS. COORDINATE ALL REQUIREMENTS WITH GOAL WINCH MOTOR SUPPLIER PRIOR TO ANY ROUGH-IN. PROVIDE CONNECTIONS TO GOAL WINCH MOTORS.
5. COORDINATE THE LOCATION AND POWER REQUIREMENTS OF THIS DEVICE WITH THE MOTORIZED BLEACHERS PRIOR TO ROUGH-IN. COORDINATE FINAL REQUIREMENTS WITH THE EQUIPMENT PROVIDER TO ENSURE PROPER DEVICE, BREAKER AND CIRCUITING ARE PROVIDED TO MATCH THE BLEACHERS. MODIFY EQUIPMENT AS REQUIRED TO ACCOMMODATE ACTUAL BLEACHERS INSTALLED. PROVIDE A 3/4" CONDUIT WITH PULL STRING TO LOCATION DESIGNATED BY THE OWNER FOR CONTROL OF BLEACHERS.
6. COORDINATE DEVICE LOCATION WITH BASKETBALL GOAL WINCH. PROVIDE NEMA L14-20 RECEPTACLE. MOUNT DEVICE WITHIN 3'-0" OF WINCH. COORDINATE FINAL POWER REQUIREMENTS WITH SUPPLIED WINCH TO ENSURE PROPER ELECTRICAL EQUIPMENT IS PROVIDED. PROVIDE 3/4" CONDUIT WITH PULLSTRING TO LOCATION AS REQUIRED BY EQUIPMENT INSTALLER FOR WINCH CONTROL.
7. COORDINATE THE FINAL LOCATION AND POWER REQUIREMENTS OF THE HVAC CONTROL PANEL WITH THE CONTROLS CONTRACTOR PRIOR TO ROUGH IN. CIRCUIT NUMBER AS INDICATED. CONNECT TO ADDITIONAL HVAC CONTROL PANELS ON SAME CIRCUIT.
8. PROVIDE CONNECTION TO MECHANICAL EQUIPMENT AS INDICATED ON MECHANICAL SCHEDULES. PROVIDE POWER RELAY AT VOLTAGE REQUIRED BY THE MECHANICAL CONTRACTOR FOR CONTROL OF 120V FAN. COORDINATE ALL WORK WITH THE MECHANICAL CONTRACTOR.
9. COORDINATE FINAL REQUIREMENTS OF WHIRLPOOL WITH THE OWNER TO ENSURE PROPER BREAKER, CIRCUIT, AND DISCONNECT SIZE ARE PROVIDED.
10. COORDINATE FINAL POWER REQUIREMENTS WITH THE OWNER TO ENSURE PROPER BREAKER SIZE, CIRCUIT SIZE, AND RECEPTACLE SIZE ARE ALL PROVIDED.
11. COORDINATE DEVICE LOCATIONS WITH SMOKE DAMPER.
12. PROVIDE POWER CONNECTION AS REQUIRED TO MOTORIZED BAY DOOR.

AUTOMATIC RECEPTACLE CONTROLS HAVE NOT BEEN PROVIDED; IN ACCORDANCE WITH THE EXCEPTION TO ASHRAE 90.1 – 2013, SECTION 8.4.2

BUILDING METERING HAS NOT BEEN PROVIDED; IN ACCORDANCE WITH THE EXCEPTION TO ASHRAE 90.1 – 2013, SECTION 8.4.3

H.M. YONGE & ASSOCIATES, INC.
CONSULTING ENGINEERS // EST. 1988
51 EAST GREGORY STREET, PENSACOLA, FLORIDA 32502, PHONE: (850)434-2661
253 ST. ANTHONY STREET, MOBILE, ALABAMA 36603, PHONE: (251)690-7446

ADDITIONS TO ROBERTSDALE HIGH SCHOOL

ROBERTSDALE, ALABAMA

FOR THE

BALDWIN COUNTY BOARD OF EDUCATION

McKEE and ASSOCIATES
ARCHITECTS, INC.
631 SOUTH HULL STREET, MONTGOMERY, ALABAMA 36104 (334) 834-9933

SHEET TITLE : POWER PLAN

MCKEE JOB # : 23-195

DRAWN BY : RDH

DATE: 10.11.2023

REVISED DATE:

REVISED DATE:

REVISED DATE:

SHEET NO. : E2.1

- J:\Jobs_Active\23108 Robertsdale High School Band Room\23108E21 POWER PLAN.dwg
- Thursday, October 5, 2023 10:24:28 AM

RDH> J:\Jobs_Active\23108 Robertsdale High School Band Room\23108E21 POWER PLAN.dwg 09/05/23 10:44

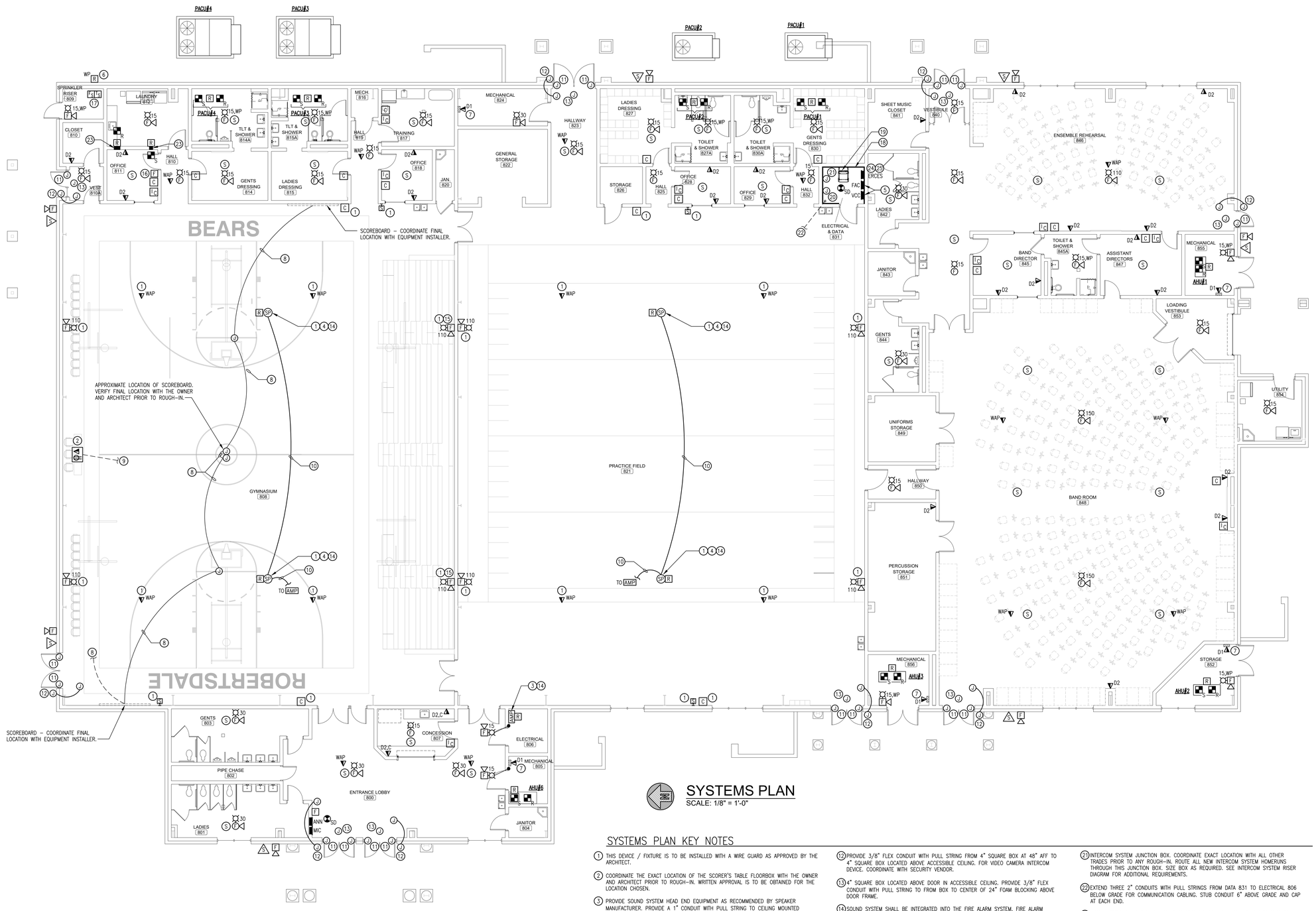

SYSTEMS PLAN
SCALE: 1/8" = 1'-0"

INTERCOM SPEAKERS AND CALL-IN STATIONS ARE NOT INDICATED WITH SPEAKER WIRING: CONTRACTOR SHALL PROVIDE INTERCOM WIRING BETWEEN SPEAKERS AND CALL-IN STATIONS. MAXIMUM FOUR SPEAKERS PER INTERCOM CIRCUIT, ONE SPEAKER WITH ONE CALL-IN STATION PER INTERCOM CIRCUIT, AND ONE OUTDOOR SPEAKER PER INTERCOM CIRCUIT. INTERCOM CIRCUIT HOMERUN SHALL BE RUN BACK TO DATA ROOM AND TERMINATED AT INTERCOM HEAD-END EQUIPMENT. REFERENCE INTERCOM RISER DIAGRAM FOR ADDITIONAL INFORMATION. INTERCOM SYSTEM REQUIREMENTS SHALL BE COORDINATED WITH THE SPECIFICATIONS AND INTERCOM SYSTEM INSTALLER.

CONTRACTOR SHALL COORDINATE WITH THE ARCHITECTURAL REFLECTED CEILING PLAN FOR ALL CEILING MOUNTED FIRE ALARM INTERCOM, AND DATA DEVICE LOCATIONS, PRIOR TO ANY ROUGH-IN.

SYSTEMS GENERAL NOTES

1. COORDINATE WITH THE MECHANICAL CONTRACTOR, THE EXACT LOCATION OF THE AIR HANDLER/ROOF TOP UNIT SHUTDOWNS (AT THE CONTROL PANEL OR AT THE UNIT).
2. VERIFY EXACT NUMBER AND LOCATION OF DUCT DETECTORS FROM MECHANICAL PLAN, NOT RISER DIAGRAM.
3. VERIFY EXACT NUMBER AND LOCATION OF TAMPER AND FLOW SWITCHES FROM PLUMBING PLANS, NOT RISER DIAGRAM.
4. VERIFY LOCATION AND MOUNTING HEIGHT OF ALL DEVICES WITH FURNITURE PLAN AND OWNER PRIOR TO ROUGH IN (SPECIFICALLY AT THE FURNITURE IN THE CLASSROOMS).

SYSTEMS PLAN KEY NOTES

1. THIS DEVICE / FIXTURE IS TO BE INSTALLED WITH A WIRE GUARD AS APPROVED BY THE ARCHITECT.
2. COORDINATE THE EXACT LOCATION OF THE SCORER'S TABLE FLOORBOX WITH THE OWNER AND ARCHITECT PRIOR TO ROUGH-IN. WRITTEN APPROVAL IS TO BE OBTAINED FOR THE LOCATION CHOSEN.
3. PROVIDE SOUND SYSTEM HEAD END EQUIPMENT AS RECOMMENDED BY SPEAKER MANUFACTURER. PROVIDE A 1" CONDUIT WITH PULL STRING TO CEILING MOUNTED SPEAKERS IN GYM. ALSO PROVIDE A 1" CONDUIT WITH PULL STRING TO SCORER'S TABLE FLOOR BOX. PROVIDE SPEAKER CONTROLS AS RECOMMENDED BY SPEAKER MANUFACTURER.
4. ORIENT SPEAKERS PER MANUFACTURER'S RECOMMENDATIONS TO PROVIDE OPTIMAL SOUND. PROVIDE SAFETY MOUNTING HARDWARE AND WIRE GUARDS AS REQUIRED. COORDINATE THE LOCATION WITH THE BEAMS/JOISTS/CEILING AND CENTER THE SPEAKERS WITH THE ROOM. THE LOUDSPEAKERS SHALL BE SOUNDSPHERE 110A OR EQUAL. SEE SPECIFICATIONS FOR ADDITIONAL INFORMATION.
5. NEW FIRE ALARM SYSTEM CONTROL PANEL WITH VOICE COMMAND CENTER.
6. ELECTRIC FIRE BELL. COORDINATE WITH FIRE PROTECTION INSTALLER. PROVIDE ALL CONNECTIONS AS REQUIRED.
7. DATA DROP FOR HVAC CONTROL PANEL. CONTRACTOR TO COORDINATE EXACT LOCATION WITH MECHANICAL PRIOR TO ANY ROUGH-IN.
8. 3/4" CONDUIT WITH PULLSTRING BETWEEN SHOT CLOCKS AND SCOREBOARDS. PROVIDE SINGLE 1" CONDUIT WITH PULLSTRING TO SCORER'S TABLE FLOORBOX.
9. PROVIDE A 1" AND 1-1/4" CONDUIT WITH PULL STRING TO COMMUNICATIONS BACKBOARD FOR COMMUNICATIONS WIRING. COORDINATE FINAL REQUIREMENTS WITH THE OWNER PRIOR TO ROUGH-IN.
10. 3/4" CONDUIT WITH PULL STRING.
11. PROVIDE 3/8" FLEX CONDUIT WITH PULL STRING FROM 4" SQUARE BOX AT 48" AFF TO 4" SQUARE BOX LOCATED ABOVE ACCESSIBLE CEILING. FOR VIDEO CAMERA INTERCOM DEVICE. COORDINATE WITH SECURITY VENDOR.
12. PROVIDE 3/8" FLEX CONDUIT WITH PULL STRING FROM 4" SQUARE BOX AT 48" AFF TO 4" SQUARE BOX LOCATED ABOVE ACCESSIBLE CEILING. FOR VIDEO CAMERA INTERCOM DEVICE. COORDINATE WITH SECURITY VENDOR.
13. 4" SQUARE BOX LOCATED ABOVE DOOR IN ACCESSIBLE CEILING. PROVIDE 3/8" FLEX CONDUIT WITH PULL STRING TO FROM BOX TO CENTER OF 24" FOAM BLOCKING ABOVE DOOR FRAME.
14. SOUND SYSTEM SHALL BE INTEGRATED INTO THE FIRE ALARM SYSTEM. FIRE ALARM SIGNALS SHALL BE BROADCAST THROUGH THE SOUND SYSTEM IN THE EVENT OF AN EMERGENCY. SOUND SYSTEM INSTALLER SHALL COORDINATE WITH THE FIRE ALARM CONTRACTOR FOR ALL INTERCONNECTION REQUIREMENTS. PROVIDE BATTERY BACKUP SYSTEM AS REQUIRED.
15. COORDINATE MOUNTING HEIGHT OF DEVICE WITH BLEACHERS. DEVICE SHALL BE LOCATED 80" ABOVE TOP LEVEL OF BLEACHERS.
16. COORDINATE WITH OWNER TO PROVIDE PULL STATION IN A CONSTANTLY ATTENDED LOCATION.
17. COORDINATE QUANTITY AND LOCATION OF FLOW AND TAMPER SWITCHES WITH FIRE PROTECTION INSTALLER PRIOR TO ROUGH-IN.
18. PROVIDE 3/4" x 4' PLYWOOD BACKBOARD SPANNING EACH WALL OF THE DATA ROOM. PROVIDE 6" CLEARANCE ABOVE FLOOR. ALL POWER AND DATA RECEPTACLES SHALL BE FLUSH WITH BACKBOARD. PROVIDE #6 GROUND IN 3/4" EMT CONDUIT FROM SERVING ELECTRICAL PANEL TO BACKBOARD. COIL 10' SLACK AT BACKBOARD. PROVIDE GROUND BUS BAR (HARGER GBI SERIES) AS REQUIRED BY COMMUNICATIONS CONTRACTOR.
19. FULL HEIGHT FLOOR MOUNT EQUIPMENT RACK WITH EQUIPMENT MOUNTING HARDWARE AS REQUIRED. REFER TO RACK ELEVATION DETAIL. CONTRACTOR SHALL PROVIDE ALL EQUIPMENT INCLUDING BUT NOT LIMITED TO SWITCHES, ROUTERS, FIBER DRAWERS, PATCH PANELS, JACKS, CORDS...ETC AS REQUIRED TO INTERFACE WITH EXISTING DATA SYSTEM. INSTALLER SHALL HAVE RCDD ON STAFF. SEE SITE PLAN FOR INCOMING FIBER CONNECTION REQUIREMENTS.
20. CLOCK SYSTEM WIRELESS TRANSMITTER. COORDINATE EXACT LOCATION WITH ALL OTHER TRADES PRIOR TO ANY ROUGH-IN. SIZE BOX AS REQUIRED.
21. INTERCOM SYSTEM JUNCTION BOX. COORDINATE EXACT LOCATION WITH ALL OTHER TRADES PRIOR TO ANY ROUGH-IN. ROUTE ALL NEW INTERCOM SYSTEM HOMERUNS THROUGH THIS JUNCTION BOX. SIZE BOX AS REQUIRED. SEE INTERCOM SYSTEM RISER DIAGRAM FOR ADDITIONAL REQUIREMENTS.
22. EXTEND THREE 2" CONDUITS WITH PULL STRINGS FROM DATA 831 TO ELECTRICAL 806 BELOW GRADE FOR COMMUNICATION CABLING. STUB CONDUIT 6" ABOVE GRADE AND CAP AT EACH END.
23. SMOKE DAMPER. PROVIDE ALL CONNECTIONS AS REQUIRED TO FIRE ALARM CONTROL PANEL ALONG WITH DUCT DETECTOR TO CLOSE DAMPER. COORDINATE CONNECTION REQUIREMENTS WITH MECHANICAL.
24. ALLOWANCE #1:TESTING SHALL BE PERFORMED TO DETERMINE THE NEED FOR AN EMERGENCY RADIO COMMUNICATION ENHANCEMENT SYSTEM (ERCES). PROVIDE AN ALLOWANCE OF $4,500.00 FOR ERRC SYSTEM TESTING.
25. ALLOWANCE #2: PROVIDE A COMPLETE EMERGENCY RADIO COMMUNICATION ENHANCEMENT SYSTEM (ERCES). PROVIDE ALL DEDICATED 120V POWER CONNECTIONS AS REQUIRED BY EQUIPMENT VENDOR. PROVIDE AN ALLOWANCE OF $150,000.00 FOR ERCES SYSTEM DESIGN AND INSTALLATION.

H.M. YONGE & ASSOCIATES, INC.
CONSULTING ENGINEERS // EST. 1988
51 EAST GREGORY STREET, PENSACOLA, FLORIDA 32502, PHONE: (850)434-2661
253 ST. ANTHONY STREET, MOBILE, ALABAMA 36603, PHONE: (251)690-7446

ADDITIONS TO ROBERTSDALE HIGH SCHOOL
ROBERTSDALE, ALABAMA
FOR THE
BALDWIN COUNTY BOARD OF EDUCATION

McKEE and ASSOCIATES
ARCHITECTS, INC.
631 SOUTH HULL STREET, MONTGOMERY, ALABAMA 36104 (334) 834-9933

SHEET TITLE : SYSTEMS PLAN

MCKEE JOB # : 23-195

DRAWN BY : RDH

DATE: 10.11.2023

REVISED DATE:

REVISED DATE:

REVISED DATE:

SHEET NO. : E3.1

- J:\Jobs_Active\23108 Robertsdale High School Band Room\23108E31 SYSTEMS PLAN.dwg
- Thursday, October 5, 2023 10:24:28 AM

RDH> J:\Jobs_Active\23108 Robertsdale High School Band Room\23108E31 SYSTEMS PLAN.dwg 09/05/23 09:59

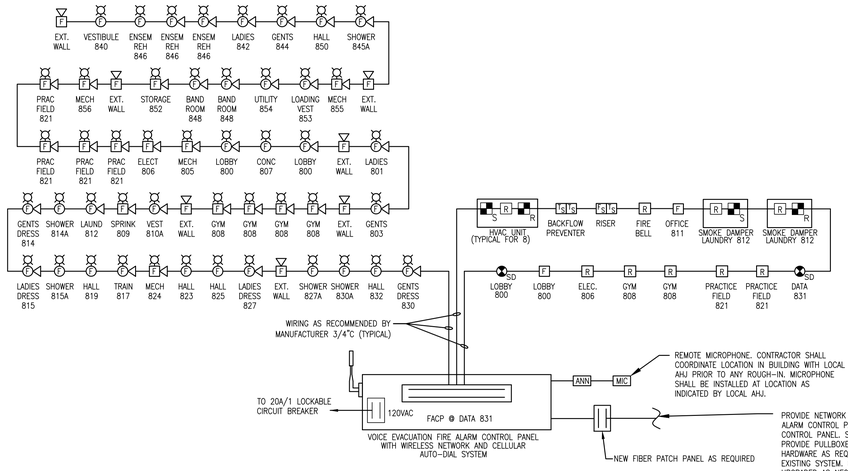

FIRE ALARM SYSTEM RISER DIAGRAM

SCALE: NONE

FIRE ALARM GENERAL NOTES:

a. VERIFY EXACT NUMBER OF DEVICES FROM FLOOR PLAN, NOT RISER DIAGRAM.

b. THE NAC CIRCUITS ARE SHOWN DIAGRAMATIC. MAXIMUM NUMBER OF DEVICES ON ANY CIRCUIT IS LIMITED. PROVIDE ADDITIONAL HARDWARE AS REQUIRED.

c. SLC LOOP TO CONNECT ALL FIRE ALARM SYSTEM DEVICES FROM FLOOR PLANS. PROVIDE ADDITIONAL LOOP(S) AS REQUIRED.

d. BATTERY CABINETS AND NAC EXPANDERS SHALL BE LOCATED BELOW OR ADJACENT TO FIRE ALARM CONTROL PANEL.

e. ALL FIRE ALARM WORK SHALL BE PERFORMED BY QUALIFIED PERSONNEL AS DEFINED IN NFPA 72 (LATEST EDITION) SECTION(S) 4.3.3 AND 4.4.4.2. SHOP DRAWINGS SHALL COMPLY WITH NFPA 72 SECTION 4.5.1.1.

f. SPLICING OF FIRE ALARM WIRING IS STRICTLY PROHIBITED.

g. UPON PROJECT COMPLETION THE CAMPUS WIDE FIRE ALARM SYSTEM SHALL BE RECERTIFIED AND TESTED. PROVIDE WITH A RECORD OF COMPLETION AS REQUIRED IN NFPA 72 SECTION 4.5.2.

h. THE FIRE ALARM INSTALLER SHALL BE LICENSED AS A CERTIFIED FIRE ALARM CONTRACTOR. THE CONTRACTOR MUST HAVE A NICET LEVEL III TECHNICIAN IN A POSITION OF RESPONSIBILITY, AND THE LICENSE SHALL BE ISSUED IN THE NAME OF THE CERTIFICATE HOLDER AND THE CONTRACTOR. TECHNICIANS WORKING FOR THE CERTIFIED CONTRACTOR MUST HOLD A CURRENT NICET LEVEL II, OR EQUIVALENT, CERTIFICATION. CONTRACTORS WISHING TO BID ON FIRE ALARM WORK SHALL SHOW EVIDENCE AT THE PRE-BID CONFERENCE THAT HE/SHE MEETS THE CERTIFICATION REQUIREMENTS AND HOLD A PERMIT ISSUED BY THE STATE OF ALABAMA FIRE MARSHAL.

i. THE FIRE ALARM SYSTEM SHALL BE MONITORED BY AN APPROVED SUPERVISING STATION IN ACCORDANCE WITH NFPA 72. AUTOMATIC TELEPHONE DIALING DEVICES USED TO TRANSMIT AN EMERGENCY ALARM SHALL NOT BE CONNECTED TO ANY FIRE DEPARTMENT TELEPHONE NUMBER UNLESS APPROVED BY THE FIRE CHIEF.

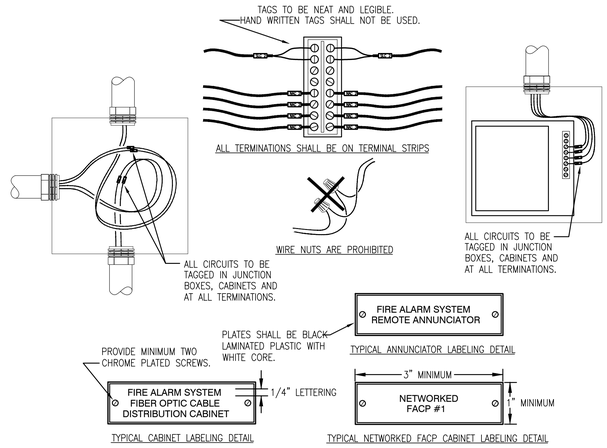

FIRE ALARM SYSTEM LABELING DETAIL

SCALE: NONE

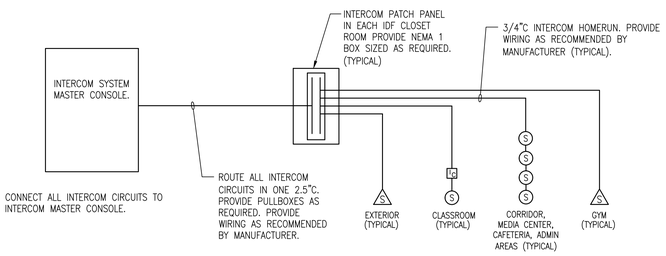

INTERCOM RISER DIAGRAM

SCALE: NONE

INTERCOM SYSTEM GENERAL NOTES:

1. VERIFY EXACT NUMBER OF DEVICES FROM FLOOR PLAN, NOT RISER DIAGRAM.

PROVIDE ARC-FLASH HAZARD WARNING LABEL IN ACCORDANCE WITH NEC 110.16.

THE ELECTRICAL CONTRACTOR SHALL FIELD MARK ALL ELECTRICAL SERVICE EQUIPMENT WITH A CONSPICUOUS AND PERMANENT LABEL THAT INDICATES THE AVAILABLE FAULT CURRENT AS FOLLOWS PER NEC 110.24:

"Panel XX"
"Maximum available fault current = ##,### Amps"
"Month DD, Year"

THE LABEL SHOULD BE OF SUFFICIENT DURABILITY TO WITHSTAND THE ENVIRONMENT INVOLVED.

THE ELECTRICAL CONTRACTOR SHALL FIELD MARK ALL PANEL BOARDS IN AREA OF WORK THAT ARE TO REMAIN TO INDICATE ORIGIN OF POWER SUPPLY.

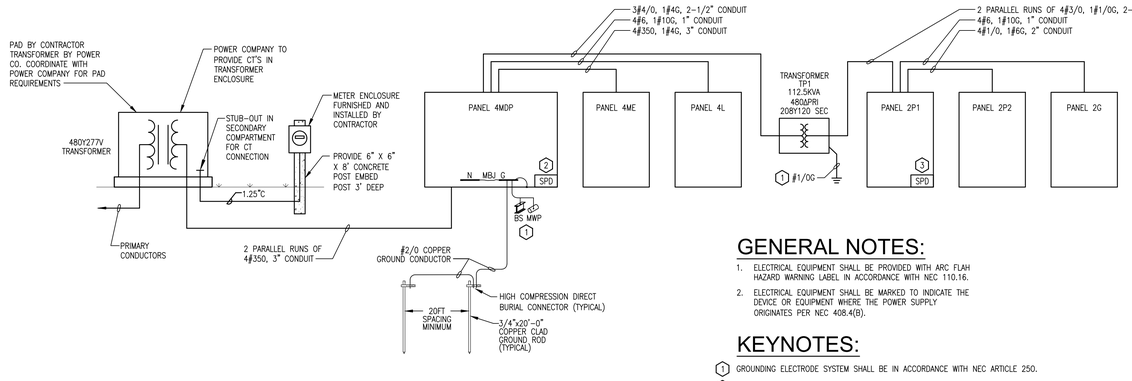

SINGLE LINE RISER DIAGRAM

SCALE: NONE

GENERAL NOTES:

1. ELECTRICAL EQUIPMENT SHALL BE PROVIDED WITH ARC FLAH HAZARD WARNING LABEL IN ACCORDANCE WITH NEC 110.16.
2. ELECTRICAL EQUIPMENT SHALL BE MARKED TO INDICATE THE DEVICE OR EQUIPMENT WHERE THE POWER SUPPLY ORIGINATES PER NEC 408.4(B).

KEYNOTES:

1. GROUNDING ELECTRODE SYSTEM SHALL BE IN ACCORDANCE WITH NEC ARTICLE 250.
2. PROVIDE INTERNAL, SERVICE ENTRANCE RATED, CATEGORY-C SURGE PROTECTION DEVICE, 10-MODE, 240kA PER PHASE.
3. PROVIDE INTERNAL, SINE WAVE TRACKING, CATEGORY-C SURGE PROTECTION DEVICE, 10-MODE, 120kA PER PHASE.
4. PROVIDE AN AID TO CONSTRUCTION ALLOWANCE (#3) OF $30,000.00 FOR ALL SERVICE RELATED FEES. COORDINATE ALL REQUIREMENTS WITH THE POWER COMPANY.

H.M. YONGE & ASSOCIATES, INC.
CONSULTING ENGINEERS // EST. 1988
51 EAST GREGORY STREET
PENSACOLA, FLORIDA 32502
PHONE: (850)434-2661
253 ST. ANTHONY STREET
MOBILE, ALABAMA 36603
PHONE: (251)690-7446

ADDITIONS
TO
ROBERTSDALE HIGH SCHOOL
ROBERTSDALE, ALABAMA
FOR THE
BALDWIN COUNTY BOARD OF EDUCATION

McKEE and ASSOCIATES
ARCHITECTS, INC.
631 SOUTH HULL STREET . MONTGOMERY , ALABAMA 36104 (334) 834-9933

SHEET TITLE : ELECTRICAL RISER DIAGRAMS

MCKEE JOB # : 23-195

DRAWN BY : RDH

DATE: 10.11.2023

REVISED DATE:

REVISED DATE:

REVISED DATE:

SHEET NO. : E4.1

- J:\Jobs_Active\23108 Robertsdale High School Band Room\23108E41 ELECTRICAL RISERS.dwg
- Thursday, October 5, 2023 10:24:26 AM

RDH> J:\Jobs_Active\23108 Robertsdale High School Band Room\23108E41 ELECTRICAL RISERS.dwg 09/08/23 09:40

PANEL 4MDP SCHEDULE

NEMA 1 SURFACE MOUNT — (A) 19,078 SCA AVAILABLE
600A M.B. 480Y/277V 3ø 4W — 25,000 AIC RATING

CKT NO.	LOAD DESCRIPTION	BREAKER POLE	BREAKER AMP	KVA	KVA	BREAKER AMP	BREAKER POLE	LOAD DESCRIPTION	CKT NO.
1									2
3	PANEL 4L	3	60	33.0	183.2	300	3	PANEL 4ME	4
5									6
7									8
9	PANEL 2P1 (THROUGH XFMR TP1)	3	225	80.2	6.0	15	3	WATER HEATER WH-1	10
11									12
13									14
15	WATER HEATER WH-5	3	15	6.0	6.0	15	3	WATER HEATER WH-6	16
17									18
19									20
21	AIR HANDLING UNIT AHU#2	3	45	29.0	13.8	25	3	HEAT PUMP UNIT HPU#2	22
23									24
25									26
27	AIR HANDLING UNIT AHU#3	3	45	29.0	13.8	25	3	HEAT PUMP UNIT HPU#3	28
29									30
31									32
33	AIR HANDLING UNIT AHU#6	3	30	16.2	6.9	15	3	HEAT PUMP UNIT HPU#6	34
35									36
37									38
39	SPARE	3	100	·	·	125	3	SPACE	40
41									42
43									44
45	SPACE	3	125	·	·	125	3	SPACE	46
47									48
49									50
51	SPACE	3	30	·	·	30	3	SURGE PROTECTION DEVICE	52
53									54

CONNECTED LOAD 423.1 KVA

(A) PROVIDE PHENOLIC LABEL AFFIXED TO PANEL INDICATING THIS VALUE ALONG WITH THE DATE OF THE INSTALLATION.

PANEL 4ME SCHEDULE

NEMA 1 SURFACE MOUNT
400A M.L.O. 480Y/277V 3ø 4W — 18,000 AIC RATING

CKT NO.	LOAD DESCRIPTION	BREAKER POLE	BREAKER AMP	KVA	KVA	BREAKER AMP	BREAKER POLE	LOAD DESCRIPTION	CKT NO.
1									2
3	PACKAGED AIR CONDITIONING UNIT PACU#1	3	40	20.9	20.9	40	3	PACKAGED AIR CONDITIONING UNIT PACU#2	4
5									6
7									8
9	PACKAGED AIR CONDITIONING UNIT PACU#3	3	50	26.5	26.5	50	3	PACKAGED AIR CONDITIONING UNIT PACU#4	10
11									12
13									14
15	AIR HANDLING UNIT AHU#4	3	15	9.5	5.1	15	3	HEAT PUMP UNIT HPU#4	16
17									18
19									20
21	AIR HANDLING UNIT AHU#5	3	20	10.9	5.8	15	3	HEAT PUMP UNIT HPU#5	22
23									24
25									26
27	AIR HANDLING UNIT AHU#1	3	30	19.0	11.1	20	3	HEAT PUMP UNIT HPU#1	28
29									30
31									32
33	WATER HEATER WH-2	3	15	6.0	6.0	15	3	WATER HEATER WH-3	34
35									36
37									38
39	WATER HEATER WH-4	3	15	6.0	6.0	15	3	WATER HEATER WH-7	40
41									42
43	ELECTRIC UNIT HEATER - SPRINKLER	1	15	3.0					44
45	SPARE	1	20	·	·	20	3	SPARE	46
47	SPARE	1	20	·					48
49									50
51	SPACE	3	60	·	·	60	3	SPACE	52
53									54

CONNECTED LOAD 183.2 KVA

PANEL 4L SCHEDULE

NEMA 1, SURFACE MOUNT
100A M.L.O. 480Y/277V 3ø 4W — 18,000 AIC RATING

CKT NO.	LOAD DESCRIPTION	BREAKER POLE	BREAKER AMP	KVA	KVA	BREAKER AMP	BREAKER POLE	LOAD DESCRIPTION	CKT NO.
1	LTS/EF - ELEC, MECH, JANITOR, CONCESSION, LOBBY, GENTS, LADIES	1	20	0.9	2.3	20	1	LIGHTS/EF'S - EAST SIDE	2
3	LIGHTS/EF - MECH, PERC, HALL, UNIF, GENTS, JANITOR, LADIES, SHEET	1	20	1.1	3.2	20	1	LIGHTS - BAND ROOM, STORAGE	4
5	LIGHTS/EF - BAND DIR, ASSIST, UTIL, TLT&SHWR, MECH, LOAD, ENSEMBLE	1	20	1.8	3.0	20	1	LIGHTS - GYMNASIUM WEST	6
7	LIGHTS - GYMNASIUM MIDDLE	1	20	1.5	3.0	20	1	LIGHTS - GYMNASIUM EAST	8
9	LIGHTS - GYM SEATING & HALLS	1	20	2.0	3.7	20	1	LIGHTS - PRACTICE FIELD WEST	10
11	LIGHTS - PRACTICE FIELD MIDDLE	1	20	1.9	3.8	20	1	LIGHTS - PRACTICE FIELD EAST, HALL	12
13	BUILDING LIGHTS - SOUTH	1	20	0.7	0.4	20	1	BUILDING LIGHTS - NORTH	14
15	POLE LIGHTS - SOUTH DRIVE	1	20	0.6	1.1	20	1	POLE LIGHTS - PARKING	16
17	POLE LIGHTS - PARKING	1	20	0.9	1.1	20	1	POLE LIGHTS - PARKING	18
19	SPARE	1	20	·	·	20	1	SPARE	20
21	SPARE	1	20	·	·	20	1	SPARE	22
23	SPARE	1	20	·	·	20	1	SPARE	24
25	SPACE	1	20	·	·	20	1	SPACE	26
27	SPACE	1	20	·	·	20	1	SPACE	28
29	SPACE	1	20	·	·	20	1	SPACE	30

CONNECTED LOAD 33.0 KVA

(A) PROVIDE PHENOLIC LABEL AFFIXED TO PANEL INDICATING THIS VALUE ALONG WITH THE DATE OF THE INSTALLATION.

PANEL 2P1 SCHEDULE

NEMA 3R, SURFACE MOUNT
400A M.B. 208Y/120V 3ø 4W — 22,000 AIC RATING

CKT NO.	LOAD DESCRIPTION	BREAKER POLE	BREAKER AMP	KVA	KVA	BREAKER AMP	BREAKER POLE	LOAD DESCRIPTION	CKT NO.
1	RECEPT/EF - GENTS, LADIES, W. EXT	1	20	0.9	0.8	20	1	RECEPT - ENTRANCE LOBBY 800	2
3	WATER COOLER - ENTR. LOBBY (G)	1	20	0.4	0.4	20	1	RECEPT - CONCESSION 807	4
5	RECEPT - CONCESSION 807	1	20	0.4	·	20	1	SPARE	6
7	RECEPT - CONCESSION 807 (G)	1	20	0.6	0.6	20	1	RECEPT - ELECT, MECH, JAN	8
9	DDC PANEL - MECH 805	1	20	0.2	0.9	20	1	RECEPT - PRACTICE FIELD 821	10
11	WATER COOLER - PRAC. FIELD (G)	1	20	0.4	1.1	20	1	RECEPT - WEST EXTER, MECH, HALL, PERCUSSION & UNIFORM STORAGE	12
13	DDC PANEL - MECH 856	1	20	0.2	1.1	20	1	RECEPT - BAND RM, STO, W. EXT	14
15	RECEPT - BAND ROOM 848	1	20	0.8	1.3	20	1	RECEPT - BAND ROOM 848	16
17	DDC PANEL - STORAGE 852	1	20	0.2	0.9	20	1	RECEPT - S. EXT, UTIL, LOAD VEST	18
19	WASHING MACHINE - UTILITY 854 (G)	1	20	1.2	4.9	30	2	DRYER - UTILITY 854 (G)	20
21	ICE MACHINE - UTILITY 854 (G)	1	20	1.2					22
23	DUCTLESS SPLIT SYSTEM - UTILITY	2	15	1.7	0.7	20	1	EXHAUST FAN - MECH 856	24
25					0.7	20	1	EXHAUST FAN - STORAGE 852	26
27	DUCTLESS SPLIT SYSTEM - ELECT	2	20	1.8	0.6	20	1	IRRIGATION CONTROLLER - UTILITY	28
29					0.6	20	1	MOTORIZED BAY DOOR - LOADING	30
31	SPARE	1	20	·	·	20	1	SPARE	32
33	SPARE	1	20	·	·	20	1	SPARE	34
35	SPARE	1	20	·	·	20	1	SPARE	36
37	SPARE	1	20	·	·	20	1	SPARE	38
39	SPARE	1	20	·	·	20	1	SPARE	40
41	SPARE	1	20	·	·	20	1	SPARE	42
43	SPACE	1	20	·					44
45	SPACE	1	20	·	·	30	3	SURGE PROTECTION DEVICE	46
47	SPACE	1	20	·					48
49									50
51	PANEL 2P2	3	150	38.6	17.0	60	3	PANEL 2G	52
53									54

CONNECTED LOAD 80.2 KVA

(G) PROVIDE GROUND-FAULT CIRCUIT INTERRUPTER TYPE BREAKER.

PANEL 2G SCHEDULE

NEMA 1, SURFACE MOUNT
100A M.L.O. 208Y/120V 3ø 4W — 22,000 AIC RATING

CKT NO.	LOAD DESCRIPTION	BREAKER POLE	BREAKER AMP	KVA	KVA	BREAKER AMP	BREAKER POLE	LOAD DESCRIPTION	CKT NO.
1	RECEPT - GYM 808, NORTH EXTER	1	20	1.1	0.9	20	1	RECEPT - GYM 808	2
3	SCOREKEEPER'S TABLE - GYM 808	1	20	0.4	0.5	20	1	SCOREBOARD/SHOT CLOCK SOUTH	4
5	SCOREBOARD/SHOT CLOCK NORTH	1	20	0.5	0.4	20	1	SCOREBOARD CENTER COURT	6
7	BLEACHERS SOUTH - GYM 808	1	15	0.8	0.8	15	1	BLEACHERS MIDDLE - GYM 808	8
9	BLEACHERS NORTH - GYM 808	1	15	0.8	0.8	20	1	GYM SPEAKER SYSTEM AMP - ELECT	10
11	BASKETBALL GOAL WINCH SOUTH	2	15	1.6	1.6	15	2	BASKETBALL GOAL WINCH SOUTHWEST	12
13									14
15	BASKETBALL GOAL WINCH SOUTHEAST	2	15	1.6	1.6	15	2	BASKETBALL GOAL WINCH NORTHWEST	16
17									18
19	BASKETBALL GOAL WINCH NORTHEAST	2	15	1.6	1.6	15	2	BASKETBALL GOAL WINCH NORTH	20
21									22
23	WATER COOLER - GYM 808 (G)	1	20	0.4	·	20	1	SPARE	24
25	SPARE	1	20	·	·	20	1	SPACE	26
27	SPARE	1	20	·	·	20	1	SPACE	28
29	SPARE	1	20	·	·	20	1	SPARE	30

CONNECTED LOAD 17.0 KVA

(G) PROVIDE GROUND-FAULT CIRCUIT INTERRUPTER TYPE BREAKER.

PANEL 2P2 SCHEDULE

NEMA 1, SURFACE MOUNT
225A M.L.O. 208Y/120V 3ø 4W — 10,000 AIC RATING

CKT NO.	LOAD DESCRIPTION	BREAKER POLE	BREAKER AMP	KVA	KVA	BREAKER AMP	BREAKER POLE	LOAD DESCRIPTION	CKT NO.
1	RECEPT - SPRINKLER, CLOSET, VESTIBULE, NORTH EXTERIOR	1	20	0.8	0.4	20	1	RECEPT - LAUNDRY 812	2
3	ICE MACHINE - LAUNDRY 812 (G)	1	20	1.2	1.2	20	1	WASHING MACHINE - LAUNDRY (G)	4
5	DRYER - LAUNDRY 812 (G)	2	30	4.9	0.9	20	1	RECEPT - OFFICE 811	6
7					1.5	20	1	RECEPT - GENTS/LADIES DRESSING	8
9	RECEPT - TLT SHWR 814A & 815A EAST EXTERIOR	1	20	0.6	0.9	20	1	RECEPT - OFFICE 818	10
11	RECEPT - TRAINING 817	1	20	0.8	1.2	20	1	ICE MACHINE - TRAINING 817 (G)	12
13	WHIRLPOOL - TRAINING 817	1	20	0.8	0.2	20	1	DDC PANEL - MECH 824	14
15	RECEPT - MECH 824, GEN STO 822, JAN 820, EAST EXTERIOR	1	20	0.9	1.5	20	1	RECEPT - HALL 823, STO 826, EAST EXTER, LADIES/GENTS DRESSING	16
17	RECEPT - TOILET & SHOWER 827A	1	20	0.4	0.4	20	1	RECEPT - TOILET & SHOWER 830A	18
19	RECEPT - OFFICE 828	1	20	0.8	0.8	20	1	RECEPT - OFFICE 829	20
21	RECEPT - SHEET MUSIC, VEST, EAST EXTERIOR, ENSEMBLE REH HALL	1	20	0.8	0.6	20	1	RECEPT - LADIES, JAN, GENTS	22
23	WATER COOLER - ENSEM HALL (G)	1	20	0.4	1.3	20	1	RECEPT - ENSEMBLE REHEARSAL	24
25	RECEPT - ENSEMBLE REHEARSAL	1	20	1.1	0.8	20	1	RECEPT - BAND DIRECTOR 845	26
27	RECEPT - TLT & SHWR 845A, MECH, SOUTH EXTERIOR	1	20	0.6	0.9	20	1	RECEPT - ASSISTANT DIRECTORS	28
29	DDC PANEL - MECH 855	1	20	0.2	0.9	20	1	RECEPT - PRACTICE FIELD 821	30
31	WATER COOLER - PRAC FIELD (G)	1	20	0.4	0.8	20	1	FIRE ALARM CP - DATA 831 (L)	32
33	INTERCOM SYSTEM - DATA 831	1	20	0.6	0.8	20	1	ERCES - DATA 831 (L)	34
35	CLOCK SYSTEM - DATA 831	1	20	0.6	0.6	20	1	COMM RACK - DATA 831	36
37	DUCTLESS SPLIT SYSTEM - DATA 831	2	20	1.8	5.0	30	2	COMM RACK - DATA 831	38
39									40
41	SMOKE DAMPERS - LAUND. 812 (L)	1	20	0.2	·	20	1	SPARE	42
43	SPARE	1	20	·	·	20	1	SPARE	44
45	SPARE	1	20	·	·	20	1	SPARE	46
47	SPARE	1	20	·	·	20	1	SPARE	48
49	SPARE	1	20	·	·	20	1	SPARE	50
51	SPARE	1	20	·	·	20	1	SPARE	52
53	SPARE	1	20	·	·	20	1	SPARE	54
55	SPARE	1	20	·	·	20	1	SPARE	56
57	SPARE	1	20	·	·	20	1	SPARE	58
59	SPARE	1	20	·	·	20	1	SPARE	60
61	SPACE	1	20	·	·	20	1	SPACE	62
63	SPACE	1	20	·	·	20	1	SPACE	64
65	SPACE	1	20	·	·	20	1	SPACE	66
67	SPACE	1	20	·	·	20	1	SPACE	68
69	SPACE	1	20	·	·	20	1	SPACE	70
71	SPACE	1	20	·	·	20	1	SPACE	72

CONNECTED LOAD 38.6 KVA

(G) PROVIDE GROUND-FAULT CIRCUIT INTERRUPTER TYPE BREAKER.
(L) PROVIDE LOCKABLE MECHANISM FOR BREAKER.

ADDITIONS TO ROBERTSDALE HIGH SCHOOL

ROBERTSDALE, ALABAMA

FOR THE

BALDWIN COUNTY BOARD OF EDUCATION

McKEE and ASSOCIATES, INC.
ARCHITECTS
631 SOUTH HULL STREET, MONTGOMERY, ALABAMA 36104 (334) 834-9933

SHEET TITLE : ELECTRICAL PANEL SCHEDULES

MCKEE JOB # : 23-195

DRAWN BY : RDH

DATE: 10.11.2023

REVISED DATE:

REVISED DATE:

REVISED DATE:

H.M. YONGE & ASSOCIATES, INC.
CONSULTING ENGINEERS // EST. 1988
51 EAST GREGORY STREET
PENSACOLA, FLORIDA 32502
PHONE: (850)434-2661
253 ST. ANTHONY STREET
MOBILE, ALABAMA 36603
PHONE: (251)690-7446

SHEET NO. : E5.1

- J:\Jobs_Active\23108 Robertsdale High School Band Room\23108E51 ELECTRICAL PANEL SCHEDULES.dwg
- Thursday, October 5, 2023 10:24:24 AM

RDH> J:\Jobs_Active\23108 Robertsdale High School Band Room\23108E51 ELECTRICAL PANEL SCHEDULES.dwg 09/08/23 09:39

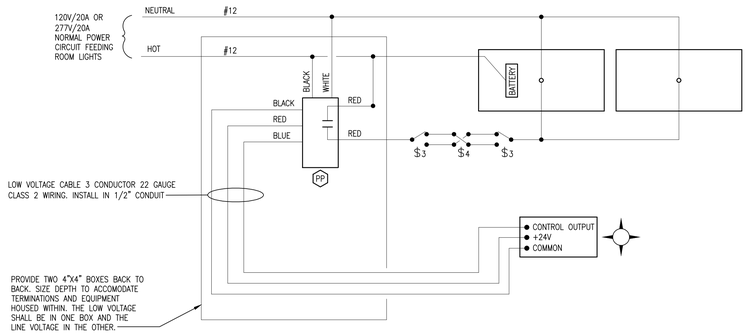

TYPICAL 3-WAY OCCUPANCY SENSOR WIRING DIAGRAM

SCALE: NONE

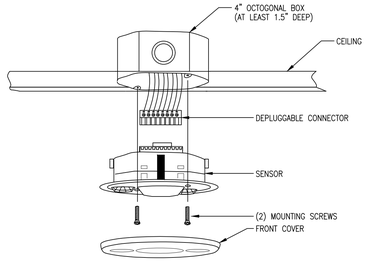

DUAL TECHNOLOGY MOUNTING DETAIL - CEILING MOUNT

SCALE: NONE

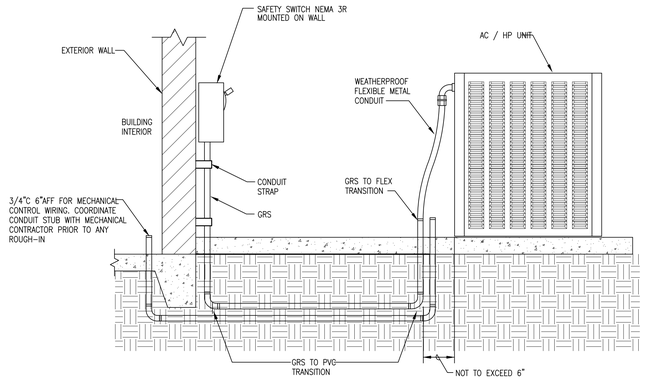

TYPICAL EXTERIOR AC / HP ELECTRICAL CONNECTION DETAIL

SCALE: NONE

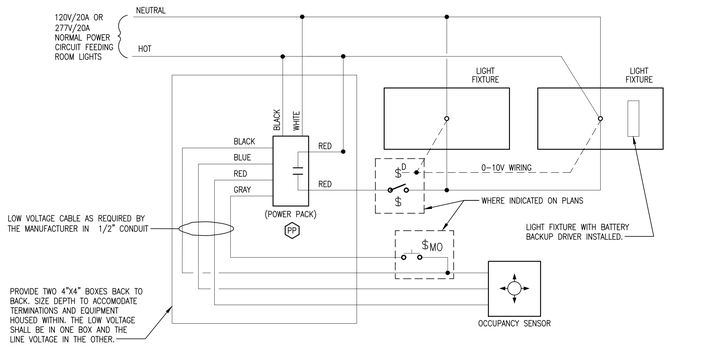

NOTE: THIS DIAGRAM IS TYPICAL AND IS A CONNECTION DIAGRAM ONLY. THE EXACT NUMBER OF DEVICES WILL BE AS SHOWN ON THE FLOOR PLAN.

OCCUPANCY SENSOR WIRING DIAGRAM

SCALE: NONE

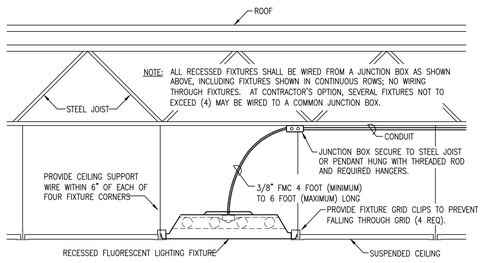

TYPICAL RECESSED FIXTURE INSTALLATION DETAIL

SCALE: NONE

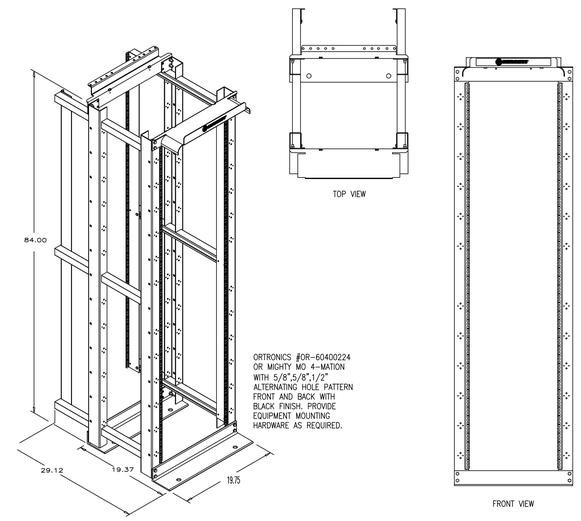

FULL HEIGHT RACK DETAIL

SCALE: NONE

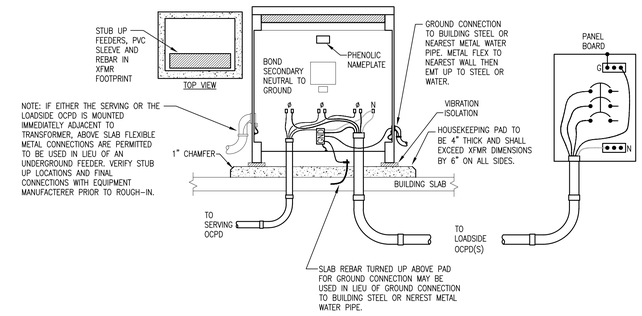

FLOOR MOUNTED TRANSFORMER DETAIL

SCALE: NONE

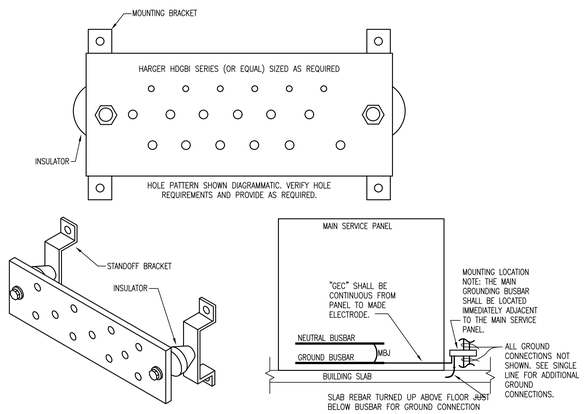

MAIN GROUNDING BUSBAR DETAIL

SCALE: NONE

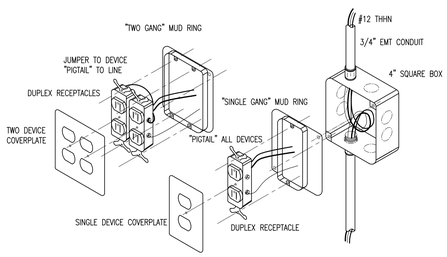

DEVICE WIRING DETAIL

SCALE: NONE

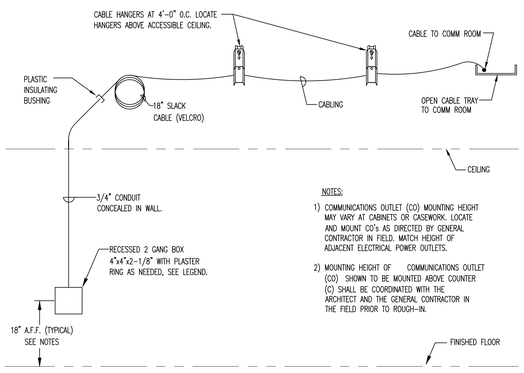

TYPICAL COMMUNICATIONS OUTLET ROUGH-IN MOUNTING DETAIL

SCALE: NONE

ADDITIONS
TO
ROBERTSDALE HIGH SCHOOL
ROBERTSDALE, ALABAMA
FOR THE
BALDWIN COUNTY BOARD OF EDUCATION

McKEE and ASSOCIATES
ARCHITECTS, INC.
631 SOUTH HULL STREET . MONTGOMERY . ALABAMA 36104 (334) 834-9933

SHEET TITLE : ELECTRICAL DETAILS

MCKEE JOB # : 23-195

DRAWN BY : RDH

DATE: 10.11.2023

REVISED DATE:

REVISED DATE:

REVISED DATE:

H.M. YONGE & ASSOCIATES, INC.
CONSULTING ENGINEERS // EST. 1988
51 EAST GREGORY STREET
PENSACOLA, FLORIDA 32502
PHONE: (850)434-2661
253 ST. ANTHONY STREET
MOBILE, ALABAMA 36603
PHONE: (251)690-7446

SHEET NO. : E6.1

RDH> J:\Jobs_Active\23108 Robertsdale High School Band Room\23108E61 ELECTRICAL DETAILS.dwg 09/07/23 10:00

- J:\Jobs_Active\23108 Robertsdale High School Band Room\23108E61 ELECTRICAL DETAILS.dwg
- Thursday, October 5, 2023 10:24:24 AM