CLASSROOM ADDITION FOR
MARGARET ELEMENTARY SCHOOL
680 COUNTY ROAD 12, ODENVILLE, ALABAMA 35120
ST. CLAIR COUNTY BOARD OF EDUCATION

ST. CLAIR COUNTY BOARD OF EDUCATION	
MR. SCOTT SUTTLE	BOARD PRESIDENT
MRS. NICKIE STEVENS VAN PELT	BOARD VICE PRESIDENT
MRS. CATHY FINE	BOARD MEMBER
MR. BOGIE LOVELL	BOARD MEMBER
MR. BILL MORRIS	BOARD MEMBER
MS. ALLISON GRAY	BOARD MEMBER
MR. RANDY THOMPSON	BOARD MEMBER
DR. JUSTIN BURNS	SUPERINTENDENT

OWNER ST. CLAIR COUNTY BOARD OF EDUCATION
410 ROY DRIVE
ASHVILLE, ALABAMA 35953

ARCHITECT LATHAN ASSOCIATES ARCHITECTS, P.C.
300 CHASE PARK SOUTH
SUITE 200
HOOVER, ALABAMA 35244
EMAIL: RFI@LATHANASSOCIATES.COM

CIVIL LBYD, INC.
880 MONTCLAIR ROAD #600
BIRMINGHAM, ALABAMA 35213

MECHANICAL/ PLUMBING PINNACLE ENGINEERING, INC.
2111 PARKWAY OFFICE CIRCLE
SUITE 125
BIRMINGHAM, ALABAMA 35244

STRUCTURAL STRUCTURAL DESIGN GROUP, INC.
300 CHASE PARK SOUTH
SUITE 125
HOOVER, ALABAMA 35244

ELECTRICAL STEWART ENGINEERING, INC.
P.O. BOX 2233
ANNISTON, ALABAMA 36202

PSCA # 051C / 9608

DRAWING INDEX (SET - 46 TOTAL SHEETS)

GENERAL (3 SHEETS)

T1 - TITLE AND INDEX
LS1.1 - LIFE SAFETY PLANS
LS1.2 - TORNADO SHELTER PLAN

CIVIL DRAWINGS (7 SHEETS)

C0.1 - CIVIL NOTES
C1.0 - DEMOLITION PLAN
C2.0 - SITE LAYOUT PLAN
C3.0 - GRADING AND DRAINAGE PLAN
C4.0 - EROSION CONTROL PLAN
C5.0 - UTILITY PLAN
C6.0 - CIVIL DETAILS

ARCHITECTURAL DRAWINGS (14 SHEETS)

A1.1 - ARCHITECTURAL SITE PLAN
A2.1 - FLOOR PLAN, DEMOLITION PLAN AND DOOR SCHEDULE
A2.2 - ROOF PLANS
A2.3 - ROOF DETAILS
A2.4 - WINDOW SCHEDULE AND DETAILS
A3.1 - BUILDING ELEVATIONS
A3.2 - BUILDING SECTIONS
A3.3.1 - WALL SECTIONS
A3.3.2 - WALL SECTIONS
A3.3.3 - WALL SECTIONS
A3.3.4 - WALL SECTIONS
A5.1 - ENLARGED TOILET PLANS, LEGEND, INTERIOR ELEVATIONS AND DETAILS
A7.1 - REFLECTED CEILING PLAN, FINISH FLOOR PLAN, LEGENDS, DETAILS AND NOTES
A8.1 - ROOM SIGNAGE FLOOR PLAN, LEGENDS, AND DETAILS

STRUCTURAL DRAWINGS (10 SHEETS)

S1.0 - GENERAL NOTES
S1.1 - GENERAL NOTES CONTINUED
S1.2 - TYPICAL DETAILS
S1.3 - TYPICAL DETAILS
S1.4 - TYPICAL DETAILS
S2.1 - FOUNDATION PLAN
S2.2 - ROOF FRAMING PLAN
S3.1 - SECTIONS AND DETAILS
S3.2 - SECTIONS AND DETAILS
S3.3 - SECTIONS AND DETAILS

PLUMBING DRAWINGS (2 SHEETS)

P0.1 - PLUMBING LEGEND, SCHEDULES, ABBREVIATIONS, AND DETAILS
P1.1 - FLOOR PLANS PLUMBING

MECHANICAL DRAWINGS (5 SHEETS)

M0.1 - MECHANICAL LEGEND, ABBREVIATIONS AND SCHEDULES
M1.1 - FLOOR PLAN MECHANICAL
M2.1 - MECHANICAL DETAILS
M2.2 - MECHANICAL DETAILS
M3.1 - VENTILATION CALCULATIONS

ELECTRICAL DRAWINGS (5 SHEETS)

E1.1 - SCHEDULES, SYMBOLS, AND NOTES
E2.1 - MASTER PLAN AND SINGLE LINE DIAGRAM
E3.1 - FLOOR PLAN - LIGHTING
E4.1 - FLOOR PLAN - POWER
E5.1 - FLOOR PLAN - AUXILIARIES

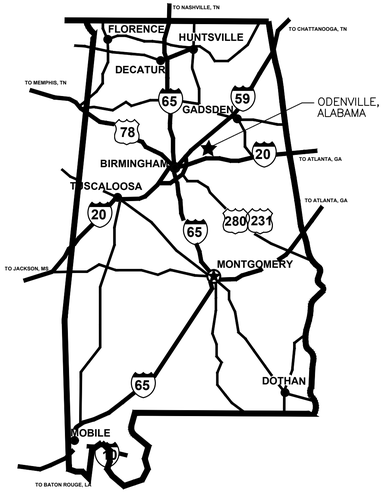

AREA MAP
STATE OF ALABAMA

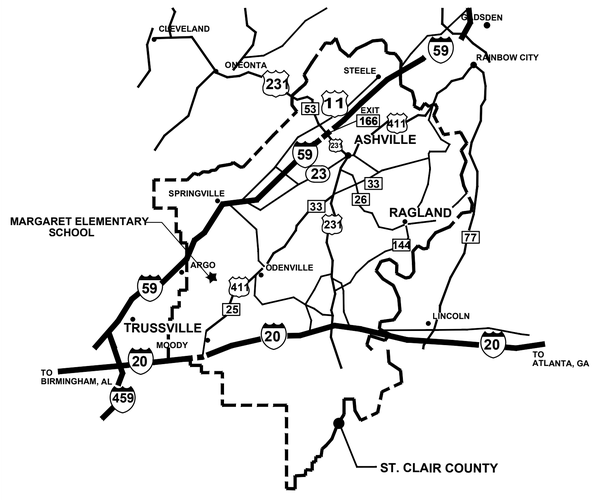

VICINITY MAP
ST. CLAIR COUNTY, ALABAMA

LATHAN ARCHITECTS

CLASSROOM ADDITION FOR
MARGARET ELEMENTARY SCHOOL
680 COUNTY ROAD 12, ODENVILLE, ALABAMA 35120
ST. CLAIR COUNTY BOARD OF EDUCATION

STATE OF ALABAMA
No. 3365
RICK N. LATHAN
REGISTERED ARCHITECT

SHEET TITLE:
TITLE AND INDEX

PROJ. MGR.: S. WILSON
DRAWN: –
Rasco
DATE: JANUARY 11, 2024
REVISIONS

JOB NO. 23-41
SHEET NO:
T1
1 OF 3

0 1" 2"

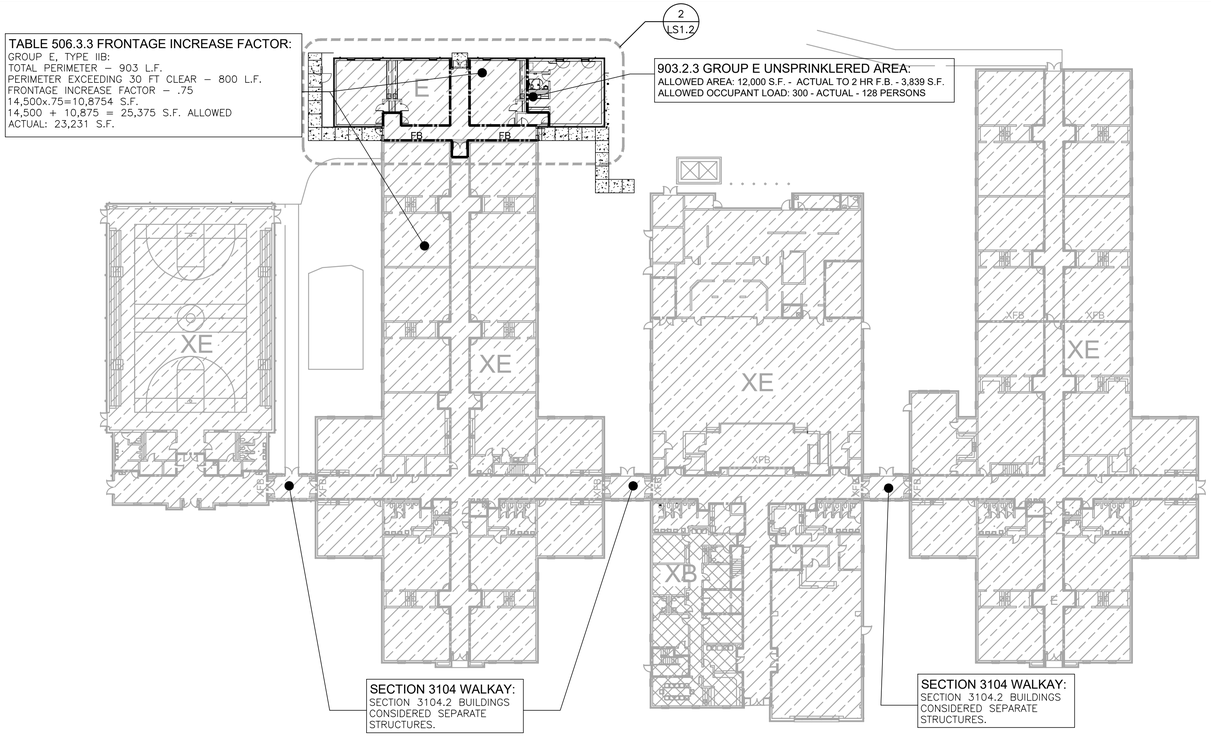

1 OVERALL LIFE SAFETY PLAN
SCALE: 1/32" = 1'-0"

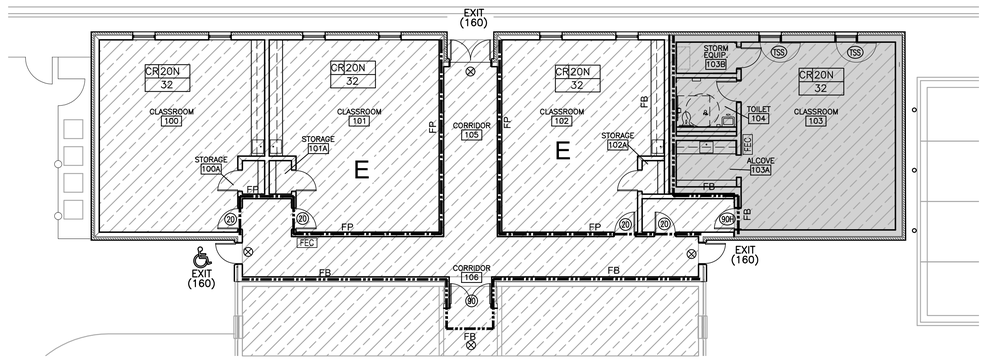

2 PARTIAL LIFE SAFETY PLAN
SCALE: 3/32" = 1'-0"

2021 INTERNATIONAL BUILDING CODE RESEARCH

EXISTING OCCUPANCY CLASSIFICATION:	GROUP E		
NEW ADDITION OCCUPANCY CLASSIFICATION:	GROUP E		
EXISTING BUILDING TYPE OF CONSTRUCTION :	TYPE IIIB, UNSPRINKLERED		
NEW ADDITION TYPE OF CONSTRUCTION :	TYPE IIB, UNSPRINKLERED		
EXISTING BUILDING AREA	72,897 S.F.		
NEW ADDITION AREA	3,839 S.F.		
TABLE 503 ALLOWABLE HEIGHT & AREA:	ALLOWABLE HEIGHT:	2 STORIES	
	ALLOWABLE S.F.:	14,500 S.F.	
TABLE 601 AND 705.2 FIRE-RESISTANCE RATING REQUIREMENTS FOR BUILDING ELEMENTS:	CONSTRUCTION TYPE:	IIB	
	STRUCTURAL FRAME:	0	
	BEARING WALLS:	EXTERIOR 0	
	T. 602 EXTERIOR:	< 5'	1hr
		≥ 5'< 10'	1hr
		≥ 10'< 30'	0
		≥ 30'	0
	INTERIOR:	0	
	NONBEARING WALLS:		
	T. 602 EXTERIOR:	< 5'	1hr
		≥ 5'< 10'	1hr
		≥ 10'< 30'	0
		≥ 30'	0
	INTERIOR:	0	
	FLOOR CONSTRUCTION:	0	
	ROOF CONSTRUCTION:	0	
TABLE 1020.2 CORRIDOR FIRE-RESISTANCE RATING PARTITIONS AND OPENING PROTECTIVES	GROUP E UNSPRINKLERED	1	

CHAPTER 29 - PLUMBING SYSTEMS

EXISTING SCHOOL PLUS ADDITION

OCCUPANCY		WATERCLOSETS				LAVATORIES				DRINKING FOUNTAINS		SERVICE SINKS
USE	LOAD	RATIO	MALE	RATIO	FEMALE	RATIO	MALE	RATIO	FEMALE	RATIO	ALL	ALL
A2	301.33	1/75	2.01	1/75	2.01	1/200	0.75	1/200	0.75	1/500	0.60	
A3	481.87	1/125	1.93	1/65	3.7	1/200	1.21	1/200	1.21	1/500	0.96	
B	27.39	1/25 FIRST 50 1/50 REMAINDER EXCEEDING 50.	.55	1/25 FIRST 50 1/50 REMAINDER EXCEEDING 50.	.55	1/40 FIRST 80 1/80 EXCEED 80.	.34	1/40 FIRST 80 1/80 EXCEED 80.	.34	1/100	.27	1
E	1460.23	1/50	14.60	1/50	14.60	1/50	14.60	1/50	14.60	1/100	14.60	
REQUIRED TOTALS			19.09		20.86		16.9		16.9		16.43	1
PROVIDED TOTALS			21		21		21		21		18	1

OCCUPANCY LEGEND

B — GROUP B
XB–EXIST. GROUP B

E — GROUP E
XB–EXIST. GROUP E

LIFE SAFETY NOTES

FEC — FIRE EXTINGUISHER AND CABINET (PROVIDE FIRE RATED CABINETS IN RATED WALLS.)	
FE — FIRE EXTINGUISHER	ACCESSIBLE
EXIT SIGN DIRECTION	EXIT (320) — EXIT CAPACITY
EXTEND AND KEY ALL RATED WALLS TO SHAFT WALL SYSTEM, AND/OR BOTTOM OF ROOF ASSEMBLY	
STENCIL LABEL ALL RATED WALLS & DRAFT STOPS ABOVE CEILING EACH SIDE @ 20'-0" O.C. MAX.	
ALL RATED DOORS AND FRAMES TO BE LABELED WITH EMBOSSED LABELS INDICATING RATING IN MINUTES	
HE - HORIZONTAL EXIT	XHE - EXISTING HORIZONTAL EXIT
FB - FIRE BARRIER	XFB - EXISTING FIRE BARRIER
FP - FIRE PARTITION	XFP - EXISTING FIRE PARTITION
FW - FIRE WALL	XFW - EXISTING FIRE WALL

TRAVEL DISTANCE — START, PATH, DIRECTION

FUNCTION — S 300G — LOAD FACTOR: N = NET, G = GROSS
OCCUPANT LOAD — 35

DOOR/WINDOW RATING LEGEND

20 — 20 MINUTE DOOR AND FRAME	60 — 60 MINUTE DOOR AND FRAME
45 — 45 MINUTE DOOR AND FRAME	90 — 90 MINUTE DOOR AND FRAME
TSS — TORNADO IMPACT RATED SHUTTER	90H — 90 MINUTE RATING AND TORNADO IMPACT RATED

WALL TYPE LEGEND

1 HR WALL
2 HR WALL
DRAFT WALL

LATHAN ARCHITECTS

CLASSROOM ADDITION FOR
MARGARET ELEMENTARY SCHOOL
680 COUNTY ROAD 12, ODENVILLE, ALABAMA 35120
ST. CLAIR COUNTY BOARD OF EDUCATION

STATE OF ALABAMA
No. 3365
RICK N. LATHAN
REGISTERED ARCHITECT

SHEET TITLE:
LIFE SAFETY PLANS

PROJ. MGR.: S. WILSON
DRAWN: HR
Rasco
DATE: JANUARY 11, 2024
REVISIONS

JOB NO. 23-41
SHEET NO:
LS1.1
2 OF 3

0 1" 2"

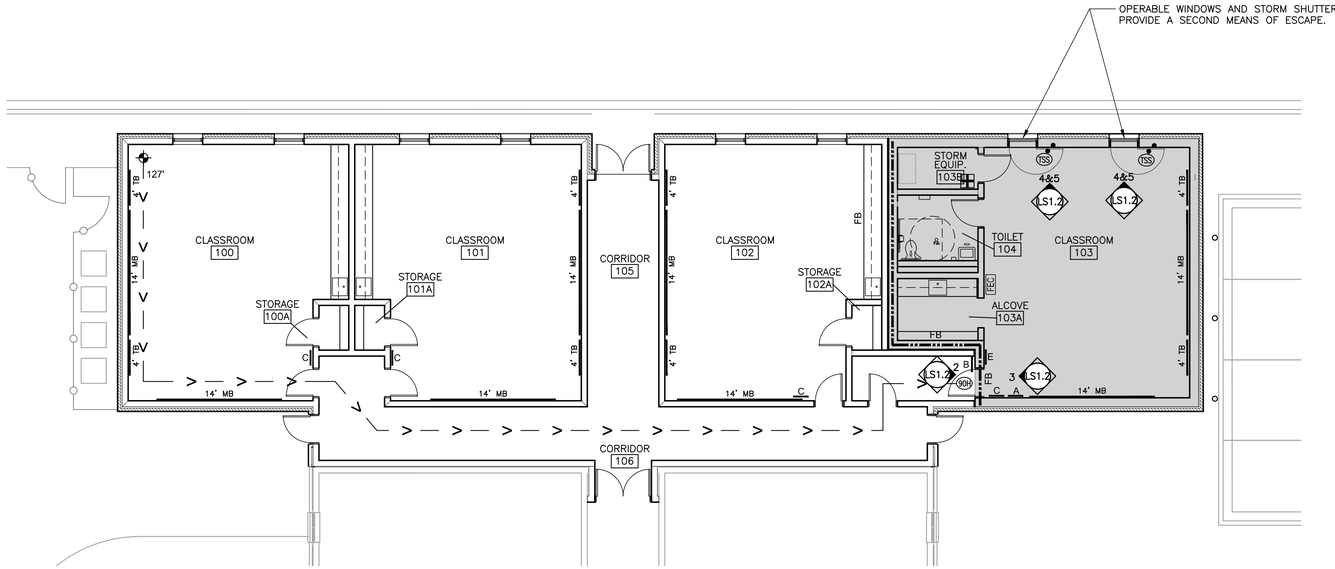

2 TORNADO SHELTER PLAN

SCALE: 1/8" = 1'-0"

EXISTNG TORNADO STORM SHELTER CALCULATION
2020 ICC 500 (DCM Memo Updated Guidance on Tornado Storm Shelter Requirements for Public K-12 School February 18, 2021 and Department of Finance DCM Memo Updated Guidance on Mandatory Tornado Storm Shelters Required by IBC October 21, 2020)

GROSS AREA OF CLASSROOM/INSTRUCTIONAL SPACE:	2,659.43 S.F.
REQUIRED OCCUPANT CAPACITY (STUDENT AND FACULTY) :	2,660 / 30 = 88.67 (89) PERSONS + 10% 8.9 (9) = 98
REQUIRED USEABLE SHELTER FLOOR AREA:	97(5) = 485 S.F + 10 S.F. (1- WHEELCHAIR) = 495 S.F.
PROVIDED USEABLE SHELTER FLOOR AREA:	TOILET 104 CLEAR SPACE (100% USEABLE) = 46.24 S.F. (/5=9 OCC) CLASSROOMS 103: 644.53 S.F. - 35% = 418.94 S.F./5=83 OCC) ALCOVE 103A CLEAR SPACE (100% USEABLE) = 41.9 (/5=8 OCC) TOTAL USEABLE PROVIDED = 507.8 S.F.
ACTUAL CAPACITY OF STORM SHELTER:	100 : 99(5) + 1 WHEELCHAIRS (10) = 505 S.F.

SHELTER LEGEND

LOCATION	DOOR TYPE
	90H 90 MINUTE TORNADO IMPACT RATED DOOR AND FRAME. TSS TORNADO IMPACT RATED SHUTTER
2 HR FIRE BARRIER	
TRAVEL DISTANCE	START, PATH, DIRECTION

FIRE RATED WALLS:

FIRE RATED WALLS INDICATED ON THIS SHEET ARE TORNADO STORM SHELTER WALLS ONLY. SEE LIFE SAFETY PLANS ON SHEET LS1.1 FOR ALL OTHER REQUIRED FIRE RATED WALLS.

SHELTER SIGN LEGEND

SYMBOL	DESCRIPTION
A	SECTION 508 STORM SHELTER PLAQUE WALL MOUNTED PER ADA 703 (9/LS1.2)
B	SECTION 508 STORM SHELTER SIGN WALL MOUNTED PER ADA 703 (8/LS1.2)
C	SECTION 508 STORM SHELTER IDENTIFYING SIGN WALL MOUNTED PER ADA 703 (10/LS1.2)
D	SIGN "D" OPEN DURING SHELTER (12/LS1.2)
E	SIGN "E" LEAVING SHELTER SIGN (11/LS1.2)
F	SIGN "F" FAN SWITCH SIGN (13/LS1.2)
•	STORM INSTRUCTIONAL SIGN MOUNTED PER ADA 703 (6/LS1.2 AND 7/LS1.2)
	FIRST AID KIT

NOTE: FINAL PLACEMENT OF ALL SIGNS SHALL BE COORDINATED WITH ARCHITECT AND OWNER PRIOR TO INSTALLATION.

NOTE:
1. ALL PENETRATIONS 2" OR GREATER MUST BE PROTECTED WITH A STORM SHELTER BAFFLE OR STORM SHELTER LOUVER SYSTEM. SEE ENGINEER FOR CONDITIONS AND DETAILS.
2. PROVIDE A COLD JOINT AT ALL AREAS WHERE STORM SHELTER SLAB MEETS THE NORMAL SLAB CONDITION, SEE STRUCTURAL.
3. ALL SIGNS SHALL BE IN ACCORDANCE WITH 2010 ADA STANDARD. VERIFY EXACT PLACEMENT WITH ARCHITECT PRIOR TO INSTALLATION.
4.ALL TORNADO REISTANT DOOR, FRAMES, AND WINDOWS SHALL RECIEVE BOTH FEMA 361/ICC-500 2020 LABEL AND THE 90 MINUTE FIRE LABEL.

TABLE 702.3 SANITATION FACILITIES

REQUIRED SANITATION FACILITIES COMMUNITY TORNADO STORM SHELTER > 50: CAPACITY OF SHELTER IS 100 PERSONS	
REQUIRED TOILET FACILITIES	1
PROVIDED TOILET FACILITIES	1
REQUIRED LAVATORIES	1
PROVIDED LAVATORIES	1
PROVIDED WATER FOUNTAINS: SINK BUBBLER	1

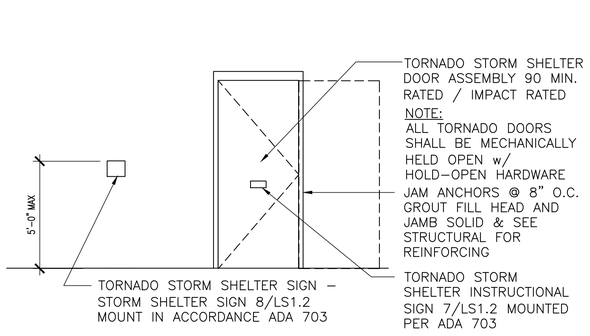

2 TORNADO DOOR ELEVATION

SCALE: 3/8" = 1'-0" INDICATED IN CLOSED POSITION OUTSIDE SHELTER

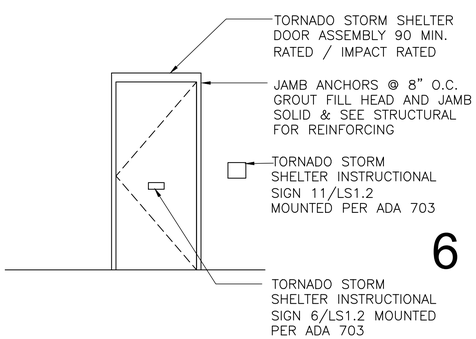

3 TORNADO DOOR ELEVATION

SCALE: 3/8" = 1'-0" INDICATED IN CLOSED POSITION INSIDE SHELTER

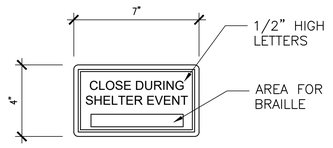

INSIDE STORM SHELTER SIDE OF DOOR IN CLOSED POSITION

6 TORNADO STORM SHELTER INSTRUCTIONAL SIGN

SCALE: 3" = 1'-0"

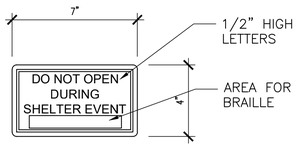

OUTSIDE STORM SHELTER SIDE OF DOOR IN CLOSED POSITION

7 TORNADO STORM SHELTER INSTRUCTIONAL SIGN

SCALE: 3" = 1'-0"

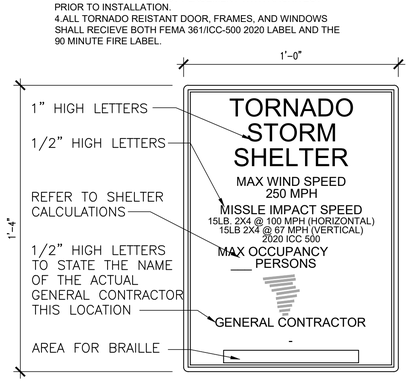

9 TORNADO STORM SHELTER PLAQUE- A

SCALE: 3" = 1'-0"

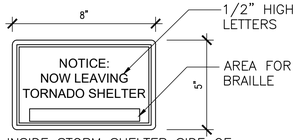

INSIDE STORM SHELTER SIDE OF DOOR IN CLOSED POSITION

11 TORNADO STORM SHELTER INSTRUCTIONAL SIGN -E

SCALE: 3" = 1'-0"

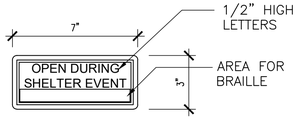

INSIDE STORM SHELTER SIDE OF DOOR IN CLOSED POSITION

12 TORNADO STORM SHELTER INSTRUCTIONAL SIGN -D

SCALE: 3" = 1'-0"

4 TORNADO DOOR ELEVATION

SCALE: 3/8" = 1'-0" INDICATED IN OPEN POSITION

5 TORNADO DOOR ELEVATION

SCALE: 3/8" = 1'-0" INDICATED IN CLOSED POSITION

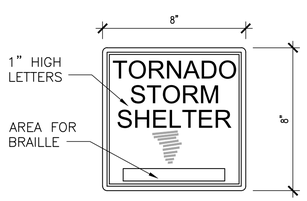

8 TORNADO STORM SHELTER SIGN - B

SCALE: 3" = 1'-0"

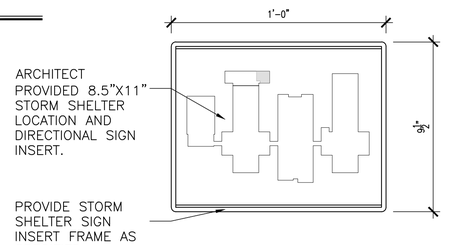

10 TORNADO STORM SHELTER LOCATION SIGN FRAME - C

SCALE: 3" = 1'-0"

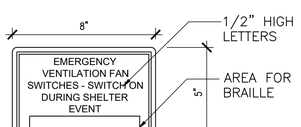

INSIDE STORM SHELTER SIDE OF DOOR IN CLOSED POSITION

13 TORNADO STORM SHELTER INSTRUCTIONAL SIGN -F

SCALE: 3" = 1'-0"

LATHAN ARCHITECTS

CLASSROOM ADDITION FOR
MARGARET ELEMENTARY SCHOOL
680 COUNTY ROAD 12, ODENVILLE, ALABAMA 35120
ST. CLAIR COUNTY BOARD OF EDUCATION

STATE OF ALABAMA
No. 3365
RICK N. LATHAN
REGISTERED ARCHITECT

SHEET TITLE:
TORNADO SHELTER PLAN

PROJ. MGR.: S. WILSON
DRAWN: HR
Rasco
DATE: JANUARY 11, 2024
REVISIONS

JOB NO. 23-41
SHEET NO:
LS1.2
3 OF 3

GENERAL NOTES:

1. LBYD, INC. SHALL NOT HAVE AUTHORITY OVER THE SITE OR BUILDING CONTRACTOR'S WORK OR RESPONSIBILITIES. LBYD IS NOT RESPONSIBLE FOR SITE SAFETY PROCEDURES OR METHODS OF CONSTRUCTION.
2. ALL EXISTING UTILITIES SHOWN ON THESE DRAWINGS ARE APPROXIMATE AND OTHER UTILITIES MAY EXIST. CONTRACTOR MUST HAVE EXISTING UTILITIES LOCATED BY UNDERGROUND LINE LOCATORS AS WELL AS FIELD VERIFIED BY ONSITE PERSONNEL PRIOR TO ORDERING MATERIALS OR BEGINNING CONSTRUCTION. ANY DISCREPANCIES SHALL BE REPORTED TO LBYD IMMEDIATELY.
3. EXISTING UTILITIES TO REMAIN MAY BE LOCATED WITHIN PROPOSED DEMOLITION AREAS. CONTRACTOR SHALL USE EXTREME CAUTION WHILE WORKING IN THESE AREAS TO ENSURE NO UTILITY SERVICE INTERRUPTIONS TO FACILITIES THAT REMAIN OR TO ADJACENT PROPERTIES.
4. ALL EXISTING IMPROVEMENTS WITHIN THE LIMITS OF CONSTRUCTION ARE TO BE REMOVED UNLESS SPECIFICALLY NOTED,"TO REMAIN".
5. THE CONTRACTOR SHALL TAKE ALL NECESSARY MEASURES TO PROTECT ADJACENT PROPERTIES AND IS RESPONSIBLE FOR ANY DAMAGE TO EXISTING IMPROVEMENTS ON OR OFF SITE DUE TO THE CONSTRUCTION OF THIS PROJECT. ANY DAMAGE WILL BE REPAIRED AT THE CONTRACTOR'S EXPENSE.
6. CONTRACTOR SHALL VERIFY SITE BOUNDARY AND EXISTING TOPOGRAPHY. NOTIFY LBYD OF ANY DISCREPANCIES PRIOR TO SUBMITTING PRICES OR ORDERING MATERIALS
7. IT IS THE CONTRACTOR'S RESPONSIBILITY TO PROTECT ALL BENCHMARKS AND PROPERTY CORNERS. ANY REPLACEMENT WILL BE AT THE CONTRACTOR'S EXPENSE.
8. IT IS THE RESPONSIBILITY OF THE CONTRACTOR TO OBTAIN ALL NECESSARY PERMITS REQUIRED TO CONSTRUCT THIS PROJECT AND PAY ALL PERMIT FEES. ALL PERMITS MUST BE IN-HAND PRIOR TO CONSTRUCTION.
9. BOUNDARY AND TOPOGRAPHIC INFORMATION PROVIDED BY THE OWNER AND PERFORMED BY ARRINGTON ENGINEERING & LAND SURVEYING, CO.
10. TOPOGRAPHIC INFORMATION WAS PERFORMED VIA GROUND RUN.

SITE DEMOLITION NOTES:

1. CONTRACTOR TO COORDINATE WITH OWNER PRIOR TO ANY DEMOLITION REGARDING ITEMS TO BE SALVAGED, RECYCLED, AND REUSED. CONTRACTOR SHALL REMOVE ITEMS TO BE SALVAGED WITH EXTREME CAUTION TO PREVENT DAMAGE. CONTRACTOR SHALL TURN ALL SALVAGED ITEMS OVER TO OWNER.
2. CONTRACTOR SHALL COORDINATE WITH OWNER AND THE UTILITY PROVIDER PRIOR TO THE DISCONNECTING OR REMOVAL OF ANY UTILITY SERVICE TO THE EXISTING BUILDINGS. ALL UTILITIES TO BE REMOVED ARE TO BE CAPPED OR PLUGGED OR TERMINATED ACCORDING TO THE UTILITY OWNERS REQUIREMENTS.
3. REFER TO SITE GRADING AND UTILITY PLANS FOR PROPOSED UTILITY AND DRAINAGE INSTALLATION AND REMOVAL.
4. REFER TO LAYOUT PLANS FOR ADDITIONAL INFORMATION RELATING TO PAVING, CURB, SIDEWALKS, HARDSCAPES, ETC. REMOVE EXISTING CURBS AS NEEDED TO INSTALL PROPOSED IMPROVEMENTS.
5. CONTRACTOR SHALL COORDINATE WITH OWNER AND THE UTILITY PROVIDER PRIOR TO THE DISCONNECTING OF ANY UTILITY SERVICE TO THE EXISTING BUILDINGS.
6. CONTRACTOR SHALL BE RESPONSIBLE FOR THE REMOVAL, RELOCATION OR PROTECTION OF ALL ABOVE AND BELOW GROUND EXISTING IMPROVEMENTS THAT ARE IN CONFLICT WITH THE PROPOSED IMPROVEMENTS UNLESS NOTED.
7. ALL DEMOLITION AND CONSTRUCTION DEBRIS SHALL BE TRANSPORTED AND DISPOSED OF AT LEAST WEEKLY IN A LEGAL AND APPROVED MANNER.
8. ALL EXISTING PAVING, CURBS, HARDSCAPE, ETC. SHALL BE SAW CUT AT THE LIMITS OF REMOVAL IN ORDER TO PROVIDE A CLEAN EDGE. EXISTING PAVING AT EDGE SHALL BE MILLED BACK A MINIMUM OF 1.5' TO ENSURE SMOOTH TRANSITION.

SITE LAYOUT NOTES:

1. ALL HANDICAP RAMPS, SIGNS, SYMBOLS, AND PAINTED ISLANDS AND ACCESS ROUTES MUST CONFORM TO THE LATEST ADA REQUIREMENTS.
2. THE MAXIMUM SLOPE IN HANDICAP PARKING AREAS SHALL NOT EXCEED 2.0% GRADE IN ANY DIRECTION. SLOPE IN THE DIRECTION OF TRAVEL IN ALL HANDICAP ACCESS ROUTES SHALL NOT EXCEED 5.0% GRADE AND 2.0% CROSS SLOPE.
3. ALL DIMENSIONS AND COORDINATES SHOWN ARE TO THE OUTSIDE FACE OF BUILDING TO THE BACK OF CURB, OR TO THE EDGE OF SURFACING UNLESS OTHERWISE NOTED. REFER TO ARCHITECTURAL PLANS FOR SPECIFIC BUILDING INFORMATION.
4. ALL STRIPING TO BE PER THE LATEST EDITION OF THE MUTCD UNLESS NOTED OTHERWISE.
5. THE CONTRACTOR SHALL BE RESPONSIBLE FOR PREPARING A SITE CONSTRUCTION TRAFFIC CONTROL PLAN AND OBTAINING ANY REQUIRED APPROVALS FROM THE LOCAL JURISDICTIONAL AUTHORITY. THE SITE CONSTRUCTION TRAFFIC CONTROL PLAN SHALL TAKE INTO ACCOUNT THE ENTERING AND EXITING OF CONSTRUCTION TRAFFIC ONTO THE ROADWAY AND THE IMPACT TO THE FLOW OF TRAFFIC. THIS PLAN SHALL BE IN ACCORDANCE WITH THE LATEST EDITION OF THE MUTCD. THIS SITE CONSTRUCTION TRAFFIC CONTROL PLAN SHALL BE IN ADDITION TO ANY TRAFFIC CONTROL PLAN PROVIDED IN THE PLAN SET FOR ROADWAY IMPROVEMENTS.
6. CONTRACTOR IS RESPONSIBLE FOR ADJUSTING ELEVATIONS OF ALL AT-GRADE STRUCTURES AND UTILITIES TO REMAIN (VALVE BOXES, MANHOLES, INLETS, VAULTS, ETC) TO MATCH PROPOSED FINISHED GRADES.

GRADING NOTES:

1. THE OWNER SHALL BE RESPONSIBLE FOR PROVIDING COMPACTION TESTING.
2. ALL TOPSOIL SHALL BE STRIPPED WITHIN THE PROPOSED LIMITS OF GRADING AND SHALL BE STOCKPILED ON-SITE IN AN APPROVED LOCATION FOR LATER USE WITH ANY EXCESS TO BE DISPOSED OF OFF-SITE ONCE ALL LANDSCAPED AREAS HAVE BEEN BROUGHT TO FINISH GRADE UNLESS OTHERWISE NOTED ON THE PLANS.
3. SUBGRADE SHALL BE PROOF ROLLED WITH A HEAVILY LOADED DUMP TRUCK AND APPROVED BY THE GEOTECHNICAL ENGINEER PRIOR TO PLACING FILL. ANY AREAS SHOWING SIGNS OF PUMPING, RUTTING, OR ANY UNSUITABLE (ORGANIC, SOFT, WET, LOOSE) MATERIAL FOUND IN PLACE SHALL BE UNDERCUT AND REPLACED, OR MOISTURE CONDITIONED AND COMPACTED TO THE SPECIFIED DENSITY AND MOISTURE CONTENT LISTED BELOW.
4. ALL EXPOSED SUBGRADE SHALL BE SCARIFIED TO A MINIMUM DEPTH OF 12", MOISTURE CONDITIONED, AND RECOMPACTED, AS NEEDED TO ACHIEVE THE SPECIFIED DENSITY AND MOISTURE CONTENT LISTED BELOW, UNLESS OTHERWISE DETERMINED BY A GEOTECHNICAL ENGINEER.
5. CONTRACTOR SHALL BE RESPONSIBLE TO PROTECT PREPARED SUBGRADE AND RESTORE TO PROJECT SPECIFICATIONS IF DAMAGED OR COMPROMISED DUE TO INCLEMENT WEATHER AND/OR CONSTRUCTION TRAFFIC.
6. FILL MATERIAL SHALL HAVE THE FOLLOWING PROPERTIES: VIRTUALLY FREE OF ORGANICS, NO ROCK FRAGMENTS GREATER THAN 4" WITHIN 4' OF FINISH GRADE, LIQUID LIMIT NOT EXCEEDING 50, PLASTICITY INDEX NOT EXCEEDING 30, AND A MAXIMUM DRY DENSITY OF NO LESS THAN 100PCF AS DETERMINED BY ASTM D-698, STANDARD PROCTOR.
7. PLACE FILL MATERIAL IN 8" MAXIMUM LOOSE LIFTS AND COMPACT TO REQUIREMENTS LISTED BELOW.
8. COMPACTION TESTS SHALL BE TAKEN AT THE RECOMMENDATION OF THE ON-SITE GEOTECHNICAL ENGINEER, BUT AT A MINIMUM EVERY 2,500 SQUARE FEET OF AREA PER 8" LIFT.
9. FILL MATERIAL TO BE WITHIN ±2.0% OF OPTIMUM MOISTURE CONTENT AT THE TIME OF COMPACTION, UNLESS OTHERWISE DETERMINED BY A GEOTECHNICAL ENGINEER.
10. MINIMUM COMPACTION REQUIREMENTS ARE EXPRESSED BELOW AS A PERCENTAGE OF THE MATERIAL'S MAXIMUM DRY DENSITY AS DETERMINED BY ASTM D-698, STANDARD PROCTOR.

AREA	STRUCTURAL*	VEHICULAR PAVEMENT	SIDEWALKS	LANDSCAPE
% MAXIMUM DRY DENSITY	98%	98%	98%	95%

*STRUCTURAL AREAS INCLUDE ZONES OF INFLUENCE AROUND THE BUILDING, PAVEMENT AREAS, FILL SLOPES, ETC.

11. COMPACTION WITHIN LIMITED SPACES (I.E. MANHOLES, INLETS, UTILITY TRENCHES) SHOULD BE BACKFILLED AND COMPACTED SYSTEMATICALLY, AT THE DIRECTION OF THE ON-SITE GEOTECHNICAL ENGINEER. STONE BACKFILL SHALL BE INSTALLED IN 12" MAXIMUM LOOSE LIFTS AND COMPACTED WITH 6-8 PASSES OF A VIBRATORY COMPACTOR.
12. CLEARING LIMITS SHALL BE 5' OUTSIDE OF ALL PROPOSED GRADED AREAS OR NOT BEYOND THE PROPERTY LINES WHICHEVER IS LESS.
13. NO GRADING OFF-SITE OR IN ANY ROAD RIGHT-OF-WAY WITHOUT PROPER APPROVALS AND PRIOR NOTIFICATION.
14. COORDINATE THE SEQUENCING OF ALL GRADING OPERATIONS WITH THE EROSION CONTROL PLAN.
15. THE MAXIMUM SLOPE IN HANDICAP PARKING AREAS SHALL NOT EXCEED 2.0% GRADE IN ANY DIRECTION. SLOPE IN THE DIRECTION OF TRAVEL IN ALL HANDICAP ACCESS ROUTES SHALL NOT EXCEED 5.0% GRADE AND 2.0% CROSS SLOPE.
16. ALL GRADING ADJACENT TO EXISTING OR PROPOSED BUILDINGS SHALL BE SLOPED AWAY FROM THE STRUCTURES AT A MINIMUM OF 1.0% GRADE. THE CONTRACTOR SHALL ENSURE POSITIVE DRAINAGE AWAY FROM THE STRUCTURES. NOTIFY LBYD OF ANY DISCREPANCIES.
17. PROPOSED GRADES INDICATED ON THIS PLAN ARE TO FINISH GRADE. THE CONTRACTOR SHALL MAKE SUBGRADE ADJUSTMENTS FOR TOPSOIL, PAVING, BUILDING PAD, ETC.
18. ALL PROPOSED STORM INLETS (GRATES, CURB, YARD, AREA DRAINS) SHALL BE LOCATED AT THE LOWPOINTS. GRADING SHALL BE TO DIRECT RUNOFF TO THESE INLETS. NOTIFY LBYD OF ANY DISCREPANCIES.
19. STORM DRAINAGE SYSTEMS SHALL BE CONSTRUCTED FROM DOWNSTREAM TO UPSTREAM. VERIFY ALL PIPE SLOPES, INVERTS, AND POINTS OF CONNECTION PRIOR TO CONSTRUCTION. NOTIFY LBYD OF ANY DISCREPANCIES.
20. A GEOTECHNICAL REPORT HAS BEEN PREPARED BY GALLET & ASSOCIATES, INC. PROJECT NUMBER 08BHSTC0302G AND IS AVAILABLE FOR INFORMATION PURPOSES. THE CONTRACTOR SHALL REVIEW THIS REPORT, VISIT THE SITE AND COMPLETE ANY ADDITIONAL EXPLORATIONS THAT IT FEELS NECESSARY IN ORDER TO PROVIDE A SATISFACTORY BID.
21. DEWATERING SHALL BE SOLELY THE RESPONSIBILITY OF THE CONTRACTOR. PREVENT SURFACE WATER AND GROUND WATER FROM ENTERING EXCAVATIONS, FROM PONDING ON PREPARED SUBGRADES, AND FROM FLOODING PROJECT SITE AND SURROUNDING AREA. PROTECT SUBGRADES FROM SOFTENING, UNDERMINING, WASHOUT, AND DAMAGE BY RAIN OR WATER ACCUMULATION. REROUTE SURFACE WATER RUNOFF AWAY FROM EXCAVATED AREAS. DO NOT ALLOW WATER TO ACCUMULATE IN EXCAVATIONS. DO NOT USE EXCAVATED TRENCHES AS TEMPORARY DRAINAGE DITCHES. INSTALL A DEWATERING SYSTEM TO KEEP SUBGRADES DRY AND CONVEY GROUND WATER AWAY FROM EXCAVATIONS. MAINTAIN UNTIL DEWATERING IS NO LONGER REQUIRED. IF GROUNDWATER DEWATERING IS REQUIRED, CONTRACTOR IS TO OBTAIN ANY PERMITS AS MAY BE REQUIRED PRIOR TO DISCHARGE OF EFFLUENT FROM DEWATERING.
22. GRADING ADJACENT TO THE BUILDING SHALL BE COORDINATED WITH ARCHITECTURAL AND STRUCTURAL DRAWINGS FOR FOUNDATION WALLS, STEM WALLS, DRAINS, AND OTHER CONDITIONS. THE CONTRACTOR SHALL NOTIFY LBYD INC. OF ANY DISCREPANCIES.

EROSION CONTROL NOTES:

1. SITE EROSION CONTROL MEASURES SHALL BE IN ACCORDANCE WITH ALL FEDERAL, STATE, AND LOCAL LAWS, CODES, AND REGULATIONS.
2. THE CONTRACTOR SHALL BE RESPONSIBLE FOR OBTAINING ANY REQUIRED EROSION CONTROL PERMITS. THE OWNER SHALL BE RESPONSIBLE FOR ALL MONITORING, INSPECTIONS, ETC. TO ENSURE THAT THE SITE IS AT ALL TIMES IN ACCORDANCE WITH PERMIT RULES & REGULATIONS. DOCUMENTATION OF INSPECTIONS BY A Q.C.I. OR Q.C.P. SHALL BE MAINTAINED BY THE CONTRACTOR AND PROVIDED TO THE OWNER AT HIS/HER REQUEST. ANY AND ALL FEES, FINES, ETC., SHALL BE THE RESPONSIBILITY OF THE CONTRACTOR.
3. ALL EROSION CONTROL DEVICES SHALL BE PROPERLY MAINTAINED DURING THE CONSTRUCTION PROCESS AND UNTIL ALL DISTURBED AREAS HAVE BEEN PERMANENTLY STABILIZED. ALL EROSION CONTROL INSTALLATION AND MAINTENANCE SHALL BE SOLELY THE RESPONSIBILITY OF THE CONTRACTOR AND SHALL BE AT NO ADDITIONAL COST TO THE OWNER.
4. EROSION CONTROL DEVICES SHOWN ON THESE PLANS ARE A MINIMUM AND ARE DEPENDENT ON THE CONTRACTOR'S CONSTRUCTION PHASING OF THE PROJECT. ADDITIONAL DEVICES SHALL BE INSTALLED AS REQUIRED TO PREVENT SILTATION, EROSION AND OTHER DEGRADATION OR POLLUTION TO THE SITE OR ADJACENT PROPERTIES, STREAMS, DITCHES, AND PUBLIC ROADWAYS. ADDITIONAL MEASURES MAY INCLUDE, AS MINIMUM, TEMPORARY SEDIMENT BASINS, CONSTRUCTION EXITS PAD, VEHICLE WASH RACKS, SILT FENCING, STRAW AND RIP RAP CHECK DAMS, DIVERSION DITCHES, ETC. THESE ADDITIONAL MEASURES SHALL BE AT NO ADDITIONAL COST TO THE OWNER.
5. EROSION CONTROL DEVICES SHALL INCLUDE, BUT NOT LIMITED, TO THE FOLLOWING DEVICES: SILT FENCING, BRUSH BERMS, SEDIMENT BASINS, DETENTION PONDS, STRAW WATTLES , CHECK DAMS, FILTER BERMS, JUTE MATTING, VEGETATIVE FILTER STRIPS, TURF REINFORCEMENT MAT, DIVERSION BERMS, ETC.
6. THE CONTRACTOR SHALL BE RESPONSIBLE FOR MAINTAINING ALL EROSION CONTROL DEVICES IN GOOD OPERATING CONDITION DURING ALL LAND DISTURBING ACTIVITIES. THIS RESPONSIBILITY SHALL INCLUDE THE CLEANUP AND/OR REPAIRS TO THE DEVICES AT NO ADDITIONAL COST TO THE OWNER.
7. EROSION CONTROL DEVICES SHALL BE MONITORED AND MAINTAINED UNTIL THE SITE HAS BEEN PERMANENTLY STABILIZED AND AFTER EACH RAINFALL GREATER THAN 0.75 INCHES IN A 24 HOUR PERIOD, ANY WIND GUSTS GREATER THAN 25 MPH, AND ANY SUSTAINED WINDS GREATER THAN 20 MPH IN A 24 HOUR PERIOD.
8. AFTER ALL LAND DISTURBANCE ACTIVITIES HAVE CEASED AND AFTER ALL DISTURBED AREAS HAVE BEEN PERMANENTLY STABILIZED, THE EROSION CONTROL DEVICES SHALL BE REMOVED BY THE CONTRACTOR AND THE AREA CLEANED AND DRESSED.
9. DEWATERING OPERATIONS MAY NOT BE DISCHARGED IN A MANNER THAT CAUSES EROSION OF THE SITE OR POLLUTION TO ADJACENT PROPERTIES, STREAMS, DITCHES, OR PUBLIC ROADWAYS.
10. A GRAVELED ACCESS DRIVE OF SUFFICIENT SIZE SHALL BE AT EACH SITE ENTRANCE/EXIT TO PREVENT TRACKING OF DIRT AND SEDIMENT ONTO PUBLIC OR PRIVATE ROADWAYS. IF SEDIMENT REACHES THE ROADWAY, THEN IT MUST BE CLEANED AT THE END OF EACH WORKDAY.
11. ALL LAND DISTURBANCE ACTIVITIES SHALL BE CONDUCTED IN A LOGICAL SEQUENCE TO MINIMIZE THE EXPOSURE OF BARE AREAS AT ANY ONE TIME.
12. ALL DISTURBED AREAS LEFT INACTIVE FOR MORE THAN 13 DAYS SHALL BE SEEDED AND MULCHED IN ACCORDANCE WITH ALDOT SPECIFICATIONS SECTION 652 AND 656.
13. ALL PREVIOUSLY GRADED AREAS SHALL RECEIVE 4 INCHES OF TOPSOIL AND PERMANENT GRASSING UNLESS OTHERWISE INDICATED ON THE LANDSCAPE PLAN.
14. PRIOR TO SITE CLEARING, ALL PERIMETER SILT FENCING, BRUSH BERMS, ETC. AND GRAVELED ACCESS DRIVES SHALL BE INSTALLED.
15. ALL EXISTING STREAMS, DITCHES, ETC. SHALL BE PROTECTED FROM SEDIMENTS AND SILTS BY SILT FENCING, WATTLES, BRUSH BERMS, ETC.
16. WATTLES OR SILT FENCING SHALL BE INSTALLED AT ALL INLETS UPON THE COMPLETION OF EACH INLET.

UTILITY NOTES:

1. THE SITE CONTRACTOR IS RESPONSIBLE FOR COMPLETING ALL UTILITY SERVICES (WATER, SEWER, GAS, ELECTRICAL, TELEPHONE, CABLE TV) FROM THE POINT THE RESPECTIVE UTILITY COMPANY COMPLETES THEIR WORK TO THE POINT OF CONNECTION AT THE BUILDING.
2. REFER TO ARCHITECTURAL, MECHANICAL, PLUMBING, ELECTRICAL, ETC. PLANS FOR ALL PROPOSED UTILITY POINTS OF CONNECTION AT THE BUILDING. NOTIFY ARCHITECT OF ANY DISCREPANCIES.
3. GRAVITY SEWER SYSTEMS SHALL BE CONSTRUCTED FROM DOWNSTREAM TO UPSTREAM. VERIFY ALL PIPE SLOPES, INVERTS, AND POINTS OF CONNECTION PRIOR TO CONSTRUCTION. NOTIFY LBYD OF ANY DISCREPANCIES.
4. THE CONTRACTOR SHALL VERIFY ALL EXISTING AND PROPOSED GRAVITY SEWER PIPE GRADES AND POINTS OF CONNECTION PRIOR TO INSTALLATION. LBYD SHALL BE NOTIFIED OF ANY DEVIATIONS PRIOR TO CONSTRUCTION.
5. BACKFLOW PREVENTION AND METERING SHALL BE PROVIDED ON THE FIRE, DOMESTIC, AND IRRIGATION SERVICES IN ACCORDANCE WITH THE LOCAL UTILITY COMPANY AND FIRE DEPARTMENT'S REQUIREMENTS.
6. WATER MAINS 4 INCHES IN DIAMETER AND GREATER SHALL BE DIP(CL.350) AND WATER MAINS LESS THAN 3 INCHES IN DIAMETER SHALL BE PVC (SCHD.40) UNLESS OTHERWISE INDICATED ON THE PLANS.
7. WATER MAINS AND SERVICES SHALL BE A MINIMUM OF 10 FEET HORIZONTAL AND 2 FEET VERTICAL FROM ALL SANITARY SEWER MAINS AND LATERALS.
8. WATER MAINS AND SERVICES SHALL BE INSTALLED IN ACCORDANCE WITH THE LOCAL UTILITY COMPANY'S REQUIREMENTS. ALL MAINS AND SERVICES SHALL BE INSTALLED WITH A MINIMUM OF 36" COVER UNLESS OTHERWISE INDICATED ON PLANS.
9. ALL SANITARY SEWER MAINS AND LATERALS SHALL BE PVC C900(CL.150 DR-18) UNLESS OTHERWISE REQUIRED BY THE LOCAL UTILITY COMPANY.
10. ALL UNDERGROUND ELECTRICAL, TELEPHONE, AND CABLE TV SHALL BE INSTALLED IN PVC CONDUIT OR CONCRETE ENCASED DUCT BANK WITH PULL WIRE MEETING THE LOCAL UTILITY COMPANY'S REQUIREMENTS. INFORMATION SHOWN ON CIVIL DRAWINGS FOR REFERENCE ONLY. REFER TO ELECTRICAL PLANS FOR SPECIFIC INFORMATION.
11. UTILITY TRENCHES SHALL BE BACKFILLED WITH COMPACTED FILL PLACED IN 6 INCH LOOSE LIFTS. FILL SHALL BE COMPACTED TO 98% STANDARD PROCTOR AND OPTIMUM MOISTURE CONTENT WITHIN ±2.0%.
12. WHEN INSTALLING UTILITIES IN EXISTING PAVED AREAS OR IN AREAS WHERE SOILS ARE CONSIDERED UNSUITABLE FOR BEDDING OR BACKFILLING, UTILITY TRENCHES SHALL BE BACKFILLED FULL DEPTH WITH CRUSHED AGGREGATE.
13. WHERE UTILITIES ARE TO BE INSTALLED IN AREAS OF EXISTING PAVING, HARDSCAPE, SIDEWALKS, ETC. CONTRACTOR SHALL SAWCUT AND REMOVE EXISTING PAVING, HARDSCAPE, SIDEWALK ETC. AND REPLACE IN LIKE KIND AND RESTRIPE AS NECESSARY. BACKFILL TRENCH FULL DEPTH WITH STONE.
14. CONTRACTOR IS RESPONSIBLE FOR ADJUSTING ELEVATIONS OF ALL AT-GRADE EXISTING AND PROPOSED STRUCTURES AND UTILITIES TO REMAIN (VALVE BOXES, MANHOLES, INLETS, VAULTS, ETC) TO MATCH PROPOSED FINISHED GRADES.
15. CONTRACTOR IS RESPONSIBLE FOR PROVIDING TAMPER SWITCHES AND ASSOCIATED CONDUIT, WIRING, ETC ON FIRE SERVICE POST INDICATOR VALVES AND VALVES IN PIT MOUNTED FIRE BACKFLOW PREVENTOR ASSEMBLIES. COORDINATE WITH FIRE PROTECTION AND ELECTRICAL PLANS.
16. PROVIDE 4" PVC SCHEDULE 40 GRAVITY DRAIN LINE FROM ALL BELOW GRADE UTILITY VAULTS TO THE NEAREST STORM DRAINAGE INLET OR DAYLIGHT AT GRADE.

LBYD, Inc.
Civil and Structural Engineers
880 Montclair Road
Suite 600
Birmingham, AL 35213
Main (205) 251-4500
PROJECT NO.
133232.001
© copyright 2023
These drawings and design intent are the sole property of LBYD, Inc. which may not be reproduced without written permission

LATHAN ARCHITECTS

CLASSROOM ADDITION FOR
MARGARET ELEMENTARY SCHOOL
680 COUNTY ROAD 12, ODENVILLE, ALABAMA 35120
ST. CLAIR COUNTY BOARD OF EDUCATION

ALABAMA LICENSED No. 24443 PROFESSIONAL ENGINEER CHRISTOPHER ALLEN
1/18/2024

SHEET TITLE:
CIVIL NOTES

PROJ. MGR.: CAH
DRAWN: CAH
DATE: JANUARY 18, 2024
REVISIONS

JOB NO. 23-41
SHEET NO:
C0.1
1 OF 7

0 1" 2"

LBYD, Inc.
Civil and Structural Engineers
880 Montclair Road
Suite 600
Birmingham, AL 35213
Main (205) 251-4500
PROJECT NO.
133232.001
© copyright 2023
These drawings and design intent are the sole property of LBYD, Inc. which may not be reproduced without written permission

LATHAN ARCHITECTS

CLASSROOM ADDITION FOR
MARGARET ELEMENTARY SCHOOL
680 COUNTY ROAD 12, ODENVILLE, ALABAMA 35120
ST. CLAIR COUNTY BOARD OF EDUCATION

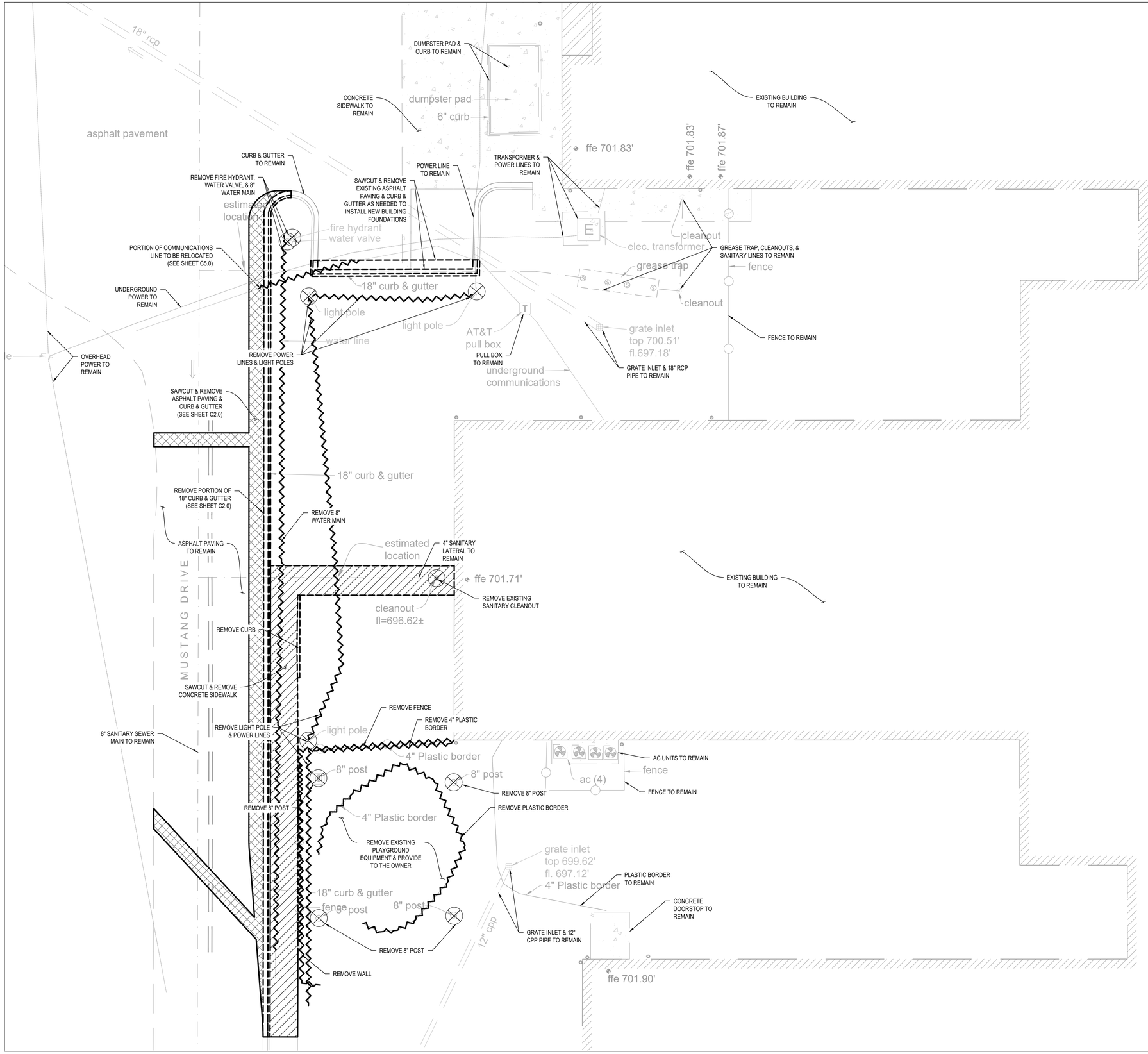

NOTES:
1. SEE SHEET C0.1 FOR ALL APPLICABLE NOTES.

DEMOLITION LEGEND

- ASPHALT TO BE REMOVED
- BUILDING TO BE REMOVED
- CONCRETE TO BE REMOVED
- ITEM TO BE REMOVED
- ITEM TO BE REMOVED

N

0 10 20
5 15
SCALE: 1"=10'

ALABAMA LICENSED No. 24443 PROFESSIONAL ENGINEER CHRISTOPHER ALLEN
1/18/2024

SHEET TITLE:
DEMOLITION PLAN

PROJ. MGR.:	CAH
DRAWN:	CAH
DATE:	JANUARY 18, 2024
REVISIONS	

JOB NO. 23-41

SHEET NO:
C1.0
2 OF 7

0 1" 2"

LBYD, Inc.
Civil and Structural Engineers
880 Montclair Road
Suite 600
Birmingham, AL 35213
Main (205) 251-4500
PROJECT NO.
133232.001
© copyright 2023
These drawings and design intent are the sole property of LBYD, Inc. which may not be reproduced without written permission

LATHAN ARCHITECTS

CLASSROOM ADDITION FOR
MARGARET ELEMENTARY SCHOOL
680 COUNTY ROAD 12, ODENVILLE, ALABAMA 35120
ST. CLAIR COUNTY BOARD OF EDUCATION

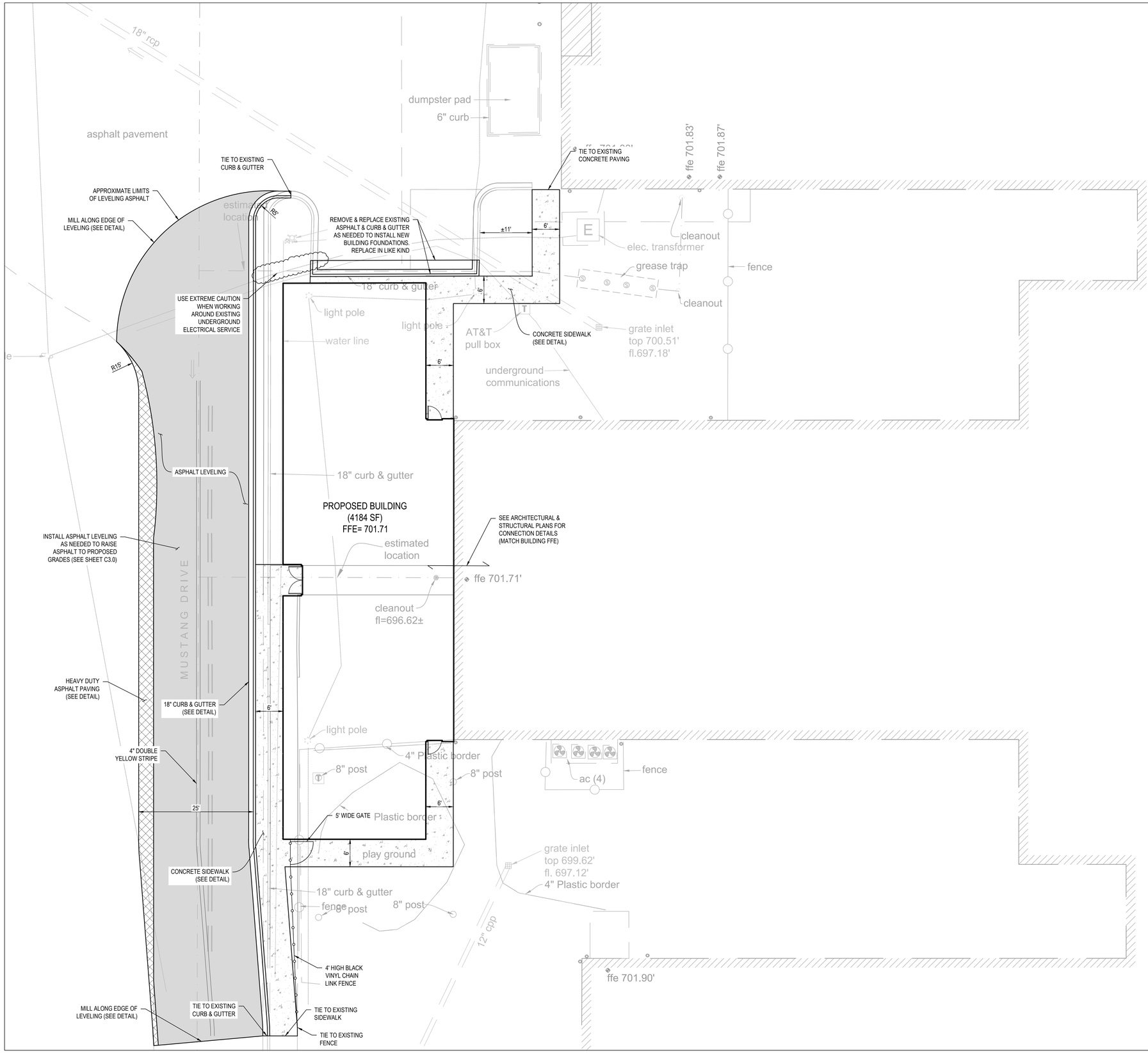

NOTES:
1. SEE SHEET C0.1 FOR ALL APPLICABLE NOTES.
2. CONTRACTOR SHALL CLEAN EXISTING PAVEMENT SURFACE PRIOR TO ADDING LEVELING COURSE. LEVELING COURSE SHALL BE ALDOT 424, TYPE A, WITH A MAXIMUM AGGREGATE SIZE OF 1/4".

SITE LAYOUT LEGEND
- ASPHALT LEVELING
- HEAVY DUTY ASPHALT PAVING
- CONCRETE SIDEWALK

N

0 10 20
5 15
SCALE: 1"=10'

ALABAMA LICENSED No. 24443 PROFESSIONAL ENGINEER CHRISTOPHER ALLEN
1/18/2024

SHEET TITLE:
SITE LAYOUT PLAN

PROJ. MGR.:	CAH
DRAWN:	CAH
DATE:	JANUARY 18, 2024
REVISIONS	

JOB NO. 23-41
SHEET NO:
C2.0
3 OF 7
0 1" 2"

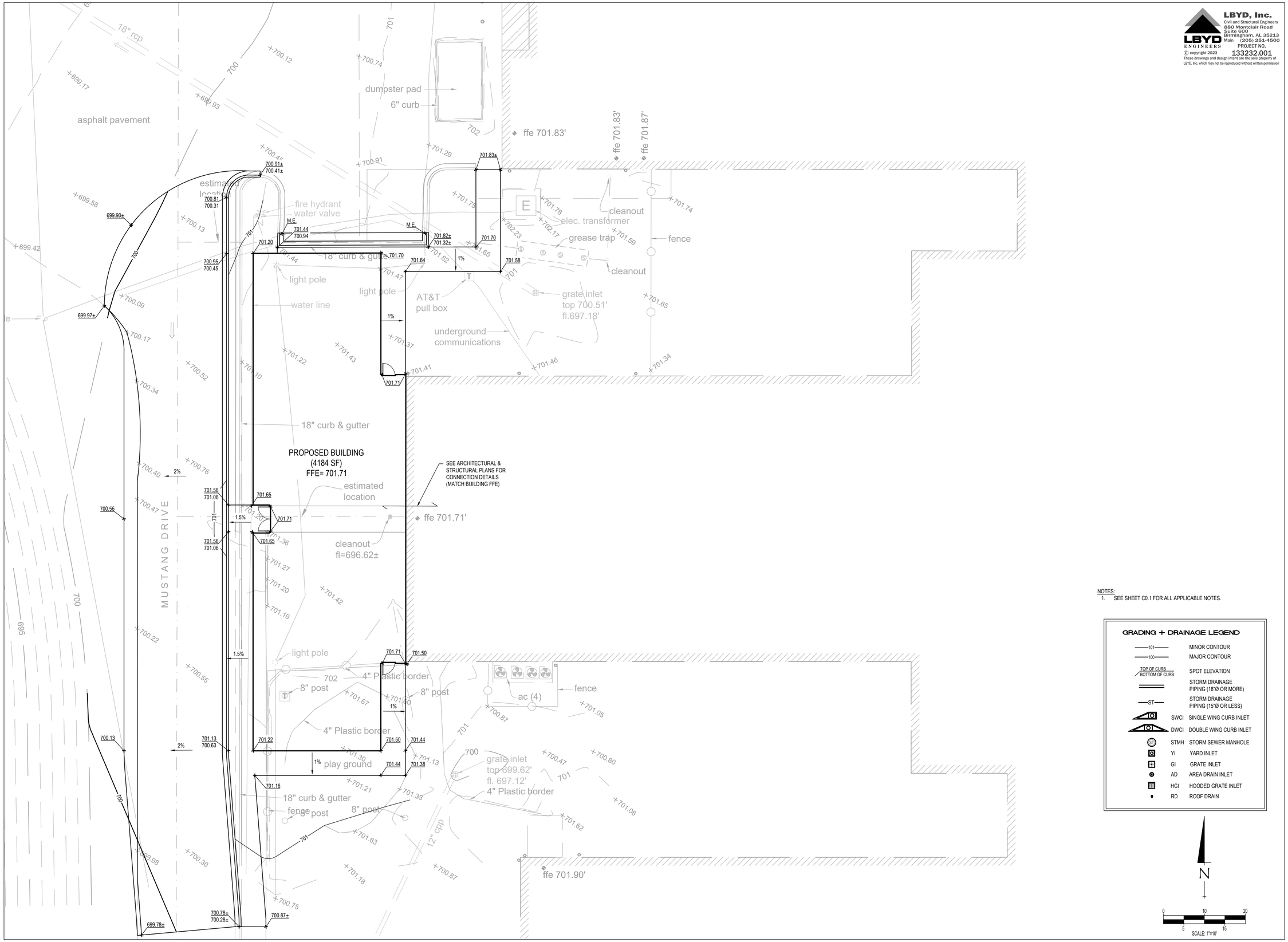

NOTES:
1. SEE SHEET C0.1 FOR ALL APPLICABLE NOTES.

GRADING + DRAINAGE LEGEND

101	MINOR CONTOUR
100	MAJOR CONTOUR
TOP OF CURB / BOTTOM OF CURB	SPOT ELEVATION
	STORM DRAINAGE PIPING (18"Ø OR MORE)
ST	STORM DRAINAGE PIPING (15"Ø OR LESS)
SWCI	SINGLE WING CURB INLET
DWCI	DOUBLE WING CURB INLET
STMH	STORM SEWER MANHOLE
YI	YARD INLET
GI	GRATE INLET
AD	AREA DRAIN INLET
HGI	HOODED GRATE INLET
RD	ROOF DRAIN

N

SCALE: 1"=10'

LBYD, Inc.
Civil and Structural Engineers
880 Montclair Road
Suite 600
Birmingham, AL 35213
Main (205) 251-4500

PROJECT NO. 133232.001

© copyright 2023
These drawings and design intent are the sole property of LBYD, Inc. which may not be reproduced without written permission

LATHAN ARCHITECTS

CLASSROOM ADDITION FOR
MARGARET ELEMENTARY SCHOOL
680 COUNTY ROAD 12, ODENVILLE, ALABAMA 35120
ST. CLAIR COUNTY BOARD OF EDUCATION

ALABAMA LICENSED No. 24443 PROFESSIONAL ENGINEER CHRISTOPHER ALLEN
1/18/2024

SHEET TITLE:
GRADING AND DRAINAGE PLAN

PROJ. MGR.: CAH
DRAWN: CAH
DATE: JANUARY 18, 2024
REVISIONS

JOB NO. 23-41
SHEET NO:
C3.0
4 OF 7

LBYD, Inc.
Civil and Structural Engineers
880 Montclair Road
Suite 600
Birmingham, AL 35213
Main (205) 251-4500
PROJECT NO.
133232.001
© copyright 2023
These drawings and design intent are the sole property of LBYD, Inc. which may not be reproduced without written permission

LATHAN ARCHITECTS

CLASSROOM ADDITION FOR
MARGARET ELEMENTARY SCHOOL
680 COUNTY ROAD 12, ODENVILLE, ALABAMA 35120
ST. CLAIR COUNTY BOARD OF EDUCATION

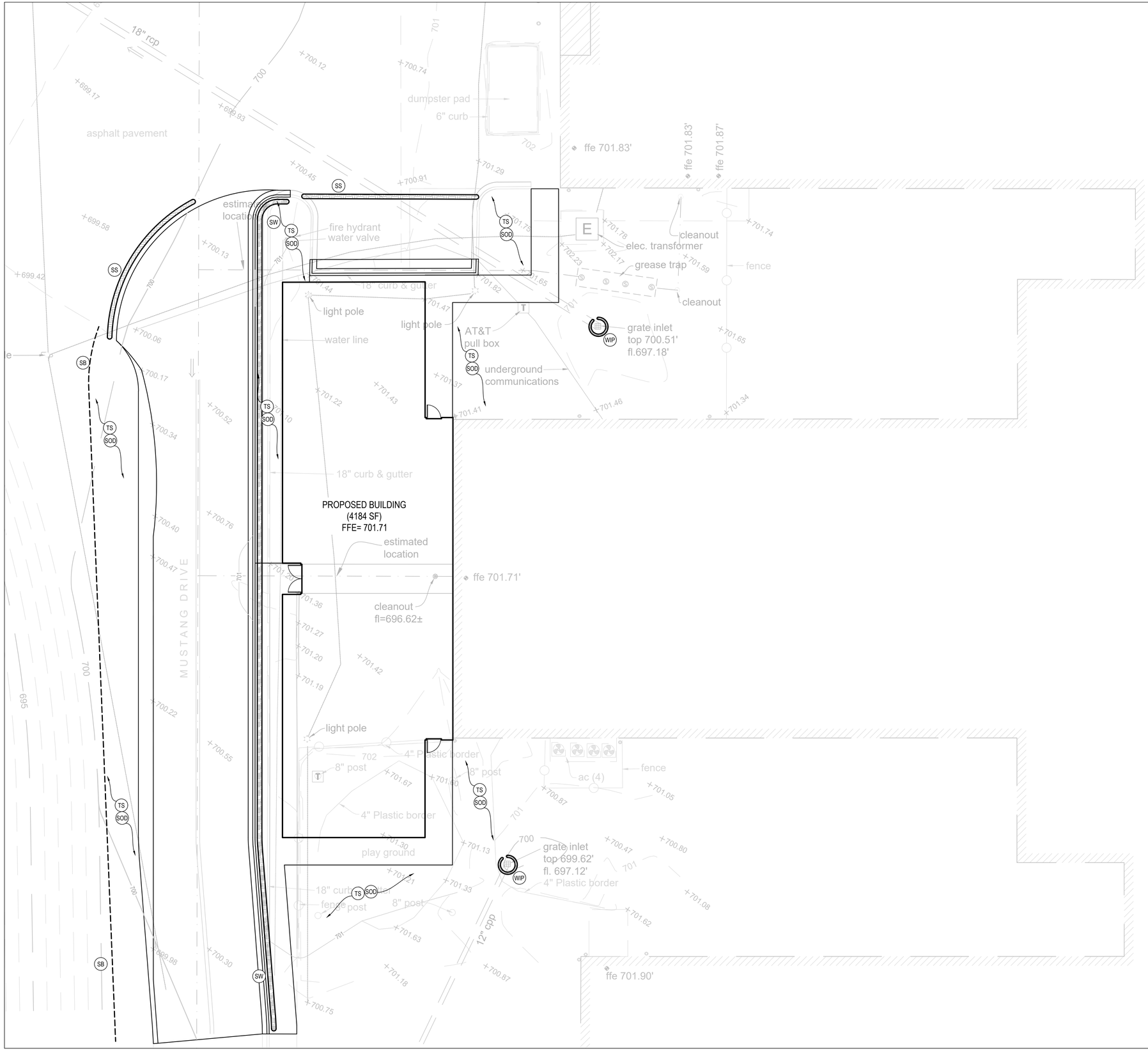

NOTES:
1. SEE SHEET C0.1 FOR ALL APPLICABLE NOTES.
2. ALL DISTURBED AREAS SHALL BE SODDED.

ALABAMA EROSION CONTROL LEGEND

SB	SILT FENCING	TSG	TOPSOIL
SS	SILTSOXX	SOD	SODDING
SW	STRAW WATTLE		

N

0 10 20
5 15
SCALE: 1"=10'

ALABAMA LICENSED No. 24443 PROFESSIONAL ENGINEER CHRISTOPHER ALLEN
1/18/2024

SHEET TITLE:
EROSION CONTROL PLAN

PROJ. MGR.:	CAH
DRAWN:	CAH
DATE:	JANUARY 18, 2024
REVISIONS	

JOB NO. 23-41

SHEET NO:
C4.0
5 OF 7

0 1" 2"

LBYD, Inc.
Civil and Structural Engineers
880 Montclair Road
Suite 600
Birmingham, AL 35213
Main (205) 251-4500
PROJECT NO.
133232.001
© copyright 2023
These drawings and design intent are the sole property of LBYD, Inc. which may not be reproduced without written permission

LATHAN ARCHITECTS

CLASSROOM ADDITION FOR
MARGARET ELEMENTARY SCHOOL
680 COUNTY ROAD 12, ODENVILLE, ALABAMA 35120
ST. CLAIR COUNTY BOARD OF EDUCATION

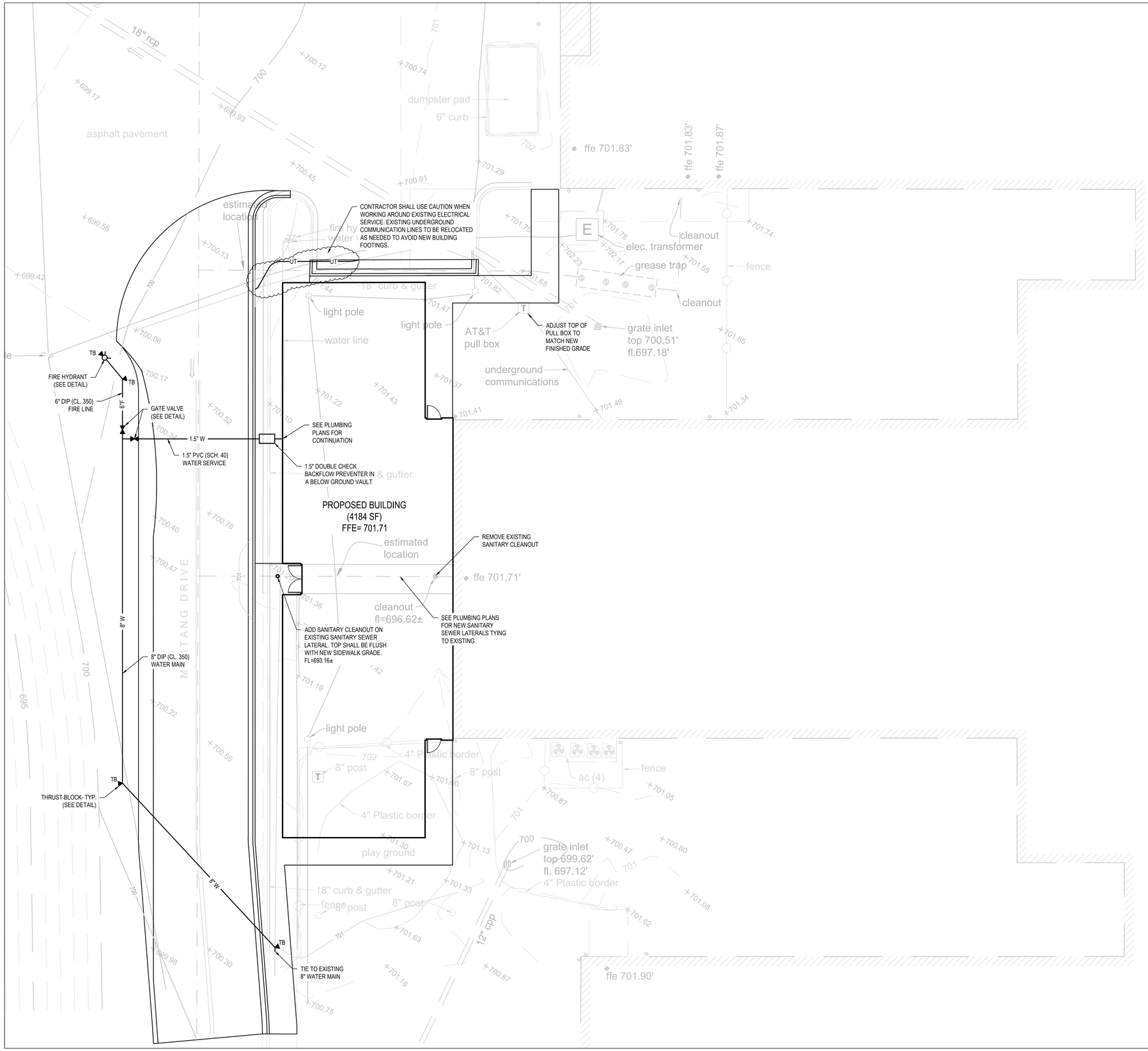

NOTES:
1. SEE SHEET C0.1 FOR ALL APPLICABLE NOTES.
2. SEE ELECTRICAL PLANS FOR RELOCATED SITE LIGHTING & POWER SERVICE. POWER SERVICE SHALL BE FROM WITHIN THE EXISTING BUILDING.

UTILITY LEGEND

F	FIRE SERVICE
W	DOMESTIC WATER
IRR	IRRIGATION SERVICE
UT	COMMUNICATION
UGP	UNDERGROUND POWER
OHP	OVERHEAD POWER
GAS	GAS
SS	SANITARY SEWER
	FIRE HYDRANT
	SANITARY SEWER MANHOLE
CO	CLEANOUT

N

0 10 20
5 15
SCALE: 1"=10'

ALABAMA LICENSED No. 24443 PROFESSIONAL ENGINEER CHRISTOPHER ALLEN HOWELL
1/18/2024

SHEET TITLE:
UTILITY PLAN

PROJ. MGR.: CAH
DRAWN: CAH
DATE: JANUARY 18, 2024
REVISIONS

JOB NO. 23-41
SHEET NO:
C5.0
6 OF 7

0 1" 2"

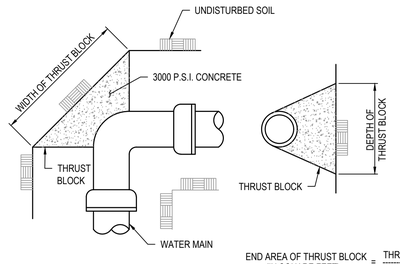

THRUST AT FITTINGS IN POUNDS*

PIPE SIZE	90° BEND	45° BEND	22.5° BEND	TEE OR PLUG
4"	2,666	1,443	735	1,885
6"	5,998	3,246	1,655	4,241
8"	10,663	5,771	2,942	7,540
10"	16,661	9,017	4,597	11,791
12"	23,992	12,984	6,619	16,965
14"	32,655	17,673	9,010	23,091
16"	42,652	23,083	11,768	30,160
18"	53,981	29,214	14,893	38,170
20"	66,643	36,067	18,387	47,124
24"	95,966	51,937	26,477	67,858

*BASED ON 150 PSI TEST PRESSURE

SOIL BEARING LOAD

SOIL	BEARING LOAD P.S.F.
MUCK	0
SOFT CLAY	1,000
SILT	1,500
SANDY SILT	3,000
SAND	4,000
SANDY CLAY	6,000
HARD PAN	9,000

END AREA OF THRUST BLOCK (IN SQUARE FEET) = THRUST (AT FITTING) / SOIL BEARING LOAD (AT FITTING) X 1.5

NOTE: THE WIDTH OF THE THRUST BLOCK SHALL BE 2X THE DEPTH OF THE THRUST BLOCK.

TYPICAL THRUST BLOCK
N.T.S.

MAINTENANCE SCHEDULE:
REMOVE SEDIMENT DEPOSITS PROMPTLY AFTER IT HAS ACCUMULATED TO 1/2 OF THE ORIGINAL CAPACITY, TAKING CARE NOT TO UNDERMINE THE ENTRENCHED WATTLES. INSPECT PERIODICALLY FOR DETERIORATION OR DAMAGE FROM CONSTRUCTION ACTIVITIES. REPAIR DAMAGED BARRIER IMMEDIATELY.

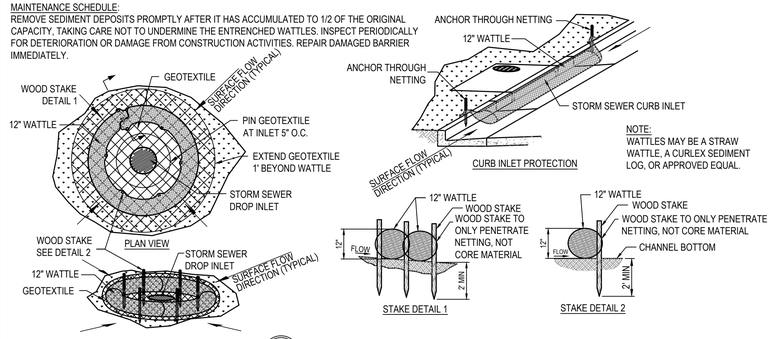

NOTE:
WATTLES MAY BE A STRAW WATTLE, A CURLEX SEDIMENT LOG, OR APPROVED EQUAL.

WIP **WATTLE INLET RPOTECTION**
N.T.S.

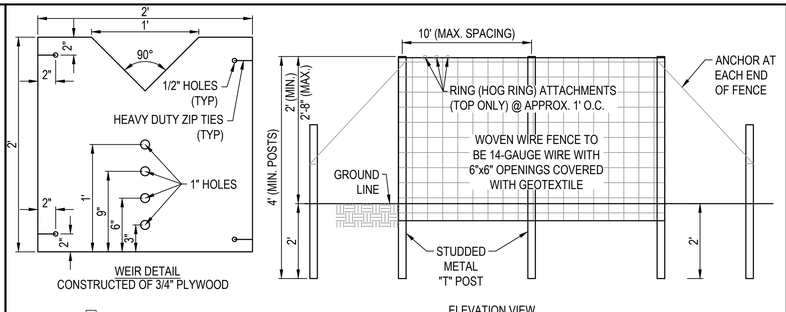

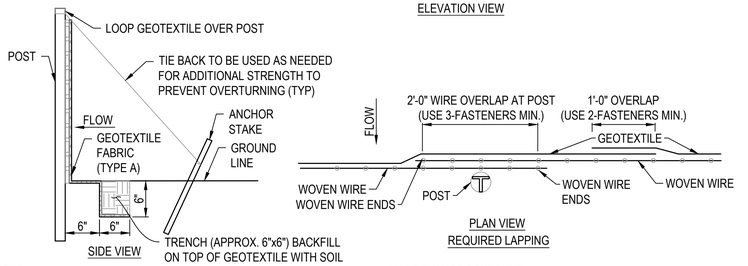

NOTES:
1. SILT FENCE FABRIC SHALL BE PER TABLE SB-1 FROM THE LATEST ALABAMA EROSION CONTROL HANDBOOK.
2. THE POST DIAMETER SHALL BE PER TABLE SB-2 IN THE LATEST ALABAMA EROSION CONTROL HANDBOOK.
3. THE WOVEN WIRE FENCING SHALL BE FASTENED TO THE UPSTREAM SIDE OF THE POST BY STAPLES OR WIRE TIES.
4. GEOTEXTILE FABRIC SHALL BE SECURELY FASTENED TO THE WOVEN WIRE FENCING.
5. THE REQUIRED OVERLAP OF THE SILT FENCE SHALL BE PER ALDOT SPECIAL DRAWING NUMBER ESC-200-4.

MAINTENANCE SCHEDULE:
1. REMOVE SEDIMENT DEPOSITS WHEN THEY REACH A DEPTH OF 15" OR 1/2 THE HEIGHT OF THE FENCE AS INSTALLED TO PROVIDE ADEQUATE STORAGE VOLUME FOR THE NEXT RAIN TO REDUCE PRESSURE ON THE FENCE. SHOULD THE FABRIC OR SILT FENCE COLLAPSE, DECOMPOSE OR BECOME INEFFECTIVE; REPLACE IT PROMPTLY
2. AT FULL STORAGE CAPACITY, THE SILT FENCE SHOULD DEWATER IN 4-12 HOURS.

SB **SEDIMENT BARRIER SILT FENCE - TYPE A**
N.T.S.

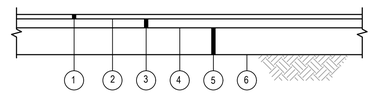

1. REQUIRED 1.5" IMPROVED BITUMINOUS CONCRETE, WEARING LAYER (ALDOT 424A)
2. REQUIRED TACK COAT (ALDOT 405).
3. REQUIRED 2" BITUMINOUS CONCRETE UPPER BINDER LAYER (ALDOT 424B).
4. REQUIRED BITUMINOUS TREATMENT (PRIME) (ALDOT 401, TYPE A).
5. REQUIRED 8" CRUSHED AGGREGATE BASE COURSE, TYPE B, (ALDOT 825).
6. SUBGRADE: TOP 12 INCHES - 98% COMPACTION (ASTM D-698).

NOTE: ALL MIX DESIGNS ARE PER THE "ALABAMA DEPARTMENT OF TRANSPORTATION STANDARD SPECIFICATIONS FOR HIGHWAY CONSTRUCTION" - 2018 EDITION.

HEAVY DUTY ASPHALT PAVING
N.T.S.

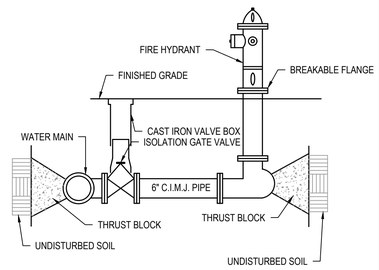

FIRE HYDRANT ASSEMBLY
N.T.S.

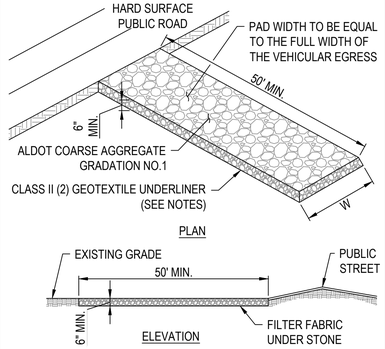

NOTES :
1. INSTALL A STABILIZED PAD OF CRUSHED STONE SPREAD OVER FILTER FABRIC WHERE TRAFFIC WILL BE ENTERING OR LEAVING A CONSTRUCTION SITE TO OR FROM A PUBLIC STREET. THE STONE MUST BE ALDOT GRADATION NO. 1 STONE, FILTER FABRIC MUST BE NONWOVEN GEOTEXTILE CLASS II (2) PER AASHTO M288 OR APPROVED EQUAL.
2. MAINTAIN THE ENTRANCE IN A CONDITION WHICH WILL PREVENT TRACKING OR FLOWING OF SEDIMENT ONTO PUBLIC STREETS OR EXISTING PAVEMENT. INSTALL PERIODIC TOP DRESSING WITH ADDITIONAL STONE AS NECESSARY. REPAIR AND/OR CLEANOUT MEASURES USED TO TRAP SEDIMENT AS NECESSARY.
3. ALL SEDIMENT SPILLED, DROPPED, WASHED OR TRACKED ONTO PUBLIC STREETS MUST BE REMOVED IMMEDIATELY BY STREET CLEANING (NOT FLUSHING). WHEELS MUST BE CLEANED TO REMOVE SEDIMENT PRIOR TO ENTERING A PUBLIC STREET. WASHING MUST TAKE PLACE ON AN AREA STABILIZED WITH CRUSHED STONE THAT DRAINS INTO AN APPROVED SEDIMENT BASIN.
4. A DIVERSION BERM 6" - 8" HIGH WITH 3:1 SIDE SLOPES MUST BE CONSTRUCTED IF THE PAD SLOPE EXCEEDS 2% TOWARDS THE ROAD. DIVERSION BERM MUST SPAN ACROSS THE FOUNDATION APPROXIMATELY 15' AWAY FROM THE ROAD AND DRAIN INTO A SEDIMENT TRAP OR BASIN.

CEP **CONSTRUCTION EXIT PAD**
N.T.S.

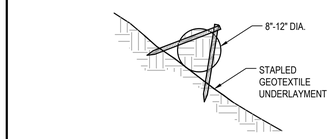

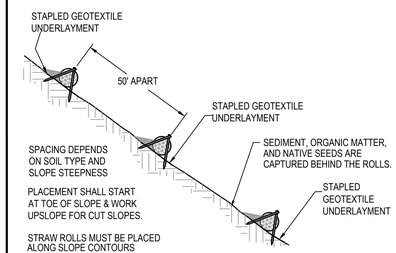

NOTE:
1. WATTLE CHECK DAMS TO BE INSTALLED WITHOUT TRENCHING AND ON TOP OF STAPLED GEOTEXTILE UNDERLAYMENT THAT EXTENDS A MINIMUM 3 FT. UP AND DOWNSTREAM FROM THE WATTLE. WATTLES MUST BE PROPERLY STAPLED WITH SOD STAPLES ON 10-INCH CENTERS ON EACH SIE OF THE WATTLE TO PREVENT FLOTATION AND STAKED OVER THE TOP USING NON-DESTRUCTIVE TEE-PEE TYPE STAKING.
2. STRAW WATTLES SHALL BE INSTALLED ON CONTOUR W/ A SLIGHT DOWNWARD ANGLE AT THE END OF THE ROW IN ORDER TO PREVENT PONDING AT THE MID-SECTION.
3. WATTLES MAY BE A STRAW WATTLE, A CURLEX SEDIMENT LOG, OR APPROVED EQUAL.

SW **WATTLE SLOPE PROTECTION**
N.T.S.

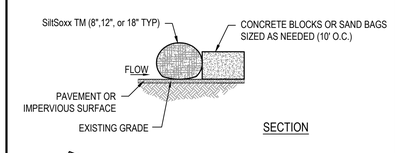

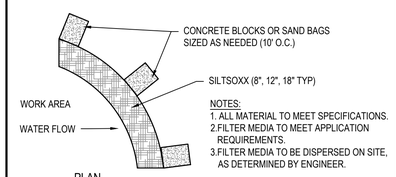

NOTES:
1. ALL MATERIAL TO MEET SPECIFICATIONS.
2. FILTER MEDIA TO MEET APPLICATION REQUIREMENTS.
3. FILTER MEDIA TO BE DISPERSED ON SITE, AS DETERMINED BY ENGINEER.

SiltSoxxTM for Sediment Control on Pavement
N.T.S.

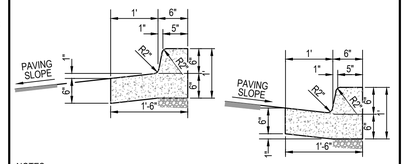

NOTES:
1. SLOPE GUTTER AS SHOWN ACCORDING TO PAVING SLOPE. THIS SLOPE SHALL NOT EXCEED 5% TO COMPLY WITH ADA REQUIREMENTS AT ANY HANDICAP RAMP.
2. PROVIDE EXPANSION JOINTS WITH PREFORMED JOINT FILLER MATERIAL CUT TO MATCH SHAPE OF CURB AND GUTTER OF AT LEAST 1/2 INCH IN WIDTH AT INTERVALS NOT LESS THAN 30' NOR GREATER THAN 100' AND AT P.C.'S AND P.T.'S OF ALL CURVES, AT STRUCTURES (CURB INLETS, WHEELCHAIR RAMPS, ETC.).
3. SAWCUT 3/16" JOINTS AT SPACING NOT LESS THAN 5' AND NOT TO EXCEED 15' JOINT DEPTH SHALL BE 1/4 DEPTH OF CURB/GUTTER. JOINT TO BE PERPENDICULAR TO THE RUN OF THE CURB AND GUTTER.
4. IF ADJACENT TO CONCRETE PAVING SIDEWALK LINE UP JOINTS WITH ADJACENT CONCRETE JOINTS.
5. 3,500 PSI CONCRETE UNLESS STATED OTHERWISE.
6. PROVIDE 6" CRUSHED STONE BASE UNDER ALL CURBS AND GUTTERS.
7. VERIFY SHAPE OF CURB TO MATCH ANY EXISTING CONDITIONS OR LOCAL STANDARDS.

18" CURB & GUTTER
N.T.S.

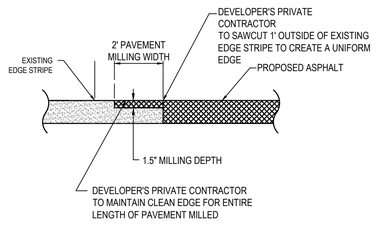

LONGITUDINAL ASPHALT PAVEMENT MILLING
N.T.S.

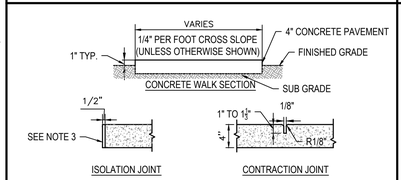

NOTES:
1. CONTRACTION (SAW CUT) JOINTS TO BE EVERY 5 TO 8 FEET WITH A MAXIMUM SPACING OF TWICE THE SLAB THICKNESS IN FEET; CUT TO A DEPTH OF 1" MINIMUM TO 1 1/4" MAXIMUM.
2. CUT CONTRACTION JOINTS BETWEEN 2 HOURS AND 12 HOURS OF CONCRETE PLACEMENT.
3. PLACE ISOLATION JOINTS WHEN ADJACENT TO BUILDINGS, CURBS, ETC. USE A 1/2" THICK PRE-MOULDED EXPANSION JOINT FILLER CONFORMING TO ASTM D1751 OR D1752 TO CREATE A BOND BREAK. INSTALL JOINT SEALER OVER JOINT FILLER.
4. CONCRETE TO BE 4000 PSI COMPRESSIVE STRENGTH UNLESS OTHERWISE NOTED.
5. PLACE SIDEWALK ON COMPACTED SUBGRADE- 98% STANDARD PROCTOR DENSITY (ASTM D698) UNLESS OTHERWISE NOTED.

TYPICAL SIDEWALK DETAIL
N.T.S.

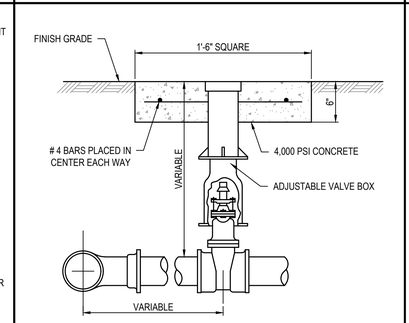

TYPICAL GATE VALVE
N.T.S.

LBYD, Inc.
Civil and Structural Engineers
880 Montclair Road
Suite 600
Birmingham, AL 35213
Main (205) 251-4500
PROJECT NO.
133232.001
© copyright 2023
These drawings and design intent are the sole property of LBYD, Inc. which may not be reproduced without written permission

LATHAN ARCHITECTS

CLASSROOM ADDITION FOR
MARGARET ELEMENTARY SCHOOL
680 COUNTY ROAD 12, ODENVILLE, ALABAMA 35120
ST. CLAIR COUNTY BOARD OF EDUCATION

ALABAMA LICENSED No. 24443 PROFESSIONAL ENGINEER CHRISTOPHER ALLEN
1/18/2024

SHEET TITLE:
CIVIL DETAILS

PROJ. MGR.: CAH
DRAWN: CAH
DATE: JANUARY 18, 2024
REVISIONS

JOB NO. 23-41

SHEET NO:
C6.0
7 OF 7

0 1" 2"

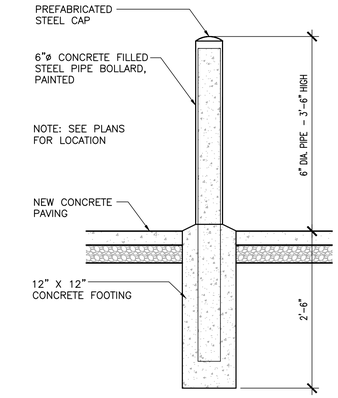

2 DETAIL @ BOLLARD

SCALE: 3/4" = 1'-0"

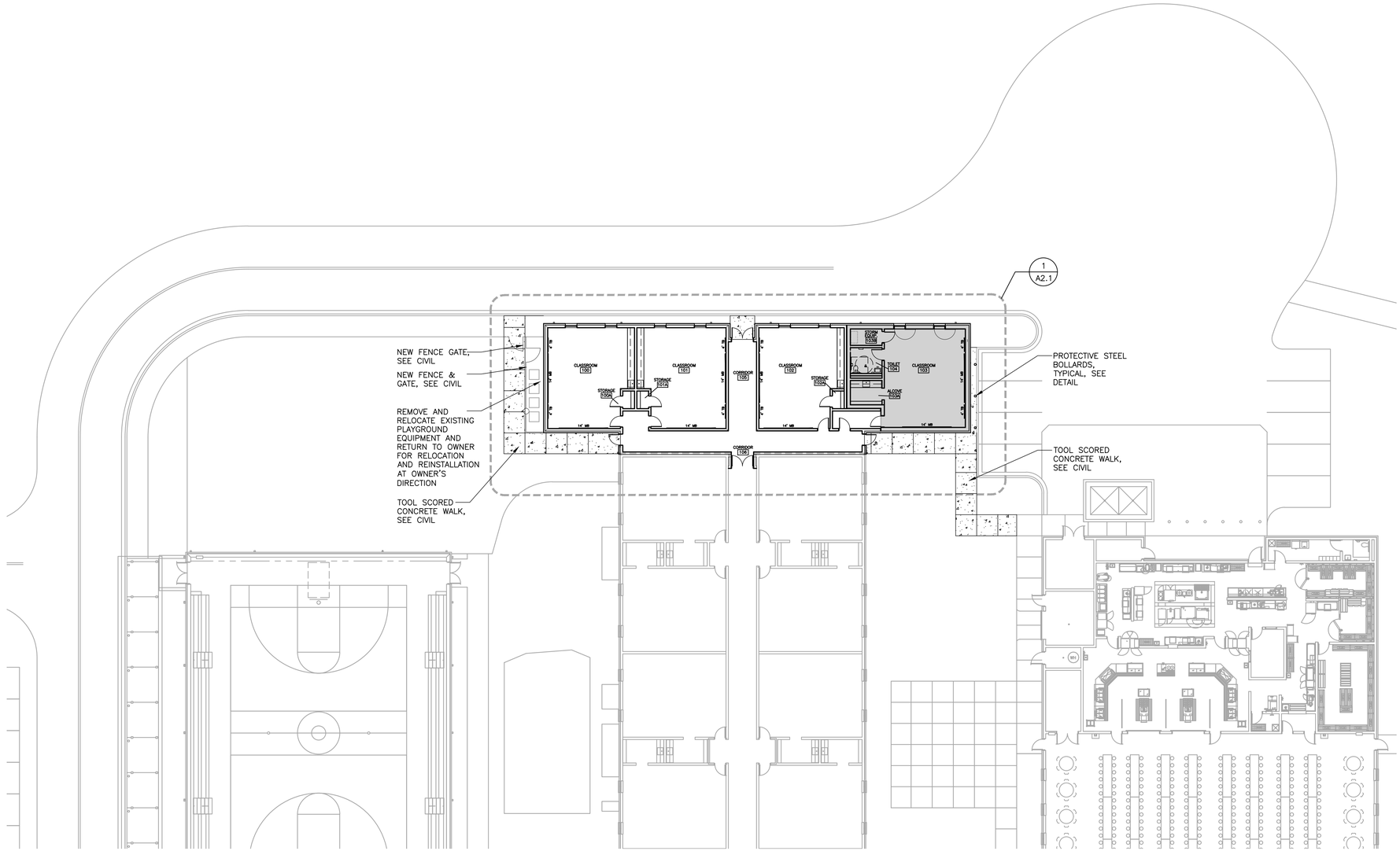

1 ARCHITECTURAL SITE PLAN

SCALE: 1/16" = 1'-0"

LATHAN ARCHITECTS

CLASSROOM ADDITION FOR
MARGARET ELEMENTARY SCHOOL
680 COUNTY ROAD 12, ODENVILLE, ALABAMA 35120
ST. CLAIR COUNTY BOARD OF EDUCATION

STATE OF ALABAMA
No. 3365
RICK N. LATHAN
REGISTERED ARCHITECT

SHEET TITLE:
ARCHITECTURAL SITE PLAN

PROJ. MGR.: S. WILSON
DRAWN: K. RENTA
Rasco
DATE: JANUARY 11, 2024
REVISIONS

JOB NO. 23-41
SHEET NO:
A1.1
1 OF 14

0 1" 2"

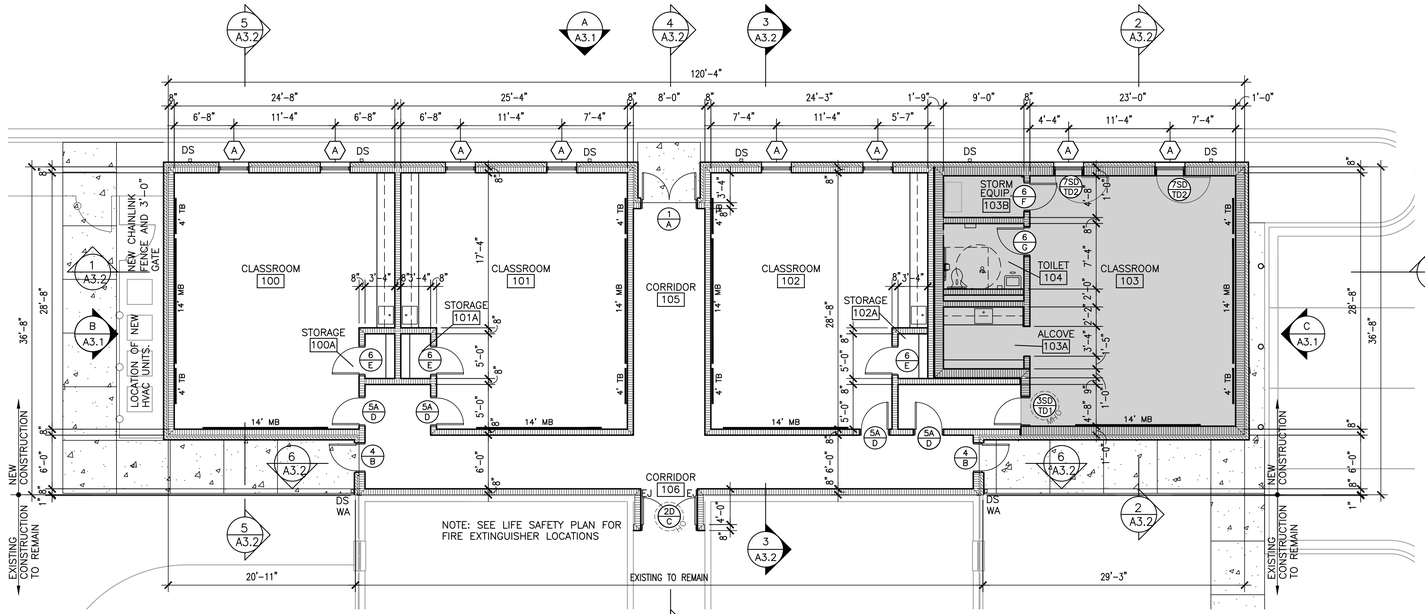

1 FLOOR PLAN

SCALE: 1/8" = 1'-0"

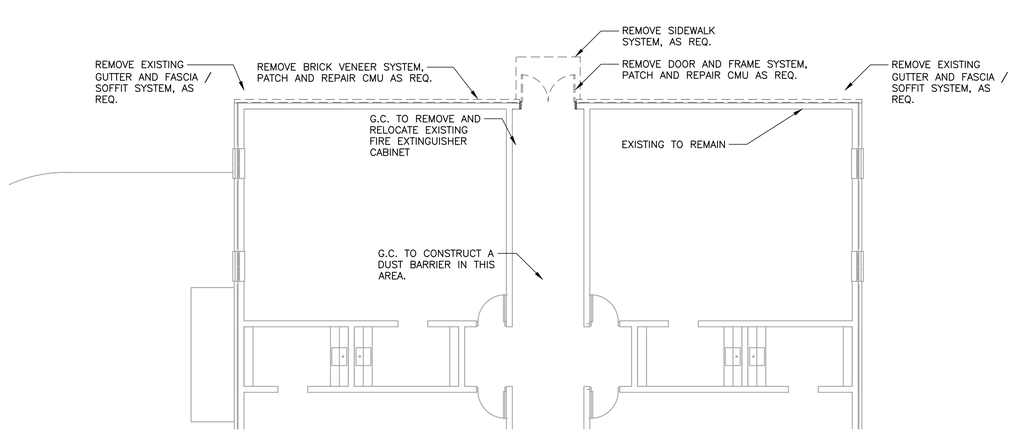

2 DEMOLITION FLOOR PLAN

SCALE: 1/8" = 1'-0"

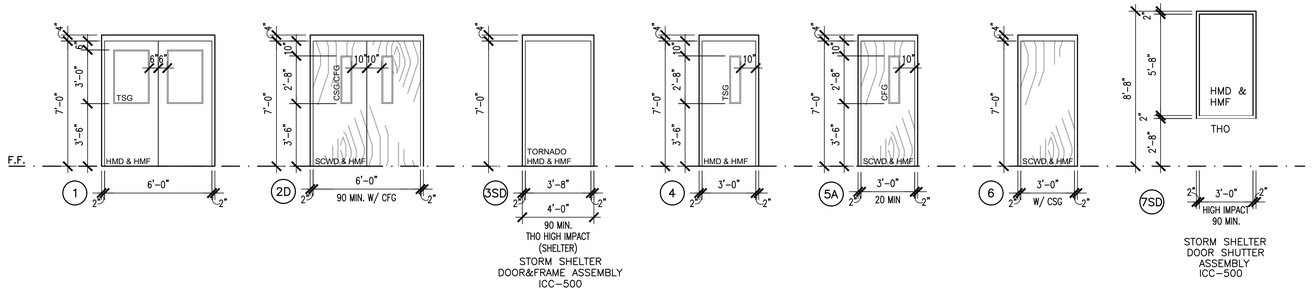

3 DOOR SCHEDULE

SCALE: 1/4" = 1'-0"

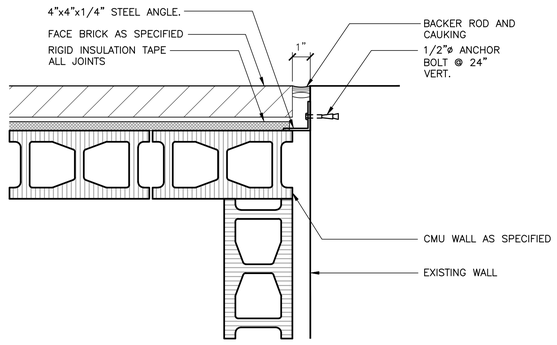

TYPICAL WINDSTOP DETAIL

1 1/2" = 1'-0"

GENERAL NOTES

SEE ARCHITECTURAL FINISH PLANS AND SPECIFICATIONS FOR AREAS REQUIRING THICKSET OR THINSET CERAMIC TILE INSTALLATION. COORDINATE WITH SUBCONTRACTOR AND DROP CONCRETE FLOOR SLAB IN SUCH AREAS AS REQUIRED AND RECOMMENDED BY THE TILE MANUFACTURER AND THE "TILE COUNCIL OF AMERICA." PROVIDE SLOPE FOR POSITIVE DRAINAGE IN AREAS WITH FLOOR DRAINAGE SYSTEM.
EXTEND & KEY RATED WALLS TO BOTTOM OF ROOF DECK - SEE LIFE SAFETY DRAWINGS FOR RATED WALL LOCATIONS.
COORDINATE W/ ELECTRICAL & MECHANICAL AND PROVIDE CONCRETE EQUIPMENT PAD AS REQUIRED
SEE ELEVATIONS AND ROOF PLAN FOR DOWNSPOUT LOCATIONS
SEE CIVIL DRAWINGS FOR CONTINUATION OF SIDEWALKS
ALL PLAN DIMENSIONS ARE TO FACE OF CMU AND TO OUTSIDE OF BRICK , STONE AND TO FACE OF GYP. BD. UNLESS NOTED OTHERWISE
WINDOWS ARE DIMENSIONED TO THE CENTER LINE
SLOPE ALL SIDEWALKS AWAY FROM THE BUILDING
ALL DOWNSPOUTS INTERSECTING CONCRETE PADS AND/OR WALKS SHALL BE PROVIDED WITH BOOTS AND 4" DIAMETER LEADER PIPING EXTENDED AND TIED INTO STORM DRAINAGE SYSTEM
SLOPE FINISH FLOOR TO FLOOR DRAINS. SEE PLUMBING FOR LOCATIONS OF FLOOR DRAINS.
PROVIDE BULLNOSE CMU AT ALL OUTSIDE CORNERS, SEE TYPICAL DETAILS.

WALL TYPE LEGEND

EXTERIOR WALL	NEW 4" BRICK VENEER W/ AIR SPACE AND RIGID INSULATION ON REINFORCED CMU WITH DAMPPROOFING. PROVIDE BRICK WALL TIES @ 16" O.C.
CMU WALL	8" OR 12" CONCRETE MASONRY WALL. SEE PLAN FOR WALL WIDTH CHANGES SEE LIFE SAFETY PLAN FOR FIRE RATING
SOUND ATTENUATION PARTITION	8" OR 12" CONCRETE MASONRY WALL WITH SOUND ATTENUATION

DOOR PLACEMENT LEGEND

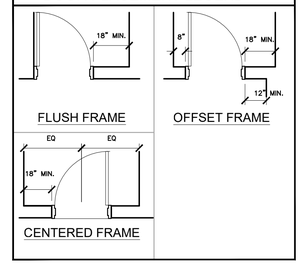

DOOR FIRE RATING LEGEND

DOOR TYPE (2)	NO RATING
DOOR TYPE + A (2A)	20 MINUTE RATING
DOOR TYPE + D (2D)	90 MINUTE RATING
DOOR TYPE + S+D (2SD)	90 MINUTE TORNADO STORM IMPACT RATING

SYMBOLS LEGEND

A200 ROOM NUMBER	TC DOOR TYPE / DOOR RATING / A HARDWARE SYMBOL
FEC RECESSED FIRE EXTINGUISHER CABINET WITH EXTINGUISHER	TC DOOR TYPE / DOOR RATING / A HARDWARE SYMBOL / DOOR ALTERNATE
FE SURFACE MOUNT FIRE EXTINGUISHER	A / A1.1 ELEV. MARK / SHEET NUMBER
+ INTERIOR FLOOR ELEVATION	1 / A1.1 WALL SECT. MARK / SHEET NUMBER
TB TACK BOARD	
MB MARKER BOARD	1 / A1.1 BLDG. SECT. MARK / SHEET NUMBER
CJ CONTROL JOINT	5 / A5.1 ELEV. MARK / SHEET NUMBER
EJ EXPANSION JOINT	INT. ELEVATION
AREA OF CONCRETE	A EXTERIOR WINDOW
TBC TACKBOARD CABINET	NEW DOOR AND SWING
SB SMART BOARD	EXISTING DOOR
WA WIND ANGLE	
MHO MANUAL HOLD OPEN	
HO HOLD OPEN CONNECT TO FIRE ALARM	

DOOR LEGEND

CFG	CLEAR FIRE RATED SAFETY GLASS AS SPECIFIED.
TSG	1" TINTED INSULATED LOW-E TEMPERED SAFETY GLASS AS SPEC.
SCWD	SOLID CORE WOOD DOOR
HMD	HOLLOW METAL DOOR
HMF	HOLLOW METAL FRAME
THO	TORNADO STORM SYSTEM W/ MECHANICAL HOLD OPENS
HO	HOLD OPENS TIED TO FIRE ALARM SYSTEM
MHO	MANUAL HOLD OPEN

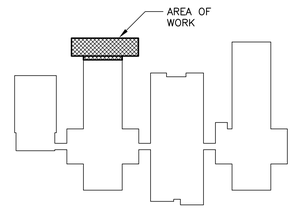

KEY PLAN

NTS

LATHAN ARCHITECTS

CLASSROOM ADDITION FOR
MARGARET ELEMENTARY SCHOOL
680 COUNTY ROAD 12, ODENVILLE, ALABAMA 35120
ST. CLAIR COUNTY BOARD OF EDUCATION

STATE OF ALABAMA
No. 3365
RICK N. LATHAN
REGISTERED ARCHITECT

SHEET TITLE:
FLOOR PLAN, DEMOLITION PLAN AND DOOR SCHEDULE

PROJ. MGR.: S. WILSON
DRAWN: S.W.
Rasco
DATE: JANUARY 11, 2024
REVISIONS

JOB NO. 23-41
SHEET NO:
A2.1
2 OF 14

0 1" 2"

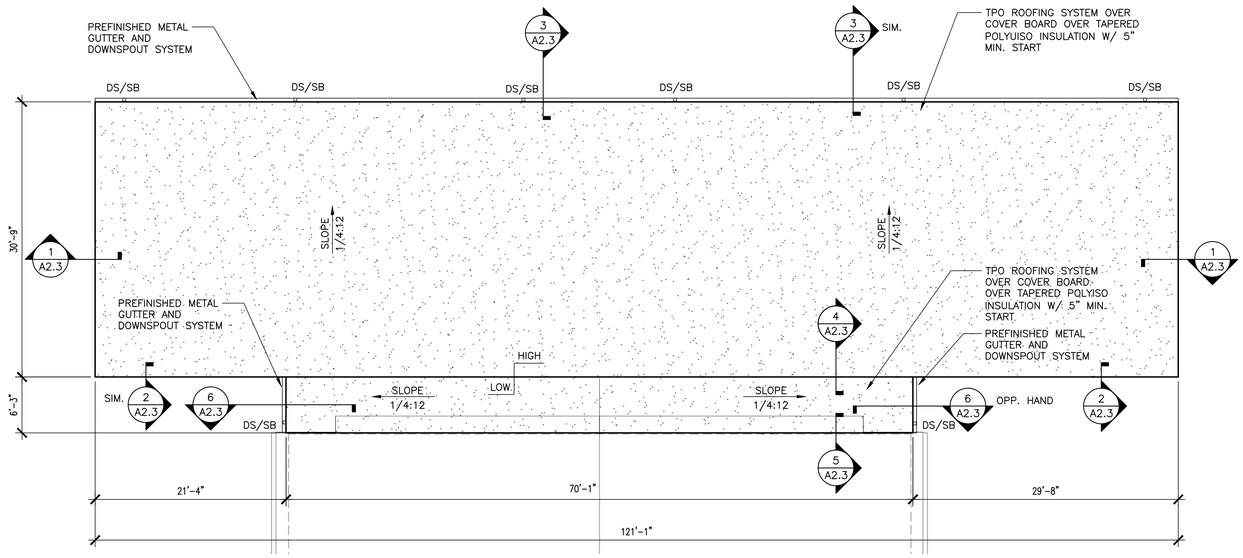

1 ROOF PLAN

SCALE: 1/8" = 1'-0"

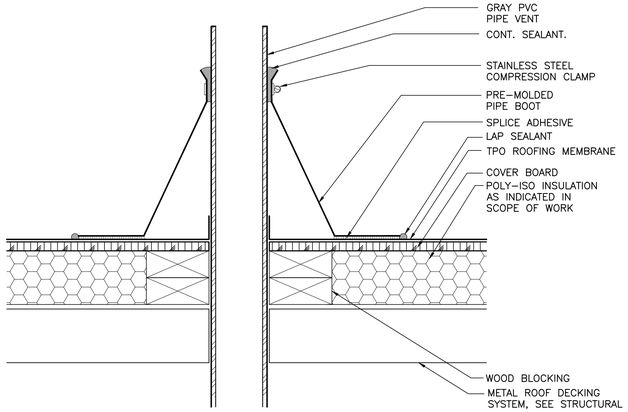

2 PLUMBING VENT DETAIL

SCALE: 3" = 1'-0"

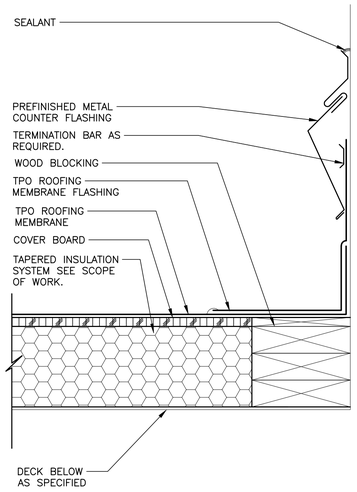

3 ROOF TO WALL FLASHING DETAIL

SCALE: 3" = 1'-0"

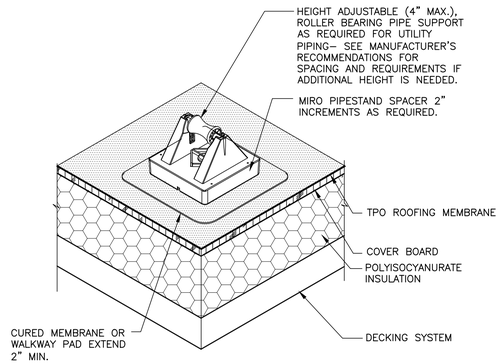

4 PIPE SUPPORT DETAIL

SCALE: 3" = 1'-0"

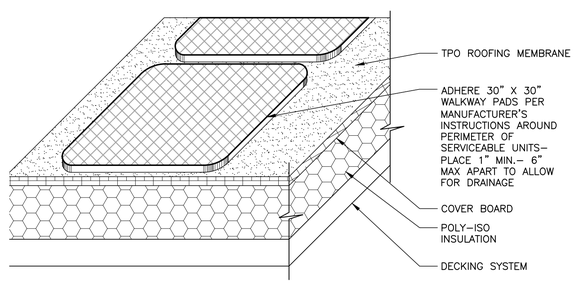

5 WALKWAY PAD DETAIL

SCALE: 3" = 1'-0"

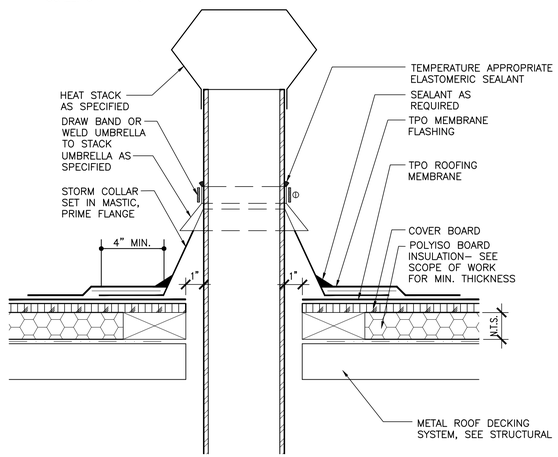

6 HEAT STACK DETAIL

SCALE: 3" = 1'-0"

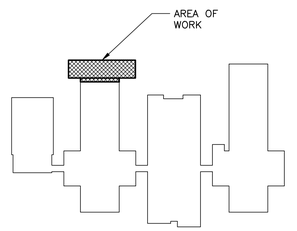

KEY PLAN

NTS

ROOF LEGEND

DETAIL NUMBER / SHEET NUMBER — ROOF DETAIL MARKER		NEW TPO ROOF SYSTEM	
DIRECTION OF DOWNWARD SLOPE, 1/4:12, RISE: RUN — ROOF SLOPE MARKER		EXISTING ROOF SYSTEM	
DS	EXISTING DOWNSPOUT	N.I.C.	NOT IN CONTRACT
RD	ROOF DRAIN	PV	PLUMBING VENT
OD	OVERFLOW DRAIN	SB	SPLASH BLOCK
G	EXISTING GUTTER	DV	DORMER VENT
GEJ	GUTTER EXPANSION JOINT	OFN	OVERFLOW NOZZLE
BT	BOOT		

GENERAL ROOF NOTES

1. INSURE ADEQUATE CIRCULATION IS PROVIDED FOR ALL AREAS. INSURE UNOBSTRUCTED SOFFIT VENTS AND PROPERLY OPERATING ATTIC EXHAUST FANS.
2. PROVIDE PREFINISHED SHEET METAL AND FLASHING COMPONENTS INCLUDING: EDGE METAL, PIPE FLASHING, EAVE DRIPS, FASCIA METAL, REGLET FLASHING, ETC.
3. ALL GUTTERS SHALL HAVE POSITIVE DRAINAGE TO DOWNSPOUT LOCATIONS AND SHALL HAVE PROPER ATTACHMENT AS REQUIRED. PREP AND SEAL ALL GUTTER JOINTS AND OUTLET TUBES AS REQUIRED.
4. PROVIDE CLEAN-UP AND CORRECT ANY DAMAGES TO EXISTING BUILDING AND GROUNDS.
5. PROVIDE FLASHING AS REQUIRED AT ALL MECHANICAL, PLUMBING AND ELECTRICAL PENETRATIONS WHETHER INDICATED OR NOT. MAKE ALL PENETRATIONS WEATHERTIGHT UNDER ROOFING SCOPE OF WORK.
6. SEE MECHANICAL, PLUMBING AND ELECTRICAL FOR ADDITIONAL ROOF WORK AND PENETRATIONS; MAKE ALL PENETRATIONS WEATHERTIGHT UNDER ROOFING SCOPE OF WORK.
7. ALL DOWNSPOUTS TO EXIT ON GRADE UNLESS NOTED OTHERWISE. PROVIDE SPLASH BLOCKS AT EACH DOWNSPOUT LOCATION. COORDINATE WITH CIVIL.
8. NEW DOWNSPOUTS SHOWN ON THIS SHEET ARE SHOWN AS REFERENCE ONLY. CONTRACTOR TO SEE ELEVATIONS FOR DOWNSPOUT LOCATIONS AND TO AVOID ANY CONFLICT WITH DOORS, WINDOWS, AND HEAVY TRAFFIC AREAS.
9. MODIFY EXISTING ROOFING SYSTEM AS REQUIRED TO TIE INTO AND BLEND INTO NEW ROOFING SYSTEM FOR A COMPLETE AND WATERTIGHT ROOFING SYSTEM WITH NEW AND EXISTING COMPONENTS.

NEW TPO ROOF SCOPE OF WORK

1. PROVIDE ROOF DECKING SYSTEM AS INDICATED BY STRUCTURAL.
2. PROVIDE BLOCKING, WOOD CANTS, FASCIA BOARDS ETC. AS INDICATED AND REQUIRED.
3. PROVIDE ICE AND WATER SHIELD IN ALL VALLEYS, PERIMETERS, AND ALONG PARAPET WALLS REGARDLESS OF SLOPE AS INDICATED IN SPECIFICATIONS.
4. PROVIDE TAPERED POLYISOCYANURATE INSULATION SYSTEM WITH 5" MINIMUM START FULLY ADHERED IN MANUFACTURER'S RECOMMENDED SEALANT AS SPECIFIED.
5. PROVIDE COVER BOARD FULLY ADHERED IN MANUFACTURER'S APPROVED SEALANT AS SPECIFIED.
6. PROVIDE TPO ROOFING SYSTEM AS SPECIFIED. INSTALLED IN ACCORDANCE WITH SPECIFICATIONS AND MANUFACTURER'S RECOMMENDATIONS.
7. PROVIDE PREFINISHED METAL FLASHING SYSTEM AT CONNECTOR TO THE EXISTING BUILDING AS REQUIRED.

LATHAN ARCHITECTS

CLASSROOM ADDITION FOR
MARGARET ELEMENTARY SCHOOL
680 COUNTY ROAD 12, ODENVILLE, ALABAMA 35120
ST. CLAIR COUNTY BOARD OF EDUCATION

STATE OF ALABAMA
No. 3365
RICK N. LATHAN
REGISTERED ARCHITECT

SHEET TITLE:
ROOF PLANS

PROJ. MGR.: S. WILSON
DRAWN: S.W.
Rasco
DATE: JANUARY 11, 2024
REVISIONS

JOB NO. 23-41
SHEET NO:
A2.2
3 OF 14

0 1" 2"

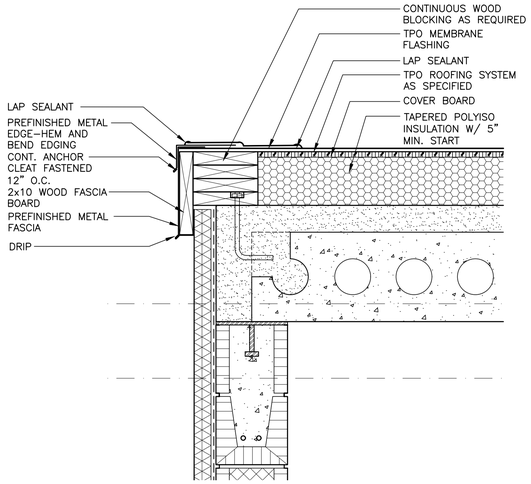

1 ROOF SECTION

SCALE: 1-1/2" = 1'-0"

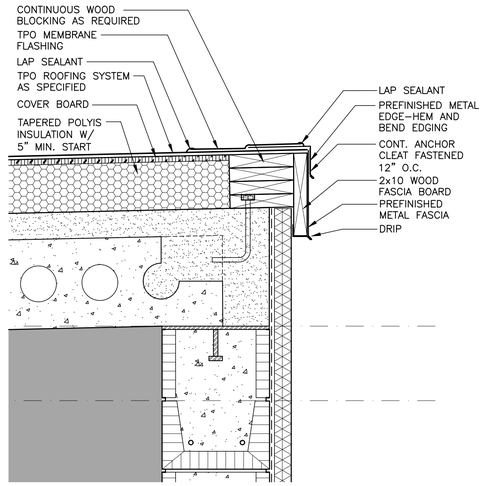

2 ROOF SECTION

SCALE: 1-1/2" = 1'-0"

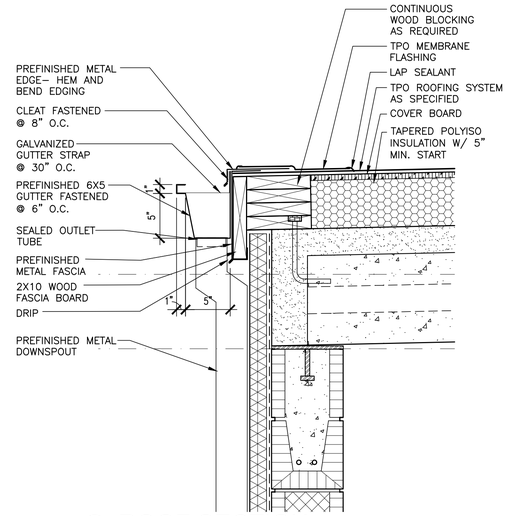

3 ROOF SECTION

SCALE: 1-1/2" = 1'-0"

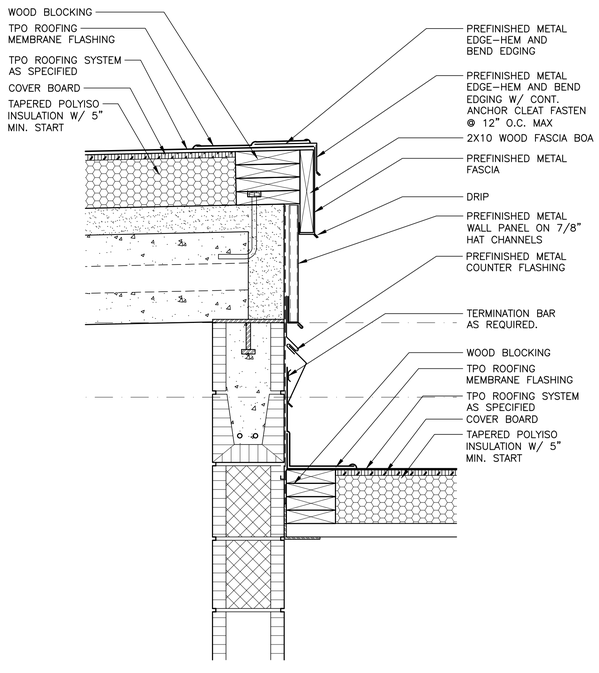

4 ROOF SECTION

SCALE: 1-1/2" = 1'-0"

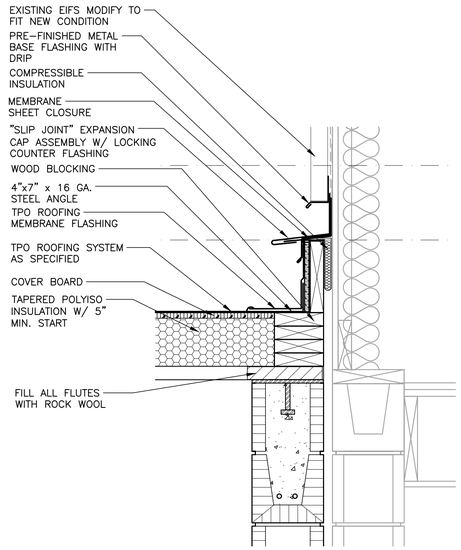

5 ROOF SECTION

SCALE: 1-1/2" = 1'-0"

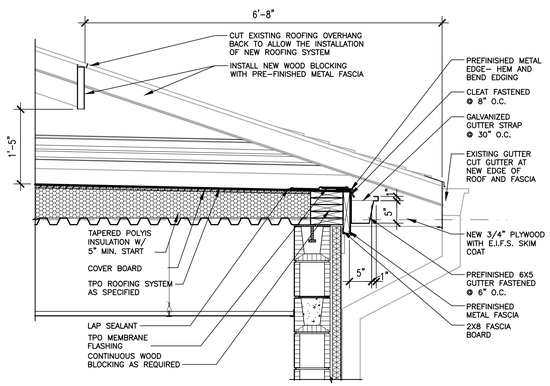

6 ROOF SECTION

SCALE: 3/4" = 1'-0"

LATHAN ARCHITECTS

CLASSROOM ADDITION FOR
MARGARET ELEMENTARY SCHOOL
680 COUNTY ROAD 12, ODENVILLE, ALABAMA 35120
ST. CLAIR COUNTY BOARD OF EDUCATION

STATE OF ALABAMA
No. 3365
RICK N. LATHAN
REGISTERED ARCHITECT

SHEET TITLE:
ROOF DETAILS

PROJ. MGR.: S. WILSON
DRAWN: S.W.
Rasco
DATE: JANUARY 11, 2024
REVISIONS

JOB NO. 23-41
SHEET NO:
A2.3
4 OF 14

0 1" 2"

WINDOW LEGEND	
DHAW	PRE-FINISHED DOUBLE HUNG ALUMINUM CLAD WINDOW SYSTEM
TSG	1" TINTED INSULATED LOW-E TEMPERED SAFETY GLASS AS SPEC.

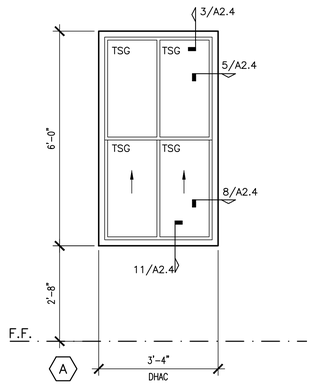

1 STOREFRONT AND WINDOW SCHEDULE
SCALE: 1/2" = 1'-0"

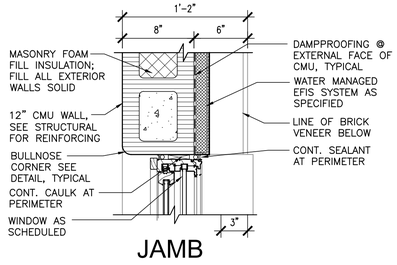

JAMB

2 WINDOW DETAILS
SCALE: 1-1/2" = 1'-0"

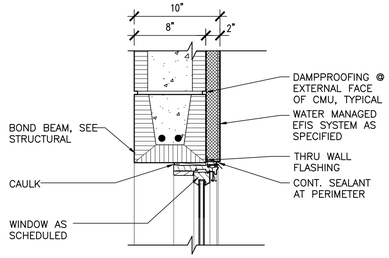

3 WINDOW DETAILS
SCALE: 1-1/2" = 1'-0"

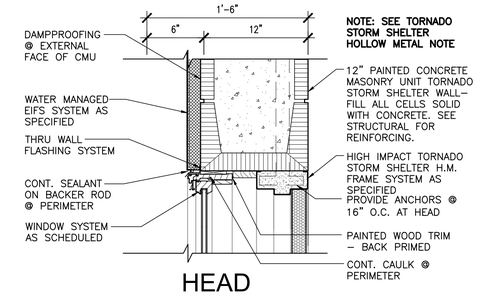

HEAD

4 WINDOW DETAILS
SCALE: 1-1/2" = 1'-0"

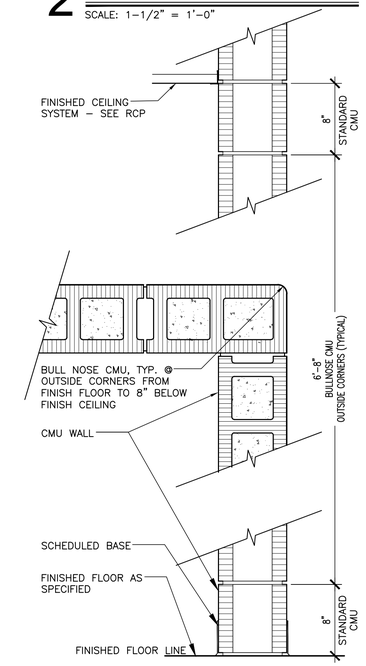

7 DETAIL @ CMU BULL NOSE EDGE
SCALE: 1-1/2" = 1'-0"

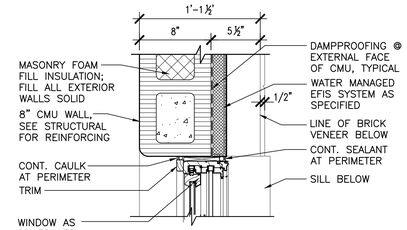

JAMB

5 WINDOW DETAILS
SCALE: 1-1/2" = 1'-0"

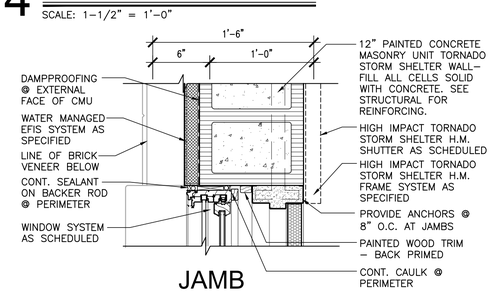

JAMB

6 WINDOW DETAILS
SCALE: 1-1/2" = 1'-0"

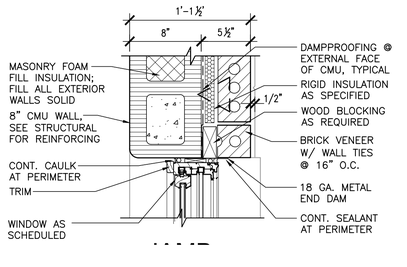

8 WINDOW DETAILS
SCALE: 1-1/2" = 1'-0"

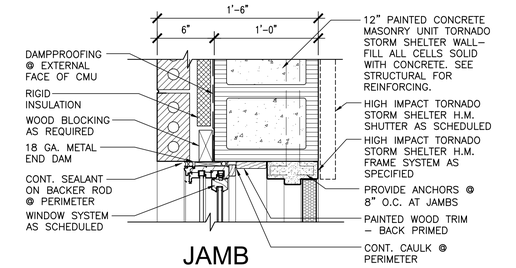

JAMB

9 WINDOW DETAILS
SCALE: 1-1/2" = 1'-0"

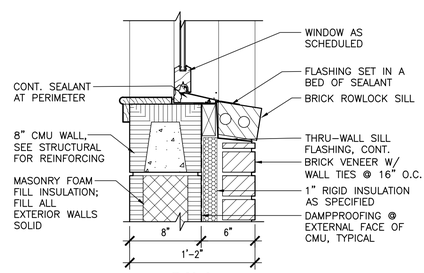

11 WINDOW DETAILS
SCALE: 1-1/2" = 1'-0"

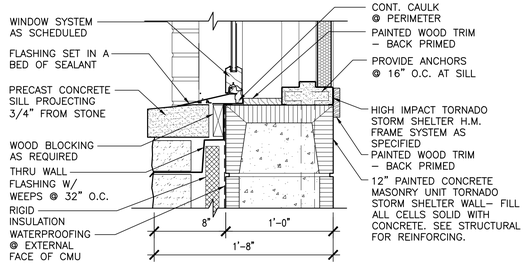

12 WINDOW DETAILS
SCALE: 1-1/2" = 1'-0"

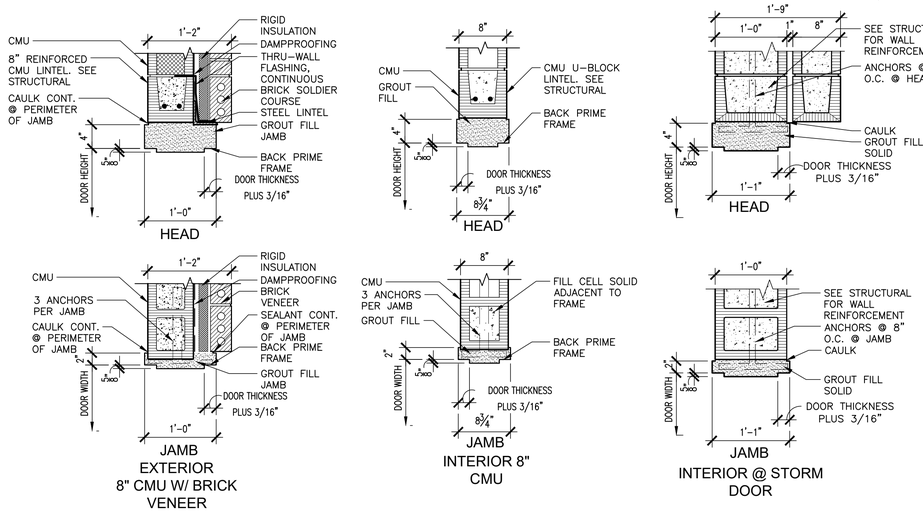

10 HOLLOW METAL FRAME DETAILS
SCALE: 1" = 1'-0"

NOTE: SEE STRUCTURAL FOR TORNADO STORM SHELTER CMU AND REINFORCING INFORMATION. DOORS AND FRAMES MUST HAVE BOTH THE FEMA 361/ICC-500 2020 LABEL AND THE 90 MIN. FIRE LABEL AS SPECIFIED. MEET ALL TORNADO STORM SHELTER DOOR AND FRAME REQUIREMENTS AS INDICATED IN THE SPECIFICATIONS AND ISS-500 2020. BOLTING THE FRAMES TO THE CMU WALLS AND HEAD METHOD IS NOT PERMITTED. PROVIDE MASONRY TEE ANCHORS AT EACH COURSE VERTICALLY AND HORIZONTALLY.

LATHAN ARCHITECTS

CLASSROOM ADDITION FOR
MARGARET ELEMENTARY SCHOOL
680 COUNTY ROAD 12, ODENVILLE, ALABAMA 35120
ST. CLAIR COUNTY BOARD OF EDUCATION

STATE OF ALABAMA
No. 3365
RICK N. LATHAN
REGISTERED ARCHITECT

SHEET TITLE:
WINDOW SCHEDULE AND DETAILS

PROJ. MGR.: S. WILSON
DRAWN: S.W.
CHK'D: RNL
DATE: JANUARY 11, 2024
REVISIONS

JOB NO. 23-41
SHEET NO:
A2.4
5 OF 14

0 1" 2"

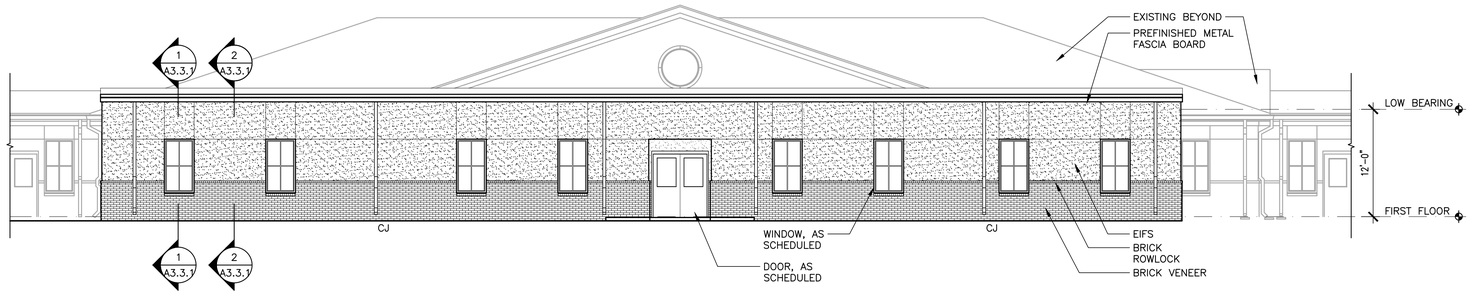

A ELEVATION

SCALE: 1/8" = 1'-0"

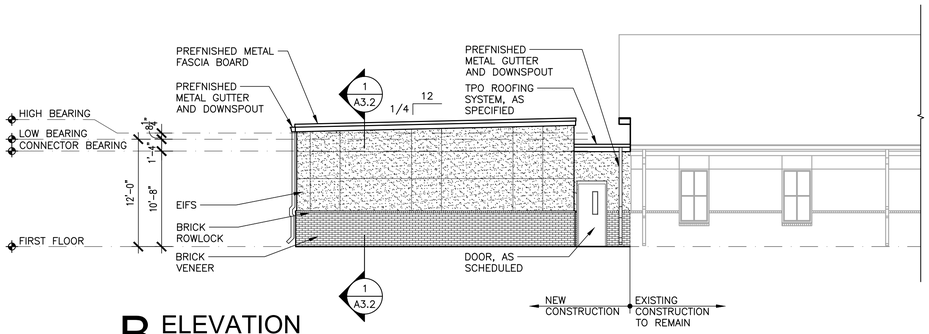

B ELEVATION

SCALE: 1/8" = 1'-0"

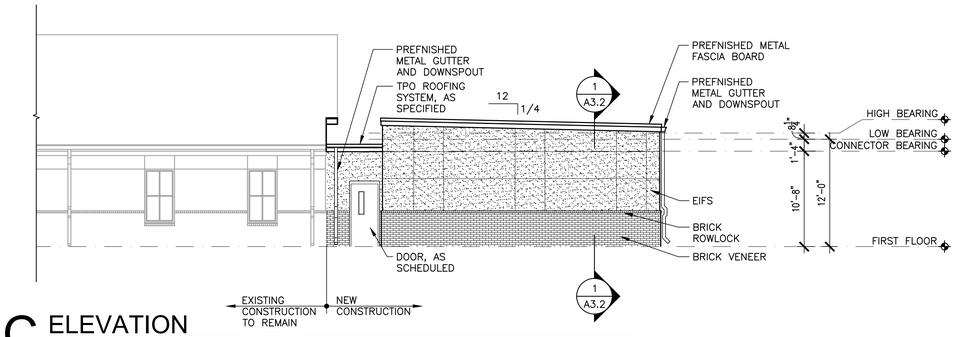

C ELEVATION

SCALE: 1/8" = 1'-0"

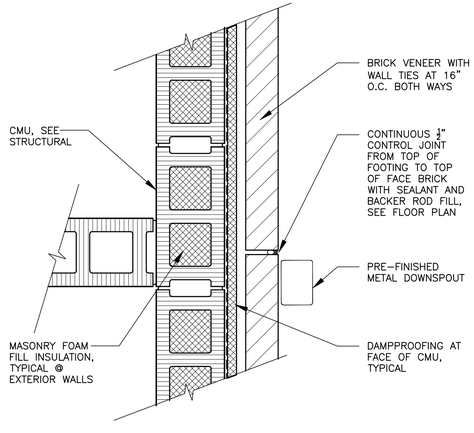

1 DETAIL @ CONTROL JOINT

SCALE: 1 1/2" = 1'-0"

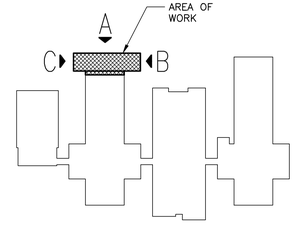

KEY PLAN

NTS

LATHAN ARCHITECTS

CLASSROOM ADDITION FOR
MARGARET ELEMENTARY SCHOOL
680 COUNTY ROAD 12, ODENVILLE, ALABAMA 35120
ST. CLAIR COUNTY BOARD OF EDUCATION

STATE OF ALABAMA
No. 3365
RICK N. LATHAN
REGISTERED ARCHITECT

SHEET TITLE:
BUILDING ELEVATIONS

PROJ. MGR.: S. WILSON
DRAWN: S.W.
Rasco
DATE: JANUARY 11, 2024
REVISIONS

JOB NO. 23-41
SHEET NO:
A3.1
6 OF 14

0 1" 2"

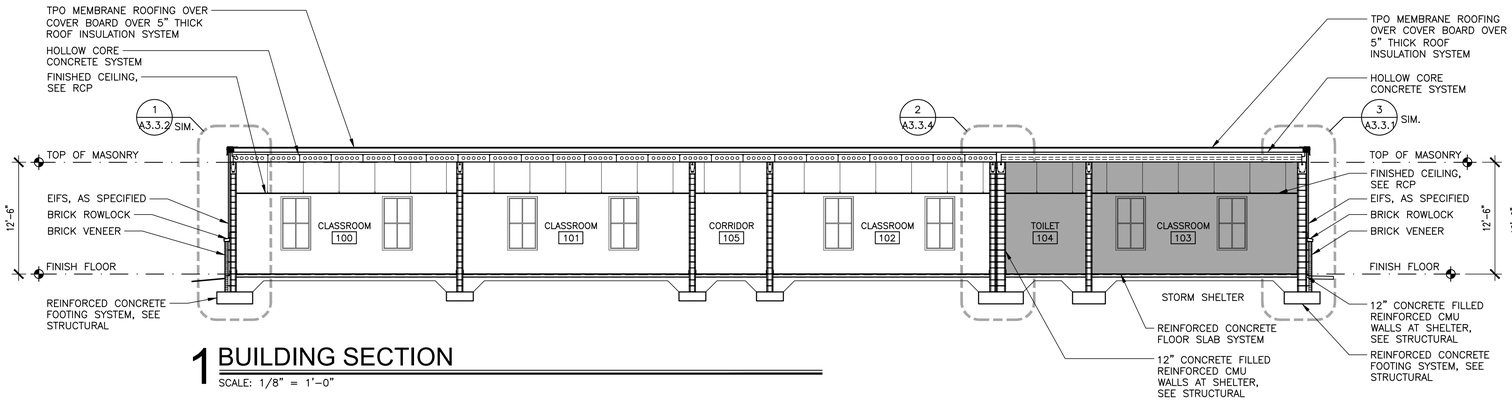

1 BUILDING SECTION

SCALE: 1/8" = 1'–0"

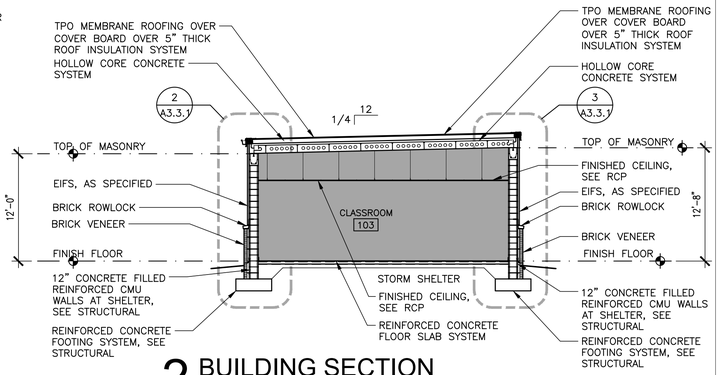

2 BUILDING SECTION

SCALE: 1/8" = 1'–0"

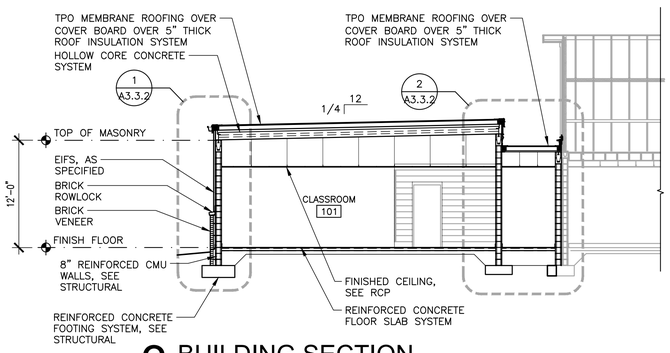

3 BUILDING SECTION

SCALE: 1/8" = 1'–0"

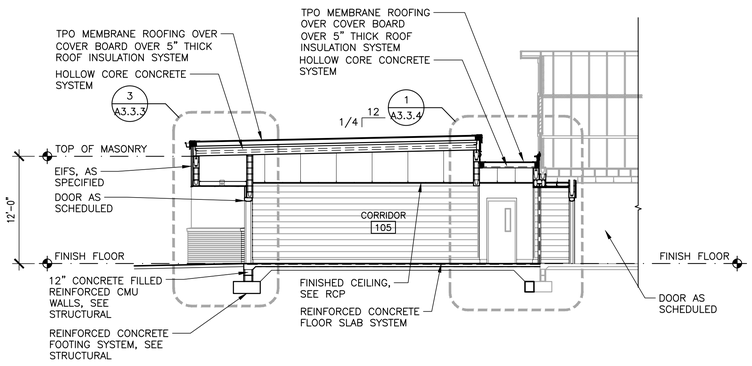

4 BUILDING SECTION

SCALE: 1/8" = 1'–0"

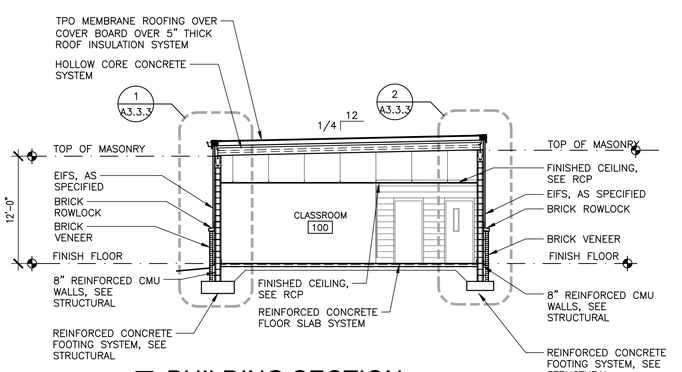

5 BUILDING SECTION

SCALE: 1/8" = 1'–0"

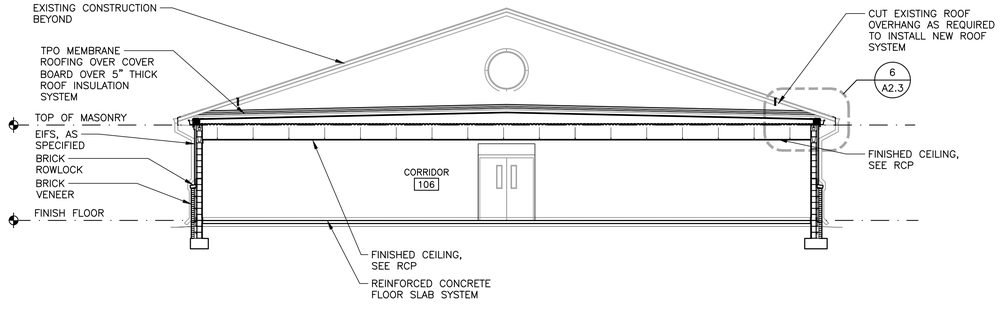

6 BUILDING SECTION

SCALE: 1/8" = 1'–0"

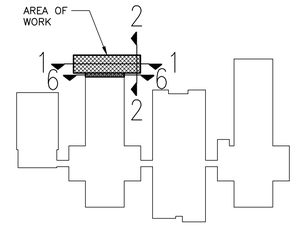

KEY PLAN

NTS

LATHAN ARCHITECTS

CLASSROOM ADDITION FOR
MARGARET ELEMENTARY SCHOOL
680 COUNTY ROAD 12, ODENVILLE, ALABAMA 35120
ST. CLAIR COUNTY BOARD OF EDUCATION

STATE OF ALABAMA
No. 3365
RICK N. LATHAN
REGISTERED ARCHITECT

SHEET TITLE:
BUILDING SECTIONS

PROJ. MGR.: S. WILSON
DRAWN: K. RENTA
Rasco
DATE: JANUARY 11, 2024
REVISIONS

JOB NO. 23-41
SHEET NO:
A3.2
7 OF 14

0 1" 2"

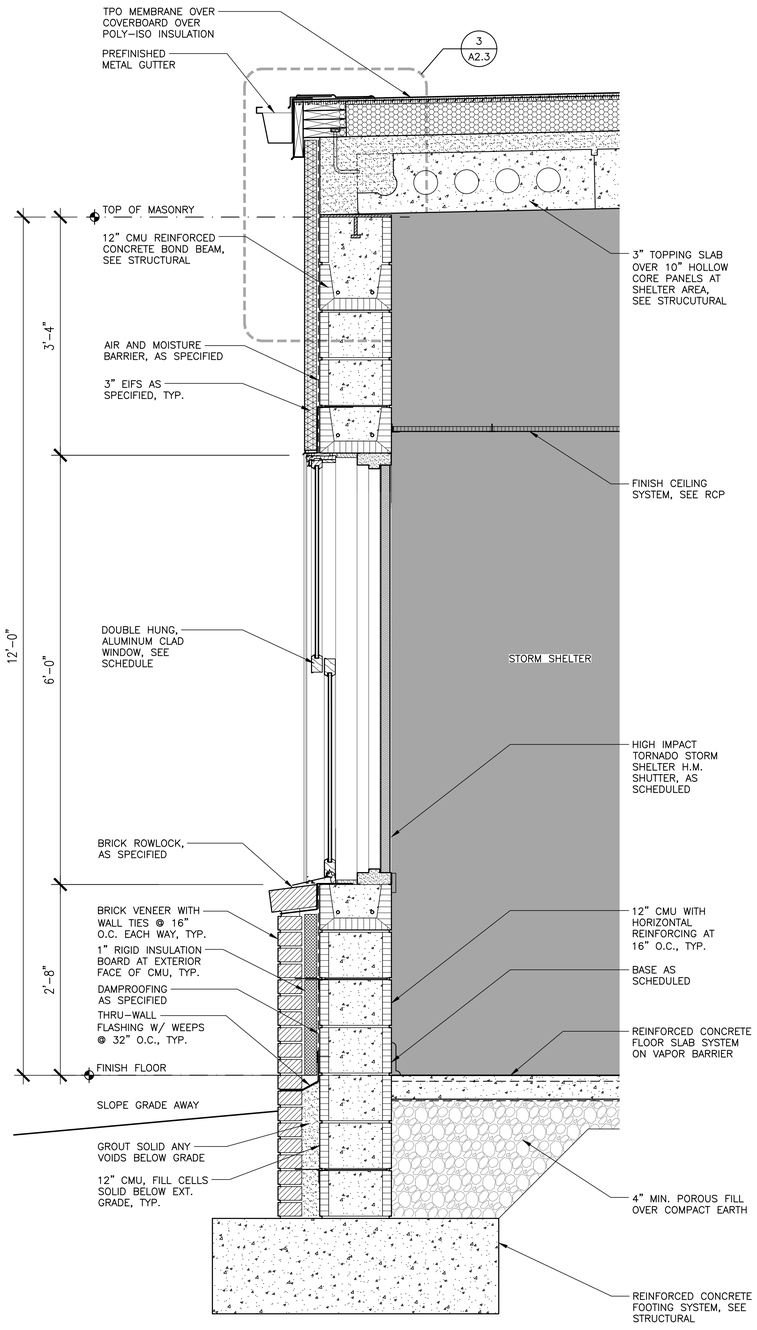

1 ELEVATION

SCALE: 1" = 1'–0"

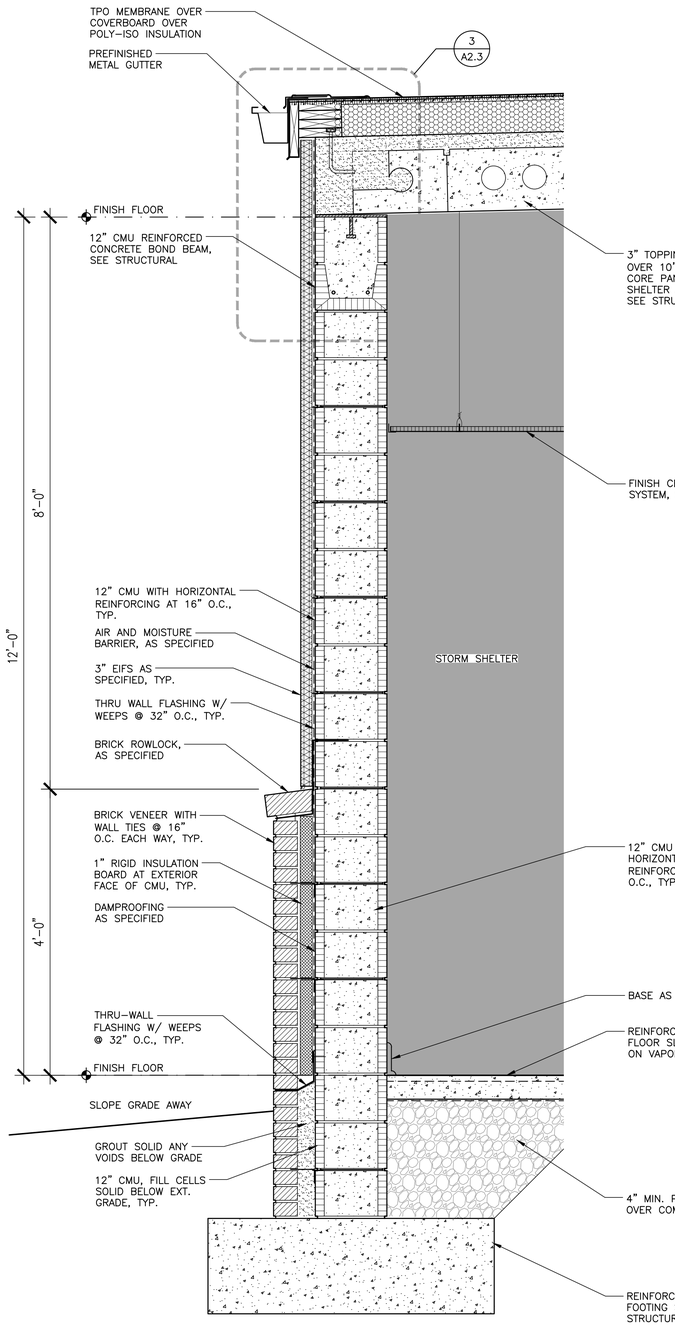

2 ELEVATION

SCALE: 1" = 1'–0"

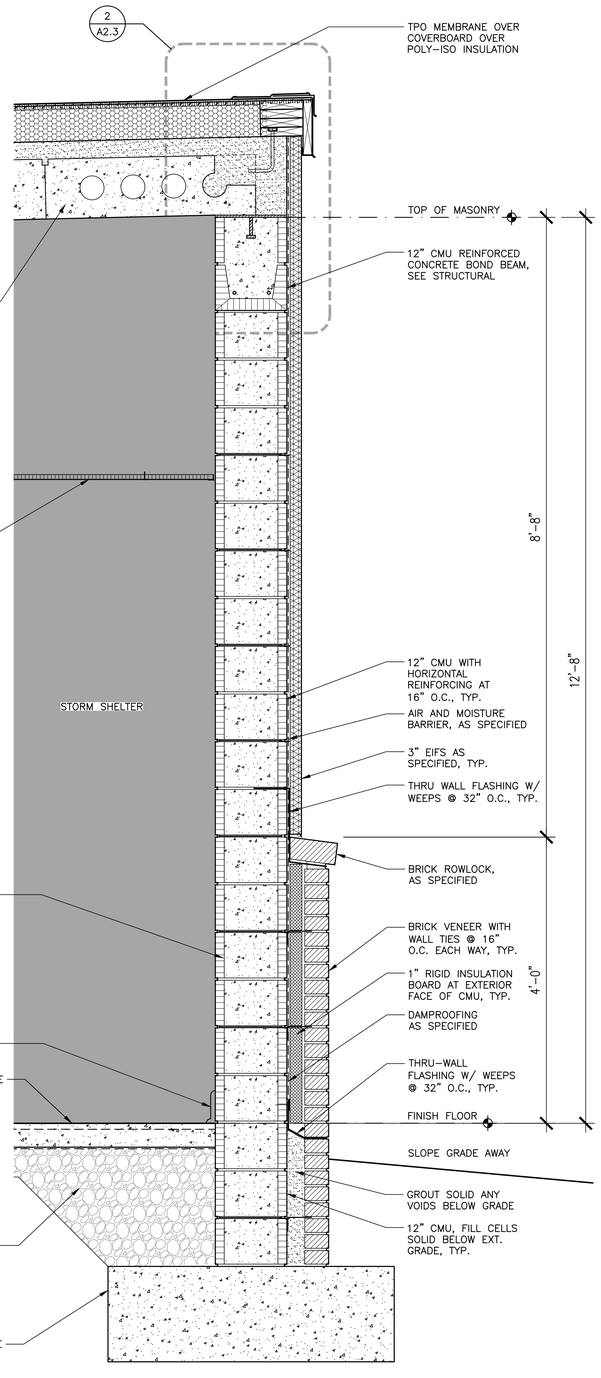

3 ELEVATION

SCALE: 1" = 1'–0"

LATHAN
ARCHITECTS

CLASSROOM ADDITION FOR
MARGARET ELEMENTARY SCHOOL
680 COUNTY ROAD 12, ODENVILLE, ALABAMA 35120
ST. CLAIR COUNTY BOARD OF EDUCATION

STATE OF ALABAMA
No. 3365
RICK N. LATHAN
REGISTERED ARCHITECT

SHEET TITLE:
WALL SECTIONS

PROJ. MGR.: S. WILSON
DRAWN: K. RENTA
Rasco
DATE: JANUARY 11, 2024
REVISIONS

JOB NO. 23-41
SHEET NO:
A3.3.1
8 OF 14

0 1" 2"

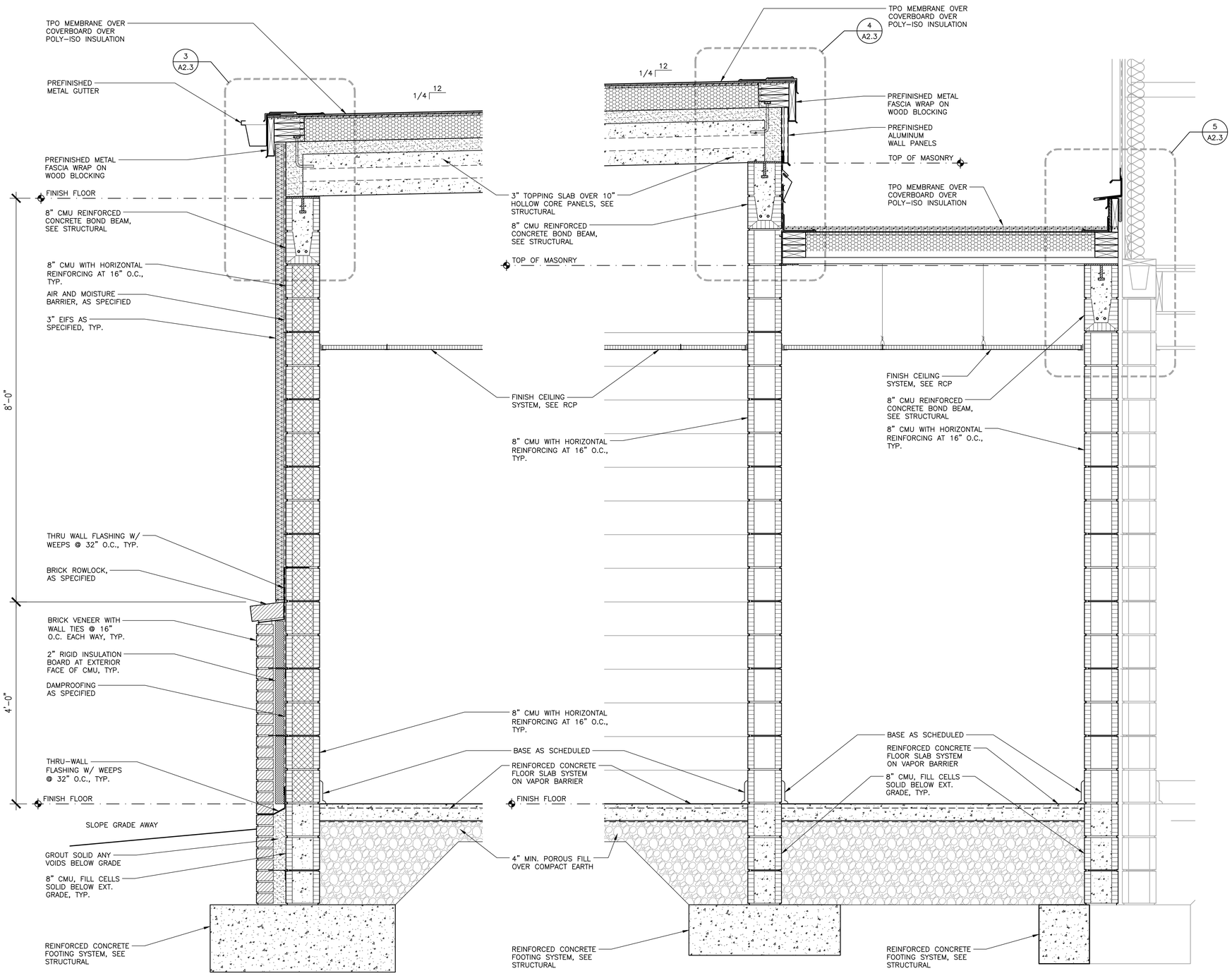

1 ELEVATION
SCALE: 1" = 1'–0"

2 ELEVATION
SCALE: 1" = 1'–0"

LATHAN ARCHITECTS

CLASSROOM ADDITION FOR
MARGARET ELEMENTARY SCHOOL
680 COUNTY ROAD 12, ODENVILLE, ALABAMA 35120
ST. CLAIR COUNTY BOARD OF EDUCATION

STATE OF ALABAMA
No. 3365
RICK N. LATHAN
REGISTERED ARCHITECT

SHEET TITLE:
WALL SECTIONS

PROJ. MGR.: S. WILSON
DRAWN: K. RENTA
Rasco
DATE: JANUARY 11, 2024
REVISIONS

JOB NO. 23-41
SHEET NO:
A3.3.2
9 OF 14

0 1" 2"

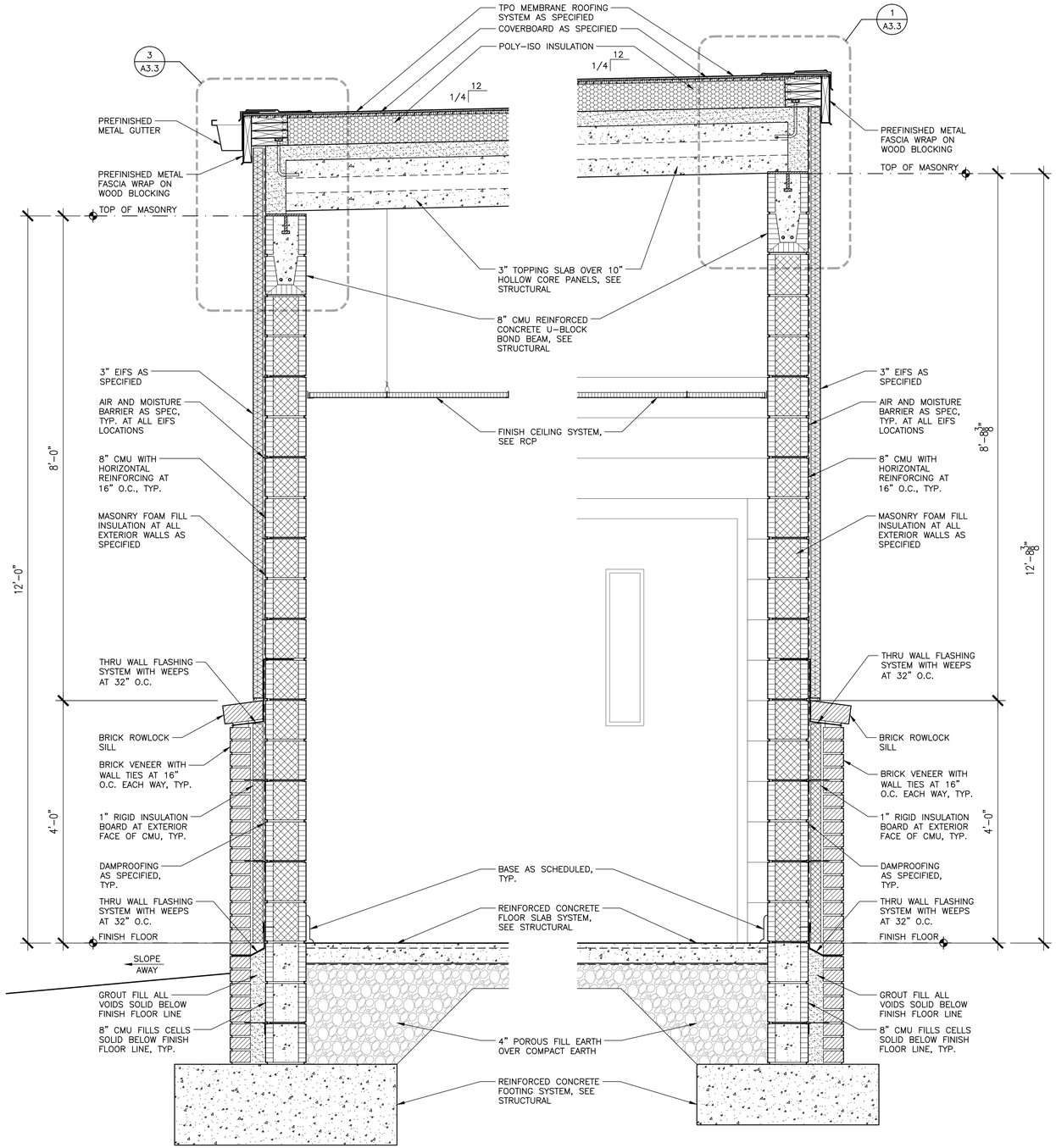

1 WALL SECTION

SCALE: 1" = 1'-0"

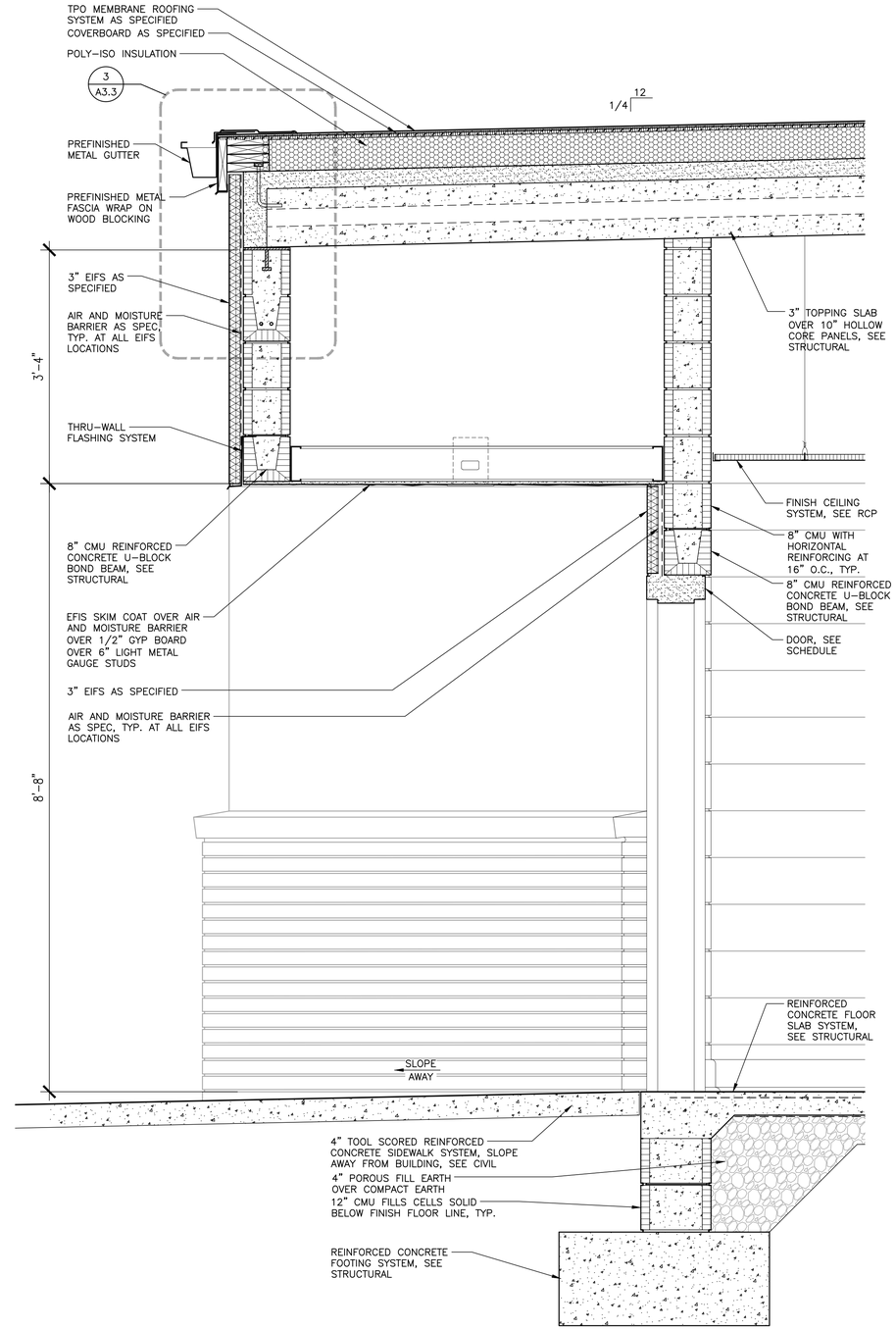

2 WALL SECTION

SCALE: 1" = 1'-0"

3 WALL SECTION

SCALE: 1" = 1'-0"

LATHAN ARCHITECTS

CLASSROOM ADDITION FOR
MARGARET ELEMENTARY SCHOOL
680 COUNTY ROAD 12, ODENVILLE, ALABAMA 35120
ST. CLAIR COUNTY BOARD OF EDUCATION

STATE OF ALABAMA
No. 3365
RICK N. LATHAN
REGISTERED ARCHITECT

SHEET TITLE:
WALL SECTIONS

PROJ. MGR.: S. WILSON
DRAWN: K. RENTA
Rasco
DATE: JANUARY 11, 2024
REVISIONS

JOB NO. 23-41
SHEET NO:
A3.3.3
10 OF 14

0 1" 2"

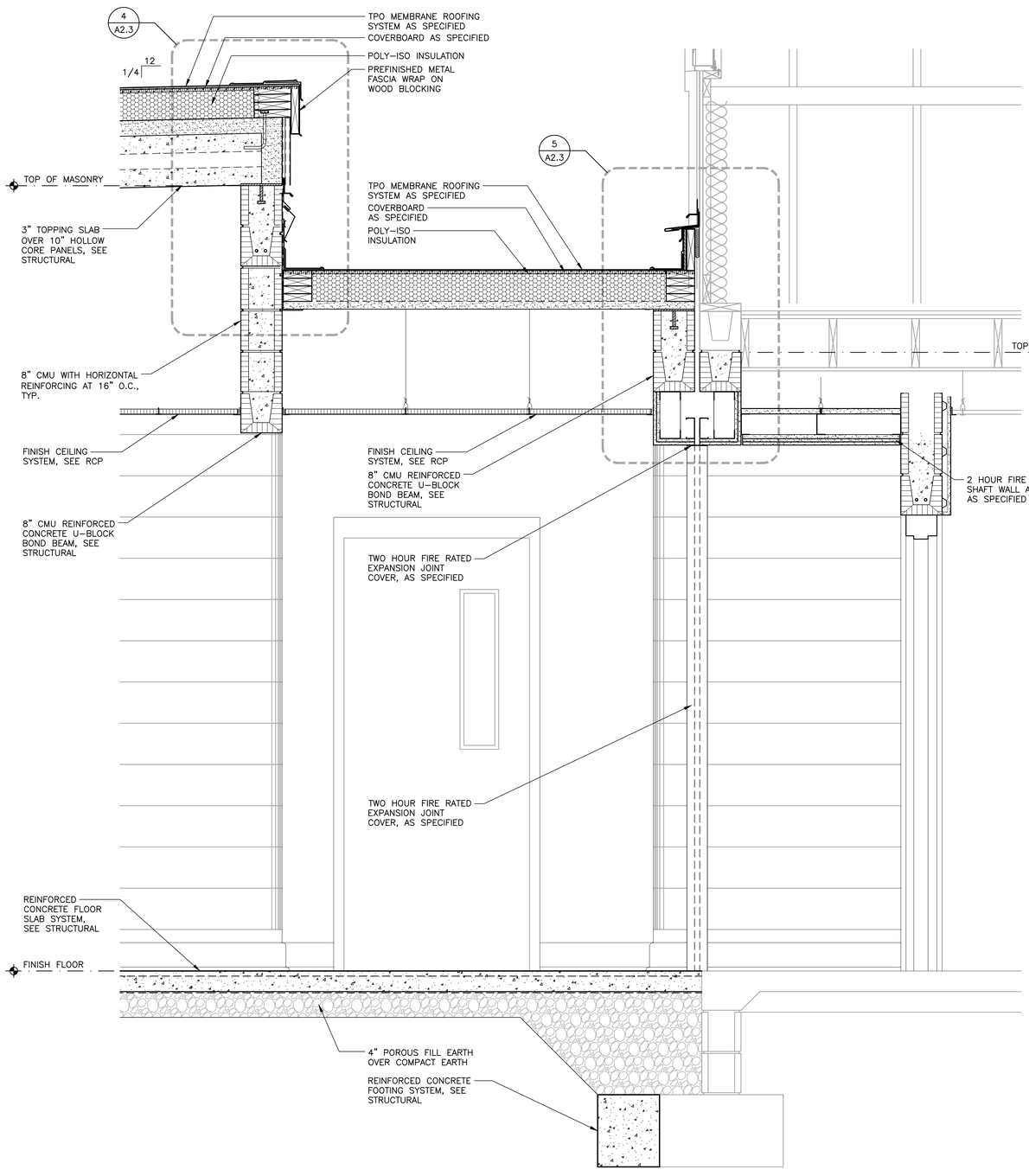

1 WALL SECTION

SCALE: 1" = 1'-0"

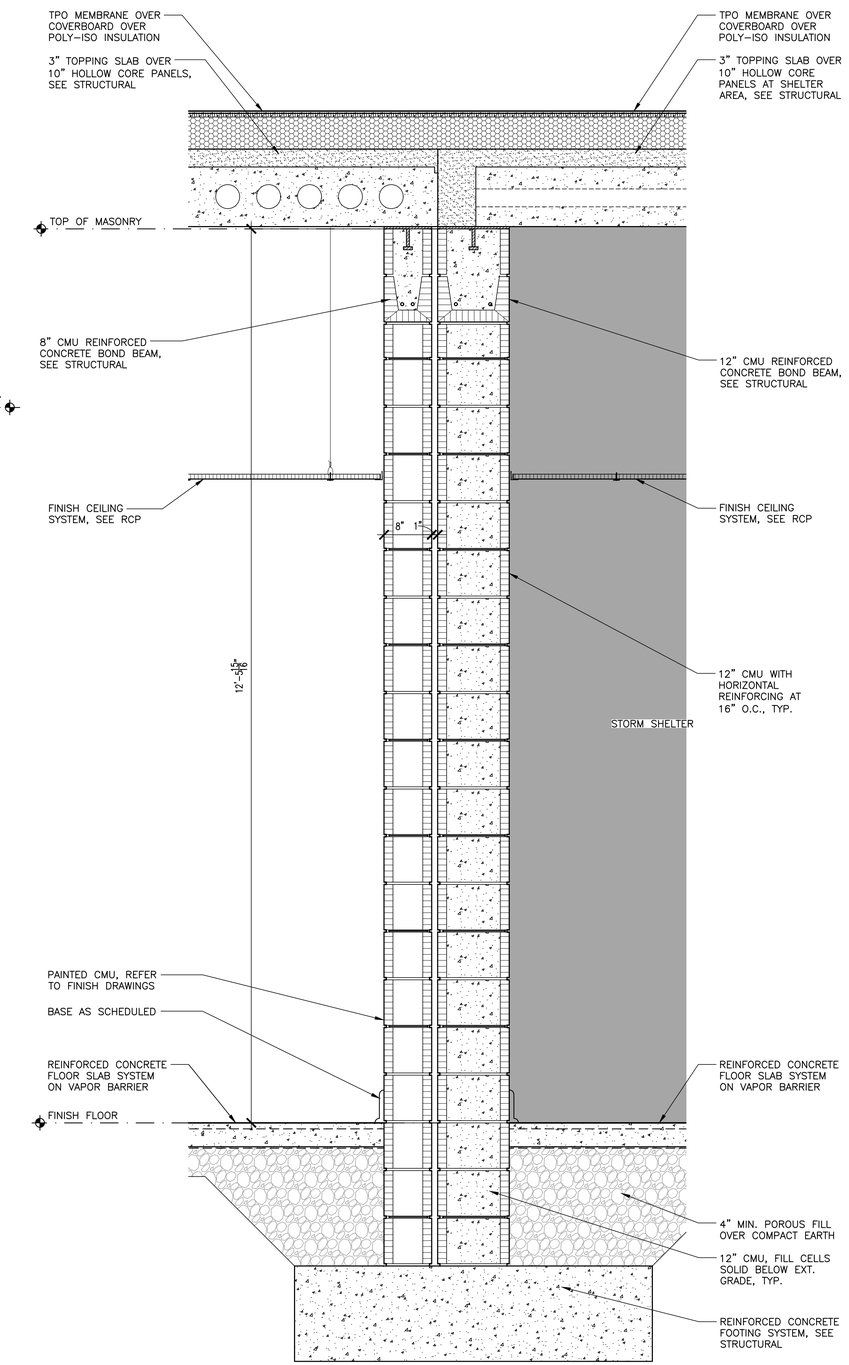

2 ELEVATION

SCALE: 1" = 1'-0"

LATHAN ARCHITECTS

CLASSROOM ADDITION FOR
MARGARET ELEMENTARY SCHOOL
680 COUNTY ROAD 12, ODENVILLE, ALABAMA 35120
ST. CLAIR COUNTY BOARD OF EDUCATION

STATE OF ALABAMA
No. 3365
RICK N. LATHAN
REGISTERED ARCHITECT

SHEET TITLE:
WALL SECTIONS

PROJ. MGR.: S. WILSON
DRAWN: K. RENTA
Rasco
DATE: JANUARY 11, 2024
REVISIONS

JOB NO. 23-41
SHEET NO:
A3.3.4
11 OF 14

0 1" 2"

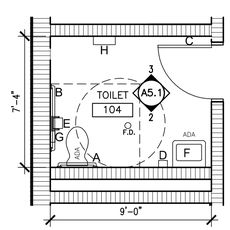

TOILET ACCESSORY LEGEND	
A	36" S.S. GRAB BAR
B	42" S.S. GRAB BAR
C	COAT HOOK (MOUNTED TO INSIDE OF DOOR
D	SOAP DISPENSER (OWNER PROVIDED CONTRACTOR INSTALLED)
E	TOILET TISSUE DISPENSER (OWNER PROVIDED CONTRACTOR INSTALLED)
F	FRAMED MIRROR 18" X 30"
G	FEMININE NAPKIN DISPOSAL
H	ELECTRIC HAND DRYER (OWNER PROVIDED, CONTRACTOR INSTALLED)

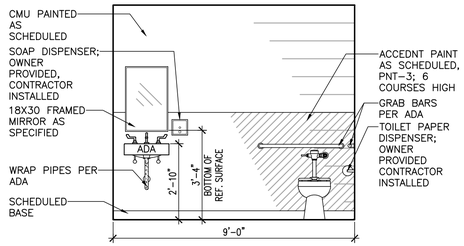

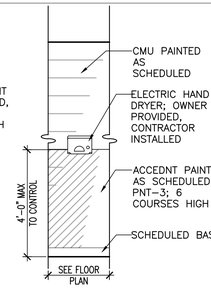

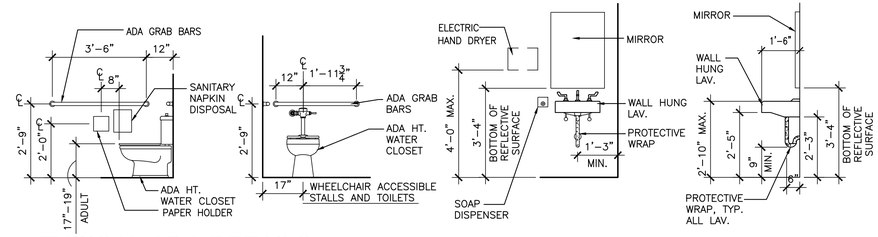

1 ENLARGED TOILET PLAN @ TOILET 104
1/4" = 1'-0"

2 INTERIOR ELEV. @ TOILET 104
3/8" = 1'-0"

3 INTERIOR ELEV. @ TOILET 104
3/8" = 1'-0"

TYPICAL ADA DETAILS
3/8" = 1'-0"

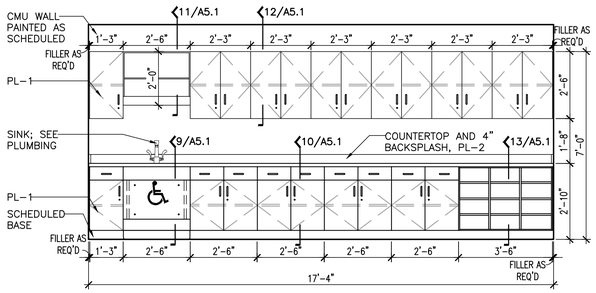

4 INTERIOR ELEVATION @ CLASSROOM 100 (O.H.), CLASSROOM 101, AND CLASSROOM 102 (O.H.)
3/8" = 1'-0"

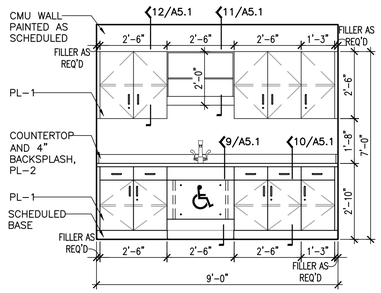

5 INTERIOR ELEVATION @ STORAGE 103A
3/8" = 1'-0"

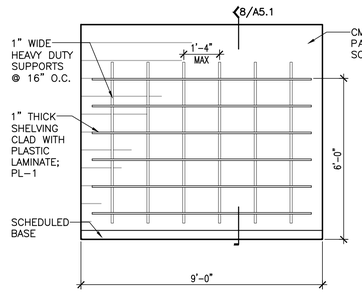

6 INTERIOR ELEVATION @ STORAGE 103A
3/8" = 1'-0"

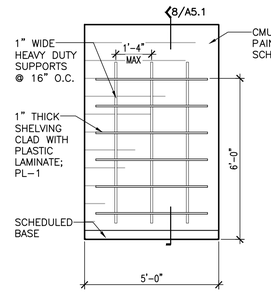

7 INTERIOR ELEV. @ STORAGE 100A, STORAGE 101A, AND STORAGE 102A
3/8" = 1'-0"

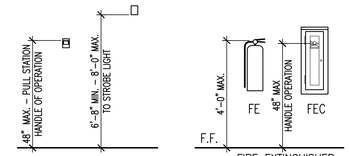

FIRE EQUIPMENT MOUNTING HEIGHTS

FIRE EXTINGUISHER MOUNTING HEIGHTS

NOTE:
1. 4" MAX. PROJECTION FROM WALL
2. MEASURE FROM HANDLE OF EXTINGUISHER NOT CABINET HANDLE

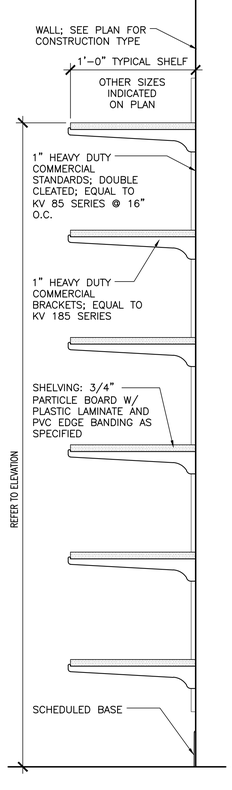

8 DETAIL @ ADJ. SHELVING
1 1/2" = 1'-0"

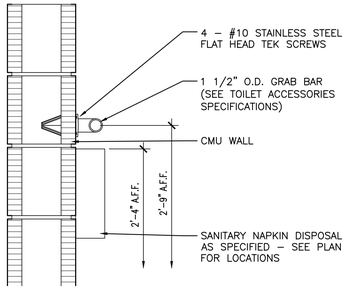

14 DETAIL @ GRAB BAR AT CMU WALL
1 1/2" = 1'-0"

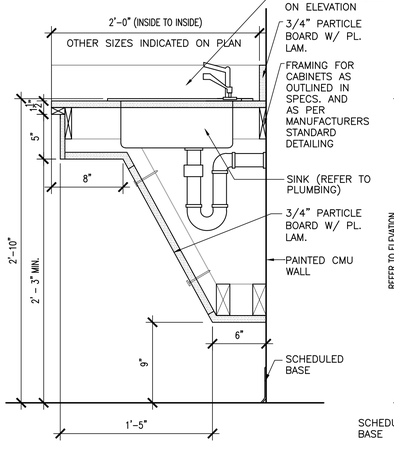

9 DETAIL @ ADA SINK BASE
1 1/2" = 1'-0"

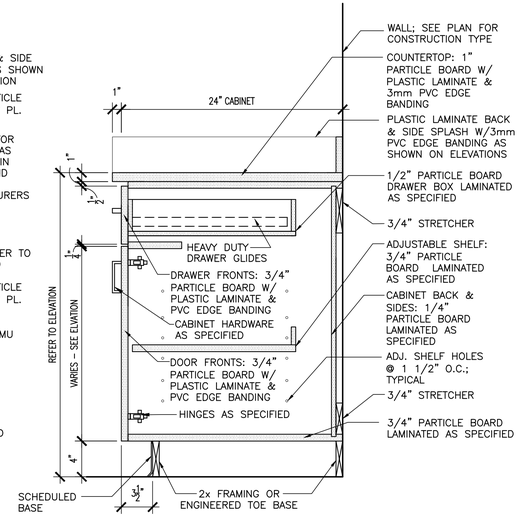

10 DETAIL @ TYPICAL BASE CABINET
1 1/2" = 1'-0"

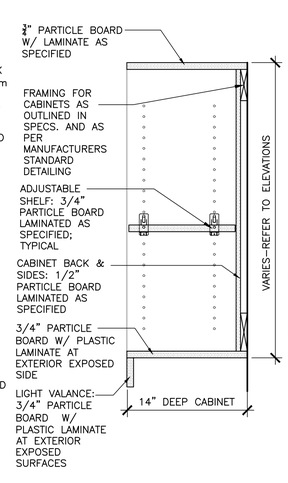

11 DETAIL @ OPENED UPPER CABINET
1 1/2" = 1'-0"

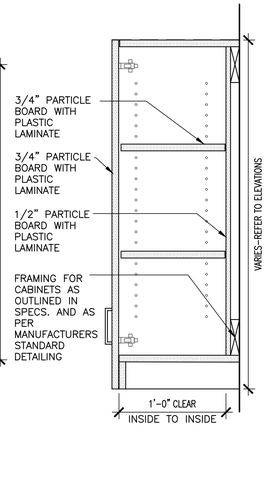

12 DETAIL @ TYPICAL UPPER CABINET
1 1/2" = 1'-0"

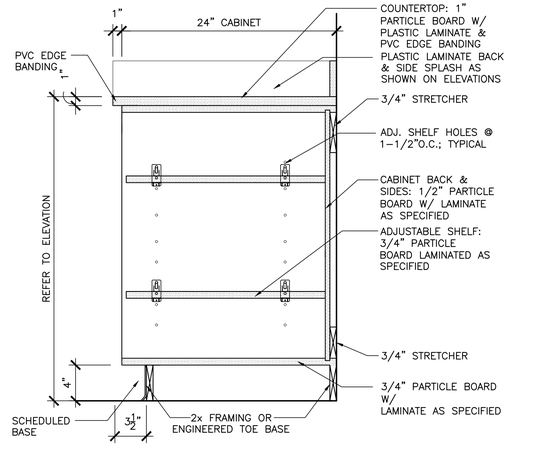

13 DETAIL @ OPEN CABINET BASE W/ ADJUSTABLE SHELVING
1 1/2" = 1'-0"

LATHAN ARCHITECTS

CLASSROOM ADDITION FOR
MARGARET ELEMENTARY SCHOOL
680 COUNTY ROAD 12, ODENVILLE, ALABAMA 35120
ST. CLAIR COUNTY BOARD OF EDUCATION

STATE OF ALABAMA
No. 3365
RICK N. LATHAN
REGISTERED ARCHITECT

SHEET TITLE:
ENLARGED TOILET PLANS, LEGEND, INTERIOR ELEVATIONS AND DETAILS

PROJ. MGR.: S. WILSON
DRAWN: K. JOINER
Rasco
DATE: JANUARY 11, 2024
REVISIONS

JOB NO. 23-41
SHEET NO:
A5.1
12 OF 14

0 1" 2"

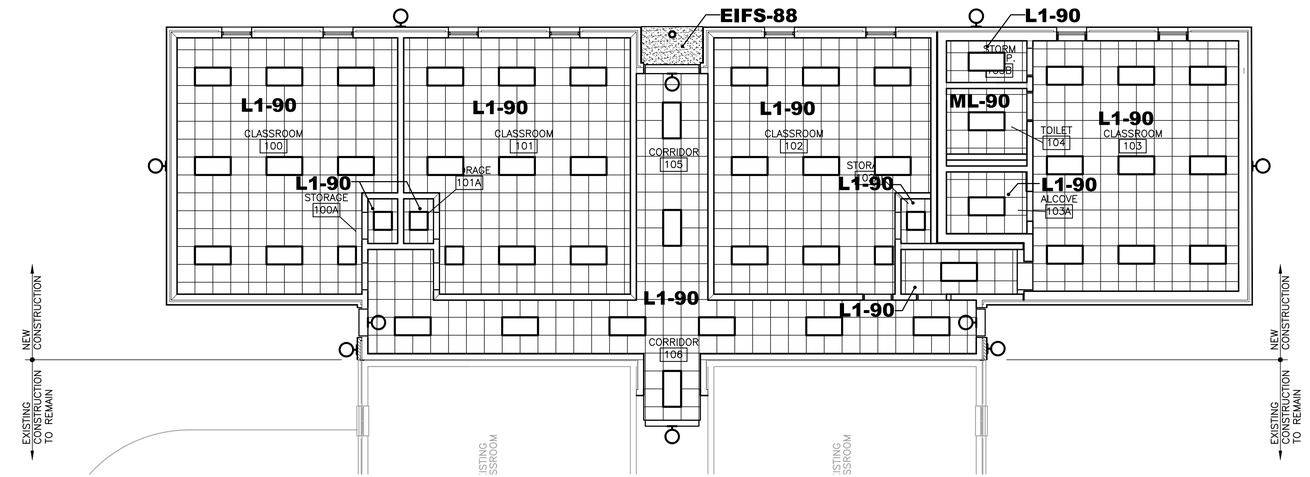

1 REFLECTED CEILING PLAN

SCALE: 1/8" = 1'-0"

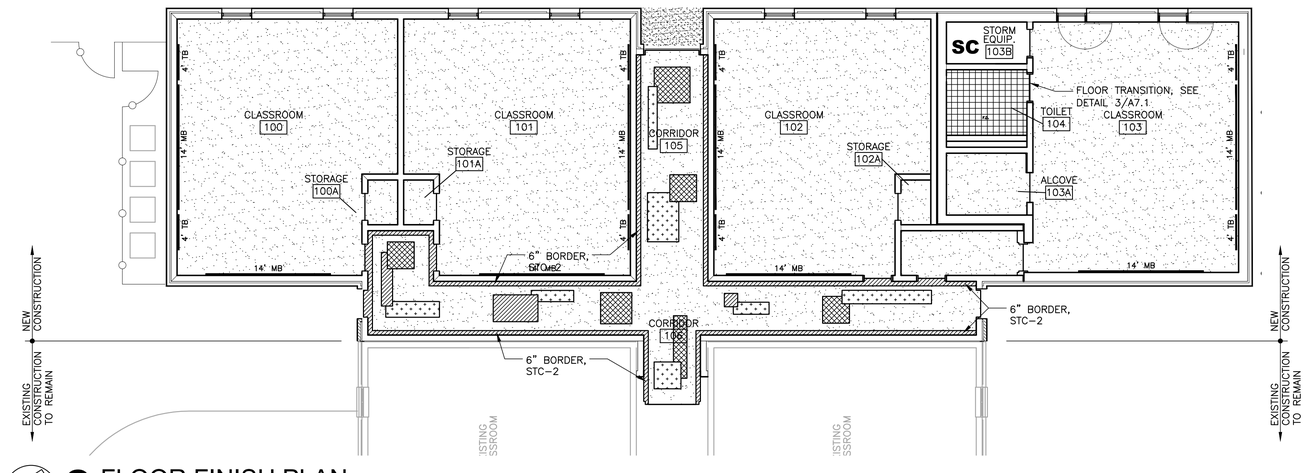

2 FLOOR FINISH PLAN

SCALE: 1/8" = 1'-0"

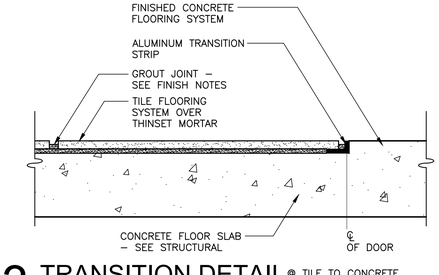

3 TRANSITION DETAIL @ TILE TO CONCRETE

NOT TO SCALE

CEILING NOTES

1. ALL RATED GYPSUM BOARD CEILINGS TO BE TYPE "X" FIRE RATED GYPSUM BOARD. ALL GYPSUM BOARD WITHIN GYMNASIUM TO BE IMPACT RESISTANT
3. AFF - ABOVE FINISHED FLOOR
4. ALL CEILING HEIGHTS INDICATED ARE FROM ADJACENT FINISHED FLOOR.
5. REFER TO ELECTRICAL DRAWINGS FOR FIXTURE TYPES.
6. ALL AREAS INDICATING NEW CEILING TO IMPLY DEMOLITION OF EXISTING CEILING SYSTEMS AS REQD THAT AREA.
7. ALL CEILING GRIDS ARE CENTERED IN ROOMS UNLESS NOTED OTHERWISE.

CEILING LEGEND

FIXTURE TYPES - SEE ELECTRICAL

CEILING TYPE	CEILING HEIGHTS
L1 - 2 x 2 LAY-IN ACOUSTICAL CEILING TILE, AS SPECIFIED	88 = 8'-8"
ML - 2 x 2 MOISTURE RESISTANT LAY-IN, AS SPECIFIED	90 = 9'-0"
EIFS - EXTERIOR INSULATED FINISHED SYSTEM, PAINTED	
REFER TO FINISH SYMBOLS ON PLAN FOR MATERIALS AND CEILING HEIGHTS	

CEILING TYPE — GB–90 — CEILING HEIGHT

FINISH PATTERN LEGEND

- STC–1 STAINED CONCRETE
- STC–2 STAINED CONCRETE
- STC–3 STAINED CONCRETE
- STC–4 STAINED CONCRETE
- SC SEALED CONCRETE
- PFT–1 PORCELAIN FLOOR TILE

BASE(RUBBER/PORCELAIN)

ITEM	MANUFACTURER	ITEM NUMBER/NAME	LOCATION
RB–1	TARKETT	6" RUBBER BASE COLOR: 40 BLACK	SEE FINISH SCHEDULE
PTB–1	MATCH TO PFT–1	MATCH TO PFT–1	TOILET 104

CONCRETE

ITEM	MANUFACTURER	ITEM NUMBER/NAME	LOCATION
STC–1	AMERIPOLISH	COLOR: NATURAL	SEE FINISH SCHEDULE
STC–2	AMERIPOLISH	COLOR: BLACK	CORRIDOR 105 AND CORRIDOR 106
STC–3	AMERIPOLISH	COLOR: RED	CORRIDOR 105 AND CORRIDOR 106
STC–4	AMERIPOLISH	COLOR: LIGHT GRAY	CORRIDOR 105 AND CORRIDOR 106
SC	SHERWIN WILLIAMS	SEE SPEC	STORM EQUIPMENT 103B

PORCELAIN TILE

ITEM	MANUFACTURER	ITEM NUMBER/NAME	TYPE/LOCATION
PFT–1	AMERICAN OLEAN	UNGLAZED MOSAICS 2"x 2" COLOR: A91 WILLOW	TOILET 104

FINISH ABBREVIATION LEGEND

APF	ACOUSTIC PANEL FABRIC	PL	PLASTIC LAMINATE	ST	STAIN
CC	COATED CONCRETE	PM	PANEL MOULDING	TP	TACKABLE ACOUSTIC PANEL
CM	CROWN MOLDING	PNT	PAINT		TACBABLE SURFACE
CPT	CARPET	PFT	PORCELAIN FLOOR TILE	TS	VINYL COMP. TILE
CR	CHAIR RAIL	PTB	PORCELAIN TILE BASE	LVT	WOOD BASE
CWT	CERAMIC WALL TILE	PWB	PAINTED WOOD BASE	WB	WALLCOVERING
ERB	EPOXY RESIN BASE	QT	QUARRY TILE	WC	WOOD FLOORING
ERF	EPOXY RESIN FLOOR	QTB	QUARRY TILE BASE	WF	WOOD PANELING
ESD	STATIC CONTROL TILE	RB	RUBBER BASE	WP	WOOD VENEER
GYP	GYPSUM BOARD	RF	RUBBER FLOOR	WV	
IC	IMPRINTED CONCRETE	SC	SEALED CONCRETE		
LVT	LUXURY VINYL TILE	STC	STAINED CONCRETE		
		SS	SOLID SURFACE		

PAINT

ITEM	MANUFACTURER	ITEM NUMBER/NAME	TYPE/LOCATION
PNT–1	SHERWIN WILLIAMS	COLOR:SW 7050 USEFUL GRAY	GENERAL WALLS EPOXY AT WET AREAS
PNT–2	SHERWIN WILLIAMS	COLOR: SW 7046 ANONYMOUS	GENERAL TRIM

PLASTIC LAMINATE

ITEM	MANUFACTURER	ITEM NUMBER/NAME	TYPE/LOCATION
PL–1	WILSONART	COLOR: SATIN STAINLESS 4830–07	CABINETS
PL–2	FORMICA	COLOR: CHARCOAL BOOMERANG #6942–58	COUNTERTOPS

FINISH NOTES

ALL WALLS TO BE PAINTED PNT -1 UNLESS NOTED OTHERWISE.

ALL WALLS LOCATED IN WET AREAS SHALL HAVE EPOXY BASED PAINT

ALL ROOM NUMBERS SHOULD BE USED FOR CONSTRUCTION PURPOSES ONLY.

FINISH SCHEDULE

ROOM NO.	ROOM NAME	FLOOR	BASE	MILLWORK FACE	MILLWORK TOP	WALLS NORTH	WALLS SOUTH	WALLS EAST	WALLS WEST	DOOR FRAME	CEILING/SOFFIT PAINT	NOTES
100	CLASSROOM	STC-1	RB-1	PL-1	PL-2	PNT-1	PNT-1	PNT-1	PNT-1	PNT-2		
100A	STORAGE	STC-1	RB-1	PL-1	PL-1	PNT-1	PNT-1	PNT-1	PNT-1	PNT-2		
101	CLASSROOM	STC-1	RB-1	PL-1	PL-2	PNT-1	PNT-1	PNT-1	PNT-1	PNT-2		
101A	STORAGE	STC-1	RB-1	PL-1	PL-1	PNT-1	PNT-1	PNT-1	PNT-1	PNT-2		
102	CLASSROOM	STC-1	RB-1	PL-1	PL-2	PNT-1	PNT-1	PNT-1	PNT-1	PNT-2		
102A	STORAGE	STC-1	RB-1	PL-1	PL-1	PNT-1	PNT-1	PNT-1	PNT-1	PNT-2		
103	CLASSROOM	STC-1	RB-1	PL-1	PL-2	PNT-1	PNT-1	PNT-1	PNT-1	PNT-2		
103A	STORAGE	STC-1	RB-1	PL-1	PL-2	PNT-1	PNT-1	PNT-1	PNT-1	PNT-2		
103B	STORM EQUIPMENT	SC	NO BASE	-	-	PNT-1	PNT-1	PNT-1	PNT-1	PNT-2		
104	TOILET	PFT-1	PTB-1	-	-	PNT-1	PNT-1	PNT-1	PNT-1	PNT-2		EPOXY PAINT AT ALL WET WALLS
105	CORRIDOR	STC-1/2/3/4	RB-1	-	-	PNT-1	PNT-1	PNT-1	PNT-1	PNT-2		
106	CORRIDOR	STC-1/2/3/4	RB-1	-	-	PNT-1	PNT-1	PNT-1	PNT-1	PNT-2		

LATHAN ARCHITECTS

CLASSROOM ADDITION FOR
MARGARET ELEMENTARY SCHOOL
680 COUNTY ROAD 12, ODENVILLE, ALABAMA 35120
ST. CLAIR COUNTY BOARD OF EDUCATION

STATE OF ALABAMA
No. 3365
RICK N. LATHAN
REGISTERED ARCHITECT

SHEET TITLE:
REFLECTED CEILING PLAN, FINISH FLOOR PLAN, LEGENDS, DETAILS AND NOTES

PROJ. MGR.: S. WILSON
DRAWN: K. JOINER
Rasco
DATE: JANUARY 11, 2024
REVISIONS

JOB NO. 23-41

SHEET NO:
A7.1
13 OF 14

0 1" 2"

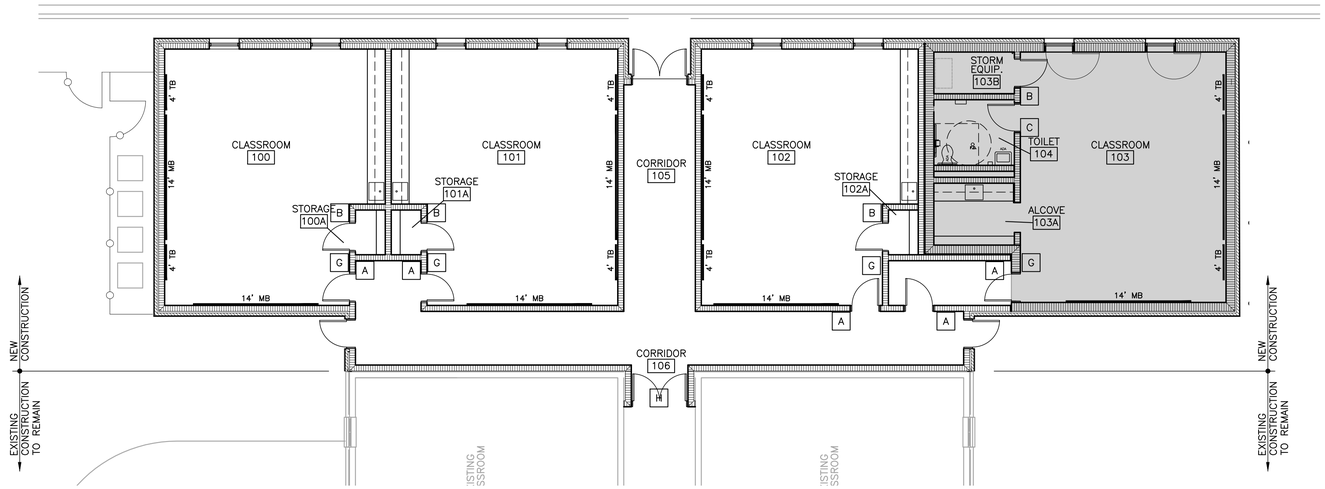

1 ROOM SIGNAGE FLOOR PLAN

SCALE: 1/8" = 1'-0"

INTERIOR SIGNAGE (SIGN TYPE - A)

SCALE: 3" = 1'-0"

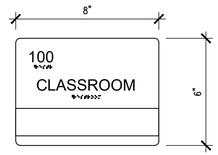

INTERIOR SIGNAGE (SIGN TYPE - B)

SCALE: 3" = 1'-0"

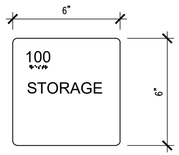

INTERIOR SIGNAGE (SIGN TYPE - C)

SCALE: 3" = 1'-0" 7"



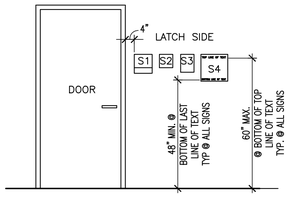

SIGNAGE LEGEND:
A – OFFICES, CLASSROOMS, INSTRUCTIONAL AREAS SIGNAGE
B – OTHER INTERIOR DOOR SIGNAGE
C – RESTROOM SIGNAGE W/ PICTOGRAM
D – EXTERIOR SIGNAGE

NOTE:
1. TYPICAL SIGNAGE LOCATION AND HEIGHTS SHOWN. SEE SPECIFICATIONS FOR SIGN SIZE AND REQUIREMENTS.
2. ALIGN TOP OF ALL SIGNS AS SHOWN, TYPICAL UNLESS OTHERWISE REQUIRED BY THE AMERICANS WITH DISABILITIES ACT.
3. SEE TORNADO SHELTER PLANS FOR SHELTER SIGNAGE IF APPLICABLE.

TYPICAL ADA DETAIL

3/8" = 1'-0"

INTERIOR SIGNAGE (SIGN TYPE - D)

SCALE: 3" = 1'-0"

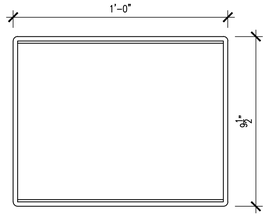

INTERIOR SIGNAGE (SIGN TYPE - E)

SCALE: 3" = 1'-0"

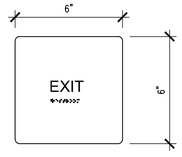

INTERIOR SIGNAGE (SIGN TYPE - F)

SCALE: 3" = 1'-0"



INTERIOR SIGNAGE (SIGN TYPE - G)

SCALE: 3" = 1'-0"

INTERIOR SIGNAGE (SIGN TYPE - H)

SCALE: 3" = 1'-0"

INTERIOR SIGNAGE (SIGN - TYPE J)

SCALE: 3" = 1'-0"

INTERIOR SIGNAGE LEGEND

A	SIGN WITH MESSAGE STRIP (OFFICES/CLASSROOM/INSTRUCTIONAL AREA)
B	ROOM NUMBER AND NAME (STORAGE, ELECTRICAL, ETC)
C	RESTROOM SIGNAGE WITH PICTOGRAM/BRAILLE
D	ELEVATOR SIGNAGE WITH PICTOGRAM/BRAILLE
E	STAIR SIGNAGE WITH PICTOGRAM/BRAILLE
F	AREA OF REFUGE SIGN
G	FRAMED CLEAR VIEW SIGNAGE (8.5X11)
H	TACTILE EXIT SIGN TO EXTERIOR (EXIT)
J	OCCUPANT LOAD SIGN (ASSEMBLY SPACES)

LATHAN ARCHITECTS

CLASSROOM ADDITION FOR
MARGARET ELEMENTARY SCHOOL
680 COUNTY ROAD 12, ODENVILLE, ALABAMA 35120
ST. CLAIR COUNTY BOARD OF EDUCATION

STATE OF ALABAMA
No. 3365
RICK N. LATHAN
REGISTERED ARCHITECT

SHEET TITLE:
ROOM SIGNAGE FLOOR PLAN, LEGEND, AND DETAILS

PROJ. MGR.: S. WILSON
DRAWN: K. JOINER
Rasco
DATE: JANUARY 11, 2024
REVISIONS

JOB NO. 23-41
SHEET NO:
A8.1
14 OF 14

GENERAL NOTES

1.0 DESIGN CRITERIA

1.1 CODES AND SPECIFICATIONS:

A. GENERAL BUILDING CODE:
INTERNATIONAL BUILDING CODE, 2021 EDITION.

B. CONCRETE:
BUILDING CODE REQUIREMENTS FOR REINFORCED CONCRETE (ACI 318-19)

C. PRECAST CONCRETE:
PCI DESIGN HANDBOOK, LATEST EDITION

PCI MANUAL FOR QUALITY CONTROL FOR PLANTS AND PRODUCTIONS FOR PRECAST CONCRETE PRODUCTS, LATEST EDITION

D. ARCHITECTURAL PRECAST CONCRETE:
PCI MNL-122 ARCHITECTURAL PRECAST CONCRETE, LATEST EDITION

PCI MANUAL FOR QUALITY CONTROL FOR PLANTS AND PRODUCTION OF ARCHITECTURAL PRECAST CONCRETE PRODUCTS, LATEST EDITION

E. STRUCTURAL STEEL
SPECIFICATION FOR STRUCTURAL STEEL BUILDINGS, AMERICAN INSTITUTE OF STEEL CONSTRUCTION (ANSI/AISC 360-16)

F. STEEL DECK:
STEEL DECK INSTITUTE DESIGN MANUALS FOR COMPOSITE DECKS, NON-COMPOSITE DECKS, AND ROOF DECKS, LATEST EDITIONS

G. MASONRY:
SPECIFICATIONS FOR MASONRY STRUCTURES (TMS 602-16)

BUILDING CODE REQUIREMENTS FOR MASONRY STRUCTURES (TMS 402-16)

NATIONAL CONCRETE MASONRY ASSOCIATION'S STANDARD PRACTICES AND "SPECIFICATION FOR THE DESIGN AND CONSTRUCTION OF LOAD BEARING CONCRETE MASONRY", LATEST EDITION

H. STORM SHELTER SAFE SPACE:
ICC/NSSA STANDARD FOR THE DESIGN AND CONSTRUCTION OF STORM SHELTERS (ICC 500-2020)

1.2 DESIGN GRAVITY LOADS (PSF):

A. DEAD LOADS:
ANY CHANGES IN CONSTRUCTION MATERIALS FROM THOSE SHOWN ON THE ARCHITECTURAL OR STRUCTURAL DRAWINGS SHALL BE REPORTED BY THE GENERAL CONTRACTOR TO THE STRUCTURAL ENGINEER FOR VERIFICATION OF LOAD-CARRYING CAPACITY OF THE STRUCTURE.

B. FLOOR LIVE LOADS:
NON-REDUCIBLE PARTITION LIVE LOAD OF 20 PSF HAS BEEN INCLUDED PER IBC SECTION 1607.5.

LIVE LOAD REDUCTIONS AS DETERMINED BY IBC SECTION 1607.9 HAVE BEEN TAKEN WHERE PERMITTED.

FLOOR (REDUCIBLE)----------100
STORAGE----------125
CORRIDORS----------100
MECHANICAL ROOM AND ATTIC----------125
EXITWAYS----------100

C. ROOF LIVE LOADS:
WHERE PERMITTED ROOF LIVE LOADS ARE REDUCED FROM THE BASE VALUE SHOWN BELOW IN ACCORDANCE WITH IBC SECTION 1607.11

ROOF----------20
SHELTER ROOF (UNREDUCIBLE)----------100
SHELTER COLLAPSE LOAD (UNREDUCIBLE)----------140

D. ROOF SNOW LOADS:
GROUND SNOW LOAD (Pg)----------5.0
IMPORTANCE FACTOR (I)----------1.1
EXPOSURE FACTOR (Ce)----------1.0
THERMAL FACTOR (Ct)----------1.0

1.3 DESIGN LATERAL LOADS:

A. WIND LOADS:
ULTIMATE DESIGN WIND SPEED (3-SECOND GUST)----------114MPH
BASIC WIND SPEED (3-SECOND GUST)----------90MPH
WIND IMPORTANCE FACTOR (I)----------1.00
WIND EXPOSURE CATEGORY----------C
INTERNAL PRESSURE COEFFICIENTS---------- +/- 0.18
SEE TYPICAL DETAILS FOR COMPONENT AND CLADDING LOADS

B. SEISMIC LOADS:
OCCUPANCY CATEGORY III
SEISMIC IMPORTANCE FACTOR----------1.25
MAPPED SPECTRAL RESPONSE ACCELERATIONS:
SS----------0.273
S1----------0.100
SITE CLASS----------D
SPECTRAL RESPONSE COEFFICIENTS:
SDS----------0.288
SD1----------0.159
SEISMIC DESIGN CATEGORY----------C
BASIC SEISMIC-FORCE-RESISTING SYSTEM:
INTERMEDIATE REINFORCED MASONRY SHEAR WALLS
DESIGN BASE SHEAR: ----------27KIPS
SEISMIC RESPONSE COEFFICIENT, Cs ----------0.1028
RESPONSE MODIFICATION FACTOR----------3.5
ANALYSIS PROCEDURE: EQUIVALENT LATERAL FORCE PROCEDURE

C. STORM SHELTER SAFE SPACE WIND LOADS:
TYPE OF SHELTER----------TORNADO
SHELTER DESIGN WIND SPEED----------250 MPH
WIND IMPORTANCE FACTOR (I)----------1.0
WIND EXPOSURE CATEGORY----------C
INTERNAL PRESSURE COEFFICIENTS (GCpi)---------- +/- 0.55
TOPOGRAPHIC FACTOR (Kzt)----------1.0
DIRECTIONALITY FACTOR (Kd)----------1.0

HOST BUILDING CONNECTIONS TO SHELTER HAVE BEEN DESIGNED PER INTENT OF ICC 500.

STORM SHELTER HAS NOT BEEN CONSTRUCTED IN AN AREA SUSCEPTIBLE TO FLOODING PER ICC 500 SECTION 402.1.

PER ICC 500, SPECIAL INSPECTION AND QUALITY ASSURANCE REQUIREMENTS HAVE BEEN INCLUDED WITHIN THE PROJECT SPECIFICATIONS - REFER TO SPEC. SECTION 01410.

2.0 GENERAL CONDITIONS

2.1 THE STRUCTURAL DRAWINGS AND SPECIFICATIONS ARE A PORTION OF THE CONSTRUCTION DOCUMENTS. THE GENERAL CONTRACTOR AND SUBCONTRACTORS SHALL REFERENCE AND COORDINATE WITH OTHER DISCIPLINE'S DRAWINGS. ANY DISCREPANCIES OR OMISSIONS SHALL BE IMMEDIATELY REPORTED TO THE ARCHITECT AND STRUCTURAL DESIGN GROUP.

2.2 ALL REPORTS, PLANS, SPECIFICATIONS, COMPUTER FILES, FIELD DATA, NOTES, AND OTHER DOCUMENTS AND INSTRUMENTS PREPARED BY STRUCTURAL DESIGN GROUP AS INSTRUMENTS OF SERVICE SHALL REMAIN THE PROPERTY OF STRUCTURAL DESIGN GROUP. STRUCTURAL DESIGN GROUP SHALL RETAIN ALL COMMON LAW, STATUTORY, AND OTHER RESERVED RIGHTS, INCLUDING THE COPYRIGHT THERETO.

2.3 CONTRACTOR SHALL VERIFY ALL EXISTING DIMENSIONS, ELEVATIONS AND SITE CONDITIONS PRIOR TO FABRICATION/CONSTRUCTION. NOTIFY STRUCTURAL ENGINEER AND ARCHITECT OF ANY DISCREPANCIES PRIOR TO FABRICATION/CONSTRUCTION.

2.4 WHERE SHOP DRAWINGS, CALCULATIONS, OR SUBMITTALS ARE CALLED FOR IN THE PROJECT DOCUMENTS (DRAWINGS AND SPECIFICATIONS) AND ARE NOT PROVIDED BY THE CONTRACTOR, THE CONTRACTOR ASSUMES TOTAL RESPONSIBILITY FOR THE DESIGN AND ASSOCIATED WORK.

2.5 ENGINEER'S SHOP DRAWING REVIEW IS LIMITED TO REVIEW FOR GENERAL CONFORMANCE WITH THE DESIGN INTENT REFLECTED IN THE STRUCTURAL PORTION OF THE CONTRACT DOCUMENTS. THIS REVIEW DOES NOT RELIEVE THE CONTRACTOR FROM COMPLIANCE WITH THE DRAWINGS, SPECIFICATIONS OR OTHER PROJECT CONTRACT DOCUMENTS. NO RESPONSIBILITY IS ASSUMED OR IMPLIED FOR THE CORRECTNESS OF DIMENSIONS OR DETAILS. THIS REVIEW DOES NOT AUTHORIZE CHANGES TO THE CONTRACT SUM UNLESS STATED IN A SEPARATE WRITTEN FORM OR CHANGE ORDER. CONTRACTOR SHALL CONFIRM AND CORRELATE ALL QUANTITIES AND DIMENSIONS, SELECT FABRICATION PROCESSES AND TECHNIQUES OF CONSTRUCTION, COORDINATE HIS WORK WITH THAT OF OTHER TRADES, AND PERFORM HIS WORK IN A SAFE AND SATISFACTORY MANNER. CONTRACTOR SHALL ALSO REFER TO THE REQUIREMENTS OF THE GENERAL AND SUPPLEMENTARY GENERAL CONDITIONS.

2.6 ALL DETAILS SHOWN ARE TYPICAL. SIMILAR DETAILS APPLY TO SIMILAR CONDITIONS, UNLESS NOTED.

2.7 VERIFY ALL DIMENSIONS AND DETAILS SHOWN ON THESE DRAWINGS. ANY DISCREPANCIES OR OMISSIONS FOUND SHALL BE REPORTED TO THE ENGINEER AND OTHER DESIGN PROFESSIONALS AS APPROPRIATE FOR RESOLUTION PRIOR TO PROCEEDING WITH ANY RELATED WORK.

2.8 THESE DRAWINGS DO NOT INCLUDE PROVISIONS TO SATISFY JOB SITE SAFETY REQUIREMENTS. CONTRACTOR IS SOLELY RESPONSIBLE FOR ENSURING SAFETY DURING CONSTRUCTION, AND FOR CONFORMANCE TO ALL APPLICABLE OSHA STANDARDS. JOBSITE VISITS BY ENGINEER SHALL NOT CONSTITUTE APPROVAL, AWARENESS OR LIABILITY FOR ANY HAZARDOUS CONDITIONS.

2.9 STRUCTURAL OBSERVATION IS VISUAL OBSERVATION OF THE INPLACE STRUCTURE FOR GENERAL CONFORMANCE TO THE APPROVED CONSTRUCTION DOCUMENTS AT THE TIME OF THE OBSERVATION AND SHALL NOT BE CONSTRUED AS INSPECTION OR APPROVAL OF CONSTRUCTION. THE CONTRACTOR SHALL BE RESPONSIBLE FOR COORDINATING TESTING AND SPECIAL INSPECTIONS PER THE REQUIREMENTS IN THE PROJECT MANUAL.

2.10 THE CONTRACTOR IS SOLELY RESPONSIBLE FOR BRACING AND SHORING ALL EXCAVATIONS, DEWATERING OF EXCAVATION FROM EITHER SURFACE WATER, GROUND WATER OR SEEPAGE, TEMPORARY AND EXISTING STRUCTURES, AND PARTIALLY COMPLETED PORTIONS OF THE WORK TO ASSURE THE SAFETY OF ANY PERSON COMING IN CONTACT WITH THE WORK.

2.11 OBSERVATION BY THE ENGINEER OF RECORD'S OFFICE DOES NOT REPLACE INSPECTIONS AND TESTING BY THE TESTING AGENCY OR SPECIAL INSPECTOR.

3.0 FOUNDATIONS

3.1 GEOTECHNICAL REPORT: FOUNDATION DESIGN IS BASED ON THE GEOTECHNICAL REPORT BY GALET & ASSOCIATES, INC., TITLED "SUPPLEMENTAL GEOTECHNICAL EXPLORATION MARGARET ELEMENTARY SCHOOL MAIN STREET MARGARET, ALABAMA PROJECT NO.08BHSTCD302G" ALONG WITH ANY SUPPLEMENTAL CORRESPONDENCE. THE GENERAL CONTRACTOR SHALL OBTAIN A COPY OF THE GEOTECHNICAL REPORT FROM THE OWNER AND FOLLOW ALL REQUIREMENTS AND RECOMMENDATIONS. GEOTECHNICAL RECOMMENDATIONS SHALL TAKE PRECEDENCE OVER THE ITEMS THAT FOLLOW IN THIS SECTION OF THE STRUCTURAL GENERAL NOTES.

3.2 MAXIMUM ALLOWABLE BEARING PRESSURE PER GEOTECHNICAL REPORT: 2500 PSF.

NOTE: ALL FOOTING BEARING ELEVATIONS SHALL BE BEARING IN SIMILAR MATERIAL (NATIVE SOILS OR WEATHERED BEDROCK), EXTEND FOOTINGS AS NECESSARY WITH LEAN CONCRETE OR FLOWABLE FILL.

3.3 ALL FOUNDATION BEARING SURFACES SHALL BE REVIEWED BY THE GEOTECHNICAL ENGINEER PRIOR TO PLACING CONCRETE TO ENSURE THEIR COMPLIANCE WITH PRESSURES NOTED. ALL FOOTING ELEVATIONS ARE ESTIMATED AND MAY BE ADJUSTED IN THE FIELD BY THE GEOTECHNICAL ENGINEER.

3.4 COMPACTED FILL WITHIN THE BUILDING AREA (AND EXTENDING 10'-0" OUTSIDE THE EXTERIOR BUILDING LINE) SHALL MEET THE REQUIREMENTS PROVIDED BY THE GEOTECHNICAL ENGINEER.

3.5 BACKFILL FOR FOUNDATION AND RETAINING WALLS SHALL BE A FREE DRAINING GRANULAR MATERIAL, SUCH AS SIZE #57 STONE. BACKFILL SHALL BE COMPACTED SUFFICIENTLY TO PREVENT SUBSIDENCE OF SURFACE ADJACENT TO WALL. THE GRANULAR MATERIAL SHALL BE PLACED IN A 45 DEGREE WEDGE EXTENDING FROM THE BASE OF THE FOOTING TO WITHIN 18" OF FINISH GRADE ON EXTERIOR AND TO UNDERSIDE OF SLAB ON INTERIOR. AT EXTERIOR, CAP GRANULAR BACKFILL WITH 18" OF SOIL.

3.6 GRANULAR BACKFILL SUPPORTING A FOOTING SHALL BE COMPACTED UNDER THE DIRECT SUPERVISION OF THE GEOTECHNICAL ENGINEER OR HIS APPROVED REPRESENTATIVE. PROVIDE A 12" THICK CAP OF PROPERLY COMPACTED CRUSHER RUN STONE BETWEEN THE FOOTING AND THE PROPERLY COMPACTED GRANULAR BACKFILL. EXTEND CRUSHER RUN CAP TWO FEET BEYOND THE PERIMETER OF THE FOOTING OR AS DIRECTED BY THE GEOTECHNICAL ENGINEER.

3.7 FOUNDATION AND RETAINING WALLS SHALL NOT BE BACKFILLED UNTIL CONCRETE HAS ATTAINED THE REQUIRED 28 DAY COMPRESSIVE STRENGTH.

3.8 DO NOT PLACE BACKFILL AGAINST FOUNDATION WALLS UNTIL UPPER BRACING FLOORS ARE IN PLACE FOR AT LEAST SEVEN DAYS AND HAVE ATTAINED 75% OF DESIGN STRENGTH.

3.9 WHERE CONCRETE WALLS SUPPORT EARTH ON BOTH SIDES, BACKFILL EACH SIDE SIMULTANEOUSLY.

3.10 WHERE SPREAD FOOTINGS ARE AT THE SAME ELEVATION AS CONTINUOUS WALL FOOTINGS, REINFORCING STEEL IN CONTINUOUS WALL FOOTINGS SHALL EXTEND THRU SPREAD FOOTINGS. WHERE SPREAD FOOTINGS ARE BELOW CONTINUOUS WALL FOOTINGS, CONTINUOUS WALL FOOTINGS ARE TO STEP DOWN ONTO SPREAD FOOTINGS.

3.11 SUBGRADE AND GRANULAR FILL SUPPORTING SLABS ON GRADE SHALL BE AS RECOMMENDED BY THE GEOTECHNICAL REPORT AND COMPACTED UNDER THE DIRECT SUPERVISION OF THE GEOTECHNICAL ENGINEER OR HIS APPROVED REPRESENTATIVE. SEE SPECIFICATIONS FOR VAPOR RETARDER BENEATH SLABS ON GRADE

3.12 GRANULAR FILL BENEATH SLABS, UNLESS NOTED OTHERWISE, SHALL BE 4" COMPACTED #57 STONE.

3.13 VAPOR RETARDER BENEATH SLABS ON GRADE, UNLESS NOTED, SHALL MEET ASTM E 1745, CLASS A, 15 MIL MINIMUM THICKNESS WITH MANUFACTURER'S RECOMMENDED ADHESIVE OR PRESSURE-SENSITIVE TAPE AND PIPE BOOTS, SUCH AS W.R. MEADOWS INC. PRODUCT PERMINATOR 15.

NO EXCAVATION SHALL BE CLOSER THAN AT A SLOPE OF 2:1 (TWO HORIZONTAL TO ONE VERTICAL) TO A FOOTING

4.0 CONCRETE

4.1 CONCRETING OPERATIONS SHALL COMPLY WITH ACI STANDARDS.

4.2 CONCRETE COMPRESSIVE STRENGTH AT 28 DAYS (PSI), TYPE OF CONCRETE, MAXIMUM WATER/CEMENTITIOUS RATIO, AIR CONTENT, SLUMP, AND CONCRETE USE:

STRENGTH	TYPE	MAX W/C	AIR	SLUMP	USE
3000	NORMAL WT.	0.57	----	3" TO 5"	FOOTINGS
3500	NORMAL WT.	0.50	----	3" TO 5"	SLABS ON GRADE
4000	NORMAL WT.	0.45	4-6%	3" TO 5"	UNLESS NOTED

4.3 REINFORCING BARS: ASTM A615 GRADE 60.

4.4 WATERSTOPS: FLEXIBLE PVC WATERSTOPS, CE CRD-C 572, UNLESS NOTED OTHERWISE, WITH FACTORY-INSTALLED METAL EYELETS, FOR EMBEDDING IN CONCRETE TO PREVENT PASSAGE OF FLUIDS THROUGH JOINTS. FACTORY FABRICATE CORNERS, INTERSECTIONS, AND DIRECTIONAL CHANGES. ACCEPTABLE MANUFACTURER IS THE GREENSTREAK GROUP, INC, 800-325-9504, OR EQUAL. PROFILE SHALL BE FLAT, DUMBBELL WITH CENTER BULB WITH DIMENSIONS OF 6 INCHES BY 3/8 INCH THICK.

A. FLEXIBLE WATERSTOP INSTALLATION: INSTALL IN CONSTRUCTION JOINTS AND AT OTHER JOINTS INDICATED TO FORM A CONTINUOUS DIAPHRAGM. INSTALL IN LONGEST LENGTHS PRACTICABLE. SUPPORT AND PROTECT EXPOSED WATERSTOPS DURING PROGRESS OF THE WORK.

4.5 REINFORCING STEEL SHOWN IN SECTIONS AND DETAILS ARE A SCHEMATIC INDICATION THAT REINFORCING EXISTS. SEE SCHEDULES, SECTION NOTES AND GENERAL NOTES FOR ACTUAL REINFORCING REQUIRED.

4.6 REINFORCING BAR PLACING ACCESSORIES IN ACCORDANCE WITH ACI MANUAL OF STANDARD PRACTICE. WHERE CONCRETE IS EXPOSED IN FINISHED BUILDING, PROVIDE ACCESSORIES WITH RUSTPROOF LEGS. WHERE CONCRETE IS SAND-BLASTED OR BUSH-HAMMERED, PROVIDE ACCESSORIES OF STAINLESS STEEL.

4.7 DETAIL REINFORCEMENT IN ACCORDANCE WITH ACI 315. REINFORCEMENT SHALL NOT BE WELDED, UNLESS NOTED OR APPROVED BY THE ENGINEER.

4.8 ALL SPLICES SHALL BE CLASS "B" TENSION LAP SPLICE, UNLESS NOTED.

4.9 ALL REINFORCING MARKED "CONT." INDICATES REINFORCING SHALL BE "CONTINUOUS" AND SHALL BE SPLICED WITH CLASS "B" TENSION LAP SPLICE, UNLESS NOTED.

4.10 PROVIDE CORNER BARS AT ALL CORNERS OF CONTINUOUS REINFORCING IN FOOTINGS, SLABS, OR WALLS. CORNER BARS SHALL BE LONG ENOUGH TO PROVIDE A CLASS "B" LAP SPLICE OF REINFORCING BARS.

4.11 CONCRETE COVERAGE OF REINFORCEMENT, UNLESS NOTED:

FOOTINGS----------2" TOP & 3" BOTTOM & SIDES
COLUMNS & PEDESTALS----------1-1/2" CLEAR OF TIES
BASEMENT WALLS----------2" BOTH FACES
FOUNDATION RETAINING WALLS----------2" BOTH FACES
SUMP AND PIT WALLS----------3" BOTH FACES
BEAMS----------1-1/2" CLEAR OF STIRRUPS
SLAB FACES NOT EXPOSED TO WEATHER OR EARTH----------3/4"
SLAB FACES EXPOSED TO WEATHER
#5 AND LESS----------1-1/2"
#6 AND GREATER----------2"

NOTE: SLAB ON GRADE WWR OR REINFORCEMENT EACH WAY SHALL BE 2" CLEAR FROM TOP OF SLAB. SEE EARTH SUPPORTED SLABS SECTION BELOW.

4.12 WELDED WIRE REINFORCEMENT (WWR): ASTM A1064/A1064M. MINIMUM LAP AND EMBEDMENT TO BE THE GREATER OF ONE CROSS WIRE SPACING PLUS 2 INCHES OR 6 INCHES.

4.13 PROVIDE CORNER BARS AT ALL CORNERS OF CONTINUOUS REINFORCING IN FOOTINGS, SLABS OR WALLS. CORNER BARS SHALL BE LONG ENOUGH TO PROVIDE A CLASS "B" LAP SPLICE OF REINFORCING BARS.

4.14 EARTH SUPPORTED SLABS:

4" THICK (UNLESS NOTED), REINFORCED WITH 6X6 w2.9/w2.9 WWR FLAT SHEETS SUPPORTED 2" CLEAR OF TOP OF SLAB, UNLESS NOTED. WWR TO BE CHAIRED AT 36 INCHES EACH WAY MINIMUM. SEE FOUNDATION NOTES FOR SUBGRADE REQUIREMENTS.

PROVIDE CONTROL AND CONSTRUCTION JOINTS AT 3-4 TIMES SLAB THICKNESS IN FEET MAXIMUM OR AS REQUIRED TO PREVENT UNCONTROLLED CRACKING PER ACI RECOMMENDATIONS. AS AN EXAMPLE, FOR A 4" THICK SLAB PROVIDE JOINTS SPACED 12 - 16 FEET MAXIMUM. PANELS TO BE RECTANGULAR WITH LONG SIDE NOT TO EXCEED 1-1/2 TIMES SHORT SIDE. CUTTING SHOULD BE STARTED AS SOON AS CONCRETE HAS HARDENED SUFFICIENTLY TO PREVENT AGGREGATE FROM BEING DISLODGE. CONTRACTOR SUBMIT PLAN SHOWING LOCATION OF CONSTRUCTION AND CONTROL JOINTS.

FLOOR DESIGN AND CONSTRUCTION BASIS IS ACI 302 AND 360, AND IT IS UNREALISTIC TO EXPECT CRACK-FREE OR CURL-FREE FLOORS. IT IS NORMAL TO EXPECT SOME AMOUNT OF CRACKING AND CURLING IN THE SLAB ON GRADE, AND SUCH OCCURRENCE DOES NOT NECESSARILY REFLECT ADVERSELY ON EITHER THE ADEQUACY OF THE FLOOR DESIGN OR THE QUALITY OF ITS CONSTRUCTION.

EARTH SUPPORTED SLABS SHALL BE MOIST CURED FOR A MINIMUM OF SEVEN DAYS. SEE SPECIFICATIONS FOR ADDITIONAL INFORMATION. CURING COMPOUNDS, UNLESS NOTED, SHALL BE A MINIMUM OF CLEAR, WATERBORNE, MEMBRANE-FORMING CURING COMPOUND MEETING ASTM C 309, TYPE 1, CLASS B, SELF-DISSIPATING, CERTIFIED BY CURING COMPOUND MANUFACTURER TO NOT INTERFERE WITH BONDING OF FLOOR COVERING.

WHERE CONTROL JOINTS TERMINATE INTO NON-PARALLEL CONTROL JOINTS, PROVIDE 2#4 X 6'-0" BARS MID DEPTH OF SLAB PERPENDICULAR TO TERMINAL CONTROL JOINT.

PROVIDE 2#4 X 6'-0" BARS MID DEPTH OF SLAB AT REENTRANT CORNERS.

WHERE CONTROL JOINTS TERMINATE AT EMBEDDED STEEL ELEMENTS (SUCH AS EDGE REINFORCEMENT AT LOADING DOCKS), PROVIDE JOINT IN STEEL ELEMENT.

4.15 CONTRACTION JOINTS IN WALLS: WALL JOINTS SHALL NOT BE SPACED FARTHER THAN 15 FEET FOR 8" WALLS, 20 FEET FOR 10" WALLS AND 30 FEET FOR 12" WALLS. WALL JOINTS SHALL ADDITIONALLY NOT BE LOCATED WITHIN 4'-0" OF EMBED PLATES OR CORNERS OF THE WALL. DISCONTINUE 50% OF THE WALL HORIZONTAL REINFORCING THROUGH JOINTS; TRIMMING BACK THE REINFORCING BARS 2" FROM THE CONTROL JOINT LOCATION. LOCATE CONTROL JOINTS EACH SIDE OF THE WALL. SEAL JOINTS WITH ELASTOMERIC SEALANT. SEE WALL CONTRACTION JOINT TYPICAL DETAIL.

4.16 WALL AND SLAB OPENINGS AND SLEEVES SMALLER THAN 12" (IN LARGER DIMENSION) ARE NOT SHOWN ON PLANS. CONTRACTOR SHALL SUBMIT ALL OPENINGS (SIZE AND LOCATIONS) AS A SINGLE COORDINATED SLEEVE PLAN FOR REVIEW AND APPROVAL.

4.17 CAST IN PLACE ALL SLEEVES AND INSERTS.

4.18 NO CONDUIT OR PIPE SHALL BE CAST IN THE SLAB ON GRADE WITHOUT THE WRITTEN APPROVAL OF STRUCTURAL DESIGN GROUP.

5.0 ARCHITECTURAL AND STRUCTURAL PRECAST CONCRETE

5.1 REFER TO ARCHITECT'S DRAWINGS AND SPECIFICATIONS FOR DIMENSIONAL, FINISHING, AND OTHER REQUIREMENTS OF THE ARCHITECTURAL PRECAST.

5.2 PRECAST MANUFACTURER IS TO BE RESPONSIBLE FOR THE DESIGN OF ALL PRECAST MEMBERS AND THEIR CONNECTIONS TO THE STRUCTURE AS WELL AS THE DESIGN OF THE ANY REQUIRED TOPPING SLABS FOR GRAVITY AND LATERAL LOADS. CALCULATIONS AND SHOP DRAWINGS SHALL BE SUBMITTED BEARING THE SEAL OF A PROFESSIONAL ENGINEER REGISTERED IN THE STATE WHERE THE PROJECT IS LOCATED.

5.3 ANY CONNECTIONS SHOWN ON CONTRACT DRAWINGS ARE SHOWN FOR GENERAL ARRANGEMENT ONLY. THE CONTRACTOR SHALL COORDINATE ALL PRECAST CONNECTIONS AND EMBEDDED ITEMS WITH THE PRECAST MANUFACTURER.

A. CONNECTIONS OF THE PRECAST TO THE STRUCTURE SHALL NOT RESTRAIN THE STRUCTURE'S 1" DOWNWARD MOVEMENT AT ALL BEAMS AND 1" UPWARD MOVEMENT AT ROOF BEAMS.

5.4 ERECTOR SHALL BE RESPONSIBLE FOR PROVIDING ALL TEMPORARY BRACING UNTIL ALL CONNECTIONS HAVE BEEN MADE AND TOPPING HAS BEEN CAST.

5.5 PRECAST MANUFACTURER SHALL PROVIDE STABILIZING ANGLES AND SIMILAR MISCELLANEOUS METALS, AS REQUIRED, FOR ALL PRECAST WORK.

5.6 ALL EXPOSED STEEL CONNECTIONS AND SUPPORT ANGLES, PLATES, BARS AND BOLTS IN CONJUNCTION WITH ALL PRECAST CONCRETE SHALL BE HOT-DIP GALVANIZED AFTER FABRICATION AND FIELD TOUCHED UP WITH ZINC RICH PAINT.

5.7 ADJUSTMENT AND POSSIBLY RESETTING OF PRECAST MAY BE REQUIRED TO ALIGN PRECAST DUE TO SUPPORT DEFLECTION AND/OR ROTATION.

5.8 SUPPORTING BEAMS AND STRUCTURE WILL DEFLECT AND/OR ROTATE. PRECAST MANUFACTURER AND ERECTOR SHALL COORDINATE CONNECTION/ERECTION SEQUENCE TO ACCOUNT FOR THIS MOVEMENT AND MAKE FINAL ADJUSTMENTS TO ALIGN AND PLUMB PRECAST. THIS MAY REQUIRE ADJUSTING CONNECTIONS OR RECONNECTING.

6.0 PRECAST CONCRETE HOLLOW CORE SLABS

6.1 PRECAST MANUFACTURER IS TO BE RESPONSIBLE FOR THE DESIGN OF ALL PRECAST MEMBERS AND THEIR CONNECTIONS TO THE STRUCTURE. CALCULATIONS AND SHOP DRAWINGS SHALL BE SUBMITTED BEARING THE SEAL OF A PROFESSIONAL ENGINEER REGISTERED IN THE STATE WHERE THE PROJECT IS LOCATED.

A. PRECAST MANUFACTURER SHALL LIMIT USE TO 2" MAXIMUM OF THE TOPPING SLAB FOR COMPOSITE ACTION IN THE DESIGN OF THE PRECAST PANELS TO ALLOW FOR A 1" MAXIMUM CAMBER IN THE SELF-WEIGHT INSTALLED CONDITION.

1. THE REMAINING 1" OF THE TOPPING SLAB IS TO BE APPLIED AS SUPERIMPOSED DEAD LOAD TO THE PRECAST PANELS.

2. PRECAST MANUFACTURER IS TO PROVIDE ANTICIPATED CAMBER & DEFLECTION CALCULATIONS FOR ALL PRECAST PANELS SO THAT IT CAN BE VERIFIED THAT THE POSITIVE CAMBER IN THE SELF-WEIGHT INSTALLED CONDITION HAS BEEN LIMITED TO 1" MAXIMUM.

3. PRECAST MANUFACTURER IS RESPONSIBLE FOR ADDING AND INCLUDING IN THE BASE BID ANY ADDITIONAL REINFORCING STEEL IN THE TOPPING SLAB AS MAY BE REQUIRED TO CONTROL LONG-TERM CREEP ISSUES WITH THE PRESTRESSED SLAB PANELS.

4. STORM SHELTER PRECAST PANELS SHALL BE DESIGNED FOR 240 PSF SHELTER ROOF LIVE LOAD + SHELTER COLLAPSE LOAD IN ADDITION TO OTHER LOADS (SW, DL, CDL, & WL).

B. PRECAST MANUFACTURER IS TO BE RESPONSIBLE FOR DETERMINING AND VERIFY ANY NECESSARY STEPS, SUCH AS THE ROUGHENING OF PRECAST PANELS AND/OR THE USE OF A CONCRETE BONDING AGENT, IN ORDER TO OBTAIN COMPOSITE ACTION OF THE PRECAST PANELS WITH THE STRUCTURAL TOPPING SLAB. ANY NECESSARY STEPS SHALL BE INDICATED ON THE SUBMITTED CALCULATIONS AND SHOP DRAWINGS BY THE PRECAST MANUFACTURER.

C. PRECAST MANUFACTURER IS TO PROVIDE WEEP HOLES IN ALL CORES AT EACH END OF ALL PRECAST PANELS. CONTRACTOR HAS THE OPTION TO FIELD INSTALL WEEP HOLES PER PRECAST MANUFACTURER'S WRITTEN INSTRUCTIONS.

6.2 PRECAST MANUFACTURER SHALL DESIGN HOLLOW CORE SLABS FOR THE SUPERIMPOSED LOADS LISTED BELOW PLUS SELF-WEIGHT PLUS ALL MASONRY BLOCK WEIGHTS, LIVE LOADS, WIND LOADS, OTHER LOADS SHOWN IN THESE DRAWINGS. DESIGN AND CONSTRUCTION SHALL BE IN ACCORDANCE WITH ACI-318 AND PCI DESIGN HANDBOOK, LATEST EDITION.

3" TOPPING SLAB ----------38 PSF
COLLATERAL DEAD LOAD ----------20 PSF

FOR LIVE LOADS, SEE GENERAL NOTES 1.2.B & 1.2.C, PLAN NOTES, AND SECTION NOTES

FOR WIND LOADS, SEE GENERAL NOTE 1.3.C, COMPONENTS AND CLADDING WIND LOAD TABLES ON S1.4, TYPICAL DETAILS, PLAN NOTES, AND SECTION NOTES

FOR HOUSEKEEPING PADS UNDER MECHANICAL UNITS, COORDINATE SIZE AND LOCATION OF HOUSEKEEPING PADS WITH MECHANICAL DRAWINGS

6.3 ANY CONNECTIONS SHOWN ON CONTRACT DRAWINGS ARE SHOWN FOR GENERAL ARRANGEMENT ONLY. THE CONTRACTOR SHALL COORDINATE ALL PRECAST CONNECTIONS AND EMBEDDED ITEMS WITH THE PRECAST MANUFACTURER.

6.4 REINFORCE 3" TOPPING SLAB WITH 6X6 W1.4/W1.4 WWR FLAT SHEETS AT MID-DEPTH OF TOPPING.

A. CONDUITS AND PIPING SHALL NOT BE PLACED IN THE TOPPING SLAB.

6.5 ERECTOR SHALL BE RESPONSIBLE FOR PROVIDING ALL TEMPORARY BRACING UNTIL ALL CONNECTIONS HAVE BEEN MADE AND TOPPING HAS BEEN CAST.

6.6 PRECAST MANUFACTURER SHALL PROVIDE STABILIZING ANGLES AND SIMILAR MISCELLANEOUS METALS, AS REQUIRED, FOR ALL PRECAST WORK.

6.7 ALL EXPOSED STEEL CONNECTIONS AND SUPPORT ANGLES, PLATES, BARS, AND BOLTS IN CONJUNCTION WITH ALL PRECAST CONCRETE SHALL BE HOT-DIP GALVANIZED AFTER FABRICATION AND FIELD TOUCHED UP WITH ZINC RICH PAINT.

6.8 PRECAST CONCRETE HOLLOW CORE SLAB LOCATIONS SHOWN ON THE DRAWINGS ARE ESTIMATED AND SHALL BE VERIFIED BY THE PRECAST MANUFACTURER.

6.9 CONTRACTOR IS TO COORDINATE (MECHANICAL, ELECTRICAL, PLUMBING, ETC.) OPENINGS IN HOLLOW CORE PRECAST CONCRETE SLAB PANELS WITH PRECAST MANUFACTURER.

A. ALL FIELD CUT OPENINGS THROUGH HOLLOW CORE PRECAST CONCRETE SLAB PANELS SHALL BE LOCATED TO AVOID CUTTING PRESTRESS STRANDS, UNLESS GIVEN APPROVAL BY THE PRECAST MANUFACTURER PRIOR TO COMMENCING WORK.

6.10 ALL OPENINGS IN THE PRECAST PANELS SHALL BE SHOWN ON THE PRECAST PANEL SHOP DRAWINGS. EXACT LOCATIONS AND OPENING DIMENSIONS SHALL BE INDICATED. ANY DETAILING NECESSARY FOR THE SUPPORT OF THE PANELS AT THE OPENINGS SHALL BE INDICATED ON THE SHOP DRAWINGS. ANY ADDITIONAL STEEL FRAMING REQUIRED AT SLAB OPENINGS SHALL BE THE RESPONSIBILITY OF THE CONTRACTOR AND INCLUDED IN THE BASE BID AND SHALL BE PROVIDED AT NO ADDITIONAL EXPENSE TO THE OWNER.

6.11 BEARING STRIPS SHALL BE RANDOM ORIENTED FIBER REINFORCED MATERIAL CAPABLE OF SUPPORTING A COMPRESSIVE STRESS OF 3000 PSI WITH NO CRACKING, SPLITTING, OR DELAMINATION.

7.0 STRUCTURAL STEEL

7.1 FABRICATE AND ERECT ALL STRUCTURAL STEEL IN ACCORDANCE WITH AISC "SPECIFICATION FOR THE DESIGN, FABRICATION, AND ERECTION OF STRUCTURAL STEEL FOR BUILDINGS".

7.2 THE STEEL FRAME IS "NON-SELF-SUPPORTING". ADEQUATE TEMPORARY SUPPORT MUST BE PROVIDED BY THE CONTRACTOR UNTIL REQUIRED CONNECTIONS OR ELEMENTS ARE IN PLACE.

7.3 STRUCTURAL STEEL: ASTM A992 FOR WIDE FLANGE BEAMS AND COLUMNS; ASTM A36 FOR CHANNELS, STIFFENER PLATES, BASE PLATES, COLUMN CAP PLATES, BEAM CONNECTION PLATES AND STEEL ANGLES.

7.4 HOLLOW STRUCTURAL SECTIONS (HSS): ASTM A500, GRADE B.

7.5 WELDED CONNECTIONS: E70XX ELECTRODES, MINIMUM SIZE FILLET WELD 3/16". WELDING QUALIFICATION, PROCEDURES AND PERSONNEL SHALL BE CERTIFIED ACCORDING TO AWS D1.1, THE STRUCTURAL WELDING CODE - STEEL.

7.6 THREADED AND PLAIN STEEL RODS: ASTM A36

7.7 ANCHOR RODS: ASTM F1554 GRADE 36 ANCHOR AND HEAVY H

GENERAL NOTES CONTINUED

E. DESIGN CALCULATIONS FOR THE CONNECTIONS DESIGNED BY THE CONTRACTOR SHALL BE SUBMITTED FOR THE FILES OF THE ARCHITECT AND ENGINEER. CALCULATIONS SHALL BEAR THE SEAL OF A PROFESSIONAL ENGINEER REGISTERED IN THE STATE WHERE THE PROJECT IS LOCATED. SHOP DRAWINGS CONTAINING CONNECTIONS FOR WHICH CALCULATIONS HAVE NOT BEEN RECEIVED WILL BE RETURNED UNCHECKED AS AN INCOMPLETE SUBMITTAL.

7.10 ALL STRUCTURAL STEEL, INCLUDING EXPOSED BOLTS, NUTS, WASHERS OR ANCHOR RODS, EXPOSED TO WEATHER IN THE FINAL CONFIGURATION OF THE STRUCTURE SHALL BE HOT-DIP GALVANIZED, UNLESS NOTED, PER ASTM A 123/A 123M. VENT HOLES SHALL BE FILLED AND GROUND SMOOTH AFTER GALVANIZING. DAMAGE TO GALVANIZING SHALL BE PAINTED WITH GALVANIZING REPAIR PAINT, SSPC-PAINT 20. SEE 05120 SPECIFICATION FOR PAINT REQUIREMENTS FOR STEEL THAT IS GALVANIZED AND PAINTED.

7.11 ALL STEEL EXPOSED TO WEATHER, INCLUDING STEEL LINTELS FOR MASONRY OPENINGS, EXCEPT WHERE FABRICATED OF APPROVED CORROSION-RESISTANT STEEL OR OF STEEL HAVING A CORROSION RESISTANT OR OTHER APPROVED COATING, SHALL BE PROTECTED AGAINST CORROSION WITH AN APPROVED COAT OF PAINT, ENAMEL, OR OTHER APPROVED PROTECTION.

7.12 ALL HANDRAILS, GUARDRAILS, AND EMBEDS NOT SPECIFICALLY DETAILED ON THE DRAWINGS SHALL BE DESIGNED IN ACCORDANCE WITH THE APPLICABLE BUILDING CODE NOTED ABOVE, BY THE CONTRACTOR, UNDER THE DIRECT SUPERVISION OF A PROFESSIONAL ENGINEER REGISTERED IN THE STATE WHERE THE PROJECT IS LOCATED. CALCULATIONS SHALL BEAR THE SEAL OF THE PROFESSIONAL ENGINEER REGISTERED IN THE STATE WHERE THE PROJECT IS LOCATED AND SHALL BE SUBMITTED FOR THE FILES OF THE ARCHITECT AND SHALL BE INCLUDED WITH THE SHOP DRAWINGS.

7.13 PROVIDE ¾" THICK CLOSURE PLATES ON THE ENDS OF TUBE STEEL BEAMS. SHOP WELD TO BEAM WITH ¼" PARTIAL PENETRATION WELDS ALL AROUND.

8.0 STEEL DECK

8.1 DECK PROPERTIES AND ATTACHMENTS SHALL BE IN ACCORDANCE WITH THE STEEL DECK INSTITUTE (SDI).

8.2 DECK SHALL BE CONTINUOUS OVER THREE OR MORE SPANS. WHERE DECK SPANS LESS THAN THREE SPANS ARE REQUIRED, THEY SHOULD BE CLEARLY MARKED ON THE SHOP DRAWINGS.

8.3 DESIGN ROOF DECK TO RESIST THE WIND UPLIFT LOADING FROM THE COMPONENTS AND CLADDING WIND LOAD TABLE PROVIDED IN THE TYPICAL DETAILS.

8.4 STEEL ROOF DECK SHALL BE CONNECTED TO SUPPORTING STRUCTURE WITH 5/8" DIAMETER PUDDLE WELDS [WITH WELD WASHERS FOR DECKS THINNER THAN 22 GAGE] IN A 36/4 PATTERN, SEE TYPICAL DETAILS AND/OR PLAN/SECTION NOTES. SIDE LAP FASTENERS SHALL BE #10 TEK SCREWS. PROVIDE ONE SIDELAP FASTENER PER SPAN. ROOF DECK GALVANIZING DAMAGED BY WELDING AND WELD ITSELF SHALL BE PAINTED WITH A COLD GALVANIZING PAINT.

8.5 ROOF DECK: WIDE RIB TYPE "WR", STEEL ROOF DECK, 20 GAGE, 1-1/2" DEEP, GALVANIZED.

8.6 CONTRACTOR OPTION TO USE HILTI S-SLC 02 M HWH IN LIEU OF #10 SIDELAP SCREWS AND HILTI FASTENERS IN LIEU OF #12 TEK SCREWS AS FOLLOWS: HILTI S-MD 12-24x1-5/8 HWH5 SCREWS FOR STUDS, JOISTS AND BEAMS WITH 16 GA ≤ tf ≤ 1/4"; HILTI X-HSN 24 PINS FOR JOISTS AND BEAMS WITH 1/8" ≤ tf ≤ 3/8"; & HILTI X-ENP 19 L15 PINS FOR BEAMS WITH tf ≥ 1/4".

8.7 WELDED CONNECTIONS: E60XX ELECTRODES. WELDING QUALIFICATION, PROCEDURES AND PERSONNEL SHALL BE CERTIFIED ACCORDING TO AWS D1.3, THE STRUCTURAL WELDING CODE - SHEET STEEL.

8.8 LIGHT GAUGE METAL FRAMING, SUSPENDED CEILINGS, LIGHT FIXTURES AND DUCTS OR OTHER UTILITIES SHALL NOT BE SUPPORTED BY THE STEEL ROOF DECK.

8.9 NAILABLE SUBSTRATE SHALL BE FASTENED TO STEEL ROOF DECK WITH #8 ROUND HEAD, ZINC PLATED SELF-TAPPING SCREWS AT 12" O.C. EACH WAY. AT CORNER ZONES, ATTACH SCREWS AT 6" O.C. - SEE TYPICAL DETAILS FOR CORNER ZONES.

9.0 MASONRY

9.1 MASONRY CONSTRUCTION SHALL CONFORM TO TMS 602-16 SPECIFICATION.

9.2 ALL MASONRY MATERIALS AND CONSTRUCTION SHALL COMPLY WITH THE RECOMMENDATIONS OF BRICK INSTITUTE OF AMERICA (BIA) AND NATIONAL CONCRETE MASONRY ASSOCIATION (NCMA) AND MINIMUM REQUIREMENTS ESTABLISHED BY THE LOCAL BUILDING CODE.

9.3 MINIMUM COMPRESSIVE STRENGTH OF CONCRETE MASONRY UNIT (f'm) SHALL BE 2000 PSI AT 28 DAYS.

9.4 NET COMPRESSIVE STRENGTH FOR EACH CMU UNIT SHALL MEET OR EXCEED 2000 PSI AT 28 DAYS. FOR TYPE N MORTAR, NET COMPRESSIVE STRENGTH FOR BLOCK SHALL BE GREATER THAN 2650 PSI.

9.5 ALL MASONRY SHALL BE NORMAL WEIGHT IN ACCORDANCE WITH ASTM C90.

9.6 GROUT COMPRESSIVE STRENGTH SHALL BE 2500 PSI AT 28 DAYS. GROUT SHALL ADDITIONALLY COMPLY WITH TABLE 7 OF ACI 530.1/ASCE 6/TMS 602 FOR DIMENSIONS OF GROUT SPACES AND POUR HEIGHTS. COURSE GROUT SHALL BE USED WHERE POSSIBLE.

9.7 MORTAR SHALL BE TYPE S OR M. TYPE N MORTAR ALLOWED ONLY IF CMU NET COMPRESSIVE STRENGTH GREATER THAN 2650 PSI.

9.8 ALL MASONRY SHALL BE STACKED BOND, UNLESS NOTED.

9.9 ALL BLOCK CELLS AND CAVITIES BELOW GRADE SHALL BE FILLED WITH CONCRETE OR GROUT.

9.10 MASONRY REINFORCING LAP SPLICE LENGTHS PER SCHEDULE. SEE MASONRY LAP SPLICE LENGTHS TYPICAL DETAIL.

9.11 THE CONTRACTOR SHALL PROVIDE DETAILED SHOP DRAWINGS OF THE CMU REINFORCEMENT.

A. SHOP DRAWINGS SHALL INCLUDE AN ELEVATION VIEW OF EACH REINFORCED WALL WITH ALL VERTICAL AND HORIZONTAL REINFORCING AS WELL AS WALL OPENINGS/PENETRATIONS SHOWN. REINFORCING SHOP DRAWINGS NOT CONTAINING THESE ELEVATION DRAWINGS WILL BE RETURNED AS AN INCOMPLETE SUBMITTAL.

9.12 MASONRY CONTROL JOINTS SHALL BE AS INDICATED ON THE ARCHITECTURAL DRAWINGS. FOR ADDITIONAL INFORMATION ON CONTROL JOINTS SEE TYPICAL DETAILS.

9.13 WHEN REINFORCING IS SPECIFIED, PROVIDE AT EACH SIDE OF CONTROL JOINTS, OPENINGS AND WALL ENDS.

9.14 EXTEND REBAR AT WALL OPENINGS A MINIMUM OF 2'-0" PAST THE OPENING AT ALL CORNERS, UNLESS NOTED. AT WINDOWS PROVIDE A MINIMUM OF 2#4 BARS AT THE SILL OF THE WINDOWS.

9.15 AT CMU PARTITIONS OVER 8'-0" TALL, SUPPORTED BY SLAB ON GRADE, PROVIDE THICKENED SLAB PER TYPICAL DETAILS.

9.16 PROVIDE WALL TOP SUPPORT AT 8'-0" OC FOR ALL INTERIOR NON-LOAD BEARING CMU WALLS WHERE CONTINUOUS WALL SPAN BETWEEN PERPENDICULAR BRACING WALLS EXCEEDS 20'-0".

9.17 GROUT SHALL COMPLY WITH TABLE 7 OF ACI 530.1/ASCE 6/TMS 602 FOR DIMENSIONS OF GROUT SPACES AND POUR HEIGHTS.

9.18 PROVIDE HORIZONTAL JOINT REINFORCING IN REINFORCED MASONRY WALLS AS DIRECTED BY THE ARCHITECT. AT WALL CORNERS AND INTERSECTIONS, PROVIDE PREFABRICATED T AND L SHAPES, FIELD BENDING IS NOT PERMITTED. MINIMUM OF LADDER TYPE ZINC COATED CONFORMING TO ASTM A82 HOHMANN & BARNARD 220 LADDER-MESH OR EQUIVALENT AT EVERY OTHER BLOCK COURSE ABOVE FOOTING. REINFORCEMENT SHOULD CONSIST OF TWO OR MORE LONGITUDINAL WIRES, NO. 9 GAUGE OR LARGER, WELDED WITH NO. 9 GAUGE OR LARGER CROSS WIRES. LAP SPLICE HORIZONTAL JOINT REINFORCING A MINIMUM OF 12".

9.19 PROVIDE DOVETAIL ANCHORS AT 16" O/C, UNLESS NOTED OTHERWISE, WHERE MASONRY WALLS ABUT CONCRETE SURFACES.

9.20 PROVIDE GROUT FILLED U-BLOCK AT TOP OF ALL CMU WALLS REINFORCED WITH 2 # 4 BARS CONTINUOUS, UNLESS NOTED.

9.21 WHERE MASONRY WALLS SUPPORT EARTH ON BOTH SIDES, BACKFILL EACH SIDE SIMULTANEOUSLY.

9.22 WHERE TOP OF FOOTING SUPPORTING MASONRY WALLS IS MORE THAN 2'-8" BELOW FINISH FLOOR PROVIDE #6@16, UP TO THE FINISH FLOOR ELEVATION, IN ADDITION TO SPECIFIED REINFORCEMENT.

9.23 CONDUITS OR CONDENSATE DRAIN LINES UP TO 2" IN OUTSIDE DIAMETER MAY EXTEND CONT THRU MASONRY BOND BEAMS. COORDINATE WITH MECHANICAL OR ELECTRICAL DRAWINGS FOR SIZE AND LOCATION. DO NOT INTERRUPT CONTINUOUS REINFORCING STEEL IN PLACEMENT OF DRAIN OR CONDUIT LINES.

9.24 THE MASONRY WALLS ARE "NON-SELF-SUPPORTING". ADEQUATE TEMPORARY SUPPORT MUST BE PROVIDED BY THE CONTRACTOR UNTIL REQUIRED CONNECTIONS OR ELEMENTS ARE IN PLACE. BRACING SHALL BE PER THE FOLLOWING, AND CONTRACTOR SHALL PROVIDE ADDED REINFORCING AND GROUT IF REQUIRED BY THE BRACING.

A. THE "2012 STANDARD PRACTICE FOR BRACING MASONRY WALLS UNDER CONSTRUCTION".
B. THE "MASONRY WALL BRACING HANDBOOK" AS PUBLISHED BY THE MASONRY CONTRACTORS ASSOCIATION OF AMERICA (MCAA) SHOULD BE USED IN CONJUNCTION WITH THE "STANDARD PRACTICE".

9.25 CONTROL JOINTS IN CMU WALLS SHALL BE DISCONTINUOUS AT MASONRY BOND BEAMS. BOND BEAM REINFORCING SHALL EXTEND CONTINUOUS WITH 48 BAR DIAMETER LAPS AND CORNER BARS. SEE TYPICAL DETAILS FOR ADDITIONAL INFORMATION.

10.0 POST-INSTALLED ANCHORS AND REINFORCING

10.1 POST-INSTALLED ANCHORS AND/OR REINFORCING SHALL ONLY BE USED WHERE SPECIFIED ON THE CONSTRUCTION DOCUMENTS. THE CONTRACTOR SHALL OBTAIN APPROVAL FROM THE ENGINEER-OF-RECORD PRIOR TO INSTALLING POST-INSTALLED ANCHORS AND/OR REINFORCING IN PLACE OF MISSING OR MISPLACED CAST-IN-PLACE ANCHORS AND/OR REINFORCING.

10.2 THE BELOW PRODUCTS ARE THE DESIGN BASIS FOR THIS PROJECT. PRODUCT DIAMETER AND EMBEDMENT SHALL BE SHOWN IN THE DETAILS.

10.3 FOR ANCHORING INTO CONCRETE:

A. MECHANICAL ANCHORS SHALL HAVE BEEN TESTED IN ACCORDANCE WITH ACI 355.2 AND ICC-ES AC193 FOR CRACKED CONCRETE AND SEISMIC APPLICATIONS. PRE-APPROVED PRODUCTS INCLUDE:

1. SIMPSON STRONG-TIE "TITEN-HD" (ICC-ES ESR-2713)
2. SIMPSON STRONG-TIE "STRONG-BOLT 2" (ICC-ES ESR-3037)
3. SIMPSON STRONG-TIE "TORQ-CUT" (ICC-ES ESR-2705)
4. SIMPSON STRONG-TIE "TITEN-HD ROD HANGER" (ICC-ES ESR-2713)
5. HILTI KWIK HUS-EZ AND KWIK HUS EZ-I SCREW ANCHORS (ICC ESR-3027)
6. HILTI KWIK BOLT-TZ EXPANSION ANCHORS (ICC ESR-1917)
7. HILTI KWIK BOLT 3 EXPANSION ANCHORS (UNCRACKED CONCRETE ONLY) (ICC ESR-2302)
8. HILTI HDA UNDERCUT ANCHORS (ICC ESR 1546)
9. HILTI HSL-3 EXPANSION ANCHORS (ICC ESR 1545)
10. DEWALT SCREW-BOLT+ (ICC-ES ESR-3889)
11. DEWALT POWER-STUD+ SD2 (ICC-ES ESR-2502)
12. DEWALT POWER-STUD SD1 (ICC-ES ESR-2818)
13. DEWALT HANGERMATE+ (ICC-ES ESR-3889)
14. DEWALT ATOMIC+ UNDERCUT (ICC-ES ESR-3067)
15. DEWALT POWER-BOLT+ (ICC-ES ESR-3260)

B. MECHANICAL ANCHORS FOR USE IN THE UNDER SIDE OF NORMAL WEIGHT HOLLOW CORE AND POST TENSION SLAB WHERE EMBEDMENT DEPTH MUST NOT EXCEED ¾". PRE-APPROVED PRODUCTS INCLUDE:

1. DEWALT MINI-UNDERCUT+ (ICC-ES ESR-3912)
2. HILTI HDP-P TZ DROP-IN ANCHOR (ICC ESR-4236)

C. ADHESIVE FOR REBAR AND ANCHORS SHALL HAVE BEEN TESTED IN ACCORDANCE WITH ACI 355.4 AND ICC-ES AC308 FOR CRACKED CONCRETE AND SEISMIC APPLICATIONS. DESIGN ADHESIVE BOND STRENGTH HAS BEEN BASED ON ACI 355.4 TEMPERATURE CATEGORY B WITH INSTALLATIONS INTO DRY HOLES DRILLED USING A CARBIDE DRILL BIT INTO CRACKED CONCRETE THAT HAS CURED FOR AT LEAST 21 DAYS. ADHESIVE ANCHORS REQUIRING CERTIFIED INSTALLATIONS, SUCH AS HORIZONTAL TO UPWARD INCLINED ORIENTATION UNDER SUSTAINED TENSION LOADING, SHALL BE INSTALLED BY A CERTIFIED ADHESIVE ANCHOR INSTALLER PER ACI 318-19 26.7.2 & 26.7.2(e). INSTALLATIONS REQUIRING CERTIFIED INSTALLERS SHALL BE INSPECTED PER ACI 318-19 26.7.2 & 26.7.2(e). PRE-APPROVED PRODUCTS INCLUDE:

1. SIMPSON STRONG-TIE "SET-3G" (ICC-ES ESR-4057)
2. SIMPSON STRONG-TIE "AT-XP" (IAPMO-UES ER-263)
3. SIMPSON STRONG-TIE "SET-XP" (ICC-ES ESR-2508)
4. HILTI HIT-HY 200 V3 SAFE SET SYSTEM WITH HILTI HOLLOW DRILL BIT AND VACUUM WITH CONTINUOUSLY DEFORMED REBAR (ICC ESR-4868)
5. HILTI HIT-RE 500 V3 SAFE SET SYSTEM WITH HILTI HOLLOW DRILL BIT AND VACUUM WITH CONTINUOUSLY DEFORMED REBAR (ICC ESR-3814)
6. HILTI KWIK-X DUAL ACTION ANCHOR SAFESET SYSTEM WITH KHC CAPSULE ADHESIVE AND KWIK-HUS EZ (ICC ESR-5065)
7. DEWALT PURE110+ FOR WARM WEATHER/SLOW CURE (ICC-ES ESR-3298); FOR ANCHORS AND REBAR: WHEN DEWALT DUSTX+ EXTRACTION SYSTEM IS USED, TRADITIONAL HOLE CLEANING METHODS USING STEEL BRUSHES AND COMPRESSED DRY AIR MAY BE COMPLETELY OMITTED PER ICC-ES ESR-3298
8. DEWALT AC200+ FOR COLD WEATHER/RAPID CURE (ICC-ES ESR-4027); FOR ANCHORS AND REBAR: WHEN DEWALT DUSTX+ EXTRACTION SYSTEM IS USED, TRADITIONAL HOLE CLEANING METHODS USING STEEL BRUSHES AND COMPRESSED DRY AIR MAY BE COMPLETELY OMITTED PER ICC-ES ESR-4027

D. POWER-ACTUATED FASTENERS SHALL HAVE BEEN TESTED IN ACCORDANCE WITH ICC-ES AC70. PRE-APPROVED PRODUCTS INCLUDE:

1. SIMPSON STRONG-TIE "GAS ACTUATED PINS" (ICC-ES ESR-2811)
2. SIMPSON STRONG-TIE "POWDER ACTUATED PINS" (ICC-ES ESR-2138)
3. HILTI "UNIVERSAL KNURLED SHANK FASTENERS" X-U (ICC ESR-2269)
4. DEWALT "POWER DRIVEN FASTENERS", POWDER ACTUATED (ICC-ES-ESR 2024)
5. DEWALT TRAK-IT C5, GAS ACTUATED (ICC-ES-ESR 3275)

10.4 FOR ANCHORING INTO MASONRY:

A. SOLID-GROUTED CONCRETE MASONRY

1. MECHANICAL ANCHORS SHALL HAVE BEEN TESTED IN ACCORDANCE WITH ICC-ES AC01 OR ICC-ES AC106. PRE-APPROVED PRODUCTS INCLUDE:

a. SIMPSON STRONG-TIE "TITEN-HD" & "STAINLESS STEEL TITEN HD" (ICC-ES ESR-1056)
b. SIMPSON STRONG-TIE "STRONG-BOLT 2" (IAPMO-UES ER-240)
c. SIMPSON STRONG-TIE "WEDGE-ALL" (ICC-ES ESR-1396)
d. SIMPSON STRONG-TIE "TITEN TURBO" (IAMPO-UES ER-716)
e. HILTI KH-EZ, KH-EZ CRC, KH-EZ SS316, KH-EZ C, AND KH-EZ P SCREW ANCHORS (ICC ESR-3056)
f. HILTI KWIK BOLT-1 EXPANSION ANCHOR (ICC ER-677)
g. HILTI KWIK BOLT-TZ2 EXPANSION ANCHOR (ICC ESR-4561)
h. DEWALT "SCREW-BOLT+" (ICC-ES ESR 4042)
i. DEWALT "POWER-STUD+ SD1" (ICC-ES ESR 2966)

2. ADHESIVE FOR REBAR AND ANCHORS SHALL HAVE BEEN TESTED IN ACCORDANCE WITH ICC-ES AC58. PRE-APPROVED PRODUCTS INCLUDE:

a. SIMPSON STRONG-TIE "AT-XP" (IAPMO-UES ER-281)
b. SIMPSON STRONG-TIE "SET-XP" (IAPMO-UES ER-265)
c. HILTI HIT-HY 270 SAFE SET SYSTEM WITH HILTI HOLLOW DRILL BIT AND VACUUM (ICC ESR-4143); STEEL ANCHOR ELEMENT SHALL BE HILTI-HAS CONTINUOUSLY THREADED ROD OR CONTINUOUSLY DEFORMED STEEL REBAR
d. HILTI HIT-HY 200 V3 SAFE SET SYSTEM WITH HILTI HOLLOW DRILL BIT AND VACUUM (ICC ESR-4878)
e. DEWALT AC100+ GOLD (ICC-ES ESR-3200)

3. POWER-ACTUATED FASTENERS SHALL HAVE BEEN TESTED IN ACCORDANCE WITH ICC-ES AC70. PRE-APPROVED PRODUCTS INCLUDE:

a. SIMPSON STRONG-TIE "GAS ACTUATED PINS" (ICC-ES ESR-2811)
b. SIMPSON STRONG-TIE "POWDER ACTUATED PINS" (ICC-ES ESR-2138)
c. HILTI "UNIVERSAL KNURLED SHANK FASTENERS" X-U (ICC ESR-2269)
d. DEWALT TRAK-IT C5, GAS ACTUATED (ICC-ES-ESR 3275)

B. UNREINFORCED BRICK MASONRY (URM): ADHESIVE FOR REBAR AND ANCHORS WITH SCREEN TUBES SHALL HAVE BEEN TESTED FOR USE IN ACCORDANCE WITH ICC-ES AC60. THE APPROPRIATE SCREEN TUBE SHALL BE USED AS RECOMMENDED BY THE ADHESIVE MANUFACTURER. PRE-APPROVED PRODUCTS INCLUDE:

1. SIMPSON STRONG-TIE "ET-HP" (ICC-ES ESR-3638)
2. HILTI HIT-HY 270 SAFE SET SYSTEM WITH HILTI HOLLOW DRILL BIT AND VACUUM (ICC ESR-4143); STEEL ANCHOR ELEMENT SHALL BE HILTI-HAS CONTINUOUSLY THREADED ROD OR CONTINUOUSLY DEFORMED STEEL REBAR. THE APPROPRIATE SIZE SCREEN TUBE SHALL BE USED PER ADHESIVE MANUFACTURER'S PRINTED INSTALLATION INSTRUCTIONS.
3. DEWALT "AC100+ GOLD" (ICC-ES ESR-4105)

10.5 FOR FASTENING INTO STEEL: POWER-ACTUATED FASTENERS SHALL HAVE BEEN TESTED IN ACCORDANCE WITH ICC-ES AC70. PRE-APPROVED PRODUCTS INCLUDE:

A. SIMPSON STRONG-TIE "GAS ACTUATED PINS" (ICC-ES ESR-2811)
B. SIMPSON STRONG-TIE "POWDER ACTUATED PINS" (ICC-ES ESR-2138)
C. HILTI FASTENERS IN LIEU OF #12 TEK SCREWS:

1. HILTI S-MD 12-24X1-5/8 HWH5 SCREWS FOR STUDS, JOISTS AND BEAMS 16 GA ≤ TF ≤ 1/4"
2. HILTI X-HSN 24 PINS FOR JOISTS AND BEAM 1/8" ≤ TF ≤ 3/8"
3. HILTI X-ENP 19 L15 PINS FOR BEAMS TF ≥ 1/4".

D. DEWALT "POWER DRIVEN FASTENERS", POWDER ACTUATED (ICC-ES-ESR 2024)
E. DEWALT "TRAK-IT C5", GAS ACTUATED (ICC-ES-ESR 3275)

10.6 REFER TO THE PROJECT BUILDING CODE AND/OR EVALUATION REPORT FOR SPECIAL INSPECTIONS AND PROOF LOAD REQUIREMENTS.

10.7 SUBSTITUTION REQUESTS FOR PRODUCTS OTHER THAN THOSE LISTED MAY BE SUBMITTED BY THE CONTRACTOR TO THE EOR FOR REVIEW NO LESS THAN TWO WEEKS PRIOR TO BID. SUBSTITUTIONS WILL ONLY BE CONSIDERED FOR PRODUCTS HAVING A RESEARCH REPORT RECOGNIZING THE PRODUCT FOR THE APPROPRIATE APPLICATION UNDER THE PROJECT BUILDING CODE. SUBSTITUTION REQUESTS SHALL INCLUDE CALCULATIONS PREPARED & SEALED BY A REGISTERED PROFESSIONAL ENGINEER THAT DEMONSTRATE THE SUBSTITUTED PRODUCT IS CAPABLE OF ACHIEVING THE EQUIVALENT. ADHESIVE ANCHOR EVALUATION WILL ALSO CONSIDER CREEP, IN-SERVICE TEMPERATURE AND INSTALLATION TEMPERATURE.

10.8 INSTALL ANCHORS PER THE MANUFACTURER PRINTED INSTRUCTIONS (MPII), OR AS INCLUDED IN THE ANCHOR PACKAGING.

10.9 OVERHEAD ADHESIVE ANCHORS MUST BE INSTALLED USING THE MANUFACTURER INSTRUCTIONS.

10.10 THE CONTRACTOR SHALL ARRANGE FOR AN ANCHOR MANUFACTURER'S REPRESENTATIVE TO PROVIDE ONSITE INSTALLATION TRAINING FOR ALL OF THEIR ANCHORING PRODUCTS SPECIFIED. THE STRUCTURAL ENGINEER OF RECORD MUST RECEIVE DOCUMENTED CONFIRMATION THAT ALL OF THE CONTRACTOR'S PERSONNEL WHO INSTALL ANCHORS ARE TRAINED PRIOR TO THE COMMENCEMENT OF INSTALLING ANCHORS.

10.11 THE CONTRACTOR SHALL COORDINATE WITH THE OWNERS SPECIAL INSPECTION AGENCY FOR CONTINUOUS SPECIAL INSPECTION OF ADHESIVE ANCHORS AND PERIODIC INSPECTION OF MECHANICAL ANCHORS, SEE SPECIAL INSPECTION SCHEDULE FOR ADDITIONAL INFORMATION.

10.12 ANCHOR CAPACITY IS DEPENDANT UPON SPACING BETWEEN ADJACENT ANCHORS AND PROXIMITY OF ANCHORS TO EDGE OF CONCRETE. INSTALL ANCHORS IN ACCORDANCE WITH SPACING AND EDGE CLEARANCES INDICATED ON THE DRAWINGS.

10.13 EXISTING REINFORCING BARS AND/OR CONDUIT IN THE CONCRETE STRUCTURE MAY CONFLICT WITH SPECIFIC ANCHOR LOCATIONS. CARE SHALL BE TAKEN IN PLACING POST-INSTALLED ANCHORS AND/OR REINFORCING TO AVOID CONFLICTS WITH EXISTING REBAR AND/OR CONDUIT. UNLESS NOTED ON THE DRAWINGS THAT THE BARS CAN BE CUT, THE CONTRACTOR SHALL REVIEW THE EXISTING STRUCTURAL DRAWINGS AND SHALL UNDERTAKE TO LOCATE THE POSITION OF THE REINFORCING BARS AT THE LOCATIONS OF THE CONCRETE ANCHORS, BY HILTI FERROSCAN, GPR, X-RAY, CHIPPING OR OTHER MEANS.

11.0 SHOP DRAWINGS (SUBMITTALS)

11.1 THE GENERAL CONTRACTOR SHALL SUBMIT FOR REVIEW AN ELECTRONIC SET OF DESIGN CALCULATIONS FOR ITEMS LISTED BELOW; CALCULATIONS SHALL BEAR THE SEAL OF A PROFESSIONAL ENGINEER REGISTERED IN THE STATE WHERE THE PROJECT IS LOCATED:

A. STRUCTURAL STEEL BEAM CONNECTION DESIGN
B. STEEL STAIR FRAMING AND CONNECTIONS DESIGN
C. ARCHITECTURAL PRECAST (SUBMIT FOR RECORD ONLY)
D. FORMWORK AND SHORING (SUBMIT FOR RECORD ONLY)
E. PRECAST CONCRETE HOLLOW CORE SLABS
F. AUTOCLAVED AERATED CONCRETE (AAC) PANELS
G. COLD-FORMED STEEL WALL PANEL FRAMING
H. COLD-FORMED STEEL FRAMING
I. COLD-FORMED STEEL ROOF TRUSSES
J. FLOOR AND ROOF WOOD TRUSSES

11.2 SUBMIT ALL SHOP DRAWINGS ELECTRONICALLY. ELECTRONIC COPIES WILL BE RETURNED TO THE ARCHITECT. REPRODUCTIONS REQUIRED BY THE CONTRACTOR ARE THE RESPONSIBILITY OF THE CONTRACTOR AND SHOULD BE MADE AFTER THE ELECTRONIC COPIES ARE RETURNED.

11.3 ALL SHOP DRAWINGS SHALL BE ACCOMPANIED BY A PROPERLY COMPLETED SUBMITTAL CHECKLIST, WHERE REQUIRED BY THE RELEVANT SPECIFICATION SECTION.

11.4 WHERE SHOP DRAWINGS, CALCULATIONS, OR SUBMITTALS ARE CALLED FOR IN THE PROJECT DOCUMENTS (DRAWINGS AND SPECIFICATIONS) AND ARE NOT PROVIDED BY THE CONTRACTOR, THE CONTRACTOR ASSUMES TOTAL RESPONSIBILITY FOR THE DESIGN AND ASSOCIATED WORK.

11.5 ENGINEER'S SHOP DRAWING REVIEW IS LIMITED TO REVIEW FOR GENERAL CONFORMANCE WITH THE DESIGN INTENT REFLECTED IN THE STRUCTURAL PORTION OF THE CONTRACT DOCUMENTS. THIS REVIEW DOES NOT RELIEVE THE CONTRACTOR FROM COMPLIANCE WITH THE DRAWINGS, SPECIFICATIONS OR OTHER PROJECT CONTRACT DOCUMENTS. NO RESPONSIBILITY IS ASSUMED OR IMPLIED FOR THE CORRECTNESS OF DIMENSIONS OR DETAILS. THIS REVIEW DOES NOT AUTHORIZE CHANGES TO THE CONTRACT SUM UNLESS STATED IN A SEPARATE WRITTEN FORM OR CHANGE ORDER. CONTRACTOR SHALL CONFIRM AND CORRELATE ALL QUANTITIES AND DIMENSIONS, SELECT FABRICATION PROCESSES AND TECHNIQUES OF CONSTRUCTION, COORDINATE HIS WORK WITH THAT OF OTHER TRADES, AND PERFORM HIS WORK IN A SAFE AND SATISFACTORY MANNER. CONTRACTOR SHALL ALSO REFER TO THE REQUIREMENTS OF THE GENERAL AND SUPPLEMENTARY GENERAL CONDITIONS.

11.6 ALL SUBMITTALS: IF THERE ARE QUESTIONS, CLARIFICATIONS, MODIFICATIONS, OR ITEMS WHERE INFORMATION, A RESPONSE, OR APPROVAL IS REQUESTED, SUCH ITEMS SHALL BE WRITTEN ON THE TRANSMITTAL OR COVER SHEET. WHERE SUBMITTAL CHECKLISTS ARE REQUIRED BY THE RELEVANT SPECIFICATION, THE AFOREMENTIONED INFORMATION MUST BE INDICATED ON THE SUBMITTAL CHECKLIST IN ACCORDANCE WITH THE RELEVANT SPECIFICATION. INDICATING SUCH ITEMS ON THE SHOP DRAWINGS, WITHIN ANY CALCULATIONS, OR PRODUCT DATA IS NOT SUFFICIENT. WHERE SUCH ITEMS ARE NOT SPECIFICALLY LISTED ON THE TRANSMITTAL, COVER SHEET, OR CHECKLIST IN ACCORDANCE WITH THESE GENERAL NOTES AND THE SPECIFICATIONS, SUCH ITEMS ARE NOT TO BE CONSIDERED APPROVED OR CONSIDERED. IF A QUESTION, CLARIFICATION, MODIFICATION, OR REQUEST FOR INFORMATION IS MADE AND NOT SPECIFICALLY RESPONDED TO BY STRUCTURAL DESIGN GROUP, NO APPROVAL OR CONSENT SHALL BE ASSUMED. THE CONTRACTOR SHALL ASSUME TOTAL LIABILITY AND RESPONSIBILITY IN ALL CASES WHERE SPECIFIC WRITTEN RESPONSE FROM STRUCTURAL DESIGN GROUP IS NOT OBTAINED, REGARDLESS OF ANY OTHER ACTIONS TAKEN BY STRUCTURAL DESIGN GROUP.

11.7 SHOP DRAWINGS FOR ALL STRUCTURAL ELEMENTS SHOWN ON THE CONTRACT DOCUMENTS MUST BE SUBMITTED BY THE GENERAL CONTRACTOR AND REVIEWED BY THE S.E.R. SHOULD THE OWNER OR CONTRACTOR FAIL TO OBTAIN THE S.E.R'S REVIEW OF THE SHOP DRAWINGS, THE S.E.R. WILL NOT ACCEPT RESPONSIBILITY FOR THE DESIGN AND CERTIFICATION OF THIS PROJECT. PRIOR TO SUBMISSION, THE CONTRACTOR SHALL REVIEW SHOP DRAWINGS FOR COMPLIANCE WITH THE CONTRACT DOCUMENTS. SHOP DRAWINGS SHALL NOT BE PRODUCED PRIOR TO FINAL CONSTRUCTION SET.

11.8 DO NOT FABRICATE PRIOR TO SHOP DRAWING'S REVIEW.

11.9 ENGINEERING DESIGN AND SHOP DRAWINGS FOR FLOOR AND ROOF TRUSS SYSTEMS ALONG WITH LAYOUT PLANS ARE REQUIRED TO BE SUBMITTED TO THE BUILDING OFFICIAL FOR REVIEW PRIOR TO CONSTRUCTION.

SDG
STRUCTURAL DESIGN GROUP
300 Chase Park South, Suite 125
Hoover, AL 35244
tel 205-824-5200
fax 205-824-5280
Job Number 23-187

LATHAN
ARCHITECTS

CLASSROOM ADDITION FOR
MARGARET ELEMENTARY SCHOOL
680 COUNTY ROAD 12, ODENVILLE, ALABAMA 35120
ST. CLAIR COUNTY BOARD OF EDUCATION

ALABAMA REGISTERED No. 22596 PROFESSIONAL ENGINEER H. CRAIG WINN
H. Craig Winn, P.E.
11-2-2024

SHEET TITLE:
GENERAL NOTES CONTINUED

PROJ. MGR.:	HCW
DRAWN:	ABS
DATE:	01-12-2024

REVISIONS

JOB NO. 23-41

SHEET NO:
S1.1
2 OF 10

0 1" 2"

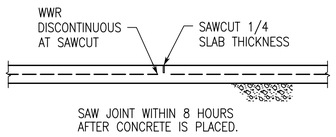

SAWED JOINT

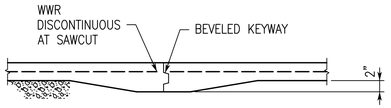

KEYED JOINT

SLAB CONTROL JOINT DETAILS

TYPICAL
JOINT TYPE IS OPTIONAL

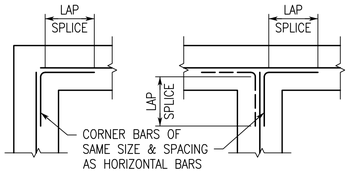

SINGLE LAYER REINFORCEMENT

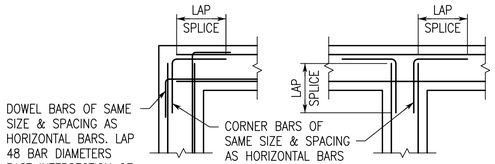

DOUBLE LAYER REINFORCEMENT

NOTE: ALL LAP SPLICES CLASS "B" TENSION

WALL AND FOOTING CORNER REINFORCING DETAIL

TYPICAL

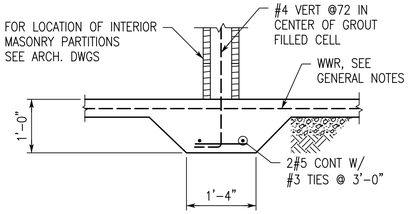

THICKENED SLAB ON GRADE DETAIL

TYPICAL

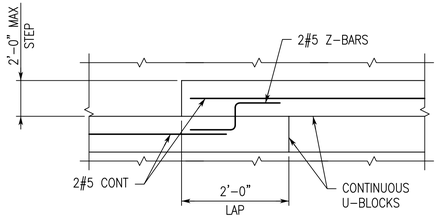

MASONRY BOND BEAM STEP DETAIL

TYPICAL

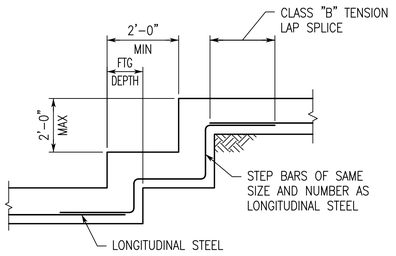

FOOTING STEP DETAIL

TYPICAL

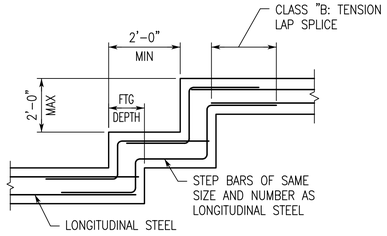

FOOTING STEP DETAIL

TYPICAL

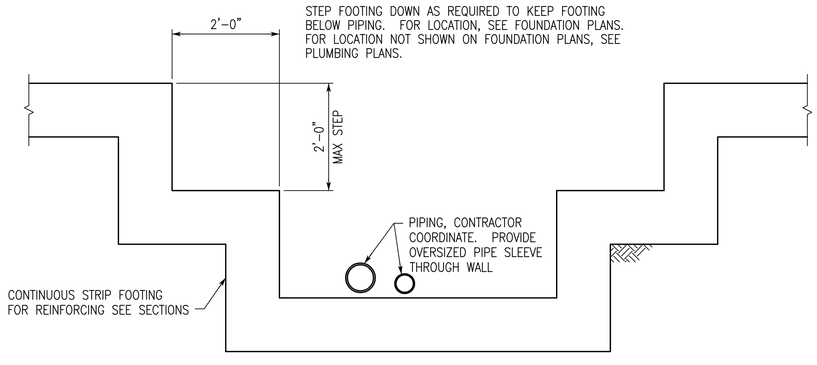

FOOTING/FOUNDATION WALL AT PIPING

TYPICAL

COMPONENTS AND CLADDING WIND LOADS FOR WALLS (PSF)

114 MPH VELOCITY (3-SEC. GUST)	EFFECTIVE WIND AREA (FT^2)	ZONES 4 & 5	ZONES 4 (Int.)	ZONES 5 (Edge)
	10	25.9	-28.1	-34.6
	20	24.8	-26.9	-32.3
	50	23.3	-25.4	-29.3
	100	22.1	-24.2	-27.0
	200	21.0	-23.1	-24.7
	500	19.4	-21.6	-21.6

NOTES:
1. WIDTH OF EDGE STRIP 'a' = 3'-9".
2. VALUES SHOWN ABOVE HAVE BEEN ADJUSTED FOR BUILDING HEIGHT AND EXPOSURE ACCORDING TO ASCE 7-16 STANDARD TABLE 30.3-1. VALUES SHOWN ARE ULTIMATE.
3. PLUS AND MINUS SIGNS SIGNIFY PRESSURES ACTING TOWARD AND AWAY FROM THE BUILDING SURFACES.
4. EFFECTIVE WIND AREA IS THE SPAN LENGTH MULTIPLIED BY AN EFFECTIVE WIDTH THAT NEED NOT BE LESS THAN ONE-THIRD THE SPAN LENGTH.

COMPONENTS AND CLADDING WIND LOADS FOR STORM SHELTER WALLS (PSF)

H = 14'-4" 0.25:12 Roof Slope	EFFECTIVE WIND AREA (FT^2)	250 MPH VELOCITY (3-SEC. GUST) ZONES 4 & 5	ZONES 4 (Int.)	ZONES 5 (Edge)
	10	197.0	-209.2	-245.9
	20	190.5	-202.6	-233.0
	50	181.9	-194.0	-215.9
	100	175.4	-187.4	-202.9
	200	168.9	-180.9	-189.9
	500	160.3	-172.5	-172.5

NOTES:
1. WIDTH OF EDGE STRIP 'a' = 3'-0".
2. VALUES SHOWN ABOVE HAVE BEEN ADJUSTED FOR BUILDING HEIGHT AND EXPOSURE ACCORDING TO ASCE 7-16 STANDARD TABLE 30.3-1. VALUES SHOWN ARE ULTIMATE.
3. PLUS AND MINUS SIGNS SIGNIFY PRESSURES ACTING TOWARD AND AWAY FROM THE BUILDING SURFACES.
4. EFFECTIVE WIND AREA IS THE SPAN LENGTH MULTIPLIED BY AN EFFECTIVE WIDTH THAT NEED NOT BE LESS THAN ONE-THIRD THE SPAN LENGTH.
5. WIND PRESSURES IN THESE TABLES SHALL BE MULTIPLIED BY 0.6 TO OBTAIN NOMINAL WIND PRESSURES.

COMPONENTS AND CLADDING WIND LOADS FOR ROOF (PSF)

		ROOF					OVERHANG			
114 MPH VELOCITY (3-SEC. GUST)	EFFECTIVE WIND AREA (FT^2)	Positive Max. Net Pressure 'p' (PSF)	Zone 1' (Int.)	Zone 1 (Int.)	Zone 2 (Edge)	Zone 3 (Corner)	Zone 1' & 1 (Int.) - Max. Net Pressure 'p' (PSF)	Zone 2 (Edge) - Max. Net Pressure 'p' (PSF)	Zone 3 (Corner) - Max. Net Pressure 'p' (PSF)	
	10	16.0	-25.9	-45.1	-59.5	-81.2	-40.8	-55.2	-76.8	
	20	16.0	-25.9	-42.2	-55.7	-73.5	-40.1	-50.1	-67.9	
	50	16.0	-25.9	-38.2	-50.7	-63.4	-39.1	-43.4	-56.1	
	100	16.0	-25.9	-35.2	-46.8	-55.7	-38.4	-38.3	-47.2	
	200	16.0	-22.3	-32.3	-43.0	-48.1	-32.2	-33.2	-38.2	
	500	16.0	-17.5	-28.3	-37.9	-37.9	-24.0	-26.4	-26.4	

NOTES:
1. WIDTH OF EDGE STRIP 'a' = 3'-9".
2. VALUES SHOWN ABOVE HAVE BEEN ADJUSTED FOR BUILDING HEIGHT AND EXPOSURE ACCORDING TO ASCE 7-16 STANDARD TABLE 30.3-1. VALUES SHOWN ARE ULTIMATE.
3. PLUS AND MINUS SIGNS SIGNIFY PRESSURES ACTING TOWARD AND AWAY FROM THE BUILDING SURFACES.
4. EFFECTIVE WIND AREA IS THE SPAN LENGTH MULTIPLIED BY AN EFFECTIVE WIDTH THAT NEED NOT BE LESS THAN ONE-THIRD THE SPAN LENGTH.
5. CONSIDER 5 PSF MINIMUM DEAD LOAD FOR UPLIFT CALCULATIONS FOR ROOF TRUSSES AND 2 PSF MINIMUM DEAD LOAD FOR UPLIFT CALCULATIONS FOR ROOF DECK.

COMPONENTS AND CLADDING WIND LOADS FOR STORM SHELTER ROOF (PSF)

250 MPH VELOCITY (3-SEC. GUST)		ROOF					OVERHANG		
H = 14'-4" 0.25:12 Roof Slope	EFFECTIVE WIND AREA (FT^2)	Positive Max. Net Pressure 'p' (PSF)	Zone 1' (Int.) (PSF)	Zone 1 (Int.) (PSF)	Zone 2 (Edge) (PSF)	Zone 3 (Corner) (PSF)	Zone 1' & 1 (Int.) - Max. Net Pressure 'p' (PSF)	Zone 2 (Edge) - Max. Net Pressure 'p' (PSF)	Zone 3 (Corner) - Max. Net Pressure 'p' (PSF)
	10	115.5	-197.0	-305.6	-387.1	-509.4	-283.6	-312.4	-434.7
	20	111.4	-197.0	-288.8	-365.6	-466.1	-226.8	-283.6	-384.1
	50	106.0	-197.0	-266.5	-365.6	-408.8	-221.4	-245.4	-317.3
	100	101.9	-197.0	-249.7	-315.2	-365.6	-217.3	-216.5	-266.8
	200	101.9	-176.5	-232.8	-298.8	-322.2	-182.2	-187.6	-216.2
	500	101.9	-149.5	-210.6	-265.9	-265.9	-135.8	-149.4	-149.4

NOTES:
1. WIDTH OF EDGE STRIP 'a' = 3'-0".
2. VALUES SHOWN ABOVE HAVE BEEN ADJUSTED FOR BUILDING HEIGHT AND EXPOSURE ACCORDING TO ASCE 7-16 STANDARD TABLE 30.3-1. VALUES SHOWN ARE ULTIMATE.
3. PLUS AND MINUS SIGNS SIGNIFY PRESSURES ACTING TOWARD AND AWAY FROM THE BUILDING SURFACES.
4. EFFECTIVE WIND AREA IS THE SPAN LENGTH MULTIPLIED BY AN EFFECTIVE WIDTH THAT NEED NOT BE LESS THAN ONE-THIRD THE SPAN LENGTH.
5. HOLLOW CORE MANUFACTURER IS TO DESIGN SLAB PANELS FOR DEAD LOADS, LIVE LOADS, AND WIND LOADS (DOWNWARD AND UPLIFT) AS INDICATED IN GENERAL NOTES, TYPICAL DETAILS, PLAN NOTES, AND SECTION NOTES, IN ADDITION TO 20 PSF COLLATERAL LOAD AND SELF-WEIGHTS.
6. WIND PRESSURES IN THESE TABLES SHALL BE MULTIPLIED BY 0.6 TO OBTAIN NOMINAL WIND PRESSURES.

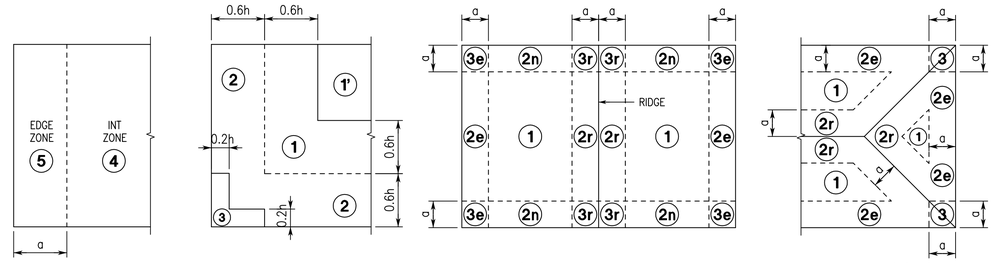

WALLS FLAT ROOFS GABLE ROOFS HIP ROOFS

WALL AND ROOF WIND PRESSURE ZONE DIAGRAMS

TYPICAL

SDG
STRUCTURAL DESIGN GROUP
300 Chase Park South, Suite 125
Hoover, AL 35244
tel 205-824-5200
fax 205-824-5280
Job Number 23-187

LATHAN ARCHITECTS

CLASSROOM ADDITION FOR
MARGARET ELEMENTARY SCHOOL
680 COUNTY ROAD 12, ODENVILLE, ALABAMA 35120
ST. CLAIR COUNTY BOARD OF EDUCATION

ALABAMA REGISTERED No. 22596 PROFESSIONAL ENGINEER CRAIG WINN
H. Craig Winn P.E.
1-12-2024

SHEET TITLE:
TYPICAL DETAILS

PROJ. MGR.:	HCW
DRAWN:	ABS
DATE:	01-12-2024
REVISIONS	

JOB NO. 23-41
SHEET NO:
S1.2
3 OF 10

0 1" 2"

SDG
STRUCTURAL DESIGN GROUP
300 Chase Park South, Suite 125
Hoover, AL 35244
tel 205-824-5200
fax 205-824-5280
Job Number 23-187

LATHAN
ARCHITECTS

CLASSROOM ADDITION FOR
MARGARET ELEMENTARY SCHOOL
680 COUNTY ROAD 12, ODENVILLE, ALABAMA 35120
ST. CLAIR COUNTY BOARD OF EDUCATION

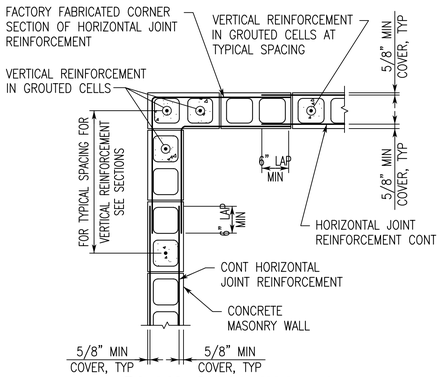

PLAN SHOWING JOINT REINFORCEMENT AT WALL CORNER
TYPICAL

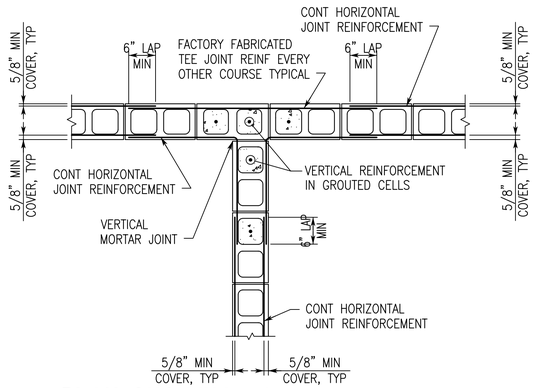

PLAN SHOWING JOINT REINFORCING AT STRUCTURAL WALL INTERSECTION
TYPICAL

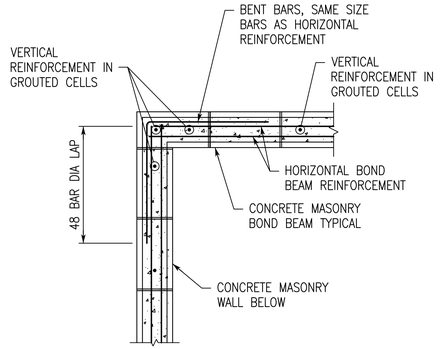

PLAN SHOWING BOND BEAM REINFORCEMENT AT WALL CORNER
TYPICAL

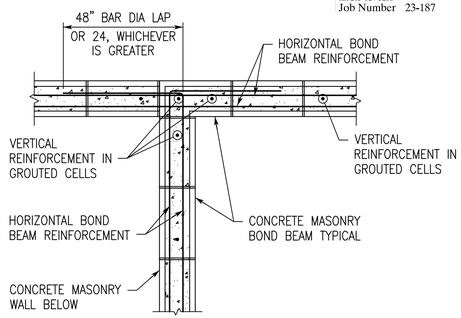

PLAN SHOWING BOND BEAM AT STRUCTURAL WALL INTERSECTION
TYPICAL

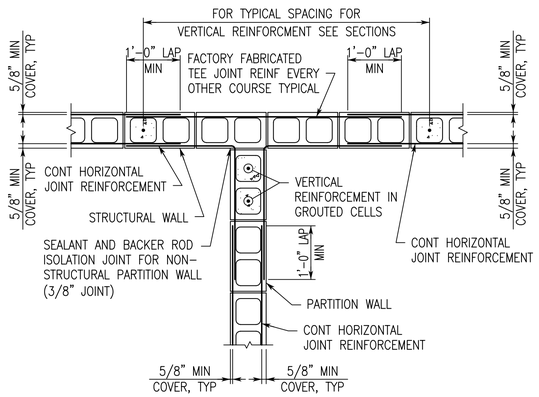

PARTITION WALLS ABUTTING STRUCTURAL WALLS
TYPICAL

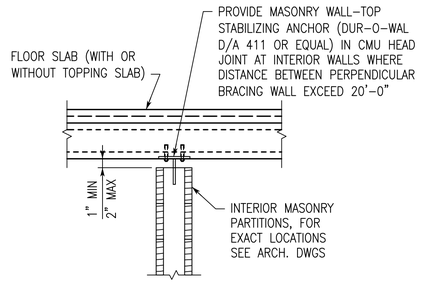

INTERIOR MASONRY WALL BRACING DETAILS
TYPICAL

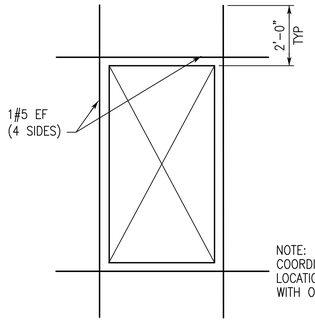

WALL OPENING REINFORCMENT DETAIL
TYPICAL

VENEER LINTEL SCHEDULE

MAXIMUM OPENING WIDTH	STEEL FOR EACH 4" OF WALL THICKNESS
2'-0"	L3 1/2x3 1/2x3/8
4'-0"	L3 1/2x3 1/2x3/8
6'-0"	L5x5x3/8
8'-0"	L6x4x3/8 (LONG LEG VERTICAL)
LARGER	CONTACT ENGINEER

1. PROVIDE 8" MINIMUM BEARING FOR ALL LINTELS.
2. ALL EXPOSED LINTEL ANGLES TO BE HOT DIP GALVANIZED.

TENSION LAP SPLICE LENGTHS

BAR SIZE	f_c= 3000 PSI				f_c= 4000 PSI			
	TOP BARS		OTHER BARS		TOP BARS		OTHER BARS	
	A	B	A	B	A	B	A	B
#3	22"	28"	17"	22"	19"	24"	15"	19"
#4	29"	37"	22"	29"	25"	32"	19"	25"
#5	36"	47"	28"	36"	31"	40"	24"	31"
#6	43"	56"	33"	43"	37"	48"	29"	37"
#7	63"	81"	48"	63"	54"	70"	42"	54"
#8	72"	93"	55"	72"	62"	80"	48"	62"
#9	81"	105"	62"	81"	70"	91"	54"	70"
#10	91"	118"	70"	91"	79"	102"	61"	79"
#11	101"	131"	78"	101"	87"	113"	67"	87"

TOP BARS ARE HORIZONTAL REINFORCEMENT WITH MORE THAN 12" OF CONCRETE CAST BELOW THE REINFORCEMENT.

MASONRY REINFORCING LAP SPLICE LENGTHS

BAR SIZE (#)	CENTERED (IN.)	EDGE (IN.)
3	18.0	18.0
4	24.0	29.0
5	30.0	45.0
6	43.0	54.0
7	60.0	63.0
8	72.0	72.0
9	82.0	82.0

NOTES:
1. LAP SPLICE LENGTHS APPLY TO BOTH HORIZONTAL AND VERTICAL REINFORCING.
2. REINFORCEMENT LARGER THAN NO. 9 BAR SHALL BE SPLICED USING MECHANICAL CONNECTIONS IN ACCORDANCE WITH ACI 530 & ACI 530.1.

STORM SHELTER LOAD BEARING STACK BOND MASONRY LINTEL SCHEDULE

MAXIMUM OPENING WIDTH	LINTEL DIMENSIONS AND REINFORCING		
	DEPTH	8" WALL	12" WALL
4'-0"	24	2#5 BOT & 2#5 TOP	2#5 BOT & 2#5 TOP
6'-0"	32	2#5 BOT & 2#5 TOP	2#6 BOT & 2#6 TOP
8'-0"	48	2#6 BOT & 2#6 TOP	2#6 BOT & 2#6 TOP
10'-0"	56	2#6 BOT & 2#6 TOP	2#6 BOT & 2#6 TOP

1. PROVIDE 24" MINIMUM BEARING FOR ALL LINTELS. FILL CELLS SOLID AT EACH SIDE OF OPENING AND REINFORCE WITH MINIMUM 1#5 BAR CONTINUOUS. (JAMB BARS OF SAME SIZE AS VERTICAL WALL REINFORCING BARS.)
2. SHORE LINTEL UNTIL MORTAR AND GROUT HAVE SET AND CURED.
3. PROVIDE 16" DEEP BOND BEAM REINFORCED WITH 2#5 CONTINUOUS TOP AND BOTTOM AT THE BOTTOM OF ALL STORM SHELTER OPENINGS (DOORS, WINDOWS, LOUVERS, ETC.). EXTEND 24" PAST OPENING ON EACH SIDE OF OPENING.

LOAD BEARING STACK BOND MASONRY LINTEL SCHEDULE

MAXIMUM OPENING WIDTH	LINTEL DIMENSIONS AND REINFORCING		
	DEPTH	8" WALL	12" WALL
4'-0"	32	2#4 BOT & 2#4 TOP	2#4 BOT & 2#4 TOP
6'-0"	32	2#4 BOT & 2#4 TOP	2#5 BOT & 2#5 TOP
8'-0"	32	2#5 BOT & 2#5 TOP	2#5 BOT & 2#5 TOP
14'-0"	32	2#5 BOT & 2#5 TOP	2#5 BOT & 2#5 TOP

1. PROVIDE 24" MINIMUM BEARING FOR ALL LINTELS. FILL CELLS SOLID AT EACH SIDE OF OPENING AND REINFORCE WITH 1#5 BAR CONTINUOUS.
2. SHORE LINTEL UNTIL MORTAR AND GROUT HAVE SET AND CURED.
3. PROVIDE 8" DEEP BOND BEAM REINFORCED WITH 1#4 CONT AT BOTTOM OF ALL WINDOW OPENINGS. EXTEND 24" PAST OPENING ON EACH SIDE OF WINDOW OPENING.

NON-LOAD BEARING STACK BOND MASONRY LINTEL SCHEDULE

MAXIMUM OPENING WIDTH	LINTEL DIMENSIONS AND REINFORCING				
	DEPTH	8" WALL		12" WALL	
		REINFORCING	MAX HEIGHT OF WALL ABOVE LINTEL	REINFORCING	MAX HEIGHT OF WALL ABOVE LINTEL
2'-0"	8	1#4 BOT	20'-0"	1#4 BOT	22'-0"
4'-0"	8	1#4 BOT	10'-0"	2#4 BOT	9'-4"
6'-0"	8	1#5 BOT & 1#4 TOP	4'-0"	2#5 BOT & 2#4 TOP	4'-8"
8'-0"	16	1#6 BOT & 1#5 TOP	15'-4"	2#5 BOT & 2#4 TOP	16'-0"
10'-0"	16	1#7 BOT & 1#5 TOP	10'-0"	2#6 BOT & 2#4 TOP	12'-0"
12'-0"	16	1#8 BOT & 1#5 TOP	7'-4"	2#7 BOT & 2#5 TOP	10'-8"

1. DO NOT USE THIS SCHEDULE IF WALL IS LOAD BEARING SUPPORTING ANYTHING OTHER THAN WALL WEIGHT ONLY. IF WALL IS LOAD BEARING USE THE LOAD BEARING STACK BOND MASONRY LINTEL SCHEDULE.
2. PROVIDE 2'-0" MINIMUM BEARING FOR ALL LINTELS. FILL CELLS SOLID AT EACH SIDE OF OPENING AND REINFORCE WITH 1#5 BAR CONTINUOUS.
3. ALL EXPOSED LINTEL ANGLES TO BE HOT DIP GALVANIZED.
4. WHERE MAXIMUM HEIGHT OF WALL ABOVE LINTEL IS EXCEEDED, PROVIDE ADDITIONAL LINTELS EQUALLY SPACED ABOVE TO LIMIT WALL HEIGHTS ABOVE LINTEL TO THAT SHOWN IN THE TABLE ABOVE.
5. SHORE LINTEL UNTIL MORTAR AND GROUT HAVE SET AND CURED.
6. PROVIDE 8" DEEP BOND BEAM REINFORCED WITH 1#4 CONT AT BOTTOM OF ALL WINDOW OPENINGS. EXTEND 2'-0" PAST OPENING ON EACH SIDE OF WINDOW OPENING.

ALABAMA REGISTERED No. 22596 PROFESSIONAL ENGINEER H. CRAIG WINN
H. Craig Winn, P.E.
1-2-2024

SHEET TITLE:
TYPICAL DETAILS

PROJ. MGR.:	HCW
DRAWN:	ABS
DATE:	01-12-2024
REVISIONS	

JOB NO. 23-41

SHEET NO:
S1.3
4 OF 10

0 1" 2"

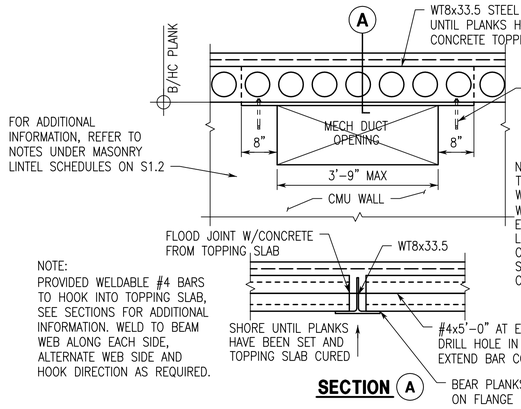

SECTION (A)

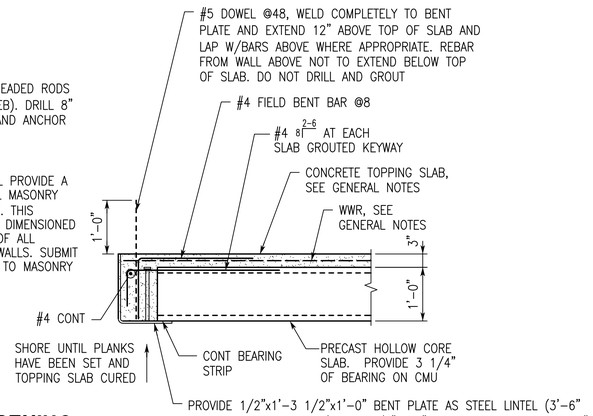

SECTION (A) SIM

DETAIL AT MECH DUCT OPENING BELOW HOLLOW CORE PANELS

NOT TO SCALE

AT OPENINGS WITHIN STORM SHELTER MASONRY WALL, MINIMUM BEARING TO BE INCREASED TO 16" IN LIEU OF 8" AND PROVIDE (4) THREADED RODS (2 EACH SIDE OF WEB AT 8" GAGE).
IF PANEL ONLY LOCATED ON 1 SIDE, SEE SECTION "A" SIMILAR ON THIS SHEET.

PIPING WEIGHTS

PIPE DIAMETER	PIPE WT PER/FOOT (PLF)	FLUID WT PER/FOOT (PLF)	INSULATION & HANGERS (PLF)	TOTAL WT PER/FOOT (PLF)
4"	10.80	6.10	2.00	18.90
6"	19.00	13.80	3.00	35.80
8"	28.60	23.90	4.00	56.50
10"	40.50	37.50	4.00	82.00
12"	49.60	54.00	5.00	108.60
14"	54.60	65.70	5.00	125.30
16"	62.60	87.10	5.00	154.70

NOTES:
1. FROM ANVIL INTERNATIONAL PIPE FITTERS HANDBOOK.
2. ALL PIPES ASSUMED TO BE SCHEDULE 40.
3. FLUID WEIGHT INCLUDES ALLOWANCE FOR GLYCOL CONCENTRATION.
4. PIPING SUPPORT AND THRUST BRACING REQUIREMENTS SHALL BE COORDINATED BY THE GENERAL CONTRACTOR WITH THE STEEL/JOIST FABRICATOR. SEE MECHANICAL/PLUMBING DRAWINGS FOR PIPING SUPPORT AND THRUST BRACING REQUIREMENTS.
5. FOR PIPE SIZES NOT LISTED, CONTACT STRUCTURAL ENGINEER.

SDG
STRUCTURAL DESIGN GROUP
300 Chase Park South, Suite 125
Hoover, AL 35244
tel 205-824-5200
fax 205-824-5280
Job Number 23-187

LATHAN ARCHITECTS

CLASSROOM ADDITION FOR
MARGARET ELEMENTARY SCHOOL
680 COUNTY ROAD 12, ODENVILLE, ALABAMA 35120
ST. CLAIR COUNTY BOARD OF EDUCATION

ALABAMA REGISTERED No. 22596 PROFESSIONAL ENGINEER H. CRAIG WINN
H. Craig Winn, P.E.
1-12-2024

SHEET TITLE:
TYPICAL DETAILS

PROJ. MGR.:	HCW
DRAWN:	ABS
DATE:	01-12-2024
REVISIONS	

JOB NO. 23-41

SHEET NO:
S1.4
5 OF 10

0 1" 2"

SDG
STRUCTURAL DESIGN GROUP
300 Chase Park South, Suite 125
Hoover, AL 35244
tel 205-824-5200
fax 205-824-5280
Job Number 23-187

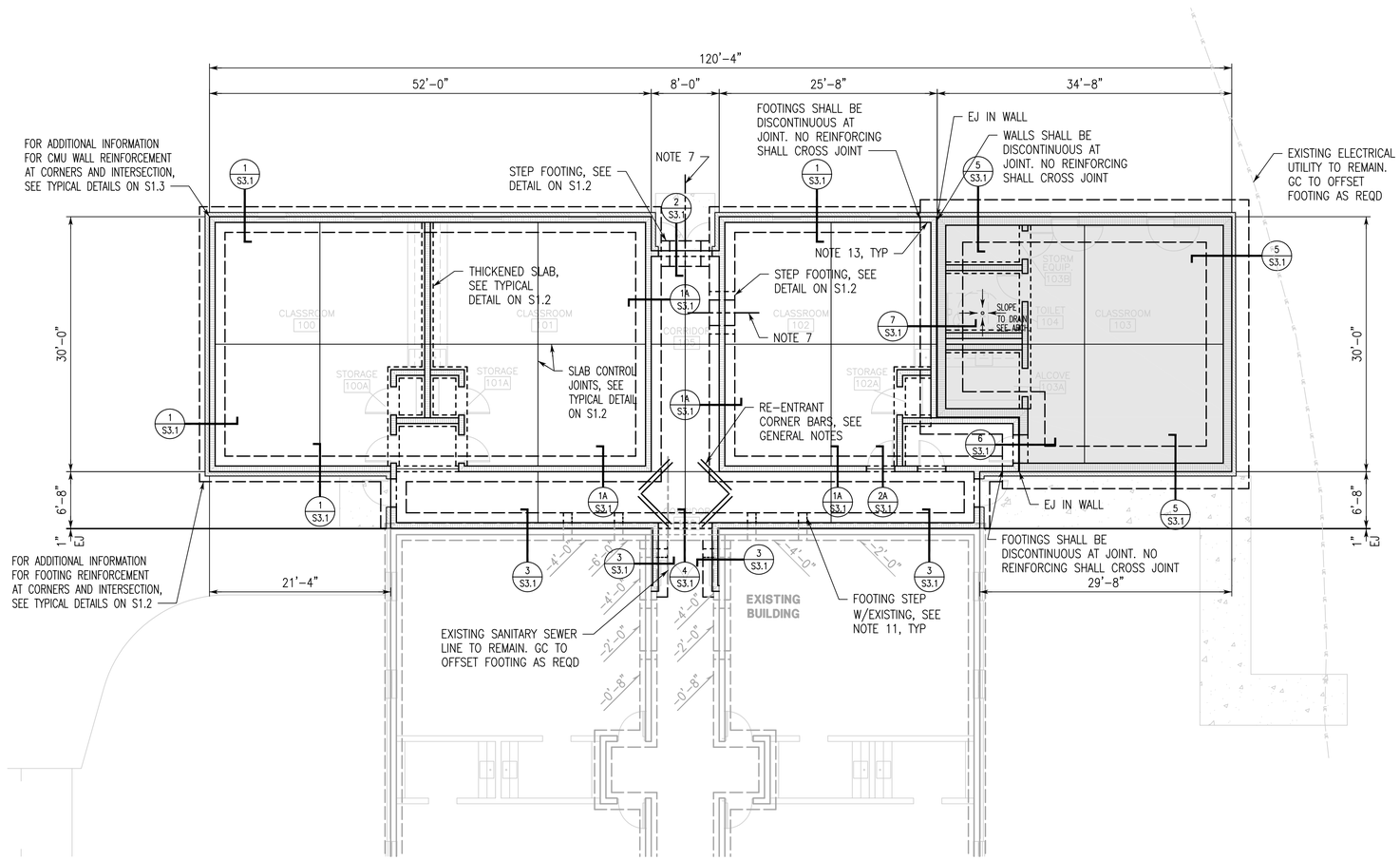

PROJECT NORTH

FOUNDATION PLAN

1/8"=1'-0"

1. FINISH FLOOR (TOP OF SLAB) ELEVATION 0'-0", UNLESS NOTED.
2. TOP OF FOOTING ELEVATION -2'-0", UNLESS NOTED.
3. FOR SLAB ON GRADE CONSTRUCTION, SEE GENERAL NOTES AND TYPICAL DETAILS.
4. FOR SLAB RECESS AND RAMP LOCATIONS, SEE ARCHITECTURAL DRAWINGS.
5. GENERAL CONTRACTOR SHALL COORDINATE TILE JOINT LOCATIONS WITH CONTROL JOINTS
6. COORDINATE WITH ARCHITECTURAL DRAWINGS FOR LOCATIONS OF ALL CMU WALLS. NOTE ALL EXTERIOR PLAN DIMENSIONS ARE TO EXTERIOR FACE OF CMU ABOVE WATERTABLE.
7. GENERAL CONTRACTOR SHALL COORDINATE ALL FOOTING STEPS WITH CIVIL, PLUMBING AND UTILITY DRAWINGS. FOR FOOTING STEP AT UTILITIES, SEE DETAIL ON S1.2.
8. FOOTING WIDTHS INDICATED ON PLAN MAY NOT BE TO SCALE. COORDINATE WITH SECTION CUTS FOR FOOTING WIDTHS AND ADDITIONAL INFORMATION.
9. FOR PAVEMENT AND HARDSCAPE INFORMATION, SEE ARCHITECTURAL DRAWINGS AND CIVIL DRAWINGS.
10. CONTRACTOR SHALL COORDINATE EMBEDS INTO MASONRY WITH LOUVER OR DOOR MANUFACTURER. PROVIDE MODIFICATIONS TO STRUCTURE AS REQUIRED TO FULLY COMPLY WITH MANUFACTURER INSTALLATION DETAILS. SUBMIT ANY MODIFICATIONS TO DESIGN TEAM FOR REVIEW.
11. GENERAL CONTRACTOR COORDINATE FOOTING ELEVATIONS AND STEP NEW FOOTINGS AS REQUIRED TO MATCH EXISTING FOOTING ELEVATIONS. DOWEL CONTINUOUS REINFORCING 9" INTO EXISTING FOOTING BY DRILLING AND ANCHORING WITH EPOXY ADHESIVE.
12. THE [ ] HATCHED/SHADED AREA ON THE PLAN INDICATES AREA TO BE USED AS STORM SHELTER. FOR ADDITIONAL INFORMATION, SEE GENERAL NOTES, PLANS AND SECTIONS.
13. VERTICAL DOWELS AT INDICATED LOCATIONS ARE TO ONLY EXTEND ABOVE TOP OF FOOTING ELEVATIONS BY 1'-0". LAP DOWELS 1'-0" INTO WALL OR MASONRY COLUMN. PROVIDE DECREASED LAP LENGTH WHEN DOWELING NON-STORM SHELTER WALLS OR MASONRY COLUMNS TO STORM SHELTER WALL FOOTINGS.

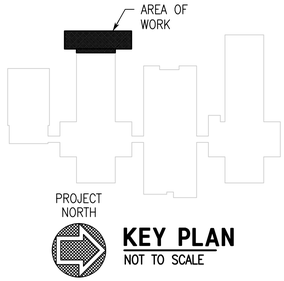

KEY PLAN
NOT TO SCALE

LATHAN ARCHITECTS

CLASSROOM ADDITION FOR
MARGARET ELEMENTARY SCHOOL
680 COUNTY ROAD 12, ODENVILLE, ALABAMA 35120
ST. CLAIR COUNTY BOARD OF EDUCATION

ALABAMA REGISTERED No. 22596 PROFESSIONAL ENGINEER H. CRAIG WINN
H. Craig Winn P.E.
1-12-2024

SHEET TITLE:
FOUNDATION PLAN

PROJ. MGR.:	HCW
DRAWN:	ABS
DATE:	01-12-2024
REVISIONS	

JOB NO. 23-41
SHEET NO:
S2.1
6 OF 10
0 1" 2"

SDG
STRUCTURAL DESIGN GROUP
300 Chase Park South, Suite 125
Hoover, AL 35244
tel 205-824-5200
fax 205-824-5280
Job Number 23-187

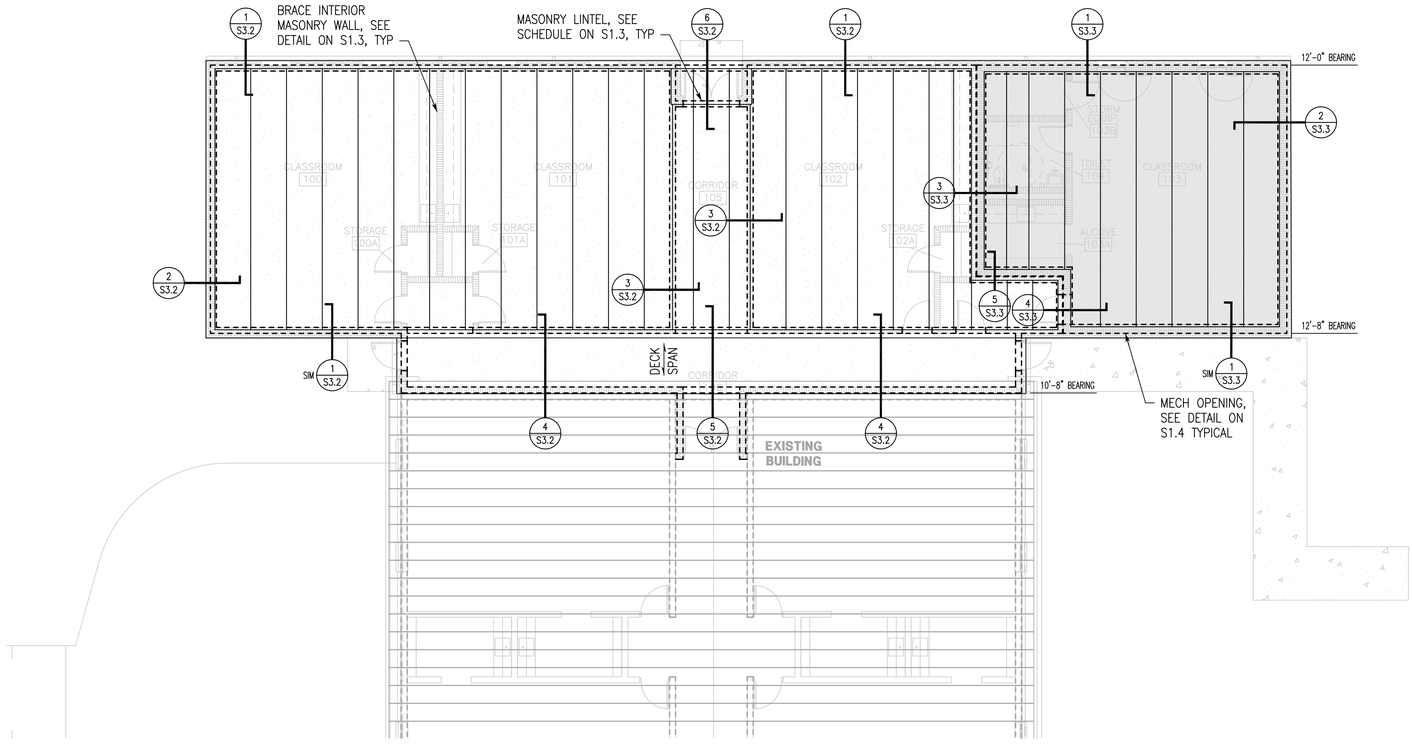

PROJECT NORTH

ROOF FRAMING PLAN

1/8"=1'-0"

1. FINISH FLOOR (TOP OF SLAB) ELEVATION, SEE PLAN.
2. FLOOR/ROOF SYSTEM: 10" THICK PRECAST HOLLOW CORE SLABS WITH MAXIMUM 3" STRUCTURAL TOPPING SLAB, SEE GENERAL NOTES.
3. PRECAST HOLLOW CORE SLAB LAYOUT SHOWN IS FOR SCHEMATIC PURPOSES ONLY. PRECAST MANUFACTURER TO VERIFY ACTUAL LAYOUT. HOLLOW CORE MANUFACTURER DESIGN SLABS FOR DEAD LOADS, LIVE LOADS AND WIND LOADS (DOWNWARD AND UPLIFT) AS INDICATED IN GENERAL NOTES AND TYPICAL DETAILS, IN ADDITION TO SELF-WEIGHT DEAD LOAD, 20 PSF COLLATERAL DEAD LOAD AND OTHER APPLICABLE FLOOR LIVE LOADS.
4. CUT OR BREAK CORES OF HOLLOW CORE SLABS ONLY AS REQUIRED TO PLACE REINFORCING.
5. THE GENERAL CONTRACTOR SHALL COORDINATE AND VERIFY THE SIZE, WEIGHT AND LOCATION OF ALL CONCENTRATED AND MECHANICAL LOADS WITH THE PRECAST MANUFACTURER.
6. COORDINATE MECHANICAL OPENINGS WITH MECHANICAL DRAWINGS AND UNIT MANUFACTURER. PRECAST SUPPLIER TO SHOW OPENINGS ON SHOP DRAWINGS AND PROVIDE ANY SUPPORT FOR OPENINGS. CONTRACTOR TO PROVIDE PENETRATION PROTECTION AT ANY STORM SHELTER WALL/ROOF PENETRATION.
7. PROVIDE MASONRY AND VENEER LINTELS AT ALL OPENINGS, SEE SCHEDULES ON S1.3.
8. THE ▭ HATCHED AREA ON THE PLAN INDICATES REINFORCED SHELTER ROOF. THIS AREA IS NOT TO BE OCCUPIED ON THIS FLOOR AS STORM SHELTER. FOR ADDITIONAL INFORMATION, SEE GENERAL NOTES, PLANS AND SECTIONS.
9. CONTRACTOR NOTE: DO NOT PROVIDE MASONRY CONTROL JOINTS IN STORM SHELTER CMU WALLS.
10. WHERE MECHANICAL DUCTS EXTEND THRU LOAD BEARING WALLS BELOW HOLLOW CORE SLABS, PROVIDE MASONRY BOND BEAM PER DETAIL/SCHEDULE ON S1.4.
11. CONTRACTOR NOTE: ALL MECHANICAL OPENING SIZES AND LOCATIONS IN LOAD BEARING MASONRY WALLS SHOULD BE COORDINATED BY THE CONTRACTOR AND INDICATED ON THE MASONRY WALL REBAR SHOP DRAWINGS.
12. CONTRACTOR SHALL COORDINATE EMBEDS INTO MASONRY WITH LOUVER OR DOOR MANUFACTURER. PROVIDE MODIFICATIONS TO STRUCTURE AS REQUIRED TO FULLY COMPLY WITH MANUFACTURERS INSTALLATION DETAILS. SUBMIT ANY MODIFICATIONS TO DESIGN TEAM FOR REVIEW.
13. CONTRACTOR SHALL COORDINATE MECHANICAL DUCT LAYOUT AND ROUTE. DUCT LAYOUT IS TO BE PROVIDED TO STRUCTURAL EOR FOR REVIEW AND APPROVAL PRIOR TO MASONRY WALL CONSTRUCTION. SUBMITTED LAYOUT TO HAVE ROUTE, SIZE, ELEVATION, ETC. AS WELL AS ANY REQUIRED WALL OPENINGS (LOCATION, SIZE, ETC.).
14. CONTRACTOR TO PROVIDE PENETRATION PROTECTION AT ANY AND ALL STORM SHELTER WALL/ROOF PENETRATIONS LARGER THAN 3 1/2" SQUARE INCHES IN AREA FOR RECTANGULAR PENETRATIONS OR 2 1/16" INCHES IN DIAMETER. ALL PENETRATIONS/OPENINGS (MECHANICAL, ELECTRICAL, PLUMBING, ETC.) SHALL BE A MINIMUM OF 6 INCHES CLEAR FROM EACH OTHER WHERE INSTALLED IN MULTIPLE ROWS AND/OR COLUMNS.
15. CONTRACTOR BUILD ALL CMU PARTITION WALLS (EXCEPT TOILET AND URINAL PARTITION WALLS) WITHIN THE STORM SHELTER HARD TO UNDERSIDE OF HOLLOW CORE SLAB.

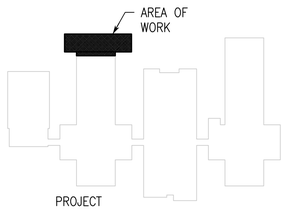

PROJECT NORTH

KEY PLAN

NOT TO SCALE

LATHAN ARCHITECTS

CLASSROOM ADDITION FOR
MARGARET ELEMENTARY SCHOOL
680 COUNTY ROAD 12, ODENVILLE, ALABAMA 35120
ST. CLAIR COUNTY BOARD OF EDUCATION

ALABAMA REGISTERED No. 22596 PROFESSIONAL ENGINEER CRAIG WINN
H. Craig Winn, P.E.
1-12-2024

SHEET TITLE:
ROOF FRAMING PLAN

PROJ. MGR.:	HCW
DRAWN:	ABS
DATE:	01-12-2024
REVISIONS	

JOB NO. 23-41

SHEET NO:
S2.2
7 OF 10

0 1" 2"

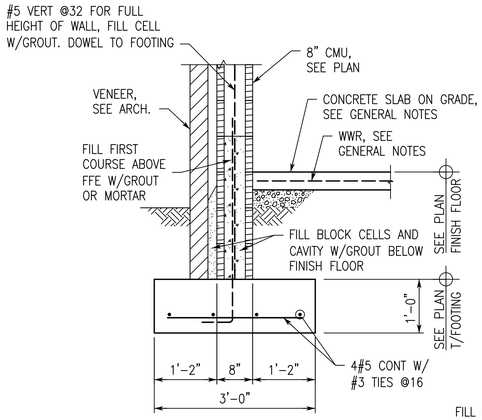

SECTION 1/S3.1
3/4"=1'-0"

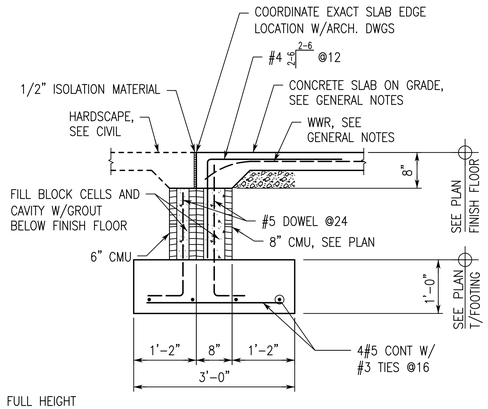

SECTION 2/S3.1
3/4"=1'-0"

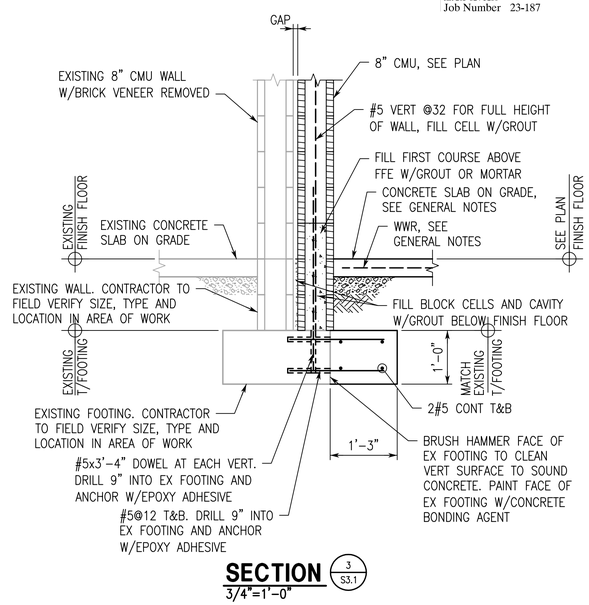

SECTION 3/S3.1
3/4"=1'-0"

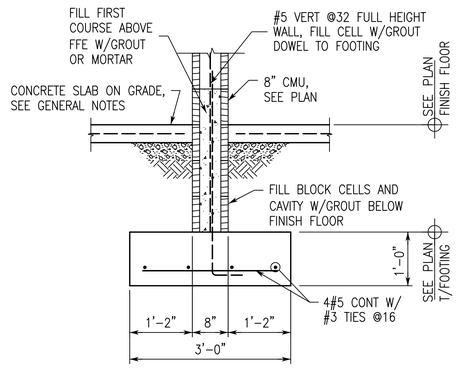

SECTION 1A/S3.1
3/4"=1'-0"

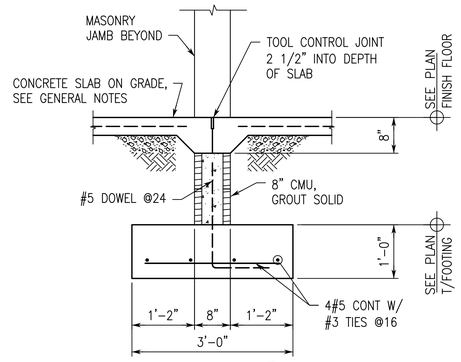

SECTION 2A/S3.1
3/4"=1'-0"

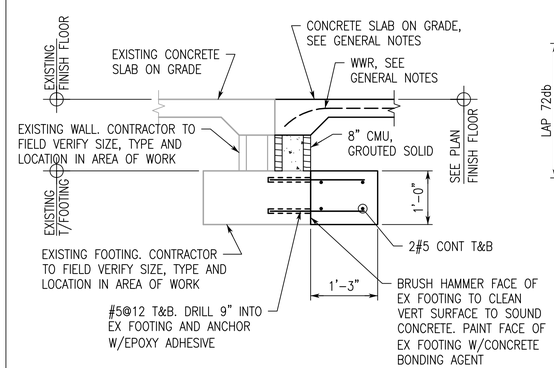

SECTION 4/S3.1
3/4"=1'-0"

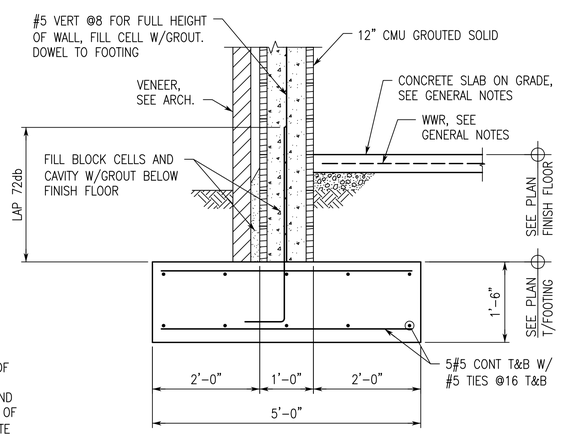

SECTION 5/S3.1
3/4"=1'-0"

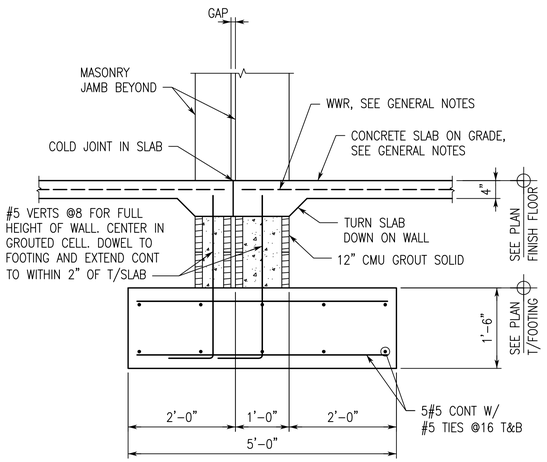

SECTION 6/S3.1
3/4"=1'-0"

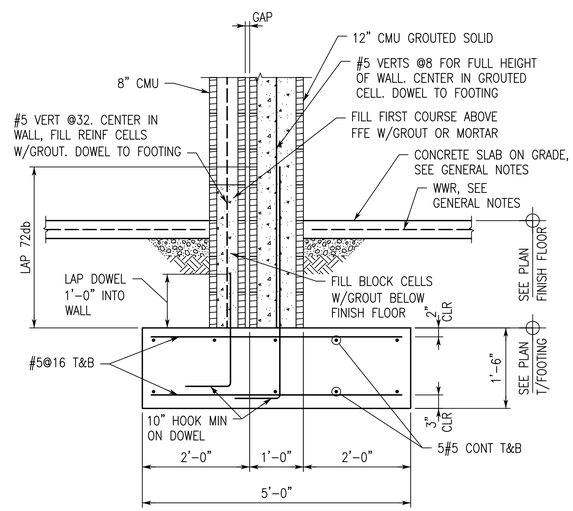

SECTION 7/S3.1
3/4"=1'-0"

NOTE:
WALLS SHALL BE DISCONTINUOUS AT JOINT. NO REINFORCING SHALL CROSS JOINT.

SDG
STRUCTURAL DESIGN GROUP
300 Chase Park South, Suite 125
Hoover, AL 35244
tel 205-824-5200
fax 205-824-5280
Job Number 23-187

LATHAN ARCHITECTS

CLASSROOM ADDITION FOR
MARGARET ELEMENTARY SCHOOL
680 COUNTY ROAD 12, ODENVILLE, ALABAMA 35120
ST. CLAIR COUNTY BOARD OF EDUCATION

ALABAMA REGISTERED No. 22596 PROFESSIONAL ENGINEER H. CRAIG WINN
H. Craig Winn P.E.
1-12-2024

SHEET TITLE:
SECTIONS AND DETAILS

PROJ. MGR.:	HCW
DRAWN:	ABS
DATE:	01-12-2024
REVISIONS	

JOB NO. 23-41
SHEET NO:
S3.1
8 OF 10

SDG
STRUCTURAL DESIGN GROUP
300 Chase Park South, Suite 125
Hoover, AL 35244
tel 205-824-5200
fax 205-824-5280
Job Number 23-187

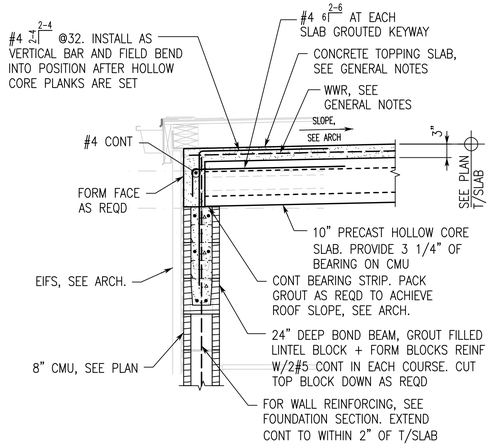

SECTION 1 / S3.2
3/4"=1'-0"

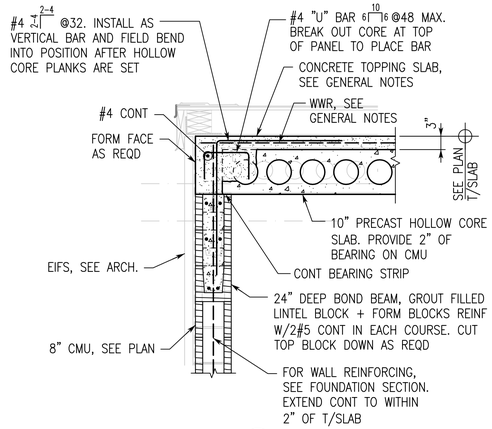

SECTION 2 / S3.2
3/4"=1'-0"

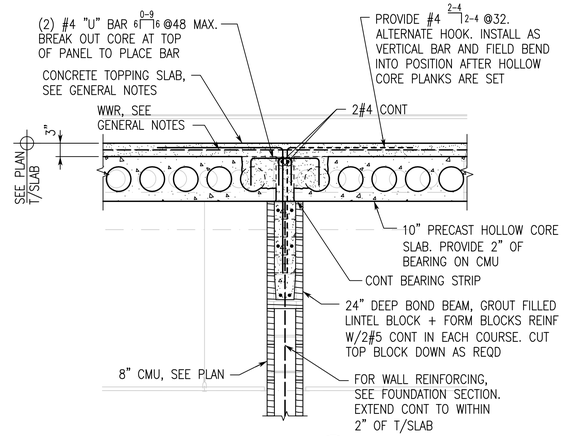

SECTION 3 / S3.2
3/4"=1'-0"

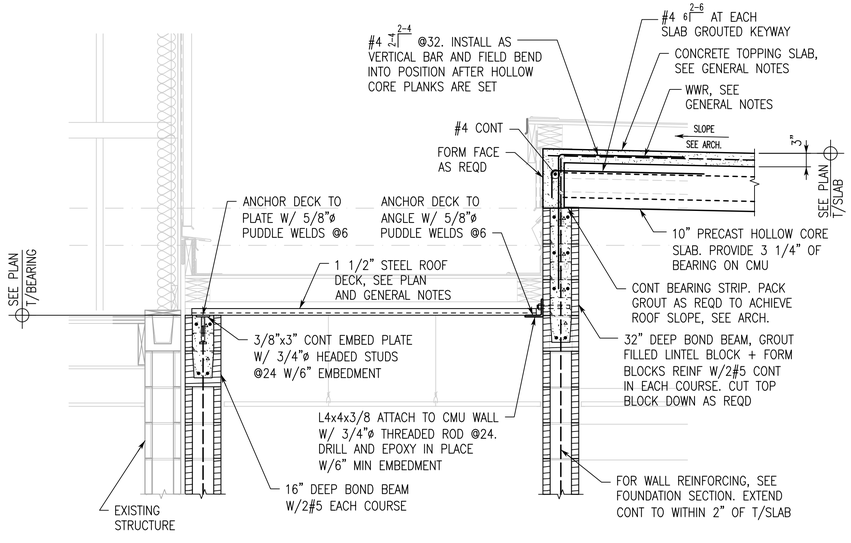

SECTION 4 / S3.2
3/4"=1'-0"

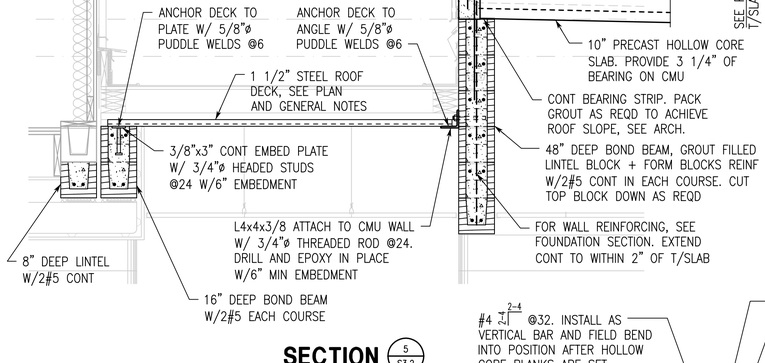

SECTION 5 / S3.2
3/4"=1'-0"

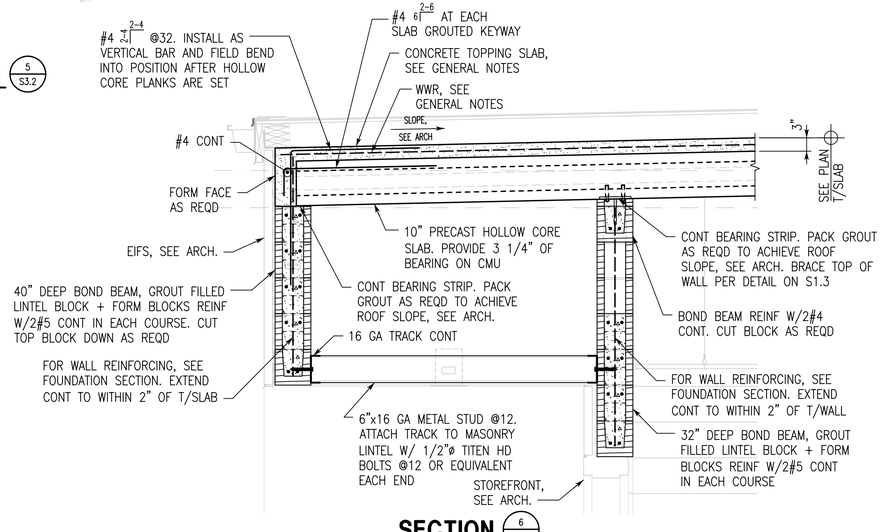

SECTION 6 / S3.2
3/4"=1'-0"

LATHAN ARCHITECTS

CLASSROOM ADDITION FOR
MARGARET ELEMENTARY SCHOOL
680 COUNTY ROAD 12, ODENVILLE, ALABAMA 35120
ST. CLAIR COUNTY BOARD OF EDUCATION

ALABAMA REGISTERED No. 22596 PROFESSIONAL ENGINEER H. CRAIG WINN
H. Craig Winn P.E.
12-2024

SHEET TITLE:
SECTIONS AND DETAILS

PROJ. MGR.:	HCW
DRAWN:	ABS
DATE:	01-12-2024
REVISIONS	

JOB NO. 23-41
SHEET NO:
S3.2
9 OF 10
0 1" 2"

SDG
STRUCTURAL DESIGN GROUP
300 Chase Park South, Suite 125
Hoover, AL 35244
tel 205-824-5200
fax 205-824-5280
Job Number 23-187

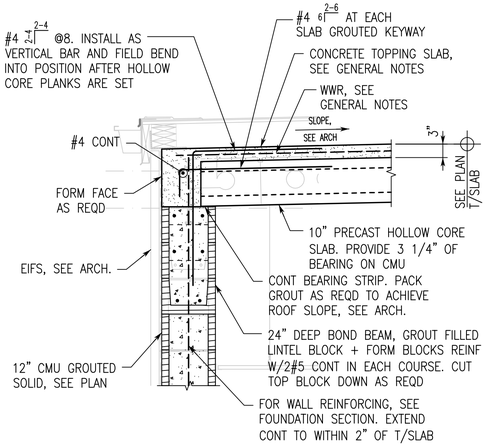

SECTION 1/S3.3
3/4"=1'-0"

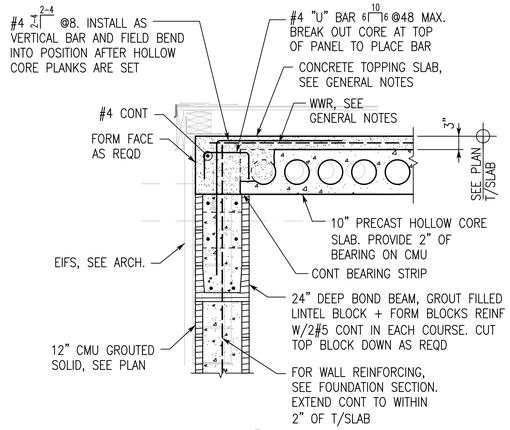

SECTION 2/S3.3
3/4"=1'-0"

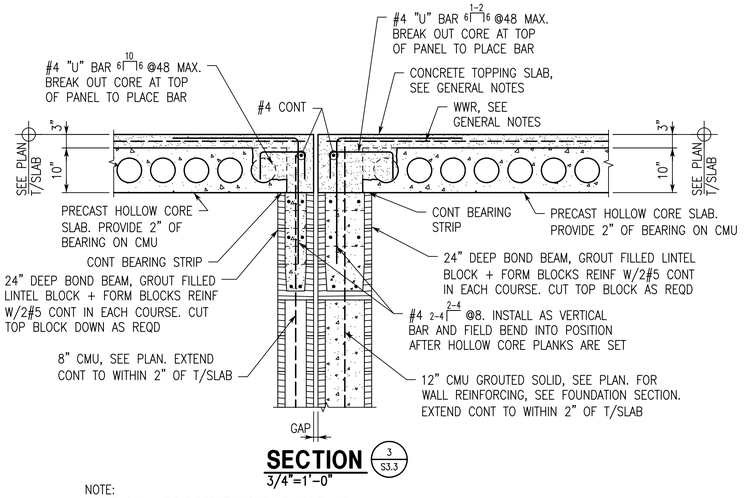

SECTION 3/S3.3
3/4"=1'-0"

NOTE:
WALLS SHALL BE DISCONTINUOUS AT JOINT. NO REINFORCING SHALL CROSS JOINT. FORM FACES AS REQUIRED TO PROVIDE JOINT IN SLAB.

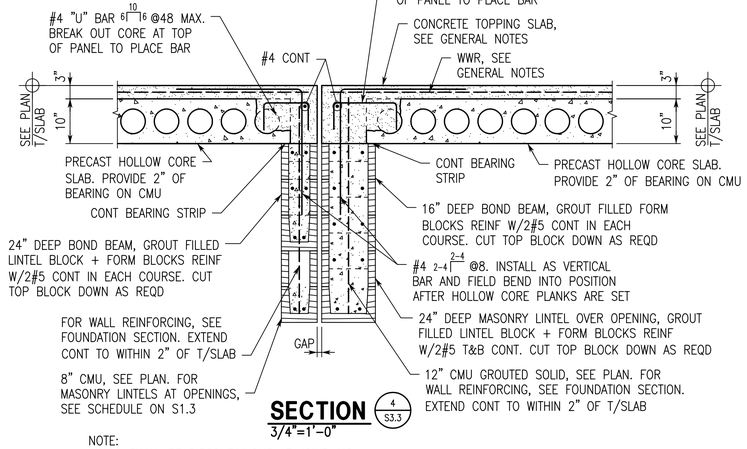

SECTION 4/S3.3
3/4"=1'-0"

NOTE:
WALLS SHALL BE DISCONTINUOUS AT JOINT. NO REINFORCING SHALL CROSS JOINT. FORM FACES AS REQUIRED TO PROVIDE JOINT IN SLAB.

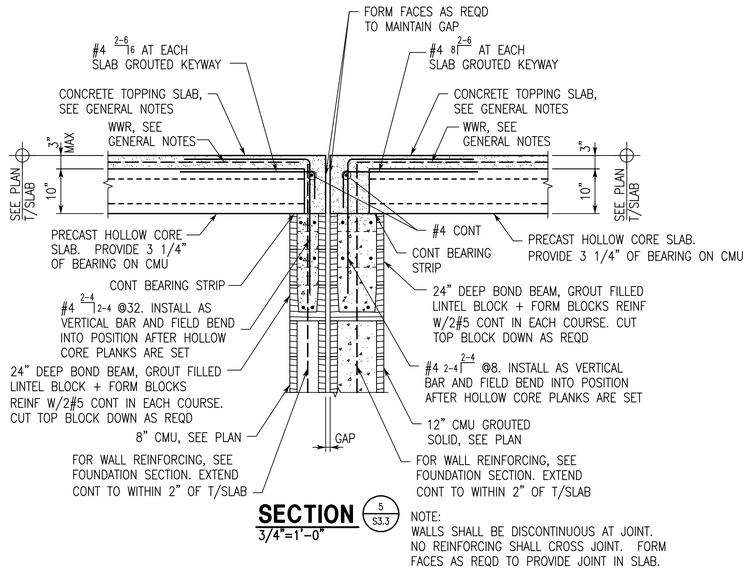

SECTION 5/S3.3
3/4"=1'-0"

NOTE:
WALLS SHALL BE DISCONTINUOUS AT JOINT. NO REINFORCING SHALL CROSS JOINT. FORM FACES AS REQD TO PROVIDE JOINT IN SLAB.

LATHAN ARCHITECTS

CLASSROOM ADDITION FOR
MARGARET ELEMENTARY SCHOOL
680 COUNTY ROAD 12, ODENVILLE, ALABAMA 35120
ST. CLAIR COUNTY BOARD OF EDUCATION

ALABAMA REGISTERED No. 22596 PROFESSIONAL ENGINEER H. LAY WINN JR. CRAIG
H. Lay Winn, P.E.
1-12-2024

SHEET TITLE:
SECTIONS AND DETAILS

PROJ. MGR.:	HCW
DRAWN:	ABS
DATE:	01-12-2024
REVISIONS	

JOB NO. 23-41
SHEET NO:
S3.3
10 OF 10
0 1" 2"

PLUMBING LEGEND SYMBOLS AND ABBREVIATIONS

	DOMESTIC COLD WATER
	DOMESTIC HOT WATER
	SANITARY VENT
	SANITARY WASTE
	EXISTING SANITARY WASTE TO REMAIN

	BALL VALVE
	VALVE IN VERTICAL
	CAP ON END OF PIPE
	CLEANOUT – FLOOR TYPE
	CLEANOUT – WALL TYPE
	P–TRAP
	PIPE TURNING DOWN
	PIPE TURNING UP
	TEE DOWN
	TEE UP
	TIE NEW INTO EXISTING
P–1	PLUMBING FIXTURE NUMBER
XX	RISER NUMBER
	WATER HAMMER ARRESTOR
	PLUG TYPE CLEANOUT
	BALANCING VALVE
	CHECK VALVE
	GATE VALVE
	REDUCED PRESSURE ZONE BFP
	THERMOSTATIC MIXING VALVE
	FLOOR SINK
	FLOOR DRAIN
	ROOF DRAIN/OVERFLOW DRAIN

ABV	ABOVE
AFF	ABOVE FINISHED FLOOR
INV	INVERT
BFF	BELOW FINISHED FLOOR
CW	COLD WATER
DN	DOWN
EX	EXISTING
HW	HOT WATER
WS	WASTE STACK
VS	VENT STACK
AC	ABOVE CEILING
WHA	WATER HAMMER ARRESTOR
BFG	BELOW FINISHED GRADE
TMV	THERMOSTATIC MIXING VALVE
TP	TRAP PRIMER

PLUMBING FIXTURE SCHEDULE

EQUIPMENT NO.	DESCRIPTION	HOT WATER	COLD WATER	WASTE	VENT	REMARKS
SK–1	HAND WASH SINK	1/2"	1/2"	1–1/2"	1–1/2"	
LAV–1	LAVATORY (ADA COMPLIANT)	1/2"	1/2"	1–1/2"	1–1/2"	WALL MOUNTED. PROVIDE MIXING VALVE.
WC–1	WATER CLOSET (ADA COMPLIANT)	––	1–1/2"	3"	2"	MANUAL FLUSH VALVE
FD–1	FLOOR DRAIN	––	––	3"	2"	PROVIDE TRAP GUARD
WH–1	WALL HYDRANT	––	1/2"	––	––	

INSTANTANEOUS ELECTRIC WATER HEATER SCHEDULE

EQUIPMENT NO.	MANUFACTURER AND MODEL NO.	SERVICE	EFF (%)	ENTERING WATER TEMP (°F)	LEAVING WATER TEMP (°F)	FLOW RATE (GPM)	STORAGE CAPACITY (GAL)	TANK DIMENSIONS		ELECTRICAL			REMARKS
								HEIGHT (INCHES)	DIAMETER (INCHES)	HEATING ELEMENTS		VOLTS/PH/HZ	
										WATTAGE	QNTY		
IWH–1	CHRONOMITE CM–20L	HOT WATER	N/A	60°	109°	.35	––	––	––	4160	1	208/1/60	SET AT 109°F
IWH–2	CHRONOMITE CM–20L	SHELTER HOT WATER	N/A	60°	109°	.35	––	––	––	4160	1	208/1/60	SET AT 109°F, 1)

1) PROVIDE WATER HEATER ON SHELTER BACKUP POWER.

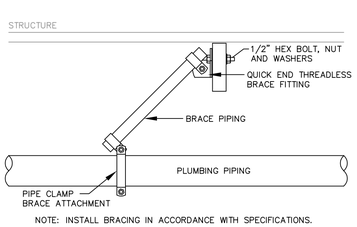

NOTE: INSTALL BRACING IN ACCORDANCE WITH SPECIFICATIONS.

7 P0.1 LONGITUDINAL SEISMIC BRACE DETAIL
NO SCALE

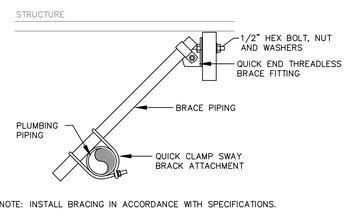

NOTE: INSTALL BRACING IN ACCORDANCE WITH SPECIFICATIONS.

8 P0.1 LATERAL SEISMIC BRACE DETAIL
NO SCALE

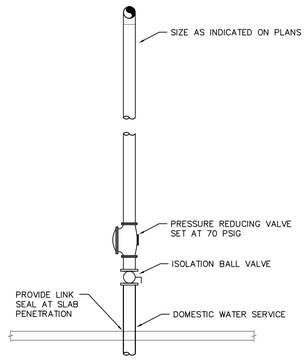

5 P0.1 DOMESTIC WATER ENTRANCE DETAIL
NO SCALE

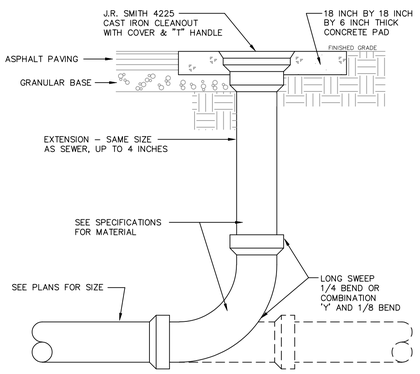

6 P0.1 EXTERIOR CLEANOUT
NO SCALE

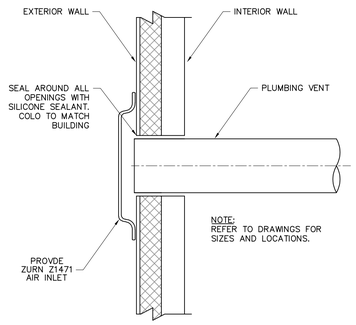

3 P0.1 VENT THROUGH WALL DETAIL
NO SCALE

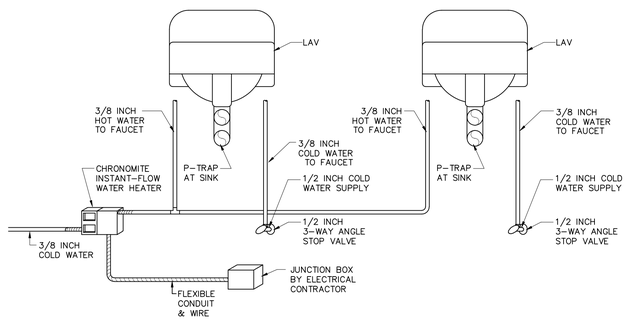

4 P0.1 INSTANTANEOUS WATER HEATER
NO SCALE

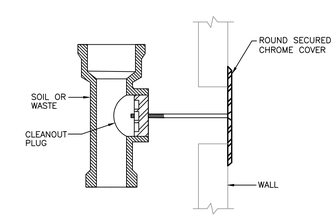

1 P0.1 WALL CLEANOUT
NO SCALE

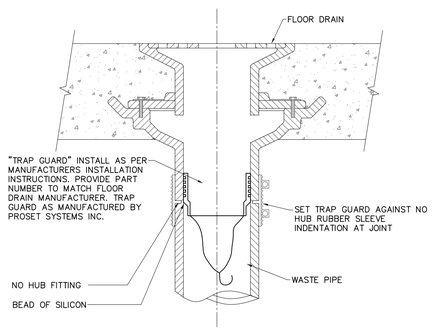

2 P0.1 TRAP GUARD SEAL DETAIL
NO SCALE

Pinnacle ENGINEERING, INC
Engineering & Design Consultants
2111 Parkway Office Circle, Suite 125
Birmingham, AL 35244
(205) 733-6912 FAX: (205) 733-6913
Job No.: 23198 File: 23198W01

LATHAN ARCHITECTS

CLASSROOM ADDITION FOR
MARGARET ELEMENTARY SCHOOL
680 COUNTY ROAD 12, ODENVILLE, ALABAMA 35120
ST. CLAIR COUNTY BOARD OF EDUCATION

ALABAMA REGISTERED No. 24075 PROFESSIONAL ENGINEER
1/11/24

SHEET TITLE:
PLUMBING LEGEND, SCHEDULES, ABBREVIATIONS, AND DETAILS

PROJ. MGR.: JMH
DRAWN: CRA/JSH
DATE: JANUARY 11, 2024
REVISIONS

JOB NO. 23-41
SHEET NO:
P0.1
1 OF 2

0 1" 2"

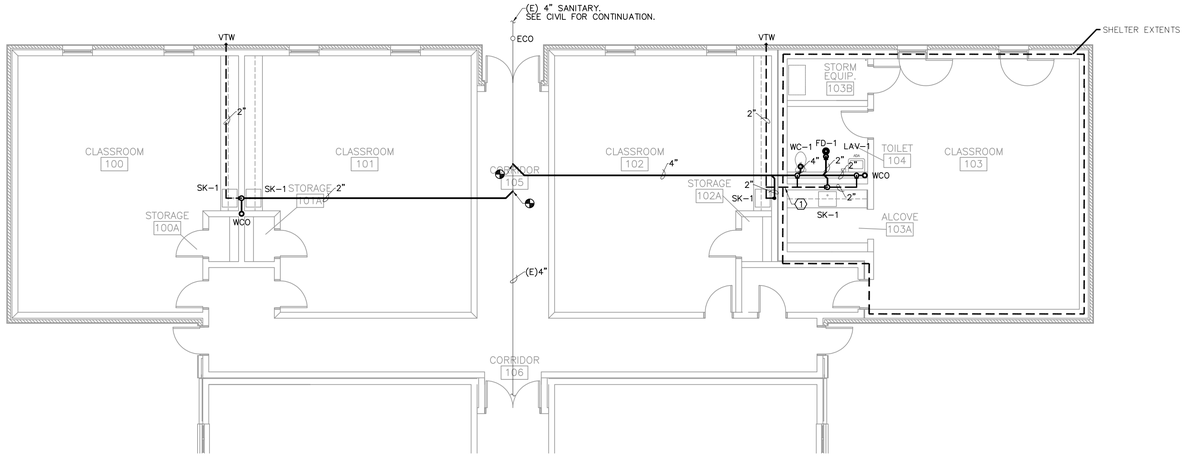

FLOOR PLAN
PLUMBING – GRAVITY
NORTH
0 2 4 8 16
SCALE: 1/8" = 1'-0"

GENERAL NOTES:

1. CONTRACTOR SHALL VERIFY EXISTING CONDITIONS IN FIELD PRIOR TO BEGINNING WORK.
2. SPACE ABOVE CEILING IS LIMITED. CAREFUL COORDINATION WITH LIGHTING, ELECTRICAL, MECHANICAL, FIRE PROTECTION, STRUCTURAL AND ARCHITECTURAL WORK IS CRITICAL FOR COMPLETE PIPING INSTALLATION. CONTRACTOR SHALL PROVIDE NECESSARY OFFSETS IN NEW AND EXISTING PIPING AND ELECTRICAL CONDUIT AS REQUIRED TO ACCOMMODATE NEW WORK. CONTRACTOR SHALL ALLOW FOR ANY CONFLICTS ENCOUNTERED.
3. PIPING LAYOUTS ARE DIAGRAMMATIC AND DO NOT SHOW ALL ELEMENTS OF CONSTRUCTION. CONTRACTOR SHALL BE RESPONSIBLE FOR ALL CHANGES ON DIRECTION, ELEVATION AND MINOR OFFSETS NECESSARY FOR COMPLETE INSTALLATION OF ELEMENTS SHOWN.
4. ALL WASTE PIPING SHOWN IS BELOW FINISHED FLOOR UNLESS OTHERWISE NOTED. ALL VENT PIPING SHOWN IS ABOVE CEILING UNLESS OTHERWISE NOTED.
5. REFER TO ARCHITECTURAL REFLECTED CEILING PLANS FOR LOCATIONS OF ALL CEILING MOUNTED DEVICES. REFER TO ARCHITECTURAL FLOOR PLANS FOR ALL DIMENSIONS.

DRAWING NOTES:

1. SHELTER PENETRATION LESS THAN 2.5" DOES NOT REQUIRE PROTECTION. ALL SHELTER PENETRATIONS SHALL COMPLY WITH ICC500 – 2020. PROVIDE CORE DRILL OF SHELTER WALL ONLY LARGE ENOUGH FOR 2" PVC VENT TO PASS THROUGH.

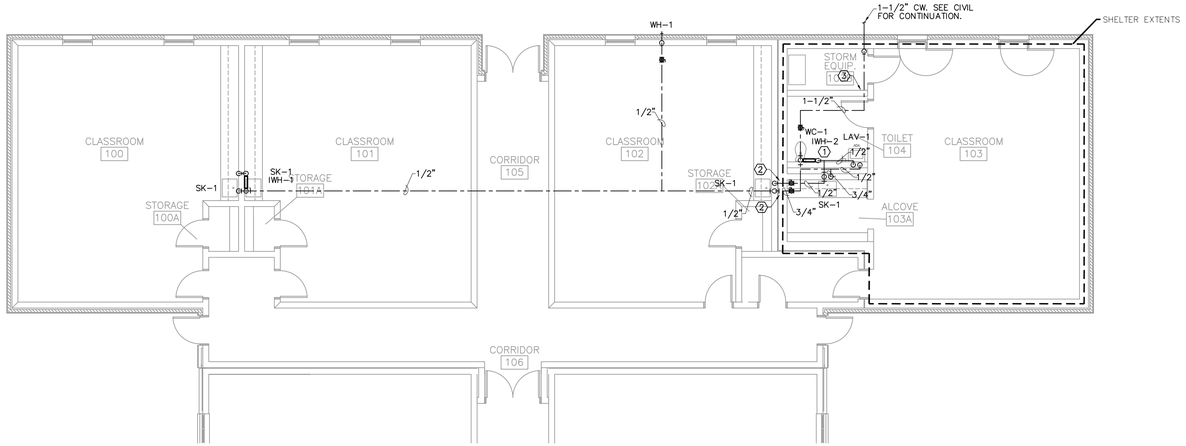

FLOOR PLAN
PLUMBING – PRESSURE
NORTH
0 2 4 8 16
SCALE: 1/8" = 1'-0"

GENERAL NOTES:

1. CONTRACTOR SHALL VERIFY EXISTING CONDITIONS IN FIELD PRIOR TO BEGINNING WORK.
2. SPACE ABOVE CEILING IS LIMITED. CAREFUL COORDINATION WITH LIGHTING, ELECTRICAL, MECHANICAL, FIRE PROTECTION, STRUCTURAL AND ARCHITECTURAL WORK IS CRITICAL FOR COMPLETE PIPING INSTALLATION. CONTRACTOR SHALL PROVIDE NECESSARY OFFSETS IN NEW AND EXISTING PIPING AND ELECTRICAL CONDUIT AS REQUIRED TO ACCOMMODATE NEW WORK. CONTRACTOR SHALL ALLOW FOR ANY CONFLICTS ENCOUNTERED.
3. PIPING LAYOUTS ARE DIAGRAMMATIC AND DO NOT SHOW ALL ELEMENTS OF CONSTRUCTION. CONTRACTOR SHALL BE RESPONSIBLE FOR ALL CHANGES ON DIRECTION, ELEVATION AND MINOR OFFSETS NECESSARY FOR COMPLETE INSTALLATION OF ELEMENTS SHOWN.
4. ALL PRESSURE PIPING SHOWN IS ABOVE THE CEILING UNLESS OTHERWISE NOTED.
5. REFER TO ARCHITECTURAL REFLECTED CEILING PLANS FOR LOCATIONS OF ALL CEILING MOUNTED DEVICES. REFER TO ARCHITECTURAL FLOOR PLANS FOR ALL DIMENSIONS.
6. COORDINATE ACCESS DOOR LOCATIONS WITH GENERAL CONTRACTOR AND ARCHITECT.
7. PROVIDE SEISMIC BRACING ON PRESSURE PIPING WITHIN SHELTER. REFER TO DETAILS.

DRAWING NOTES:

1. MOUNT IEWH-2 ON WALL ABOVE CEILING. SUPPLY INTO AND OUT OF HEATER SHALL BE 3/4".
2. SHELTER PENETRATION LESS THAN 2.5" DOES NOT REQUIRE PROTECTION. ALL SHELTER PENETRATIONS SHALL COMPLY WITH ICC500 – 2020. PROVIDE PVC SLEEVE THROUGH CORE DRILLED HOLE, CENTRALLY INSTALL PRESSURE PIPING THROUGH SLEEVE AND FILL INTERSTITIAL SPACE(S) WITH FOAM INSULATION. OTHERWISE, INSULATE AS PER SPECIFICATIONS.
3. PROVIDE PERMANENT SIGN WHICH READS AS FOLLOWS: "INSULATION VALVES FOR HOT AND COLD WATER EXTERNAL TO SHELTER ARE LOCATED IN CEILING ABOVE MILLWORK IN ALCOVE OF SHELTER."

Pinnacle ENGINEERING, INC
Engineering & Design Consultants
2111 Parkway Office Circle, Suite 125
Birmingham, AL 35244
(205) 733-6912 FAX: (205) 733-6913
Job No.: 23198 File: 23198U01

LATHAN ARCHITECTS

CLASSROOM ADDITION FOR
MARGARET ELEMENTARY SCHOOL
680 COUNTY ROAD 12, ODENVILLE, ALABAMA 35120
ST. CLAIR COUNTY BOARD OF EDUCATION

ALABAMA REGISTERED No. 24075 PROFESSIONAL JAMES M. HOLLAND
1/11/24

SHEET TITLE:
FLOOR PLANS
PLUMBING

PROJ. MGR.:	JMH
DRAWN:	CRA/JSH
DATE:	JANUARY 11, 2024
REVISIONS	

JOB NO. 23-41

SHEET NO:
P1.1
2 OF 2

0 1" 2"

LEGEND

- 12x20 — DUCT SIZE, FIRST FIGURE IS SIDE SHOWN INSIDE CLEAR DIMENSION UNLESS NOTED OTHERWISE
- 24x12 — LOW PRESSURE, RECTANGULAR (GALVANIZED STEEL)
- 24x12 — LOW PRESSURE, RECTANGULAR (ALUMINUM STEEL)
- 20"ø — ROUND (GALVANIZED STEEL)
- 20x10 ⇔ — MEDIUM PRESSURE, FLAT OVAL (GALVANIZED STEEL)
- FLEXIBLE DUCT
- R — DUCT RISE
- D — DUCT DROP
- EXISTING DUCTWORK TO REMAIN
- DUCT TRANSITION
- RECTANGULAR TO ROUND DUCT TRANSITION
- TURNING VANES
- FD — FIRE DAMPER AND SLEEVE, PROVIDE ACCESS DOOR
- SD — SMOKE DAMPER AND SLEEVE, PROVIDE ACCESS DOOR
- SD/FD — COMBINATION FIRE/SMOKE DAMPER, PROVIDE ACCESS DOOR
- MANUAL VOLUME DAMPER
- STANDARD 45° BRANCH, SUPPLY OR RETURN, NO SPLITTER
- STANDARD 45° BRANCH, SUPPLY OR RETURN, NO SPLITTER, WITH MANUAL VOLUME DAMPER
- CONICAL SPIN-IN FITTING WITH BUTTERFLY DAMPER
- GRILLE OR REGISTER, CEILING
- A — ACCESS DOOR
- CHWS — CHILLED WATER SUPPLY PIPING
- CHWR — CHILLED WATER RETURN PIPING
- HWS — HOT WATER SUPPLY PIPING
- HWR — HOT WATER RETURN PIPING
- D — CONDENSATE DRAIN PIPING
- AD — AUXILIARY CONDENSATE DRAIN PIPING
- R — REFRIGERANT PIPING (2 LINES TOTAL)
- LPS(15) — LOW PRESSURE STEAM SUPPLY
- LPR — LOW PRESSURE STEAM CONDENSATE RETURN
- MPS(60) — MEDIUM PRESSURE STEAM SUPPLY
- MPR — MEDIUM PRESSURE STEAM CONDENSATE RETURN
- NAME(E) — EXISTING PIPING
- NAME(D) — EXISTING PIPING TO BE DEMOLISHED
- ELBOW, 90° (LONG RADIUS)
- TEE
- TEE, TURNED UP
- TEE TURNED DOWN
- ELBOW, TURNED DOWN
- ELBOW, TURNED UP
- GATE VALVE
- GLOBE VALVE
- BALL VALVE
- BUTTERFLY VALVE
- UNION
- T — WALL MOUNTED THERMOSTAT
- H — WALL MOUNTED HUMIDISTAT
- S — WALL MOUNTED TEMPERATURE SENSOR
- C — WALL MOUNTED CARBON DIOXIDE SENSOR
- D/G — WALL MOUNTED DEVICE W/ COVER GAURD
- SMOKE DETECTOR
- TIE NEW INTO EXISTING
- UC — UNDERCUT DOOR 3/4 INCHES
- SUPPLY AIR FLOW
- RETURN OR EXHAUST AIR FLOW

NOTE: THIS LEGEND IS FOR REFERENCE ONLY. ALL SYMBOLS WHICH APPEAR WITHIN THE LEGEND MAY NOT APPLY TO THIS PROJECT.

ABBREVIATIONS

AB.CL'G	ABOVE CEILING
ABV.	ABOVE
AC	ALTERNATING CURRENT
A/C	AIR COMPRESSOR
AFF	ABOVE FINISHED FLOOR
AHU	AIR HANDLING UNIT
AI	ANALOG INPUT
ALT.	ALTERNATE
AMP	AMPERE
AO	ANALOG OUTPUT
APPROX.	APPROXIMATELY
ARCH.	ARCHITECTURAL
AVG	AVERAGE
B	BOILER
BTU	BRITISH THERMAL UNIT
CFM	CUBIC FEET PER MINUTE
CH	CHILLER
CHWP	CHILLED WATER PUMP
CLG	CEILING
CT	COOLING TOWER
CU	CONDENSING UNIT
CWP	CONDENSER WATER PUMP
DEFL	DEFLECTION
DET.	DETAIL
DI	DIGITAL INPUT
DIA	DIAMETER
ø	DIAMETER
DO	DIGITAL OUTPUT
EDB	ENTERING DRY BULB
ELEC.	ELECTRICAL
ELEV.	ELEVATION
EWB	ENTERING WET BULB
EWT	ENTERING WATER TEMPERATURE
EXH	EXHAUST
EXIST.	EXISTING
°F	DEGREES FAHRENHEIT
GFF	GAS FIRED FURNACE
GPM	GALLONS PER MINUTE
FPM	FEET PER MINUTE
FPS	FEET PER SECOND
FT	FOOT OR FEET
HD.	HEAD
HP	HORSE POWER
HR	HOUR(S)
HT.	HEIGHT
HTR	HEATER
HVAC	HEATING, VENTILATION AND AIR CONDITIONING
HWP	HOT WATER PUMP
HX	HEAT EXCHANGER
HZ	FREQUENCY (HERTZ)
ID	INSIDE DIAMETER
IN.	INCHES
KW	KILOWATT
KWH	KILOWATT HOUR
MAX	MAXIMUM
MBH	1000 BTU PER HOUR
MECH.	MECHANICAL
MFR.	MANUFACTURER
MIN	MINIMUM
NO.	NUMBER
N/A	NOT APPLICABLE
NC	NOISE CRITERIA
O.D.	OUTSIDE DIAMETER
OA	OUTSIDE AIR
⇔	OVAL DUCTWORK
ORIG.	ORIGINAL
PH.	PHASE
PIU	POWERED INDUCTION UNIT
PRESS	PRESSURE
RTN	RETURN AIR
RTU	ROOFTOP AIR HANDLING UNIT
SDC	STAND ALONE DIGITAL CONTROLLER
SENS.	SENSIBLE
SQ.	SQUARE
SPLY	SUPPLY
TEMP	TEMPERATURE
VAV	VARIABLE AIR VOLUME
W	WATT
W/	WITH
W.P.D.	WATER PRESSURE DROP

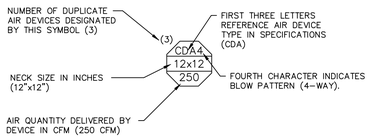

1 / M0.1 AIR DEVICE LEGEND
NO SCALE

AIR HANDLING UNIT SCHEDULE

EQUIPMENT NO.	MANUFACTURER/ MODEL NO.	CFM	OA CFM	E.S.P. (IN. W.C.)	FAN H.P.	FAN DRIVE	COOLING COIL	ELECTRIC HEAT TOTAL (KW)	ELECTRIC HEAT STAGES	ELECTRICAL MCA	ELECTRICAL MOCP	ELECTRICAL DISCONNECT	ELECTRICAL VOLTS/PH./HZ.	VIBRATION ISOLATION TYPE	VIBRATION ISOLATION DEFL. (IN.)	VIBRATION ISOLATION BASE	MOUNTING	WEIGHT (LBS.)	REMARKS
AHU-1	TRANE GAM5B0B30	900	120	0.50	1/3	--	CC-1	10	1	16.1	20	BY DIV. 16	460/3/60	2	1/2	A	VERTICAL	150	1), 3)
AHU-2	TRANE GAM5B0B30	1000	140	0.50	1/3	--	CC-2	10	1	16.1	20	BY DIV. 16	460/3/60	2	1/2	A	VERTICAL	150	1), 3)
AHU-3	TRANE GAM5B0B30	1000	150	0.50	1/3	--	CC-3	10	1	16.1	20	BY DIV. 16	460/3/60	2	1/2	A	VERTICAL	150	1), 3)
AHU-4	TRANE GAM5B0B30	900	120	0.50	1/3	--	CC-4	10	1	16.1	20	BY DIV. 16	460/3/60	2	1/2	A	VERTICAL	150	1), 2), 3)

REMARKS:
1) PROVIDE STEP-DOWN TRANSFORMER TO POWER AIR HANDLER.
2) PROVIDE UNIT WITH LONG LINE SET.
3) PROVIDE WITH AIR PURIFICATION UNIT. SEE SCHEDULE THIS SHEET.

OUTDOOR HEAT PUMP SCHEDULE

EQUIPMENT NO.	MANUFACTURER/ MODEL NO.	SERVICE	COOLING CAPACITY NOMINAL (TONS)	COOLING CAPACITY AMBIENT TEMP. (F)	HEATING CAPACITY MBH	HEATING CAPACITY AMBIENT TEMP. (F)	ELECTRICAL UNIT MCA	ELECTRICAL UNIT MOCP	ELECTRICAL DISCONNECT	ELECTRICAL VOLTS/PH./HZ.	VIBRATION ISOLATION TYPE	VIBRATION ISOLATION DEFL. (IN.)	VIBRATION ISOLATION BASE	SEER	HSPF	WEIGHT (LBS.)	REMARKS
HP-1	TRANE 4TWR4030	AHU-1	2.5	95	26.0	47	15	25	BY DIV. 16	460/3/60	--	--	--	14.6	7.5	175	1)
HP-2	TRANE 4TWR4030	AHU-2	2.5	95	26.0	47	15	25	BY DIV. 16	460/3/60	--	--	--	14.6	7.5	175	1)
HP-3	TRANE 4TWR4030	AHU-3	2.5	95	26.0	47	15	25	BY DIV. 16	460/3/60	--	--	--	14.6	7.5	175	1)
HP-4	TRANE 4TWR4030	AHU-4	2.5	95	26.0	47	15	25	BY DIV. 16	460/3/60	--	--	--	14.6	7.5	175	1)

REMARKS:
1) NEW HEAT PUMP TO BE LOCATED ON HOUSEKEEPING PAD.

COIL SCHEDULE

EQUIPMENT NO.	TYPE	ROWS (MIN.)	MAXIMUM FINS PER FOOT	MAXIMUM FACE VEL. (FPM)	AIR CFM	AIR EDB (°F)	AIR EWB (°F)	AIR LDB (°F)	AIR LWB (°F)	AIR PRESSURE DROP (IN. W.C.)	DX REFRIG. TYPE	REMARKS
CC-1	DIRECT EXPANSION	--	--	--	1750	77	65	56.6	55.3	--	R-410A	1)
CC-2	DIRECT EXPANSION	--	--	--	1750	77	65	56.6	55.3	--	R-410A	1)
CC-3	DIRECT EXPANSION	--	--	--	1600	77	65	56.6	55.3	--	R-410A	1)
CC-4	DIRECT EXPANSION	--	--	--	1200	77	65	56.6	55.3	--	R-410A	1)

REMARKS:
1) FURNISHED WITH UNIT

POWER VENTILATOR SCHEDULE

EQUIPMENT NO.	MANUFACTURER/ MODEL NO.	SERVICE	CFM	E.S.P. (IN. W.C.)	RPM	MAX. SONES	ELECTRICAL DISCONNECT	ELECTRICAL MOTOR STARTER	ELECTRICAL WATTS	ELECTRICAL MOTOR VOLTS/PH./HZ.	LOCATION	TYPE	DRIVE	VIBRATION ISOLATION TYPE	VIBRATION ISOLATION DEFL. (IN.)	VIBRATION ISOLATION BASE	WGT (LBS.)	REMARKS
EF-1	COOK GC-146	TOILET 106	70	0.25	900	1.4	BY DIV. 16	INTEGRAL	.313 A	120/1/60	CEILING	CENTRIFUGAL	DIRECT	--	--	--	15	1), 2), 4), 5)
VF-1	COOK GN-720	SHELTER VENTILATION	500	0.5	1273	4.0	BY DIV. 16	INTEGRAL	183	120/1/60	INLINE	CENTRIFUGAL	DIRECT	2	1/2	A	35	1), 3), 4), 5)

REMARKS:
1) PROVIDE MANUFACTURER'S FAN SPEED CONTROLLER AND BACKDRAFT DAMPER.
2) INTERLOCK WITH LOCAL LIGHTING CONTROLS.
3) INTERLOCK WITH MANUAL SWITCH.
4) PROVIDE EC MOTOR.
5) PROVIDE FAN ON SHELTER BACKUP POWER.

AIR PURIFICATION UNIT SCHEDULE

EQUIPMENT NO.	MANUFACTURER/ MODEL NO.	UNIT SERVED	SUPPLY CFM	O.A. CFM	PRESS. DROP (IN. W.C.)	MINIMUM ION DENSITY (IONS/CC @ 1")	MOUNTING LOCATION	ELECTRICAL VOLTS	ELECTRICAL WATTS	REMARKS
APU-AHU-1	GPS FC24-AC	AHU-1	900	120	0.01	160 MILLION	INSIDE UNIT	24	12	1), 2), 3)
APU-AHU-2	GPS FC24-AC	AHU-2	1000	140	0.01	160 MILLION	INSIDE UNIT	24	12	1), 2), 3)
APU-AHU-3	GPS FC24-AC	AHU-3	1000	150	0.01	160 MILLION	INSIDE UNIT	24	12	1), 2), 3)
APU-AHU-4	GPS FC24-AC	AHU-4	900	120	0.01	160 MILLION	INSIDE UNIT	24	12	1), 2), 3)

REMARKS:
1) INSTALL IN ACCORDANCE WITH MANUFACTURER'S INSTRUCTIONS.
2) POWER SHALL BE PROVIDED BY UNIT ON WHICH IT IS INSTALLED. PROVIDE TRANSFORMER AS NECESSARY.
3) SHALL BE INTERLOCKED WITH FAN OPERATION.

SHELTER OCCUPANCY

SPACE	OCC.	CFM/ PERSON	VENTILATION REQUIRED (CFM)	VENTILATION PROVIDED (CFM)
SHELTER	100	5	500	500

AIR BALANCE SCHEDULE

DESCRIPTION	O.A. CFM (+ = POS.) (- = NEG.)	REMARKS
AHU-1	(+) 120	.
AHU-2	(+) 140	.
AHU-3	(+) 150	.
AHU-4	(+) 120	.
EXHAUST AIR FROM RESTROOMS/OTHER	(-) 70	.
TOTAL BUILDING AIR PRESSURE	(+) 460	1)

REMARKS:
1) WITH ALL EXHAUST FANS OPERATING AND DURING OCCUPIED MODE ALL OA DAMPERS OPEN, NET BUILDING IS POSITIVE 460 CFM.

Pinnacle ENGINEERING INC
Engineering & Design Consultants
2111 Parkway Office Circle, Suite 125
Birmingham, AL 35244
(205) 733-6912 FAX: (205) 733-6913
Job No.: 23198 File: 23198D01

LATHAN ARCHITECTS

CLASSROOM ADDITION FOR
MARGARET ELEMENTARY SCHOOL
680 COUNTY ROAD 12, ODENVILLE, ALABAMA 35120
ST. CLAIR COUNTY BOARD OF EDUCATION

ALABAMA REGISTERED No. 24075 PROFESSIONAL JAMES M. HOWELL ENGINEER
1/11/24

SHEET TITLE:
MECHANICAL LEGEND, ABBREVIATIONS, AND SCHEDULES

PROJ. MGR.: JMH
DRAWN: CRA/JSH
DATE: JANUARY 11, 2024
REVISIONS

JOB NO. 23-41
SHEET NO:
M0.1
1 OF 5

0 1" 2"

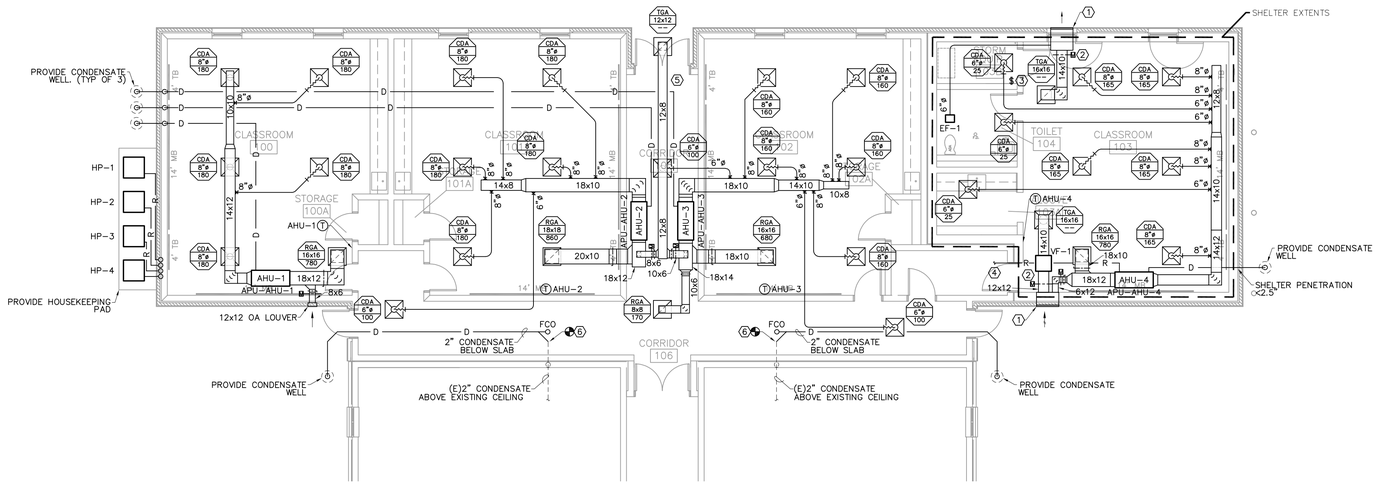

FLOOR PLAN
MECHANICAL

NORTH

0 2 4 6 8 16

SCALE: 1/8" = 1'-0"

GENERAL NOTES:

1. VERIFY EXISTING CONDITIONS IN FIELD PRIOR TO BEGINNING WORK.
2. SPACE ABOVE CEILING IS LIMITED. CAREFUL COORDINATION WITH LIGHTING, ELECTRICAL, PLUMBING, STRUCTURAL, AND ARCHITECTURAL WORK IS CRITICAL TO DUCTWORK INSTALLATION.
3. PROVIDE NECESSARY OFFSETS IN PIPING, ELECTRICAL CONDUIT, AND DUCTWORK AS REQUIRED TO ACCOMMODATE NEW WORK. DRAWINGS ARE DIAGRAMMATIC AND DO NOT SHOW ALL DETAILS NOR CHANGES IN DUCTWORK ELEVATIONS NECESSARY FOR COMPLETE INSTALLATION.
4. COORDINATE CEILING AIR DEVICE LOCATIONS WITH LIGHTING PLAN AND ARCHITECT'S REFLECTED CEILING PLAN.
5. DUCTWORK SHALL BE RUN TIGHT TO STRUCTURE. AVOID CROSSING OVER LIGHTS AND OTHER DUCTS DUE TO TIGHT CLEARANCES.
6. RETURN GRILLES SHALL BE TYPE A, 22"x22", UNLESS NOTED OTHERWISE.
7. COORDINATE EXACT SIZE, LOCATION, AND COLOR OF WALL MOUNTED LOUVERS WITH ARCHITECT PRIOR TO ORDERING.
8. MOUNT TEMPERATURE CONTROLS 48" ABOVE FINISHED FLOOR. COORDINATE EXACT LOCATION WITH ARCHITECT.
9. SPILL CONDENSATE FROM AHUs INTO CONDENSATE WELL AS SHOWN.
10. PROVIDE AUXILIARY CONDENSATE DRAIN PAN, SUSPENDED FROM STRUCTURE BELOW AHU. PANS SHALL BE 14 GA. GALVANIZED STEEL WELDED CONSTRUCTION, 2" DEEP, EXTENDING 3" BEYOND THE PERIMETER OF THE UNIT.
12. BALANCE CEILING AIR DEVICES TO VALUES SHOWN ON THIS DRAWING.
13. PROVIDE ACCESS DOOR IN DUCT OR PLENUM FOR STORM LOUVER LABEL INSPECTION BY STATE INSPECTOR. INSTALL STORM LOUVER WITH LABEL VIEWABLE FROM ACCESS DOOR.
14. FOR REFRIGERANT AND CONDENSATE PIPING PENETRATIONS, CORE DRILL SHELTER WALL AND INSTALL PENETRATING PIPE CENTRALLY AND FILL INTERSTITIAL SPACE WITH FOAM INSULATION. OTHERWISE INSTALL AND INSULATE AS PER SPECIFICATIONS.
15. PROVIDE SEISMIC BRACING ON ALL DUCTWORK AND EQUIPMENT WITHIN THE SHELTER. REFER TO DETAILS.

GENERAL NOTES:

1. PROVIDE 30x18 WIND DRIVEN RAIN STORM RATED LOUVER AT EXTERIOR FACE OF WALL. ANCHOR TO WALL IN ACCORDANCE WITH MANUFACTURER'S INSTRUCTIONS. LOUVER SHALL BE RUSKIN MODEL XP500WD OR EQUAL. PROVIDE INSULATED DUCT SLEEVE PLENUM ON LOUVER.
2. PROVIDE MOTOR OPERATED DAMPER. DAMPER SHALL BE NORMALLY OPEN AND RETURN TO NORMAL POSITION UPON LOSS OF POWER. DAMPER SHALL OPEN WHEN VENTILATION FAN IS ENERGIZED OR UPON LOSS OF POWER.
3. PROVIDE WALL MOUNTED, MANUAL START/STOP SWITCH WITH PILOT LIGHT FOR STORM SHELTER VENTILATION FAN VF-1, ITS MOTORIZED DAMPER AND TRANSFER AIR MOTORIZED DAMPERS. PROVIDE ENGRAVED NAMEPLATE INDICATING "STORM SHELTER VENTILATION FAN SWITCH INSIDE EQUIPMENT ROOM" ON WALL DIRECTLY OUTSIDE OF SHELTER EQUIPMENT ROOM.
4. EACH REFRIGERANT LINE PENETRATES SHELTER WALL SEPARATELY. PENETRATIONS TO BE LESS THAN 2.5" IN DIAMETER. PENETRATIONS FROM A SINGLE UNIT TO BE MINIMUM 4" ON CENTER. SHELTER PENETRATIONS SHALL COMPLY WITH ICC500 – 2020.
5. OUTSIDE AIR DUCT TO BE MOUNTED HIGH IN CEILING TO MAINTAIN MAINTENANCE CLEARANCE FOR THE AIR HANDLING UNITS IN THE AREA.
6. INTERCEPT EXISTING 2" CONDENSATE DRAIN LINE UNDERGROUND AND RE-ROUTE AS SHOWN.

Pinnacle ENGINEERING INC
Engineering & Design Consultants
2111 Parkway Office Circle, Suite 125
Birmingham, AL 35244
(205) 733-6912 FAX: (205) 733-6913
Job No.: 23198 File: 23198M01

LATHAN ARCHITECTS

CLASSROOM ADDITION FOR
MARGARET ELEMENTARY SCHOOL
680 COUNTY ROAD 12, ODENVILLE, ALABAMA 35120
ST. CLAIR COUNTY BOARD OF EDUCATION

ALABAMA REGISTERED No. 24075 PROFESSIONAL JAMES M. HOLLAND ENGINEER
1/11/24

SHEET TITLE:
FLOOR PLAN
MECHANICAL

PROJ. MGR.:	JMH
DRAWN:	CRA/JSH
DATE:	JANUARY 11, 2024
REVISIONS	

JOB NO. 23-41

SHEET NO:
M1.1
2 OF 5

0 1" 2"

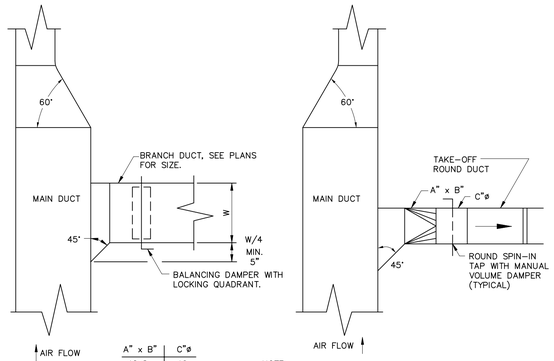

A" x B"	C"ø
12x8	10
12x10	12
16x10	14
22x10	16

NOTE:
USE 45° BRANCH FITTING WHEN MAIN SUPPLY DUCT DEPTH IS EQUAL TO OR SMALLER THAN TAKE-OFF ROUND DUCT SIZE.

7 M2.1 TYPICAL DUCT TAKEOFF DETAIL
NO SCALE

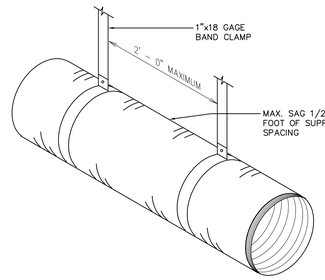

8 M2.1 FLEXIBLE DUCT SUPPORT DETAIL
NO SCALE

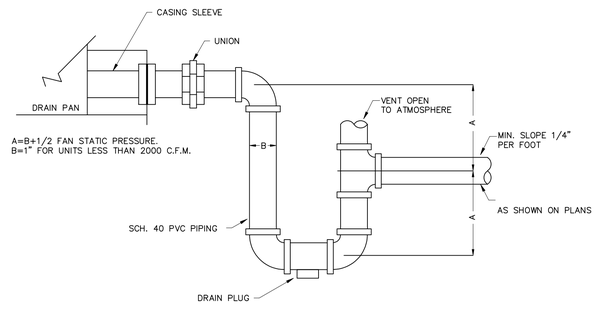

9 M2.1 CONDENSATE DRAIN TRAP DETAIL
NO SCALE

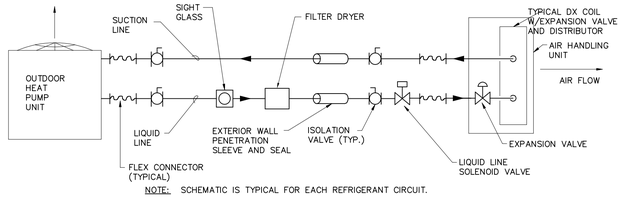

NOTE: SCHEMATIC IS TYPICAL FOR EACH REFRIGERANT CIRCUIT.

4 M2.1 REFRIGERANT PIPING DETAIL
NO SCALE

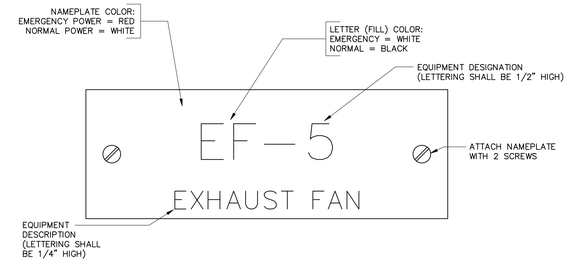

1 M2.1 MECHANICAL EQUIPMENT NAMEPLATE DETAIL
NO SCALE

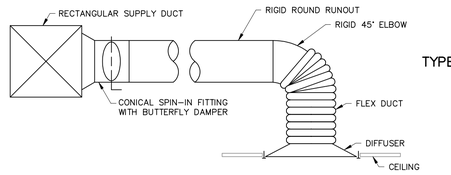

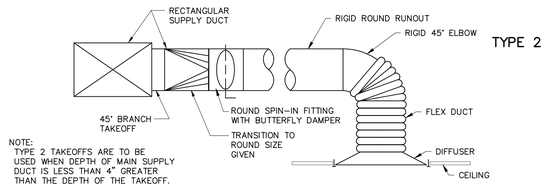

NOTE:
TYPE 2 TAKEOFFS ARE TO BE USED WHEN DEPTH OF MAIN SUPPLY DUCT IS LESS THAN 4" GREATER THAN THE DEPTH OF THE TAKEOFF.

5 M2.1 TYPICAL DIFFUSER RUN-OUT DETAIL
NO SCALE

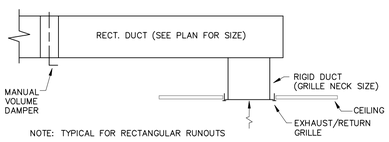

NOTE: TYPICAL FOR RECTANGULAR RUNOUTS

6 M2.1 TYPICAL RETURN AND EXHAUST RUN-OUT DETAIL
NO SCALE

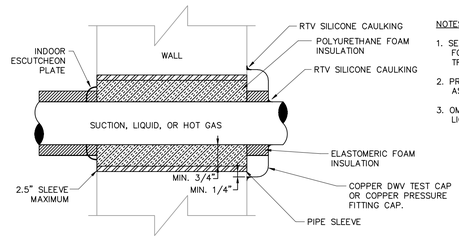

NOTES:
1. SEAL OPENING WITH POLYURETHANE FOAM, EQUAL TO VERSI-FOAM TRIM OFF EXCESS FOAM.
2. PROVIDE INTERMEDIATE SUPPORTS AS REQUIRED.
3. OMIT ELASTOMERIC INSULATION ON LIQUID LINE.

2 M2.1 REFRIGERANT LINE – WALL PENETRATION DETAIL
NO SCALE

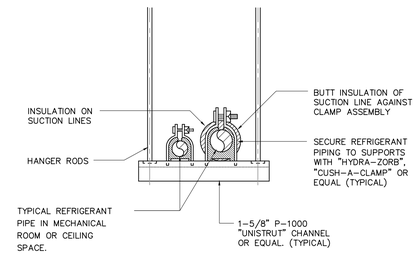

3 M2.1 REFRIGERANT PIPING SUPPORT DETAIL
TYPICAL FOR PIPING SUSPENDED FROM STRUCTURE
NO SCALE

LATHAN ARCHITECTS

CLASSROOM ADDITION FOR
MARGARET ELEMENTARY SCHOOL
680 COUNTY ROAD 12, ODENVILLE, ALABAMA 35120
ST. CLAIR COUNTY BOARD OF EDUCATION

ALABAMA REGISTERED No. 24075 PROFESSIONAL ENGINEER JAMES M. ROBERTS
1/11/24

SHEET TITLE:
MECHANICAL DETAILS

PROJ. MGR.:	JMH
DRAWN:	CRA/JSH
DATE:	JANUARY 11, 2024
REVISIONS	

JOB NO. 23-41
SHEET NO:
M2.1
3 OF 5

Pinnacle ENGINEERING, INC
Engineering & Design Consultants
2111 Parkway Office Circle, Suite 125
Birmingham, AL 35244
(205) 733-6912 FAX: (205) 733-6913
Job No.: 23198 File: 23198D01

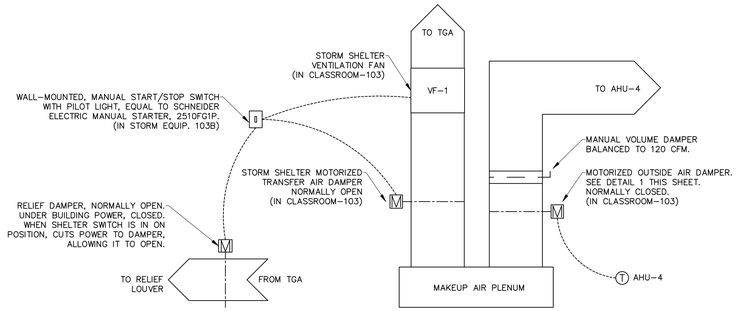

NOTES:
1) PROVIDE PERMANENT SIGN ABOVE MANUAL START/STOP SWITCH. SIGN SHALL READ AS FOLLOWS: "WHEN SHELTER IS IN USE, TURN SWITCH ON (UP) TO ENGAGE SHELTER VENTILATION SYSTEM. WHEN SHELTER USE HAS ENDED, TURN SWITCH OFF (DOWN) TO DIS-ENGAGE SYSTEM."
2) PROVIDE ANY NECESSARY TRANSFORMER(S) AND/OR CONTACTOR(S) TO START VF-1, OPEN ITS MOTORIZED DAMPER AND OPEN THE TRANSFER AIR DAMPERS, UPON THE ACTIVATION/DEACTIVATION OF START/STOP SWITCH.
3) ALL DAMPERS SHALL BE 24v AS PER SPECIFICATIONS. TEMPERATURE CONTROLS CONTRACTOR SHALL PROVIDE TRANSFORMER AS NECESSARY TO PROVIDE POWER TO THE ACTUATORS. COORDINATE CLOSELY WITH ELECTRICAL CONTRACTOR.

4 / M2.2 SHELTER CONTROL DIAGRAM
NO SCALE

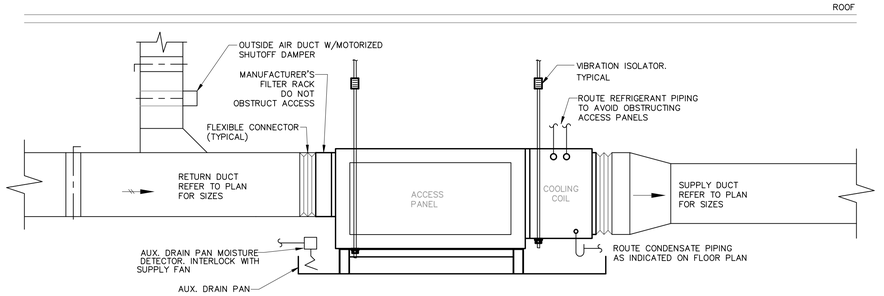

1 / M2.2 INDOOR HEAT PUMP UNIT DETAIL
NO SCALE

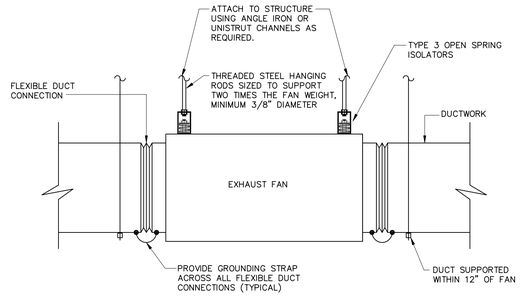

2 / M2.2 INLINE EXHAUST FAN DETAIL
NO SCALE

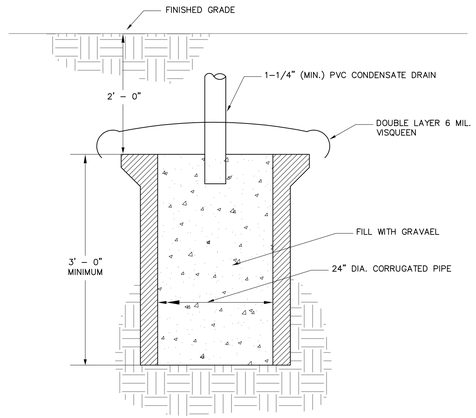

5 / M2.2 CONDENSATE DISPOSAL WELL DETAIL
NO SCALE

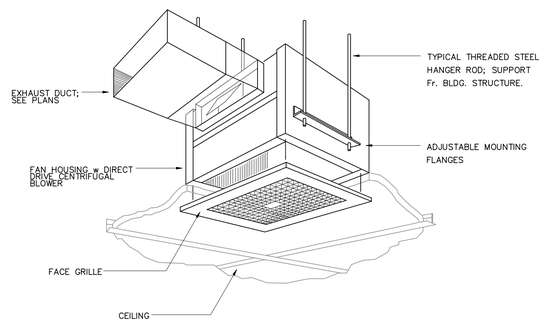

3 / M2.2 EXHAUST FAN INSTALLATION DETAIL(CEILING)
NO SCALE

Pinnacle ENGINEERING INC
Engineering & Design Consultants
2111 Parkway Office Circle, Suite 125
Birmingham, AL 35244
(205) 733-6912 FAX: (205) 733-6913
Job No.: 23198 File: 23198D01

LATHAN ARCHITECTS

CLASSROOM ADDITION FOR
MARGARET ELEMENTARY SCHOOL
680 COUNTY ROAD 12, ODENVILLE, ALABAMA 35120
ST. CLAIR COUNTY BOARD OF EDUCATION

ALABAMA REGISTERED No. 24075 PROFESSIONAL ENGINEER JAMES M. HOLLAND
1/11/24

SHEET TITLE:
MECHANICAL DETAILS

PROJ. MGR.:	JMH
DRAWN:	CRA/JSH
DATE:	JANUARY 11, 2024
REVISIONS	

JOB NO. 23-41
SHEET NO:
M2.2
4 OF 5
0 1" 2"

OUTSIDE AIR CALCULATION - AHU-1

Zone Tag	Facility Type	Zone Use	Zone Floor Area (square ft) Az	Zone Max Occupancy Pz	Table 6.1 OA CFM per Occupant Rp	Table 6.1 cfm/ft2 Ra	Pz * Rp Pz * Rp	Az * Ra Az * Ra	Table 6.2 Ventilation Effectiveness Ez	Outdoor Air to Zone (CFM) with Ez correction (Vbz/Ez)
AHU-1	Educational Facilities	Classrooms (ages 5-8)	662.0	17	10.0	0.12	170	79	0.8	312 OA required per VRP

Zone Height (feet)	9.0	Air Changes Per Hour	9.1
Desired Outside Air (Vo) IAQP (CFM	120	Outside Air Per VRP	312 CFM
Supply Air Full Flow (Vs) (CFM)	900	Outside Air Per IAQ	120 CFM
Supply Air Minimum Flow (Vs) (CFM	270	Outside Air Savings	192 CFM
Return Air (Vr) (CFM)	780	OA Summer Drybulb	95.0
Recirc. Flow Factor (R)	0.87	OA Summer Wetbulb	78.0
Design Flow Reduction Factor (R	0.30	Coil Leaving Air Drybulb (F)	55.0
Ventilation Effectiveness (Ez)	0.8	Coil Leaving Air Wetbulb (F)	54.4
Level of Physical Activity	Standing (desk work)	OA MBH Saved Summer*	#NAME?
Filter Location	B	OA Tons Saved Summer*	#NAME?
HVAC Flow Type	VAV		
Outdoor Air Flow Type	Constant		

VRP OA CFM per person	18.3
IAQ OA CFM per person	7.1
Winter Heating Savings	
OA Winter Design DB (F)	40
Supply Air DB Setpoint (F)	95
MBH Saved Winter	11.4
KW Saved Winter	3.4

*OA = Outside Air

***OSHA, NIOSH & WHO most conservative values us
http://www.cdc.gov/niosh/npg/npgsyn-a.html

Indoor Contaminants Generated By People & From Outdoors	Maximum Threshold Value (PPM)	Steady State (lb/ft3) Using the VRP* (Prescribed OA) Plasma Off	Steady State (lb/ft3) Using the IAQ Method (Reduced OA) Plasma On	Is Steady State Level Acceptable at Reduced OA Levels?	Contaminant Generation Rate (lb/person/min)	Filtration Effectiveness	Cognizant Authority***
Acetaldehyde	100.0	2.58E-09	2.21E-09	Yes	1.95E-08	50%	OSHA
Acetone	250.0	1.36E-08	1.89E-08	Yes	1.96E-07	50%	NIOSH
Ammonia	25.00	3.14E-07	4.42E-07	Yes	4.61E-06	50%	NIOSH
Benzene	1.00	1.55E-08	2.13E-08	Yes	2.21E-07	50%	OSHA
2- Butanone (MEK)	200.0	9.10E-07	1.28E-06	Yes	1.33E-05	50%	NIOSH
Carbon dioxide**	5000	4.75E-05	5.16E-05	Yes	3.73E-05	0%	NIOSH
Chloroform	2.0	2.82E-08	3.96E-08	Yes	4.13E-07	50%	NIOSH
Dioxane	100.0	0.00E+00	0.00E+00	Yes	0.00E+00	50%	OSHA
Hydrogen Sulfide	10.0	0.00E+00	0.00E+00	Yes	0.00E+00	50%	NIOSH
Methane	NA	6.87E-08	6.87E-08	Yes	0.00E+00	0%	NA
Methanol	200.0	1.15E-08	2.99E-08	Yes	1.69E-07	0%	NIOSH
Methylene Chloride	25.0	8.26E-07	1.16E-06	Yes	1.21E-05	50%	OSHA
Propane	1000.0	1.12E-09	1.12E-09	Yes	0.00E+00	0%	NIOSH
Tetrachloroethane	5.0	0.00E+00	0.00E+00	Yes	0.00E+00	50%	OSHA
Tetrachloroethylene	100.0	9.38E-07	1.32E-06	Yes	1.38E-05	50%	OSHA
Toluene	100.0	3.60E-09	3.64E-09	Yes	3.44E-08	50%	NIOSH
1,1,1 - Trichloroethane	350.0	3.94E-05	5.56E-05	Yes	5.79E-04	50%	NIOSH
Xylene	100.0	6.25E-10	1.69E-10	Yes	0.00E+00	50%	OSHA

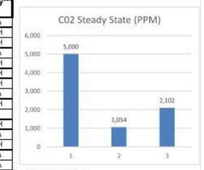

1 = NIOSH C02 Limit
2 = C02 Level at Ventilation Rate OA Flow Rate
3 = C02 Level at IAQ Procedure OA Flow Rate

**Carbon dioxide has been provided for reference only for gathering demand control ventilation (DCV) setpoints. The National Research Council was commissioned by the US Navy to prove C02 is not a contaminant of concern when using air purification to control the other contaminants of concern, as found on submarines.

Building materials and furnishings assumed to have no VOCs and off-gassing is complete
All yellow shaded boxes require user input or review

Is IAQ acceptable at reduced outside air levels? Yes

NOTE: OCCUPANCY BASED OFF MAX LISTED IN IMC 403.3.1.1

OUTSIDE AIR CALCULATION - AHU-2

Zone Tag	Facility Type	Zone Use	Zone Floor Area (square ft) Az	Zone Max Occupancy Pz	Table 6.1 OA CFM per Occupant Rp	Table 6.1 cfm/ft2 Ra	Pz * Rp Pz * Rp	Az * Ra Az * Ra	Table 6.2 Ventilation Effectiveness Ez	Outdoor Air to Zone (CFM) with Ez correction (Vbz/Ez)
AHU-2	Educational Facilities	Classrooms (ages 5-8)	681.0	17	10.0	0.12	170	82	0.8	315 OA required per VRP

Zone Height (feet)	9.0	Air Changes Per Hour	9.8
Desired Outside Air (Vo) IAQP (CFM	140	Outside Air Per VRP	315 CFM
Supply Air Full Flow (Vs) (CFM)	1,000	Outside Air Per IAQ	140 CFM
Supply Air Minimum Flow (Vs) (CFM	300	Outside Air Savings	175 CFM
Return Air (Vr) (CFM)	860	OA Summer Drybulb	95.0
Recirc. Flow Factor (R)	0.86	OA Summer Wetbulb	78.0
Design Flow Reduction Factor (R	0.30	Coil Leaving Air Drybulb (F)	55.0
Ventilation Effectiveness (Ez)	0.8	Coil Leaving Air Wetbulb (F)	54.4
Level of Physical Activity	Standing (desk work)	OA MBH Saved Summer*	#NAME?
Filter Location	B	OA Tons Saved Summer*	#NAME?
HVAC Flow Type	VAV		
Outdoor Air Flow Type	Constant		

VRP OA CFM per person	18.5
IAQ OA CFM per person	8.2
Winter Heating Savings	
OA Winter Design DB (F)	40
Supply Air DB Setpoint (F)	95
MBH Saved Winter	10.4
KW Saved Winter	3.1

*OA = Outside Air

***OSHA, NIOSH & WHO most conservative values us
http://www.cdc.gov/niosh/npg/npgsyn-a.html

Indoor Contaminants Generated By People & From Outdoors	Maximum Threshold Value (PPM)	Steady State (lb/ft3) Using the VRP* (Prescribed OA) Plasma Off	Steady State (lb/ft3) Using the IAQ Method (Reduced OA) Plasma On	Is Steady State Level Acceptable at Reduced OA Levels?	Contaminant Generation Rate (lb/person/min)	Filtration Effectiveness	Cognizant Authority***
Acetaldehyde	100.0	2.57E-09	2.00E-09	Yes	1.95E-08	50%	OSHA
Acetone	250.0	1.34E-08	1.67E-08	Yes	1.96E-07	50%	NIOSH
Ammonia	25.00	3.11E-07	3.90E-07	Yes	4.61E-06	50%	NIOSH
Benzene	1.00	1.54E-08	1.88E-08	Yes	2.21E-07	50%	OSHA
2- Butanone (MEK)	200.0	9.02E-07	1.13E-06	Yes	1.33E-05	50%	NIOSH
Carbon dioxide**	5000	4.75E-05	5.06E-05	Yes	3.73E-05	0%	NIOSH
Chloroform	2.0	2.79E-08	3.50E-08	Yes	4.13E-07	50%	NIOSH
Dioxane	100.0	0.00E+00	0.00E+00	Yes	0.00E+00	50%	OSHA
Hydrogen Sulfide	10.0	0.00E+00	0.00E+00	Yes	0.00E+00	50%	NIOSH
Methane	NA	6.87E-08	6.87E-08	Yes	0.00E+00	0%	NA
Methanol	200.0	1.14E-08	2.56E-08	Yes	1.69E-07	0%	NIOSH
Methylene Chloride	25.0	8.19E-07	1.03E-06	Yes	1.21E-05	50%	OSHA
Propane	1000.0	1.12E-09	1.12E-09	Yes	0.00E+00	0%	NIOSH
Tetrachloroethane	5.0	0.00E+00	0.00E+00	Yes	0.00E+00	50%	OSHA
Tetrachloroethylene	100.0	9.30E-07	1.17E-06	Yes	1.38E-05	50%	OSHA
Toluene	100.0	3.58E-09	3.26E-09	Yes	3.44E-08	50%	NIOSH
1,1,1 - Trichloroethane	350.0	3.91E-05	4.90E-05	Yes	5.79E-04	50%	NIOSH
Xylene	100.0	6.25E-10	1.74E-10	Yes	0.00E+00	50%	OSHA

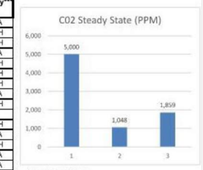

1 = NIOSH C02 Limit
2 = C02 Level at Ventilation Rate OA Flow Rate
3 = C02 Level at IAQ Procedure OA Flow Rate

**Carbon dioxide has been provided for reference only for gathering demand control ventilation (DCV) setpoints. The National Research Council was commissioned by the US Navy to prove C02 is not a contaminant of concern when using air purification to control the other contaminants of concern, as found on submarines.

Building materials and furnishings assumed to have no VOCs and off-gassing is complete
All yellow shaded boxes require user input or review

Is IAQ acceptable at reduced outside air levels? Yes

NOTE: OCCUPANCY BASED OFF MAX LISTED IN IMC 403.3.1.1

OUTSIDE AIR CALCULATION - AHU-3

Zone Tag	Facility Type	Zone Use	Zone Floor Area (square ft) Az	Zone Max Occupancy Pz	Table 6.1 OA CFM per Occupant Rp	Table 6.1 cfm/ft2 Ra	Pz * Rp Pz * Rp	Az * Ra Az * Ra	Table 6.2 Ventilation Effectiveness Ez	Outdoor Air to Zone (CFM) with Ez correction (Vbz/Ez)
AHU-3	Educational Facilities	Classrooms (ages 5-8)	650.0	16	10.0	0.12	160	78	0.8	298 OA required per VRP

Zone Height (feet)	9.0	Air Changes Per Hour	10.3
Desired Outside Air (Vo) IAQP (CFM	150	Outside Air Per VRP	298 CFM
Supply Air Full Flow (Vs) (CFM)	1,000	Outside Air Per IAQ	150 CFM
Supply Air Minimum Flow (Vs) (CFM	300	Outside Air Savings	148 CFM
Return Air (Vr) (CFM)	850	OA Summer Drybulb	95.0
Recirc. Flow Factor (R)	0.85	OA Summer Wetbulb	78.0
Design Flow Reduction Factor (R	0.30	Coil Leaving Air Drybulb (F)	55.0
Ventilation Effectiveness (Ez)	0.8	Coil Leaving Air Wetbulb (F)	54.4
Level of Physical Activity	Standing (desk work)	OA MBH Saved Summer*	#NAME?
Filter Location	B	OA Tons Saved Summer*	#NAME?
HVAC Flow Type	VAV		
Outdoor Air Flow Type	Constant		

VRP OA CFM per person	18.6
IAQ OA CFM per person	9.4
Winter Heating Savings	
OA Winter Design DB (F)	40
Supply Air DB Setpoint (F)	95
MBH Saved Winter	8.8
KW Saved Winter	2.6

*OA = Outside Air

***OSHA, NIOSH & WHO most conservative values us
http://www.cdc.gov/niosh/npg/npgsyn-a.html

Indoor Contaminants Generated By People & From Outdoors	Maximum Threshold Value (PPM)	Steady State (lb/ft3) Using the VRP* (Prescribed OA) Plasma Off	Steady State (lb/ft3) Using the IAQ Method (Reduced OA) Plasma On	Is Steady State Level Acceptable at Reduced OA Levels?	Contaminant Generation Rate (lb/person/min)	Filtration Effectiveness	Cognizant Authority***
Acetaldehyde	100.0	2.56E-09	1.87E-09	Yes	1.95E-08	50%	OSHA
Acetone	250.0	1.34E-08	1.52E-08	Yes	1.96E-07	50%	NIOSH
Ammonia	25.00	3.10E-07	3.57E-07	Yes	4.61E-06	50%	NIOSH
Benzene	1.00	1.53E-08	1.72E-08	Yes	2.21E-07	50%	OSHA
2- Butanone (MEK)	200.0	8.97E-07	1.03E-06	Yes	1.33E-05	50%	NIOSH
Carbon dioxide**	5000	4.75E-05	4.99E-05	Yes	3.73E-05	0%	NIOSH
Chloroform	2.0	2.78E-08	3.20E-08	Yes	4.13E-07	50%	NIOSH
Dioxane	100.0	0.00E+00	0.00E+00	Yes	0.00E+00	50%	OSHA
Hydrogen Sulfide	10.0	0.00E+00	0.00E+00	Yes	0.00E+00	50%	NIOSH
Methane	NA	6.87E-08	6.87E-08	Yes	0.00E+00	0%	NA
Methanol	200.0	1.13E-08	2.25E-08	Yes	1.69E-07	0%	NIOSH
Methylene Chloride	25.0	8.15E-07	9.38E-07	Yes	1.21E-05	50%	OSHA
Propane	1000.0	1.12E-09	1.12E-09	Yes	0.00E+00	0%	NIOSH
Tetrachloroethane	5.0	0.00E+00	0.00E+00	Yes	0.00E+00	50%	OSHA
Tetrachloroethylene	100.0	9.25E-07	1.07E-06	Yes	1.38E-05	50%	OSHA
Toluene	100.0	3.56E-09	3.03E-09	Yes	3.44E-08	50%	NIOSH
1,1,1 - Trichloroethane	350.0	3.89E-05	4.48E-05	Yes	5.79E-04	50%	NIOSH
Xylene	100.0	6.25E-10	1.81E-10	Yes	0.00E+00	50%	OSHA

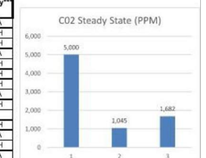

1 = NIOSH C02 Limit
2 = C02 Level at Ventilation Rate OA Flow Rate
3 = C02 Level at IAQ Procedure OA Flow Rate

**Carbon dioxide has been provided for reference only for gathering demand control ventilation (DCV) setpoints. The National Research Council was commissioned by the US Navy to prove C02 is not a contaminant of concern when using air purification to control the other contaminants of concern, as found on submarines.

Building materials and furnishings assumed to have no VOCs and off-gassing is complete
All yellow shaded boxes require user input or review

Is IAQ acceptable at reduced outside air levels? Yes

NOTE: OCCUPANCY BASED OFF MAX LISTED IN IMC 403.3.1.1

OUTSIDE AIR CALCULATION - AHU-4

Zone Tag	Facility Type	Zone Use	Zone Floor Area (square ft) Az	Zone Max Occupancy Pz	Table 6.1 OA CFM per Occupant Rp	Table 6.1 cfm/ft2 Ra	Pz * Rp Pz * Rp	Az * Ra Az * Ra	Table 6.2 Ventilation Effectiveness Ez	Outdoor Air to Zone (CFM) with Ez correction (Vbz/Ez)
AHU-4	Educational Facilities	Classrooms (ages 5-8)	710.0	18	10.0	0.12	180	85	0.8	332 OA required per VRP

Zone Height (feet)	9.0	Air Changes Per Hour	8.5
Desired Outside Air (Vo) IAQP (CFM	120	Outside Air Per VRP	332 CFM
Supply Air Full Flow (Vs) (CFM)	900	Outside Air Per IAQ	120 CFM
Supply Air Minimum Flow (Vs) (CFM	270	Outside Air Savings	212 CFM
Return Air (Vr) (CFM)	780	OA Summer Drybulb	95.0
Recirc. Flow Factor (R)	0.87	OA Summer Wetbulb	78.0
Design Flow Reduction Factor (R	0.30	Coil Leaving Air Drybulb (F)	55.0
Ventilation Effectiveness (Ez)	0.8	Coil Leaving Air Wetbulb (F)	54.4
Level of Physical Activity	Standing (desk work)	OA MBH Saved Summer*	#NAME?
Filter Location	B	OA Tons Saved Summer*	#NAME?
HVAC Flow Type	VAV		
Outdoor Air Flow Type	Constant		

VRP OA CFM per person	18.4
IAQ OA CFM per person	6.7
Winter Heating Savings	
OA Winter Design DB (F)	40
Supply Air DB Setpoint (F)	95
MBH Saved Winter	12.6
KW Saved Winter	3.7

*OA = Outside Air

***OSHA, NIOSH & WHO most conservative values us
http://www.cdc.gov/niosh/npg/npgsyn-a.html

Indoor Contaminants Generated By People & From Outdoors	Maximum Threshold Value (PPM)	Steady State (lb/ft3) Using the VRP* (Prescribed OA) Plasma Off	Steady State (lb/ft3) Using the IAQ Method (Reduced OA) Plasma On	Is Steady State Level Acceptable at Reduced OA Levels?	Contaminant Generation Rate (lb/person/min)	Filtration Effectiveness	Cognizant Authority***
Acetaldehyde	100.0	2.57E-09	2.32E-09	Yes	1.95E-08	50%	OSHA
Acetone	250.0	1.35E-08	2.00E-08	Yes	1.96E-07	50%	NIOSH
Ammonia	25.00	3.13E-07	4.68E-07	Yes	4.61E-06	50%	NIOSH
Benzene	1.00	1.55E-08	2.25E-08	Yes	2.21E-07	50%	OSHA
2- Butanone (MEK)	200.0	9.06E-07	1.36E-06	Yes	1.33E-05	50%	NIOSH
Carbon dioxide**	5000	4.75E-05	5.19E-05	Yes	3.73E-05	0%	NIOSH
Chloroform	2.0	2.81E-08	4.20E-08	Yes	4.13E-07	50%	NIOSH
Dioxane	100.0	0.00E+00	0.00E+00	Yes	0.00E+00	50%	OSHA
Hydrogen Sulfide	10.0	0.00E+00	0.00E+00	Yes	0.00E+00	50%	NIOSH
Methane	NA	6.87E-08	6.87E-08	Yes	0.00E+00	0%	NA
Methanol	200.0	1.14E-08	3.16E-08	Yes	1.69E-07	0%	NIOSH
Methylene Chloride	25.0	8.23E-07	1.23E-06	Yes	1.21E-05	50%	OSHA
Propane	1000.0	1.12E-09	1.12E-09	Yes	0.00E+00	0%	NIOSH
Tetrachloroethane	5.0	0.00E+00	0.00E+00	Yes	0.00E+00	50%	OSHA
Tetrachloroethylene	100.0	9.34E-07	1.40E-06	Yes	1.38E-05	50%	OSHA
Toluene	100.0	3.59E-09	3.84E-09	Yes	3.44E-08	50%	NIOSH
1,1,1 - Trichloroethane	350.0	3.93E-05	5.88E-05	Yes	5.79E-04	50%	NIOSH
Xylene	100.0	6.25E-10	1.69E-10	Yes	0.00E+00	50%	OSHA

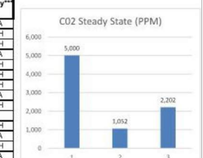

1 = NIOSH C02 Limit
2 = C02 Level at Ventilation Rate OA Flow Rate
3 = C02 Level at IAQ Procedure OA Flow Rate

**Carbon dioxide has been provided for reference only for gathering demand control ventilation (DCV) setpoints. The National Research Council was commissioned by the US Navy to prove C02 is not a contaminant of concern when using air purification to control the other contaminants of concern, as found on submarines.

Building materials and furnishings assumed to have no VOCs and off-gassing is complete
All yellow shaded boxes require user input or review

Is IAQ acceptable at reduced outside air levels? Yes

NOTE: OCCUPANCY BASED OFF MAX LISTED IN IMC 403.3.1.1

LATHAN ARCHITECTS

Pinnacle ENGINEERING, INC.
Engineering & Design Consultants
2111 Parkway Office Circle, Suite 125
Birmingham, AL 35244
(205) 733-6912 FAX: (205) 733-6913
Job No.: 23198 File: 23198D01

CLASSROOM ADDITION FOR
MARGARET ELEMENTARY SCHOOL
680 COUNTY ROAD 12, ODENVILLE, ALABAMA 35120
ST. CLAIR COUNTY BOARD OF EDUCATION

ALABAMA REGISTERED No. 24075 PROFESSIONAL ENGINEER JAMES M. HOLT
1/11/24

SHEET TITLE:
VENTILATION CALCULATIONS

PROJ. MGR.: JMH
DRAWN: CRA/JSH
DATE: JANUARY 11, 2024
REVISIONS

JOB NO. 23-41
SHEET NO:
M3.1
5 OF 5

0 1" 2"

LIGHTING FIXTURE SCHEDULE

MARK	MANUFACTURER	CATALOG NO.	LAMPS			MOUNTING HEIGHT	TYPE MOUNTING	RECESS DEPTH	REMARKS
			NO.	WATTS	TYPE				
A	METALUX	24CGT5535C	FURNISHED WITH FIXTURE			CEILING	RECESSED	2-1/8"	
A1 (EM)	METALUX	24CGT5535C EBPLED7W3H	FURNISHED WITH FIXTURE			CEILING	RECESSED	2-1/8"	SEE NOTES 1 & 4
B	METALUX	24CGT4535C	FURNISHED WITH FIXTURE			CEILING	RECESSED	2-1/8"	
B (EM)	METALUX	24CGT4535C-EL14W	FURNISHED WITH FIXTURE			CEILING	RECESSED	2-1/8"	SEE NOTE 1
B1 (EM)	METALUX	24CGT4535C EBPLED7W3H	FURNISHED WITH FIXTURE			CEILING	RECESSED	2-1/8"	SEE NOTES 1 & 4
C	METALUX	22CGT4535C	FURNISHED WITH FIXTURE			CEILING	RECESSED	2-1/8"	
D (EM)	PATHWAY LIGHTING	6VLFL2X-3000-35K-DA-6VLEDMD-SCLPF-EL14W	FURNISHED WITH FIXTURE			CEILING	RECESSED		SEE NOTE 1
F	MCGRAW-EDISON	ISW-E02-LED-E1-BL4-BZ-TR	FURNISHED WITH FIXTURE			+9'	BRACKET		
F (EM)	MCGRAW-EDISON	ISW-E02-LED-E1-BL4-BZ-TR-BBB	FURNISHED WITH FIXTURE			+9'	BRACKET		SEE NOTE 1
X	SURE-LITES	EUX7-R-UNV	FURNISHED WITH FIXTURE			℄ ABOVE DOOR	BRACKET		

NOTES:
1. FEED ALL "EM" FIXTURES WITH SWITCHED AND UNSWITCHED HOT LEGS. UNSWITCHED HOT LEG IS USED FOR VOLTAGE SENSING.
2. VERIFY ALL FIXTURE COLORS WITH ARCHITECT PRIOR TO SUBMITTALS.
3. EQUAL FIXTURES BY LITHONIA, LUMAX, DAYBRITE, AND COLUMBIA WILL BE CONSIDERED APPROVED EQUALS.
4. FIXTURE TYPES A1(EM) & B1(EM) ARE EMERGENCY LIGHTS WITH LONG RUN BATTERY PACKS. THESE LIGHTS ARE SPECIFIED WITH SURE-LITES LED BATTERY PACKS THAT ARE 7 WATTS AND RATED TO RUN FOR 3 HOURS.

GENERAL NOTES

1. SERVICE TO BUILDING IS 277/480 VOLTS, 3 PHASE, 4 WIRE.
2. VERIFY ALL DOOR SWINGS WITH ARCHITECTURAL DRAWINGS BEFORE ROUGHING IN SWITCHES.
3. VERIFY EXACT LOCATION OF ALL MOTORS AND EQUIPMENT BEFORE ROUGHING IN.
4. CONTRACTOR TO VERIFY LOCATION OF ALL OUTLETS PRIOR TO INSTALLATION.
5. THE ELECTRICAL CONTRACTOR SHALL VERIFY THE EXACT LOCATION OF COUNTERTOPS AND BACKSPLASHES ON ARCHITECTURAL DETAILS AND/OR CASEWORK SHOP DRAWINGS AND ADJUST SPECIFIED MOUNTING HEIGHT OF WALL OUTLETS AS REQUIRED TO AVOID CONFLICTS.
6. CONTRACTOR WILL CHECK ALL LIGHTING FIXTURES FOR EXACT TYPE MOUNTING AND SPACE REQUIRED BEFORE ROUGHING IN.
7. FURNISH AND INSTALL PLASTER FRAMES FOR ALL RECESSED FIXTURES AS REQUIRED.
8. SUPPORT OF ALL LIGHTING FIXTURES TO BE THE RESPONSIBILITY OF THIS CONTRACTOR. FIXTURES TO BE SUPPORTED INDEPENDENT OF CEILING FROM STRUCTURAL MEMBERS OF THE BUILDING.
9. ELECTRICAL CONTRACTOR MUST CHECK THE CORRESPONDING MECHANICAL SHEETS AND BE RESPONSIBLE FOR INCLUDING PROPER SERVICE AND CONNECTIONS TO ALL MECHANICAL ITEMS SHOWN THEREON REGARDLESS OF ITS BEING OR NOT BEING SHOWN ON ELECTRICAL SHEETS.
10. ALL CONDUIT CONCEALED UNLESS SPECIFICALLY SHOWN EXPOSED. METAL WIRE MOLD IS PERMITTED WHERE SURFACE MOUNT CONDUIT IS REQUIRED. NO EXPOSED EMT CONDUIT IN OPEN WORK AREA ROOM 101.
11. COORDINATE SERVICES WITH POWER AND COMMUNICATIONS COMPANIES. REMOVE OR RELOCATE ALL POWER AND COMMUNICATIONS CIRCUITS ABOVE OR BELOW GRADE THAT WOULD OBSTRUCT THE CONSTRUCTION OF THE PROJECT OR CONFLICT IN ANY MANNER WITH COMPLETION OF THE PROJECT OR ANY CODE PERTAINING THERETO. IF UTILITY COMPANY REQUIREMENTS ARE AT VARIANCE WITH THESE DRAWINGS AND SPECIFICATIONS, THE CONTRACT PRICE SHALL INCLUDE THE ADDITIONAL COST.
12. IT IS INTENDED THAT SPECIFICATIONS AND PLANS SHALL INCLUDE EVERYTHING REQUIRED AND NECESSARY FOR PROPER AND COMPLETE INSTALLATION OF THE COMPLETE SYSTEMS SHOWN EVEN THOUGH EVERY ITEM MAY NOT BE PARTICULARLY MENTIONED IN DETAIL. THE CONTRACTOR SHALL DELIVER TO OTHER TRADES ANY EQUIPMENT THAT MUST BE INSTALLED DURING CONSTRUCTION. CONTRACTOR SHALL BE RESPONSIBLE FOR FIELD MEASUREMENTS AND COORDINATION OF THE PHYSICAL SIZE OF ALL EQUIPMENT WITH THE ARCHITECTURAL REQUIREMENTS OF THE SPACES INTO WHICH THE EQUIPMENT WILL BE INSTALLED.
13. THIS CONTRACTOR SHALL INSTALL EQUIPMENT GROUNDS THROUGHOUT THIS PROJECT, USING GREEN INSULATED GROUND WIRE. USE OF CONDUIT AS THE ONLY GROUND CONDUCTOR WILL NOT BE ALLOWED. (SIZE GROUND WIRES PER N.E.C.)
14. REMOVE ALL EXISTING PANELBOARDS, DISCONNECTS, FIXTURES, RECEPTACLES, AUXILIARY SYSTEM DEVICES, CONDUIT, CONDUCTORS, ETC. BEING RENDERED OBSOLETE BY THIS PROJECT.
15. WHERE EXISTING REMAINING CIRCUITS ARE BEING INTERRUPTED DUE TO STRUCTURAL AND/OR DESIGN CHANGES, THIS CONTRACTOR WILL EXTEND EXISTING CIRCUITS AS REQUIRED TO MAINTAIN CIRCUIT CONTINUITY TO REMAINING ACTIVE DEVICES.

FIRE ALARM SYSTEM NOTES

1. PROVIDE FIRE ALARM COMPLETION DOCUMENTS AT THE STATE FINAL INSPECTION. THIS ITEM WILL BE REQUIRED BY STATE BUILDING INSPECTOR AT THE TIME OF FINAL INSPECTION (OLD CERTIFICATION FORM).
2. ADDITIONS AND ALTERATIONS TO THE FIRE ALARM SYSTEM REQUIRE TESTING, A RECORD OF COMPLETION, AND RECERTIFICATION. ALL FIRE ALARM WORK SHALL BE PERFORMED BY QUALIFIED PERSONNEL AS DEFINED IN NFPA-72 (2013) 10.4.2, 10.5.2, AND 10.18.1.
3. ALL WORK SHALL BE PERFORMED BY A CERTIFIED FIRE ALARM CONTRACTOR - SEE SPECS.

CODE EXCEPTION NOTE

THIS PROJECT HAS BEEN DESIGNED UNDER ASHRAE 90.1 2013, EXCEPT AS FOLLOWS: WE TAKE EXCEPTION TO SECTION 8.4.2 FOR REQUIRING CONTROLLED RECEPTACLES, AND SECTION 8.4.3 FOR REQUIRING ENERGY MONITORING. WE OFFICIALLY REQUEST THAT THIS PROJECT BE APPROVED WITHOUT THOSE ITEMS.

ELECTRICAL SYMBOLS

(A)1/a	CEILING OUTLET - FIXTURE "A", CIRCUIT 1, SWITCH a.
	CEILING OUTLET - FLUORESCENT FIXTURE.
	CEILING OUTLET - FLUORESCENT INDUSTRIAL OR STRIP TYPE.
	WALL OUTLET - INCANDESCENT BRACKET TYPE.
	WALL OUTLET - FLUORESCENT BRACKET TYPE.
ALL NEW RECEPTACLES SHALL BE TAMPER RESISTANT	WALL OUTLET - DUPLEX OUTLET, 20A, 125V, GROUNDED, PASS & SEYMOUR PT5362A-GRY WITH PT6STR PLUG TAIL CONNECTOR.
	WALL OUTLET - DUPLEX OUTLET, 20A, 125V, GROUNDED, PASS & SEYMOUR PT5362A-GRY WITH PT6STR PLUG TAIL CONNECTOR - MOUNT AT 6" ABOVE COUNTER.
GFCI	WALL OUTLET - SINGLE OUTLET, 30A, 250V, 3W, GFCI HUBBELL RECEPTACLE.
GFCI	WALL OUTLET - DUPLEX OUTLET, 20A, 125V, GROUNDED, PASS & SEYMOUR PT2095-GRY WITH PT6STR PLUG TAIL CONNECTOR.
WP GFCI	WALL OUTLET - DUPLEX OUTLET, 20A, 125V, GROUNDED, WEATHERPROOF, PASS & SEYMOUR PT2095-GRY WITH PT6STR PLUG TAIL CONNECTOR. INSTALL #WIUC10-CAGV WEATHERPROOF COVER. DEVICE SHALL BE LABELED AS "EXTRA DUTY".
•	FLOOR OUTLET - CONDUIT STUB UP.
J	CEILING OUTLET - JUNCTION BOX.
J	WALL OUTLET - JUNCTION BOX WITH FLEXIBLE CONNECTION TO EQUIPMENT.
$	SWITCH OUTLET - AC TYPE, SINGLE POLE, 20A, 120/277V, HUBBELL #1221 - GREY.("N" DENOTES NARROW)
$3	SWITCH OUTLET - AC TYPE, THREE WAY, 20A, 120/277V, HUBBELL #1223 - GREY.
$4	SWITCH OUTLET - AC TYPE, FOUR WAY, 20A, 120/277V, HUBBELL #1224 - GREY.
$M	SWITCH MANUAL MOTOR STARTER, SINGLE POLE WITH OVERLOAD PROTECTION.
	LIGHTING PANEL - SEE SPECIFICATIONS AND SCHEDULE.
	POWER PANELS - SEE SPECIFICATIONS AND SCHEDULE.
	BRANCH CIRCUIT CONCEALED IN WALL OR CEILING.
	BRANCH CIRCUIT CONCEALED IN FLOOR OR GROUND.
	HOMERUN TO PANELBOARD - ANY CIRCUIT WITHOUT FURTHER DESIGNATION 2 # 12 & 1 # 12(G) - 1/2" CONDUIT. 3 # 12 & 1 # 12(G) - 3/4" CONDUIT. 4 # 12 & 1 # 12(G) - 3/4" CONDUIT.
E	EMPTY CONDUIT - 3/4".
	BRANCH CIRCUIT EXPOSED.
◦	CONDUIT RUN DOWN WALLS, CONCEALED
•	CONDUIT RUN UP WALLS, CONCEALED
(S)	MOTOR SHOWN 5hp (TYPICAL) OR (Y) 40 AMPS (TYPICAL).
(F)	EXHAUST FAN MOTOR - FRACTIONAL HORSEPOWER.
	MAGNETIC MOTOR STARTER.
	NON-FUSED DISCONNECT SWITCH. (RT - RAINTIGHT).
	FUSED DISCONNECT SWITCH.
A.F.F.	ABOVE FINISHED FLOOR.
VER.	VERIFY LOCATION.
N.E.C.	NATIONAL ELECTRICAL CODE.
GFCI	GROUND FAULT CIRCUIT INTERRUPTER
WP	WEATHER PROOF
IG	ISOLATED GROUND
	FIRE ALARM - SMOKE DETECTOR - SEE SPEC.
F	FIRE ALARM - MANUAL PULL STATION - SEE SPEC.
F	FIRE ALARM - STROBE LIGHT - SEE SPEC.
S	FIRE ALARM - SPEAKER STROBE - SEE SPEC.
FACP	FIRE ALARM CONTROL PANEL - EXISTING - SEE SPEC.
S.S.C.	MASTER SOUND CONSOLE - EXISTING TO BE REPLACED - SEE SPEC.
(S)	SOUND SYSTEM - CEILING MOUNTED SPEAKER - SEE SPEC.
	SOUND SYSTEM - CALL-IN SWITCH - SEE SPEC.
(M)	CEILING MOUNTED MOTION DETECTOR - COOPER #OMC-P-1200-R
M	MOTION SENSOR SWITCHPACK - COOPER #SP20-MV (INSTALLED ABOVE LAY-IN CEILING)
$MS	WALL SWITCH WITH BUILT IN MOTION SENSOR - COOPER #OSW-P-0451-W WITH WALL PLATE
M	MOTION SENSOR WIRING - LOW VOLTAGE WIRING (#14 THHN AS REQUIRED)
	COMPUTER OUTLET - RUN CAT 6 CABLING AS NOTED IN 3/4" CONDUIT (CONDUIT TO ABOVE LAY-IN CEILING UNLESS OTHERWISE NOTED).
	COMPUTER OUTLET - RUN CAT 6 CABLING AS NOTED IN 3/4" CONDUIT (CONDUIT TO ABOVE LAY-IN CEILING UNLESS OTHERWISE NOTED). MOUNT 6" ABOVE COUNTER.
H	CLOCK SYSTEM - DIGITAL CLOCK - AMERICAN #DSY441RSA3 - RED 4 DIGIT 120V (DF - DOUBLE FACE).
	CCTV SYSTEM - FUTURE CAMERA LOCATION - ABOVE CEILING SHALL BE 1 CAT 6 CABLE CONNTECTED TO MDF.
WPO	PROJECTION WALL PLATE - AT TV LOCATION WITH DATA, HDMI, AND USB CABLING AND OUTLETS - SEE DETAIL - SHEET E5.1.
WPI	PROJECTION WALL PLATE - AT TEACHER LOCATION WITH DATA, HDMI, AND USB CABLING AND OUTLETS - SEE DETAIL - SHEET E5.1.

COLOR CODE FOR ELECTRICAL WIRING

1. 120/208 V, 60Hz, 3 PHASE, 4 WIRE SYSTEM
   PHASE A-BLACK
   B-RED
   C-BLUE
   N-WHITE
2. 277/480 V, 60Hz, 3 PHASE, 4 WIRE SYSTEM
   PHASE A-BROWN
   B-ORANGE
   C-YELLOW
   N-GRAY
3. GROUND-GREEN

COLOR CODE FOR JUNCTION BOXES

NOTE:
PAINT ALL JUNCTION BOXES AND COVERS WITH COLORS AS SHOWN BELOW. PAINTING COVERS ONLY IS NOT ACCEPTABLE.

FUNCTION:	COLOR:
LIGHTING	BLUE
POWER	GREEN
FIRE ALARM	RED

STEWART ENGINEERING
ELECTRICAL CONSULTANTS

P.O. Box 2233 (36202)
300 East 7th Street (36207)
Anniston, Alabama
Phone: 256/237-0891
Fax No.: 256/237-1077
Email: services@stewartengineering.org

Engineer:
J. Lance Junkin, P.E.
Alabama Reg. 14817

Project Number:
23104

LATHAN ARCHITECTS

CLASSROOM ADDITION FOR
MARGARET ELEMENTARY SCHOOL
680 COUNTY ROAD 12, ODENVILLE, ALABAMA 35120
ST. CLAIR COUNTY BOARD OF EDUCATION

ALABAMA LICENSED PROFESSIONAL ENGINEER 14817 JEFFREY LANCE JUNKIN 1-11-24

SHEET TITLE:
SCHEDULES, SYMBOLS, AND NOTES

PROJ. MGR.: LANCE JUNKIN
DRAWN: SEC
DATE: JANUARY 11, 2024
REVISIONS

JOB NO. 23-41
SHEET NO:
E1.1
1 OF 5

0 1" 2"

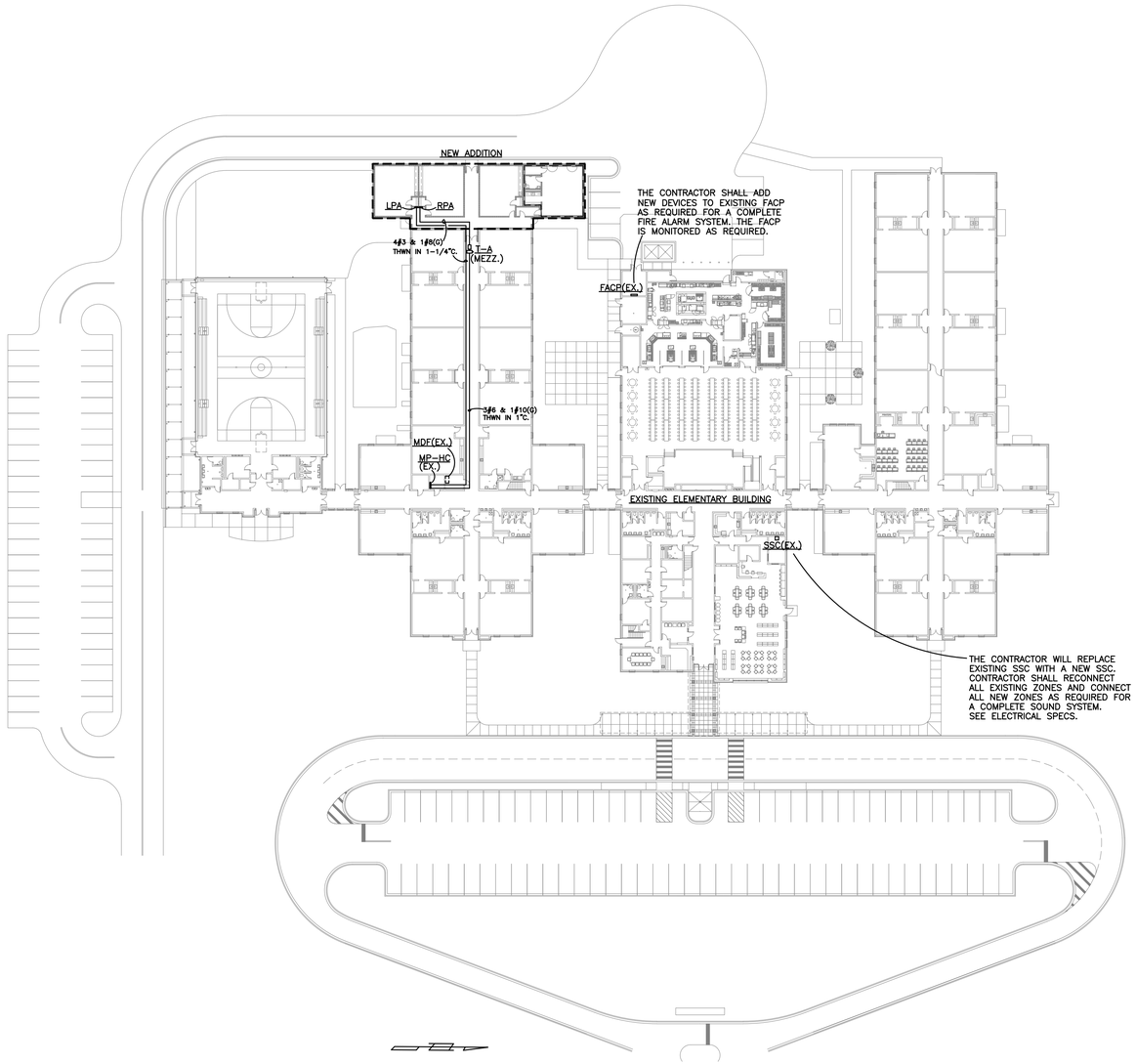

MASTER PLAN

SCALE: 1" = 40'

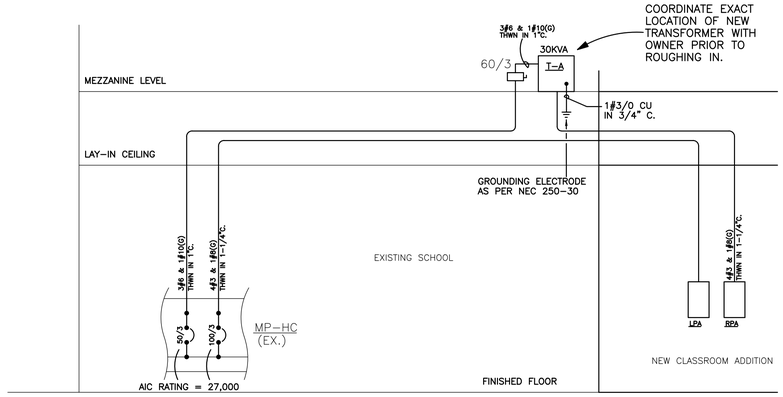

ELECTRICAL SINGLE LINE DIAGRAM

N.T.S.

TRANSFORMER SCHEDULE

MARK	SIZE	PRIMARY	SECONDARY	MANUFACTURER	CATALOG NUMBER	REMARKS
T-A	30 KVA	480V 3ø DELTA	120/208V 3ø, 4W, WYE	SQUARE D	30T3H	SEE NOTE 1

NOTES:
1. BOND TRANSFORMER LOWSIDE NEUTRAL TO THE TRANSFORMER CASE, TO THE "INCOMING" AND "OUTGOING" GROUND WIRES, AND TO GROUNDING ELECTRODE (AS PER NEC 250-30) AT EACH TRANSFORMER, USING #3/0 CU.

PANELBOARD SCHEDULE

MARK	TYPE	MAINS			BRANCHES					LUG LOCATION	TYPE MOUNTING	AREA PANEL LOCATED	AVAILABLE FAULT CURRENT	REMARKS
		TYPE	AMPS	SERVICE	1 POLE	2 POLE	3 POLE	SPARES	SPACES					
LPA	NF	LUGS	100	277/480V 3ø, 4W	4-20		4-20 4-25	2-20/3	8-1PS	TOP	RECESSED	CORR. 106	10,000	SEE NOTES 1, 2, 3, & 4
RPA	NQOD	M/B	100	120/208V 3ø, 4W	13-20	2-30		6-20/1	7-1PS	TOP	RECESSED	CORR. 106	10,000	SEE NOTES 1, 2, 3, & 4

NOTES:
1. ALL PANELBOARDS SHALL BE CAPABLE OF WITHSTANDING AND INTERRUPTING THE AVAILABLE FAULT CURRENTS AS LISTED ABOVE.
2. ALL PANELBOARDS SHALL HAVE MICARTA LABELS SHOWING SWITCHBOARD/PANELBOARD DESIGNATION, AND OPERATING VOLTAGE.
3. NO SERIES RATING WILL BE ALLOWED ON ANY PANELBOARDS.
4. ON ALL RECESSED PANELBOARDS, CONTRACTOR SHALL SUPPLY AND INSTALL (5) EMPTY 3/4" CONDUITS STUBBED TO ABOVE LAY-IN CEILING.

PANELBOARD NOTES:
1. MANUFACTURER OF SWITCHBOARDS AND/OR PANELBOARDS SHALL PERFORM FAULT CURRENT CALCULATIONS, COORDINATION STUDY, AND ARC FLASH HAZARD ANALYSIS, AND LABEL ALL SWITCHBOARDS AND/OR PANELBOARDS, IN ACCORDANCE WITH NFPA 70E-2009 (ARTICLE 130) AND NFPA 70-2008 (ARTICLE 110.16).
2. CONTRACTOR SHALL FIELD MARK ELECTRICAL SERVICE EQUIPMENT WITH A CONSPICUOUS AND PERMANENT LABEL THAT INDICATES THE AVAILABLE FAULT CURRENT PER NEC 110.24.
3. CONTRACTOR SHALL FIELD MARK ELECTRICAL PANELS WITH A CONSPICUOUS AND PERMANENT LABEL THAT INDICATES WHERE PANELS ARE FED FROM PER NEC 408.4(B).

STEWART ENGINEERING
ELECTRICAL CONSULTANTS

P.O. Box 2233 (36202)
300 East 7th Street (36207)
Anniston, Alabama
Phone: 256/237-0891
Fax No.: 256/237-1077
Email: services@stewartengineering.org

Engineer:
J. Lance Junkin, P.E.
Alabama Reg. 14817

Project Number:
23104

LATHAN ARCHITECTS

CLASSROOM ADDITION FOR
MARGARET ELEMENTARY SCHOOL
680 COUNTY ROAD 12, ODENVILLE, ALABAMA 35120
ST. CLAIR COUNTY BOARD OF EDUCATION

ALABAMA LICENSED No. 14817 PROFESSIONAL ENGINEER J. LANCE JUNKIN
1-11-24

SHEET TITLE:
MASTER PLAN AND SINGLE LINE DIAGRAM

PROJ. MGR.: LANCE JUNKIN
DRAWN: SEC
DATE: JANUARY 11, 2024
REVISIONS

JOB NO. 23-41
SHEET NO:
E2.1
2 OF 5

0 1" 2"

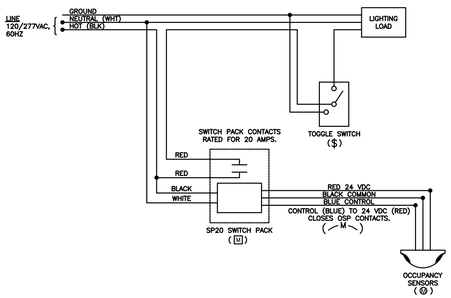

OCCUPANCY SENSOR - 1 WAY

WIRING DIAGRAM – SINGLE POWER PACK APPLICATION

NOT TO SCALE

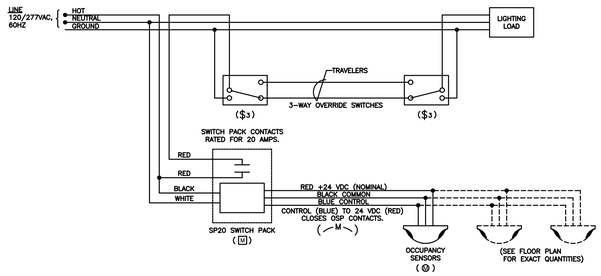

OCCUPANCY SENSOR - 3 WAY

USING POWER PACK SENSORS IN A 3-WAY SWITCHED CIRCUIT

NOT TO SCALE

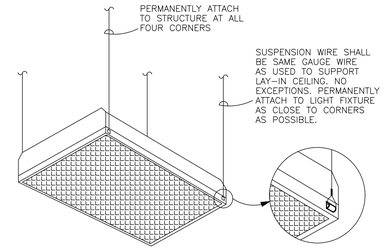

DETAIL - LIGHT FIXTURE SUPPORT

N.T.S.

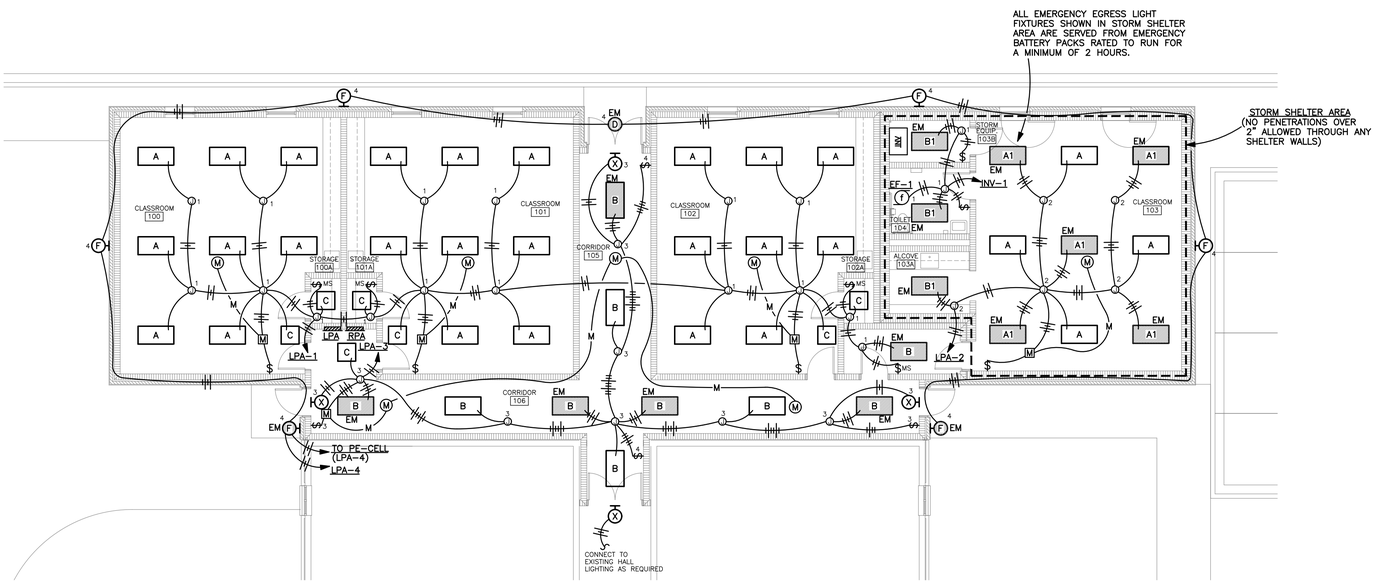

EXISTING EXIT AND EMERGENCY EGRESS LIGHTING HAS BEEN VERIFIED IN ALL EXISTING AREAS THAT THE NEW CLASSROOM WING CONNECTS TO.

FLOOR PLAN - LIGHTING

SCALE: 1/8" = 1'-0"

NOTES:
1. ALL WIRING SHOWN FEEDING EXTERIOR FIXTURES SHALL BE #10 THHN.

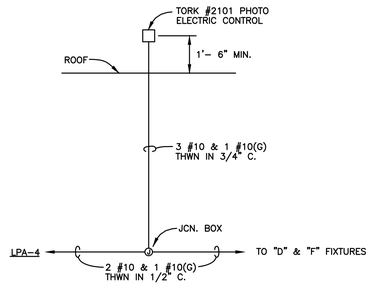

DETAIL - P.E. CELL

N.T.S.

STEWART ENGINEERING
ELECTRICAL CONSULTANTS

P.O. Box 2233 (36202)
300 East 7th Street (36207)
Anniston, Alabama
Phone: 256/237-0891
Fax No.: 256/237-1077
Email: services@stewartengineering.org

Engineer:
J. Lance Junkin, P.E.
Alabama Reg. 14817

Project Number:
23104

LATHAN ARCHITECTS

CLASSROOM ADDITION FOR
MARGARET ELEMENTARY SCHOOL
680 COUNTY ROAD 12, ODENVILLE, ALABAMA 35120
ST. CLAIR COUNTY BOARD OF EDUCATION

ALABAMA LICENSED PROFESSIONAL ENGINEER LANCE JUNKIN 14817 1-11-24

SHEET TITLE:
FLOOR PLAN – LIGHTING

PROJ. MGR.:	LANCE JUNKIN
DRAWN:	SEC
DATE:	JANUARY 11, 2024
REVISIONS	

JOB NO. 23-41

SHEET NO:
E3.1
3 OF 5

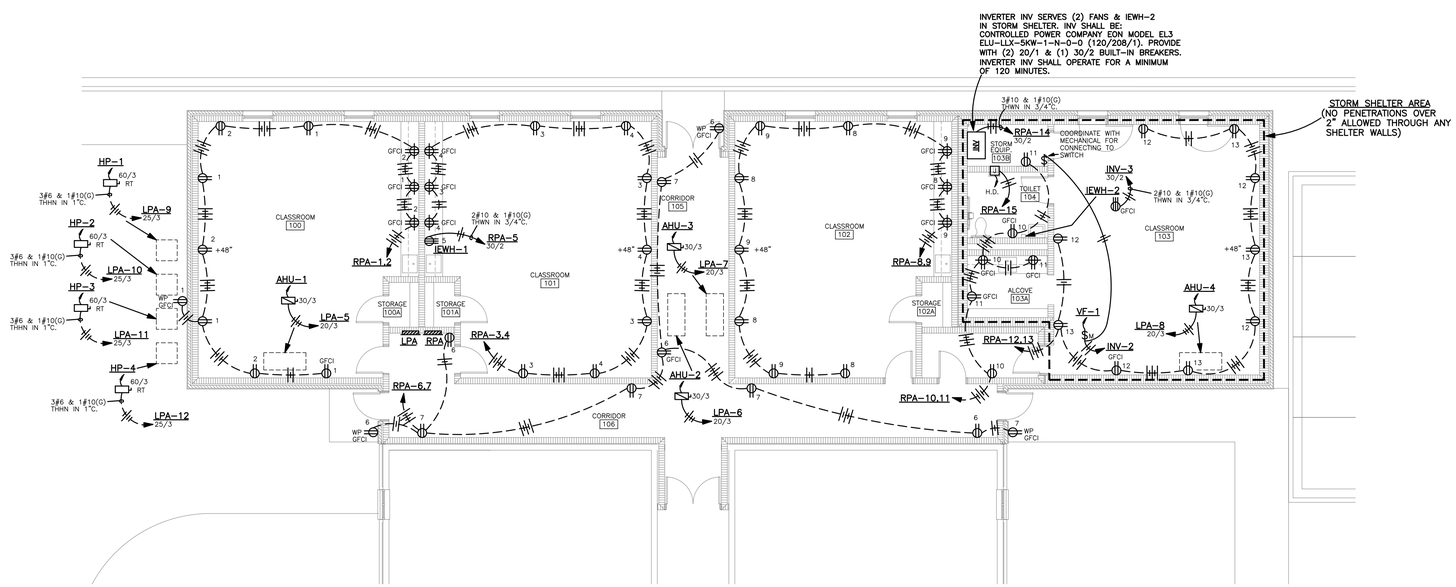

FLOOR PLAN - POWER

SCALE: 1/8" = 1'-0"

NOTES:

1. COORDINATE ALL OUTLETS AT COUNTER AREAS CLOSELY WITH ARCHITECTURAL CASEWORK DRAWINGS. PLACE OUTLETS BELOW COUNTERS, AT STANDARD MOUNTING HEIGHT, WHEN KNEE SPACE PERMITS ACCESS (COORDINATE INSTALLATION OF HOLES WITH RUBBER GROMMETS IN THOSE CASES).
2. COORDINATE INSTALLATION OF OUTLETS CLOSELY WITH FURNITURE SUPPLIER.
3. ALL BRANCH CIRCUIT HOME RUNS THAT EXCEED 100' IN LENGTH SHALL BE #10 THHN.

STEWART ENGINEERING
ELECTRICAL CONSULTANTS

P.O. Box 2233 (36202)
300 East 7th Street (36207)
Anniston, Alabama
Phone: 256/237-0891
Fax No.: 256/237-1077
Email: services@stewartengineering.org

Engineer:
J. Lance Junkin, P.E.
Alabama Reg. 14817

Project Number:
23104

LATHAN ARCHITECTS

CLASSROOM ADDITION FOR
MARGARET ELEMENTARY SCHOOL
680 COUNTY ROAD 12, ODENVILLE, ALABAMA 35120
ST. CLAIR COUNTY BOARD OF EDUCATION

ALABAMA LICENSED 14817 PROFESSIONAL ENGINEER LANCE JUNKIN 1-11-24

SHEET TITLE:
FLOOR PLAN – POWER

PROJ. MGR.:	LANCE JUNKIN
DRAWN:	SEC
DATE:	JANUARY 11, 2024
REVISIONS	

JOB NO. 23-41

SHEET NO:
E4.1
4 OF 5

0 1" 2"

AUXILIARY CIRCUIT LEGEND

SS1 (S)	SPEAKER – FED FROM COMMON ZONE SS1
2A	DATA OUTLET 2A (1 CAT. 6 CABLE PULLED TO JUNCTION BOX AND TERMINATED, LEAVE 12" SLACK ON EACH CABLE)
SSA4 (S)	SPEAKER – FED FROM INDIVIDUAL ZONE SSA4

OUTLET NUMBER:	ROOM NUMBER:
2A	103
IDF NUMBER:	PATCH PANEL/PORT #:
MDF	1 / 1

DETAIL - DATA CABLE LABEL

N.T.S.

NOTES:
1. LABEL ALL CABLES EVERY 50' AND AT EACH END.
2. EXACT LABEL METHOD SHALL BE COORDINATED WITH, AND APPROVED BY, ENGINEER PRIOR TO PURCHASE AND INSTALLATION.
3. IF ONLY ONE (1) OUTLET IN A ROOM, LABEL OUTLET AS 1A.
4. ROOM NUMBERS ON LABELS SHALL CORRESPOND TO FINAL ROOM NUMBERS IN FIELD (NOT NECESSARILY SAME AS ON CONSTRUCTION DRAWINGS).

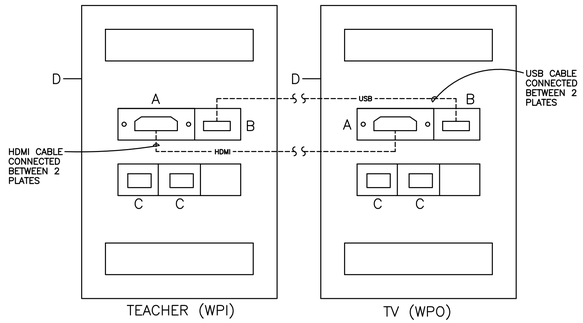

A HDMI CONNECTION
B USB CONNECTION
C DATA CAT 6 CONNECTION
D S.S. PLATE

DETAIL - PROJECTION PLATES

N.T.S.

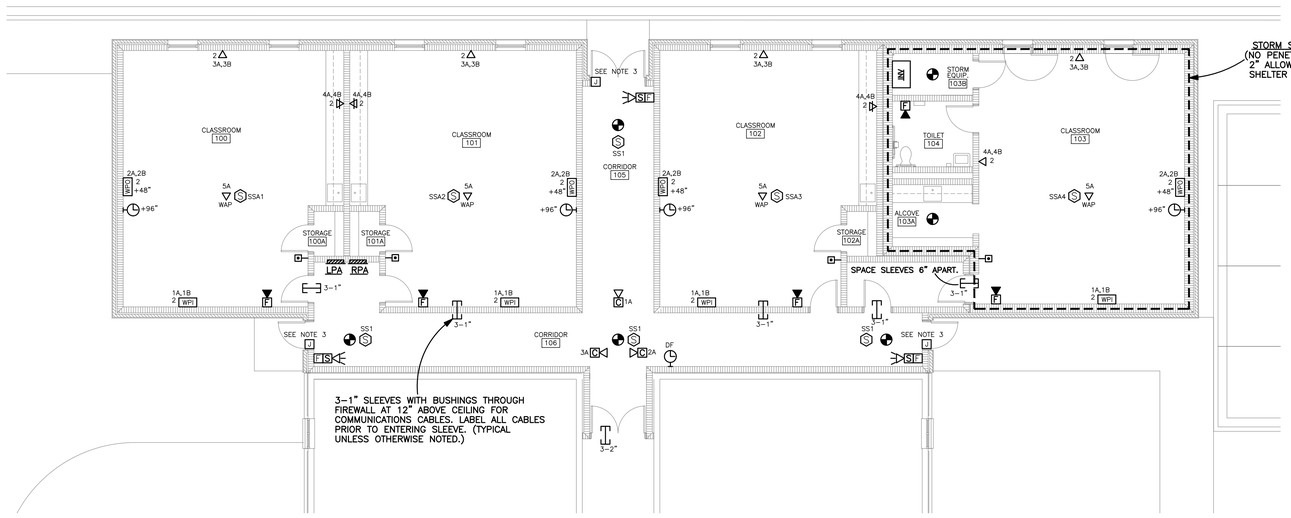

FLOOR PLAN - AUXILIARIES

SCALE: 1/8" = 1'-0"

NOTES:
1. ALL COMPUTER OUTLETS SHOWN ON THIS PLAN ARE SERVED FROM MDF(EX.).
2. COORDINATE FINAL LOCATIONS OF ALL CEILING SPEAKERS, SMOKE DETECTORS, ETC. TO AVOID CONFLICT WITH LIGHT FIXTURES AND MECHANICAL DIFFUSERS. PLACE THESE DEVICES AS CLOSE AS POSSIBLE TO LOCATION SHOWN ON THESE DRAWINGS. COORDINATE WITH FIRE ALARM SYSTEM MANUFACTURER WITH REGARD TO APPROPRIATE "MINIMUM" DISTANCE FROM DIFFUSERS.
3. AT THESE DOOR LOCATIONS, CONTRACTOR SHALL INSTALL EMPTY JUNCTION BOX WITH 3/4" EMPTY CONDUIT WITH PULL STRING TO ABOVE LAY-IN CEILING FOR FUTURE CARD ACCESS SYSTEM. COORDINATE CLOSELY WITH ARCHITECT FOR DOOR HARDWARE CONFIGURATION.

STEWART ENGINEERING
ELECTRICAL CONSULTANTS

P.O. Box 2233 (36202)
300 East 7th Street (36207)
Anniston, Alabama
Phone: 256/237-0891
Fax No.: 256/237-1077
Email: services@stewartengineering.org

Engineer:
J. Lance Junkin, P.E.
Alabama Reg. 14817

Project Number:
23104

LATHAN ARCHITECTS

CLASSROOM ADDITION FOR
MARGARET ELEMENTARY SCHOOL
680 COUNTY ROAD 12, ODENVILLE, ALABAMA 35120
ST. CLAIR COUNTY BOARD OF EDUCATION

ALABAMA LICENSED No. 14817 PROFESSIONAL ENGINEER J. LANCE JUNKIN 1-11-24

SHEET TITLE:
FLOOR PLAN – AUXILIARIES

PROJ. MGR.:	LANCE JUNKIN
DRAWN:	SEC
DATE:	JANUARY 11, 2024
REVISIONS	

JOB NO. 23-41

SHEET NO:
E5.1
5 OF 5

0 1" 2"