TITLE COMMITMENT INFORMATION

This ALTA/NSPS Land Title Survey is based upon the title commitment issued by First American Title Insurance Company, Commitment No. NCS-1060803-MAD, with an effective date of March 26, 2021. and a Property Information Report, File Number NCS-1060803A-MAD dated through June 29, 2022.

LEGAL DESCRIPTION

The Land referred to herein below is situated in the County of Bay, State of Florida, and is described as follows:

Lots 86 and 91, Section 21, Township 3 South, Range 14 West, according to Subdivision of said Section 21 by St. Andrew Bay Development Company, as shown by Plat on File in the Public Records of Bay County, Florida.

Less and Except any Portion thereof, Conveyed to Board of County Commissioners of Bay County, Florida, by virtue of that certain quit Claim Deed, filed February 02, 1976, Recorded in Official Records Book 554, Page 155, and Official Records Book 554, Page 159, of the Public Records of Bay County, Florida.

Less and Except any Portion thereof, Conveyed to Sanbro, Inc., a Florida Corporation, by Virtue of that certain Warranty Deed, filed September, 27, 1984, Recorded in Official Records Book 994, Page 418, of the Public Records of Bay County, Florida.

The lands surveyed, shown and described hereon are the same lands as described in the Title Commitment provided by First American Title Insurance Company, Commitment No. NCS-1060803-MAD, dated March 26, 2021.

SCHEDULE B-II ITEMS - EXCEPTIONS

10. Matters shown on the Plat of The St. Andrews Bay Development Company's Subdivision of Section 21, recorded in Plat Book 6, Page 13.
    (Matters of the plat are located on or over the subject property. Nothing to plot.)
11. The terms, provisions, and conditions contained in that certain Final Judgment in favor of Gulf Power Company, a corporation, recorded in Official Records Book 141, Page 622; as affected by Judgment Satisfaction and Cancellation recorded in Official Records Book 141, Page 629.
    (Judgment contains an easement that is located on or over the subject property as shown hereon.)
12. Easement granted to Gulf Power Company by instrument recorded in Official Records Book 499, Page 564, 565 and 566.
    (Power Lines shown hereon are covered by a blanket easement.)

SURVEYOR NOTES

1. BASIS OF BEARING : Bearings shown hereon are based on the Southerly right-of-way line of East 34th Street, as being South 88°36'34" East. Bearings and distances shown hereon are the same record as measured unless otherwise noted.
2. This property has direct physical access to East 34th Street, which is a dedicated public road or highway, with no gaps, gores or overlaps.
3. Monuments have been recovered or placed at all corners of the property as shown hereon. {Table A Item #1}
4. Buildings located on this property are as shown. The address of this property was physically observed and noted as being 228 34th Street. {Table A Item #2}
5. The gross land area of this property is 320,885 square feet or 7.367 acres. {Table A Item #4}
6. The buildings shown on this survey reflect the exterior dimensions along with the square footage of each building as located at ground level. Measured heights of all buildings are noted to the highest point of the building above ground level. {Table A Item #7a, 7b1, & 7c}
7. All substantial features and improvements located and observed on site and within five feet of the property boundaries are shown. {Table A Item #8}
8. Adjacent owner information was taken from the latest tax assessors property owners map when this land title survey was prepared. {Table A Item #13}
9. Evidence of underground utilities existing on or serving the surveyed property are shown according to a private utility locate request. The lines are from physical markings made by the client's contractor and are considered to be reliable in location. {Table A Item #11b}
10. At the time of this survey, the building was not under construction including additions. No evidence of earth moving or other construction was observed. {Table A Item #16}
11. There are no proposed changes in street right-of-way lines according to the City of Panama, Bay County, and the Florida Department of Transportation. There is no observable evidence of recent street or sidewalk construction or repairs. {Table A Item #17}
12. There is no observable evidence of cemeteries, gravesites, and burial grounds at the time of this survey. No cemeteries, gravesites, and burial grounds were disclosed in the record documents provided to the surveyor.
13. No visible evidence of existing tanks or drainage fields were observed.
14. The boundary of the survey property as described forms a mathematically closed figure.
15. The positions and elevations of all data shown on this survey are referenced horizontally to the Florida State Plane Coordinate System, North Zone - NAD 83(2011) and vertically to the North American Vertical Datum of 1988 (NAVD 88) as acquired from Florida Department of Transportation's real time network.

SIGNIFICANT OBSERVATIONS

The surveyor did not observe any encroachments over or upon the subject property.

ZONING INFORMATION

The Zoning information listed below was obtained from a Zoning Report prepared by Solutech, Inc., dated on April 29, 2021 with Project Number 57137.02. {Table A Item #6a & #6b}

Zoning Designation	General Commercial (C3)
Land Use Type	IC Contractors
Site Coverage	
Lot Size	None
Frontage	100 feet
Building Coverage	Maximum ISR = 0.75 Maximum FAR = 2
Building height	230 feet
Set-Backs	
Building (Front)	25 feet
Building (Rear)	25 feet Landscape Buffer
Building (Side)	25 feet Landscape Buffer 5 feet
Storage Yard (Front)	25 feet
Storage Yard (Rear)	25 feet Landscape Buffer
Storage Yard (Side)	25 feet Landscape Buffer 5 feet

Jurisdiction: City of Panama, Florida
Name: L&W Supply
Phone: (561)688-2904
Fax: (561)688-2908

PARKING INFORMATION

Offstreet parking requirements have not been provided per zoning. {Table A Items #6a, #6b & #9}

Parking Space Formula	0.5 spaces per 1,000 SFUR
Loading	None
Parking Spaces Required	10 spaces

On Site Parking Observed

Regular Parking	0 spaces
Handicap Parking	0 spaces
Total Parking	0 spaces

FLOOD ZONE INFORMATION

By graphic plotting only, the subject property is located within Zone "X" and Zone "A" as shown on Flood Insurance Rate Map, Community No. 120012 0335H, Map Number 12005C0335H which bears an effective date of June 2, 2009 and is partially located in a special flood hazard area. As shown on the FEMA website (https://www.fema.gov/cis/FL.html) we have learned this community does currently participate in the program. Zone "X" denotes areas outside of the 500-year floodplain determined to be outside 1% and 0.2% annual chance floodplains. Zone "A" denotes an areas subject to a 1% annual chance of flooding in any given year. Because detailed hydraulic analyses have not been performed on these areas, no base flood elevations are shown. No field surveying was performed to determine this zone. A flood elevation certificate may be needed to verify this determination or apply for a variance from the Federal Emergency Management Agency. {Table A Item #3}

COPYRIGHT - 2022

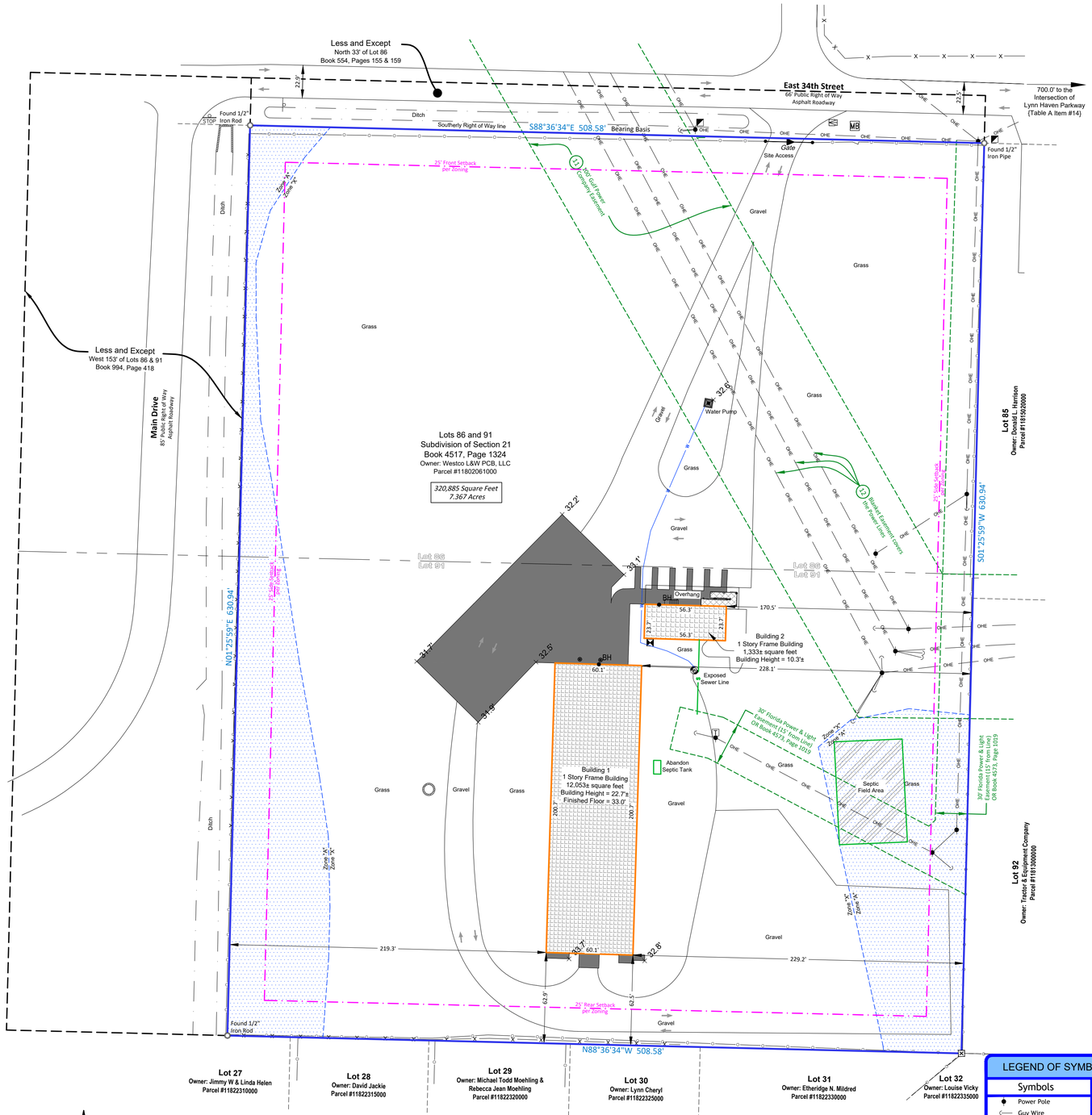

LEGEND OF SYMBOLS & ABBREVIATIONS

Symbols

- Power Pole
- Guy Wire
- Water Valve
- Water Shutoff
- Telephone Pedestal
- Electric Meter
- Electric Transformer
- Mail Box
- Speaker Box
- Double Gate
- Single Gate
- Slide Gate
- Sign
- Stop Sign
- BH Spot Elevation
- x 00.0

Hatching & Line Type

- Building
- Concrete
- Areas in Flood Zone A
- Ramp
- Property Line
- Easement Line
- Building Line
- Wall
- Overhead Utilities
- Chainlink Fence
- Wood Fence

Monumentation

- Found 1/2" Iron Rod No Cap
- Right of Way Monument

ALTA Notations

- (x) Schedule 'B' Item Number

VICINITY MAP

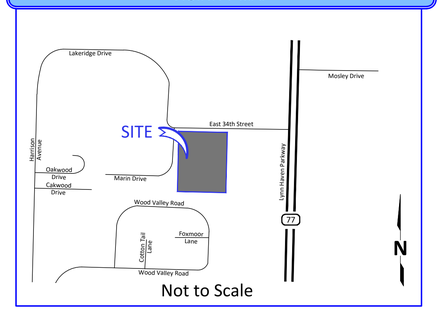

ALTA/NSPS LAND TITLE SURVEY

PERFORMED BY:

SOUTHERN GEOMATICS SERVICES

1925 South Atlantic Avenue, Suite 803
Daytona Beach Shores, Florida 32118

985.801.9990
akesler@southerngeomatics.com

PROJECT INFORMATION

L&W Supply
228 East 34th Street
Panama City, Bay County, Florida

SECTION	*TOWNSHIP*	*RANGE*
21	*3 South*	*14 West*

SURVEY INFORMATION

Date of Field Survey: July 21, 2022
Date of Last Revision: September 13, 2022

PROJECT NUMBER	*PARTY CHIEF*	*DRAWN BY*	*CALCS BY*	*APPROVED*
SGS PROJECT #22-234	*JBM*	*ISP*	*AJK*	*AJK*

Date	Description	Date	Description
08/04/2022	First Draft		
09/06/2022	Client Comments		
09/13/2022	Zoning Report Reflected		

SURVEYOR'S CERTIFICATION

To : Westco L&W PCB, LLC and First American Title Insurance Company

This is to certify that this map or plat and the survey on which it is based were made in accordance with the 2021 Minimum Standard Detail Requirements for ALTA/NSPS Land Title Surveys, jointly established and adopted by ALTA and NSPS, and includes Items 1, 2, 3, 4, 6b, 7a, 7b1, 7c, 8, 9, 11b, 13, 14, 16, 17, and 19 of Table A thereof. The fieldwork was completed on July 21, 2022.

I certify that this plat represents an actual ground survey made by me or under my direction, and it does conform to the requirements for the Minimum Technical Standards for property boundary surveys as found in Chapter 5J-17.052.

ALFRED J. KESLER
LICENSE NUMBER
6947
STATE OF FLORIDA
PROFESSIONAL SURVEYOR AND MAPPER

Preliminary

PRELIMINARY DOCUMENT FOR REVIEW ONLY
This document is not to be used for construction, bidding, recordation, conveyance, sales, or as the basis for the issuance of a permit.

Alfred J. Kesler
Professional Surveyor and Mapper #6947
in the State of Florida

Date

SHEET 1 OF 1

FOR SCALE VERIFICATION AFTER DUPLICATION, THIS LINE SHOULD BE 1" LONG

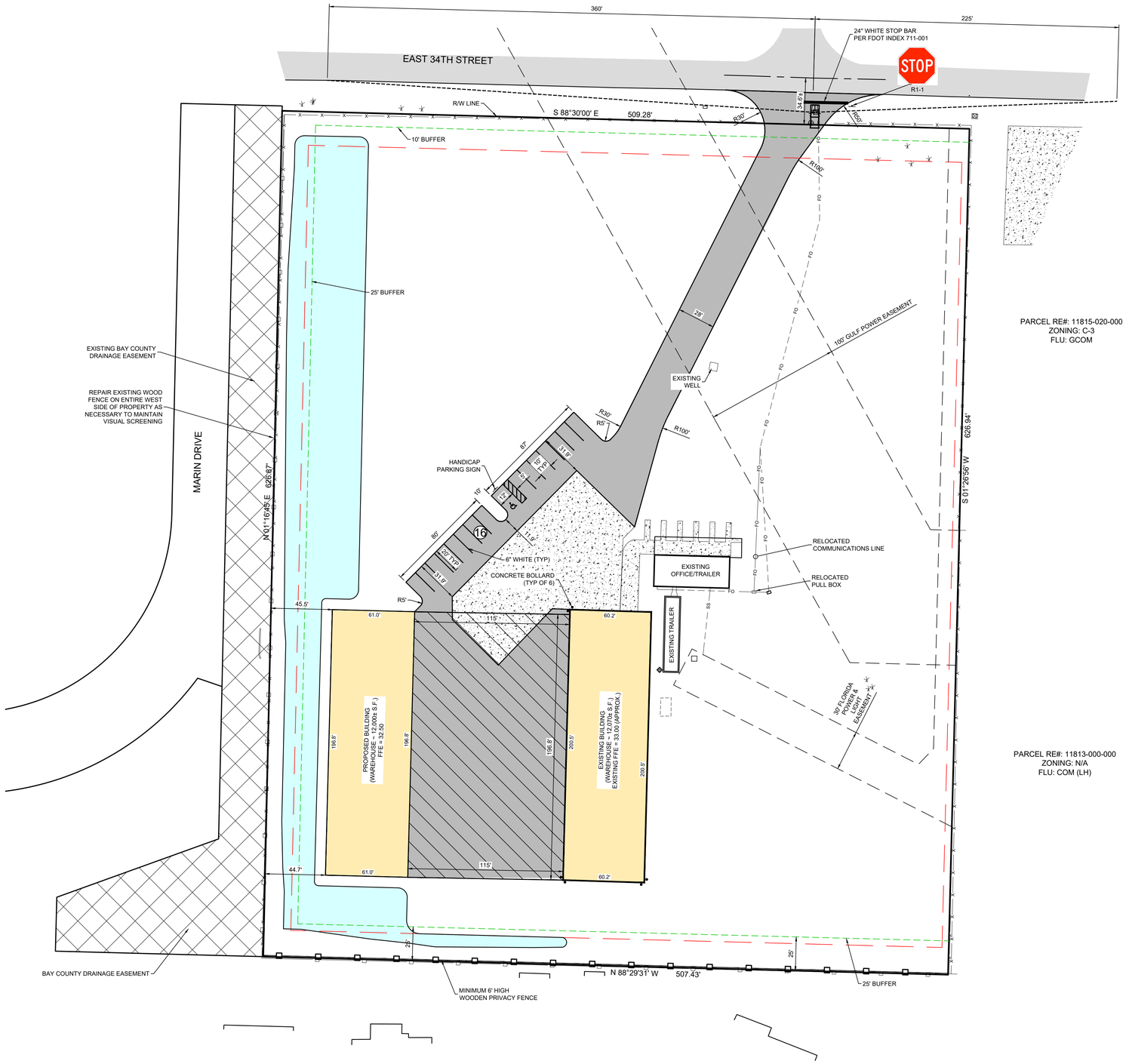

PARCEL RE#: 11815-020-000
ZONING: C-3
FLU: GCOM

PARCEL RE#: 11813-000-000
ZONING: N/A
FLU: COM (LH)

LEGEND

- EXISTING LIGHT POLE
- EXISTING POWER POLE
- EXISTING GUY ANCHOR
- SIGN POLE
- EXISTING CONCRETE
- PROPOSED HEAVY DUTY CONCRETE PAVEMENT
- EXISTING BAY COUNTY DRAINAGE EASEMENT
- PROPOSED LOADING ZONE
- PROPOSED 6' WOODEN PRIVACY FENCE

SCALE: 1" = 40'

0' 20' 40' 80'

SCALE: 1" = 40'

ZONED:
C-3 (BAY COUNTY)

BUFFER:
ZONE R-1: BUFFER D = 25'
10 FT. BUFFER ALONG STREETS & HIGHWAYS

BUILDING SETBACKS:
FRONT: 25'
SIDE: 5'
SIDE WHEN ADJACENT TO "R" ZONES: 20'
REAR: 20'

FLOOR AREA RATIO:
200%

IMPERVIOUS SURFACE RATIO:
75%

MAX. BUILDING HEIGHT:
230'

PARKING STALL REQUIREMENT:
STANDARD STALL 9'min.X20'min.
HC STALL 12'min.X20'min. W/5' ISLE
HC VAN STALL 12'minX20'min. W/8' ISLE
(90° PARKS)

PARKING REQUIREMENTS:

1.	COMMERCIAL, MANUFACTURING AND INDUSTRIAL ESTABLISHMENTS NOT CATERING TO RETAIL TRADE	2 SPACES PER 1,000 SQ. FT. OF GROSS FLOOR AREA FOR EACH SQ. FT. UP TO 100,000 SQ. FT. PLUS 1 SPACE PER 1,000 SQ. FT. OVER 100,000 SQ. FT. OF GROSS FLOOR AREA
2.	WHOLESALE, MANUFACTURE, PROCESSING OR ASSEMBLY	2 SPACES PER 1,000 SQ. FT. OF GROSS FLOOR AREA FOR EACH SQ. FT. UP TO 150,000 SQ. FT. PLUS 1 SPACE PER 1,000 SQ. FT. OVER 150,000 SQ. FT. OF GROSS FLOOR AREA
3.	WAREHOUSING NO ASSOCIATED WITH ANY OTHER INDUSTRIAL OR WHOLESALE USE	1/2 SPACE PER 1,000 SQ. FT. OF GROSS FLOOR AREA

174701 WESTCO L & W SUPPLY 228 EAST 34TH STREET SITE PLAN Sheet 2

REV	DATE	BY	REVISIONS
NOT	RELEASED FOR CONSTRUCTION BY:	DATE:	

SCALE:	AS NOTED
DESIGNED BY:	JDC
DRAWN BY:	JAH
REVIEWED BY:	JDC
ISSUE DATE:	APRIL 2023
ACAD FILE NAME:	174701e1.dwg

PANHANDLE ENGINEERING, INC.
ENVIRONMENTAL ENGINEERS • CIVIL ENGINEERS • LAND PLANNERS
600 Ohio Avenue Lynn Haven, Florida 32444
(850)763-5200 www.panhandleengineering.com

SITE PLAN
WESTCO L & W SUPPLY
228 EAST 34TH STREET
PANAMA CITY, FLORIDA

James H. Slonina, P.E. 39197
Christopher B. Forehand, P.E. 58028
J. Doug Crook, P.E. 66556
Wiatt Z. Lewis, P.E. 94236
William B. Thompson, P.E. 95046

JAMES D. CROOK LICENSED NO. 66556 STATE OF FLORIDA PROFESSIONAL ENGINEER

DPR CERTIFICATION #EB-7806

SHEET NUMBER
2

PROJECT NUMBER
174701

Date: 1/11/2024 10:26 AM File: P:\174701 L&W Supply-Westco Re-Engineer\1 CIVIL3D\Folder\Drawings\174701e1.dwg

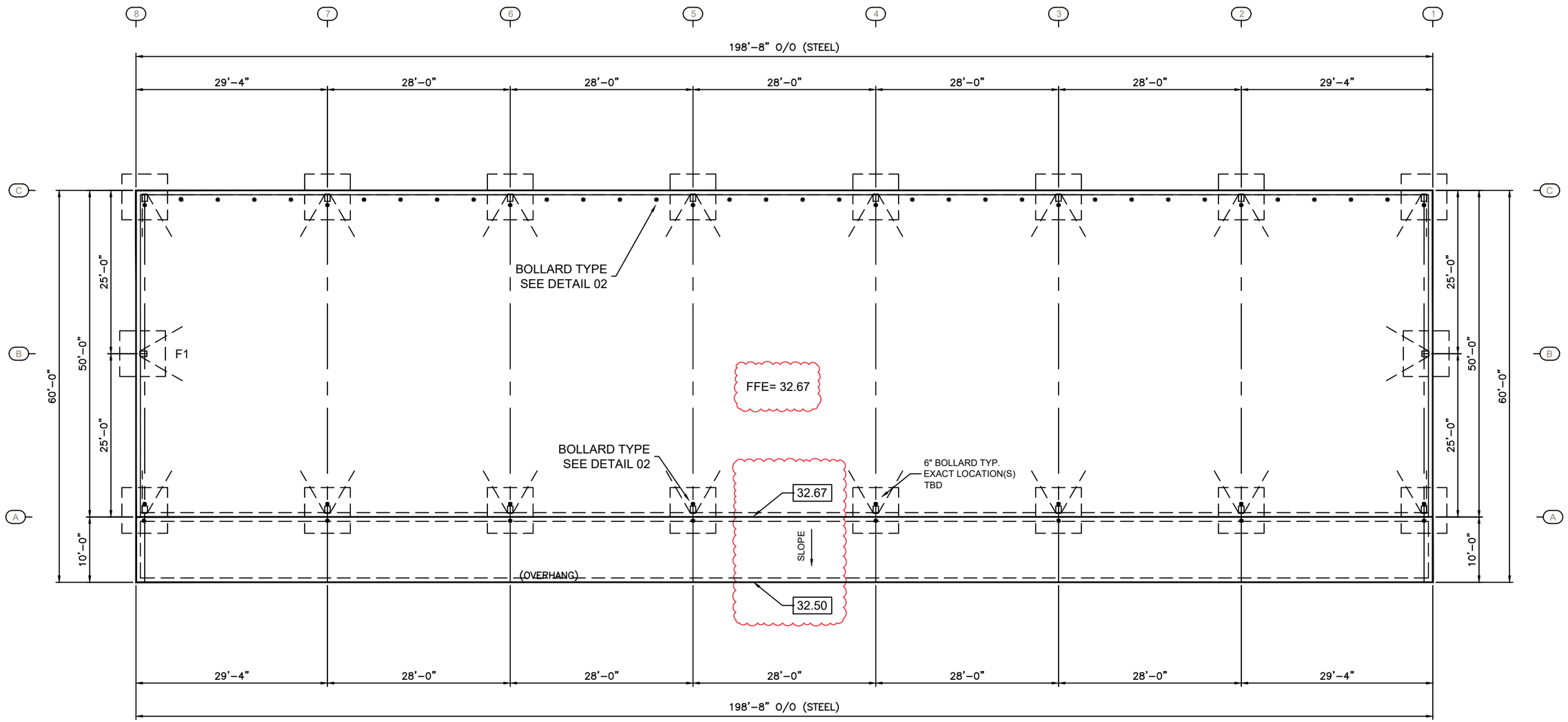

100	PLAN VIEW
S100	SCALE: 1/8" = 1'-0"

REV.	DATE	DESCRIPTION	DRFT	CHKD	ENG
00	04/27/2021	PRELIMIARY DESGN	EXAR	.	.
02	04/13/2023	REVISED	EXAR	.	.

PRELIMINARY ONLY
(NOT FOR CONSTRUCTION)

PLOT DATE: 4/20/2023 3:12 PM

CT DARNELL CONSTRUCTION
WE BUILD SOLUTIONS
A Division of WTD Holdings, Inc.
2255 Justin Trail | Alpharetta, GA 30004
(PH) 800.353.0892 (FAX) 770.569.9944
www.CT-Darnell.com | www.Sunbelt-Rack.com

SALESPERSON: CLINT

PROJECT NUMBER: Q21-15457

PROJECT NAME: L&W SUPPLY PANAMA CITY, FL

SHEET DESCRIPTION: PLAN VIEW

SHEET FILE NO: D21-15457-02-S100-v02

STRC #: 02

SHEET NO: S100

SCALE: AS NOTED

LOCAL FILE: S:\SUNBELTshared\DRAFTING_DESIGN\01_CONSTRUCTION\PROJECTS\2021\15457_L&WSUPPLY_PANAMACITY_FL\01_ctdarnell_sunbeltrack_drawings\a_preliminary_drawings\D21-15457-00-00-02.dwg

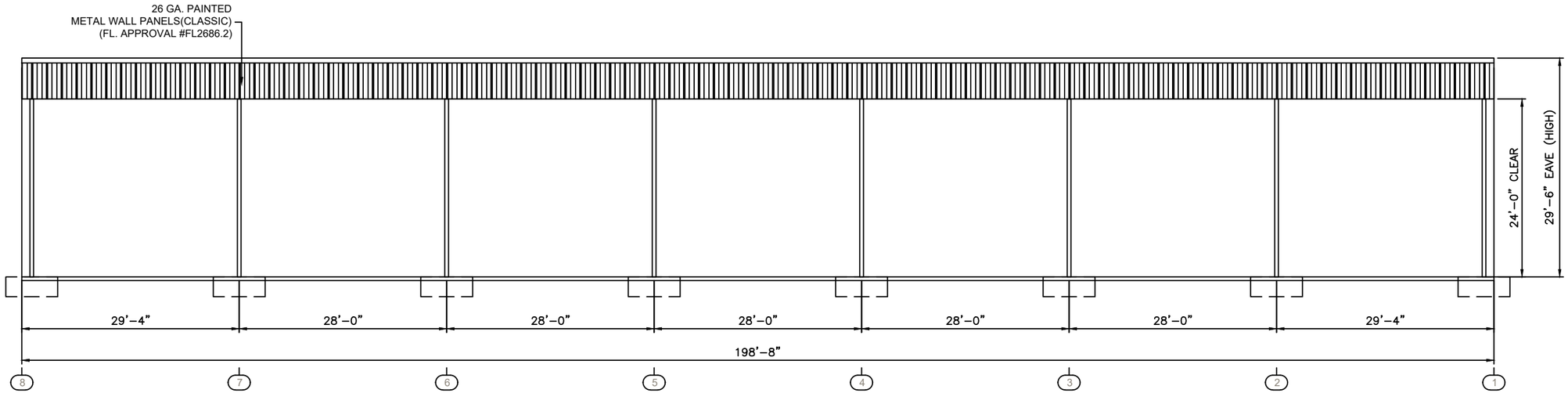

100 FRONT SIDEWALL ELEVATION
S200 SCALE: 1/8" = 1'-0"

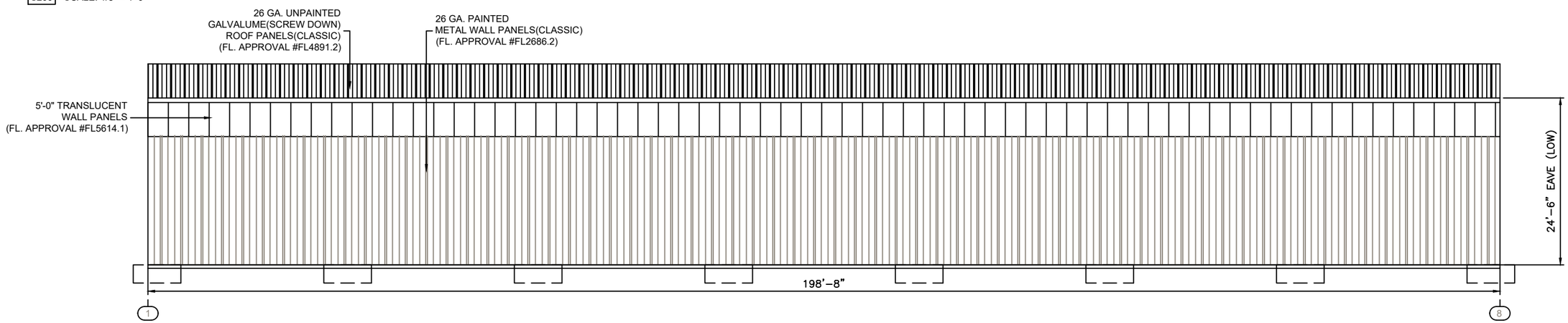

200 BACK SIDEWALL ELEVATION
S200 SCALE: 1/8" = 1'-0"

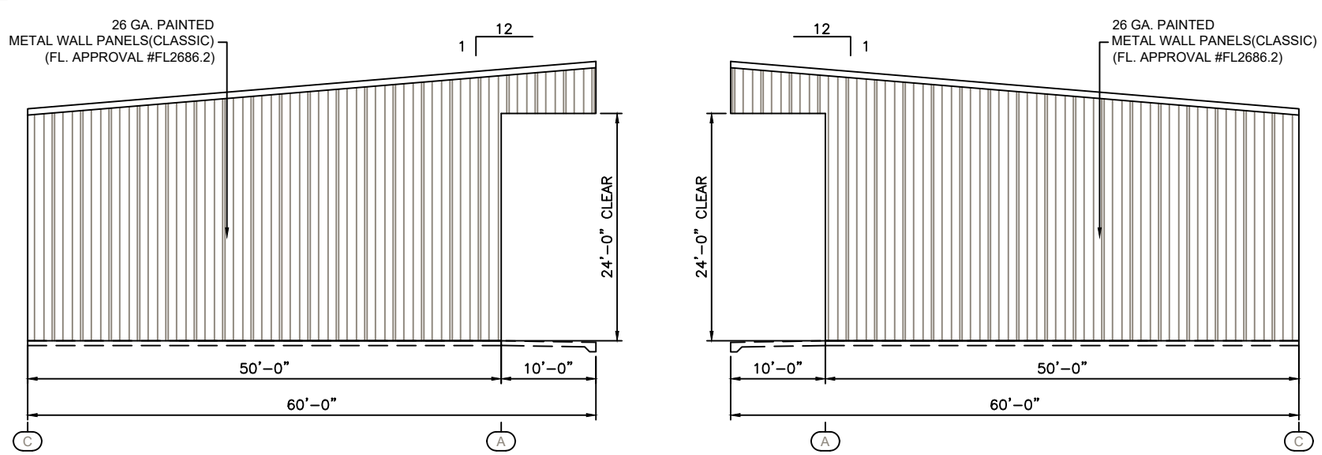

300 ENDWALL(S)
S200 SCALE: 1/8" = 1'-0"

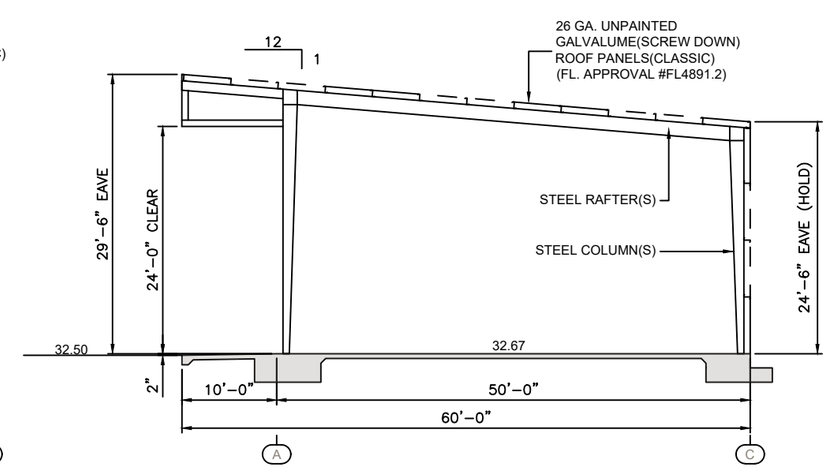

400 FRAME LINE(S) 2-7
S200 SCALE: 1/8" = 1'-0"

REV.	DATE	DESCRIPTION	DRFT	CHKD	ENG
00	04/27/2021	PRELIMIARY DESGN	EXAR	.	.

PRELIMINARY ONLY
(NOT FOR CONSTRUCTION)

PLOT DATE: 4/20/2023 3:12 PM

CT DARNELL CONSTRUCTION
WE BUILD SOLUTIONS
A Division of WTD Holdings, Inc.
2255 Justin Trail | Alpharetta, GA 30004
(PH) 800.353.0892 (FAX) 770.569.9944
www.CT-Darnell.com | www.Sunbelt-Rack.com

SALESPERSON: CLINT
PROJECT NUMBER: Q21-15457

PROJECT NAME: L&W SUPPLY PANAMA CITY, FL
SHEET DESCRIPTION: ELEVATIONS
SHEET FILE NO: D21-15457-02-S2-v02

STRC #: 02
SHEET NO: S200
SCALE: AS NOTED

LOCAL FILE: S:\SUNBELTshared\DRAFTING_DESIGN\01_CONSTRUCTION\PROJECTS\2021\15457_L&WSUPPLY_PANAMACITY_FL\01_ctdarnell_sunbeltrack_drawings\a_preliminary_drawings\D21-15457-00-00-02.dwg

LANDSCAPE REQUIREMENT CHART
PER BAY COUNTY CODE

REQUIRED LANDSCAPE PERCENTAGE
(10% OR GREATER - RETENTION AREAS NOT INCLUDED)

SITE AREA	LANDSCAPED AREA	PERCENTAGE
318,690 S.F.	158,828 S.F.	50%

INTERIOR PLANTING AREAS
(1 TREE PER EACH 2,700 S.F. OF PARKING STALL AREA)

TOTAL STALL AREA	REQUIRED TREES
3,544 S.F.	2

(1 SHRUB PER 5 LINEAR FEET FRONTAGE)

TOTAL LINEAR FEET FRONTAGE	REQUIRED SHRUBS
120'	24

RIGHT OF WAY LANDSCAPING
(PLANTINGS DICTATED BY OPTION TYPE OVER 50' INCREMENTS)

BOUNDARY	LENGTH	REQUIRED LANDSCAPING	PROVIDED LANDSCAPING
NORTHERN	509'	25' TYPE 'D' (31 CANOPY TREES, 20 UNDERSTORY TREES, 143 SHRUBS)	25' TYPE 'D' (31 CANOPY TREES, 20 UNDERSTORY TREES, 143 SHRUBS)
SOUTHERN	N/A	N/A	N/A
EASTERN	N/A	N/A	N/A
WESTERN	N/A	N/A	N/A

ADJACENT USE BUFFERS
(PLANTINGS DICTATED BY OPTION TYPE OVER 50' INCREMENTS)

BOUNDARY	ABUTTING USE	LENGTH	REQUIRED LANDSCAPING	PROVIDED LANDSCAPING
NORTHERN	N/A	N/A	N/A	N/A
SOUTHERN	R-1	507'	25' TYPE 'D' (30 CANOPY TREES, 20 UNDERSTORY TREES, 142 SHRUBS)	6' WOOD FENCE
EASTERN	COM (LH)	627'	NONE REQUIRED	N/A
WESTERN	R-1	627'	25' TYPE 'D' (38 CANOPY TREES, 25 UNDERSTORY TREES, 176 SHRUBS)	6' WOOD FENCE

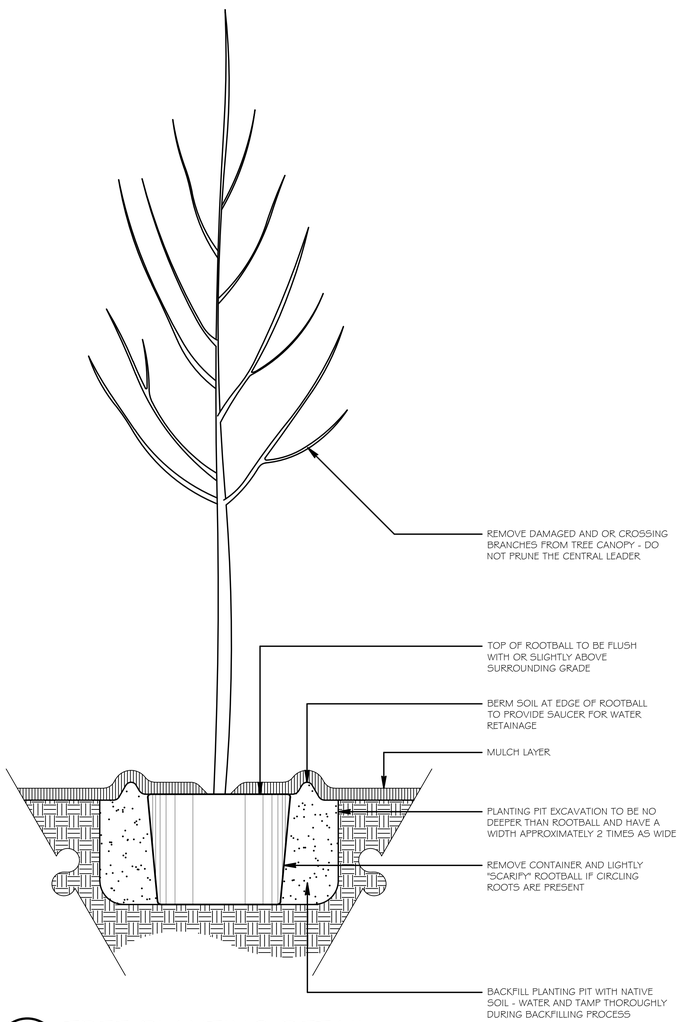

1 / L1 TREE PLANTING DETAIL
NOT TO SCALE

NORTH

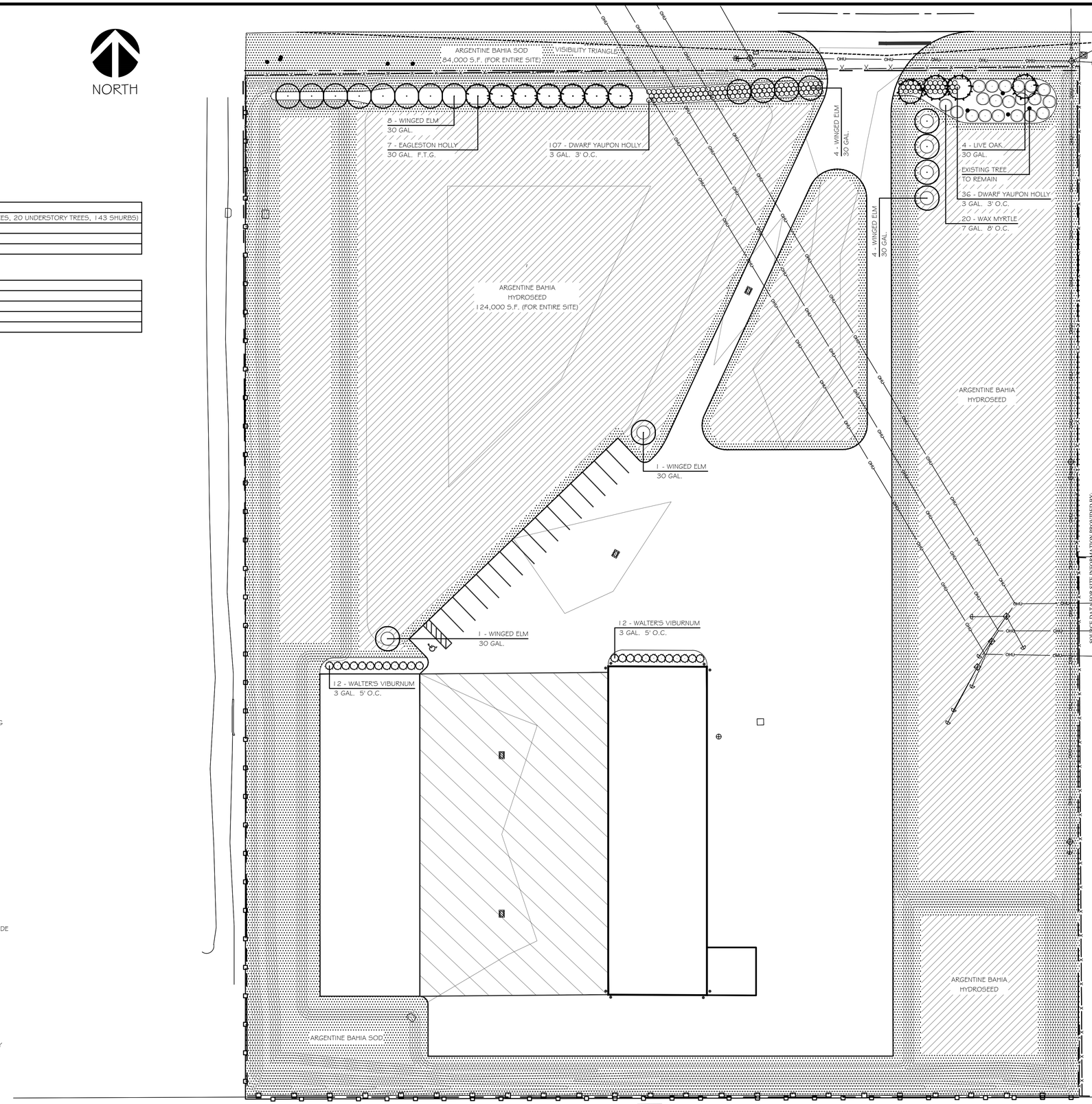

SOURCE DATA FOR SITE INFORMATION PROVIDED BY:

LAWNSCAPES, INC.
LANDSCAPE ARCHITECTURE • CONSULTING • PLANNING • MAINTENANCE • NURSERY
P.O. Box 17216 • Panama City, FL 32404
850-763-2975
www.Lawnscapesinc.com

LANDSCAPE PLAN

L & W SUPPLY

228 EAST 34TH STREET
BAY COUNTY, FLORIDA

NO.	DATE	INITIALS	REVISION DESCRIPTION
01	03/29/22	-	COUNTY SUBMITTAL
02			
03			
04			
05			
06			
07			

FLORIDA LANDSCAPE ARCHITECT #6666928
SEAN P. DALY

03/29/22

PROJECT NUMBER:

SCALE:
1" = 30'

DESIGN BY:
CHECKED BY:

SHEET NUMBER
L1
OF TWO

GENERAL IRRIGATION NOTES:

1. ALL UTILITIES TO BE LOCATED BEFORE COMMENCEMENT OF CONSTRUCTION. APPLY NECESSARY PROTECTIVE MEASURES TO REDUCE POSSIBILITY OF DAMAGE TO EXISTING UTILITIES DURING CONSTRUCTION.
2. SYSTEM DESIGNED TO USE HUNTER INDUSTRIES EZ05 COMPONENTS.
3. EACH VALVE LOCATION WILL REQUIRE ONE (1) EZ-1 DECODER.
4. 2-WIRE CONTROL WIRE TO BE 14 GAUGE. INSTALL ONE (1) RED WIRE AND ONE (1) BLUE WIRE CONTINUOUSLY FROM CONTROLLER TO FURTHEST VALVE.
5. USE DIRECT BURIAL WATERPROOF SPLICE KITS AT ALL WIRE SPLICE LOCATIONS.
6. CONTROLLER TO BE GROUNDED PER MANUFACTURERS DIRECTION.
7. ALL LATERAL LINES TO MAINTAIN 8" MINIMUM COVER. ALL MAINLINE TO MAINTAIN 12" MINIMUM COVER.
8. ALL SPRAYS AND ROTORS TO BE MOUNTED FLUSH WITH FINAL GRADE.
9. INSTALL SPRAYS AND ROTORS 3" FROM CONCRETE/HARDSCAPE EDGES AND 12" FROM STRUCTURES.
10. ALL WATERING ARCS TO BE ADJUSTED TO PREVENT OVERSPRAY ONTO ADJACENT BUILDINGS OR HARDSCAPE.

CONTROL AND WIRE PATH NOTES:

1. ALLOW 36" OF EXTRA WIRE LOOPED AT EACH VALVE LOCATION AND WIRE PATH TERMINATION.
2. NO SPLICES TO BE BURIED. ALL SPLICES TO BE INSTALLED IN MINIMUM 10" ROUND VALVE BOX.

SYSTEM DESIGN NOTES:

WATER SOURCE:
EXISINTING WELL
VERIFY WELL PROVIDES 30 GPM AT 60 PSI.
PUMP MAY NEED TO BE INCREASED OR
DEDICATED IRRIGATION WELL MAY NEED TO BE INSTALLED.
DESIGN VOLUME: 30 GPM
DESIGN PRESSURE: 60 PSI

NORTH

PIPING LEGEND

- 2 1/2" CLASS 200 MAINLINE
- 1" CLASS 200 LATERAL
- 1-1/4" CLASS 200 LATERAL
- 1-1/2" CLASS 200 LATERAL
- 2" CLASS 200 LATERAL
- 2-1/2" CLASS 200 LATERAL
- 4" SCH. 40 SLEEVE
- ZONE # / SIZE — CONTROL VALVE IDENTIFICATION TAG

IRRIGATION SCHEDULE

QUANTITY	SYMBOL	SIZE / DESC.	DESCRIPTION	MANUFACTURER
6	◈	1.5	5004-PC W/ 1.5 NOZZLE	RAINBIRD
139	◈	2.5	5004-PC W/ 2.5 NOZZLE	RAINBIRD
9	◈	5.0	5004-FC W/ 5.0 NOZZLE	RAINBIRD
2	◈	1.5-12	5012-PC W/ 1.5 NOZZLE	RAINBIRD
12	◈	2.5-12	5012-PC W/ 2.5 NOZZLE	RAINBIRD
4	◈	5.0-12	5012-FC W/ 5.0 NOZZLE	RAINBIRD
17	⊕	1-1/2"	1-1/2" CONTROL VALVE PGV-151	HUNTER
1	Ⓐ	-	CONTROLLER PRO-C W/ EZ-DM MODULE	HUNTER
1	▲	-	RAIN SENSOR RAIN-CLIK	HUNTER

NOTE:

IRRIGATION IS INTENDED TO AID IN ESTABLISHMENT OF SOD AND PLANTING AREAS. IT IS NOT INTENDED TO PROVIDE 100% COVERAGE OF HYDROSEEDED AREAS.

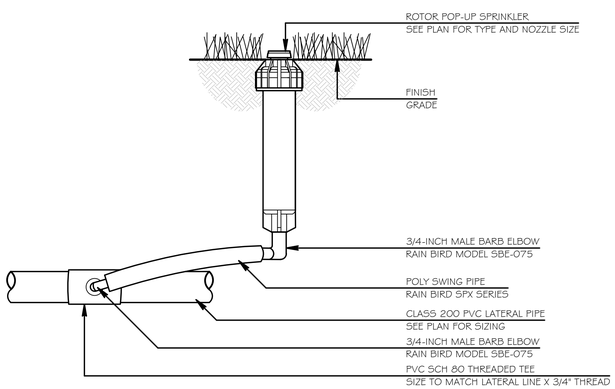

1 / L2 POP-UP ROTOR INSTALLATION
NOT TO SCALE

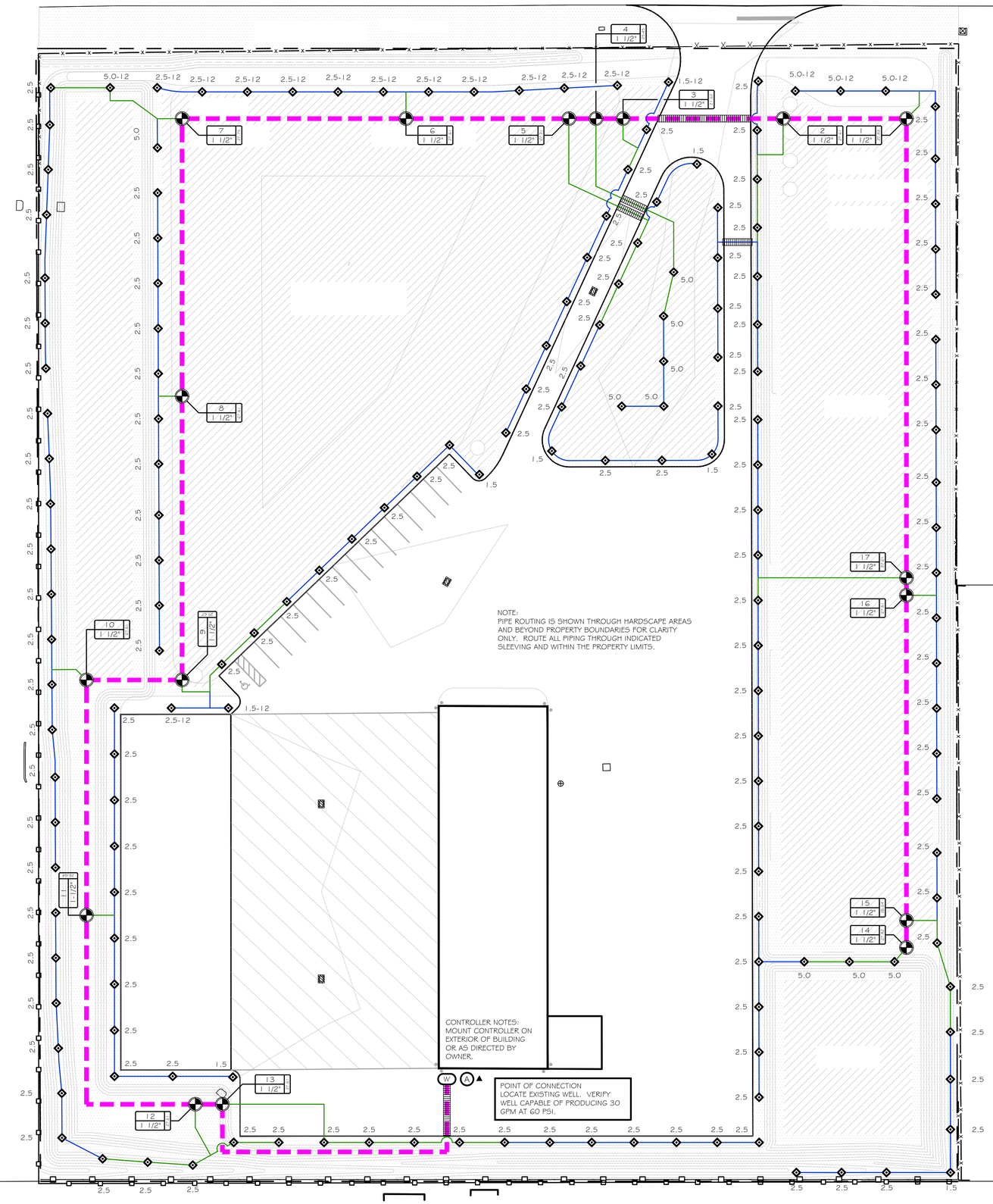

LAWNSCAPES, INC.
LANDSCAPE DESIGN • CONSULTING • IRRIGATION • MAINTENANCE • NURSERY
P.O. Box 1726 • Panama City, FL 32404
850-763-2975
www.Lawnscapesinc.com

SOURCE DATA FOR SITE INFORMATION PROVIDED BY:

IRRIGATION PLAN

L & W SUPPLY

228 EAST 34TH STREET
BAY COUNTY, FLORIDA

NO.	DATE	INITIALS	REVISION DESCRIPTION
01	03/29/22	-	COUNTY SUBMITTAL
02			
03			
04			
05			
06			
07			

FLORIDA LANDSCAPE ARCHITECT #6666928
SEAN P. DALY

03/29/22

PROJECT NUMBER:

SCALE: 1" = 30'

DESIGN BY:
CHECKED BY:

SHEET NUMBER
L2
OF TWO