Addition to
Pace Fire Station #4
Pace Fire Rescue District
Pace, Florida

ABBREVIATIONS

A.B. anchor bolt
A.F.F. above finished floor
ACOUST. acoustical
ACT. acoustical ceiling tile
A/C air conditioning
ALT. alternate
ALUM. aluminum
APPROX. approximate
ARCH. architect(ural)
ASPH. asphalt
BIT. bituminous
BLK. block
BRK. brick
BLKG. blocking
BOT.(T.) bottom
BLDG. building
BD. board
CLG. ceiling
CER. ceramic
C.H. ceiling height
CIR. circle
CLR. clear(ance)
CMU concrete masonry unit
COL. column
COMP. composite(tion)
CONC. concrete
CONSTR. construction
CONT. continuous
C.J. control joint
C.O. clean out
CORR. corridor/corrugated
DTL. detail
DIAG. diagonal
DIAM. diameter
DISP. dispenser
DIV. division
DN. down
D.S. downspout
D.F. drinking fountain
DWGS. drawings
EA. each
E.F. exhaust fan
ELEC. electric(al)
E.W.C. electric water cooler
ELEV. elevation
EMERG. emergency
EQ. equal
EXH. exhaust
EXIST. existing
EXP. expansion
EXP. JT. expansion joint
EXT. exterior
FIN. finish
F.F. finished floor
F.F.E. finished floor elevation
F.E.C fire extinguisher cabinet
FL. floor
F.D. floor drain
FLUOR. fluorescent
FTG. footing
FURR. furring
GA. gauge
GALV. galvanized
G.C. general contractor
G.B. grab bar
GYP. gypsum
H.C. hollow core
HDW. hardware
HVAC heating/ ventilating/ air conditioning
HT. height
H.M. hollow metal
HORZ. horizontal
H.B. hose bibb
HR. hour
H.W.H. hot water heater
INCL. included
I.D. inside diameter
INSUL. insulate(d)/(ion)
INT. interior
INTER. intermediate
INV. invert
JT. joint
LBL. label
LAB. laboratory
LAM. laminated
LAV. lavatory
L.H. left hand
LT. light
L. length
LOUV. louver
M.H. manhole
MFR. manufacturer
MAT. materials
MAX. maximum
MECH. mechanical
MED. medium
MBR. member
MEMB. membrane
MET. metal
MTL. metal
MIN. minimum
MIR. mirror
MISC. miscellaneous
M.O. masonry opening
MTD. mounted
N.R.C. noise reduction coeff.
N.I.C. not in contract
NO. number
NOM. nominal
O.C. on center(s)
OPNG. opening
OPP. opposite
O.H. opposite hand
O.D. outside diameter
O.H. overhead
PNL. panel
PVMT. pavement
PERF. perforated
PLAS. plastic
PL. plate
PLumb. plumbing
PLWD. plywood
PTD. painted
P.T. pressure treated
P.V.C. polyvinyl chloride
P.S.F. pounds per square foot
P.S.I. pounds per square inch
P.L. property line
R. radius
RE. reference
REG. regular
REINF. reinforced(ing)
R.C.P. reinforced concrete pipe
RESIL. resilient
R.A. return air
R.H. right hand
R.O.W. right of way
RD. roof drain
RL. rain leader
R.O. rough opening
SCHED.schedule
SECT. section
STHG. sheathing
SHT. sheet
SIM. similar
S.C. solid core
S.C.W. solid core wood
SPEC. specification(s)
SQ. square
STAIN.STL.stainless steel
STD. standard
STL. steel
STOR. storage
STRUCT. structural
SUSP. suspended
TEL. telephone
THK. thick(ness)
TG tempered glass
T&G tongue and groove
T.O.C. top of concrete
T.O.J. top of joist
T.O.R. top of roof
TYP. typical
U.N.O. unless noted otherwise
V.T.R. vent through roof
V.T.S. vinyl transition strip
VERT. vertical
V.C.T. vinyl composition tile
W.C. water closet
W.R. water resistant
W.W.F. welded wire fabric
W/ with

GRAPHIC SYMBOLS

RIGID INSULATION
BATT INSULATION
CONCRETE
GYPSUM BOARD
PLYWOOD
WOOD- ROUGH
WOOD- FINISH
BRICK
CONCRETE MASONRY UNITS
METAL
SOIL

KITCHEN EQUIPMENT
TOILET ACCESSORY
DOOR MARK
2' EXISTING CONTOUR LINE
2' NEW CONTOUR LINE
BROKEN LINE
CENTER LINE
HIDDEN LINE
ELEVATION KEY — ELEVATION KEY # — SHEET #
SECTION KEY — SECTION KEY # — SHEET #
ENLARGED DETAIL — DETAIL KEY # — SHEET #

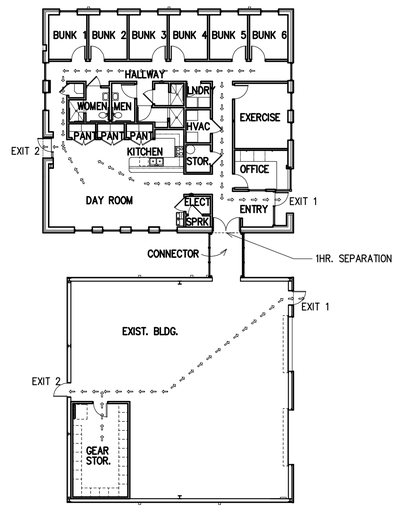

Life Safety Plan
1/16"=1'-0"

VICINITY MAP

6926 CHUMUCKLA HWY, MILTON, FL 32571

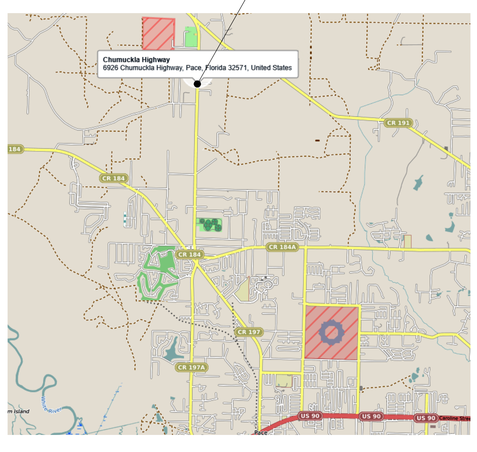

CODE SUMMARY

Florida Building Code 8th Edition (2023)
Florida Fire Prevention Code 6th Edition

Risk IV Category 163 mph wind speed

Allowable Area: FBC-Table 506.2

Fire Station with Residential and Storage Occupancies

	Allowed	Actual
Number of Stories	1	1
Type VB - Sprinklered*	28,000 sf (w area increase)	5,379 s.f.

* sprinklers required per NFPA 13.3.2.3
R2 Residential Occupancy (Sleeping quarters)
S2 Storage Occupancy (Truck bays)

Occupant Load: FBC-Table 1004.5

Residential Occupancy	2800 s.f. @ 120 sf/person = 23
Storage Area	2500 s.f. @ 200 sf/person = 12
Total Occupant Load	35

Egress Requirements:

	Required	Actual
Maximum travel distance (FBC-Table 1017.2)	200 ft.	56 ft.
Level egress width - 0.2 per occupant (FBC-Table 1005.3.2)	29.8" or 32" (min. @ doors)	36"
Minimum clear opening @ doors (FBC-Section 1010.1.1)	32"	36"

Exit Requirements:
(FBC-Table 1006.3.2)

	Required	Actual
Residential (Sleeping quarters)	2	2
Storage (Truck bays)	2	2

Fire-Resistance Rating
(FBC-601)

	Required	Actual
Bearing + Nonbearing Walls, Floor, and Roof	0	0
Mixed Occupancy Separation (Table 508.4)	1	1

Plumbing Fixtures
(FPC-TABLE 403.1)

	Required	Actual
Water Closets - Male and Female (1 per 10)	1	1
Lavatories (1 per 10)	1	1
Drinking Fountains (1 per 100)	1	1 dual

LIST OF DRAWINGS

PERSONNEL

OWNER:
Pace Fire Rescue District
Pace, Florida

ARCHITECT:
Quina Grundhoefer Architects, P.A.
Pensacola, Florida

MECHANICAL ENGINEER:
H.M. Yonge & Associates, Inc.
Pensacola, Florida

ELECTRICAL ENGINEER:
H.M. Yonge & Associates, Inc.
Pensacola, Florida

STRUCTURAL ENGINEER:
Joe DeReuil Associates, LLC
Pensacola, Florida

CIVIL ENGINEER:
McKim Creed Engineering
Pensacola, Florida

PRODUCT APPROVAL LIST

MANUFACTURER**	MODEL #	CATEGORY	SUBCATEGORY	APPROVAL #	VALIDATION ENTITY
Coral Architectural Products	FL550	Panel Walls	Storefront	FL10467.2	Shawn G. Collins, PE
EFCO Corporation	321G	Windows	Casement	FL17320	Robert J. Amoruso
Schlage Lock Company, LLC	Steelcraft H series	Exterior Doors	Swinging Exterior Doors	FL3905.1	Eric C. VanHorn, P.E.
W.R. Grace	Ice and Water Shield	Roofing	Underlayment	FL298.1	PRO Ashpalt Technologies
Berridge	Standing Seam-Roof Panel	Roofing	Metal Roofing	FL11159.2	James Buckner, P.E.

** CONTRACTOR TO SUBMIT MANUFACTURER'S BASED ON SPECIFICATIONS AND PRODUCT APPROVAL NUMBERS IF DIFFERENT THAN THOSE SHOWN

Project
Addition to
Pace Fire Station #4
Pace Fire Rescue District
Pace, Florida

Project No.
1223

Set No.

Date: 4/30/24

PACE FIRE STATION #4 ADDITION

PROJECT NO. 07615-0017

2024-04-30

BID SET

VICINITY MAP NOT TO SCALE

ADDRESS: 6926 CHUMUCKLA HWY
MILTON, FL 32571

CLIENT: QUINA GRUNDHOEFER ARCHITECTS, P.A.
400 WEST ROMANA STREET
PENSACOLA, FL 32502

OWNER/DEVELOPER: PACE VOLUNTEER FIRE INC.
4773 PACE PATRIOT BLVD.
PACE, FL 32571

McKIM&CREED
1206 N. Palafox Street
Pensacola, Florida 32501
Phone: (850) 994-9503

CA Lic. No. 29588
www.mckimcreed.com

PROJECT INFORMATION

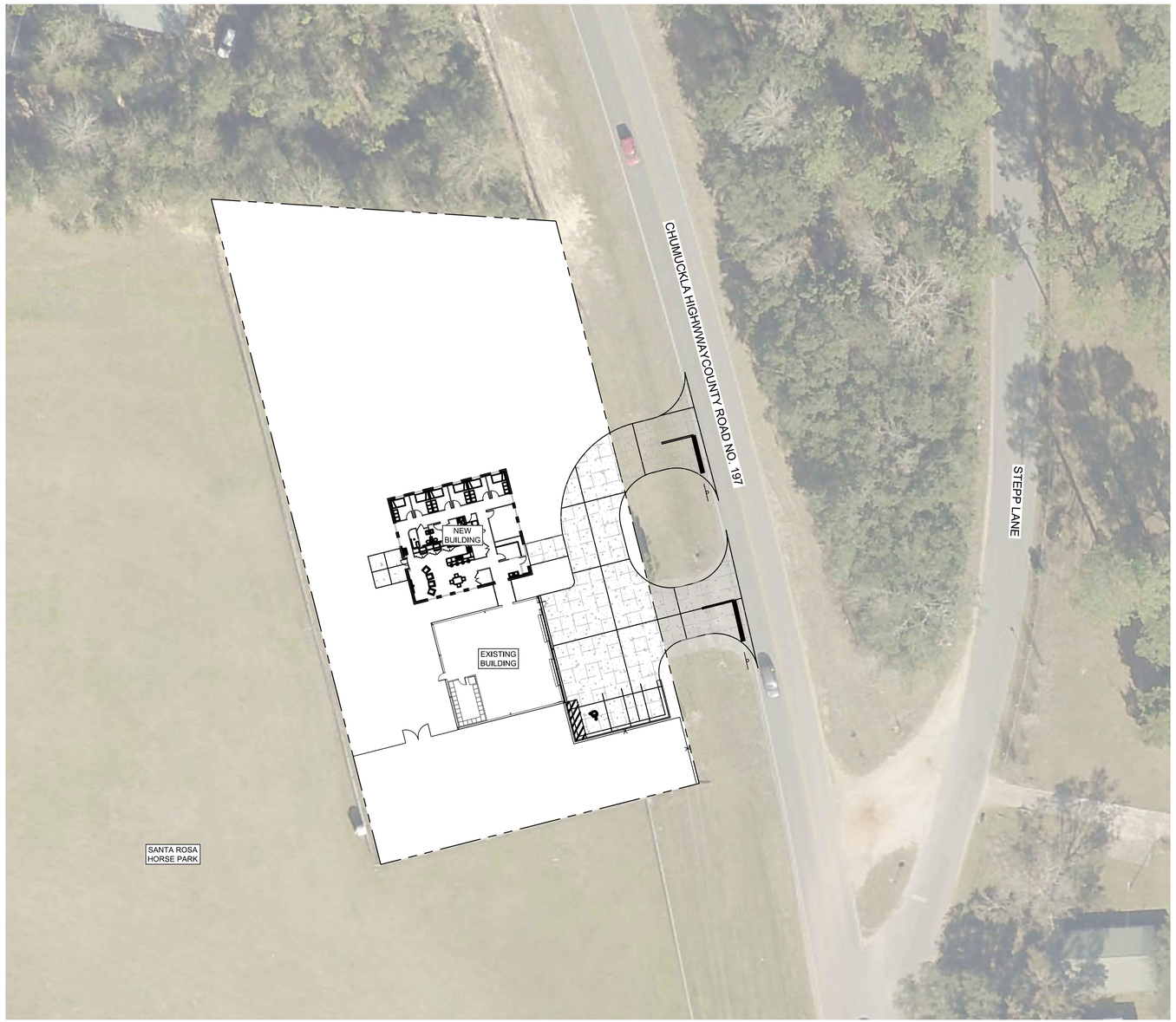

SITE MAP SCALE: 1" = 30'

Sheet List Table

SITE DATA TABLE

PROPERY REF. NO.: 07-2N-29-0000-00104-0000
PARCEL AREA: 1.01 AC
STREET ADDRESS: 6926 CHUMUCKLA HWY
MILTON, FL 32571

ZONING: AG-RR
CURRENT USE: WAREHOUSE-STORAGE
FUTURE LAND USE: WAREHOUSE-STORAGE
PROPOSED USE: VOLUNTEER FIRE STATION

BUILDING SETBACKS (LDC CH. 2, SEC. 2.05.01. TABLE 2.05.01.a)
FRONT: 50'
REAR: 25'
SIDE: 15'

LANDSCAPE BUFFERS (LDC CH. 4, SEC. 4.07.04.c.iv & F TABLE)
FRONT: NONE
REAR: NONE
NORTH: 35' TYPE C

LOT COVERAGE - CONTRIBUTING AREA

COVERAGE TYPE	EXISTING		EXISTING (%)	PROPOSED		PROPOSED (%)
	AC	SF		AC	SF	
POND AREA	0.066	2,880	13.39%	0.114	4,969	16.22%
BUILDING AREA	0.058	2,525	11.76%	0.122	5,325	17.35%
OTHER IMPERVIOUS	0.095	4,131	19.27%	0.126	5,461	17.92%
PERVIOUS	0.274	11,932	55.58%	0.341	14,850	48.51%
OVERALL	0.493	21,468	100.00%	0.703	30,605	100.00%

FLOOD ZONE: THE PARCELS SHOWN ARE LOCATED WITHIN THE FOLLOWING FLOOD ZONE(S) AS DETAILED BY FEMA FORM (FLOOD INSURANCE RATE MAP) INFORMATION DESCRIBED BELOW:

FLOOD ZONE(S)	NFIP COMMUNITY NUMBER*	MAP NUMBER*	PANEL NUMBER(S)	MAP SUFFIX*	MAP REVISION DATE
X	120274	12113C	0285	H	11/19/2021

811 Know what's below. Call before you dig.

SHEET INDEX

PROJECT NO. 07615-0017

SUBMITTAL DATE: 2024-04-30

I:\07615\0017\ENG\80-DRAWINGS\CIVIL\G-000 - COVER SHEET.DWG ---- 05/03/2024 13:16:23 ALEX MAINIERO

GENERAL NOTES

1. NO DEVIATIONS FROM THE PROJECT PLANS OR SPECIFICATIONS ARE ALLOWED WITHOUT PRIOR WRITTEN APPROVAL FROM THE ENGINEER OF RECORD AND THE ARCHITECT.
2. IN CASE OF A DISCREPANCY ON THESE DRAWINGS, BETWEEN THESE DRAWINGS AND THE DRAWINGS OF OTHER DISCIPLINES, OR BETWEEN THESE DRAWINGS AND CONDITIONS IN THE FIELD, THE MORE STRINGENT REQUIREMENT MUST BE MET. REPORT ANY DISCREPANCY TO ENGINEER PRIOR TO ACTION.
3. LOCATIONS AND ELEVATIONS OF UTILITIES SHOWN ON PLANS ARE TO BE CONSIDERED APPROXIMATE ONLY. THE CONTRACTOR MUST EMPLOY THE USE OF GROUND PENETRATING RADAR (GPR) EQUIPMENT BY A QUALIFIED COMPANY AND PERSONNEL TO LOCATE, IDENTIFY AND PROTECT EXISTING UNDERGROUND UTILITIES IN THE AREA OF WORK. ANY UTILITIES SPOTTED MUST BE DRAWN ON THE SITE PLAN PROVIDED BY THE ARCHITECT/ENGINEER AND SUBMITTED AS PART OF THE AS-BUILT DRAWINGS. COST OF GPR LOCATES MUST BE INCLUDED IN THE CONTRACTOR'S BASE BID. NOTIFY UTILITY AND ARCHITECT/ENGINEER OF CONFLICTS BETWEEN EXISTING AND PROPOSED FACILITIES.
4. DAMAGE TO EXISTING SIDEWALKS, ASPHALT OR OTHER IMPROVEMENTS OUTSIDE THE PRIMARY PROJECT LIMITS DURING DEMOLITION WILL REQUIRE REPAIR AND/OR REPLACEMENT BY THE CONTRACTOR, AT NO ADDITIONAL COST TO THE OWNER.
5. THE CONTRACTOR MUST COMPLY WITH ALL FEDERAL AND STATE REGULATIONS CONCERNING NOTIFICATION TO THE REGULATORY AUTHORITIES OF ANY AND ALL DEMOLITION.
6. THE CONTRACTOR MUST PROVIDE THE ENGINEER WITH REDLINED DRAWINGS FOR THE ENGINEER'S USE IN PREPARING AS-BUILT CERTIFICATIONS AND AS-BUILT RECORD DRAWINGS FOR THE OWNER. AS-BUILT INFORMATION WILL INCLUDE BUT NOT BE LIMITED TO: ROUTING OF ALL EXISTING AND PROPOSED UNDERGROUND UTILITIES WITH DISTANCES TO/LOCATIONS OF LINES, BENDS, FITTINGS, STRUCTURES, AND OTHER APPURTENANCES MEASURED FROM AT LEAST TWO FIXED POINTS; TOP, BOTTOM, AND PIPE INVERT ELEVATIONS OF ALL STORM WATER AND SANITARY SEWER STRUCTURES, INCLUDING CLEANOUTS, RELATIVE TO FINISHED FLOOR; REVISIONS TO SITE LAYOUT DEPICTED IN THE PLANS.
7. A SEPARATE PERMIT IS REQUIRED FOR ALL BUSINESS SIGNAGE.
8. THE CONTRACTOR IS RESPONSIBLE FOR OBTAINING A UTILITY PERMIT FROM THE COUNTY ROAD AND BRIDGE DEPARTMENT PRIOR TO COMMENCING ANY WORK IN THE COUNTY'S RIGHT OF WAY.
9. DRIVEWAY CUTS ARE TO BE REVIEWED ON AN INDIVIDUAL BASIS BY THE ROAD AND BRIDGE DEPARTMENT.
10. CONTRACTOR MUST OBTAIN ALL NECESSARY DEWATERING PERMITS PRIOR TO COMMENCING ANY SUCH ACTIVITIES, AND IS FURTHER RESPONSIBLE FOR ALL TESTING, DOCUMENTATION AND REPORTING AS REQUIRED BY THE DEWATERING PERMIT.

GENERAL NOTES FOR EROSION AND SEDIMENT CONTROL

1. CONTRACTOR IS RESPONSIBLE FOR THE INSTALLATION (PRIOR TO CONSTRUCTION) AND MAINTENANCE/REPAIRS (DURING CONSTRUCTION) OF EROSION AND SEDIMENT CONTROL MEASURES AS REQUIRED TO RETAIN ALL SEDIMENT AND EROSION ON THE SITE OF DEVELOPMENT. THE PROVISIONS SHOWN HEREIN REPRESENT POTENTIAL EROSION CONTROL MEASURES TO BE TAKEN.
2. THE CONTRACTOR IS TO DETERMINE AND PREPARE A FINAL EROSION CONTROL PLAN UTILIZING WHAT BMPs THEY DEEM NECESSARY TO ENSURE ALL SEDIMENT REMAINS ON-SITE.
3. AT THE TIME OF SITE PREPARATION FOR PERMANENT VEGETATIVE STABILIZATION, ANY SOIL THAT WILL NOT PROVIDE A SUITABLE ENVIRONMENT TO SUPPORT PERMANENT COVER MUST BE REMOVED OR TREATED IN SUCH A WAY THAT WILL PERMANENTLY ADJUST THE SOIL CONDITION AND RENDER IT SUITABLE FOR PERMANENT COVER. IF THE REMOVAL OR TREATMENT OF THE SOIL WILL NOT PROVIDE SUITABLE CONDITIONS, NON-VEGETATIVE MEANS OF PERMANENT GROUND STABILIZATION WILL BE EMPLOYED (I.E. EROSION CONTROL FABRIC, RIP-RAP, ETC.).
4. THE CONTRACTOR IS RESPONSIBLE FOR OBTAINING NPDES COVERAGE FOR THE PROPOSED CONSTRUCTION AREA, INCLUDING DEVELOPMENT OF THE NOTICE OF INTENT, STORM WATER POLLUTION PROTECTION PLAN DOCUMENTS, AND PERMIT APPLICATION FEE.
5. THE CONTRACTOR MUST MAKE REGULAR INSPECTIONS OF ALL CONTROL MEASURES THROUGHOUT THE CONSTRUCTION PROCESS TO ENSURE THE OVERALL EFFECTIVENESS OF THE EROSION AND SEDIMENT CONTROL PLAN. AT A MINIMUM, INSPECTIONS WILL OCCUR AT LEAST ONCE A WEEK AND WITHIN TWENTY-FOUR (24) HOURS OF THE END OF A STORM EVENT THAT IS ONE-HALF (0.50) INCH OR GREATER. ALL INSPECTIONS WILL BE DOCUMENTED.
6. IN THE EVENT THAT AN ON-SITE INSPECTION BY ANY PARTY REVEALS A DEFICIENCY IN THE INSTALLATION AND/OR MAINTENANCE OF EROSION AND SEDIMENT CONTROL MEASURES, THE CONTRACTOR WILL BE RESPONSIBLE FOR THE IMMEDIATE REMEDIATION OF THE PROBLEM AT NO ADDITIONAL COST TO THE OWNER.
7. NO CHANGE ORDERS WILL BE ACCEPTED PERTAINING TO REPAIR OR REMEDIATION OF THE EROSION CONTROL MEASURES OUTLINED IN BASE BID.
8. FAILURE TO COMPLY WITH THE REQUIRED EROSION AND SEDIMENT CONTROL GUIDELINES MAY RESULT IN FINES LEVIED BY GOVERNMENTAL AGENCIES. ANY FINES SUFFERED DUE TO NON-COMPLIANCE WILL BECOME THE RESPONSIBILITY OF THE CONTRACTOR.

SEQUENCE OF EROSION AND SEDIMENT CONTROL MEASURES IMPLEMENTATION SITE PREPARATION

1. PRIOR TO ANY SOIL DISTURBANCE, SILT FENCE MUST BE INSTALLED ALONG ENTIRE DOWN-GRADE PERIMETER OF PLANNED DISTURBANCE AS SHOWN IN PLANS AND DETAILS, OR BY EQUIVALENT MEASURES. SILT FENCE MUST REMAIN IN PLACE UNTIL ALL UP-GRADE AREAS OF DISTURBANCE HAVE BEEN PERMANENTLY STABILIZED.
2. A STABILIZED CONSTRUCTION ACCESS MUST BE ESTABLISHED AT ALL POINTS OF INGRESS/EGRESS FROM THE CONSTRUCTION SITE. AT A MINIMUM, ACCESS MUST INCLUDE ROCK INSTALLED ON TOP OF ENGINEERING FABRIC AS DETAILED IN THE PLANS. IF THIS MINIMUM ACCEPTABLE MEASURE DOES NOT COMPLETELY PREVENT OFFSITE TRACKING OF SOILS FROM THE CONSTRUCTION SITE, CONTRACTOR MUST SUPPLEMENT ADDITIONAL MEASURES SUCH AS INCREASING THE LENGTH OF THE ROCK ACCESS, ADDING A MANUAL HOSE WASHDOWN STATION, OR OTHER SIMILAR MEASURES. COSTS OF ANY AND ALL MEASURES NECESSARY TO PREVENT OFFSITE TRACKING OF SOILS MUST BE INCLUDED IN THE CONTRACTOR'S BASE BID AND ANY SUPPLEMENTAL MEASURES MUST BE PROVIDED AT NO ADDITIONAL EXPENSE TO THE OWNER. CONTRACTOR MUST ALSO INCLUDE IN THE BASE BID ALL COSTS ASSOCIATED WITH ONGOING MAINTENANCE AND REHAB OF ACCESS POINTS THROUGHOUT CONSTRUCTION AND THE REMOVAL OF ACCESS AND STABILIZATION OF THE ACCESS POINTS AFTER CONSTRUCTION OPERATIONS HAVE CEASED. ANY SOILS THAT ARE TRACKED OR OTHERWISE CARRIED OFFSITE MUST BE IMMEDIATELY REMOVED FROM ROADS AND DRAINAGE SYSTEMS, AND ALL COSTS FOR SUCH CLEANUP ARE THE RESPONSIBILITY OF THE CONTRACTOR.

CLEARING AND GRUBBING

1. ALL DISTURBED AREAS THAT WILL BE LEFT EXPOSED FOR MORE THAN FOURTEEN (14) DAYS AND ARE NOT SUBJECT TO CONSTRUCTION TRAFFIC MUST RECEIVE A TEMPORARY SEEDING IMMEDIATELY UPON DISTURBANCE. IF THE SEASON PREVENTS ESTABLISHMENT OF A TEMPORARY COVER, THE DISTURBED AREA WILL BE MULCHED WITH STRAW, OR EQUIVALENT MATERIAL, AT A RATE OF TWO (2) TONS PER ACRE.
2. ALL DISTURBED AREAS THAT ARE SUBJECT TO HIGH AMOUNTS OF EROSION (I.E. STEEP SLOPES, EMBANKMENTS GREATER THAN 3:1, OR OTHER AS DICTATED BY SITE CONDITIONS) MUST IMMEDIATELY RECEIVE A TEMPORARY SEEDING IN COMBINATION WITH MULCHING WITH STRAW, OR EQUIVALENT MATERIAL, AT A THICKNESS OF TWO (2) TO FOUR (4) INCHES MIXED WITH THE TOP TWO (2) INCHES OF SOIL.
3. ALL DISTURBED AREAS MUST, AS A MINIMUM, BE MAINTAINED BY WATER TO MINIMIZE THE GENERATION OF DUST.

GENERAL NOTES FOR EROSION AND SEDIMENT CONTROL (CONT'D)

SITE GRADING

1. THE SITE MUST, AT ALL TIMES, BE GRADED AND MAINTAINED SUCH THAT ALL STORM WATER RUNOFF IS CONTROLLED BY EROSION AND SEDIMENT CONTROL MEASURES.
2. ALL AREAS USED FOR MATERIAL STOCKPILE, BE IT FILL/EXCAVATED MATERIALS, STONE, OR OTHERWISE, MUST BE STABILIZED, AND MUST HAVE SILT FENCE INSTALLED PER THE DETAILS PROVIDED IN THE PLANS, OR BY EQUIVALENT MEASURES, AROUND THEIR ENTIRE DOWNGRADE PERIMETER.
3. PRIOR TO PROCEEDING WITH CONSTRUCTION, ALL TOPSOIL AND VEGETATION, TREES AND ASSOCIATED ROOT SYSTEMS, AND ANY OTHER DELETERIOUS NON-SOIL MATERIALS FOUND TO BE PRESENT SHOULD BE STRIPPED FROM THE PROPOSED CONSTRUCTION AREAS. CLEAN TOPSOIL SHALL BE STOCKPILED AND SUBSEQUENTLY RE-USED IN LANDSCAPED AREAS. DEBRIS-LADEN MATERIALS SHOULD BE EXCAVATED, TRANSPORTED, AND DISPOSED OF OFF-SITE IN ACCORDANCE WITH APPROPRIATE SOLID WASTE RULES AND REGULATIONS.

FINAL SITE WORK

1. PERMANENT SOD MUST BE INSTALLED ON ALL EXPOSED AREAS WITHIN THREE (3) DAYS AFTER FINAL GRADING.
2. UPON COMPLETION OF DEMOLITION, BUT PRIOR TO FINAL ACCEPTANCE, ALL DEMOLITION WASTE AND DEBRIS MUST BE REMOVED FROM THE SITE AND ALL PAVED ROADWAYS AND/OR PARKING AREAS WILL BE SWEPT CLEAN OF ALL SEDIMENT.
3. TEMPORARY EROSION AND SEDIMENT CONTROL MEASURES MUST REMAIN IN PLACE AND BE MAINTAINED UNTIL SUCH TIME WHEN ALL UP-GRADE AREAS HAVE BEEN PERMANENTLY STABILIZED.

DEMOLITION NOTES

1. CONTRACTOR SHALL OBTAIN NECESSARY PERMITS AND LICENSES FOR PERFORMING THE DEMOLITION WORK AND SHALL FURNISH A COPY OF SAME TO THE ENGINEER PRIOR TO COMMENCING THE WORK. THE CONTRACTOR SHALL COMPLY WITH THE REQUIREMENTS OF THE PERMITS.
2. NO WORK WITHIN THE RIGHT-OF-WAY IS AUTHORIZED UNTIL A RIGHT-OF-WAY PERMIT IS OBTAINED.
3. DEMOLITION AREAS SHOWN ON THIS PLAN ARE NOT PHASED, BUT SHOWN IN THEIR ENTIRETY.
4. THE CONTRACTOR SHALL NOTIFY ALL UTILITY COMPANIES OR LOCAL AUTHORITIES FURNISHING GAS, WATER, ELECTRICAL, TELEPHONE, OR SEWER SERVICE SO THEY CAN REMOVE, RELOCATE, DISCONNECT, CAP OR PLUG THEIR EQUIPMENT IN ORDER TO FACILITATE DEMOLITION.
5. CONTRACTOR SHALL PROTECT ALL UTILITIES AND OTHER IMPROVEMENTS SHOWN ON THESE PLANS AND UTILITIES AND OTHER IMPROVEMENTS NOT SHOWN. CONTRACTOR SHALL ASSUME RESPONSIBILITY FOR REPAIRS OF UTILITIES AND OTHER IMPROVEMENTS DAMAGED DURING CONSTRUCTION AND SHALL MAINTAIN SUFFICIENT PROTECTION FOR ALL UTILITIES REQUIRED TO PROTECT THEM FROM DAMAGE AND TO PROTECT THE PUBLIC DURING CONSTRUCTION. CONTRACTOR SHALL ALSO SUPPORT EXISTING UTILITIES AS REQUIRED FOR INSTALLATION OF ALL PROPOSED IMPROVEMENTS. ALL COSTS ASSOCIATED WITH PROTECTING, SUPPORTING, REPAIRING, AND OTHER ACTIVITIES RESULTING FROM CONTRACTOR DAMAGING UTILITIES SHALL BE THE CONTRACTORS RESPONSIBILITY AT NO ADDITIONAL COST TO THE OWNER OR LOCAL UTILITY.
6. CONTRACTOR IS RESPONSIBLE FOR THE PROTECTION OF ALL TREES, STRUCTURES, AND UTILITIES NOT MARKED FOR REMOVAL OR DEMOLITION AND SHALL PROMPTLY REPAIR ANY DAMAGE AS DIRECTED BY THE ENGINEER AT NO COST TO THE OWNER. TREES NOT MARKED FOR REMOVAL SHALL BE PROTECTED IN ACCORDANCE WITH FDOT PLAN NO. 580-001 TREE PROTECTION BARRICADE.
7. CONTRACTOR SHALL CLEAR AND GRUB THE SITE AS NECESSARY TO CONSTRUCT PROPOSED IMPROVEMENTS. REMOVE TREES MARKED FOR REMOVAL WHICH INCLUDES THE ROOTS ASSOCIATED WITH THE TREE.
8. ALL UNSUITABLE MATERIALS, INCLUDING ORGANICS AND MUCK, MUST BE EXCAVATED AND REMOVED FROM THE SITE AND REPLACED WITH CLEAN SAND PRIOR TO GRADING THE SITE.
9. CONTRACTOR SHALL TAKE PROPER MEASURES TO ENSURE EXCAVATED OR UNSALVAGEABLE MATERIAL STORED ON-SITE ARE PROTECTED AGAINST EROSION AND SEDIMENTATION. CONTRACTOR SHALL REMOVE UNSALVAGEABLE MATERIALS AND YARD WASTE FROM THE SITE IN A TIMELY MANNER AND DISPOSE OF IN ACCORDANCE WITH APPLICABLE FEDERAL, STATE, AND LOCAL REGULATIONS.
10. UNLESS OTHERWISE NOTED, ALL DEMOLISHED MATERIALS (PAVING, CURB, UTILITY PIPE, ETC.) SHALL BE REMOVED AND DISPOSED OF OFF SITE. NOTHING IDENTIFIED FOR DEMOLITION SHALL BE ABANDONED IN PLACE.
11. CONTRACTOR SHALL SAW-CUT A SMOOTH STRAIGHT EDGE ON ANY PAVEMENT PROPOSED FOR DEMOLITION PRIOR TO ITS REMOVAL. PRIOR TO CONNECTING PROPOSED PAVEMENT TO EXISTING PAVEMENT, THE CONTRACTOR SHALL ENSURE THAT THE EDGE OF THE EXISTING PAVEMENT IS STRAIGHT AND UNIFORM.
12. FULL DEPTH PAVEMENT SECTION REMOVAL INCLUDES ANY ASSOCIATED ASPHALT OR CONCRETE PAVEMENT, BASE MATERIAL, AND COMPACTED SUBGRADE TO A DEPTH TO REACH OF NATURAL SOIL.

EARTHWORK, GRADING, AND STABILIZATION NOTES

1. INFORMATION CONCERNING SITE SOIL CONDITIONS WILL BE PROVIDED BY THE GEOTECH REPORT.
2. ALL ON-SITE AREAS DISTURBED BY THE CONSTRUCTION SHALL BE STABILIZED IN ACCORDANCE WITH LANDSCAPE PLANS OR WITH SOD (SAME AS SURROUNDING AREA OR BETTER) OR APPROVED EQUAL.
3. ALL DEWATERING COSTS ASSOCIATED WITH THE PERMITTING, INSTALLATION, MAINTENANCE, AND CONSTRUCTION OF THE UNDERGROUND UTILITIES; STORM WATER PIPES AND MANHOLES; SANITARY SEWER MAINS, FORCE MAINS, MANHOLES, AND LIFT STATIONS; AND STORM WATER MANAGEMENT SYSTEMS SHALL BE INCLUDED AS PART OF THE CONSTRUCTION BID COSTS. THE CONTRACTOR SHALL SUBMIT FOR WATER USE PERMITS IF REQUIRED FOR DEWATERING ACTIVITIES.
4. UNLESS SHOWN OTHERWISE ON THE PLANS, CONTRACTOR SHALL APPLY 4" OF TOP SOIL TO ALL DISTURBED AREAS OF THE SITE, PLANT GLASS SEED OR SOD, APPLY STRAW, AND WATER. IT IS THE RESPONSIBILITY OF THE CONTRACTOR TO ESTABLISH A HEALTHY STAND OF GRASS ON ALL SEEDED OR SODDED AREAS. IF A HEALTHY STAND OF GRASS CAN NOT BE ESTABLISHED BY THE TIME THE BUILDING BECOMES OCCUPIED, THEN SOD SHALL BE INSTALLED AND WATERED UNTIL GRASS IS ESTABLISHED.
5. CONTRACTOR SHALL TAKE ALL MEASURES NECESSARY TO CONTROL TURBIDITY AND SEDIMENT INCLUDING, BUT NOT LIMITED TO, THE INSTALLATION OF TURBIDITY BARRIERS AND SILT FENCES AT ALL LOCATIONS WHERE THE POSSIBILITY OF TRANSFERRING SUSPENDED SOLIDS OFF-SITE EXISTS DUE TO THE PROPOSED WORK. TURBIDITY AND SEDIMENT BARRIERS MUST BE INSTALLED PRIOR TO THE COMMENCEMENT OF CONSTRUCTION AND MAINTAINED AT ALL LOCATIONS UNTIL CONSTRUCTION IS COMPLETED AND DISTURBED SOIL AREAS ARE STABILIZED. THE CONTRACTOR SHALL ALSO BE RESPONSIBLE FOR REMOVING THE BARRIERS. AT NO TIME SHALL THERE BE ANY OFFSITE DISCHARGE WHICH VIOLATES THE WATER QUALITY STANDARDS IN CHAPTERS 62-302 AND 62-4, FAC.

PAVING, GRADING, AND DRAINAGE NOTES

1. ALL CURBS (EXISTING OR NEW) SHALL BE PROTECTED FROM CONSTRUCTION DAMAGE. ALL CHIPPED OR CRACKED PORTIONS OF CURB SHALL BE REPLACED AT CONTRACTOR'S EXPENSE. IN ADDITION, ANY MORTAR, CONCRETE, SOIL AND OTHER DEPOSITS OR STAINS SHALL BE CLEANED TO RETURN THE CURBS TO THEIR ORIGINAL CONDITION.
2. UPON COMPLETION OF FINAL ASPHALT PAVING, TOOL AND CLEAN ALL MANHOLE AND VALVE COVERS OF DIRT, DEBRIS AND ASPHALT. ALL MANHOLE AND VALVE COVERS SHALL BE CLEAN AND OPERABLE PRIOR TO OWNER'S ACCEPTANCE.
3. IN ADDITION TO THE REQUIREMENTS IN THE ENGINEER'S TECHNICAL SPECIFICATIONS, ALL ROADWAY CONSTRUCTION SHALL BE COMPLETED IN ACCORDANCE WITH APPLICABLE STATE OR LOCAL GOVERNMENT SPECIFICATIONS.
4. CONTRACTOR TO PROVIDE MOT PLAN FOR REVIEW AND APPROVAL TO THE APPLICABLE STATE OR LOCAL GOVERNMENT PRIOR TO WORK IN THE RIGHT-OF-WAY. CONTRACTOR SHALL EXECUTE AND IMPLEMENT THE MOT PLAN IN ACCORDANCE WITH FDOT STANDARDS.
5. STABILIZED SUBGRADE TO BE FDOT TYPE "B".
6. ALL CONCRETE STRUCTURES, SUCH AS, BUT NOT LIMITED TO: FLUMES, WALKS, CURBS AND DRAINAGE STRUCTURES, SHALL BE TO FDOT STANDARD SPECIFICATIONS (LATEST EDITION).
7. COMPLETE CONSTRUCTION WITHOUT IMPACTING THE NORMAL OPERATION OF PEDESTRIAN AND VEHICULAR TRAFFIC.
8. THE EXISTING GRADES SHOWN ON THE DRAWINGS (IN PLAN OR IN SECTION) ARE APPROXIMATE ONLY. THE CONTRACTOR IS RESPONSIBLE FOR GRADING, INCLUDING PLACEMENT OR REMOVAL OF FILL MATERIAL AS APPROPRIATE, TO PROVIDE PROPER RELATIONSHIP BETWEEN WALKS/RAMPS AND ADJACENT ROADWAYS, CURBS, LOTS, UTILITIES, AND OTHER APPURTENANCES, AS INDICATED.
9. CONTRACTOR SHALL COORDINATE WITH APPROPRIATE UTILITY PROVIDER FOR THE ADJUSTMENT OF ANY EXISTING OR PROPOSED UTILITY BOXES OR COVERS SHOWN ON THE DRAWINGS.
10. CONTRACTOR SHALL MAINTAIN CLEAR, SAFE WALKWAYS AND WALKING DETOURS FOR NORMAL PEDESTRIAN AND GUEST TRAFFIC AT ALL TIMES DURING CONSTRUCTION. CONTRACTOR IS RESPONSIBLE FOR PEDESTRIAN AND GUEST MOT PLANS.
11. CONTRACTOR SHALL PROVIDE POSITIVE DRAINAGE AWAY FROM ALL BUILDINGS.
12. ON-SITE STORMWATER MANAGEMENT AND DRAINAGE SYSTEM WILL BE PRIVATELY OWNED AND MAINTAINED.
13. ALL PIPES SHALL HAVE 3-FEET MINIMUM COVER UNLESS OTHERWISE SPECIFIED IN PLANS, CONTRACTOR SHALL TAKE CARE TO PROVIDE PROPER GRADE ELEVATIONS AND ALIGNMENTS.
14. ALL STORM DRAINAGE INLETS AND PIPES SHALL BE PROTECTED FROM SILT, SAND AND DEBRIS DURING CONSTRUCTION. ANY ACCUMULATION WITHIN THE STORM DRAINAGE PIPE SYSTEM SHALL BE REMOVED WITHOUT PUMPING OR FLUSHING INTO THE PONDS. STORM DRAINAGE SYSTEM SHALL BE CLEANED AND FREE OF DEBRIS PRIOR TO CONSTRUCTION MANAGER'S ACCEPTANCE.
15. ALL DRAINAGE PIPE JOINTS TO BE WRAPPED WITH FILTER FABRIC CLOTH PER FDOT PLAN 430-001.
16. ALL DRAINAGE STRUCTURES (EXISTING AND PROPOSED) SHALL REMAIN CLEAR OF SILT, SAND, AND DEBRIS. PRIOR TO FINAL CERTIFICATION BY THE EOR, THE CONTRACTOR SHALL SUBMIT INSPECTION OF THE STORMWATER CONVEYANCE SYSTEM FOR REVIEW.

GENERAL UTILITY NOTES

1. ALL UTILITY WORK SHALL CONFORM TO AND SHALL BE INSTALLED, TESTED AND CLEARED FOR SERVICE IN ACCORDANCE WITH THE WORK SHALL ALSO CONFORM TO THE APPROVED PROJECT SPECIFICATIONS, LOCAL UTILITY SPECIFICATIONS, AND/OR FDEP PERMIT.
2. PROTECT THE UTILITY SYSTEMS AT ALL TIMES DURING CONSTRUCTION. SHOULD A SYSTEM BECOME DAMAGED, ALTERED OR EXTENDED AFTER THE INITIAL TESTING, THE AFFECTED PORTION OF THE SYSTEM SHALL BE RESTORED AS NECESSARY AND RETESTED IN ACCORDANCE WITH THE PROJECT SPECIFICATIONS.
3. ALL POTABLE WATER MAINS MUST BEAR "NSF" "PW" LOGO.
4. UNDERGROUND FIRE LINES SHALL MEET NFPA 24 REQUIREMENTS.
5. ALL UNDERGROUND UTILITIES MUST BE INSTALLED, SURVEYED, AND AS-BUILTS APPROVED BEFORE THE ROADWAY BASE AND SURFACE ARE CONSTRUCTED.
6. ALL UNDERGROUND UTILITY PIPING SHALL HAVE A MINIMUM OF 3-FEET OF COVER UNLESS SHOWN OTHERWISE ON THE PLANS OR AS DIRECTED BY THE ENGINEER.
7. ALL RIGHT-OF-WAY INSTALLATIONS WILL BE IN ACCORDANCE WITH PRACTICES REFERENCED IN THE STATE OF FLORIDA UTILITIES ACCOMMODATION MANUAL.
8. CONTRACTOR TO COORDINATE WITH LOCAL UTILITY COMPANIES PRIOR TO ANY CONSTRUCTION ACTIVITY FOR UTILITY LOCATE TICKETS, ELECTRICAL PERMITS OR OTHER PERMITS AS APPLICABLE. CONTRACTOR IS TO COORDINATE FULLY WITH LOCAL UTILITY COMPANIES ON EXACT LOCATION OF UNDERGROUND UTILITIES PRIOR TO EXCAVATION. THE UTILITY COMPANIES LISTED IN THE TABLE BELOW SHALL BE CONTACTED BY THE CONTRACTOR AT LEAST 3 FULL WORK DAYS IN ADVANCE.
9. LOCATIONS OF ALL EXISTING UTILITIES AND STORM DRAINAGE SHOWN ON THE PLANS HAVE BEEN DETERMINED FROM AVAILABLE INFORMATION AND ARE GIVEN FOR THE CONVENIENCE OF THE CONTRACTOR. THE OWNER OR ENGINEER ASSUMES NO RESPONSIBILITY FOR ACCURACY. PRIOR TO THE START OF CONSTRUCTION, IT SHALL BE THE CONTRACTOR'S RESPONSIBILITY TO NOTIFY THE VARIOUS UTILITIES. THE CONTRACTOR SHALL EXERCISE CAUTION WHEN CROSSING ANY UNDERGROUND UTILITY. EXISTING UTILITIES WHICH INTERFERE WITH THE PROPOSED CONSTRUCTION SHALL BE RELOCATED AS DIRECTED ON THE PLANS.
10. ALL UTILITY LINES ARE TO BE CAPPED TEMPORARILY AT THEIR OPEN ENDS UNTIL CONNECTIONS ARE CONSTRUCTED.
11. ALL PROPERTY AFFECTED BY THIS WORK SHALL BE RESTORED TO A CONDITION EQUAL TO OR BETTER THAN EXISTED UNLESS SPECIFICALLY EXEMPTED BY THE PLANS. THE COST FOR SUCH RESTORATION SHALL BE INCIDENTAL TO OTHER CONSTRUCTION AND NO EXTRA COMPENSATION WILL BE ALLOWED.
12. A 48-HOUR NOTICE WILL BE GIVEN TO THE ENGINEER OF RECORD AND LOCAL UTILITY INSPECTORS PRIOR TO TESTING ANY UTILITY SHOWN ON THESE PLANS.
13. PROPOSED FIRE LINE PIPING FOR THE FIRE PROTECTION SYSTEM, INCLUDING BACKFLOW PREVENTER SHALL BE INSTALLED BY A CLASS I, II, OR V CONTRACTOR PER CHAPTER 633.102 F.S. THE UNDERGROUND FIRE RISER SHALL EXTEND TO 1- FOOT ABOVE FINISH FLOOR (AFF) OR FINISH GRADE.

REV.NO.	DESCRIPTION	DATE

REVISIONS

MCKIM&CREED
1206 N. Palafox Street
Pensacola, Florida 32501
Phone: (850) 994-9503

CA Lic. No. 29588
www.mckimcreed.com

PACE FIRE STATION #4 ADDITION

GENERAL

GENERAL NOTES

ISSUE DATE:	2024-04-30
MCE PROJ. #	07615-0017
DRAWN	C.FELDMEYER
DESIGNED	C.FELDMEYER
CHECKED	A.MAINIERO
PROJ. MGR.	A.MAINIERO

SCALE
HORIZONTAL: AS SHOWN
VERTICAL: AS SHOWN

G-001
DRAWING NUMBER
REVISION

STATUS: BID SET

LEGEND

	FOUND 1/2" DIA CAPPED IRON ROD (NO. 5170)
	FOUND 1/2" DIA CAPPED IRON ROD (NO. 3454)
	SET BENCHMARK
(F)	FIELD
(PS)	PROVIDED SURVEY
—— O ——	CHAIN LINK FENCE
— - OU - —	OVERHEAD UTILITIES
— - W - —	BURIED WATER LINE
— - SD - —	STORMWATER LINE
	SURVEY LIMITS
——SWL——	SOLID WHITE PAINT LINE
	WATER METER
	WATER VALVE
	FIRE HYDRANT
	GAS MARKER
	GAS VENT
	GAS VALVE
	GUY WIRE ANCHOR
	WOOD UTILITY POLE
+ 6.00	SPOT ELEVATION
—— 100 ——	ELEVATION CONTOUR LINE
	CREPE MYTRLE

GENERAL NOTES (MCKIM & CREED, PROJECT NUMBER 07615-0018:

1. NORTH AND THE SURVEY DATUM SHOWN HEREON ARE BASED ON THE FLORIDA STATE PLANE COORDINATE SYSTEM (FLORIDA NORTH ZONE), NORTH AMERICAN DATUM OF 1983 (NAD83)-(2011)-(EPOCH 2010.0000) AND EXISTING FIELD MONUMENTATION.
2. ELEVATIONS AS SHOWN HEREON ARE REFERENCED TO THE NORTH AMERICAN VERTICAL DATUM OF 1988 (NAVD88) AND ARE BASED ON GPS OBSERVATIONS.
3. BOUNDARY INFORMATION AS SHOWN HEREON IS BASED ON A PREVIOUS SURVEY AS COMPLETED BY BENCHMARK SURVEYING AND LAND PLANNING, INC. DATED 7/22/14 AND HAVING A JOB NUMBER OF L14-498 1893.
4. MEASUREMENTS AS SHOWN HEREON WERE MADE TO UNITED STATES SURVEY FEET AND DECIMALS THEREOF.
5. VISIBLE UTILITIES WITHIN THE SURVEY LIMITS ARE AS SHOWN HERON.
6. VISIBLE IMPROVEMENTS ARE AS SHOWN HEREON.
7. IT IS THE OPINION OF THE UNDERSIGNED SURVEYOR & MAPPER THAT THE PARCEL OF LAND SHOWN HEREON IS IN ZONE "X", AREAS DETERMINED TO BE OUTSIDE THE 0.2% ANNUAL CHANCE FLOODPLAIN, BASED ON THE FEDERAL EMERGENCY MANAGEMENT AGENCY FLOOD INSURANCE RATE MAP FOR SANTA ROSA COUNTY, FLORIDA, COMMUNITY PANEL NUMBER 12113C0285H, EFFECTIVE DATE OF NOVEMBER 19, 2021.
8. GRAPHIC SYMBOLISM FOR FEATURES SUCH AS MONUMENTATION, FENCES, TREES, UTILITIES ETCETERA MAY BE EXAGGERATED IN SIZE FOR CLARITY PURPOSES. DIMENSIONS TO EXAGGERATED FEATURES WILL SUPERSEDE SCALED MEASUREMENTS.
9. NO TITLE SEARCH WAS PERFORMED BY NOR PROVIDED TO THIS FIRM FOR THE SUBJECT PROPERTY. THERE MAY BE DEEDS OF RECORD, UNRECORDED DEEDS, EASEMENTS, RIGHTS-OF-WAY, BUILDING SETBACKS, RESTRICTIVE COVENANTS OR OTHER INSTRUMENTS WHICH COULD AFFECT THE BOUNDARIES OR USE OF THE SUBJECT PROPERTY.
10. THE SURVEYING BUSINESS CERTIFICATE OF AUTHORIZATION NUMBER FOR McKIM & CREED, INC. IS LB7917.
11. THIS SURVEY DOES NOT REPRESENT NOR GUARANTEE OWNERSHIP.
12. THE FIELD SURVEY SHOWN HEREON WAS PERFORMED IN NOVEMBER-DECEMBER 2021, AND RECORDED IN FIELD BOOK RG26, PAGE 72 AND FIELD BOOK RG28, PAGES 18-44.

N

20' 0 20' 40'

REV NO.	DESCRIPTION	DATE

REVISIONS

McKIM&CREED
1206 N. Palafox Street
Pensacola, Florida 32501
Phone: (850) 994-9503
CA Lic. No. 29588
www.mckimcreed.com

PACE FIRE STATION #4 ADDITION

CIVIL

EXISTING CONDITIONS

ISSUE DATE:	2024-04-30
MCE PROJ. #	07615-0017
DRAWN	C.FELDMEYER
DESIGNED	C.FELDMEYER
CHECKED	A.MAINIERO
PROJ. MGR.	A.MAINIERO

SCALE
HORIZONTAL: AS SHOWN
VERTICAL: AS SHOWN

C-000
DRAWING NUMBER

REVISION

STATUS: BID SET

I:\07615\0017\ENG\80-DRAWINGS\CIVIL\C-000 - EXISTING CONDITIONS.DWG 05/03/2024 13:16:47 ALEX MAINIERO

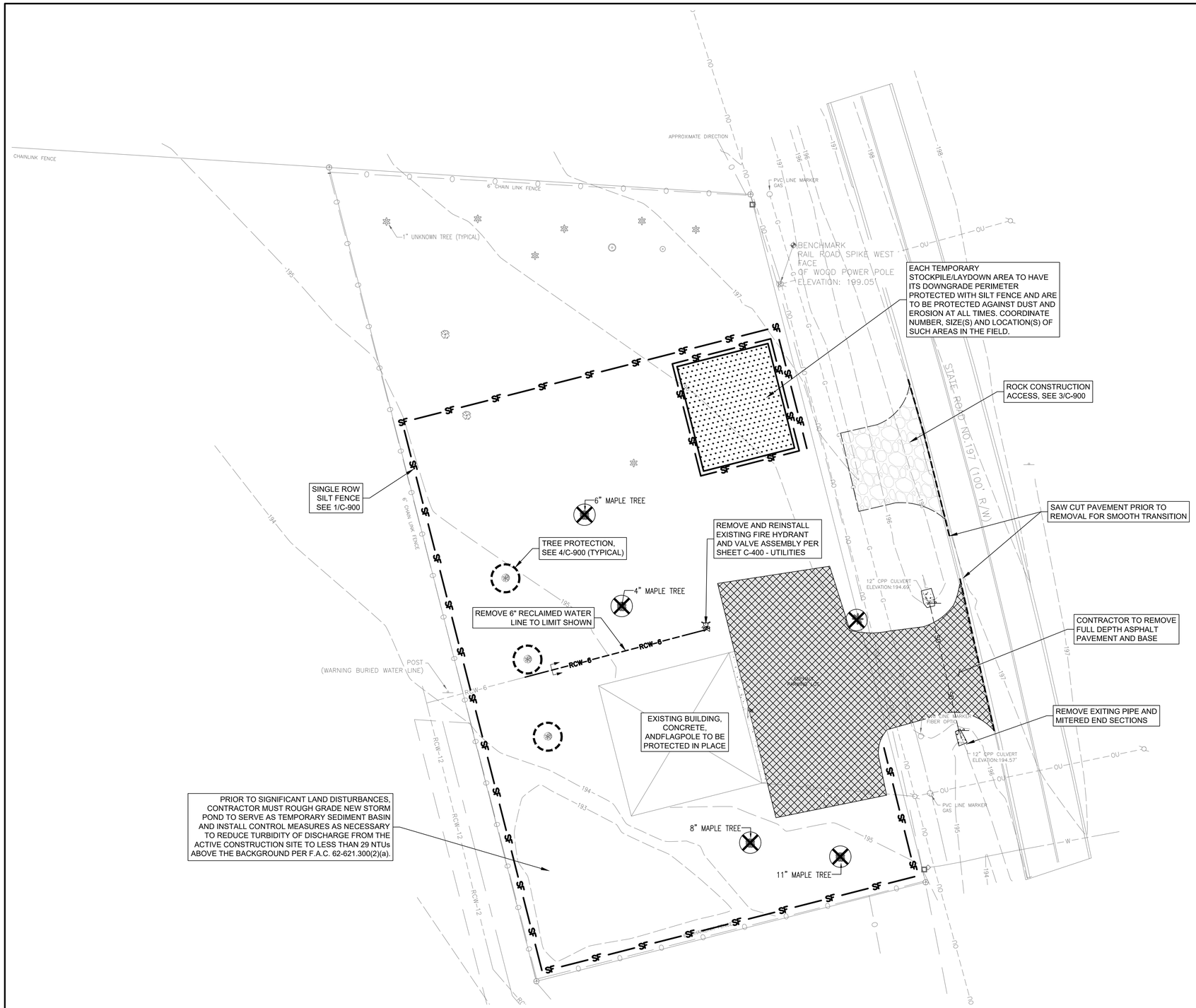

LEGEND

- ½" CAPPED IRON ROD
- BENCHMARK IN VICINITY
- R/W RIGHT OF WAY
- WATER VALVE
- WATER METER
- FIRE HYDRANT
- UTILITY POLE
- SIGN
- WOODEN POST
- PROPERTY BOUNDARY
- SAWCUT LINE
- SF SILT FENCE SINGLE ROW
- TREE TO BE PROTECTED
- TREE TO BE REMOVED
- OU OVERHEAD UTILITY LINE
- G GAS LINE
- CHAINLINK FENCE LINE
- W WATER LINE
- CONSTRUCTION ENTRANCE
- ASPHALT PVMT SECTION REMOVED
- STORAGE/LAYDOWN AREA

REV. NO.	DESCRIPTION	DATE

REVISIONS

McKIM&CREED
1206 N. Palafox Street
Pensacola, Florida 32501
Phone: (850) 994-9503

CA Lic. No. 29588
www.mckimcreed.com

PACE FIRE STATION #4 ADDITION

CIVIL

DEMOLITION & EROSION CONTROL

ISSUE DATE:	2024-04-30
MCE PROJ. #	07615-0017
DRAWN	C.FELDMEYER
DESIGNED	C.FELDMEYER
CHECKED	A.MAINIERO
PROJ. MGR.	A.MAINIERO

SCALE
HORIZONTAL: AS SHOWN
VERTICAL: AS SHOWN

C-100
DRAWING NUMBER
REVISION

STATUS: BID SET

I:\07615\0017\ENG\80-DRAWINGS\CIVIL\C-100 - DEMO & EROSION CONTROL.DWG 05/03/2024 13:17:02 ALEX MAINIERO

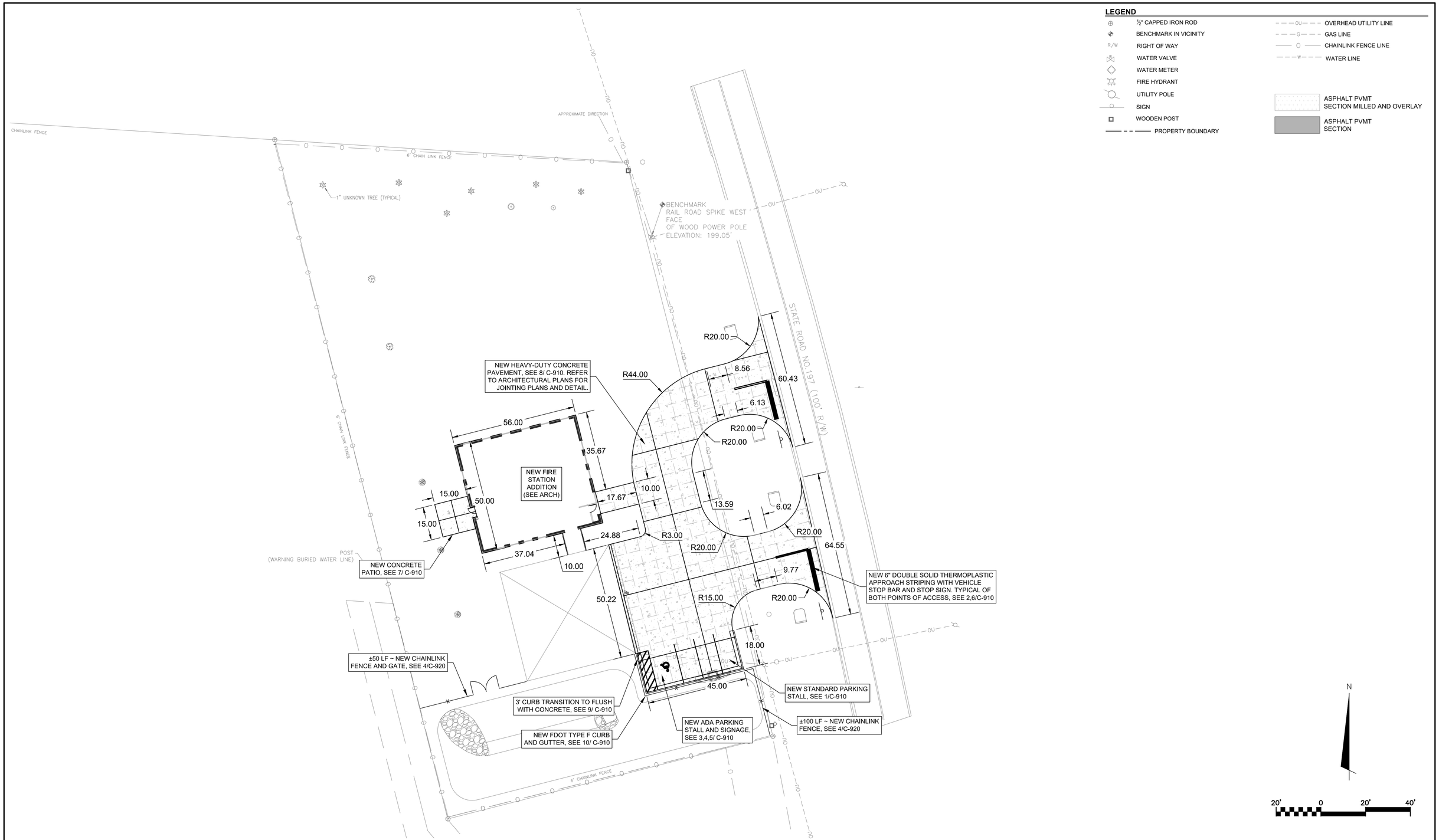

REV.NO.	DESCRIPTION	DATE

REVISIONS

McKIM&CREED
1206 N. Palafox Street
Pensacola, Florida 32501
Phone: (850) 994-9503

CA Lic. No. 29588
www.mckimcreed.com

PACE FIRE STATION #4 ADDITION

CIVIL

SITE IMPROVEMENTS & DIMENSIONING

ISSUE DATE:	2024-04-30
MCE PROJ. #	07615-0017
DRAWN	C.FELDMEYER
DESIGNED	C.FELDMEYER
CHECKED	A.MAINIERO
PROJ. MGR.	A.MAINIERO

SCALE
HORIZONTAL: AS SHOWN
VERTICAL: AS SHOWN

C-200
DRAWING NUMBER

REVISION

STATUS: BID SET

I:\07615\0017\ENG\80-DRAWINGS\CIVIL\C-200 – SITE IMPROVEMENTS & DIMENSIONING.DWG 05/03/2024 13:17:15 ALEX MAINIERO

LEGEND

- ½" CAPPED IRON ROD
- BENCHMARK IN VICINITY
- R/W — RIGHT OF WAY
- WATER VALVE
- WATER METER
- FIRE HYDRANT
- UTILITY POLE
- SIGN
- WOODEN POST
- PROPERTY BOUNDARY
- OVERHEAD UTILITY LINE
- GAS LINE
- CHAINLINK FENCE LINE
- WATER LINE

GRADING NOTES

1. THE FOLLOWING ABBREVIATIONS APPLY
   - EP = EDGE OF CONCRETE PAVEMENT
   - MG = MATCH EXISTING GRADE
   - TC = TOP OF CURB
   - FL = FLOW LINE
   - FG = FINISHED GRADE

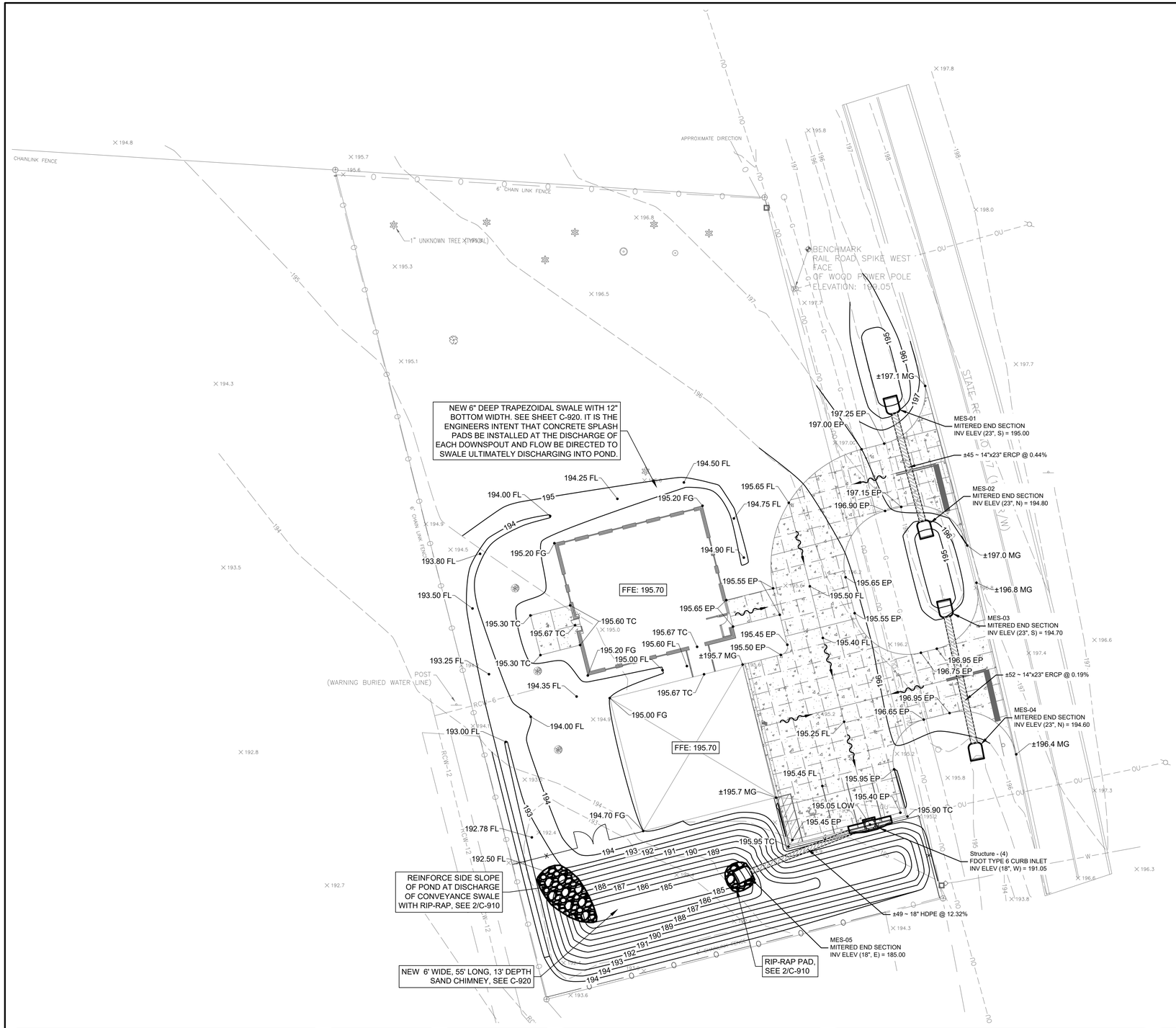

N

20' 0 20' 40'

REV.NO.	DESCRIPTION	DATE

REVISIONS

McKIM&CREED
1206 N. Palafox Street
Pensacola, Florida 32501
Phone: (850) 994-9503

CA Lic. No. 29588
www.mckimcreed.com

PACE FIRE STATION #4 ADDITION

CIVIL

GRADING & DRAINAGE

ISSUE DATE:	2024-04-30
MCE PROJ. #	07615-0017
DRAWN	C.FELDMEYER
DESIGNED	C.FELDMEYER
CHECKED	A.MAINIERO
PROJ. MGR.	A.MAINIERO

SCALE
HORIZONTAL: AS SHOWN
VERTICAL: AS SHOWN

C-300
DRAWING NUMBER

REVISION

STATUS: BID SET

LEGEND

- ½" CAPPED IRON ROD
- BENCHMARK IN VICINITY
- R/W RIGHT OF WAY
- WATER VALVE
- WATER METER
- FIRE HYDRANT
- UTILITY POLE
- SIGN
- WOODEN POST
- PROPERTY BOUNDARY
- OVERHEAD UTILITY LINE
- GAS LINE
- CHAINLINK FENCE LINE
- WATER LINE

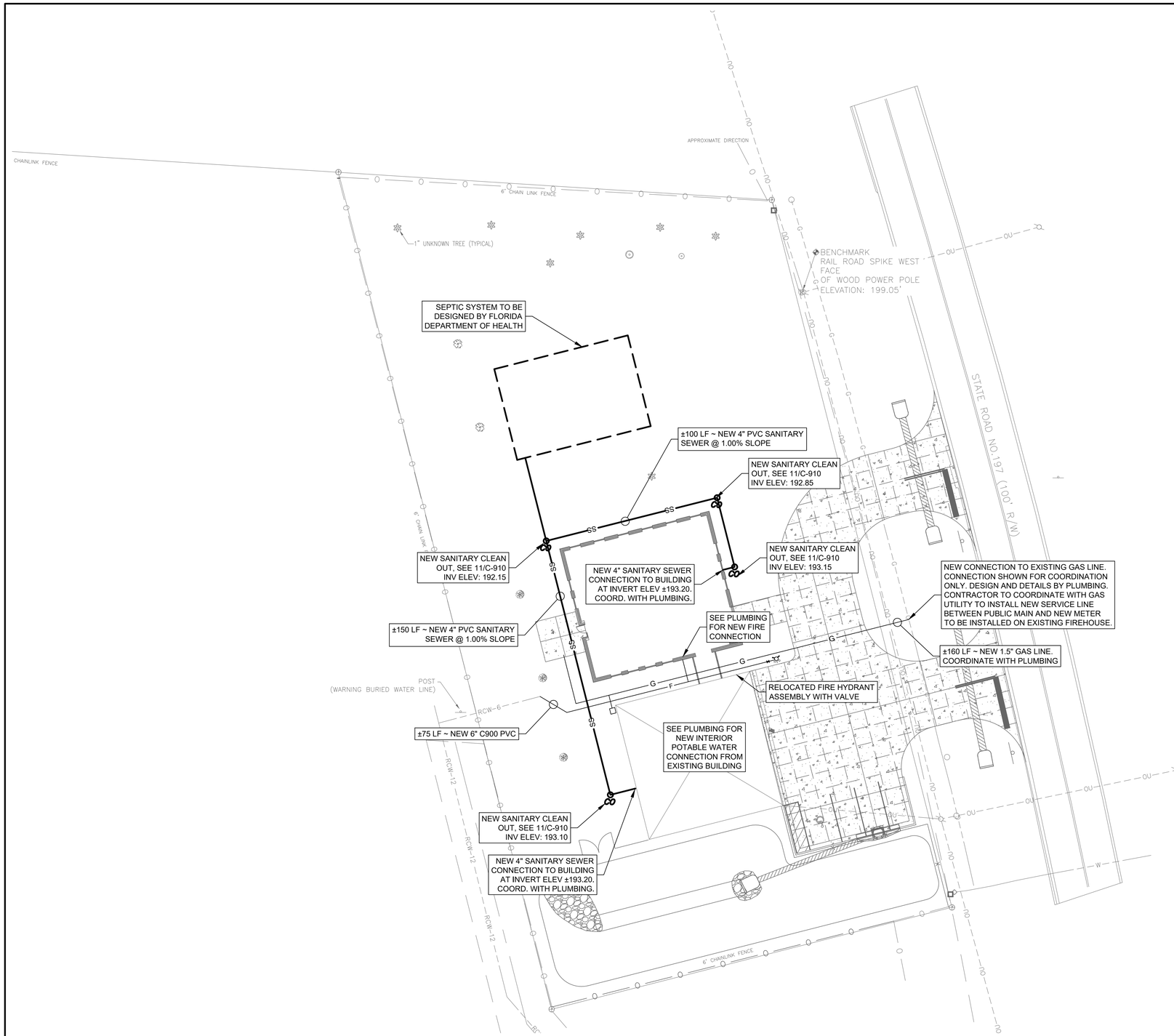

REV.NO.	DESCRIPTION	DATE

REVISIONS

McKIM&CREED
1206 N. Palafox Street
Pensacola, Florida 32501
Phone: (850) 994-9503

CA Lic. No. 29588
www.mckimcreed.com

PACE FIRE STATION #4 ADDITION

CIVIL

UTITLITIES

ISSUE DATE:	2024-04-30
MCE PROJ. #	07615-0017
DRAWN	C.FELDMEYER
DESIGNED	C.FELDMEYER
CHECKED	A.MAINIERO
PROJ. MGR.	A.MAINIERO

SCALE
HORIZONTAL: AS SHOWN
VERTICAL: AS SHOWN

C-400
DRAWING NUMBER

REVISION

STATUS: BID SET

I:\07615\0017\ENG\80-DRAWINGS\CIVIL\C-400 - UTILITIES.DWG 05/03/2024 13:17:46 ALEX MAINIERO

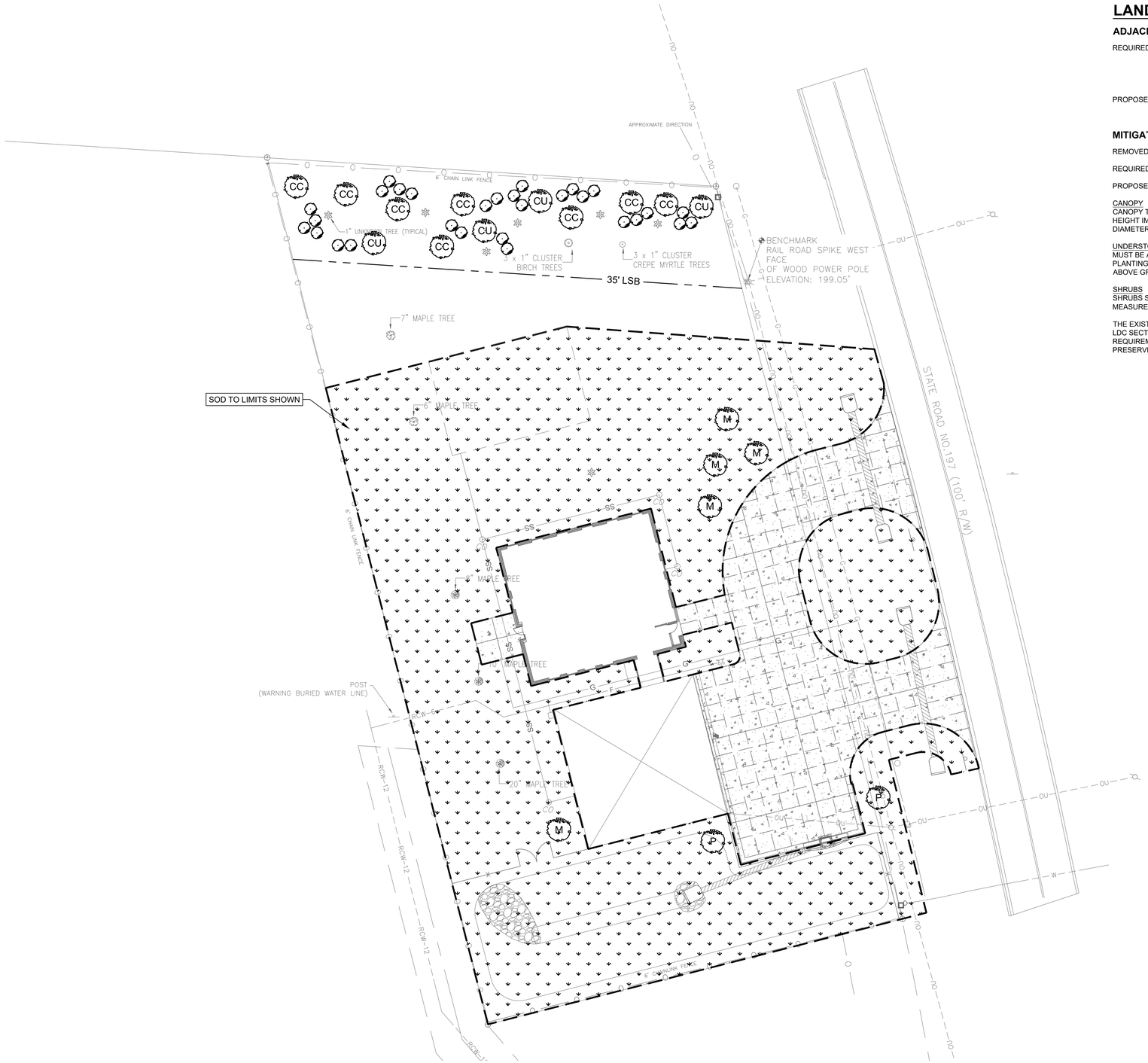

LANDSCAPE SUMMARY

ADJACENT USE LANDSCAPE BUFFER

REQUIRED — 150' NORTH BOUNDARY - 35' TYPE C BUFFER
PER 100' OF FRONTAGE:
4.8 CANOPY TREE
2.4 UNDERSTORY TREE
19 SHRUBS

PROPOSED — 8 CANOPY TREES
4 UNDERSTORY TREES
29 SHRUBS

MITIGATION TREES

REMOVED — FOUR (4) TREES, 4"-12" TREES

REQUIRED — 12" DBH

PROPOSED — FIVE (5) TREES, 2.5" DBH

CANOPY
CANOPY TREE SPECIES SHALL BE A MINIMUM OF EIGHT FEET OVERALL HEIGHT IMMEDIATELY AFTER PLANTING WITH AT LEAST A TWO INCH DIAMETER MEASURED AT 4.5 FEET ABOVE GRADE (DBH).

UNDERSTORY TREE
MUST BE A MINIMUM OF FOUR FEET OVERALL HEIGHT IMMEDIATELY AFTER PLANTING WITH AT LEAST A ONE INCH DIAMETER MEASURED AT 4.5 FEET ABOVE GRADE (DBH).

SHRUBS
SHRUBS SHALL BE A MINIMUM OF TWELVE (12) INCHES IN HEIGHT WHEN MEASURED IMMEDIATELY AFTER PLANTING.

THE EXISTING NATIVE VEGETATION MUST BE SAVED WHERE POSSIBLE PER LDC SECTIONS 4.07.02 AND 4.07.0.3 AND WILL COUNT TOWARDS BUFFER REQUIREMENTS. AN INSPECTION MUST BE REQUESTED TO VERIFY PRESERVED VEGETATION COUNTS MEET MINIMUM BUFFER REQ'S.

LEGEND

- ½" CAPPED IRON ROD
- BENCHMARK IN VICINITY
- R/W — RIGHT OF WAY
- WATER VALVE
- WATER METER
- FIRE HYDRANT
- UTILITY POLE
- SIGN
- WOODEN POST
- PROPERTY BOUNDARY
- OU — OVERHEAD UTILITY LINE
- G — GAS LINE
- O — CHAINLINK FENCE LINE
- W — WATER LINE
- M — MITIGATION TREE
- P — PARKING TERMINATION TREE
- CC — BUFFER C TREE (CANOPY)
- CU — BUFFER C TREE (UNDERSTORY)
- SHRUB

LANDSCAPE NOTES

1. THIS PLAN IS THE ENGINEER'S LANDSCAPING CONCEPT AND IS ONLY INTENDED TO BE A REPRESENTATION OF AN INSTALLATION THAT SATISFIES THE CRITERIA OF THE SANTA ROSA COUNTY LAND DEVELOPMENT CODE. THE OWNER MAY CHOOSE TO REVISE THIS LAYOUT TO BETTER SUIT THE INTENT OF THE SITE. PRIOR TO ANY LANDSCAPING OR IRRIGATION INSTALLATION, THE CONTRACTOR SHALL BE RESPONSIBLE FOR SUBMITTING ANY REVISIONS TO THIS LANDSCAPING PLAN TO SANTA ROSA COUNTY DEVELOPMENT SERVICES FOR FINAL APPROVAL. CONTRACTOR MUST COORDINATE WITH ARCHITECT FOR FINAL SPECIES DESIGNATION AND LOCATION OF ALL SITE PLANTINGS.
2. NO MORE THAN 50% OF THE REQUIRED LANDSCAPING MATERIAL MAY BE OF THE SAME SPECIES.
3. THE USE OF EXISTING NATIVE SPECIES OF PLANT MATERIAL IS REQUIRED IN LANDSCAPE BUFFERS WHEN POSSIBLE.
4. ALL EXPOSED DIRT SHALL BE STABILIZED WITH SOD, HYDRO-SEED OR HAY/SEED.
5. ALL EXISTING VEGETATION OUTSIDE THE IDENTIFIED DEVELOPMENT AREA WILL REMAIN INTACT. NO FUTURE DEVELOPMENT OF THE REMAINING PARCEL WILL OCCUR WITHOUT FORMAL REVIEW AND APPROVAL FROM SANTA ROSA COUNTY DEVELOPMENT SERVICES.
6. OWNER ACCEPTS WATERING/MAINTENANCE RESPONSIBILITY FOR THE REQUIRED LANDSCAPING.
7. CANOPY TREES SHOULD NOT BE PLANTED WITHIN TWENTY FEET (20') OF OVERHEAD UTILITY LINES. WHEN OVERHEAD UTILITY LINES ARE PRESENT, CANOPY TREES MAY BE SUBSTITUTED USING A MIXTURE OF UNDERSTORY TREES AND SHRUBS. UNDERSTORY TREES MAY BE SUBSTITUTED FOR TREES AT A RATIO OF TWO (2) TO ONE (1), AND SHRUBS MAY BE SUBSTITUTED FOR TREES AT A RATIO OF FOUR (4) TO ONE (1). SUBSTITUTED UNDERSTORY TREES MUST MAINTAIN A MINIMUM CLEARANCE OF TEN (10) FEET FROM ANY OVERHEAD UTILITY. IN NO CASE SHALL THE SUBSTITUTED UNDERSTORY TREES BE A SPECIES THAT CAN REACH A MATURE HEIGHT TO EXCEED FIFTEEN (15) FEET.
8. WHEN, AS DETERMINED BY THE PLANNING DIRECTOR, OR THEIR DESIGNEE REQUIRED PERIMETER LANDSCAPING WOULD LIMIT THE VISIBILITY OF A BUSINESS, SHRUBS MAY BE SUBSTITUTED FOR TREES AT A RATIO OF FOUR (4) TO ONE (1).
9. ALL EXISTING NATIVE VEGETATION WITHIN THE BUFFER MUST BE SAVED AND PROTECTED DURING CONSTRUCTION OF THIS PROJECT TO THE GREATEST EXTENT POSSIBLE. ANY NATIVE CANOPY TREES WITHIN THE BUFFER AREA 2" DBH OR NATIVE UNDERSTORY TREES 1" DBH, AND ANY NATIVE SHRUBS CAN BE COUNTED TOWARD THE PLANTING REQUIREMENTS. COUNTY STAFF WILL INSPECT THE SITE TO VERIFY EXISTING VEGETATION COUNTS. PLEASE CONTACT THE COUNTY PLANNING AND ZONING OFFICE AFTER ALL SITE GRADING IS COMPLETE FOR A LANDSCAPE BUFFER INSPECTION. ADDITIONAL PLANTINGS MAY BE REQUIRED."

N

20' 0 20' 40'

REV NO.	DESCRIPTION	DATE

REVISIONS

McKIM&CREED
1206 N. Palafox Street
Pensacola, Florida 32501
Phone: (850) 994-9503

CA Lic. No. 29588
www.mckimcreed.com

PACE FIRE STATION #4 ADDITION

CIVIL

LANDSCAPING PLAN

ISSUE DATE:	2024-04-30
MCE PROJ. #	07615-0017
DRAWN	C.FELDMEYER
DESIGNED	C.FELDMEYER
CHECKED	A.MAINIERO
PROJ. MGR.	A.MAINIERO

SCALE
HORIZONTAL: AS SHOWN
VERTICAL: AS SHOWN

C-500
DRAWING NUMBER

REVISION

STATUS: BID SET

I:\07615\0017\ENG\80-DRAWINGS\CIVIL\C-500 - LANDSCAPING PLAN.DWG 05/03/2024 13:18:02 ALEX MAINIERO

1 SILT FENCE

N.T.S.

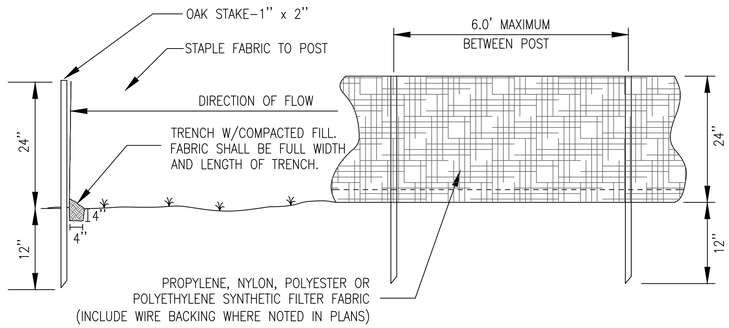

2 SODDING

N.T.S.

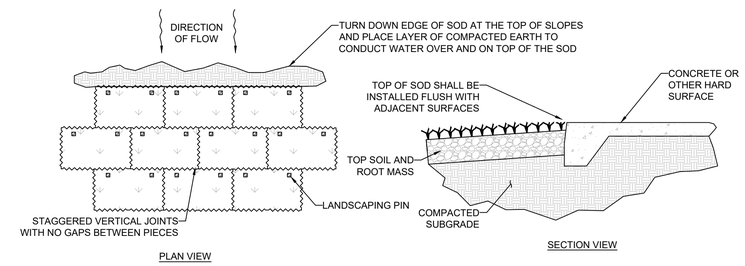

NOTES:

1. SEE WRITTEN SPECIFICATIONS FOR FULL DETAILS.
2. PLACE SOD BEGINNING AT THE TOE OF THE SLOPE AND LONG EDGE PERPENDICULAR TO DIRECTION OF FLOW.
3. SOD SHALL BE PINNED ON ALL SLOPES 4:1 OR STEEPER, IN AREAS OF CONCENTRATED DRAINAGE FLOWS, AND ANYWHERE THAT THERE IS DANGER OF SOD SLIPPING.
4. INSTALL SOD EDGES FLUSH WITH FINISHED GRADE OR ADJOINING SOD.

3 CONSTRUCTION ACCESS

N.T.S.

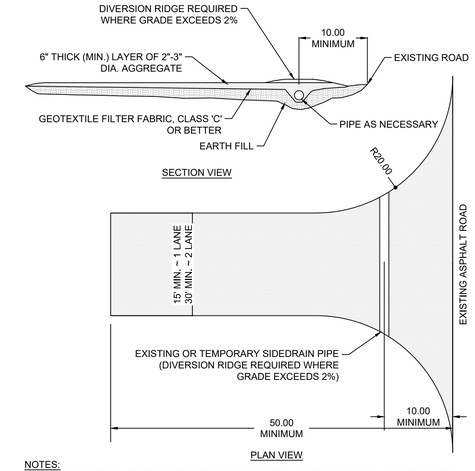

NOTES:

1. CONSTRUCTION ENTRANCES PROVIDE AN AREA WHERE MUD CAN BE REMOVED FROM VEHICLE TIRES BEFORE THEY LEAVE THE CONSTRUCTION SITE. THE MOTION OF THE VEHICLE AS IT MOVES OVER THE GRAVEL CONSTRUCTION MATERIAL DISLODGES CAKED MUD.
2. IF THE ACTION OF THE VEHICLE ON THE GRAVEL PAD IS NOT SUFFICIENT TO DISLODGE MUD, THEN THE TIRES MUST BE WASHED BEFORE THE VEHICLE LEAVES THE SITE.
3. UTILIZE GRAVEL, 2"-3" (MIN.) IN DIAMETER. GRAVEL LAYER SHOULD BE AT LEAST 6" THICK. THE PAD SHOULD BE AT LEAST 50' LONG. WIDTH SHOULD BE APPROPRIATE TO VEHICLE SIZE.

4 TREE PROTECTION

N.T.S.

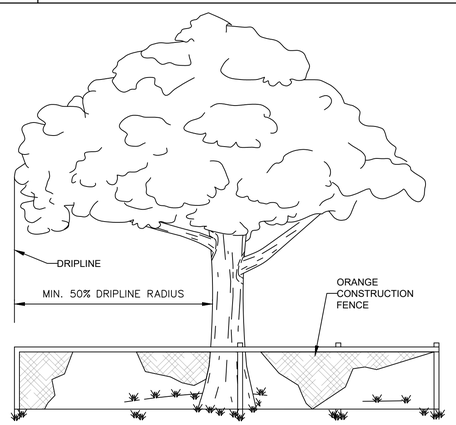

NOTES:

1. FOR TEMPORARY USE DURING CONSTRUCTION. BARRICADE SHALL BE PLACED PRIOR TO ANY LAND DISTURBANCE.
2. TREE BARRICADE SHALL BE PLACED AT THE CRITICAL ROOT ZONE BOUNDARY (1-FOOT RADIUS PER 1-INCH OF TREE DBH).
3. NONE OF THE FOLLOWING ACTIVITIES SHALL OCCUR WITHIN THE TREE PROTECTION BARRICADE: DRIVING, PARKING, STORING MATERIALS, DUMPING WASTE, CONCRETE WASHOUT, ADDING FILL SOIL, TRENCHING, REMOVING SOIL OR GRUBBING.

5 SHRUB PLANTING

N.T.S.

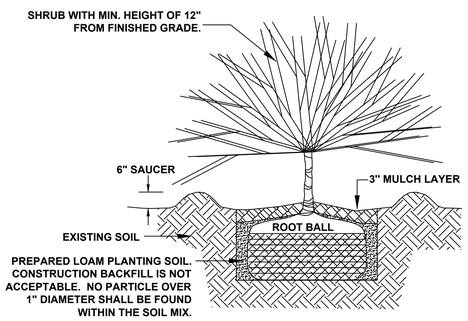

6 TREE PLANTING

N.T.S.

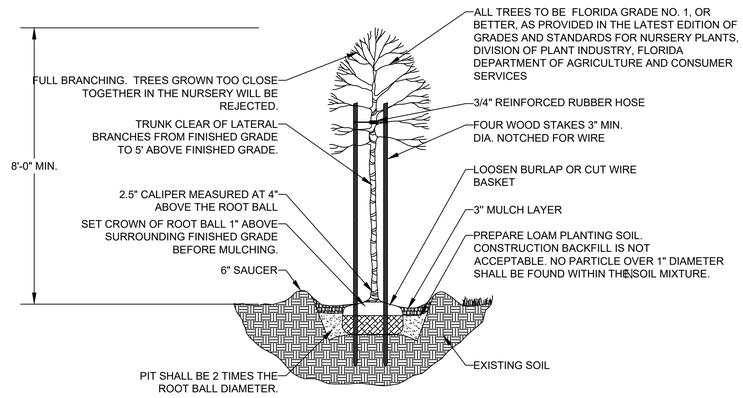

REV.NO.	DESCRIPTION	DATE

REVISIONS

McKIM&CREED
1206 N. Palafox Street
Pensacola, Florida 32501
Phone: (850) 994-9503

CA Lic. No. 29588
www.mckimcreed.com

PACE FIRE STATION #4 ADDITION

DETAILS

EROSION CONTROL DETAILS

ISSUE DATE:	2024-04-30
MCE PROJ. #	07615-0017
DRAWN	C.FELDMEYER
DESIGNED	C.FELDMEYER
CHECKED	A.MAINIERO
PROJ. MGR.	A.MAINIERO

SCALE
HORIZONTAL: AS SHOWN
VERTICAL: AS SHOWN

C-900
DRAWING NUMBER
REVISION

STATUS: BID SET
---

1 STD PARKING STALL N.T.S.

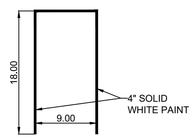

2 THERMO STOP BAR N.T.S.

WHITE THERMOPLASTIC

3 ADA PARKING STALL N.T.S.

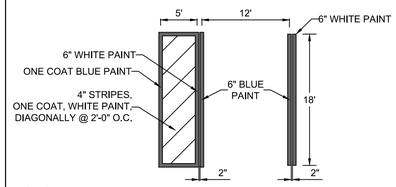

NOTES:

1. MAXIMUM SLOPES OF ADJOINING GUTTERS, ROAD SURFACE IMMEDIATELY ADJACENT TO THE CURB RAMP, OR ACCESSIBLE ROUTE SHALL NOT EXCEED 1:20.
2. THE MAXIMUM SLOPE OF A RAMP IN NEW CONSTRUCTION SHALL BE 1:12.
3. THE CROSS SLOPE OF RAMP SURFACES SHALL BE NO GREATER THAN 1:50.
4. EACH H.C. PARKING SPACE MUST BE SIGNED AND MARKED IN ACCORDANCE WITH THE STANDARDS ACCEPTED BY THE FLORIDA DEPARTMENT OF TRANSPORTATION AND FLORIDA ACCESSIBILITY CODE FOR BUILDING CONSTRUCTION.
5. MAINTAIN MAXIMUM 2% CONSTANT SLOPE ON THE ACCESS AISLE AND HANDICAP VEHICLE SPACES IN EACH DIRECTION PER ADA AND FHA.

4 ADA SIGNAGE N.T.S.

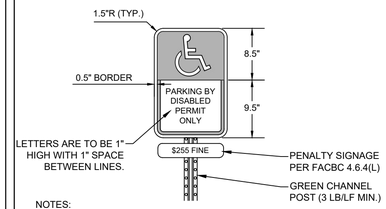

NOTES:

1. TOP PORTION OF SIGN SHALL HAVE A REFLECTIVE BLUE BACKGROUND W/ WHITE REFLECTIVE SYMBOL & BORDER.
2. BOTTOM PORTION SHALL HAVE A REFLECTIVE WHITE BACKGROUND W/ BLACK OPAQUE LEGEND & BORDER.
3. SIGN CAN BE FABRICATED ON ONE PANEL OR TWO
4. SIGNS USED AS PER FLORIDA STATUTES 316.1955 AND 316.1956.
5. THE BOTTOM OF THE SIGN IS TO BE MOUNTED 84" (7') ABOVE GRADE.
6. HANDICAP PARKING SIGNS SHALL CONFORM WITH F.D.O.T. DESIGN STANDARDS PER "ROADWAY AND TRAFFIC DESIGN STANDARDS".

5 ADA SYMBOL N.T.S.

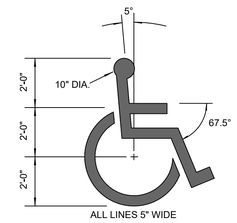

ALL LINES 5" WIDE

PROVIDE PAINTED WHEELCHAIR SYMBOL AT EACH DESIGNATED HANDICAP PARKING STALL. CENTER SYMBOL IN STALL. ONE COAT WHITE PAINT.

6 STOP SIGN N.T.S.

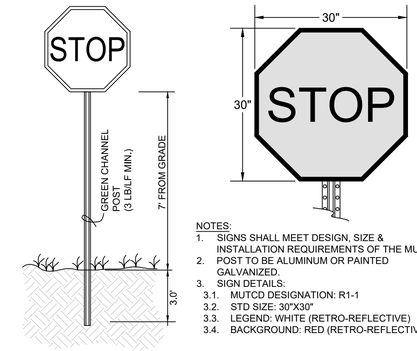

NOTES:

1. SIGNS SHALL MEET DESIGN, SIZE & INSTALLATION REQUIREMENTS OF THE MUTCD.
2. POST TO BE ALUMINUM OR PAINTED GALVANIZED.
3. SIGN DETAILS:
   - 3.1. MUTCD DESIGNATION: R1-1
   - 3.2. STD SIZE: 30"X30"
   - 3.3. LEGEND: WHITE (RETRO-REFLECTIVE)
   - 3.4. BACKGROUND: RED (RETRO-REFLECTIVE)

7 CONCRETE SIDEWALK N.T.S.

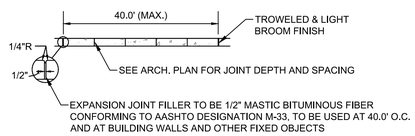

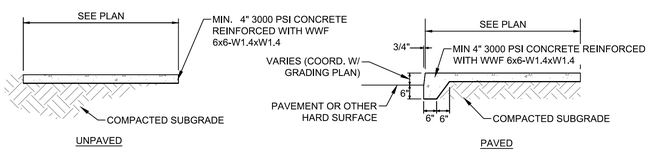

1. MAXIMUM CROSS SLOPE OF 2%.
2. GRADE DROPS ADJACENT TO SIDEWALKS MUST NOT EXCEED 10 INCHES IN THE FIRST 2 FEET.
3. SEE WRITTEN SPECIFICATIONS FOR DETAILED REINFORCEMENT AND JOINT REQUIREMENTS.

8 CONCRETE PAVEMENT SECTION N.T.S.

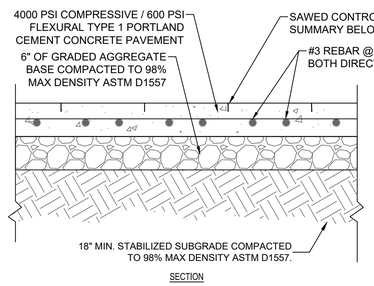

SECTION

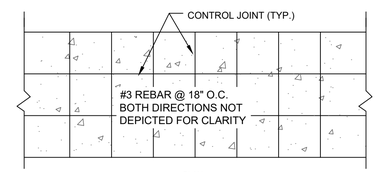

PLAN

CONCRETE PAVING SECTION SUMMARY		
	STANDARD DUTY	HEAVY DUTY
CONCRETE THICKNESS	6.0"	7.0"
CONTROL JOINT MAX. SPACING	12'x12'	14'x14'
RECOMMENDED SAW-CUT DEPTH	1.50"	1.75"

9 TYPICAL CURB & GUTTER TAPER N.T.S.

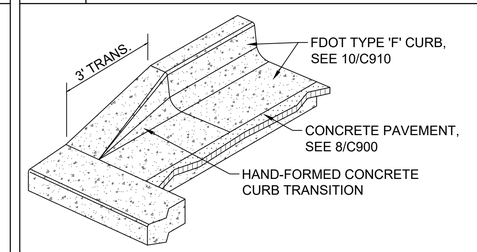

10 TYPE 'F' CURB SECTION N.T.S.

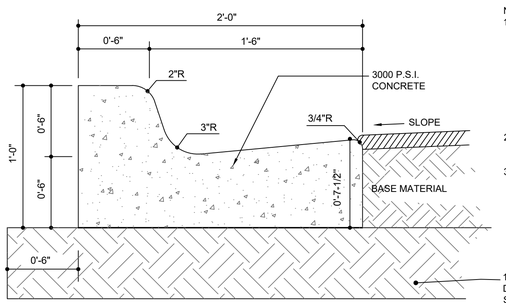

NOTE:

1. ALL MATERIALS USED FOR CONCRETE, AND THE DESIGN OF ALL CONCRETE MIXES, SHALL CONFORM WITH THE RECOMMENDATIONS OF THE AMERICAN CONCRETE INSTITUTE (ACI 318). ALL CONCRETE SHALL DEVELOP A 28-DAY COMPRESSIVE STRENGTH OF 3000 PSI. IF ANY CONCRETE SHOULD FAIL TO MEET THE STRENGTH REQUIREMENT THE STRUCTURE SHALL BE REMOVED AS NECESSARY TO REMOVE THE DEFECTIVE CONCRETE AND SHALL THEN BE REBUILT AT THE CONTRACTOR'S EXPENSE.
2. SEE PAVING DETAIL(S) FOR PAVING AND BASE MATERIALS AND THICKNESS AND/OR VARIATIONS TO SUBGRADE PREPARATION.
3. WHEN USED ON HIGH SIDES OF GRADES, THE GUTTER MUST SPILL ONTO THE ADJACENT PAVEMENT. THE THICKNESS OF THE LIP MUST BE 6" MIN. AT SUCH LOCATIONS.

11 SANITARY CLEANOUT N.T.S.

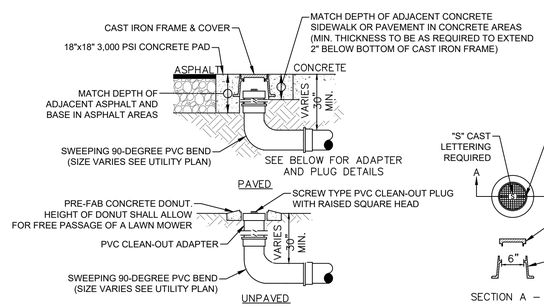

NOTE: CLEAN-OUT PIPE AND FITTINGS TO MATCH SIZE OF LINE INTO WHICH ACCESS IS BEING PROVIDED.

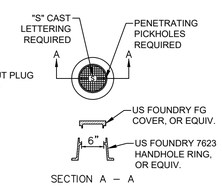

CLEAN-OUT FRAME AND COVER

REV.NO.	DESCRIPTION	DATE

REVISIONS

McKIM&CREED
1206 N. Palafox Street
Pensacola, Florida 32501
Phone: (850) 994-9503

CA Lic. No. 29588
www.mckimcreed.com

PACE FIRE STATION #4 ADDITION

DETAILS

SITE DETAILS

ISSUE DATE:	2024-04-30
MCE PROJ. #	07615-0017
DRAWN	C.FELDMEYER
DESIGNED	C.FELDMEYER
CHECKED	A.MAINIERO
PROJ. MGR.	A.MAINIERO

SCALE
HORIZONTAL: AS SHOWN
VERTICAL: AS SHOWN

C-910
DRAWING NUMBER
REVISION

STATUS: BID SET
---

1 DRY STORMWATER POND

N.T.S.

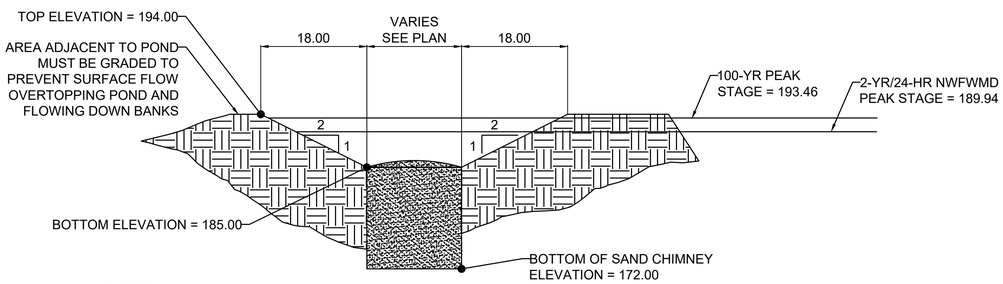

NOTES:

1. THE GEOTECHNICAL ENGINEER OF RECORD MUST BE ON-SITE TO VERIFY THAT THE CHIMNEY IS KEYED INTO THE LOWER PERMEABLE ZONE AND THAT ALL LESS-PERMEABLE MATERIAL HAS BEEN REMOVED FROM THE CHIMNEY ZONE.
2. CONTRACTOR MUST SUBMIT TEST REPORTS FOR PROPOSED CHIMNEY BACKFILL MATERIAL, DEMONSTRATING COMPLIANCE WITH THE FOLLOWING MATERIAL REQUIREMENTS:
   - 2.1. CLEAN, COARSE SAND WITH LESS THAN 5" FINES
   - 2.2. MINIMUM VERTICAL PERMEABILITY OF 30 FT/DAY AT 100% STANDARD DENSITY
   - 2.3. UNIFORMITY COEFFICIENT BETWEEN 1.5-4.0
   - 2.4. GRAIN SIZE BETWEEN 0.20-0.55 mm
3. RETENTION/DETENTION AREAS MUST BE SUBSTANTIALLY COMPLETE PRIOR TO ANY CONSTRUCTION ACTIVITIES THAT MAY INCREASE STORM WATER RUNOFF RATES. THE CONTRACTOR SHALL CONTROL STORM WATER DURING ALL PHASES OF CONSTRUCTION AND TAKE ADEQUATE MEASURES TO PREVENT THE EXCAVATED POND FROM BLINDING DUE TO SEDIMENTS.
4. SIDES OF STORM WATER POND MUST BE IMMEDIATELY STABILIZED WITH SOD UPON CONSTRUCTION.
5. UPON FINAL COMPLETION OF CONSTRUCTION AND STABILIZATION OF ALL UPSTREAM AREAS, POND MUST BE RE-SHAPED AS NECESSARY TO REMOVE ACCUMULATED SEDIMENT AND TO MATCH THE PROPOSED GRADING ON THE PLANS. ALL DISTURBED AREAS MUST BE RE-STABILIZED.

2 RIP-RAP PAD

N.T.S.

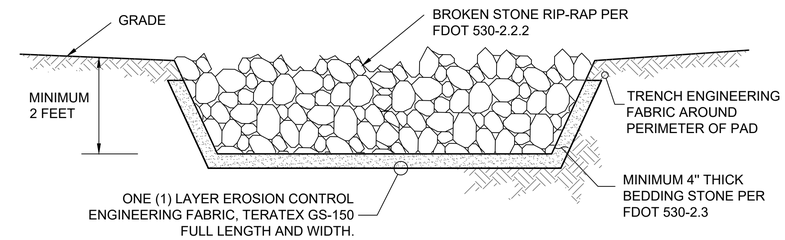

NOTES:

1. RIP-RAP PAD SHALL NOT BE BROKEN CONCRETE, BROKEN STONE SHALL BE ROUGHLY ANGULAR AND FREE FROM THIN OR ELONGATED PIECES.
2. THE RIP-RAP SHOULD BE PLACED SO THAT IT PRODUCES A DENSE, WELL-GRADED MASS OF STONE WITH A MINIMUM OF VOIDS.
3. THE DESIRED DISTRIBUTION OF STONES THROUGHOUT THE MASS MAY BE OBTAINED BY SELECTIVE LOADING AT THE QUARRY, THE CONTROLLED DUMPING OF SUCCESSIVE LOADS DURING FINAL PLACING, OR A COMBINATION OF THESE METHODS.
4. THE RIP-RAP SHOULD BE PLACED TO ITS FULL THICKNESS IN ONE OPERATION, NOT PLACED IN LAYERS. STONES SHOULD NOT BE PLACED BY DUMPING INTO CHUTES OR SIMILAR METHODS THAT ARE LIKELY TO CAUSE SEGREGATION OF THE VARIOUS STONE SIZES. CARE SHOULD BE TAKEN NOT TO DISLODGE THE UNDERLYING MATERIAL WHEN PLACING THE STONES.
5. THE FINISHED SLOPE SHOULD BE FREE OF POCKETS OF SMALL STONE OR CLUSTERS OF LARGE STONES.
6. HAND PLACING MAY BE NECESSARY TO ACHIEVE THE REQUIRED GRADES AND A GOOD DISTRIBUTION OF STONE SIZES.
7. THE FINAL THICKNESS OF THE RIP-RAP BLANKET SHOULD BE WITHIN PLUS OR MINUS ONE-FOURTH OF THE SPECIFIED THICKNESS.
8. TOP OF RIP-RAP SHALL BE FLUSH WITH FINISHED GRADES.

5 TYPICAL GRASSED SWALE

N.T.S.

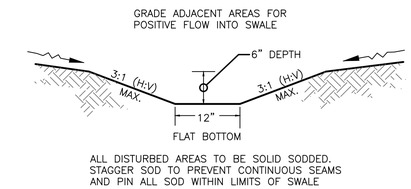

3 CONCRETE MITERED END SECTION

N.T.S.

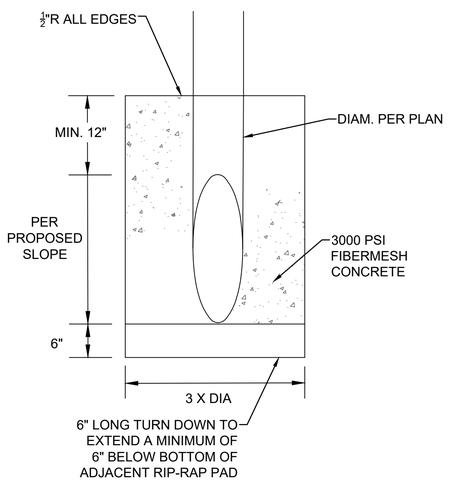

NOTES:

1. SEE FDOT INDEX 430-021 FOR CROSS DRAIN MITERED END SECTION

4 CHAINLINK FENCE AND GATE

N.T.S.

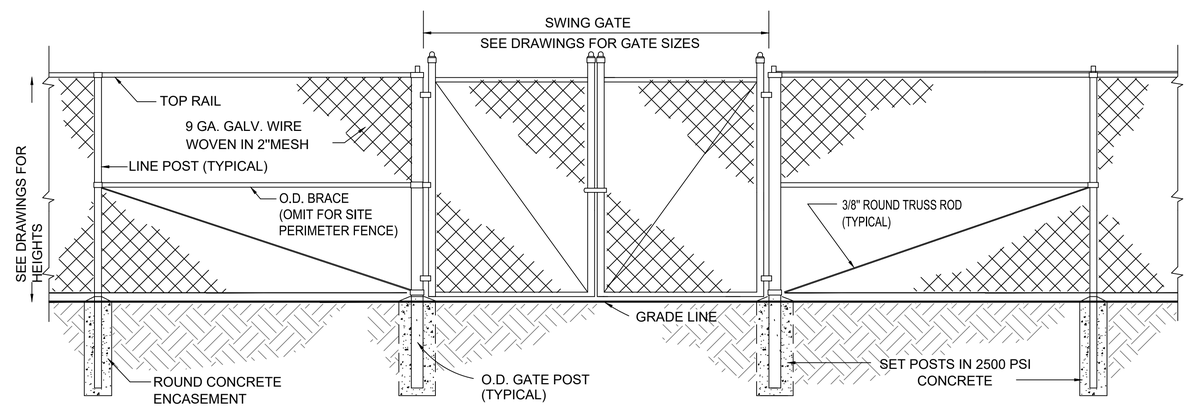

FABRIC:	K & K, 2" X 9 GAUGE, 2 OZ. G.A.W.
TOP RAIL:	1.66" O.D. SS40
LINEPOST:	2.00" O.D. SS40
TERMPOST:	2.5" O.D. SS40
GATEPOST:	2.5" O.D. SS40
DRIVE GATEPOST:	4" O.D. SS40
GATEFRAME:	1-5/8" O.D. WITH CENTER BRACE SS20
DRIVE GATEFRAME:	2" O.D SS40

TIES:	9 GAUGE ALUMINUM
TENSION WIRE:	NO. 7 GALVANIZED STEEL
ALL CAPS AND HARDWARE:	HOT DIPPED GALVANIZED STEEL
POST SETTING:	10' ON CENTER AND FULL DEPTH IN CONCRETE OF 2500 PSI
FOOTINGS:	CONTRACTOR TO INCLUDE PROPOSED DESIGN WITH SHOP DRAWINGS / SUBMITTAL
FINISHES & COATINGS	SEE DRAWINGS AND SPECIFICATIONS (COATED WHERE INDICATED)

REV.NO.	DESCRIPTION	DATE

REVISIONS

McKIM&CREED
1206 N. Palafox Street
Pensacola, Florida 32501
Phone: (850) 994-9503
CA Lic. No. 29588
www.mckimcreed.com

PACE FIRE STATION #4 ADDITION

DETAILS

STORMWATER DETAILS

ISSUE DATE:	2024-04-30
MCE PROJ. #	07615-0017
DRAWN	C.FELDMEYER
DESIGNED	C.FELDMEYER
CHECKED	A.MAINIERO
PROJ. MGR.	A.MAINIERO

SCALE
HORIZONTAL: AS SHOWN
VERTICAL: AS SHOWN

C-920
DRAWING NUMBER
REVISION

STATUS: BID SET

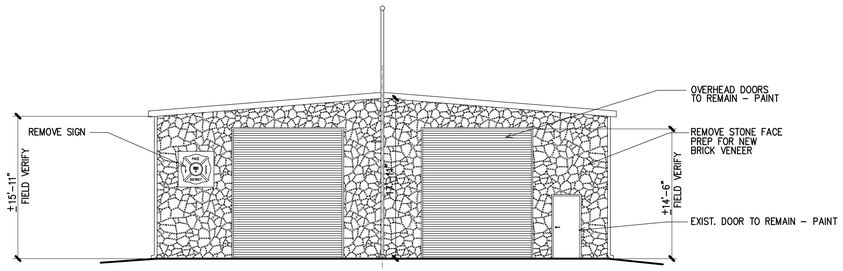

1 / D1.1 **Existing East Elevation**
1/8"=1'-0"

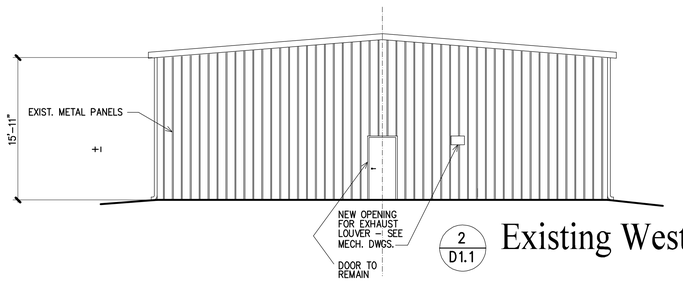

2 / D1.1 **Existing West Elevation**
1/8"=1'-0"

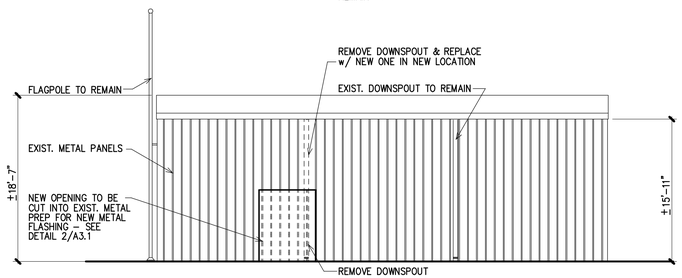

3 / D1.1 **Existing North Elevation**
1/8"=1'-0"

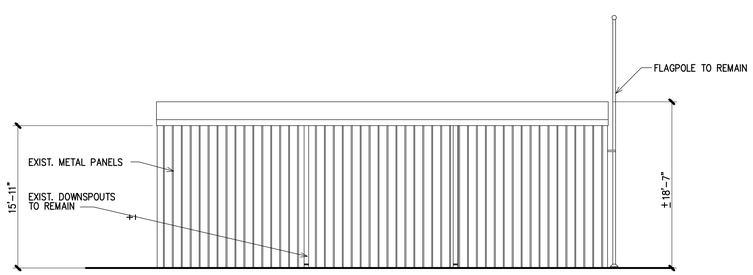

4 / D1.1 **Existing South Elevation**
1/8"=1'-0"

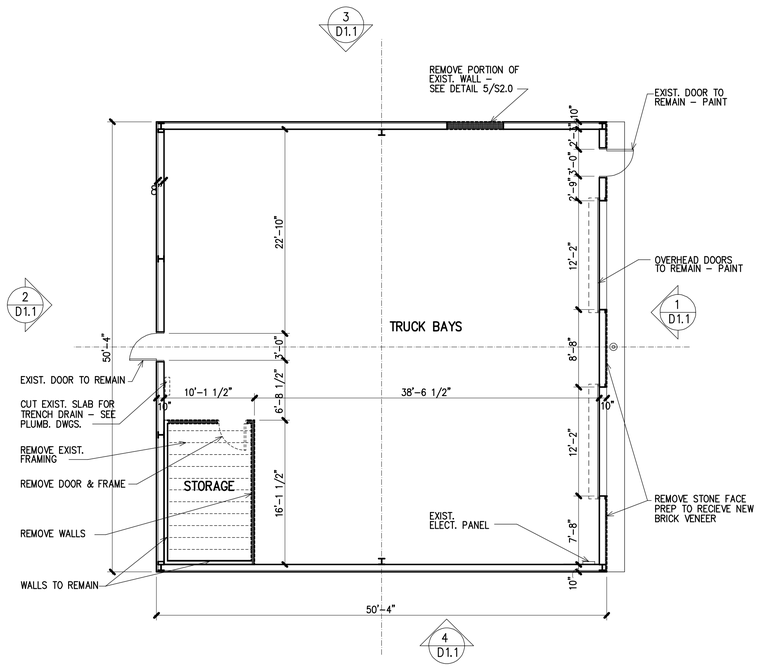

Existing Floor Plan
SHOWING DEMOLITION 1/8"=1'-0"

Quina Grundhoefer Architects
400 West Romana Street Pensacola, Fl 32502
850-433-5575 qg@qgarchitects.com

WALL LEGEND

EXISTING WALLS TO REMAIN

EXISTING WALL TO BE REMOVED

Project
Addition to
Pace Fire Station #4
Pace Fire Rescue District
Pace, Florida

Date: 4/30/24
Project No. 1223
Sheet No. D1.1

CEILING LEGEND

- PAINTED GYP BOARD
- EIFS
- 2x2 LAY-IN ACOUST. CEILING TILE
- 4x4 OPTIMA CEILING PANEL
- 2x2 FLOURESCENT LIGHT FIXTURE – SEE ELEC. DWGS.
- UTILITY LIGHT FIXTURE – SEE ELECT. DWGS
- RECESSED CAN LIGHT FIXTURE– SEE ELECT. DWGS
- WALL SCONCE – SEE ELECT. DWGS
- PENDANT LIGHT – SEE ELECT. DWGS
- CEILING FAN w/ LIGHT – SEE ELECT. DWGS
- AIR SUPPLY – SEE MECH. DWGS.
- RETURN AIR DIFUSER – SEE MECH. DWGS.
- SPRINKLER HEADS – SEE SHEET FP1
- CJ CONTROL JOINT
- DS DOWNSPOUT
- CH CEILING HEIGHT

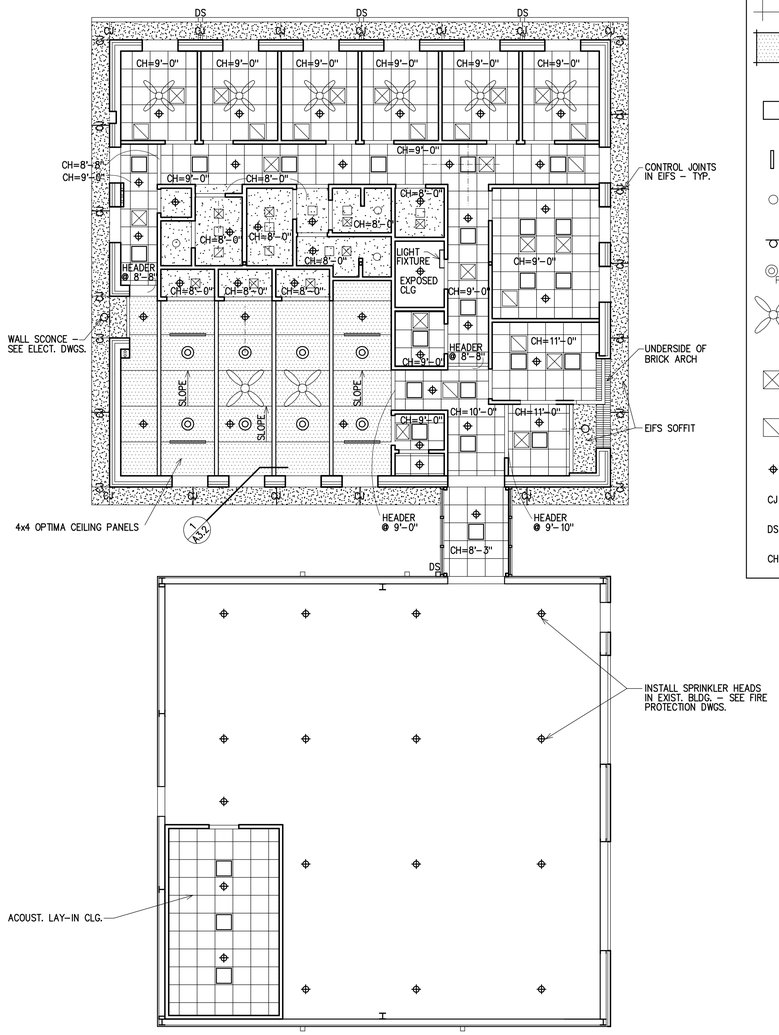

Reflected Ceiling Plan

1/8"=1'-0"

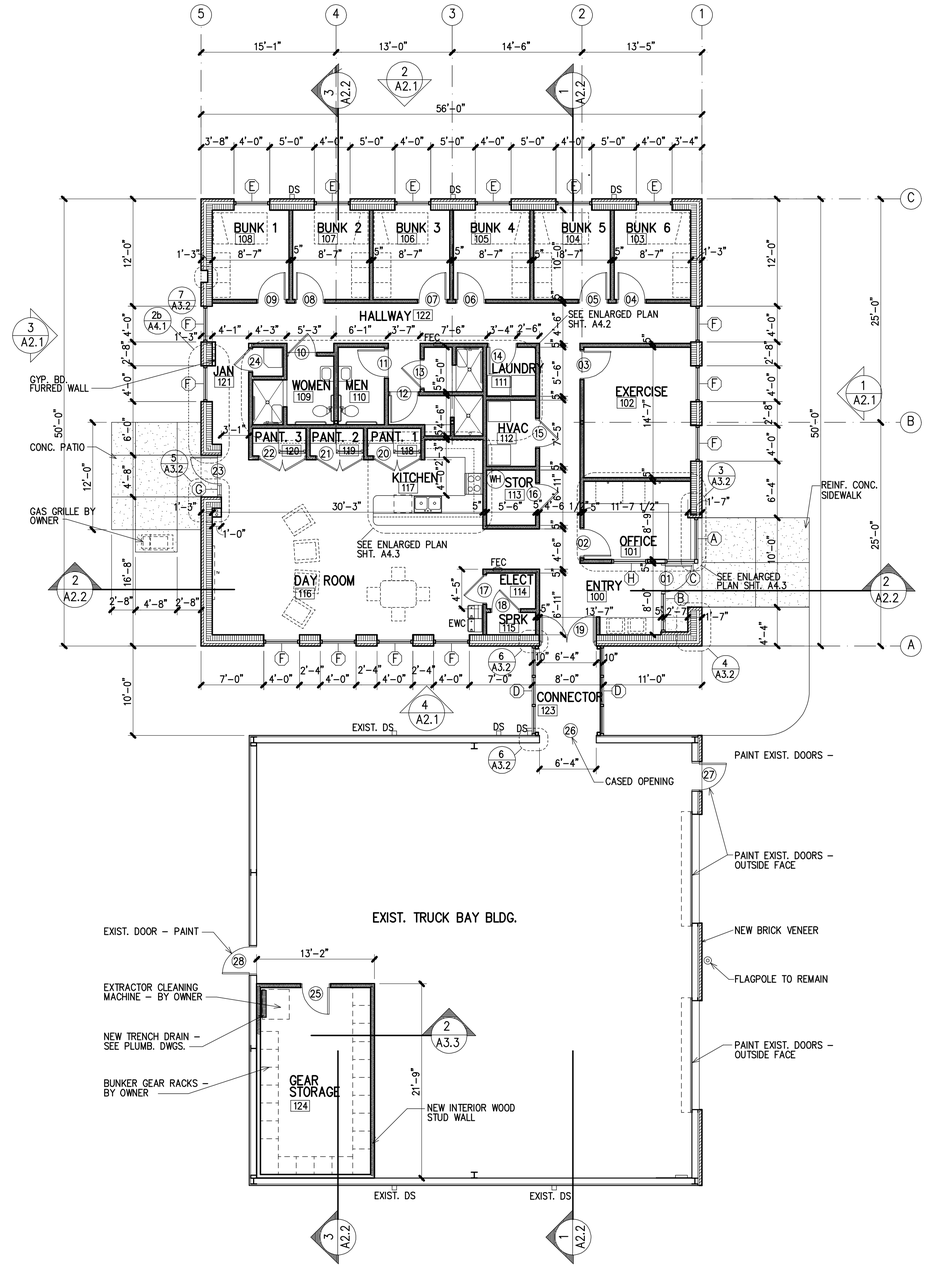

Floor Plan

1/8"=1'-0"

Quina Grundhoefer Architects

400 West Romana Street Pensacola, Fl 32502
850-433-5575 qg@qgarchitects.com

WALL LEGEND

- EXISTING WALLS TO REMAIN
- INTERIOR WALL: 5/8" GYP. BD. ON BOTH SIDES 3 5/8" MTL STUDS @ 16"o.c. (6" MTL STUDS WHERE NOTED) w/ 3 1/2" ACOUSTIC BATT INSULATION
- EXTERIOR WALL: 4" NOMINAL BRICK VENEER w/ AIR SPACE & 2 1/2" RIGID INSULATION ON FLUID APPLIED AIR BURRIER ON 8" CMU'S
- GEAR STORAGE WALL: PAINTED 5/8" CDC PLYWOOD ON 2x4 WOOD STUDS @ 16" o.c.
- 01 NEW DOOR. SEE SHEET A4.1
- A NEW WINDOW. SEE SHEET A4.1
- FEC FIRE EXTINGUISHER CABINET

GENERAL NOTES

1. DIMENSIONS ARE TO FACE OF BRICK, AND FACE OF GYP. BD
2. SEAL ALL PENETRATIONS FROM CONDITIONED TO NON-CONDITIONED SPACES

Project

Addition to
Pace Fire Station #4

Pace Fire Rescue District
Pace, Florida

Date: 4/30/24

Project No. 1223

Sheet No. A1.1

Quina Grundhoefer Architects

400 West Romana Street Pensacola, Fl 32502
850-433-5575 qg@qgarchitects.com

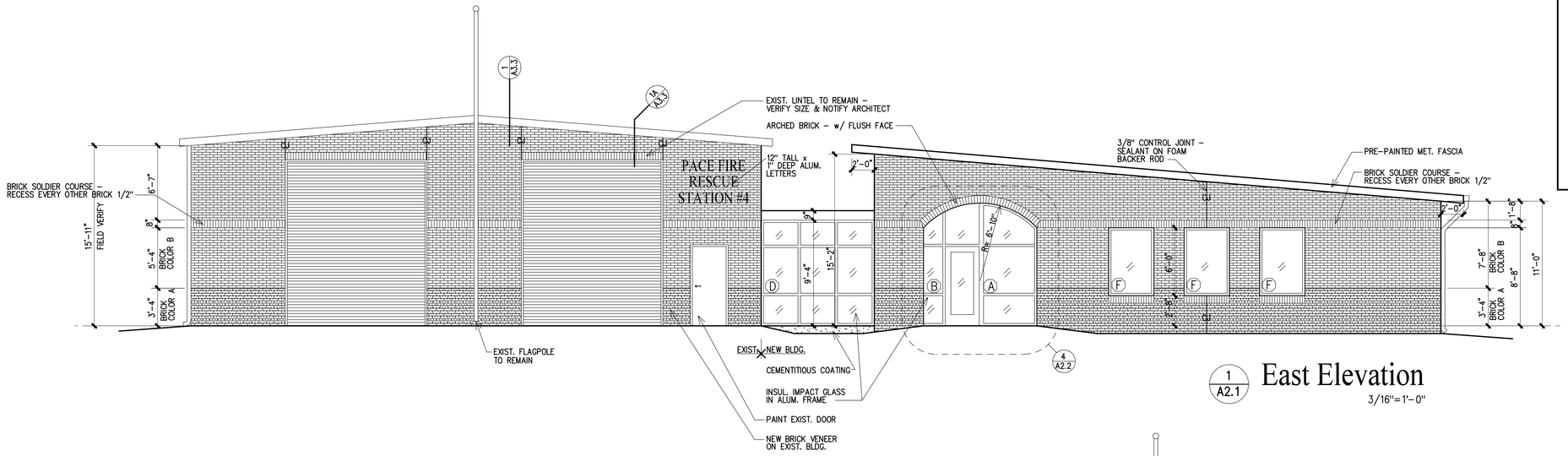

1 A2.1 East Elevation
3/16"=1'-0"

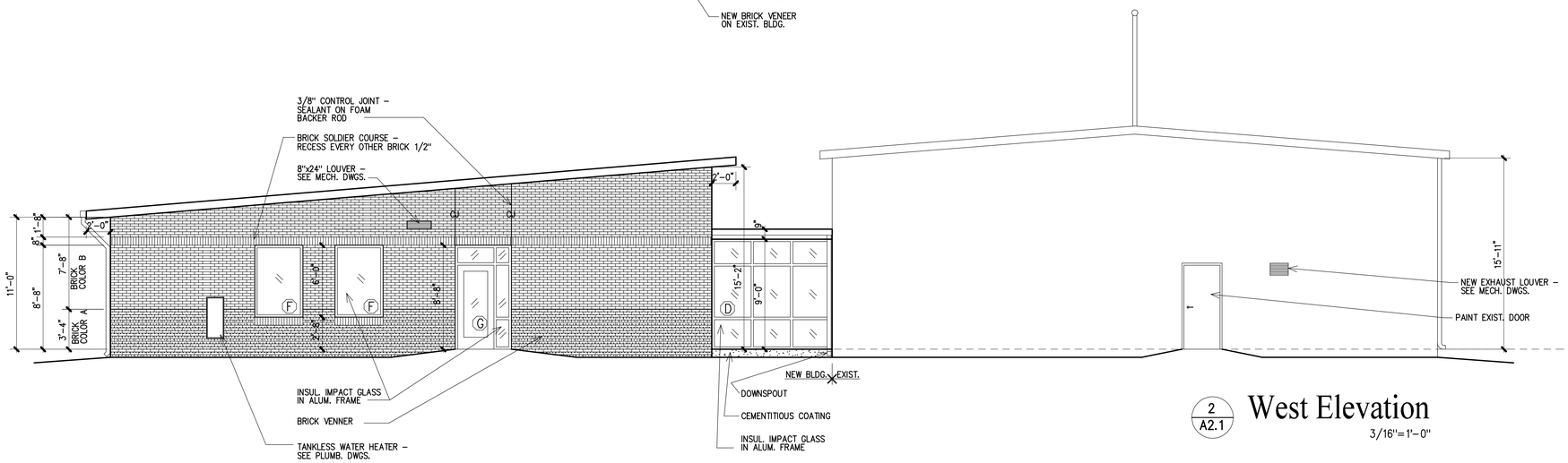

2 A2.1 West Elevation
3/16"=1'-0"

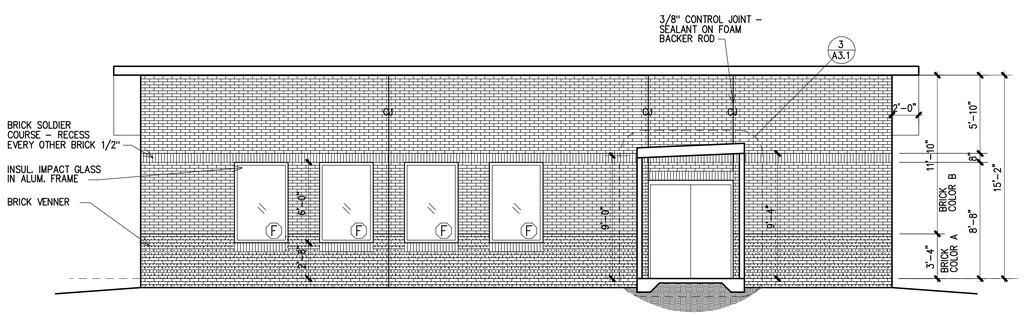

4 A2.1 South Elevation
3/16"=1'-0"

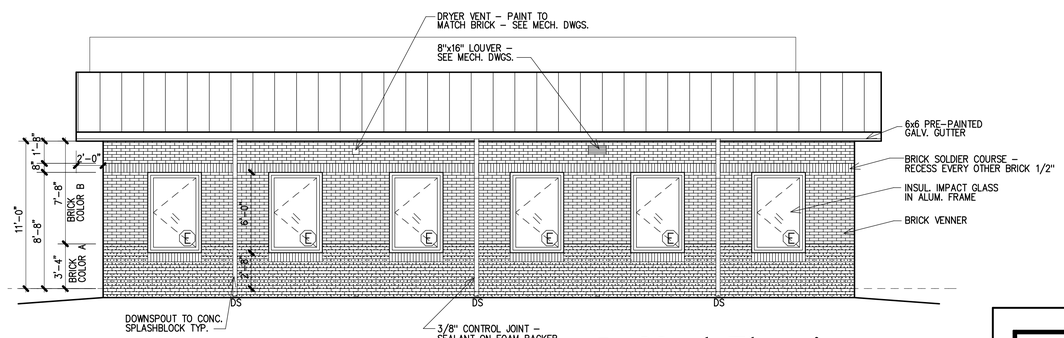

3 A2.1 North Elevation
3/16"=1'-0"

Project
Addition to Pace Fire Station #4
Pace, Florida

Date: 4/30/24
Project No. 1223
Sheet No. A2.1

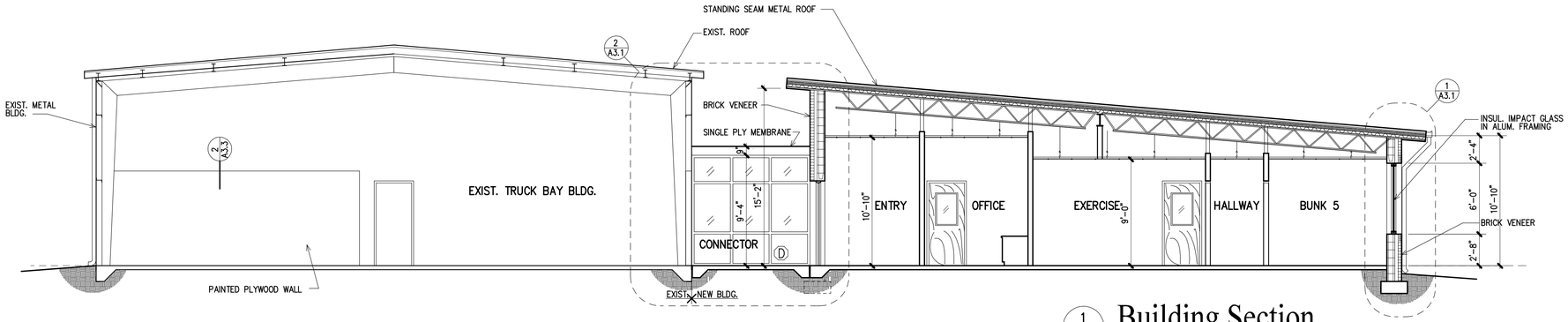

1 A2.2 Building Section
3/16"=1'-0"

Quina Grundhoefer Architects

400 West Romana Street Pensacola, Fl 32502
850-433-5575 qg@qgarchitects.com

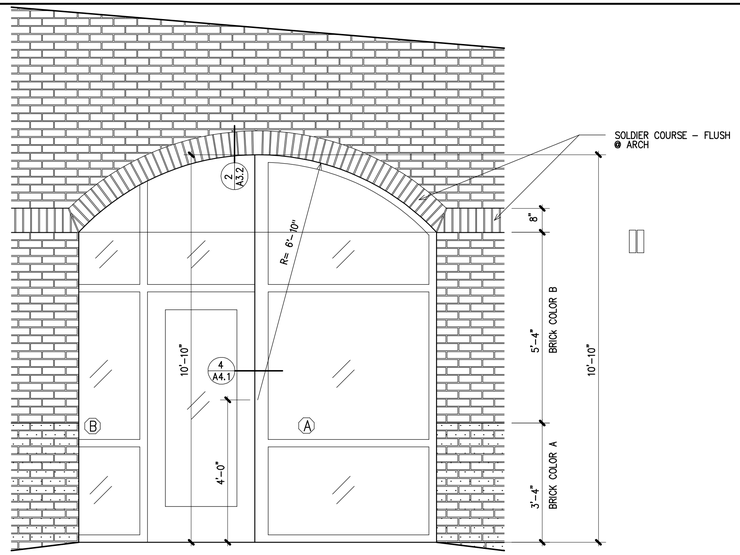

4 A2.2 Partial Elevation
1/2"=1'-0"

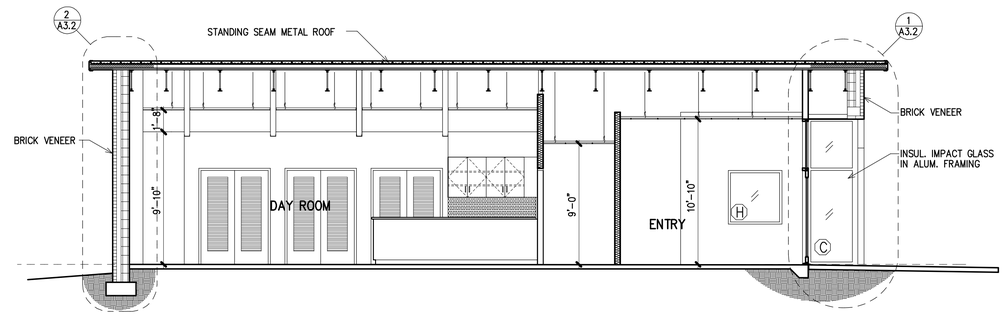

2 A2.2 Building Section
3/16"=1'-0"

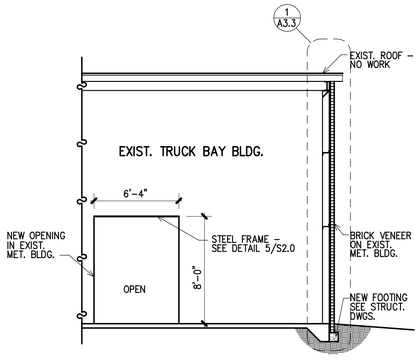

5 A2.2 Partial Building Section
3/16"=1'-0"

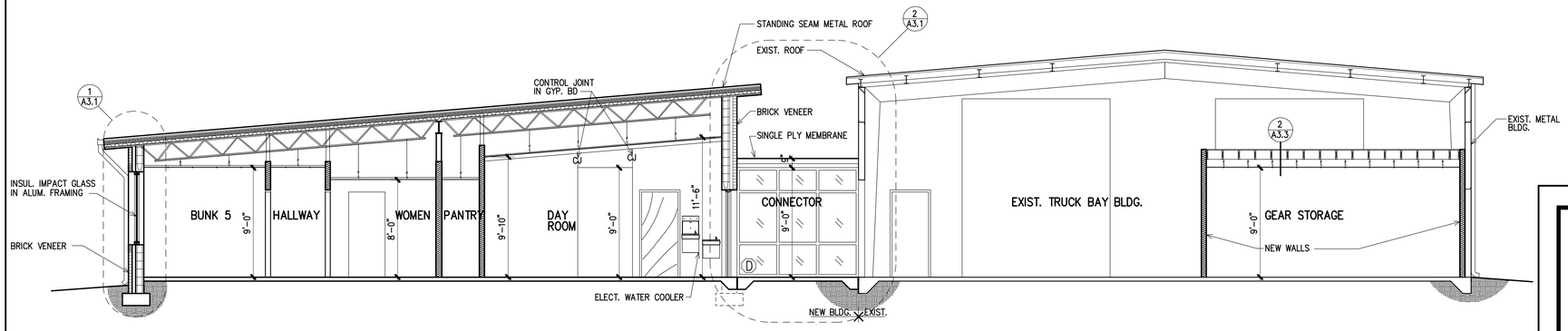

3 A2.2 Building Section
3/16"=1'-0"

Project
Addition to
Pace Fire Station #4
Pace, Florida

Date:
4/30/24
Project No.
1223

Sheet No.
A2.2

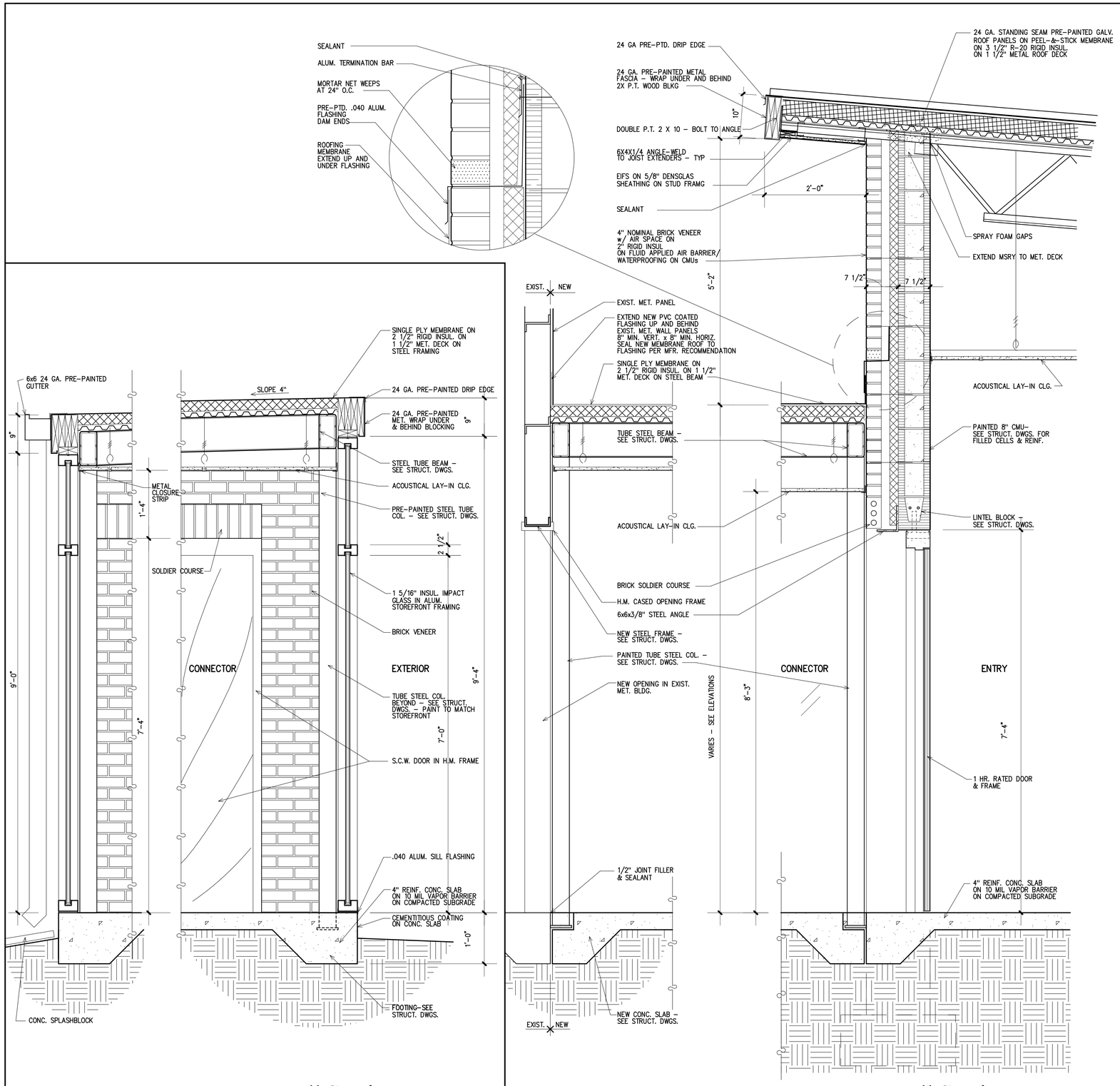

3 A3.1 Wall Section
1"=1'-0"

2 A3.1 Wall Section
1"=1'-0"

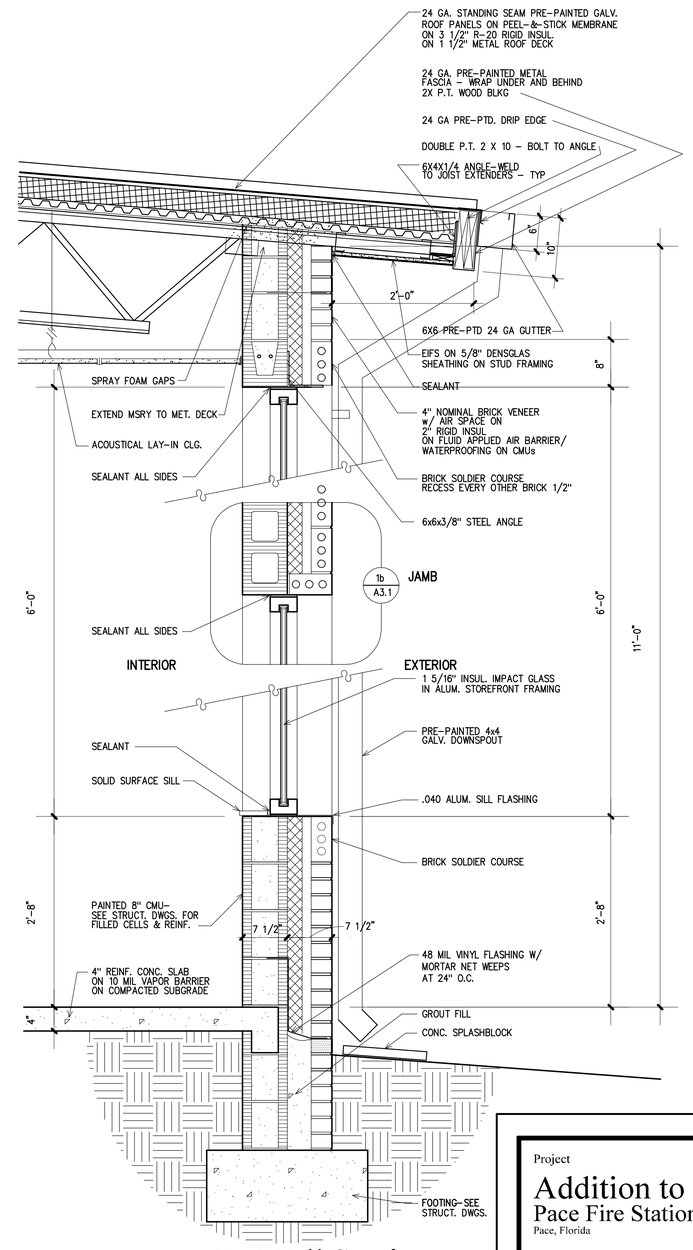

1 A3.1 Wall Section
TYP. EXT. WALL 1"=1'-0"

Quina Grundhoefer Architects
400 West Romana Street Pensacola, Fl 32502
850-433-5575 qg@qgarchitects.com

Project
Addition to Pace Fire Station #4
Pace, Florida

Date: 4/30/24
Project No. 1223
Sheet No. A3.1

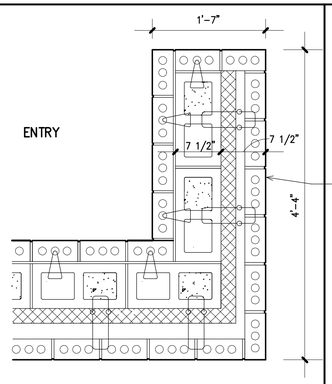

4 / A3.2 Plan Detail
1"=1'-0"

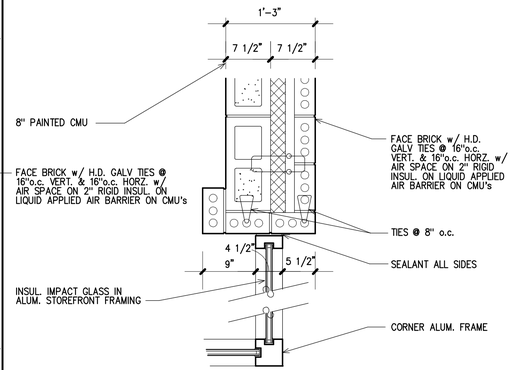

3 / A3.2 Plan Detail
1"=1'-0"

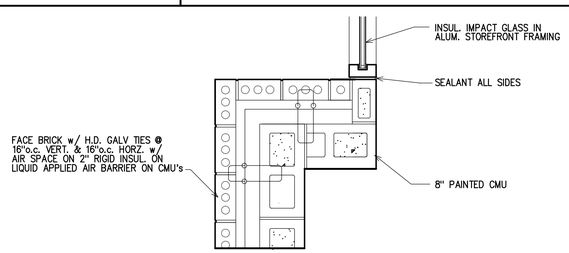

5 / A3.2 Plan Detail
1"=1'-0"

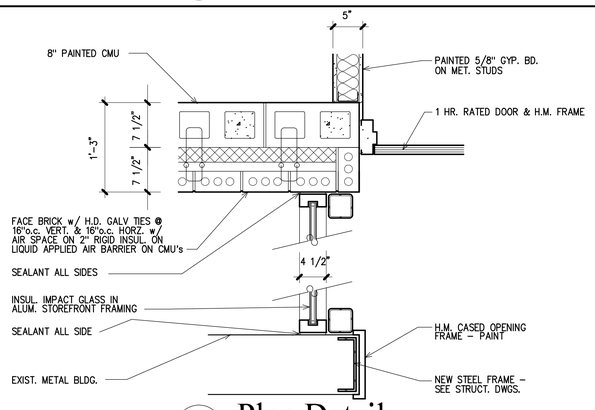

6 / A3.2 Plan Detail
1"=1'-0"

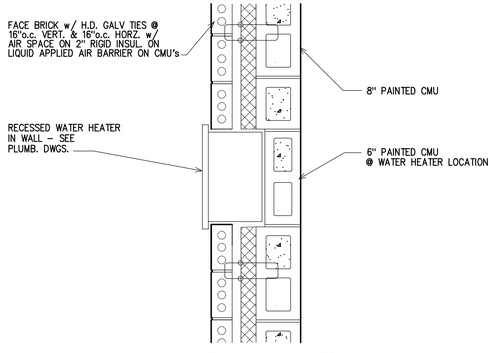

7 / A3.2 Plan Detail
1"=1'-0"

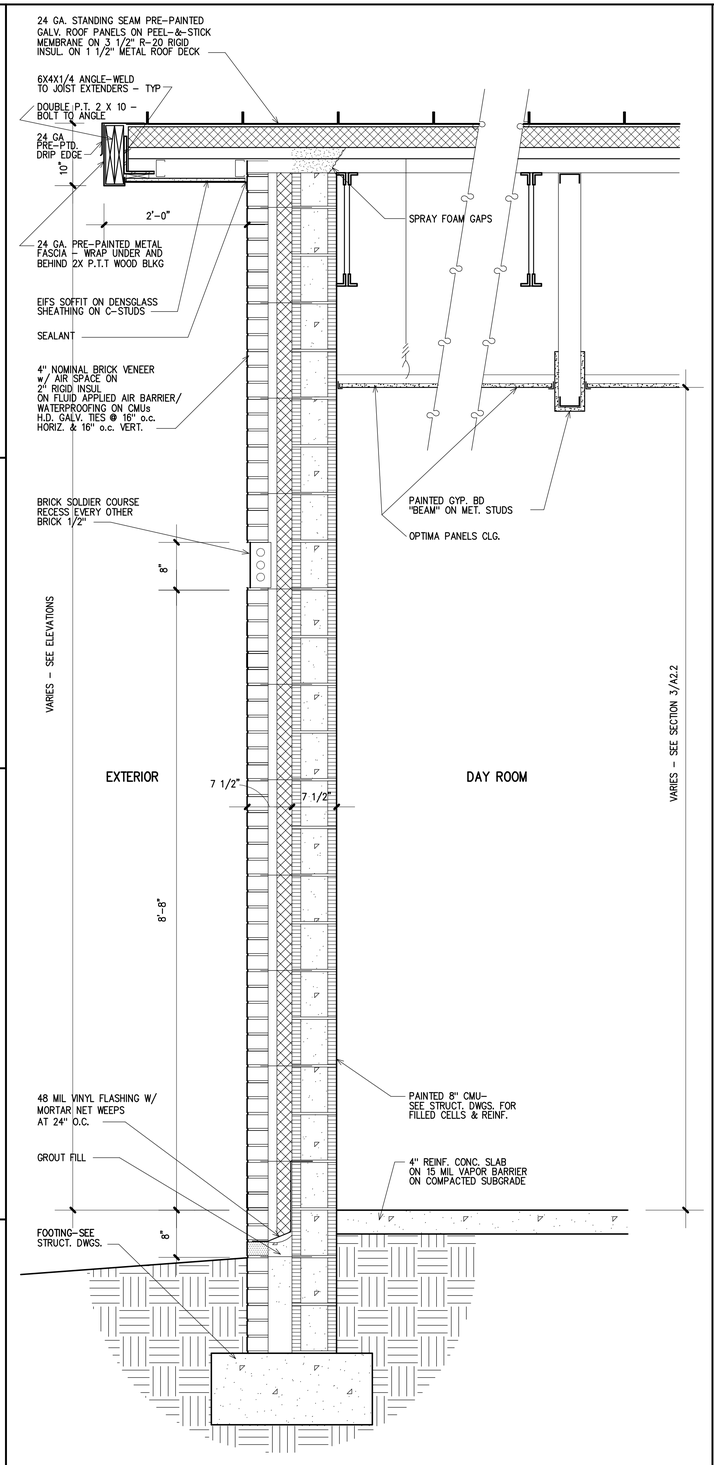

2 / A3.2 Wall Section
1"=1'-0"

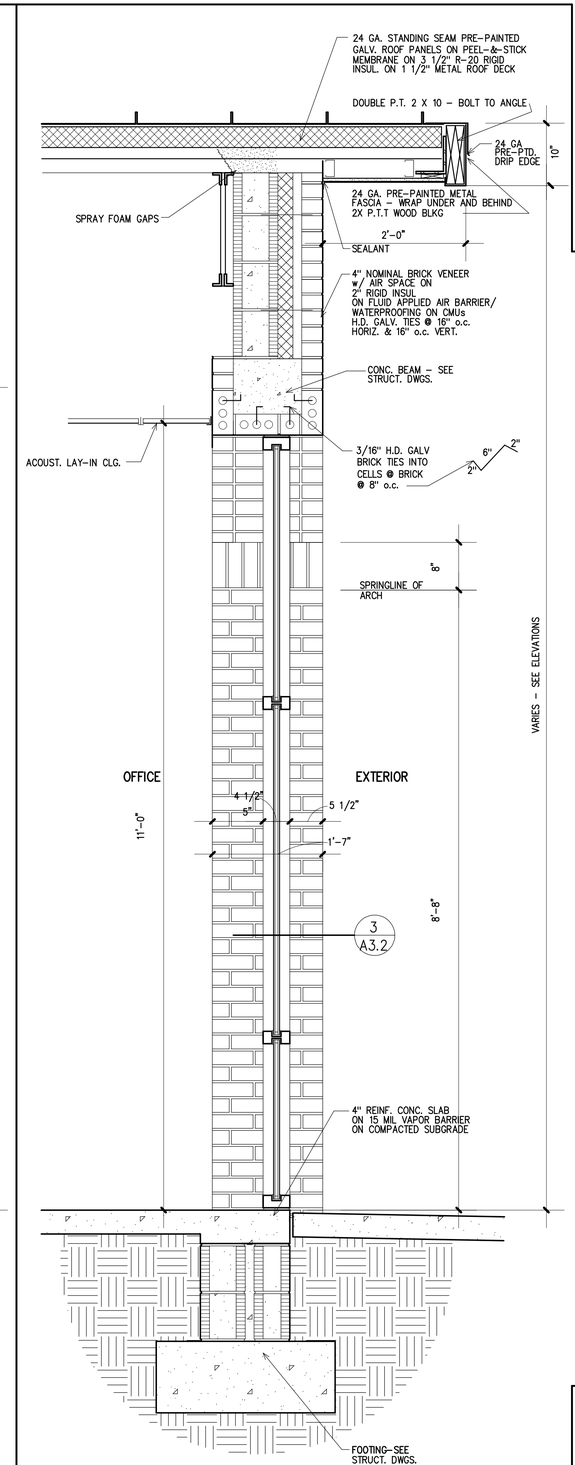

1 / A3.2 Wall Section
1"=1'-0"

Quina Grundhoefer Architects

400 West Romana Street
850-433-5575
Pensacola, Fl 32502
qg@qgarchitects.com

Project
Addition to Pace Fire Station #4
Pace, Florida

Date: 4/30/24
Project No. 1223
Sheet No. A3.2

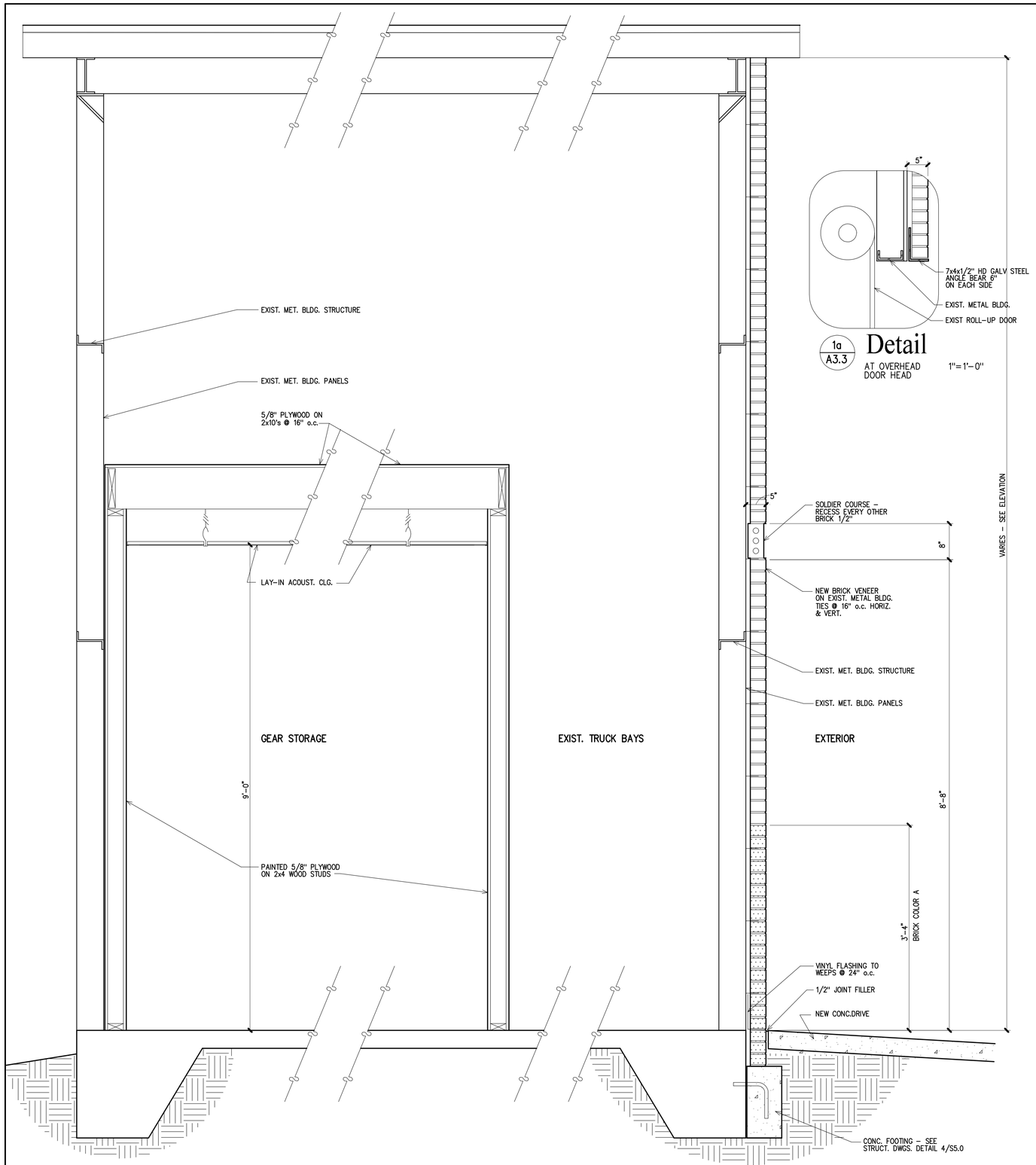

2 A3.3 Wall Section
1"=1'-0"

1 A3.3 Wall Section
1"=1'-0"

1a A3.3 Detail
AT OVERHEAD DOOR HEAD
1"=1'-0"

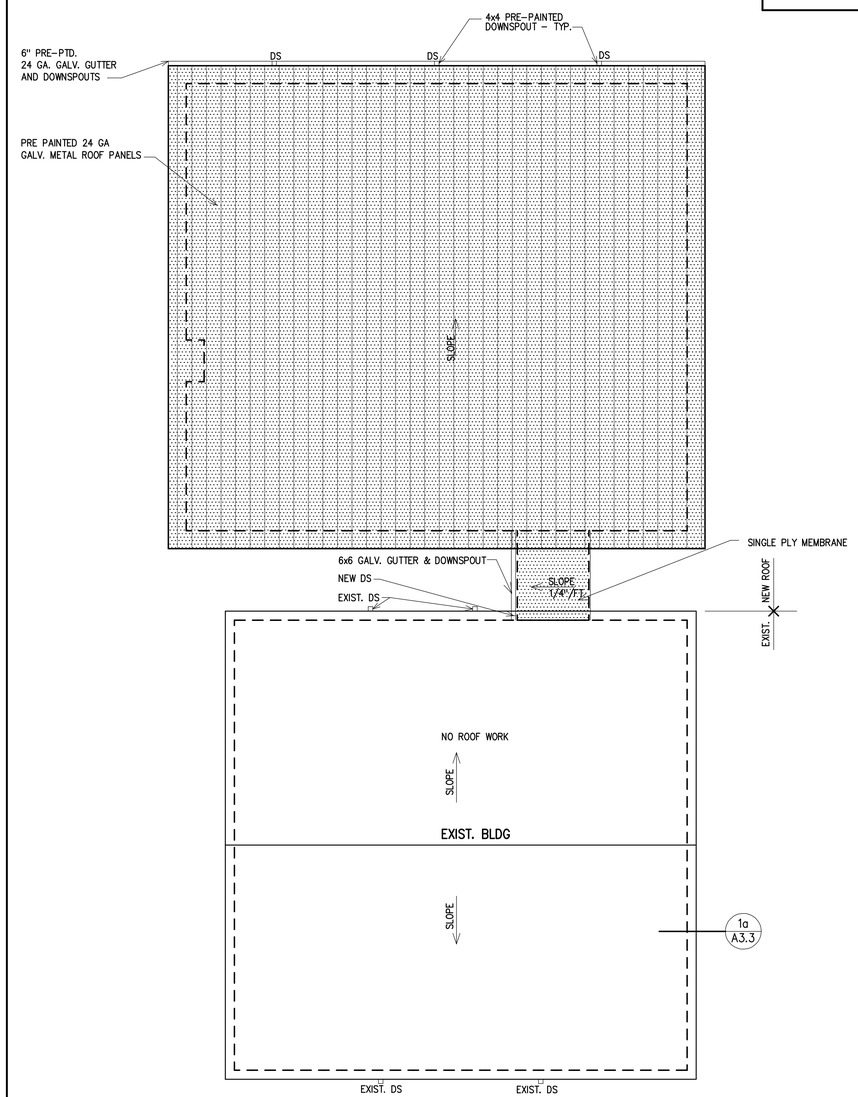

Roof Plan
1/8"=1'-0"

Quina Grundhoefer Architects
400 West Romana Street Pensacola, Fl 32502
850-433-5575 qg@qgarchitects.com

Project
Addition to
Pace Fire Station #4
Pace Fire Rescue District
Pace, Florida

Date: 4/30/24
Project No. 1223
Sheet No. A3.3

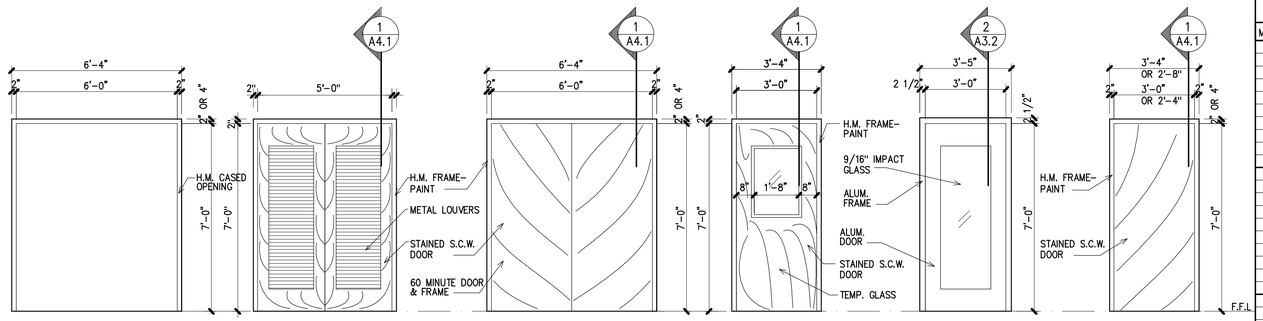

ELEV. F
S.C.W. DOOR IN H.M. FRAME

ELEV. E
S.C.W. DOOR w/ H.M. FRAME

ELEV. D
S.C.W. DOOR IN H.M. FRAME

ELEV. C
S.C.W. DOOR w/ GLASS IN H.M. FRAME

ELEV. B
ALUM. DOOR IN ALUM. STOREFRONT FRAMING

ELEV. A
S.C.W. DOOR IN H.M. FRAME

Door Elevations

3/8"=1'-0"

DOOR SCHEDULE

MARK	ELEV	LOCATION	SIZE(wxhxth)	FRM. TYPE	DOOR TYPE	HEAD	JAMB	T'HOLD	HDW. SET	UNDERCUT	REMARKS
01	B	ENTRY	3'-0"x7'-0"x1 3/4"	ALUM.	ALUM./GLASS	3a/A4.1	3b/A4.1	3c/A4.1	1		PANIC DEVICE – ACCESS CONTROL
02	C	OFFICE	3'-0"x7'-0"x1 3/4"	H.M.	S.C.W./GLASS	1a/A4.1	1b/A4.1	1c/A4.1	2		
03	C	EXERCISE	3'-0"x7'-0"x1 3/4"	H.M.	S.C.W./GLASS	1a/A4.1	1b/A4.1	1c/A4.1	3		
04	A	BUNK 6	3'-0"x7'-0"x1 3/4"	H.M.	S.C.W.	1a/A4.1	1b/A4.1	1c/A4.1	4		
05	A	BUNK 5	3'-0"x7'-0"x1 3/4"	H.M.	S.C.W.	1a/A4.1	1b/A4.1	1c/A4.1	4		
06	A	BUNK 4	3'-0"x7'-0"x1 3/4"	H.M.	S.C.W.	1a/A4.1	1b/A4.1	1c/A4.1	4		
07	A	BUNK 3	3'-0"x7'-0"x1 3/4"	H.M.	S.C.W.	1a/A4.1	1b/A4.1	1c/A4.1	4		
08	A	BUNK 2	3'-0"x7'-0"x1 3/4"	H.M.	S.C.W.	1a/A4.1	1b/A4.1	1c/A4.1	4		
09	A	BUNK 1	3'-0"x7'-0"x1 3/4"	H.M.	S.C.W.	1a/A4.1	1b/A4.1	1c/A4.1	4		
10	A	WOMEN	3'-0"x7'-0"x1 3/4"	H.M.	S.C.W.	1a/A4.1	1b/A4.1	1c/A4.1	4	5/8"	
11	A	MEN	3'-0"x7'-0"x1 3/4"	H.M.	S.C.W.	1a/A4.1	1b/A4.1	1c/A4.1	4	5/8"	
12	A	MEN SHOWER	3'-0"x7'-0"x1 3/4"	H.M.	S.C.W.	1a/A4.1	1b/A4.1	1c/A4.1	4	5/8"	
13	A	MEN SHOWER	3'-0"x7'-0"x1 3/4"	H.M.	S.C.W.	1a/A4.1	1b/A4.1	1c/A4.1	4	5/8"	
14	A	LAUNDRY	3'-0"x7'-0"x1 3/4"	H.M.	S.C.W.	1a/A4.1	1b/A4.1	1c/A4.1	3	5/8"	
15	A	HVAC	3'-0"x7'-0"x1 3/4"	H.M.	S.C.W.	1a/A4.1	1b/A4.1	1c/A4.1	3		
16	A	STORAGE	3'-0"x7'-0"x1 3/4"	H.M.	S.C.W.	1a/A4.1	1b/A4.1	1c/A4.1	5	5/8"	
17	A	ELECT.	3'-0"x7'-0"x1 3/4"	H.M.	S.C.W.	1a/A4.1	1b/A4.1	1c/A4.1	6	5/8"	PANIC DEVICE
18	A	SPRINKLER	3'-0"x7'-0"x1 3/4"	H.M.	S.C.W.	1a/A4.1	1b/A4.1	1c/A4.1	3		
19	D	CONNECTOR	PAIR 3'-0"x7'-0"x1 3/4"	H.M.	S.C.W.	2a/A3.1	2b/A3.1	2c/A3.1	7		FIRE RATED – HOLD OPEN DEVICE–TIE TO FIRE ALARM
20	E	PANTRY 1	PAIR 2'-6"x7'-0"x1 3/4"	H.M.	S.C.W.	1a/A4.1	1b/A4.1	1c/A4.1	8		
21	E	PANTRY 2	PAIR 2'-6"x7'-0"x1 3/4"	H.M.	S.C.W.	1a/A4.1	1b/A4.1	1c/A4.1	8		
22	E	PANTRY 3	PAIR 2'-6"x7'-0"x1 3/4"	H.M.	S.C.W.	1a/A4.1	1b/A4.1	1c/A4.1	8		
23	B	DAY ROOM	3'-0"x7'-0"x1 3/4"	ALUM.	ALUM./GLASS	2a/A4.1	2b/A4.1	2c/A4.1	1		PANIC DEVICE – ACCESS CONTROL
24	A	JANITOR	2'-4"x7'-0"x1 3/4"	H.M.	S.C.W.	1a/A4.1	1b/A4.1	1c/A4.1	3		
25	A	GEAR STORAGE	3'-0"x7'-0"x1 3/4"	H.M.	S.C.W.	1a/A4.1	1b/A4.1	1c/A4.1	3		
26	F	CONNECTOR	3'-0"x7'-0"x1 3/4"	H.M.	NO DOOR	1a/A4.1	1b/A4.1	1c/A4.1	–		CASED OPENING
27		EXIST TRUCK BAYS	EXIST						9		CHANGE EXIST LOCK TO KEY PAD
28		EXIST TRUCK BAYS	EXIST						9		CHANGE EXIST LOCK TO KEY PAD

Quina Grundhoefer Architects

400 West Romana Street Pensacola, Fl 32502
850-433-5575 qg@qgarchitects.com

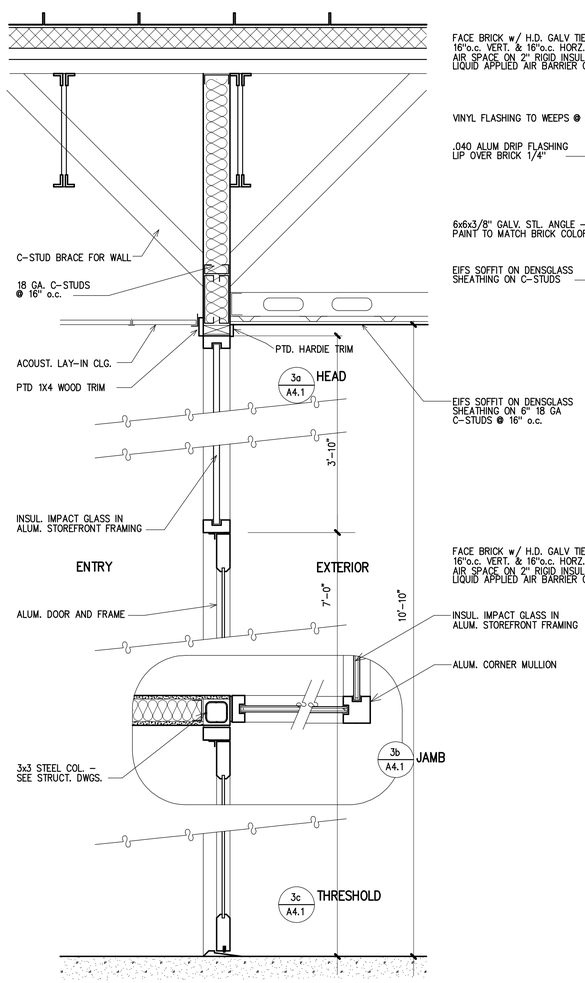

3 A4.1 **Door Detail**
EXTERIOR DOORS 1"=1'-0"
H.M. DOOR IN BLOCK & BRICK WALL

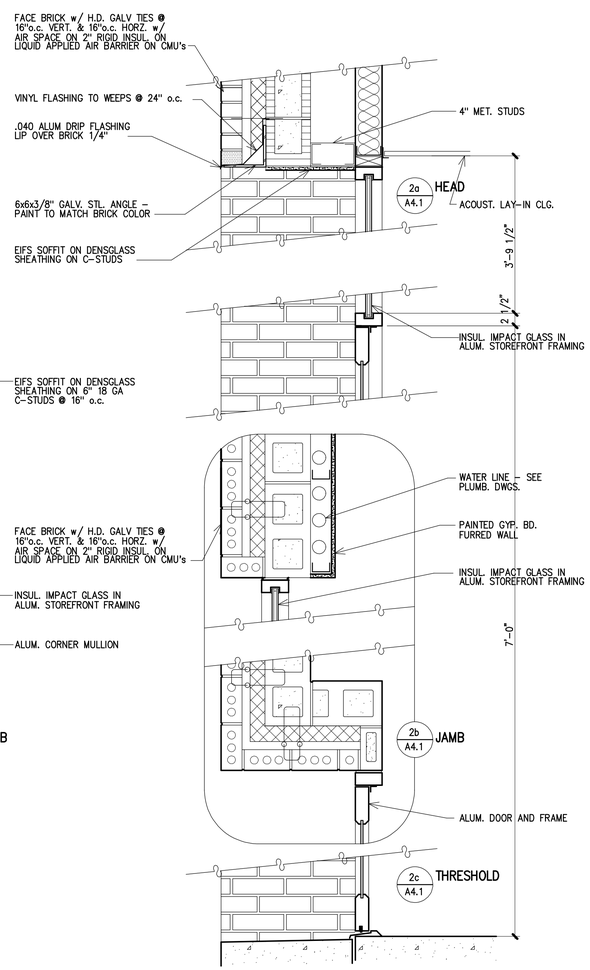

2 A4.1 **Door Detail**
EXTERIOR DOORS 1"=1'-0"
H.M. DOOR IN BLOCK & BRICK WALL

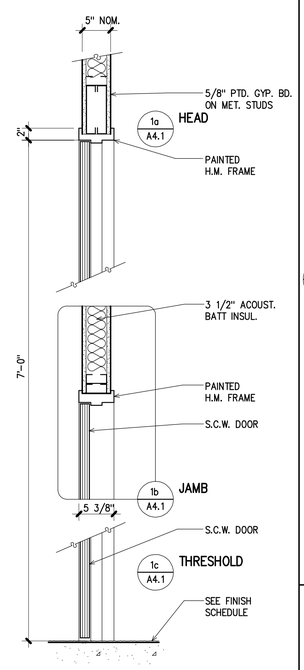

1 A4.1 **Door Detail**
TYP. INTERIOR DOOR 1"=1'-0"
H.M. DOOR IN STUD WALL

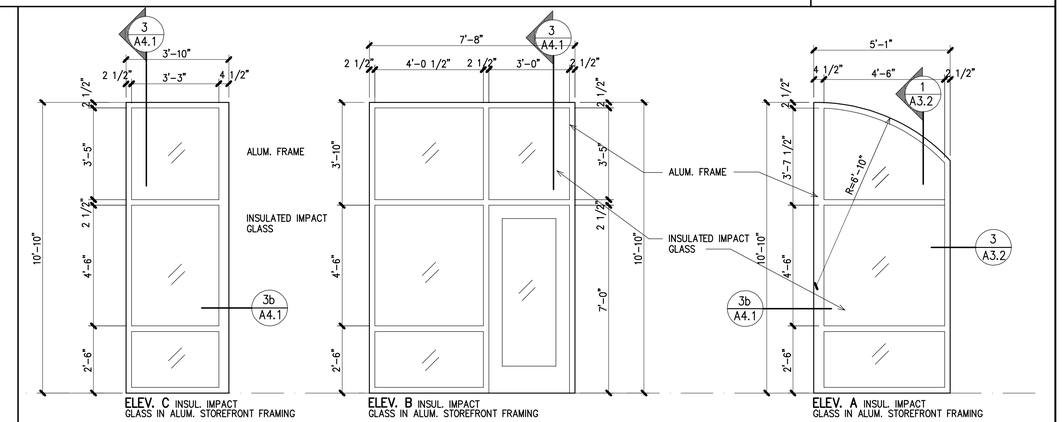

ELEV. C INSUL. IMPACT GLASS IN ALUM. STOREFRONT FRAMING

ELEV. B INSUL. IMPACT GLASS IN ALUM. STOREFRONT FRAMING

ELEV. A INSUL. IMPACT GLASS IN ALUM. STOREFRONT FRAMING

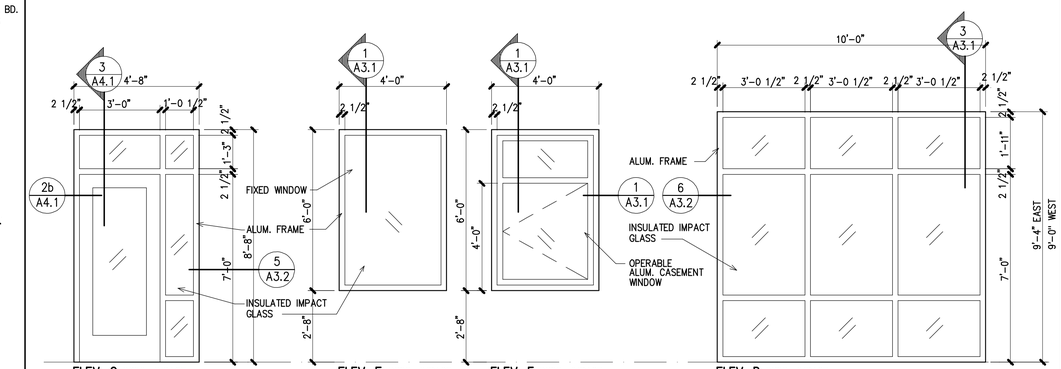

ELEV. G INSUL. IMPACT GLASS IN ALUM. STOREFRONT FRAMING

ELEV. F INSUL. IMPACT GLASS IN ALUM. STOREFRONT FRAMING

ELEV. E INSUL. IMPACT GLASS IN ALUM. STOREFRONT FRAMING

ELEV. D INSUL. IMPACT GLASS IN ALUM. STOREFRONT FRAMING

Exterior Window Elev.

3/8"=1'-0"

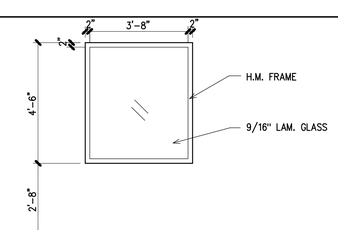

ELEV. H
TEMPER GLASS IN H.M. FRAME

Interior Window Elev.

3/8"=1'-0"

Project
Addition to Pace Fire Station #4
Pace, Florida

Date: 4/30/24
Project No. 1223

Sheet No.
A4.1

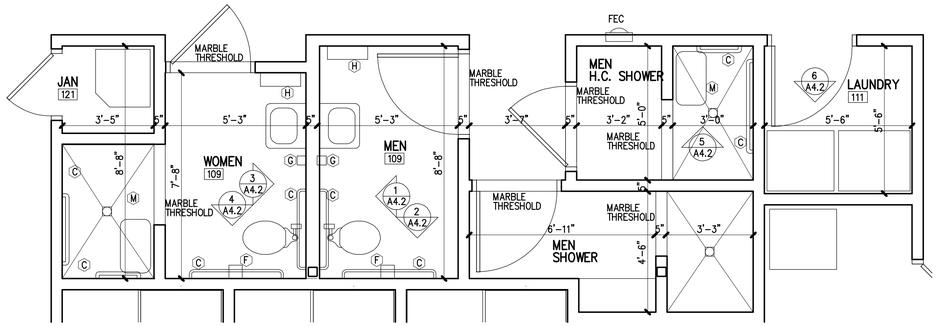

Enlarged Floor Plan

3/8"=1'-0"

TOILET ACCESSORIES SCHEDULE

MK	DESCRIPTION	MOUNTING HEIGHT	SPEC	REMARKS
A	STAINLESS STEEL GRAB BAR	TOP AT 36" A.F.F. MAX.	AMERICAN SPECIALTIES 3800-36	1 1/2" DIA.x36" LONG
B	STAINLESS STEEL GRAB BAR	TOP AT 36" A.F.F. MAX.	AMERICAN SPECIALTIES 3800-42	1 1/2" DIA.x42" LONG
C	STAINLESS STEEL GRAB BAR	BOTTOM AT 41" A.F.F. MAX.	AMERICAN SPECIALTIES 3800-18	1 1/2" DIA.x18" LONG
D	STAINLESS STEEL GRAB BAR	TOP AT 36" A.F.F. MAX.	AMERICAN SPECIALTIES 3800-20	1 1/2" DIA.x20" LONG
E	STAINLESS STEEL GRAB BAR	TOP AT 36" A.F.F. MAX.	AMERICAN SPECIALTIES 3800-48	1 1/2" DIA.x48" LONG
F	TOILET TISSUE DISPENSER	OUTLET AT 18" A.F.F. MIN.	AMERICAN SPECIALTIES 0600	
G	SOAP DISPENSER	DISPENSER AT 48" A.F.F. MAX.	AMERICAN SPECIALTIES 0347	
H	PAPER TOWEL DISPENSER / TRASH CAN	TOP AT 63" A.F.F.	AMERICAN SPECIALTIES 20469	
J	UNFRAMED MIRROR	BOTTOM AT 3'-6" A.F.F.		18"x36"
K	UNDER LAVATORY GUARD		TRUEBRO LAV-SHIELD 2018-KO-K	
L	CLOTHES HOOK	TOP AT 48" A.F.F.	AMERICAN SPECIALTIES 8425	
M	FOLDING SHOWER SEAT	TOP AT 19" A.F.F. MAX.	AMERICAN SPECIALTIES 8203-33	

NOTE: ACCESSORIES BY AMERICAN SPECIALTIES INC. OR EQUAL AS LISTED IN SPECS. CONTRACTOR TO PROVIDE SOLID BLOCKING IN WALL FOR MOUNTING. CONTRACTOR TO PROVIDE A SHOWER SPRAY UNIT COMPLYING w/ FBC 608.6: HEAD w/ A HOSE 59 INCHES LONG (HANDHELD & FIXED MOUNT)

Quina Grundhoefer Architects

400 West Romana Street Pensacola, Fl 32502
850-433-5575 qg@qgarchitects.com

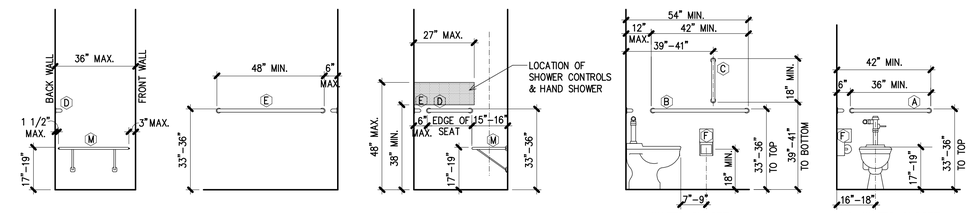

SHOWER COMPARTMENT SEAT WALL
610.3 - SHOWER SEAT

SHOWER COMPARTMENT BACK WALL
2017 IBC 608.3.2.1 - GRAB BAR

SHOWER COMPARTMENT CONTROL WALL
608.3.3 - GRAB BARS
608.5.3(a) - CONTROLS

H.C. WATER CLOSET

H.C. WATER CLOSET

Typ. ADA Mounting Heights

3/8"=1'-0"

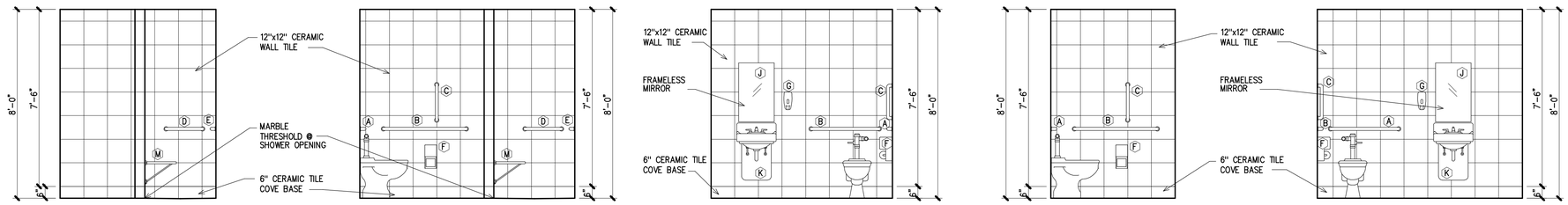

5/A4.2 Int. Elevation
MEN 110 3/8"=1'-0"

4/A4.2 Int. Elevation
WOMEN 109 3/8"=1'-0"

3/A4.2 Int. Elevation
WOMEN 109 3/8"=1'-0"

2/A4.2 Int. Elevation
MEN 110 3/8"=1'-0"

1/A4.2 Int. Elevation
MEN 110 3/8"=1'-0"

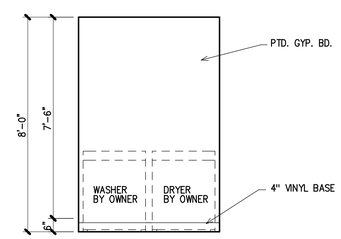

6/A4.2 Int. Elevation
LAUNDRY 111 3/8"=1'-0"

Project
Addition to
Pace Fire Station #4
Pace, Florida

Date:
4/30/24

Project No.
1223

Sheet No.
A4.2

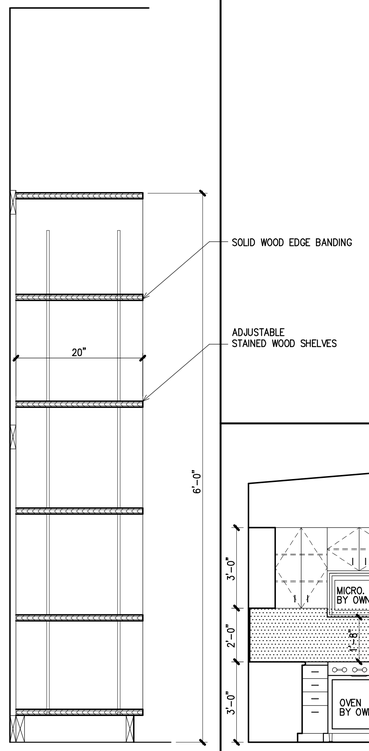

11 A4.3 **Section**
TYP. PANTRY 1"=1'-0"

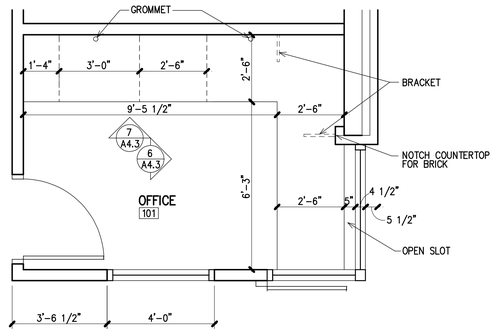

Enlarged Floor Plan
OFFICE 3/8"=1'-0"

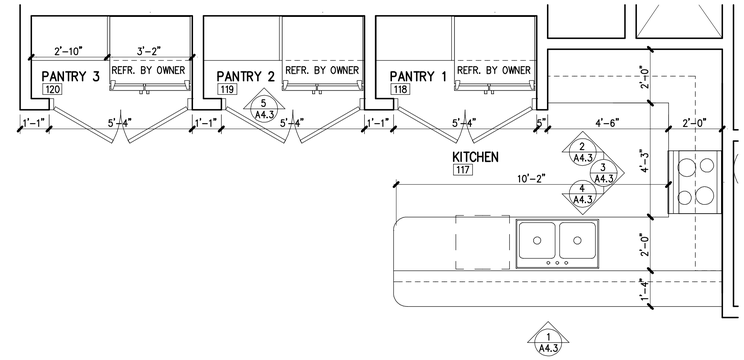

Enlarged Floor Plan
KITCHEN 3/8"=1'-0"

Quina Grundhoefer Architects
400 West Romana Street
850-433-5575
Pensacola, Fl 32502
qg@qgarchitects.com

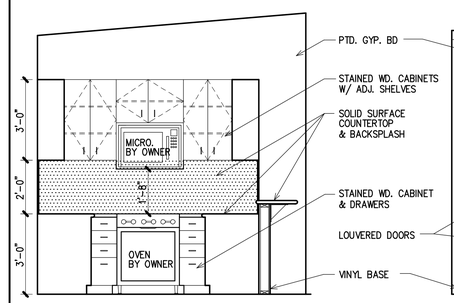

3 A4.3 **Int. Elevation**
KITCHEN 3/8"=1'-0"

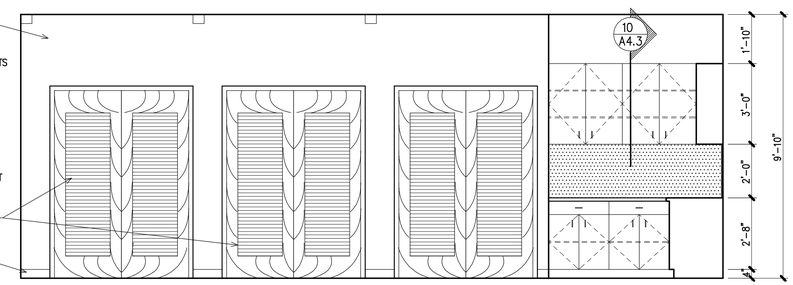

2 A4.3 **Int. Elevation**
KITCHEN 3/8"=1'-0"

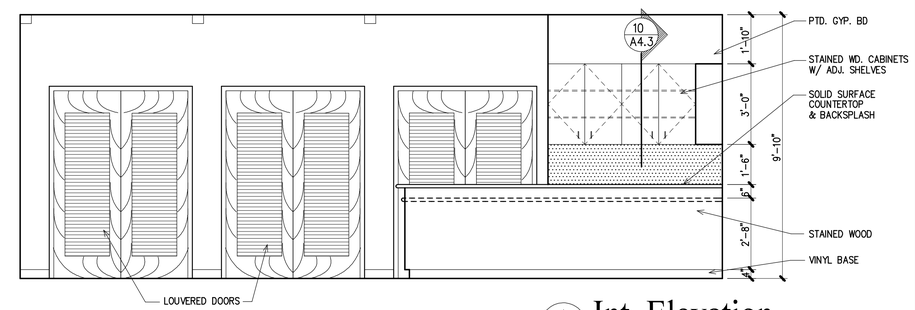

1 A4.3 **Int. Elevation**
KITCHEN 3/8"=1'-0"

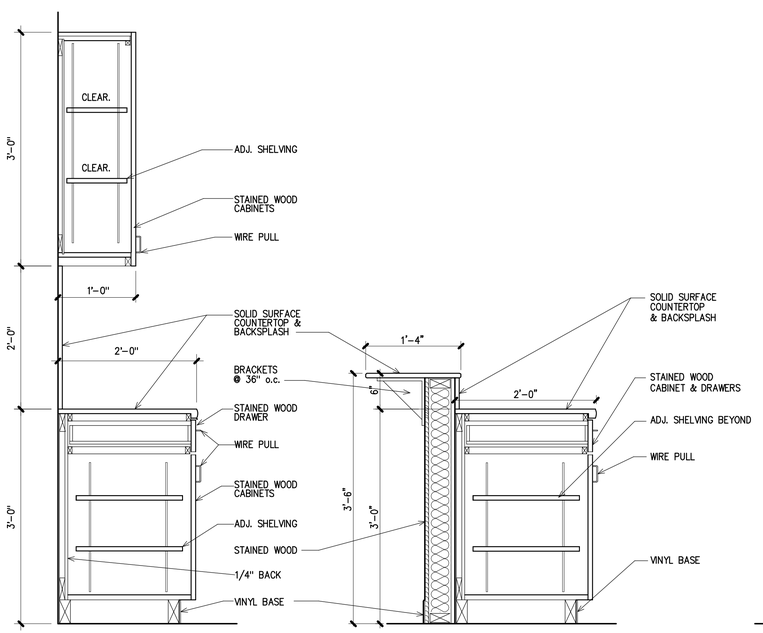

10 A4.3 **Section**
KITCHEN CABINET 1"=1'-0"

9 A4.3 **Section**
KITCHEN CABINET 1"=1'-0"

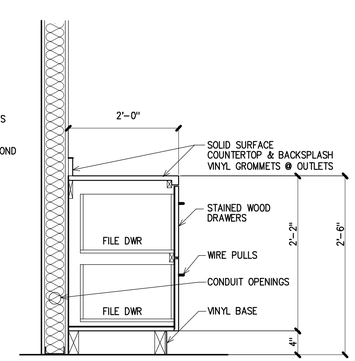

8 A4.3 **Section**
KITCHEN CABINET 1"=1'-0"

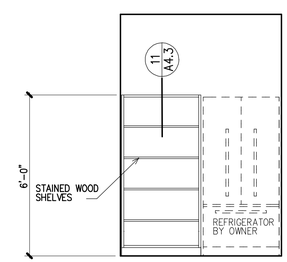

5 A4.3 **Int. Elevation**
ALL 3 PANTRIES 3/8"=1'-0"

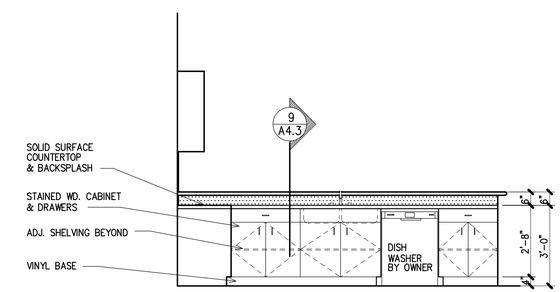

4 A4.3 **Int. Elevation**
KITCHEN 3/8"=1'-0"

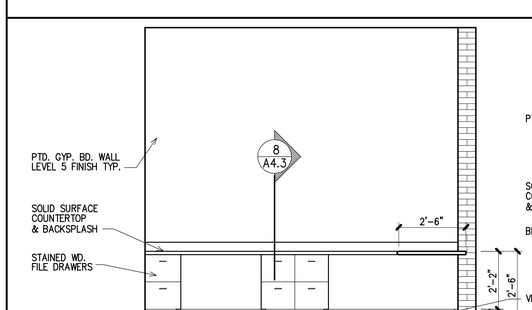

7 A4.3 **Int. Elevation**
OFFICE 3/8"=1'-0"

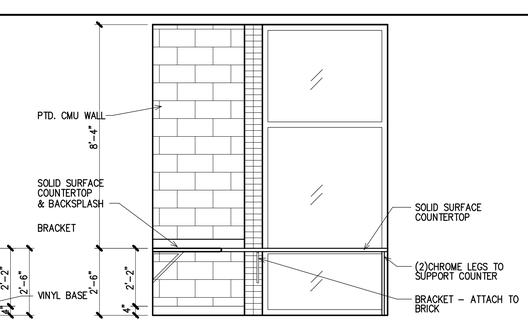

6 A4.3 **Int. Elevation**
OFFICE 3/8"=1'-0"

Project
Addition to
Pace Fire Station #4
Pace, Florida

Date:
4/30/24
Project No.
1223

Sheet No.
A4.3

FINISH SCHEDULE

ROOM NO.	ROOM NAME	FLOOR: CARPET TILE	FLOOR: LUXURY VINYL TILE "A"	FLOOR: LUXURY VINYL TILE "B"	FLOOR: LUXURY VINYL TILE "C"	FLOOR: 12x12 CERAMIC TILE	FLOOR: EXISTING TO REMAIN	FLOOR: WALK OFF MATT	BASE: VINYL	BASE: CERAMIC TILE	BASE: EXISTING TO REMAIN	WALLS: PAINTED GYP. BD.	WALLS: CERAMIC TILE	WALLS: PAINTED CMU	WALLS: PAINTED PLYWOOD	CEILING: PAINTED GYP. BD.	CEILING: ACOUSTIC CLG. TILE	CEILING: OPTIMA ACOUSTIC PANELS	CEILING: EXPOSED CONST.	WINDOW: BLINDS		REMARKS
	FINISH	1	2	3	4	5	6	7	10	11	12	20	21	22	23	30	31	32	32	*		
100	ENTRY		2					7	10			20		22			31					NO BASE AT STOREFRONT
101	OFFICE		2						10			20		22			31					NO BASE AT STOREFRONT
102	EXERCISE		2						10			20		22			31					
103	BUNK 6	1							10			20		22			31			*		
104	BUNK 5	1							10			20		22			31			*		
105	BUNK 4	1							10			20		22			31			*		
106	BUNK 3	1							10			20		22			31			*		
107	BUNK 2	1							10			20		22			31			*		
108	BUNK 1	1							10			20		22			31			*		
109	WOMEN'S RESTROOM					5				11			21			30						
110	MEN'S RESTROOM					5				11			21			30						
111	LAUNDRY		2						10			20				30						
112	HVAC		2						10			20							33			EXPOSED CEILING
113	STORAGE		2						10			20					31					
114	ELECT.		2						10			20					31					
115	SPRINKLER		2						10			20					31					
116	DAY ROOM		2	3	4				10			20		22				32				
117	KITCHEN		2						10			20						32				
118	PANTRY 1		2						10			20				30						
119	PANTRY 2		2						10			20				30						
120	PANTRY 3		2						10			20				30						
121	JANITOR					5				11		20				30						
122	HALLWAY		2						10			20		22			31					
123	CONNECTOR		2														31					NO BASE AT STOREFRONT
124	GEAR STORAGE						6				12				23		31					

* BLINDS TO BE HUNTER DOUGLAS OR EQUAL – DARK BRONZE COLOR

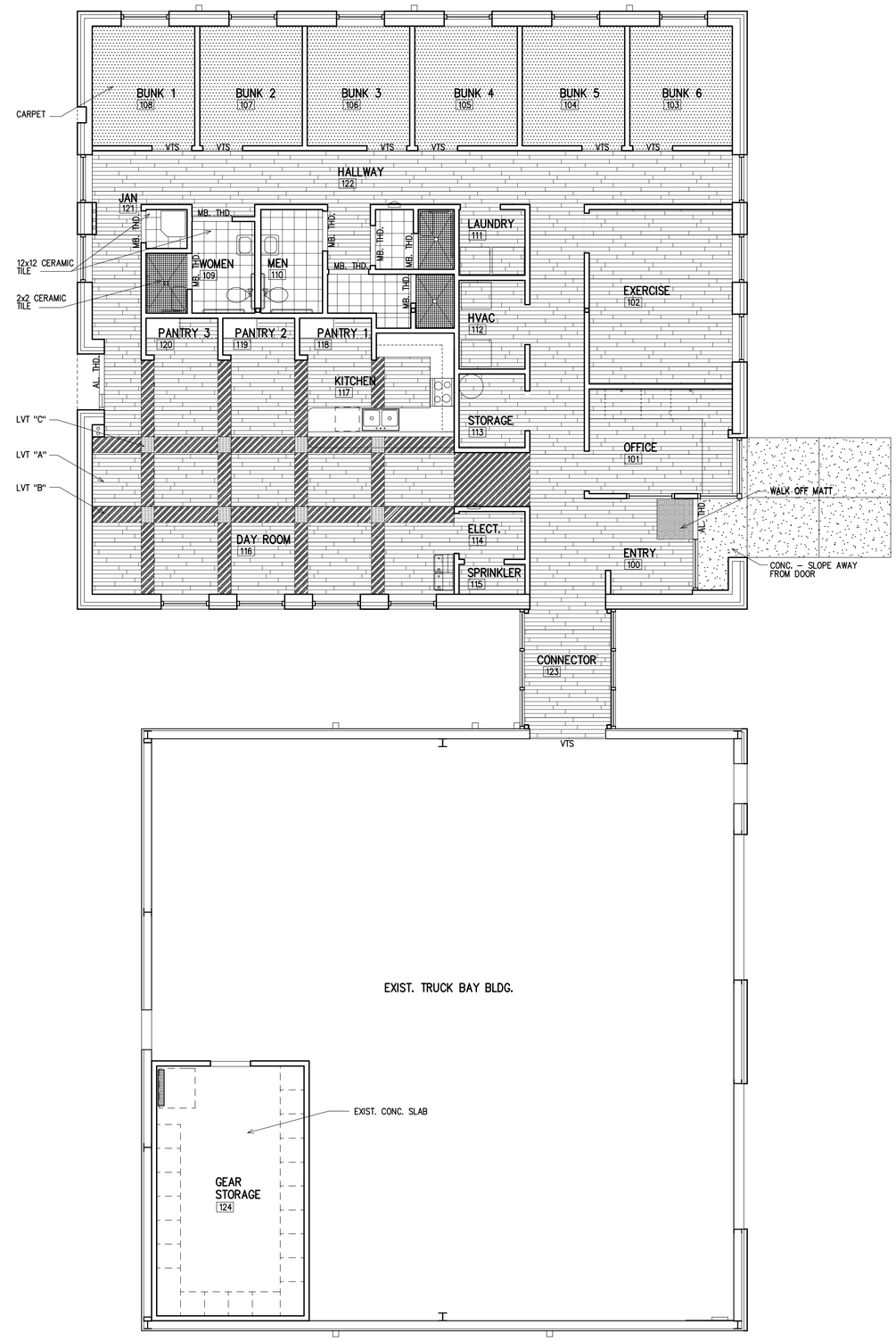

Floor Finishes Plan
3/16"=1'-0"

Quina Grundhoefer Architects

400 West Romana Street Pensacola, Fl 32502
850-433-5575 qg@qgarchitects.com

FLOOR FINISH LEGEND

- LUXURY VINYL TILE (LVT) A
- LUXURY VINYL TILE (LVT) B
- LUXURY VINYL TILE (LVT) C
- CARPET TILE
- 12x12 CERAMIC TILE
- 2x2 CERAMIC TILE
- WALK OFF MATT
- EXISTING TO REMAIN

VTS VINYL TRANSITION STRIP
AL. THD. ALUMINUM THRESHOLD
MB. THD. MARBLE THRESHOLD

Project
Addition to
Pace Fire Station #4
Pace, Florida

Date: 4/30/24
Project No. 1223
Sheet No. A5.1

1.00 GENERAL NOTES

1.01 THESE STRUCTURAL NOTES SHALL BE APPLIED WITH THE TECHNICAL SPECIFICATIONS IN THE SPECIFICATIONS MANUAL. ANY CONFLICTING REQUIREMENTS SHALL BE BROUGHT TO THE ATTENTION OF THE STRUCTURAL ENGINEER-OF-RECORD FOR RESOLUTION BEFORE PROCEEDING WITH FABRICATION OR CONSTRUCTION.

1.02 DRAWINGS SHOW TYPICAL AND CERTAIN SPECIFIC CONDITIONS ONLY. FOR DETAILS NOT SPECIFICALLY SHOWN, PROVIDE DETAILS SIMILAR TO THOSE SHOWN.

1.03 VERIFY ALL EXISTING CONDITIONS, DIMENSIONS AND ELEVATIONS BEFORE STARTING WORK. NOTIFY STRUCTURAL ENGINEER OF ANY DISCREPANCY.

1.04 THE DESIGN, ADEQUACY, AND SAFETY OF ERECTION BRACING, SHORING, TEMPORARY SUPPORTS, ETC., ARE THE SOLE RESPONSIBILITY OF THE CONTRACTOR. TAKE NECESSARY PRECAUTIONS TO PROTECT THE EXISTING STRUCTURE AND ITS FOUNDATION AND TO LIMIT, TO THE EXTENT POSSIBLE, THE EFFECTS OF CONSTRUCTION THAT THE NEW STRUCTURE HAS ON THE EXISTING STRUCTURE.

1.05 COORDINATE STRUCTURAL CONTRACT DOCUMENTS WITH ARCHITECTURAL, MECHANICAL, ELECTRICAL, PLUMBING AND CIVIL. NOTIFY STRUCTURAL ENGINEER OF ANY CONFLICT AND/OR OMISSION. CONTRACTOR SHALL MAKE NO DEVIATION FROM DESIGN DRAWINGS WITHOUT WRITTEN APPROVAL OF THE ARCHITECT. FOR ADDITIONAL OPENINGS NOT SHOWN ON THE STRUCTURAL DRAWINGS, SEE ARCHITECTURAL, MECHANICAL, AND PLUMBING DRAWINGS.

1.06 DESIGN CRITERIA: THE STRUCTURE HAS BEEN DESIGNED UTILIZING THE FOLLOWING REFERENCES:

A. FLORIDA BUILDING CODE, 2023
B. ASCE 7-22, MINIMUM DESIGN LOADS FOR BUILDINGS AND OTHER STRUCTURES
C. ACI 302.1 R-15, CONCRETE FLOOR AND SLAB CONSTRUCTION
D. ACI 318-19, BUILDING CODE REQUIREMENTS FOR STRUCTURAL CONCRETE
E. ACI 360 R-10, DESIGN OF SLABS-ON-GROUND
F. AISC STEEL CONSTRUCTION MANUAL 15TH EDITION
G. TMS 402/602-16, BUILDING CODE REQUIREMENTS AND SPECIFICATION FOR MASONRY STRUCTURES

1.07 DESIGN LOADS

A. DEAD LOADS:
1. MECHANICAL, ELECTRICAL, PLUMBING: 5 PSF
2. CEILINGS AND INSULATION: 5 PSF
3. ROOFING MEMBRANE: 5 PSF

B. LIVE LOADS: (MAY BE REDUCED PER CODE)
1. ROOFS: 20 PSF
2. SLAB-ON-GRADE: 100 PSF

C. WIND LOADS - STRUCTURE HAS BEEN DESIGNED TO CONFORM TO THE WIND PROVISIONS OF ASCE 7-16. SEE WIND PRESSURE DIAGRAM AND CHART FOR DESIGN INFORMATION.

D. EARTHQUAKE LOADS:
1. SEISMIC IMPORTANCE FACTOR (Ie): 1.25
2. OCCUPANCY CATEGORY: III
3. SEISMIC DESIGN CATEGORY: B
4. MAPPED SPECTRAL RESPONSE ACCELERATIONS & PARAMETERS
Ss = 0.073g Sds = 0.078g
S1 = 0.053g Sd1 = 0.085g
5. SITE CLASSIFICATION: D
6. BASIC SEISMIC-FORCE-RESISTING SYSTEM: REINFORCED MASONRY SHEARWALLS
7. DESIGN BASE SHEAR: 2 KIPS
8. SEISMIC RESPONSE COEFFICIENT, Cs = 0.032
9. RESPONSE MODIFICATION FACTOR(S): 3
10. ANALYSIS PROCEDURE USED: EQUIVALENT LATERAL FORCE

REFER TO MEP DWGS FOR SEISMIC SUPPORT AND ATTACHMENT REQUIREMENTS FOR CERTAIN MEP COMPONENTS AS PER THE IBC.

1.08 SHOP DRAWING SUBMITTALS:

A. THE REVIEW OF SUBMITTALS AND/OR SHOP DRAWINGS DONE BY THE STRUCTURAL ENGINEER DOES NOT RELIEVE THE CONTRACTOR OF THE RESPONSIBILITY TO REVIEW AND CHECK SHOP DRAWINGS BEFORE SUBMITTAL TO THE STRUCTURAL ENGINEER. THE REVIEW BY THE STRUCTURAL ENGINEER IS FOR GENERAL CONFORMANCE ONLY. IF SHOP DRAWINGS HAVE NOT BEEN REVIEWED AND APPROVED BEFORE SUBMITTAL TO THE STRUCTURAL ENGINEER, THEY SHALL BE RETURNED WITHOUT APPROVAL.

B. THE CONTRACTOR IS SOLELY RESPONSIBLE FOR ANY AND ALL ERRORS AND OMISSIONS ASSOCIATED WITH THE PREPARATION OF ALL SHOP DRAWINGS AS THEY PERTAIN TO MEMBER SIZES, DETAILS, AND DIMENSIONS SPECIFIED IN THE CONSTRUCTION DOCUMENTS.

C. ALL MODIFICATIONS MADE FOR SUBMITTALS THAT ARE RE-SUBMITTED SHALL CLEARLY NOTE ALL CHANGES.

D. REPRODUCING THE CONTRACT DOCUMENTS FOR USE AS SHOP DRAWINGS IS NOT ALLOWED, AND SHOP DRAWINGS WILL BE RETURNED WITHOUT APPROVAL.

E. GENERAL SHOP DRAWING REQUIREMENTS:
1. SUBMIT SHOP DRAWINGS AND ANY OTHER SPECIAL INFORMATION NECCESSARY FOR PROPER FABRICATION, ERECTION, AND PLACEMENT OF STRUCTURAL FABRICATIONS. INCLUDE PLANS, ELEVATIONS, AND SECTIONS. CLEARLY SHOW ANCHORAGES, CONNECTIONS, AND ACCESSORY ITEMS. THE DETAILER MUST INTERPRET THE CONTRACT DOCUMENTS AND CLEARLY CONVEY THIS INTERPRETATION TO THE FIELD IN THE FORM OF PLACING OR ERECTION DRAWINGS.
2. CONCRETE REINFORCING DETAILER - PROVIDE PLACING DRAWINGS FOR FABRICATION AND PLACING OF REINFORCING STEEL. THESE DRAWINGS SHALL INCLUDE, BUT ARE NOT LIMITED TO, THE FOLLOWING: BAR LISTS, SCHEDULES, BENDING DETAILS, PLACING DETAILS, PLACING PLANS, AND PLACING ELEVATIONS. CLEARLY SHOW FOUNDATION REINFORCING. INDICATE BAR LENGTHS, LOCATION AND SPLICES OF CONTINUOUS BARS, AND BAR SUPPORTS. CLEARLY SHOW LOCATIONS OF ALL DOWELS ON PLAN.

1.09 SHOP DRAWINGS BY SPECIALTY ENGINEER:

A. THE FOLLOWING SYSTEMS AND COMPONENTS AS A MINIMUM REQUIRE SPECIALTY ENGINEERED ERECTION AND FABRICATION DRAWINGS WITH INPUT BY A SPECIALTY ENGINEER, BUT ARE NOT LIMITED TO: WINDOW SYSTEMS, STOREFRONT SYSTEM, ROOF TRUSS SYSTEMS, AWNINGS, LOUVERS, LADDERS, AND ALL EXTERIOR SOFFIT FRAMING.
B. THE SPECIALTY ENGINEER OR SUPPLIER SHALL DESIGN AND INSTALL THEIR COMPLETED SYSTEM IN ITS ENTIRETY TO THE PRIMARY STRUCTURE PER THE CRITERIA NOTED ON THESE CONSTRUCTION DOCUMENTS. THE SPECIALTY ENGINEER SHALL ADHERE TO ALL REQUIREMENTS OF THE APPLICABLE BUILDING CODE OR THESE NOTES, WHICHEVER IS MORE STRINGENT.
C. SHOP DRAWINGS SHALL BE PROVIDED TO THE ARCHITECT/E.O.R. AND CALCULATIONS SHALL REQUIRE THE SEAL, DATE, AND SIGNATURE OF THE SPECIALTY ENGINEER REGISTERED IN THE PROJECT STATE.

2.00 FOUNDATIONS AND SLAB-ON-GRADE

2.01 THE DESIGN OF FOUNDATIONS AND SLAB ON GRADE IS BASED ON THE CRITERIA ESTABLISHED IN THE GEOTECHNICAL REPORT BY NOVA ENGINEERING AND ENVIRONMENTAL LLC (NOVA), PENSACOLA, FL; FILE # 10116-2023312, DATED DECEMBER 18, 2023. THE RECOMMENDATIONS OF THAT REPORT SHALL BE CONSIDERED AN INTEGRAL PART OF THE CONTRACT DOCUMENTS.

2.02 THE TYPICAL SHALLOW FOUNDATIONS HAVE BEEN DESIGNED FOR AN ALLOWABLE SOIL BEARING PRESSURE OF 2,000 PSF.

2.03 A QUALIFIED GEOTECHNICAL ENGINEER SHALL VERIFY CONDITION AND/OR ADEQUACY OF ALL SUBGRADES, FILLS AND BACKFILLS BEFORE PLACEMENT OF FOUNDATIONS, FOOTINGS, SLABS, WALLS, FILLS, BACKFILLS, ETC. SHOULD THE CONTRACTOR FIND UNDESIRABLE SOILS, HE SHALL STOP WORK AND IMMEDIATELY CONTACT THE ENGINEER OF RECORD. ALL FOOTINGS SHALL REST EITHER ON UNDISTURBED SOIL OR A MANUALLY OPERATED VIBRATORY SLED OR TAMPER SHOULD BE USED TO DENSIFY ANY SOILS IN THE BOTTOM OF THE FOOTING TRENCHES LOOSENED DURING THE EXCAVATION OPERATION.

2.04 SIDES OF FOUNDATIONS SHALL BE FORMED UNLESS CONDITIONS PERMIT EARTH FORMING. FOUNDATIONS POURED AGAINST THE EARTH REQUIRE THE FOLLOWING PRECAUTIONS: SLOPE SIDES OF EXCAVATIONS AS APPROVED BY GEOTECHNICAL ENGINEER AND CLEAN UP SLOUGHING BEFORE AND DURING CONCRETE PLACEMENT.

2.05 CONTRACTOR IS RESPONSIBLE FOR ADEQUATELY PROTECTING ALL EXCAVATION SLOPES.

2.06 WHERE FOOTING STEPS ARE NECESSARY, THEY SHALL BE NO STEEPER THAN ONE VERTICAL TO TWO HORIZONTAL.

2.07 SLAB-ON-GRADE REQUIREMENTS:

A. UNLESS NOTED OTHERWISE, THE SLAB-ON-GRADE SHALL BE A MINIMUM OF:
4 INCHES THICK, PLACED ON COMPACTED SUBGRADE, AND REINFORCED WITH 6x6 W2.9xW2.9 WWF IN FLAT SHEETS (ROLLS ARE NOT PERMITTED). PROVIDE POSITIVE SUPPORT 2½" CLEAR FROM BOTTOM OF SLAB. LAP MESH 12".

MACRO SYNTHETIC FIBER ALTERNATE ALLOWED SUCH AS FORTA FERRO AT 3 LBS. PER YARD (FORTA FERRO OR EQUIV.). (PROPERLY DESIGNED FIBER REINFORCED CONCRETE MAY BE SUBSTITUTED FOR MESH, SUBJECT TO PRIOR APPROVAL.)

B. PLACE CONTROL OR CONSTRUCTION JOINTS AT LOCATIONS INDICATED BY "C.J." IF NOT INDICATED, LOCATED JOINTS AT COLUMN CENTERLINES AND AT 12'-0" O.C MAX. SAWCUT CONTROL JOINTS AS SOON AFTER POURING AS POSSIBLE, WHEN CONCRETE WILL NOT RAVEL; 12 HRS. MAX. CURE CONCRETE IN ACCORDANCE WITH ACI 301. BEGIN CURING IMMEDIATELY AFTER POURING TO LIMIT CRACKING PRIOR TO SAWCUTTING CONTROL JOINTS.

C. SUBGRADE SHALL BE PREPARED AS RECOMMENDED IN THE GEOTECHNICAL REPORT.

D. SEE SPECIFICATIONS FOR VAPOR RETARDER MATERIAL. VAPOR RETARDER SHALL BE A MINIMUM 15 MIL THICKNESS AND CONFORM TO ASTM E1745, CLASS A, B, OR C. THE VAPOR RETARDER SHOULD BE PLACED OVER THE PREPARED SUBGRADE. TO REDUCE THE POSSIBILITY OF PUNCTURE WHEN THE VAPOR RETARDER IS TO BE PLACED OVER A ROUGH GRANULAR FILL LAYER, PROVIDE A THIN LAYER OF APPROXIMATELY 1/2 INCH OF FINE-GRADED MATERIAL ROLLED OR COMPACTED OVER THE GRANULAR FILL LAYER PRIOR TO INSTALLATION OF THE VAPOR RETARDER. VAPOR RETARDER SHOULD BE OVERLAPPED 8 IN. AND TAPED AT THE JOINTS AND CAREFULLY FITTED AROUND SERVICE OPENINGS.

3.00 REINFORCED CONCRETE

3.01 ALL CONCRETE WORK SHALL CONFORM TO ACI 301-16, SPECIFICATIONS FOR STRUCTURAL CONCRETE. DESIGN IS BASED ON ACI 318-14, BUILDING CODE REQUIREMENTS FOR STRUCTURAL CONCRETE. DETAIL CONCRETE REINFORCEMENT AND ACCESSORIES IN ACCORDANCE WITH ACI 315R-18, GUIDE TO PRESENTING REINFORCING STEEL DESIGN DETAILS. DETAIL ALL CONCRETE WALLS AND BEAMS ON THE SHOP DRAWINGS IN ELEVATION UNLESS SPECIFICALLY APPROVED OTHERWISE. SUBMIT SHOP DRAWINGS FOR APPROVAL, SHOWING ALL FABRICATION DIMENSIONS AND LOCATIONS FOR PLACING REINFORCING STEEL AND ACCESSORIES. DO NOT BEGIN FABRICATION UNTIL SHOP DRAWINGS ARE COMPLETED AND REVIEWED.

3.02 UNLESS NOTED OTHERWISE, ALL CONCRETE SHALL BE NORMAL WEIGHT AND HAVE THE FOLLOWING MINIMUM 28 DAY COMPRESSIVE STRENGTHS (Fc'), WATER TO CEMENTITIOUS CONTENT (W/CM) AND AIR CONTENT ACCORDING TO EXPOSURE CLASS (EC):

	Fc'	MAX. W/CM	AIR CONTENT
A. FOUNDATIONS (EC)-F0, S0, W0, C0)	3500 PSI	0.50	N/A
B. SLAB-ON-GRADE (EC-F2, S0, W0, C0)	4500 PSI	0.45	6% (+/-1%)
C. BEAMS – EXTERIOR (EC-F2, S0, W0, C0)	4500 PSI	0.45	6% (+/-1%)
D. COLUMNS AND SHEAR WALLS (EC-F2, S0, W0, C0)	4500 PSI	0.45	6% (+/-1%)

CONCRETE MAY CONTAIN A PROPERLY DESIGNED SUPERPLASTICIZER FOR WORKABILITY.

3.03 REINFORCING STEEL SHALL CONFORM TO ASTM A615, GRADE 60 UNLESS NOTED OTHERWISE.

3.04 THE PROPOSED MATERIALS AND MIX DESIGN SHALL BE FULLY DOCUMENTED AND REVIEWED BY THE OWNER'S TESTING LABORATORY. RESPONSIBILITY FOR OBTAINING THE REQUIRED DESIGN STRENGTH IS THE CONTRACTOR'S.

3.05 USE OF CALCIUM CHLORIDE, CHLORIDE IONS, OR OTHER SALTS IN CONCRETE IS NOT PERMITTED.

3.06 HORIZONTAL CONSTRUCTION JOINTS ARE PERMITTED ONLY WHERE INDICATED. THE STRUCTURAL ENGINEER SHALL APPROVE THE LOCATION OF VERTICAL CONSTRUCTION JOINTS. CONSTRUCTION JOINTS SHALL BE THOROUGHLY ROUGHENED BY MECHANICAL MEANS AND CLEANED. CONTRACTOR SHALL SUBMIT DRAWINGS SHOWING INTENDED POURING SEQUENCE AND LOCATION OF CONSTRUCTION JOINT TO THE ENGINEER FOR REVIEW. PROPOSED METHODS MUST BE ACCEPTABLE TO THE ARCHITECT BEFORE USE.

3.07 CHAMFER OR ROUND ALL EXPOSED CORNERS A MINIMUM OF 3/4".

3.08 TIE ALL REINFORCING STEEL AND EMBEDMENTS SECURELY IN PLACE PRIOR TO PLACING CONCRETE. PROVIDE SUFFICIENT SUPPORTS TO MAINTAIN THE POSITION OF REINFORCEMENT WITHIN SPECIFIED TOLERANCE DURING ALL CONSTRUCTION ACTIVITIES. "STICKING" DOWELS INTO WET CONCRETE IS NOT PERMITTED.

3.09 PROVIDE CONTINUOUS REINFORCEMENT WHEREVER POSSIBLE; SPLICE ONLY AS SHOWN OR APPROVED; STAGGER SPLICE WHERE POSSIBLE; USE FULL TENSION SPLICE (CLASS "B") UNLESS NOTED OTHERWISE. DOWELS SHALL MATCH THE SIZE AND SPACING OF THE SPECIFIED REINFORCEMENT AND SHALL BE LAPPED WITH FULL TENSION SPLICES (CLASS "B") UNLESS NOTED OTHERWISE. TERMINATE BARS WITH STANDARD HOOKS.

3.10 REINFORCING STEEL SHALL HAVE THE FOLLOWING CONCRETE COVER UNLESS NOTED OTHERWISE (PER ACI 318-14 TABLE 20.6.1.3.1):

A. CONCRETE AGAINST EARTH (NOT FORMED): 3"

B. FORMED CONCRETE:
1. #6 THROUGH #18 BARS: 2"
2. #5 BARS AND SMALLER: 1-1/2"

3.11 DO NOT WELD OR TACK WELD REINFORCING STEEL UNLESS APPROVED OR DIRECTED BY THE STRUCTURAL ENGINEER.

3.12 THE DESIGN AND CONSTRUCTION OF FORMS AND SHORES SHALL CONFORM TO THE FOLLOWING REQUIREMENTS:

A. FORMS SHALL CONFORM TO SHAPE, FORM AND LINES ON DRAWINGS.
B. ADEQUATE BRACING SHALL BE USED.
C. FORMS SUPPORTED ON GROUND SHALL HAVE ADEQUATE MUDSILLS.
D. QUALIFIED WORKMEN SHALL CONSTANTLY OBSERVE AND ADJUST, AS REQUIRED, ALL SHORES DURING CONCRETE PLACING.
E. THE CONTRACTOR SHALL BE SOLELY RESPONSIBLE FOR THE ADEQUATE DESIGN AND CONSTRUCTION OF ALL FORMS.
F. SPECIAL ATTENTION IS DIRECTED TO THE REQUIREMENT THAT THE CONTRACTOR MUST ADJUST THE SHORING, USING SURVEYING INSTRUMENTS, DURING AND IMMEDIATELY AFTER PLACING OF CONCRETE FOR SLABS; THIS ADJUSTMENT MUST NOT BE ATTEMPTED AFTER THE INITIAL SET OF CONCRETE.

3.13 SHORING SHALL REMAIN IN PLACE UNTIL CONCRETE HAS ATTAINED 75% OF ITS 28-DAY STRENGTH.

3.14 THE LICENSED DESIGN PROFESSIONAL, A PERSON UNDER THE SUPERVISION OF A LICENSED DESIGN PROFESSIONAL, OR A QUALIFIED INSPECTOR SHALL VERIFY COMPLIANCE WITH CONSTRUCTION DOCUMENTS. (ACI 318-19)

3.15 FOR CONCRETE PADS SEE ARCHITECTURAL, MECHANICAL AND ELECTRICAL DRAWINGS.

4.00 STRUCTURAL STEEL, STEEL DECK

4.01 STRUCTURAL STEEL SHALL BE DETAILED, FABRICATED AND ERECTED ACCORDING TO AISC 360-10 SPECIFICATION FOR STRUCTURAL STEEL BUILDINGS.

4.02 SUBMIT SHOP DRAWINGS PREPARED IN ACCORDANCE WITH AISC MANUAL "DETAILING FOR STEEL CONSTRUCTION", LATEST EDITION. STEEL FABRICATOR SHALL SUPPLY ANCHOR BOLT LOCATION DRAWINGS. DO NOT BEGIN FABRICATION UNTIL SHOP DRAWINGS ARE COMPLETED AND REVIEWED.

4.03 STRUCTURAL STEEL WIDE FLANGE SHAPES SHALL CONFORM TO ASTM A992. STRUCTURAL STEEL SHAPES, ANGLES, AND CHANNELS SHALL CONFORM TO ASTM A36 UNLESS NOTED OTHERWISE. STEEL CONNECTION, GUSSET AND BASE PLATES SHALL CONFORM TO ASTM A572, GRADE 50. HOLLOW STRUCTURAL STEEL SHAPES SHALL CONFORM TO ASTM A500, GRADE C, FY = 50 KSI, UNLESS NOTED OTHERWISE.

4.04 BOLTS SHALL CONFORM TO ASTM F3125 A325 OR A490, 3/4-INCH DIAMETER MINIMUM, UNLESS NOTED OTHERWISE. BOLTS IN BEARING CONNECTIONS SHALL BE DESIGNATED TYPE N, TENSIONED, SNUG-TIGHT AS DEFINED BY AISC. BOLTS IN MOMENT CONNECTIONS AND IN TRUSSES SHALL BE DESIGNATED SLIP-CRITICAL (SC). FULLY TENSION SLIP-CRITICAL CONNECTIONS WITH DIRECT TENSION INDICATOR WASHERS INSTALLED IN ACCORDANCE WITH THE MANUFACTURER'S INSTRUCTION.

4.05 ALL ANCHOR BOLTS: ASTM F 1554, GRADE 55, WITH WELDABLE, STRAIGHT NUTS: ASTM A 563 (ASTM A 563M) HEAVY-HEX CARBON STEEL, PLATE WASHERS: ASTM A 36/A 36M CARBON STEEL, WASHERS: ASTM F 436 (ASTM F 436M), TYPE 1, HARDENED CARBON STEEL. FINISH: HOT-DIP ZINC COATING, ASTM A 153/A 153M, CLASS C MECHANICALLY DEPOSITED ZINC COATING, ASTM B 695, CLASS 50.

4.06 ALL COLUMNS, UNLESS NOTED OTHERWISE, SHALL BEAR ON 1 ½" GROUT BED. GROUT SHALL BE NON-SHRINK, NON-METALLIC AND SHALL BE PLACED PRIOR TO POURING OF UPPER FLOOR LEVELS.

4.07 HEADED STUD SHEAR CONNECTORS (INDICATED AS "HS" ON PLANS): ASTM A 108, GRADES 1010 THROUGH 1020, HEADED-STUD TYPE, COLD-FINISHED CARBON STEEL; AWS D1.1, TYPE B. USE AUTOMATIC END WELDING OF HEADED-STUD SHEAR CONNECTORS ACCORDING TO AWS D1.1 AND MANUFACTURER'S WRITTEN INSTRUCTIONS.

4.08 DEFORMED BAR ANCHORS (INDICATED AS "DBA" ON PLANS): DEFORMED STEEL REINFORCING BARS IN ACCORANCE WITH ASTM A-706 (GRADE 420) SPECIFICATIONS, YIELD STRENGTH 70 KSI. USE AUTOMATIC END WELDING OF HEADED-STUD SHEAR CONNECTORS ACCORDING TO AWS D1.1 AND MANUFACTURER'S WRITTEN INSTRUCTIONS.

4.09 USE PRE-QUALIFIED WELDED JOINTS AS PER AISC, AND AWS D1.1 "STRUCTURAL WELDING CODE." USE ONLY CERTIFIED WELDERS; ALL ELECTRODES SHALL CONFORM TO AWS A5 GRADE E70XX. BARE ELECTRODE AND GRANULAR FLUX SHALL CONFORM TO AWS A5, F70 AWS FLUX CLASSIFICATION. MINIMUM WELD SIZE TO BE 3/16" FILLET WELD, U.N.O.

4.10 CUTS, BOLTS, COPING, ETC. REQUIRED FOR WORK OR OTHER TRADES SHALL BE SHOWN ON THE SHOP DRAWINGS AND MADE IN THE SHOP. CUTS OR BURNING HOLES IN STRUCTURAL STEEL MEMBERS IN THE FIELD WILL NOT BE PERMITTED.

4.11 SHOP CONNECTIONS NOT SPECIFICALLY DETAILED ON THE DRAWINGS MAY BE WELDED OR BOLTED. FIELD CONNECTIONS NOT SPECIFICALLY DETAILED ON THE DRAWINGS SHALL BE BOLTED, WHERE POSSIBLE.

4.12 WHEN SPECIFICALLY NOT DETAILED ON THE DESIGN DRAWINGS PROVIDE THE FOLLOWING BEAM CONNECTIONS:

A. USE TWO-SIDE ANGLE CONNECTIONS PER AISC SPECIFICATIONS, LATEST EDITION.
B. WHERE BEAM REACTIONS ARE SHOWN, CONNECTIONS SHALL DEVELOP THE REACTION GIVEN.
C. WHEN BEAM REACTIONS ARE NOT SHOWN, CONNECTIONS SHALL BE DESIGNED TO SUPPORT ONE HALF THE TOTAL UNIFORM LOAD CAPACITIES SHOWN IN THE ALLOWABLE UNIFORM LOAD TABLES, PARTS 2 OF THE AISC MANUAL, FOR THE GIVEN BEAM, SPAN, AND GRADE OF STEEL SPECIFIED.
D. WHERE REACTIONS ARE SUBJECT TO ECCENTRICITY, SUCH ECCENTRICITY SHALL BE TAKEN INTO ACCOUNT.

4.13 FIELD SPLICES SHALL BE DESIGNED TO DEVELOP THE FULL CAPACITY OF MEMBER AT THE POINT OF SPLICE IN BENDING, SHEAR AND AXIAL LOAD (COMPRESSION AND TENSION).

4.14 ALTERNATE CONNECTION DETAILS MAY BE USED IF SUCH DETAILS ARE SUBMITTED TO THE ENGINEER FOR REVIEW AND ACCEPTANCE IS GRANTED. HOWEVER, THE ENGINEER SHALL BE THE SOLE JUDGE OF ACCEPTABILITY AND THE CONTRACTOR'S BID SHALL ANTICIPATE THE USE OF THE SPECIFIC DETAILS SHOWN ON THE DRAWINGS. IN ANY EVENT, THE CONTRACTOR SHALL BE RESPONSIBLE FOR THE DESIGN OF SUCH ALTERNATE DETAILS, WHICH HE PROPOSES.

4.15 PROVIDE STIFFENER PLATES ON EACH SIDE OF WEB OF BEAM OR GIRDER AT POINTS OF CONCENTRATED LOADS. MINIMUM STIFFENER PLATE THICKNESS SHALL BE 1/2" OR FLANGE THICKNESS OF COLUMNS ABOVE OR BELOW, WHICHEVER IS THICKER.

4.16 FILLER BEAMS SHOULD BE SPACED EQUALLY BETWEEN THE COLUMNS IF NOT SHOWN OTHERWISE ON THE DRAWINGS.

Quina Grundhoefer Architects

400 West Romana Street Pensacola, Fl 32502
850 433-5575 fax 850 433-5366 qg@qgarchitects.com

JDA JOE DEREUIL ASSOCIATES, LLC
STRUCTURAL ENGINEERS
STATE OF FLORIDA
P.E. NO. 54319 / C.A. NO. 9515
301 West Cervantes St. Tel. 850.429.1951
Pensacola, FL 32501 Fax. 850.429.0158

JOHN JOSEPH DEREUIL CERTIFICATE No. 54319 STATE OF FLORIDA REGISTERED ENGINEER 4/30/2024

Project
Addition to
Pace Fire Station #4
Pace, Florida

Date: 4/30/2024
Project No. 1223
Sheet No. S0.1

4.17 PROVIDE TEMPORARY BRACING OF STRUCTURAL FRAMING TO PROVIDE LATERAL SUPPORT UNTIL ALL PERMANENT BRACING MOMENT CONNECTIONS AND FLOOR AND ROOF DECKS (DIAPHRAGMS) ARE COMPLETELY INSTALLED.

4.18 STRUCTURAL DRAWINGS SHALL BE USED IN CONJUNCTION WITH ARCHITECTURAL AND MECHANICAL DRAWINGS AND DRAWINGS RELATED TO OTHER TRADES. CONTRACTOR SHALL BE RESPONSIBLE TO CHECK AND COORDINATE DIMENSIONS, CLEARANCES, ETC. WITH THE WORK OF OTHER TRADES. THE STRUCTURAL STEEL CONTRACTOR SHALL PROVIDE FRAMING AROUND OPENINGS IN FLOOR AND ROOF SLAB AS INDICATED IN THE MECHANICAL AND ARCHITECTURAL DRAWINGS.

4.19 THE STRUCTURAL STEEL CONTRACTOR SHALL PROVIDE WEB REINFORCEMENT AT OPENINGS IN STEEL BEAMS AND GIRDERS FOR MECHANICAL AND ELECTRICAL PENETRATIONS. WEB OPENINGS SHALL BE LOCATED IN THE MIDDLE 1/3 OF BEAM DEPTH. WEB REINFORCEMENT IS NOT REQUIRED FOR WEB OPENINGS LESS THAN 4" DIAMETER OR 3" X 3". A MAXIMUM OF ONE WEB OPENING IS PERMITTED FOR EACH BEAM NOT HAVING WEB REINFORCEMENT.

4.20 STRUCTURAL STEEL CONTRACTOR SHALL COORDINATE THE BOTTOM OF BASE PLATE ELEVATION WITH THE TOP OF CONCRETE ELEVATION. IN CASE OF CONFLICT, THE CONTRACTOR SHALL MAKE ALLOWANCE IN HIS BID FOR MORE STRINGENT REQUIREMENTS.

4.21 PAINT STRUCTURAL STEEL IN ACCORDANCE WITH THE PROJECT SPECIFICATIONS. DO NOT PAINT STEEL SURFACES TO BE ENCASED IN CONCRETE OR RECEIVE SPRAYED ON FIREPROOFING, CONNECTIONS DESIGNATED AS SLIP CRITICAL, OR TO BE WELDED.

4.22 PRIMER: SSPC-PAINT 25, TYPE I, ZINC OXIDE, ALKYD, LINSEED OIL PRIMER.

4.23 FABRICATION AND ERECTION OF STEEL DECKING SHALL CONFORM TO THE LATEST EDITION OF THE STEEL DECK INSTITUTE'S (SDI) "SPECIFICATION AND COMMENTARY FOR COMPOSITE STEEL FLOOR DECK, NON-COMPOSITE STEEL DECK, AND STEEL ROOF DECK" AS APPLICABLE TO THIS PROJECT.

4.24 MATERIAL FOR STEEL DECKING SHALL CONFORM TO ASTM A1008 OR A653 WITH 50 KSI MINIMUM YEILD STRENGTH. SEE DRAWINGS FOR STEEL DECK TYPE, GAUGE, AND SECTION PROPERTIES.

4.25 ROOF DECK SHALL BE TYPE B, WIDE RIB.

4.26 UNLESS NOTED OTHERWISE ALL STEEL DECKING SHALL HAVE A GALVANIZED COATING CONFORMING TO ASTM A653, G90

4.27 STEEL ROOF DECK ANCHORAGE (UNLESS NOTED OTHERWISE ON PLANS OR DETAILS):

A. ANCHOR DECK TO SUPPORTING STRUCTURE AT ALL EDGE RIBS PLUS INTERIOR RIBS AT A MAXIMUM SPACING OF 6 INCHES USING THE FOLLOWING:

1. WHEN BASE STEEL THICKNESS IS 3/8" OR LESS, USE #12 SELF-TAPPING HEX WASHER HEAD SCREWS (OR APPROVED EQUAL) OR X-EDN19 THQ12 POWDER ACTUATED FASTENERS BY HILTI (OR APPROVED EQUAL).

2. WHEN BASE STEEL THICKNESS EXCEEDS 3/8", IT IS THE CONTRACTOR'S OPTION TO PRE-DRILL AND USE #12 HEX WASHER HEAD SCREWS (OR APPROVED EQUAL) OR TO USE HILTI X-ENP-19 L15 POWDER ACTUATED FASTENERS (OR APPROVED EQUAL).

B. FASTEN SIDE LAPS OF ADJACENT UNITS AT A MAXIMUM SPACING OF 12 INCHES WITH #10 SELF-TAPPING SCREWS.

4.28 PROVIDE DECKING CONTINUOUS OVER 3 SPANS MINIMUM WHERE SUPPORTING STRUCTURE PERMITS.

4.29 STEEL DECKING SHALL BE ERECTED IN STRICT COMPLIANCE WITH THE MANUFACTURER'S RECOMMENDATIONS

5.00 MASONRY

5.01 CONCRETE MASONRY DESIGN, CONSTRUCTION AND TESTING SHALL CONFORM TO TMS 402/602-16, BUILDING CODE REQUIREMENTS AND SPECIFICATION FOR MASONRY STRUCTURES.

5.02 PROVIDE LIGHTWEIGHT, HOLLOW, LOAD-BEARING CONCRETE MASONRY UNITS (CMU) CONFORMING TO ASTM C90, UNLESS NOTED OTHERWISE.

5.03 PROVIDE MASONRY CONSTRUCTION WITH MINIMUM COMPRESSIVE STRENGTH, f'_m = 2,000 PSI.

5.04 PROVIDE TYPE "M" OR "S" MORTAR IN ACCORDANCE WITH ASTM C270 BY PROPORTION REQUIREMENTS, UNLESS NOTED OTHERWISE.

5.05 VERTICAL CELLS SHALL BE REINFORCED WITH #5 AT 24" O.C. MINIMUM, UNLESS NOTED OTHERWISE (U.N.O.) IN THE CONTRACT DRAWINGS. VERTICAL REINFORCING SHALL BE CONTINUOUS (LAPPED 48 BAR DIAMETERS MINIMUM AT SPLICES, U.N.O.) AND HELD IN POSITION AT THE TOP AND BOTTOM OF THE GROUT POUR. U.N.O., POSITION VERTICAL REINFORCING IN THE CENTER OF THE CELL.

5.06 PROVIDE GROUT FOR REINFORCED MASONRY IN ACCORDANCE WITH ASTM C476. GROUT SHALL HAVE A MINIMUM 28 DAY COMPRESSIVE STRENGTH OF 3,000 PSI UNLESS NOTED OTHERWISE. GROUT SHALL BE FLUID CONSISTENCY. FLUID CONSISTENCY SHALL MEAN THAT CONSISTENCY IS AS FLUID AS POSSIBLE FOR POURING WITHOUT SEGREGATION OF THE CONSTITUENT PARTS. FILL ALL CELLS BELOW GRADE WITH GROUT. ALL GROUT SHALL BE CONSOLIDATED AT THE TIME OF POURING BY VIBRATING AND THEN RECONSOLIDATED BY AGAIN PUDDLING LATER, BEFORE PLASTICITY IS LOST. WHEN GROUTING IS STOPPED FOR ONE HOUR OR LONGER, CONSTRUCTION JOINTS SHALL BE FORMED BY STOPPING THE POUR OF THE GROUT 1-1/2 INCHES BELOW THE TOP OF THE UPPERMOST UNIT.

5.07 PROVIDE HORIZONTAL JOINT REINFORCEMENT COMPLYING WITH ASTM A82, NO. 9 GAUGE OR HEAVIER, ZINC COATED, PLACED 16 INCHES ON CENTER UNLESS NOTED OTHERWISE.

5.08 PROVIDE RUNNING BONDS WITH VERTICAL JOINTS LOCATED AT CENTER OF MASONRY UNITS IN THE ALTERNATE COURSE BELOW, UNLESS NOTED OTHERWISE.

5.09 ALL MASONRY UNITS SHALL BE FREE OF EXCESSIVE DUST AND DIRT AT THE TIME THEY ARE LAYED BY THE MASON.

5.10 ALL REINFORCED HOLLOW UNIT MASONRY SHALL BE BUILT TO PRESERVE THE UNOBSTRUCTED VERTICAL CONTINUITY OF THE CELLS TO BE FILLED. WALLS AND CROSS WEBS IN ALL REINFORCED MASONRY WALLS SHALL BE FULLY BEDDED IN MORTAR. ALL HEAD (OR END) JOINTS SHALL BE SOLIDLY FILLED WITH MORTAR FOR A DISTANCE IN FROM EACH FACE OF THE UNIT NOT LESS THAN THE THICKNESS OF THE LONGITUDINAL FACE SHELLS, BOND SHALL BE PROVIDED BY LAPPING UNITS IN SUCCESSIVE VERTICAL COURSES.

5.11 PROVIDE VERTICAL CONTROL JOINTS BETWEEN REINFORCED MASONRY WALLS AND MASONRY PARTITION WALLS, AND AT A MINIMUM OF 20'-0" O.C.

6.00 POST-INSTALLED ANCHORS

6.01 EXCEPT WHERE INDICATED ON THE DRAWINGS, POST-INSTALLED ANCHORS SHALL CONSIST OF THE FOLLOWING ANCHOR TYPES AS PROVIDED BY HILTI, INC. CONTACT HILTI AT (800) 879-8000 FOR PRODUCT RELATED QUESTIONS.

a) ANCHORAGE TO CONCRETE

i) ADHESIVE ANCHORS FOR CRACKED AND UNCRACKED CONCRETE USE:
(1) HILTI HIT-HY 200 SAFE SET SYSTEM WITH HILTI HIT-Z ROD PER ICC ESR-3187.
(2) HILTI HIT-HY 200 SAFE SET SYSTEM WITH HILTI HOLLOW DRILL BIT SYSTEM WITH HAS-E THREADED ROD PER ICC ESR-3187.
(3) HILTI HIT-RE 500-V3 EPOXY ADHESIVE ANCHORING SYSTEM WITH HAS-E THREADED ROD PER ICC ESR-2322 FOR SLOW CURE APPLICATIONS

ii) MEDIUM DUTY MECHANICAL ANCHORS FOR CRACKED AND UNCRACKED CONCRETE USE:
(1) HILTI KWIK HUS-EZ AND KWIK HUS EZ-I SCREW ANCHORS PER ICC ESR-3027
(2) HILTI KWIK BOLT-TZ EXPANSION ANCHORS PER ICC ESR-1917
(3) HILTI KWIK BOLT 3 EXPANSION ANCHORS (UNCRACKED CONCRETE ONLY) PER ICC ESR-2302

iii) HEAVY DUTY MECHANICAL ANCHORS FOR CRACKED AND UNCRACKED CONCRETE USE:
(1) HILTI HDA UNDERCUT ANCHORS PER ICC ESR 1546
(2) HILTI HSL-3 EXPANSION ANCHORS PER ICC ESR 1545

b) REBAR DOWELING INTO CONCRETE

i) ADHESIVE ANCHORS FOR CRACKED AND UNCRACKED CONCRETE USE:
(1) HILTI HIT-HY 200 SAFE SET SYSTEM WITH HILTI HOLLOW DRILL BIT SYSTEM WITH CONTINUOUSLY DEFORMED REBAR PER ICC ESR-3187.
(2) HILTI HIT-RE 500-V3 EPOXY ADHESIVE ANCHORING SYSTEM WITH CONTINUOUSLY DEFORMED REBAR PER ICC ESR-2322.

c) ANCHORAGE TO SOLID GROUTED MASONRY

i) ADHESIVE ANCHORS USE:
(1) HILTI HIT-HY 70 MASONRY ADHESIVE ANCHORING SYSTEM (ICC PENDING).
(2) STEEL ANCHOR ELEMENT SHALL BE HILTI HAS-E CONTINUOUSLY THREADED ROD OR CONTINUOUSLY DEFORMED STEEL REBAR

ii) MECHANICAL ANCHORS USE:
(1) HILTI KWIK HUS-EZ SCREW ANCHOR PER ICC ESR-3056
(2) HILTI KWIK BOLT-3 EXPANSION ANCHORS PER ICC ESR-1385

6.02 ANCHOR CAPACITY USED IN DESIGN SHALL BE BASED ON THE TECHNICAL DATA PUBLISHED BY HILTI OR SUCH OTHER METHOD AS APPROVED BY THE STRUCTURAL ENGINEER OF RECORD. SUBSTITUTION REQUESTS FOR ALTERNATE PRODUCTS MUST BE APPROVED IN WRITING BY THE STRUCTURAL ENGINEER OF RECORD PRIOR TO USE. CONTRACTOR SHALL PROVIDE CALCULATIONS DEMONSTRATING THAT THE SUBSTITUTED PRODUCT IS CAPABLE OF ACHIEVING THE PERFORMANCE VALUES OF THE SPECIFIED PRODUCT. SUBSTITUTIONS WILL BE EVALUATED BY THEIR HAVING AN ICC ESR SHOWING COMPLIANCE WITH THE RELEVANT BUILDING CODE FOR SEISMIC USES, LOAD RESISTANCE, INSTALLATION CATEGORY, AND AVAILABILITY OF COMPREHENSIVE INSTALLATION INSTRUCTIONS. ADHESIVE ANCHOR EVALUATION WILL ALSO CONSIDER CREEP, IN-SERVICE TEMPERATURE AND INSTALLATION TEMPERATURE.

6.03 INSTALL ANCHORS PER THE MANUFACTURER INSTRUCTIONS, AS INCLUDED IN THE ANCHOR PACKAGING AND IN STRICT ACCORDANCE WITH THE CURRENT ICC ESR. OVERHEAD ADHESIVE ANCHORS MUST BE INSTALLED USING THE HILTI PROFIS SYSTEM AND IN STRICT ACCORDANCE WITH THE CURRENT ICC ESR.

6.04 THE CONTRACTOR SHALL ARRANGE AN ANCHOR MANUFACTURER'S REPRESENTATIVE TO PROVIDE ONSITE INSTALLATION TRAINING FOR ALL OF THEIR ANCHORING PRODUCTS SPECIFIED. THE STRUCTURAL ENGINEER OF RECORD MUST RECEIVE DOCUMENTED CONFIRMATION THAT ALL OF THE CONTRACTOR'S PERSONNEL WHO INSTALL ANCHORS ARE TRAINED PRIOR TO THE COMMENCEMENT OF INSTALLING ANCHORS.

6.05 ANCHOR CAPACITY IS DEPENDANT UPON SPACING BETWEEN ADJACENT ANCHORS AND PROXIMITY OF ANCHORS TO EDGE OF CONCRETE. INSTALL ANCHORS IN ACCORDANCE WITH SPACING AND EDGE CLEARANCES INDICATED ON THE DRAWINGS.

6.06 EXISTING REINFORCING BARS IN THE CONCRETE STRUCTURE MAY CONFLICT WITH SPECIFIC ANCHOR LOCATIONS. UNLESS NOTED ON THE DRAWINGS THAT THE BARS CAN BE CUT, THE CONTRACTOR SHALL REVIEW THE EXISTING STRUCTURAL DRAWINGS AND SHALL UNDERTAKE TO LOCATE THE POSITION OF THE REINFORCING BARS AT THE LOCATIONS OF THE CONCRETE ANCHORS, BY HILTI FERROSCAN, GPR, X-RAY, CHIPPING, OR OTHER MEANS.

6.07 ADHESIVE ANCHORS SHALL BE INSTALLED IN CONCRETE HAVING A MINIMUM AGE OF 21 DAYS AT THE TIME OF ANCHOR INSTALLATION IN ACCORDANCE WITH ACI 318-11 D.2.2.

6.08 INSTALLATION OF ADHESIVE ANCHORS IN HORIZONTAL TO VERTICALLY OVERHEAD ORIENTATION SHALL BE DONE BY A CERTIFIED ADHESIVE ANCHOR INSTALLER (AAI) AS CERTIFIED THROUGH ACI AND IN ACCORDANCE WITH ACI 318-2011 (SECTION D.9.2.2). PROOF OF CURRENT CERTIFICATION SHALL BE SUBMITTED TO THE ENGINEER FOR APPROVAL PRIOR TO COMMENCEMENT OF INSTALLATION.

6.09 PROVIDE SPECIAL INSPECTION FOR ALL MECHANICAL AND ADHESIVE ANCHORS PER THE APPLICABLE BUILDLING CODE AND PER THE CURRENT ICC-ES REPORT FOR THE ANCHOR.

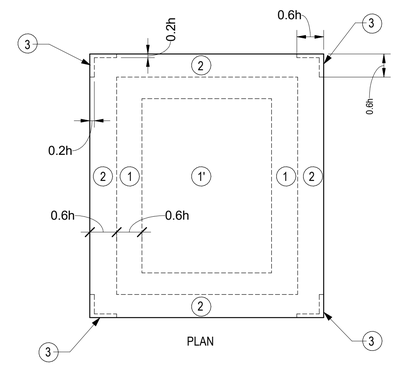

PLAN

MONOSLOPE < 3°

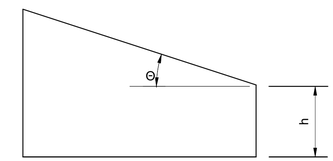

ELEVATION

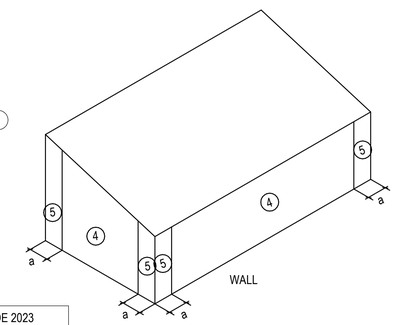

WALL

WIND LOAD DETERMINATION ASSUMPTIONS - FLORIDA BUILDING CODE 2023					
WIND VELOCITY (MPH)	EXPOSURE CATEGORY	MEAN ROOF HEIGHT (FT.)	ROOF SLOPE	RISK CATEGORY	ENCLOSURE CATEGORY
150	C	15.5	1/4 :12	II	ENCLOSED

ULTIMATE DESIGN WIND PRESSURES FOR COMPONENTS AND CLADDING (PSF)					
WIND ZONE PER ASCE 7-22	EFFECTIVE AREA				
	10 SF	50 SF	100 SF	200 SF	500 SF
ROOF ZONE 1	-79	-67	-62	-56	-50
ROOF ZONE 1'	-45	-45	-45	-39	-31
ROOF ZONE 2	-104	-89	-82	-75	-66
ROOF ZONE 3	-142	-111	-97	-84	-66
POSITIVE ALL ZONES	20	17	16	16	16
OVERHANG ZONE 1&1'	-71	-68	-67	-56	-42
OVERHANG ZONE 2	-97	-76	-67	-58	-46
OVERHANG ZONE 3	-134	-98	-82	-67	-46
WALL ZONE 4	-49	-44	-42	-40	-38
WALL ZONE 5	-60	-51	-47	-43	-38
POSITIVE ZONE 4&5	45	41	39	37	34

NOTES:
1. FOR EFFECTIVE AREAS BETWEEN THOSE GIVEN ABOVE THE LOAD MAY BE INTERPOLATED, OTHERWISE USE THE LOAD ASSOCIATED WITH THE LOWER EFFECTIVE AREA.
2. THE EDGE STRIP, a = 5.0 FT.
3. PRESSURES SHALL BE APPLIED IN ACCORDANCE WITH THE FIGURE SHOWN ON THIS SHEET.
4. PRESSURES GIVEN ARE ULTIMATE LOADS TO BE USED WITH STRENGTH DESIGN. FOR SERVICE LOADS TO BE USED WITH ALLOWABLE STRESS DESIGN, MULTIPLY THE PRESSURES BY 0.60. SEE TABLES 2.3 AND 2.4 IN ASCE 7-22 FOR MORE INFORMATION ON LOAD COMBINATIONS.

Quina Grundhoefer Architects
400 West Romana Street Pensacola, Fl 32502
850 433-5575 fax 850 433-5366 qg@qgarchitects.com

JDA JOE DEREUIL ASSOCIATES, LLC
STRUCTURAL ENGINEERS
STATE OF FLORIDA
P.E. NO. 54319 / C.A. NO. 9515
301 West Cervantes St. Tel. 850.429.1951
Pensacola, FL 32501 Fax. 850.429.0158

LOUIS JOSEPH DEREUIL ESTITICA No. 54319 STATE OF FLORIDA REGISTERED ENGINEER 4/30/2024

Project
Addition to
Pace Fire Station #4
Pace, Florida

Date: 4/30/2024
Project No. 1223
Sheet No. S0.2

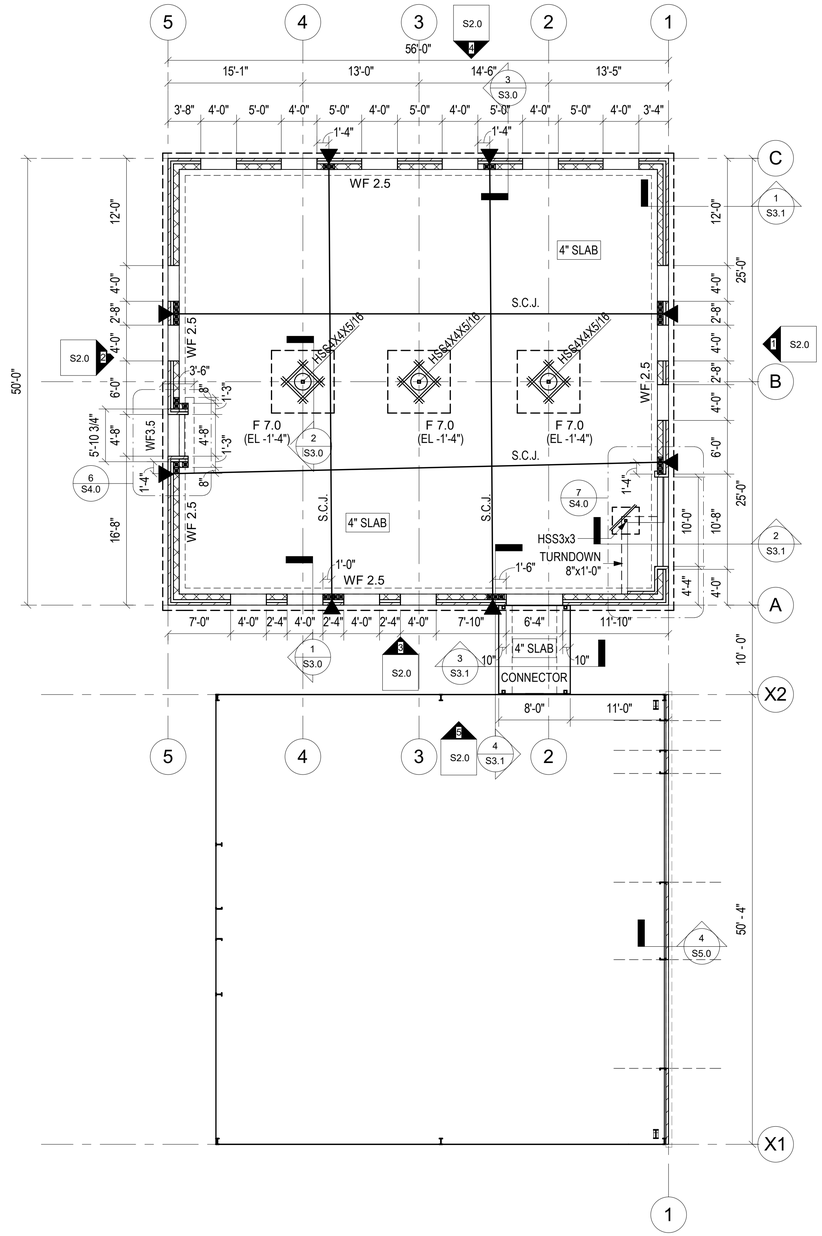

1 S1.1 FOUNDATION AND SLAB-ON-GRADE PLAN
1/8" = 1'-0"

LEGEND

	=	8" NOMINAL CMU WALL. UNLESS NOTED OTHERWISE (U.N.O.), WALL SHALL BE REINFORCED WITH #5 VERTICAL REINFORCING AT 2'-0" ON CENTER, CENTERED IN GROUT FILLED CELLS. PROVIDE HORIZONTAL JOINT REINFORCING AND ADDITIONAL VERTICAL REINFORCING AS OUTLINED IN THE GENERAL NOTES, TYPICAL DETAILS AND SECTIONS IN THESE DRAWINGS.
	=	ADDITIONAL GROUT FILLED AND REINFORCED CELL IN ADDITION TO TYPICAL REINFORCING. PROVIDE BAR SIZE TO MATCH WALL REINF.
	=	VERTICAL MASONRY CONTROL JOINT LOCATION; SEE TYPICAL DETAILS
S.C.J.	=	SAWN CONTRACTION JOINT OR COLD CONSTRUCTION JOINT; CONTRACTOR'S OPTION U.N.O. PLACE S.C.J. AS INDICATED AND AT 15'-0" O.C. MAXIMUM SPACING, TYPICAL
C.J.	=	WHERE INDICATED, PROVIDE FORMED CONSTRUCTION JOINT ONLY.
4" SLAB	=	4" MINIMUM THICKNESS SLAB-ON-GRADE REINFORCED WITH WWF 6x6 W2.9xW2.9 WITH 3" CLR. POSITIVE SUPPORT FROM BOTTOM OF SLAB. SLAB SHALL BE PLACED OVER A VAPOR BARRIER AND CAPILLARY BREAK AS INDICATED IN THE GENERAL NOTES ON SHEET S0.1.
	=	(2) #4x4'-0" RE-ENTRANT CRACK CONTROL REINF. W/1" CLR TO TOP OF SLAB

FOUNDATION SCHEDULE

MARK	WIDTH	LENGTH	THICKNESS	BOTTOM REINFORCING	TOP REINFORCING
F3.0	3'-0"	3'-0"	1'-0"	(4)-#4 BARS E.W.	N/A
F7.0	7'-0"	7'-0"	1'-6"	(8)-#6 BARS E.W.	(8)-#5 BARS E.W.
WF2.5	2'-6"	SEE PLAN	1'-0"	(4)-#5 CONTINUOUS BARS #5 AT 12" O.C. TRANSVERSE	N/A
WF3.5	3'-6"	SEE PLAN	1'-0"	(6)-#5 CONTINUOUS BARS #5 AT 12" O.C. TRANSVERSE	N/A

TYPICAL TOP OF FOOTINGS AT EL. -2'-0" U.N.O.

Quina Grundhoefer Architects
400 West Romana Street Pensacola, Fl 32502
850 433-5575 fax 850 433-5366 qg@qgarchitects.com

JDA JOE DEREUIL ASSOCIATES, LLC
STRUCTURAL ENGINEERS
STATE OF FLORIDA
P.E. NO. 54319 / C.A. NO. 9515
301 West Cervantes St. Tel. 850.429.1951
Pensacola, FL 32501 Fax. 850.429.0158

LOUIS JOSEPH VERDEL III CERTIFICATE No. 54319 STATE OF FLORIDA REGISTERED ENGINEER 4/30/2024

Project
Addition to
Pace Fire Station #4
Pace, Florida

Date:
4/30/2024
Project No.
1223

Sheet No.
S1.1

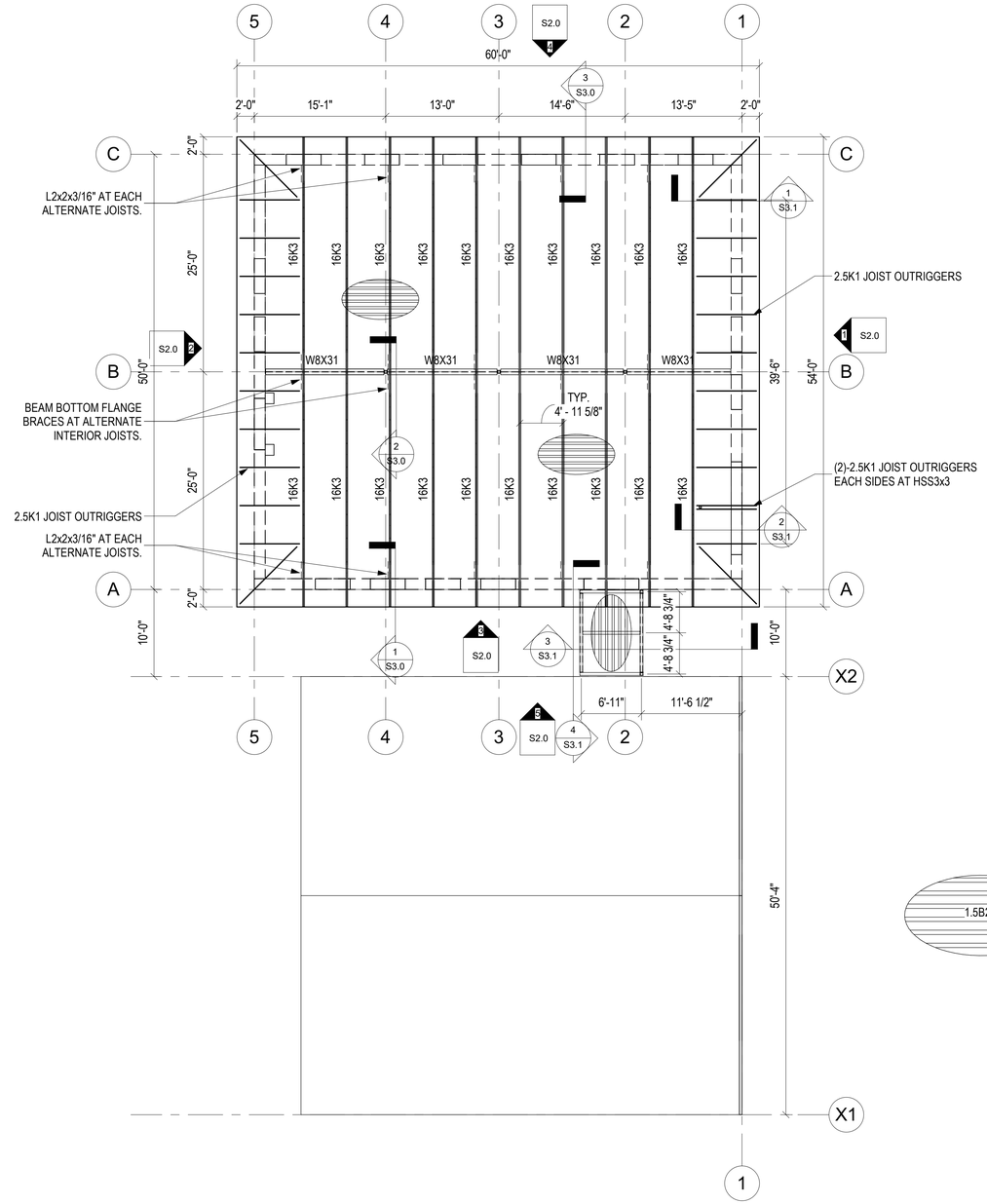

ROOF FRAMING PLAN

1 S1.2 — 1/8" = 1'-0"

ROOF FRAMING NOTES

K SERIES JOIST MFR. NOTES:

1. PROVIDE BEAM BOTTOM FLANGE BRACING AT ALL PERIMETER JOISTS AND ALTERNATE INTERIOR JOISTS TO BOTTOM FLANGE OF W-SHAPE BEAMS; LOADS SHOWN FOR JOIST DESIGN ARE SERVICE.
2. PROVIDE JOIST UPLIFT BRIDGING AND TYPICAL BRACING AT A SPACING EQUAL TO THE MINIMUM OF 10' OR AS REQUIRED FOR JOIST DESIGN. PROVIDE A MINIMUM OF ONE X-BRIDGED BAY AT EACH BRIDGING RUN.
3. SPACE JOISTS AT A MAXIMUM SPACING OF 5'-0" O.C., U.N.O. ON ROOF FRAMING PLAN.

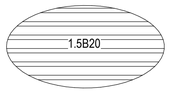

=

1.5" TYPE B 20 GA VULCRAFT OR EQUIVALENT (fy ≥ 40 ksi)
(TH= 0.0358 in, I= 0.201 in^4/ft) ROOF DECK, U.N.O.
INSTALLATION/ATTACHMENT:
SUPPORT FASTENERS: #12 HWH SELF TAPPING TEK SCREWS
SIDELAP FASTENERS: PUNCHLOK II SYSTEM OR #12 SCREWS
FASTENER LAYOUT:
ALL ROOF ZONES: 36/7 PATTERN
SIDELAPS: PUNCHLOK II FASTENER SPACING: 24" O.C. OR #12 SCREWS AT 6" ON CENTER
* ANCHOR DECK ALONG ALL EDGES TO EXISTING DECKING WITH #12 SCREWS AT 6" O.C.; TYPICAL
-FINISH REQUIREMENTS: G-90 GALVANIZED COATING WITH SHOP PRIMER OVER GALVANIZING AT BOTTOM OF DECK.

Quina Grundhoefer Architects
400 West Romana Street Pensacola, Fl 32502
850 433-5575 fax 850 433-5366 qg@qgarchitects.com

JDA JOE DEREUIL ASSOCIATES, LLC
STRUCTURAL ENGINEERS
STATE OF FLORIDA
P.E. NO. 54319 / C.A. NO. 9515
301 West Cervantes St. Tel. 850.429.1951
Pensacola, FL 32501 Fax. 850.429.0158

LOUIS JOSEPH DEREUIL III — STATE OF FLORIDA — REGISTERED ENGINEER — No. 54319 — 4/30/2024

Project
Addition to
Pace Fire Station #4
Pace, Florida

Date: 4/30/2024
Project No. 1223
Sheet No. S1.2

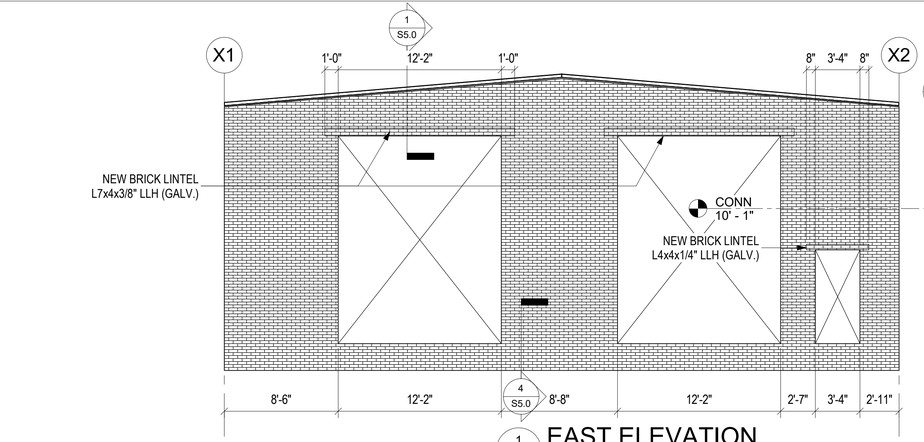

1 S2.0 EAST ELEVATION
3/16" = 1'-0"

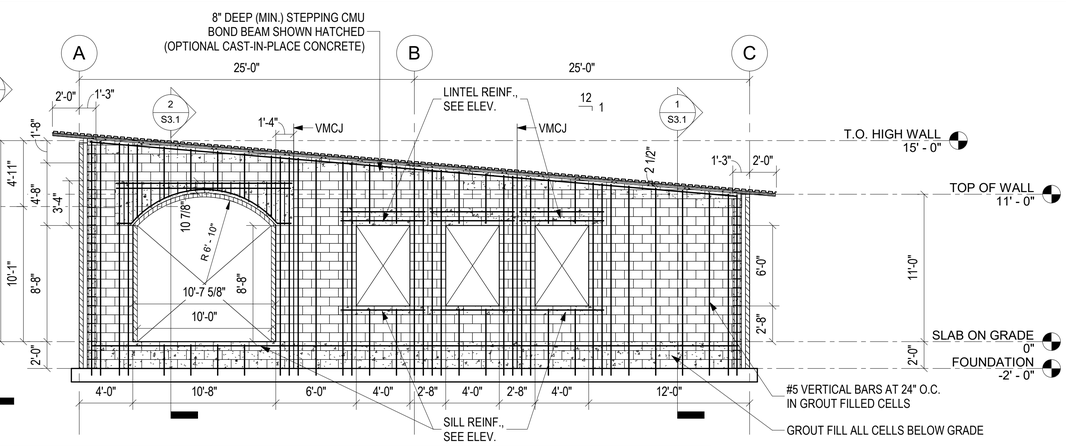

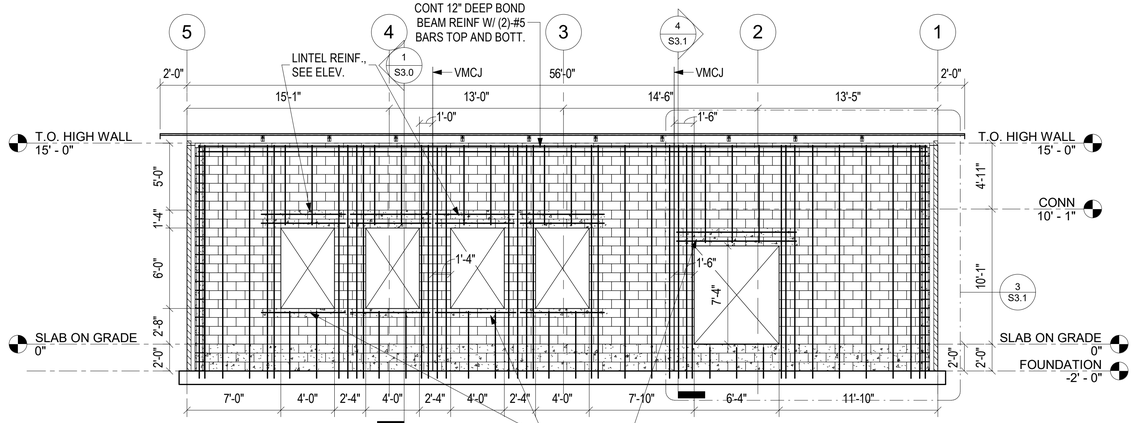

3 S2.0 SOUTH ELEVATION
3/16" = 1'-0"

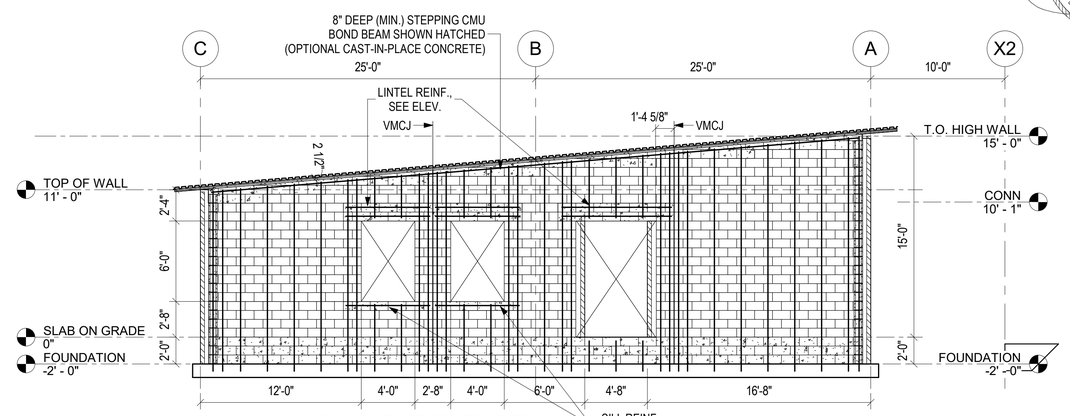

2 S2.0 WEST ELEVATION
3/16" = 1'-0"

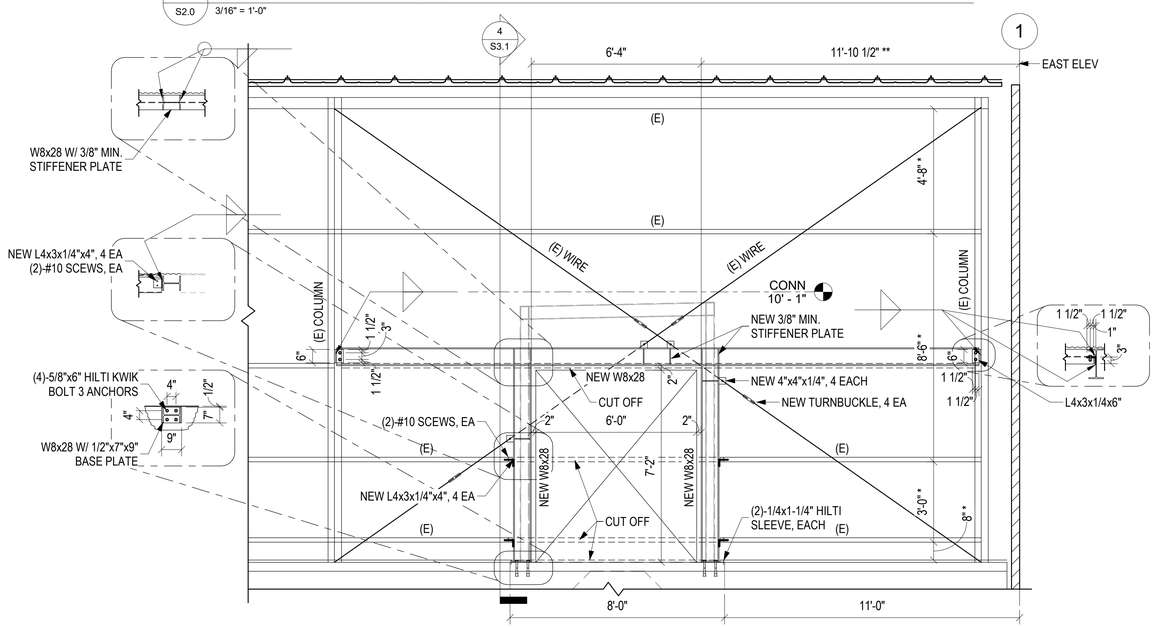

5 S2.0 SOUTH ELEV - INSIDE
3/8" = 1'-0"

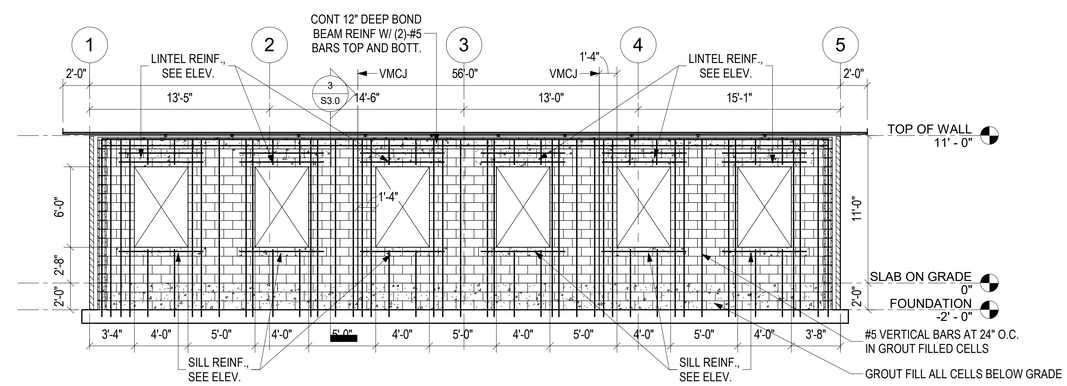

4 S2.0 NORTH ELEVATION
3/16" = 1'-0"

Quina Grundhoefer Architects

400 West Romana Street Pensacola, Fl 32502
850 433-5575 fax 850 433-5366 qg@qgarchitects.com

JDA JOE DEREUIL ASSOCIATES, LLC
STRUCTURAL ENGINEERS
STATE OF FLORIDA
P.E. NO. 54319 / C.A. NO. 9515
301 West Cervantes St. Tel. 850.429.1951
Pensacola, FL 32501 Fax. 850.429.0158

LOUIS JOSEPH VERCELLI
CERTIFICATE No. 54319
STATE OF FLORIDA
4/30/2024
REGISTERED ENGINEER

Project
Addition to
Pace Fire Station #4
Pace, Florida

Date:
4/30/2024
Project No.
1223

Sheet No.
S2.0

Quina Grundhoefer Architects

400 West Romana Street Pensacola, Fl 32502
850 433-5575 fax 850 433-5366 qg@qgarchitects.com

JDA JOE DEREUIL ASSOCIATES, LLC
STRUCTURAL ENGINEERS
STATE OF FLORIDA
P.E. NO. 54319 / C.A. NO. 9515
301 West Cervantes St. Tel. 850.429.1951
Pensacola, FL 32501 Fax. 850.429.0158

JOHN JOSEPH DEREUIL
STATE OF FLORIDA
No. 54319
4/30/2024
REGISTERED ENGINEER

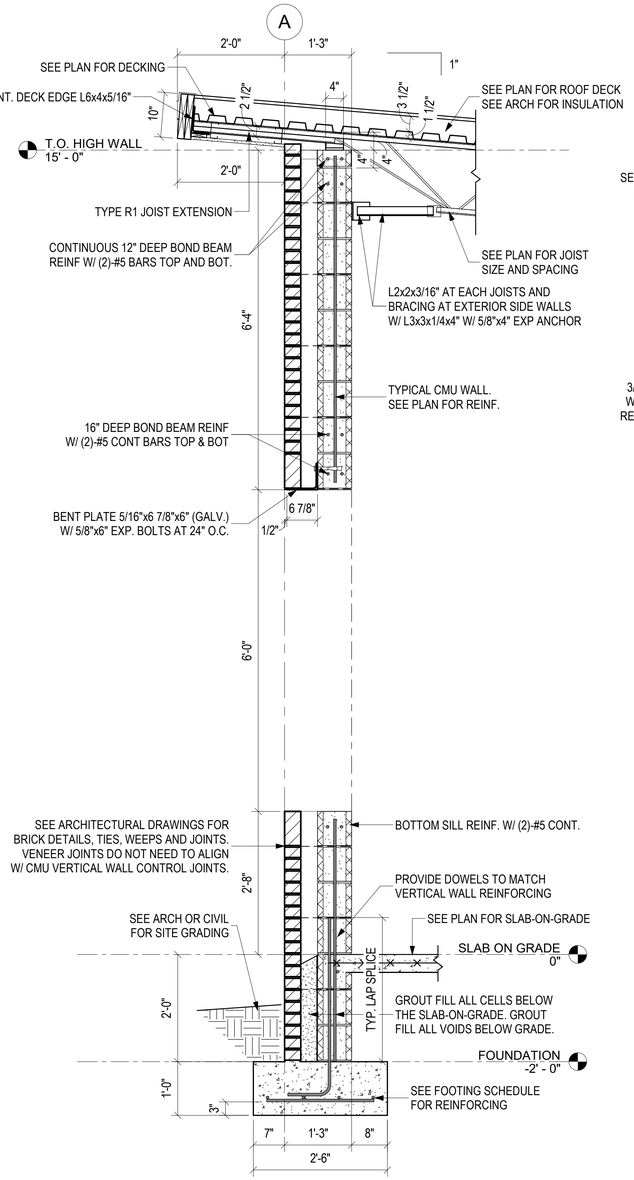

1 S3.0 WALL SECTION LINE A
3/4" = 1'-0"

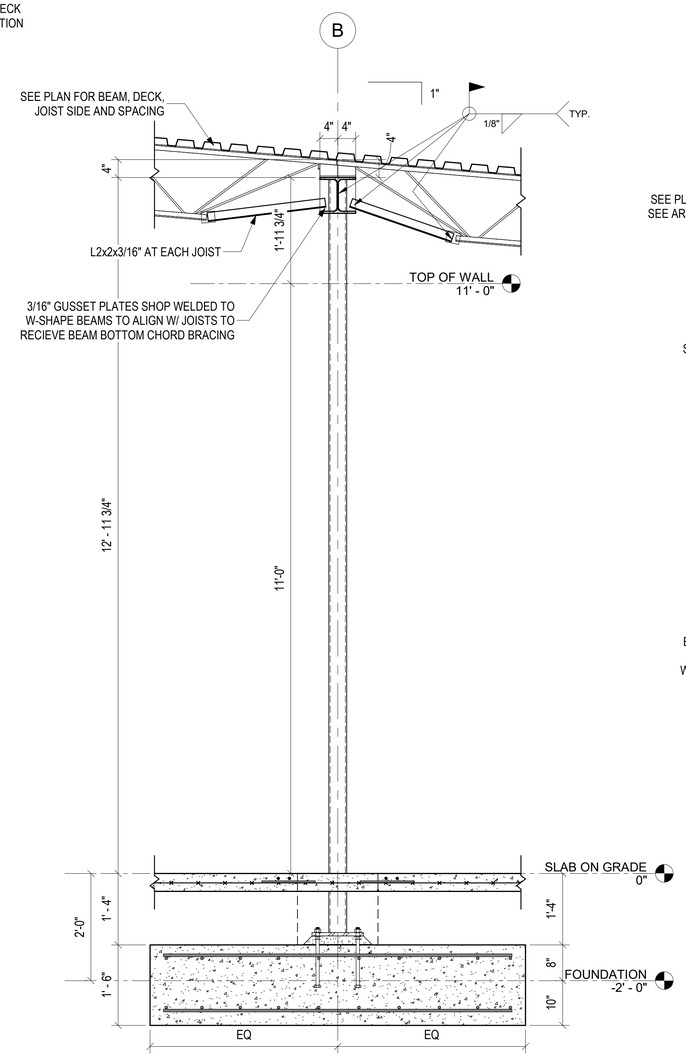

2 S3.0 WALL SECTION LINE B
3/4" = 1'-0"

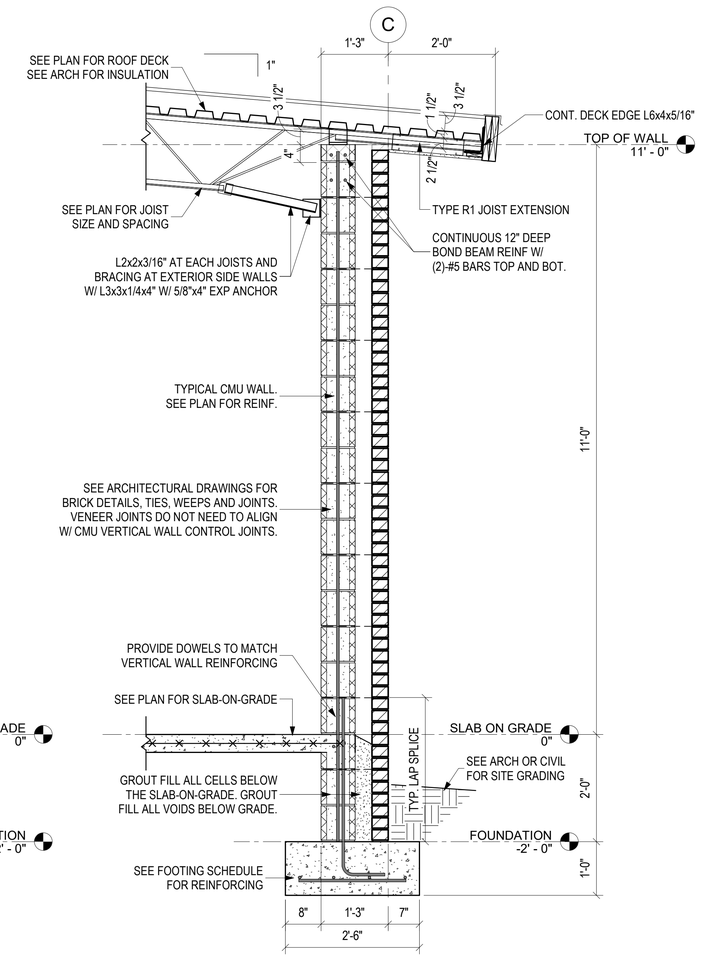

3 S3.0 WALL SECTION LINE C
3/4" = 1'-0"

Project
Addition to
Pace Fire Station #4
Pace, Florida

Date:
4/30/2024
Project No.
1223

Sheet No.
S3.0

Quina Grundhoefer Architects

400 West Romana Street Pensacola, Fl 32502
850 433-5575 fax 850 433-5366 qg@qgarchitects.com

JDA JOE DEREUIL ASSOCIATES, LLC
STRUCTURAL ENGINEERS
STATE OF FLORIDA
P.E. NO. 54319 / C.A. NO. 9515
301 West Cervantes St. Tel. 850.429.1951
Pensacola, FL 32501 Fax. 850.429.0158

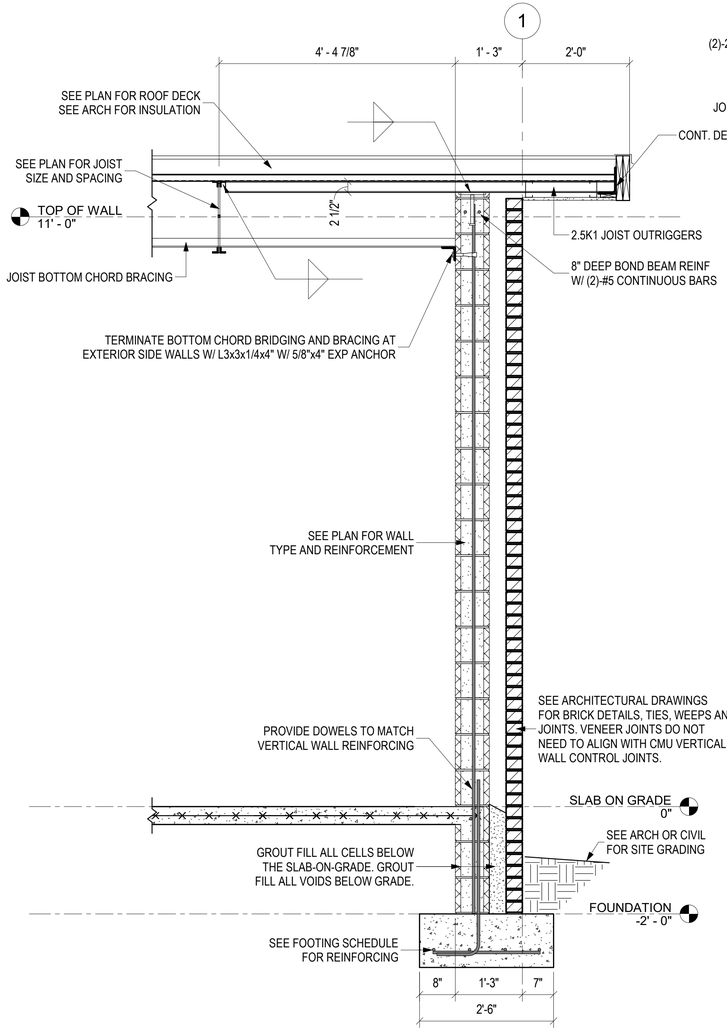

1 S3.1 WALL SECTION LINE 1
3/4" = 1'-0"

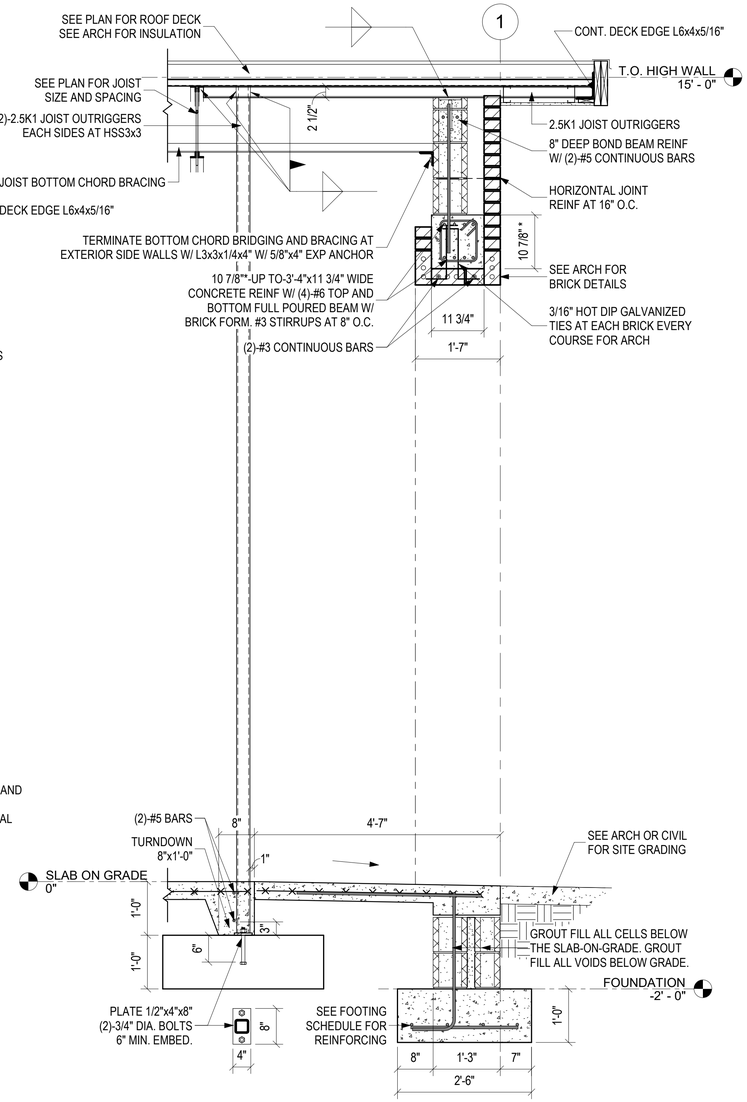

2 S3.1 WALL SECTION - ARCH ENTRY
3/4" = 1'-0"

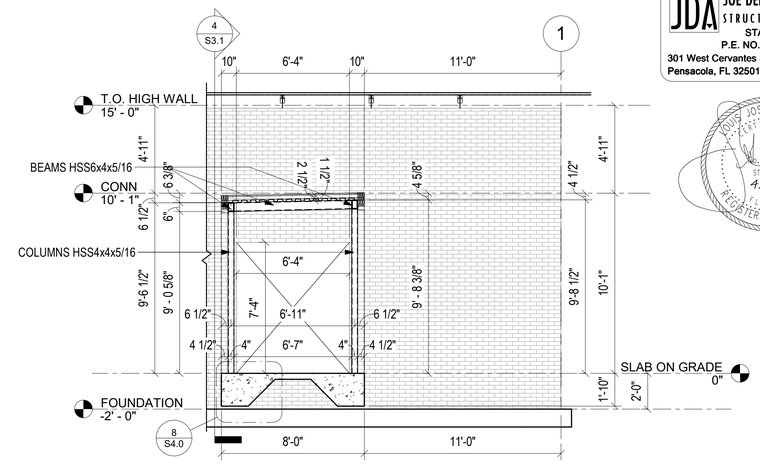

3 S3.1 CONNECTOR - SOUTH ELEV.
1/4" = 1'-0"

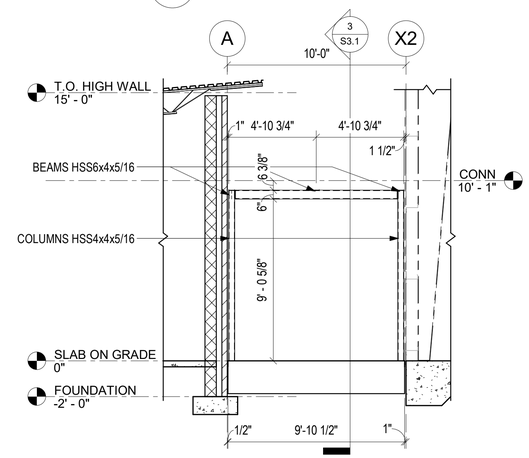

4 S3.1 CONNECTOR - WEST ELEV.
1/4" = 1'-0"

Project
Addition to
Pace Fire Station #4
Pace, Florida

Date:
4/30/2024
Project No.
1223

Sheet No.
S3.1

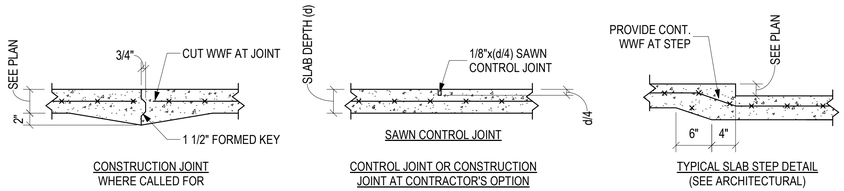

1 / S4.0 TYPICAL SLAB-ON-GRADE DETAILS

1" = 1'-0"

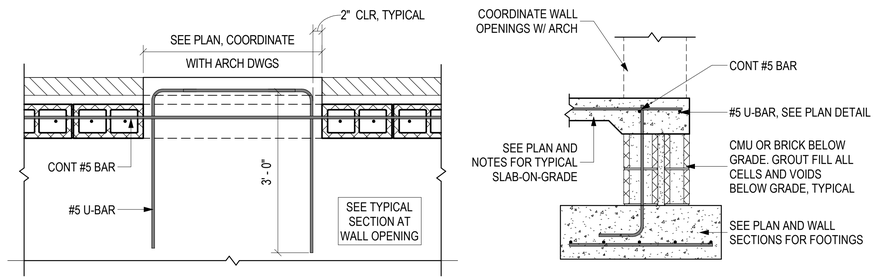

2 / S4.0 ADDITIONAL SLAB-ON-GRADE REINF. AT OPENINGS

3/4" = 1'-0"

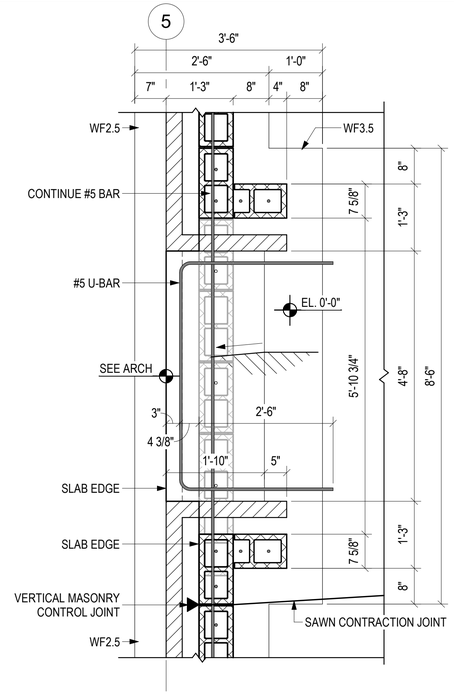

6 / S4.0 WEST ENTRY

3/4" = 1'-0"

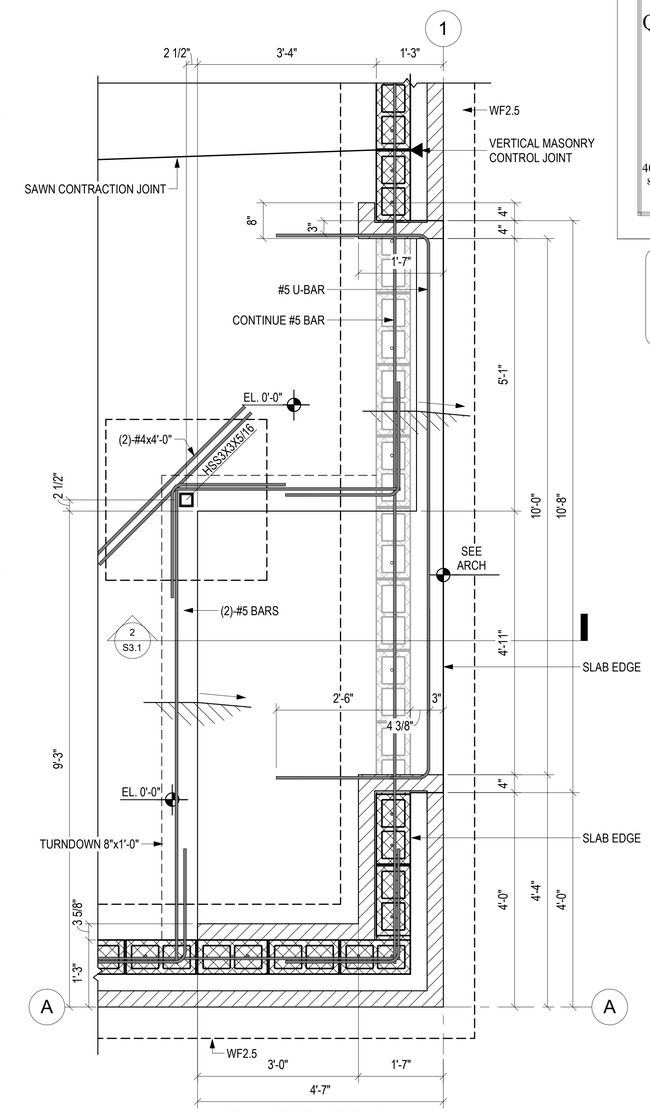

7 / S4.0 EAST ENTRY

3/4" = 1'-0"

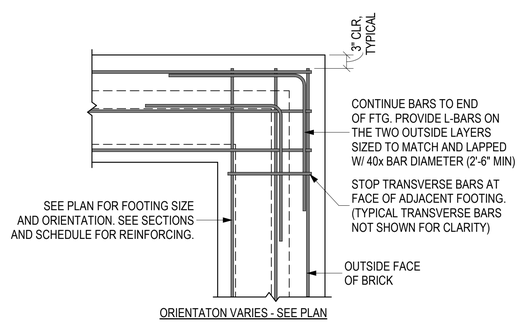

3 / S4.0 TYPICAL WALL FOOTING INTERSECTION

3/4" = 1'-0"

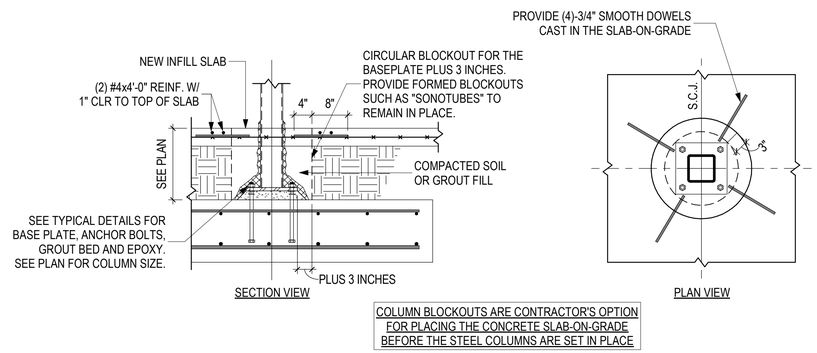

5 / S4.0 INTERIOR COLUMN BLOCKOUT DETAIL

3/4" = 1'-0"

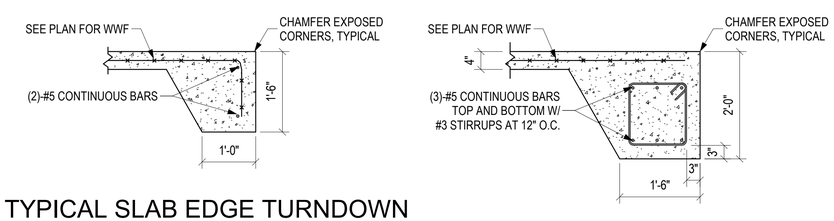

4 / S4.0 TYPICAL SLAB EDGE TURNDOWN

3/4" = 1'-0"

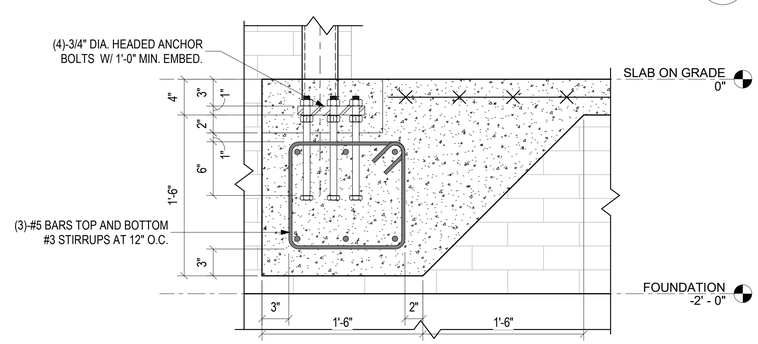

8 / S4.0 CONNECTOR SLAB EDGE - SOUTH ELEV.

1 1/2" = 1'-0"

Quina Grundhoefer Architects

400 West Romana Street Pensacola, Fl 32502
850 433-5575 fax 850 433-5366 qg@qgarchitects.com

JDA JOE DEREUIL ASSOCIATES, LLC
STRUCTURAL ENGINEERS
STATE OF FLORIDA
P.E. NO. 54319 / C.A. NO. 9515
301 West Cervantes St. Tel. 850.429.1951
Pensacola, FL 32501 Fax. 850.429.0158

LOUIS JOSEPH DEREUIL
No. 54319
STATE OF FLORIDA
4/30/2024
REGISTERED ENGINEER

Project
Addition to
Pace Fire Station #4
Pace, Florida

Date:
4/30/2024
Project No.
1223

Sheet No.
S4.0

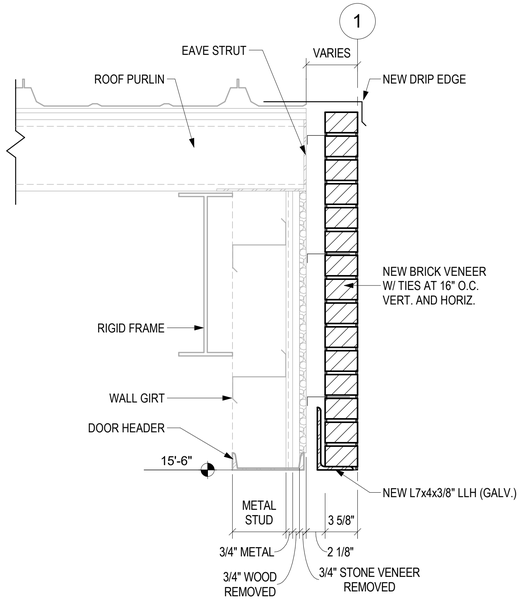

1 S5.0 NEW BRICK LINTEL - EAST ELEV.
1 1/2" = 1'-0"

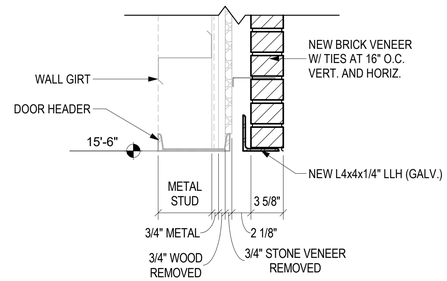

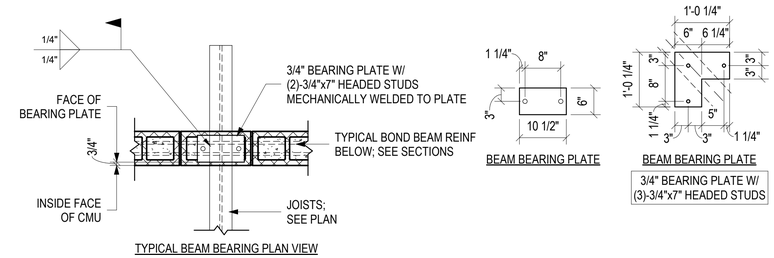

2 S5.0 TYPICAL BEARING PLATE DETAILS
3/4" = 1'-0"

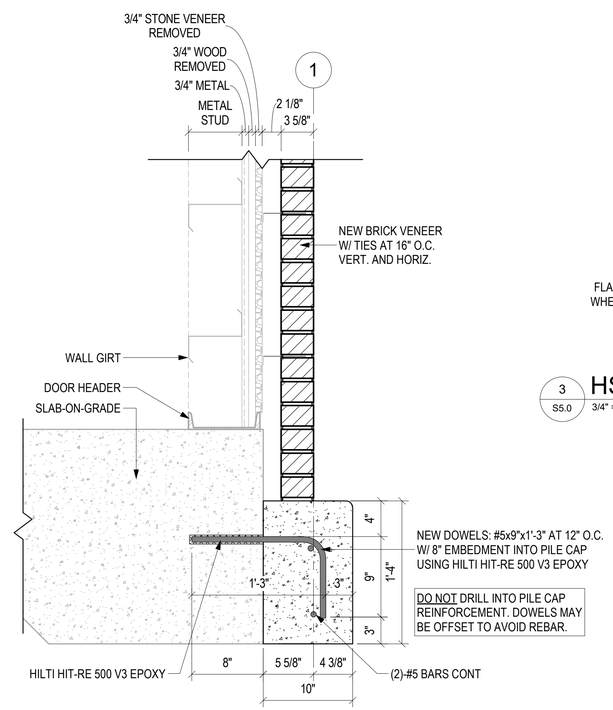

4 S5.0 NEW BRICK ON FOOTING
1 1/2" = 1'-0"

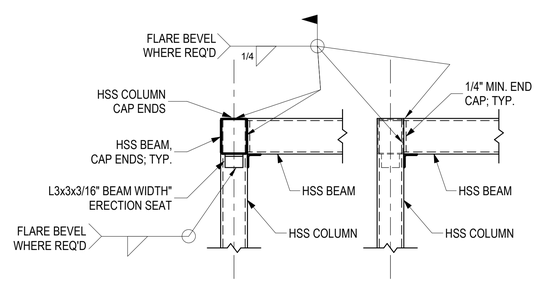

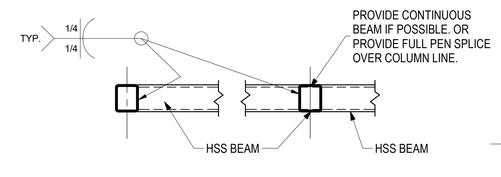

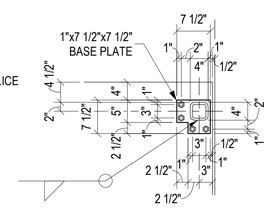

3 S5.0 HSS-TO-HSS CONNECTION DETAILS
3/4" = 1'-0"

Quina Grundhoefer Architects
400 West Romana Street Pensacola, Fl 32502
850 433-5575 fax 850 433-5366 qg@qgarchitects.com

JDA JOE DEREUIL ASSOCIATES, LLC
STRUCTURAL ENGINEERS
STATE OF FLORIDA
P.E. NO. 54319 / C.A. NO. 9515
301 West Cervantes St. Tel. 850.429.1951
Pensacola, FL 32501 Fax. 850.429.0158

JOHN JOSEPH DEREUIL
CERTIFICATE
No. 54319
STATE OF
4/30/2024
FLORIDA
REGISTERED ENGINEER

Project
Addition to
Pace Fire Station #4
Pace, Florida

Date:
4/30/2024
Project No.
1223

Sheet No.
S5.0

Quina Grundhoefer Architects

400 West Romana Street Pensacola, Fl 32502
850 433-5575 fax 850 433-5366 qg@qgarchitects.com

JDA JOE DEREUIL ASSOCIATES, LLC
STRUCTURAL ENGINEERS
STATE OF FLORIDA
P.E. NO. 54319 / C.A. NO. 9515
301 West Cervantes St. Tel. 850.429.1951
Pensacola, FL 32501 Fax. 850.429.0158

LOUIS JOSEPH DEREUIL
CERTIFICATE No. 54319
STATE OF FLORIDA
4/30/2024
REGISTERED ENGINEER

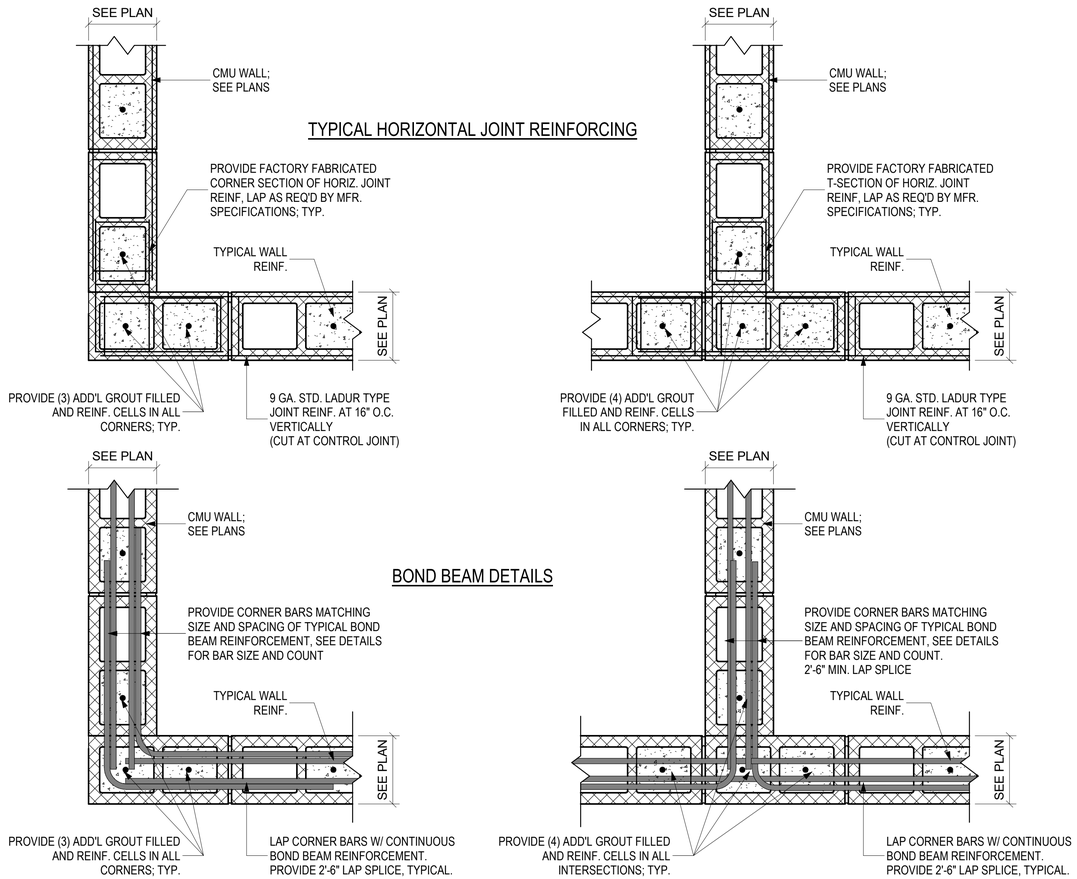

TYPICAL CMU WALL CORNER DETAIL, U.N.O.

TYPICAL CMU WALL INTERSECTION DETAIL, U.N.O.

1 / S5.1 TYPICAL CMU WALL REINFORCING DETAILS

1 1/2" = 1'-0"

NOTES:
1. PROVIDE U-BLOCK ABOVE OPENING
2. AT SANCTUARY SIDE WALLS (LINES 1 & 10), LINTELS & SILLS SPAN FULL LENGTH OF WALL

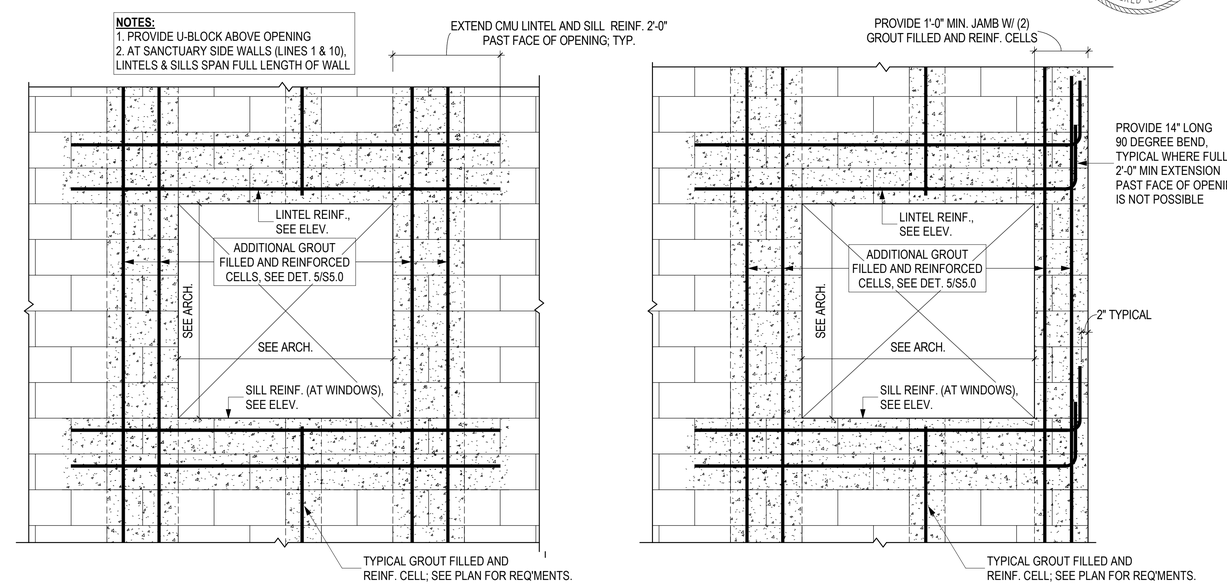

ELEVATION AT OPENINGS WITH 2'-0" MIN. WALL EXTENSION PAST FACE OF OPENING

ELEVATION AT OPENINGS WITH < 2'-0" WALL EXTENSION PAST FACE OF OPENING

2 / S5.1 TYPICAL MASONRY WALL OPENING DETAILS

3/4" = 1'-0"

Project
Addition to
Pace Fire Station #4
Pace, Florida

Date: 4/30/2024
Project No. 1223

Sheet No. S5.1

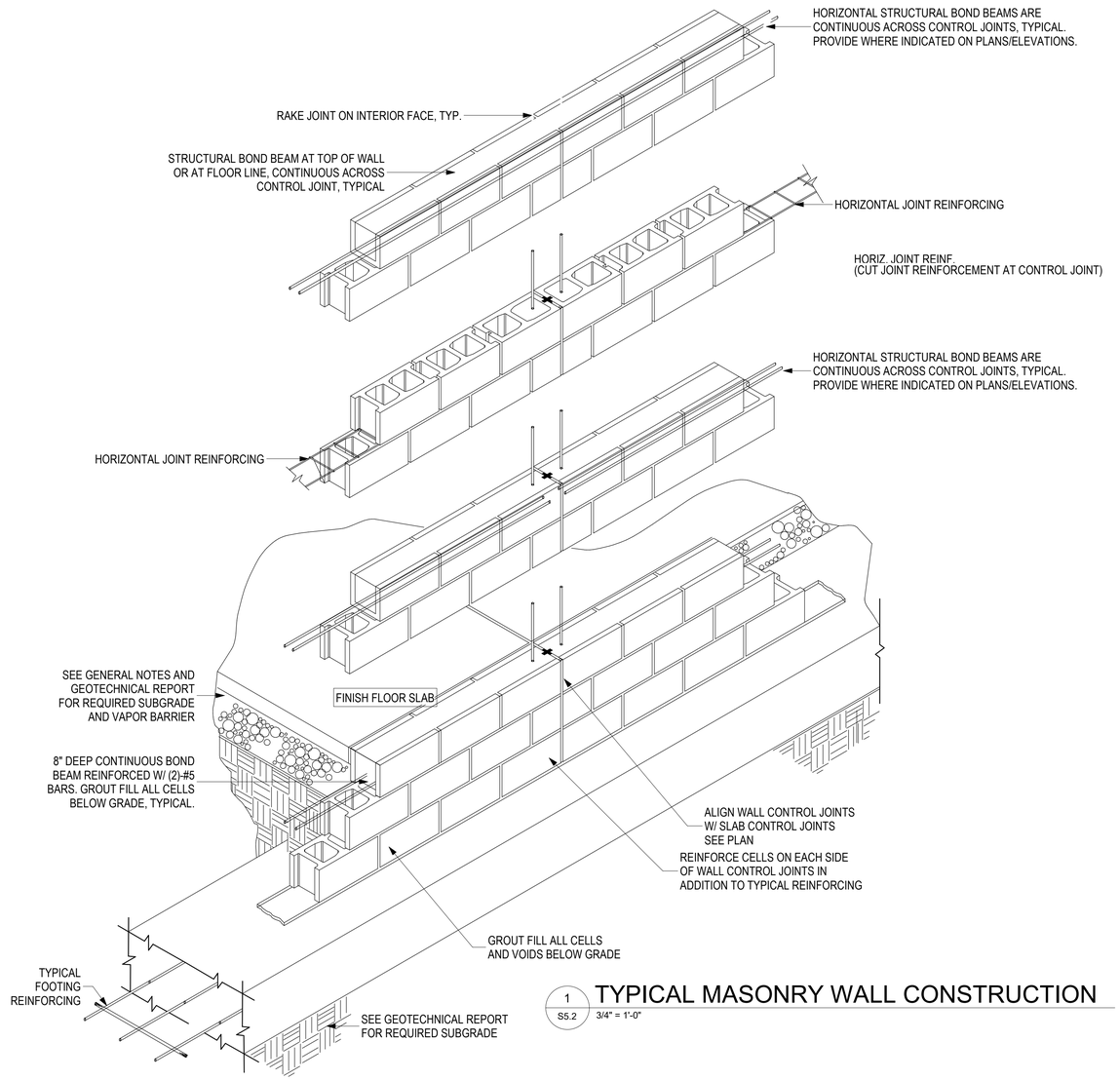

1 S5.2 TYPICAL MASONRY WALL CONSTRUCTION

3/4" = 1'-0"

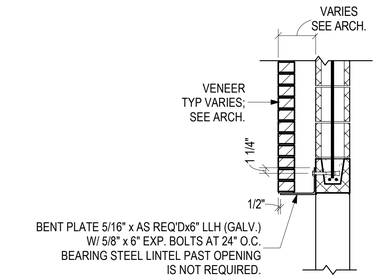

WHERE VENEER SUPPORT IS REQUIRED (COORDINATE W/ ARCHITECTURAL TYPICAL VENEER LINTEL NOT REQUIRED AT ARCHED OPENINGS)

2 S5.2 TYPICAL STEEL LINTEL SUPPORTING VENEER

3/4" = 1'-0"

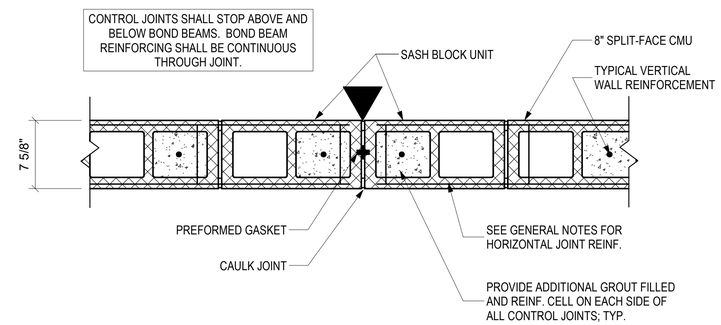

3 S5.2 VERTICAL CONTROL JOINT REINFORCING DETAIL

1 1/2" = 1'-0"

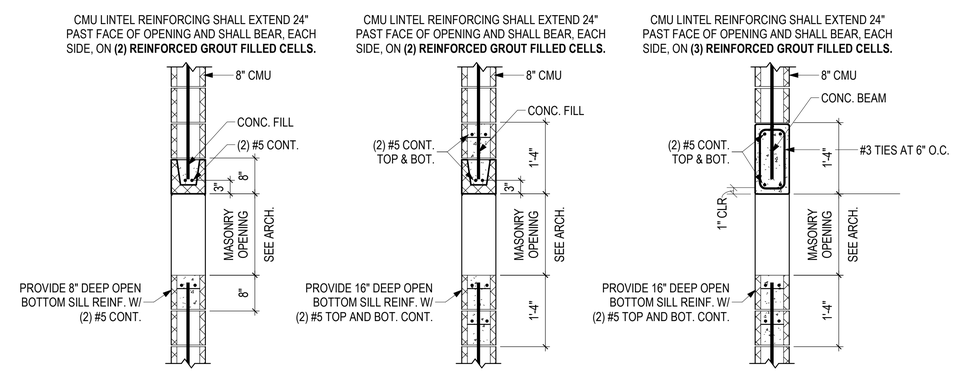

4 S5.2 TYPICAL MASONRY LINTEL/SILL DETAILS

3/4" = 1'-0"

Quina Grundhoefer Architects

400 West Romana Street Pensacola, Fl 32502
850 433-5575 fax 850 433-5366 qg@qgarchitects.com

JDA JOE DEREUIL ASSOCIATES, LLC
STRUCTURAL ENGINEERS
STATE OF FLORIDA
P.E. NO. 54319 / C.A. NO. 9515
301 West Cervantes St. Tel. 850.429.1951
Pensacola, FL 32501 Fax. 850.429.0158

LOUIS JOSEPH VERCELL CERTIFICATE No. 54319 STATE OF FLORIDA 4/30/2024 REGISTERED ENGINEER

Project
Addition to
Pace Fire Station #4
Pace, Florida

Date: 4/30/2024
Project No. 1223

Sheet No. S5.2

Quina Grundhoefer Architects

400 West Romana Street Pensacola, Fl 32502
850-433-5575 qg@qgarchitects.com

SYSTEM DESIGN APPROACH CRITERIA

ORDINARY HAZARD GROUP I – WET PIPE FIRE SPRINKLER SYSTEM WITH A DENSITY OF .15 GPM OVER A MINIMUM REMOTE AREA OF 1500 SQUARE FEET WITH A HOSE STREAM ALLOWANCE OF 250 GPM AND 130 SQUARE FEET OF COVERAGE PER SPRINKLER HEAD MAXIMUM.

LIGHT HAZARD – WET PIPE FIRE SPRINKLER SYSTEM WITH A DENSITY OF .10 GPM OVER A MINIMUM REMOTE AREA OF 1500 SQUARE FEET WITH A HOSE STREAM ALLOWANCE OF 100 GPM AND 225 SQUARE FEET OF COVERAGE PER SPRINKLER HEAD MAXIMUM.

SPRINKLER DESIGN SHALL BE IN ACCORDANCE WITH NFPA 13.

ALL SPRINKLER HEADS SHALL BE QUICK RESPONSE TYPE.

WATER FLOW DATA

WATER FLOW TEST DATA IS FOR ESTIMATING PURPOSES ONLY AND IS CONSIDERED NOT CURRENT AT THE POINT OF SERVICE. THE CONTRACTOR SHALL CONDUCT A HYDRANT FLOW TEST AT POINT OF CONNECTION TO OBTAIN CURRENT FLOW CONDITIONS FOR THE SPRINKLER SYSTEM HYDRAULIC CALCULATIONS.

(MIC) MICROBIAL INDUCED CORROSION IS NOT EXPECTED.

STATIC PRESSURE:	70 PSI
RESIDUAL PRESSURE:	55 PSI
WATER FLOW:	1210 GPM

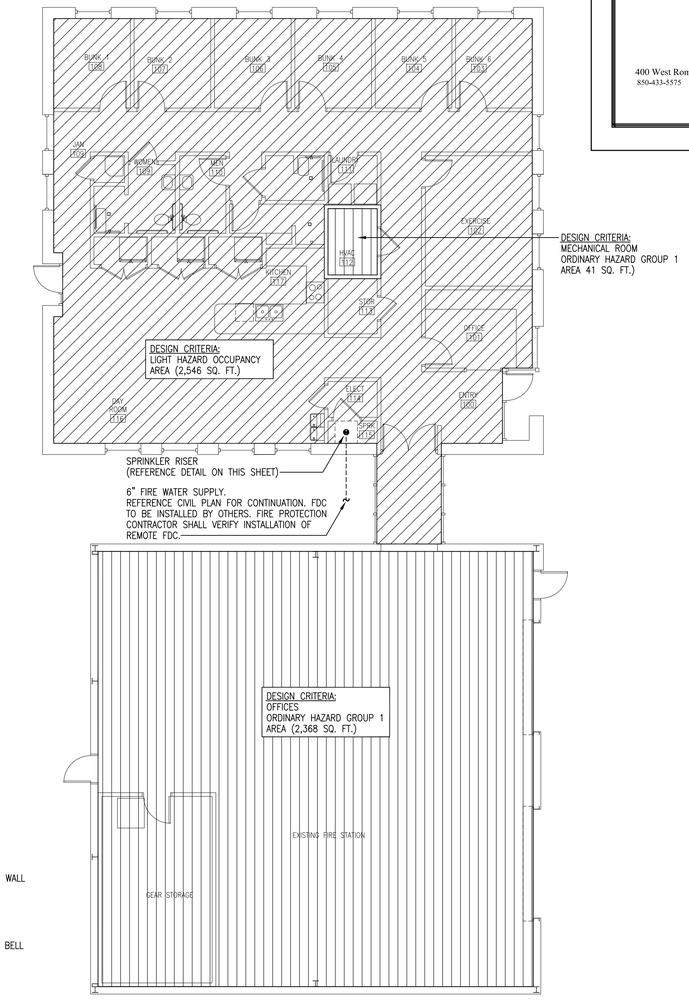

NORTH

FIRE PROTECTION PLAN

SCALE: 1/8" = 1'-0"

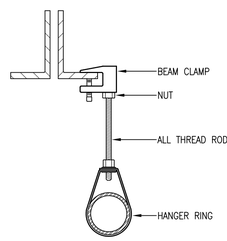

PIPE HANGERS SHALL BE INSTALLED AS REQUIRED BY NFPA FOR SUPPORTING SPRINKLER PIPING. NO OTHER PIPING AND/OR DEVICES ARE TO BE ATTACHED TO THE SPRINKLER PIPE HANGER SYSTEM UNLESS THE HANGER HAS BEEN SPECIFICALLY DESIGNED FOR THE ADDITIONAL LOADING.

THIS CONTRACT DOES NOT INCLUDE ANY MATERIAL OR DEVICE TO IMPROVE THE STRUCTURAL STRENGTH OF THE BUILDING TO ENABLE IT TO CARRY THE LOAD OF THE FIRE PROTECTION SYSTEM.

BEAM HANGER DETAIL

NOT TO SCALE

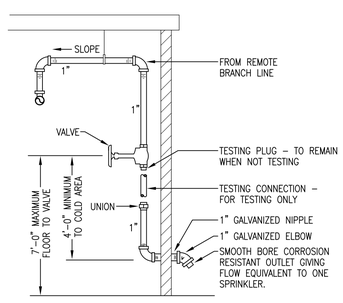

INSPECTORS TEST CONNECTION DETAIL

NOT TO SCALE

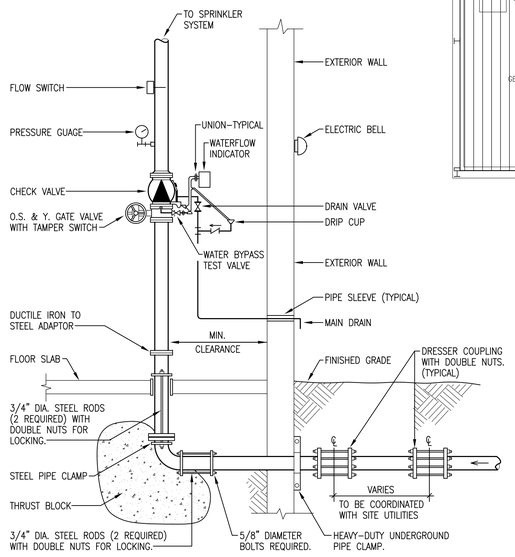

NOTE:
FIRE DEPARTMENT CONNECTION TO BE INSTALLED ON DOWN STREAM SIDE OF BACKFLOW PREVENTER.

WET PIPE FIRE RISER DETAIL

NOT TO SCALE

HOWARD M. YONGE LICENSE No. 32093 STATE OF FLORIDA PROFESSIONAL ENGINEER

H.M. YONGE & ASSOCIATES, INC.
CONSULTING ENGINEERS // EST. 1988
51 EAST GREGORY STREET
PENSACOLA, FLORIDA 32502
PHONE: (850)434-2661
CERTIFICATION OF AUTHORIZATION No: 5254
MECHANICAL ENGINEER: HOWARD M. YONGE, P.E. FLORIDA REG No. 32093
MECHANICAL ENGINEER: TIMOTHY J. MITCHELL, P.E. FLORIDA REG No. 66792
ELECTRICAL ENGINEER: ARUN T. VARGHESE, P.E. FLORIDA REG No. 76315

H. M. YONGE AND ASSOC. JOB# 23-158

Project
Addition to Pace Fire Station #4
Pace Fire Rescue District
Pace, Florida

Date: 04/30/24
Project No. 1223
Sheet No. FP1.1

Quina Grundhoefer Architects
400 West Romana Street Pensacola, Fl 32502
850-433-5575 qg@qgarchitects.com

PLUMBING LEGEND

CW	COLD WATER
ECO	EXTERIOR CLEANOUT
FD	FLOOR DRAIN
FPHB	FREEZE PROOF HOSE BIBB
HW	HOT WATER
WH	WATER HEATER
VTR	VENT THRU ROOF
	COLD WATER PIPING
	HOT WATER PIPING
	WASTE PIPING
	VENT PIPING
	BALL VALVE
	P-TRAP
	VENT THRU ROOF

PLUMBING FIXTURE CONNECTION SCHEDULE

MARK	FIXTURE	CONNECTIONS			DESCRIPTION
		WASTE	CW	HW	
P-1	WATER CLOSET (HANDICAPPED)	4"	1"	--	17" HIGH ELONGATED BOWL, FLOOR MOUNTED, FLOOR OUTLET, FLUSH VALVE TYPE. PROVIDE WHITE OPEN FRONT SEAT LESS COVER, FLUSH VALVE, AND FLEXIBLE SUPPLY WITH STOP. INSTALL PER ADA REQUIREMENTS.
P-2	LAVATORY (HANDICAPPED)	1 1/2"	1/2"	1/2"	WALL HUNG TYPE. PROVIDE WITH SINGLE LEVER FAUCET, GRID WASTE, 17 GA P-TRAP, FLEXIBLE SUPPLIES WITH STOPS, TRAP INSULATION KIT, AND FLOOR MOUNTED CONCEALED ARM CARRIER. INSTALL PER ADA REQUIREMENTS.
P-3	WATER COOLER (HANDICAPPED)	1 1/2"	1/2"	--	DUAL HEIGHT WITH BOTTLE FILLING STATION, BARRIER FREE, WALL MOUNTED TYPE WITH ROUGH BRASS STOPS, 17 GA. P-TRAP, AND WALL HANGER. INSTALL PER ADA REQUIREMENTS.
P-4	MOP SINK	3"	1/2"	1/2"	24"x24" TERRAZZO CORNER TYPE SERVICE BASIN WITH WALL MOUNTED SERVICE SINK FAUCET, VACUUM BREAKER, WALL BRACE, 3" STAINLESS STEEL DRAIN, AND STAINLESS STEEL RIM GUARD.
P-5	SHOWER	2"	1/2"	1/2"	FIELD CONSTRUCTED TILE ENCLOSURE WITH PRESSURE BALANCED ANTI-SCALD SHOWER VALVE, SHOWER HEAD, COMMERCIAL GRADE CURTAIN AND CURTAIN ROD, AND 2" STAINLESS STEEL DRAIN WITH 4"x4" SQUARE STRAINER.
P-5A	SHOWER (HANDICAPPED)	2"	1/2"	1/2"	FIELD CONSTRUCTED TILE ENCLOSURE WITH PRESSURE BALANCED ANTI-SCALD SHOWER VALVE, HAND HELD SHOWER HEAD, GRAB BARS, SEAT, COMMERCIAL GRADE CURTAIN AND CURTAIN ROD, AND 2" STAINLESS STEEL DRAIN WITH 4"x4" SQUARE STRAINER. INSTALL PER ADA REQUIREMENTS.
P-6	KITCHEN SINK	1 1/2"	1/2"	1/2"	33"x21"x10" MIN. DEEP, TWO COMPARTMENT, COUNTER MOUNTED STAINLESS STEEL SINK, DECK MOUNTED FAUCET, SPRAY ASSEMBLY, BASKET STRAINER, 1 1/2" P-TRAP, FLEXIBLE SUPPLIES WITH STOPS, GARBAGE DISPOSAL EQUAL TO INSINKERATOR, AND DISHWASHER TEE FITTING.
P-7	DISHWASHER	5/8"	--	1/2"	PROVIDED BY OTHERS. PLUMBING CONTRACTOR TO MAKE ALL WASTE AND WATER CONNECTIONS.
P-8	WASHING MACHINE BOX	2"	1/2"	1/2"	GALVANIZED STEEL, WALL RECESSED BOX WITH 1/2" HOT AND COLD WATER VALVES AND 2" CENTER DRAIN.
P-9	ICE MAKER BOX	---	3/8"	--	RECESSED BOX WITH 1/4 TURN ANGLE STOP.

NOTE: FIXTURES SHALL BE WHITE AND FAUCETS SHALL BE POLISHED CHROME UNLESS OTHERWISE INDICATED. REFER TO SPECIFICATIONS FOR ADDITIONAL INFORMATION. ALL HANDICAPPED FIXTURES SHALL BE ADA COMPLIANT AND INSTALLED PER ADA REQUIREMENTS. REFERENCE ARCHITECTURAL PLANS FOR INSTALLATION HEIGHTS. ALL DOMESTIC WATER PIPING ABOVE THE SLAB SHALL BE INSULATED INCLUDING PIPING INSIDE WALLS. PIPING SHALL NOT BE INSTALLED IN A MANNER IN WHICH CONTACT WITH MASONRY PRODUCTS IS ALLOWED.

TANKLESS WATER HEATER SCHEDULE

MARK TWH#	MINIMUM GAS INPUT BTU/HR	MAXIMUM GAS INPUT BTU/HR	GPM @ 35° RISE	ELECTRICAL DATA			REMARKS
				VOLTS	Hz	PHASE	
1	15,200	199,000	0.4 – 9.8	120	60	1	EQUAL TO RINNAI RL94eN WITH MCC-91 CONTROLLER AND RECESSED BOX AND ASSOCIATED PIPE COVERS. COORDINATE CONTROLLER LOCATION WITH OWNER. SET FOR 120° TEMPERATURE.

LAUNDRY EQUIPMENT SCHEDULE

MARK	FIXTURE	CW	HW	HW TEMP	WASTE	
L-1	WASHER MACHINE	3/4"	--	--	TRENCH DRAIN	SS

NOTE: LAUNDRY EQUIPMENT IS OWNER PROVIDED TO BE INSTALLED BY PLUMBING CONTRACTOR.

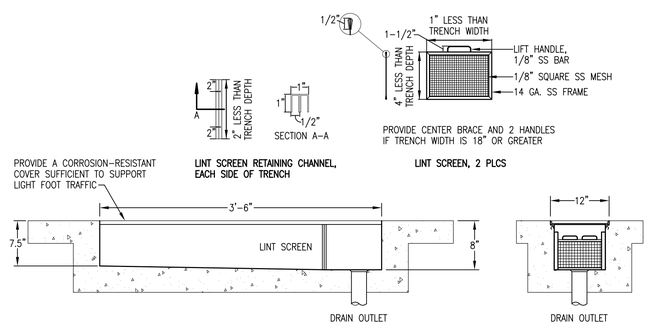

LAUNDRY TRENCH DRAIN WITH LINT TRAP DETAIL
NOT TO SCALE

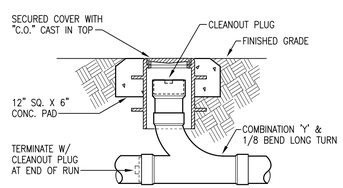

EXTERIOR CLEANOUT DETAIL
NOT TO SCALE

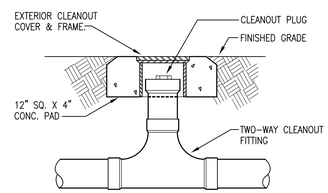

TWO-WAY CLEANOUT DETAIL
NOT TO SCALE

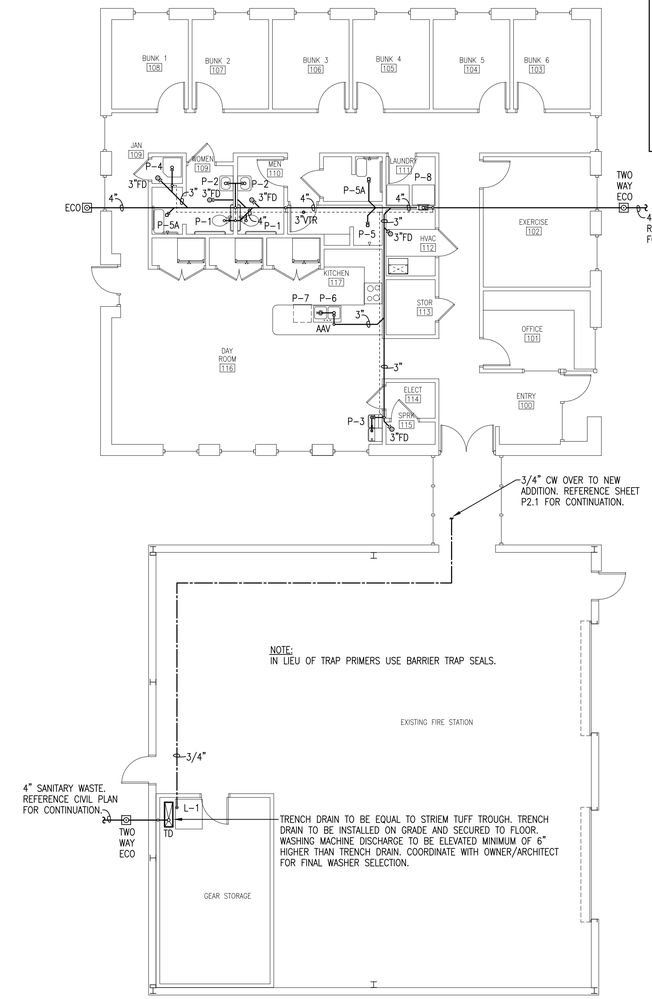

SANITARY WASTE PLAN
SCALE: 1/8" = 1'-0"
NORTH

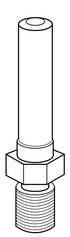

AIR PRELOAD PSI	FIXTURE UNITS	P.D.I. SYMBOL
60	1-11	A
60	12-32	B
60	33-60	C

NOTE: WATER HAMMER ARRESTORS TO BE LOCATED ABOVE ELEVATION OF CEILING AND BE ACCESSIBLE THROUGH CEILING TILE. IN AREAS WITHOUT CEILING ACCESS, PROVIDE 12"x12" ACCESS PANELS. ACCESS PANEL LOCATIONS TO BE COORDINATED WITH ARCHITECT AND APPROVED BY OWNER PRIOR TO INSTALLATION.

WATER HAMMER DETAIL
NOT TO SCALE

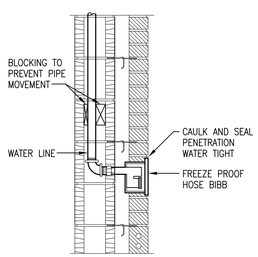

REFERENCE WALL SECTION PER ARCHITECTURAL DRAWINGS

FREEZE PROOF HOSE BIBB DETAIL
NOT TO SCALE

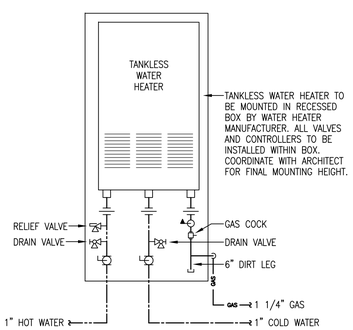

GAS FIRED TANKLESS WATER HEATER DETAIL
NOT TO SCALE

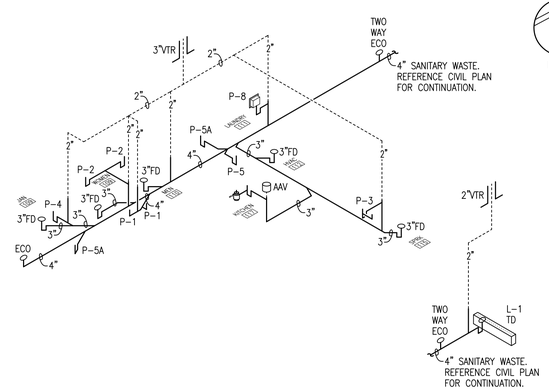

SANITARY WASTE RISER
NOT TO SCALE

H.M. YONGE & ASSOCIATES, INC.
CONSULTING ENGINEERS // EST. 1988
51 EAST GREGORY STREET
PENSACOLA, FLORIDA 32502
PHONE: (850)434-2661
CERTIFICATION OF AUTHORIZATION No: 5254
MECHANICAL ENGINEER: HOWARD M. YONGE, P.E. FLORIDA REG No. 32093
MECHANICAL ENGINEER: TIMOTHY J. MITCHELL, P.E. FLORIDA REG No. 66792
ELECTRICAL ENGINEER: ARUN T. VARGHESE, P.E. FLORIDA REG No. 76315

H. M. YONGE AND ASSOC. JOB# 23-158

HOWARD M. YONGE LICENSE No. 32093 STATE OF FLORIDA PROFESSIONAL ENGINEER

Project
Addition to Pace Fire Station #4
Pace Fire Rescue District
Pace, Florida

Date: 04/30/24
Project No. 1223
Sheet No. P1.1

MEP: W:\Jobs_Active\23158 Pace Fire Station #4\23158P1.dwg, 03/07/24 12:03

Quina Grundhoefer Architects

400 West Romana Street Pensacola, Fl 32502
850-433-5575 qg@qgarchitects.com

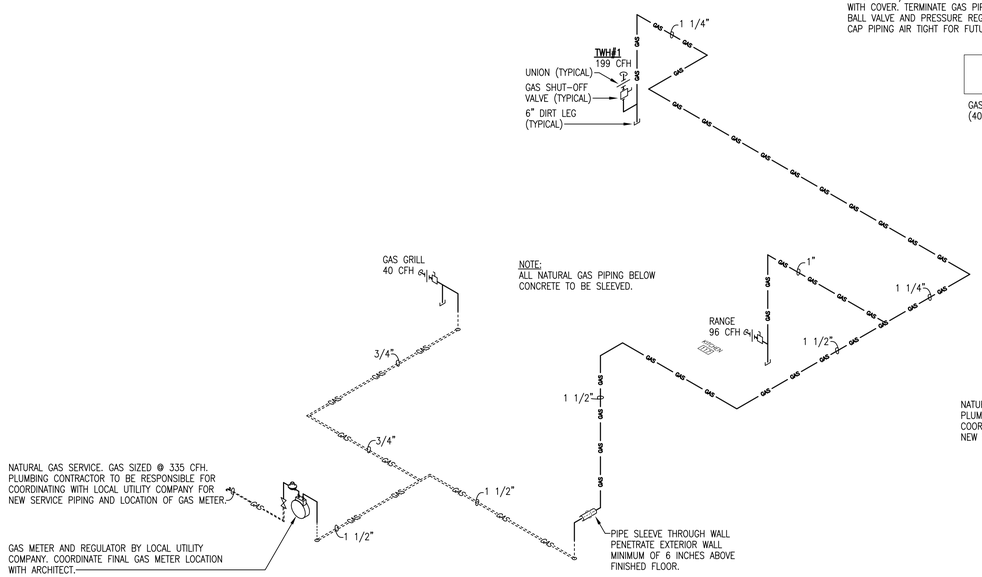

NATURAL GAS RISER
NOT TO SCALE

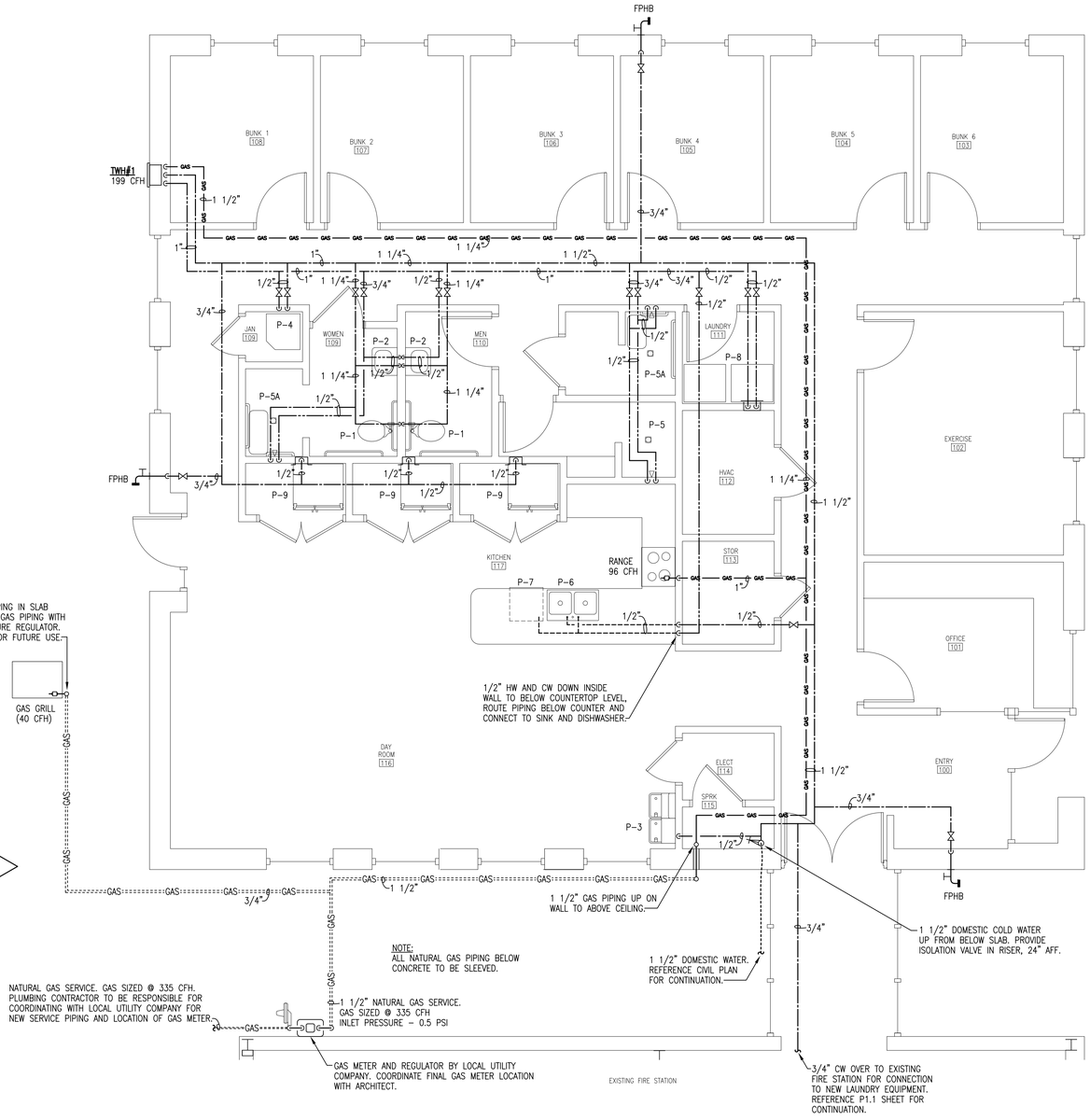

NORTH

DOMESTIC WATER PLAN
SCALE: 1/4" = 1'-0"

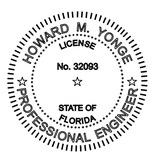

H.M. YONGE & ASSOCIATES, INC.
CONSULTING ENGINEERS // EST. 1988
51 EAST GREGORY STREET
PENSACOLA, FLORIDA 32502
PHONE: (850)434-2661
CERTIFICATION OF AUTHORIZATION No: 5254
MECHANICAL ENGINEER: HOWARD M. YONGE, P.E. FLORIDA REG No. 32093
MECHANICAL ENGINEER: TIMOTHY J. MITCHELL, P.E. FLORIDA REG No. 66792
ELECTRICAL ENGINEER: ARUN T. VARGHESE, P.E. FLORIDA REG No. 76315

H. M. YONGE AND ASSOC. JOB# 23-158

Project
Addition to Pace Fire Station #4
Pace Fire Rescue District
Pace, Florida

Date: 04/30/24
Project No. 1223
Sheet No. P2.1

Quina Grundhoefer Architects

400 West Romana Street Pensacola, Fl 32502
850-433-5575 qgi@qgarchitects.com

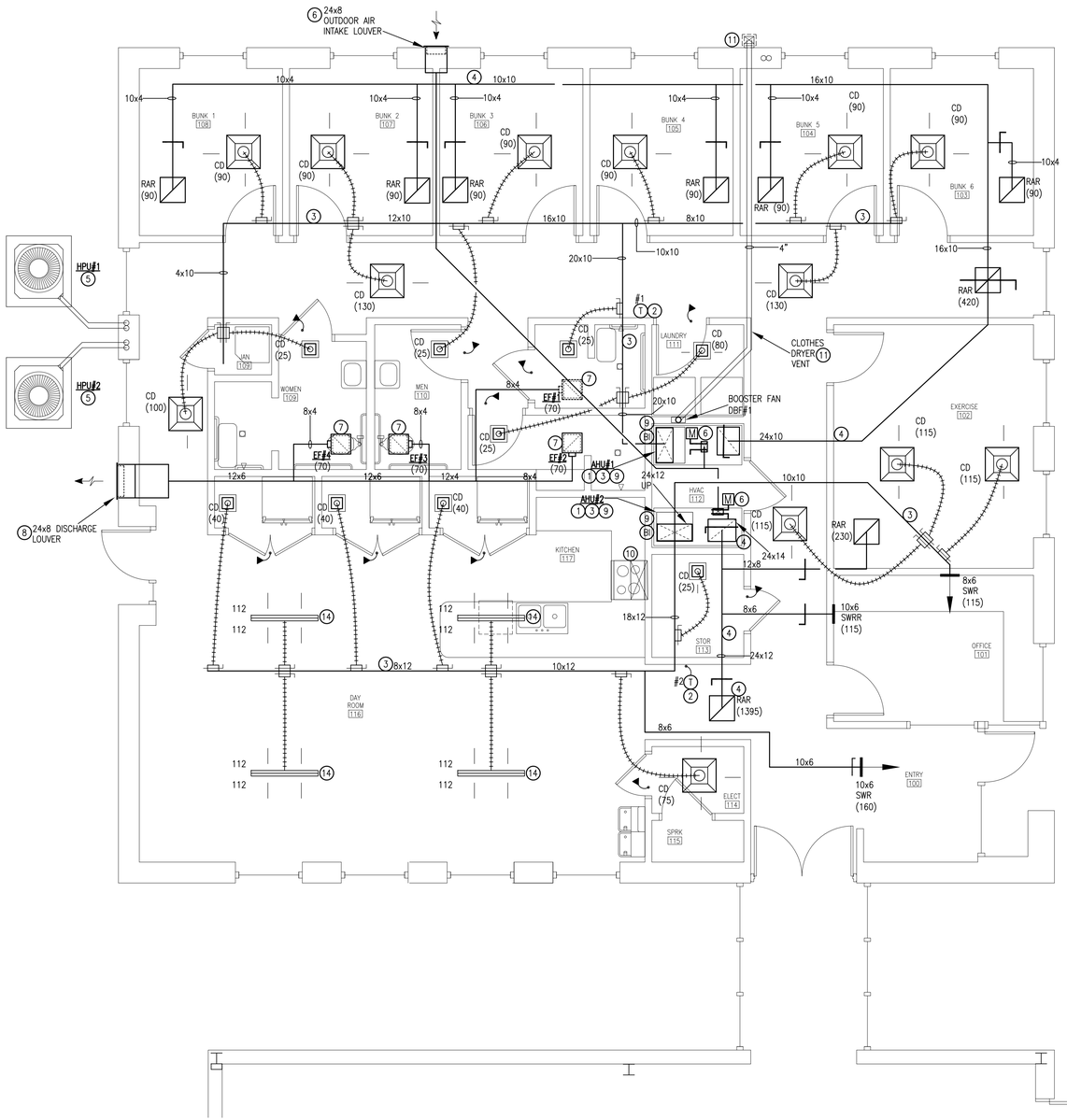

HVAC NEW WORK PLAN

SCALE: 1/4" = 1'-0"

NORTH

HVAC NEW WORK KEY NOTES:

1. MOUNT AIR HANDLING UNIT ON RETURN AIR PLENUM CONSTRUCTED OF NON-COMBUSTIBLE MATERIALS. INTERIOR OF PLENUM SHALL BE LINED WITH 1" THICK FIBER BOARD HAVING METALIZED VAPOR BARRIER TO AIR STREAM. ADJUST FINAL DIMENSIONS OF PLENUM TO ACCOMMODATE INSTALLATION OF A FLOOR DRAIN. COORDINATE FINAL LOCATION WITH PLUMBING CONTRACTOR. ENSURE FILTER TRAY REMAINS COMPLETELY ACCESSIBLE. INCLUDE A FLOAT SWITCH IN CONDENSATE DRAIN LINE THAT SHALL AUTOMATICALLY SHUT DOWN UNIT AS DRAINAGE SYSTEM FLOODS. ROUTE FULLY INSULATED CONDENSATE DRAIN TO FLOOR DRAIN. SUPPORT DRAIN PIPING WITH UNISTRUT TYPE SUPPORT SYSTEM IN HORIZONTAL AND VERTICAL POSITIONS
2. WALL MOUNTED TEMPERATURE CONTROLLER TO BE SEVEN DAY PROGRAMMABLE WITH DIGITAL DISPLAY, MODE SELECTION, OCCUPIED/UNOCCUPIED SCHEDULING, AUTOMATIC CHANGE OVER AND BATTERY BACK-UP.
3. ROUTE SUPPLY AIR DUCT UP FROM FULL SIZE OF AIR HANDLING UNIT OPENING AND TRANSITION TO INDICATED DUCT SIZE. INSTALL DUCT ABOVE CEILING FOR CONNECTION TO SUPPLY AIR DEVICES. OFFSET DUCT TO AVOID OBSTRUCTIONS AND INTERFERENCES. CONNECT AIR DEVICES TO TRUNK DUCT WITH BRANCH DUCT HAVING A MANUAL VOLUME DAMPER. BALANCE AIR DEVICES TO INDICATED AIR FLOW.
4. RETURN AIR DUCT SHALL BE DIRECTLY CONNECTED TO RETURN AIR PLENUM AND ROUTED UP TO ABOVE CEILING AND OVER GENERALLY AS INDICATED. PROVIDE DAMPERS IN DUCT CONNECTING TO RETURN AIR DEVICES. BALANCE EACH AIR DEVICE TO THE INDICATED AIR FLOW. OFFSET DUCT TO AVOID OBSTRUCTIONS. INCLUDE A MANUAL VOLUME DAMPER IN RETURN AIR DUCT WITHIN 36 INCHES OF PLENUM.
5. OUTDOOR HEAT PUMP SECTION TO BE MOUNTED ON 4" CONCRETE PAD 6" LARGER THAN UNIT IN ALL DIRECTIONS. ROUTE REFRIGERANT PIPING THROUGH EXTERIOR WALL INTO PIPING CHASE AND UP TO ABOVE CEILING AND OVER TO RESPECTIVE AIR HANDLING UNIT. SECURE UNIT TO PAD AT EACH CORNER WITH MECHANICAL FASTENER.
6. WALL MOUNTED (MIAMI-DADE CERTIFIED) WEATHERPROOF OUTSIDE AIR INTAKE LOUVER. LOUVER SHALL BE 16X16 WITH FULL SIZE INSULATED PLENUM BEHIND. CONNECT OUTDOOR AIR INTAKE TO LOUVER AND ROUTE ABOVE CEILING OVER TO MECHANICAL CLOSET FOR CONNECTION TO RETURN AIR PLENUMS. INCLUDE A MANUAL VOLUME DAMPER AND MOTORIZED DAMPER IN EACH DUCT NEAR PLENUM. BALANCE MANUAL VOLUME DAMPER TO INDICATED AIR FLOW AND INTERLOCK MOTORIZED DAMPER WITH OUTDOOR HEAT PUMP UNIT. AS HEAT PUMP UNIT IS OPERATING DAMPER SHALL BE OPEN AND OTHERWISE CLOSED.
7. CEILING MOUNTED EXHAUST FAN WITH 8X4 DUCT ROUTED FOR DISCHARGE THROUGH EXTERIOR WALL LOUVER. CONNECT DUCT TO FULL SIZE PLENUM BEHIND DISCHARGE LOUVER.
8. WALL MOUNTED (MIAMI-DADE CERTIFIED) EXHAUST AIR LOUVER. LOUVER SHALL HAVE FULL SIZE INSULATED PLENUM EXTENDED FROM BEHIND LOUVER FOR CONNECTION OF NEW EXHAUST AIR SYSTEMS. ADJUST FINAL LENGTH OF PLENUM TO ACCOMMODATE DUCT CONNECTIONS.
9. BI-POLAR IONIZATION AIR PURIFICATION SYSTEM INSTALLED IN SUPPLY AIR DUCT PER MANUFACTURER'S INSTRUCTIONS. INTERLOCK DEVICE WITH AIR HANDLING UNIT SUCH THAT AS UNIT IS OPERATING SO SHALL THE DEVICE BE OPERATING AND OTHERWISE BOTH SHALL NOT BE OPERATING.
10. KITCHEN HOOD TO BE RECIRCULATING TYPE. MECHANICAL CONTRACTOR TO INSTALL WITH INTEGRAL FIRE SUPPRESSION SYSTEM.
11. CLOTHES DRYER EXHAUST VENT ROUTED FROM DRYER UP IN WALL TO ABOVE CEILING AND OVER FOR CONNECTION TO DISCHARGE VENT ON EXTERIOR WALL. DISCHARGE VENT SHALL HAVE BACKDRAFT FLAPPER AND BE A MINIMUM OF 10 FEET FROM OUTDOOR AIR INTAKE LOUVER. INSTALL VENT SYSTEM PER FMC. INCLUDE A BOOSTER FAN IN DRYER VENT AND A LINT TRAP. FAN AND LINT TRAP SHALL BE IN WALL BEHIND AND ABOVE DRYER. CONTROL FROM FAN SENSOR.
12. WALL MOUNTED PROPELLER TYPE EXHAUST FAN. FAN SHALL BE INSTALLED BEHIND WALL LOUVER WITH BACK DRAFT DAMPER AND BIRD SCREEN. INCLUDE ROOM SIDE GUARD. ADJUST FINAL POSITION OF FAN TO ACCOMMODATE ARCHITECTURAL PLANS. FAN SHALL BE WITHIN 24 INCHES OF CEILING STRUCTURE. CONTROL OF EXHAUST FAN SHALL BE FROM A MANUALLY OPERATED WALL SWITCH.
13. WALL LOUVER MOUNTED LOW ON WALL WITH BOTTOM WITHIN 18 INCHES ABOVE FLOOR. INCLUDE A BIRD SCREEN BEHIND LOUVER.
14. LINEAR SLOT DIFFUSER 48 INCHES LONG WITH 1 INCH SLOT. PROVIDE FULL SIZE ABOVE DIFFUSER FOR CONNECTION OF 10 INCH ROUND BRANCH DUCT .

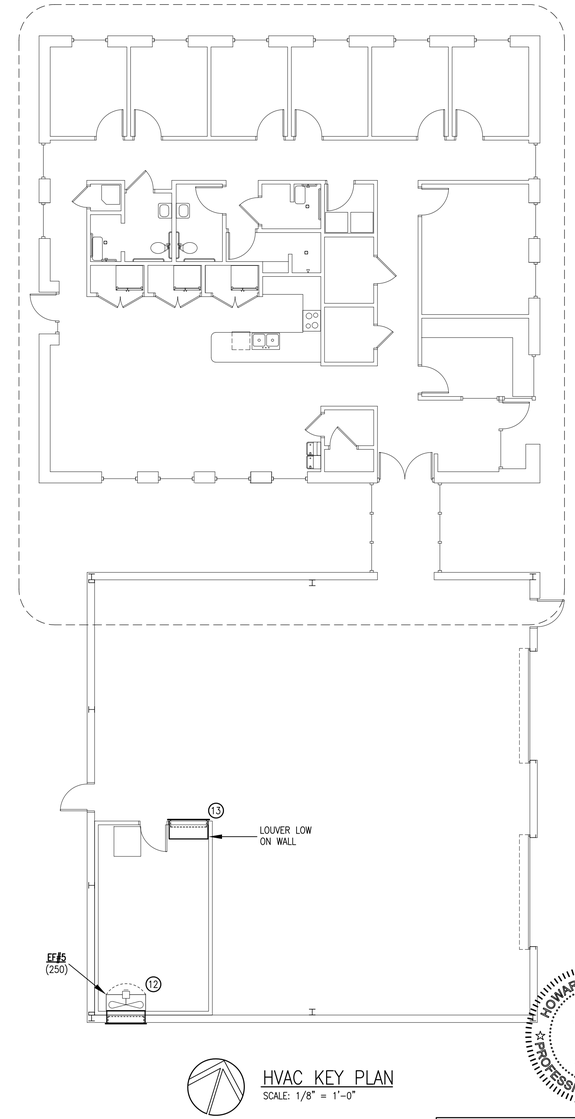

HVAC KEY PLAN

SCALE: 1/8" = 1'-0"

NORTH

HOWARD M. YONGE LICENSE No. 32093 STATE OF FLORIDA PROFESSIONAL ENGINEER

H.M. YONGE & ASSOCIATES, INC.
CONSULTING ENGINEERS // EST. 1988
51 EAST GREGORY STREET
PENSACOLA, FLORIDA 32502
PHONE: (850)434-2661
CERTIFICATION OF AUTHORIZATION No. 5254
MECHANICAL ENGINEER: HOWARD M. YONGE, P.E. FLORIDA REG No. 32093
MECHANICAL ENGINEER: TIMOTHY J. MITCHELL, P.E. FLORIDA REG No. 66792
ELECTRICAL ENGINEER: ARUN T. VARGHESE, P.E. FLORIDA REG No. 76315

H. M. YONGE AND ASSOC. JOB# 23-158

Project
Addition to Pace Fire Station #4
Pace Fire Rescue District
Pace, Florida

Date: 04/30/24

Project No. 1223

Sheet No. M1.1

Quina Grundhoefer Architects

400 West Romana Street Pensacola, Fl 32502
850-433-5575 qg@qgarchitects.com

SPLIT SYSTEM AIR TO AIR HEAT PUMP UNIT SCHEDULE

MARK AHU/ HPU#	AREA SERVED	AHU DATA								# OF HEAT STAGES	STRIP HEAT KW			COOLING CAPACITY @ ARI STANDARD CONDITIONS					HEATING CAPACITY @ ARI STANDARD CONDITIONS			MIN. SEER	COMPR. RLA	OUTDOOR FAN FLA	HEAT PUMP ELECTRICAL DATA					REMARKS
		UNIT TONNAGE	TOTAL CFM	OA CFM	ESP	MOTOR HP	VOLTS	Hz	PHASE			MCA	MOCP	EDB °F	EWB °F	AMBIENT °F	TOTAL BTU/HR	SENSIBLE BTU/HR	EDB °F	AMBIENT °F	TOTAL BTU/HR				VOLTS	Hz	PHASE	MCA	MOCP	
1	BUNK ROOM AREA	3	1080	120	0.5"	0.5	208	60	3	2	10.80	42	45	80	67	95	36,000	25,200	70	47	34,200	17.0	11.6	0.71	208	60	3	15	25	1 2 3
2	DAY ROOM	5	1740	180	0.5"	1.0	208	60	3	2	10.80	46	50	80	67	95	60,000	43,000	70	47	57,000	17.0	16.2	1.30	208	60	3	22	35	1 2 3

NOTES:

1. THE HEAT PUMP SHALL OPERATE AS STAGE 1 HEATING. THE ELECTRIC STRIP HEAT SHALL OPERATE AS STAGE 2 HEATING AND DEFROST CYCLE. DURING STAGE 2 HEATING, THE COMPRESSOR AND THE ELECTRIC STRIP HEAT SHALL OPERATE SIMULTANEOUSLY.
2. PROVIDE SINGLE POINT CONNECTION FOR AIR HANDLING UNIT BLOWER AND STRIP HEAT.
3. BASIS OF DESIGN: TRANE MODELS – 4TWA7 AND GAM5 SERIES.

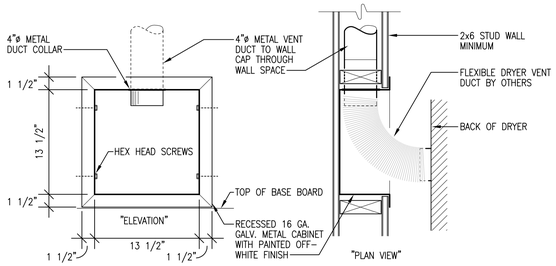

TYPICAL DRYER VENT BOX DETAIL

NOT TO SCALE

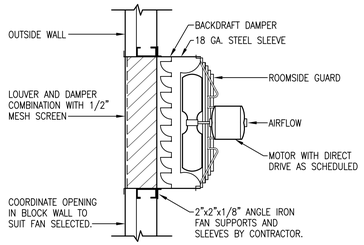

NOTE: MECHANICAL CONTRACTOR SHALL SELECT FAN TO DIMENSIONALLY FIT LOUVER SPACE INDICATED ON DRAWING. VERIFY DIMENSIONS IN FIELD. BLANK OFF UNUSED PORTION OF LOUVER.

WALL MOUNTED PROPELLER FAN DETAIL

NOT TO SCALE

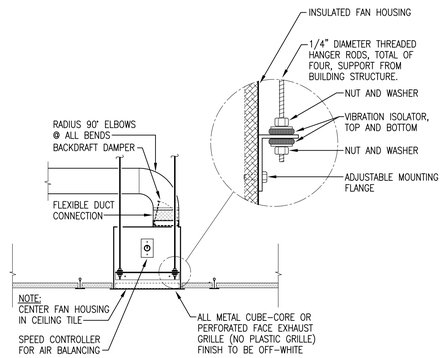

NOTE: SUPPORT RODS TO ROOF STRUCTURE – DO NOT SUPPORT FAN WITH CEILING SYSTEM

TYPICAL EXHAUST FAN DETAIL

NOT TO SCALE

MECHANICAL LEGEND

AHU	AIR HANDLING UNIT
CD	CEILING DIFFUSER
CFM	CUBIC FEET PER MINUTE
EF	EXHAUST FAN
MVD	MANUAL VOLUME DAMPER
OA	OUTDOOR AIR
RA	RETURN AIR
RAR	RETURN AIR REGISTER
SA	SUPPLY AIR
TYP	TYPICAL
	CEILING DIFFUSER WITH THROW INDICATION
	EXHAUST/RETURN AIR DEVICE
	FLEXIBLE DUCT
	DUCTWORK (DIMENSIONS: WIDTH X HEIGHT)
W X H	FLEX DUCT TAKE-OFF WITH AIR-SCOOP, SPIN-IN TAP AND BALANCING DAMPER
	ELBOW WITH TURNING VANES
	BULLHEAD TEE WITH TURNING VANES AND SPLITTER DAMPER
	45° SHOE-FITTING TAKE-OFF
	DUCT CONNECTION OVER AIR DEVICE
	RETURN AIR DUCT IN SECTION
	SUPPLY AIR DUCT IN SECTION
M	MOTORIZED DAMPER
T #	THERMOSTAT WITH EQUIPMENT # SERVED MOUNT 48" A.F.F.
	5/8" DOOR UNDERCUT
	MANUAL VOLUME DAMPER

AIR DEVICE SCHEDULE

MARK	CFM	MAX. NC	AIR DEVICE SIZE	DUCT CONNECTION SIZE	REMARKS (TYPE)
0–75	0–75	25	6"x6"	6"ø	CD
76–150	76–150	25	9"x6"	7"ø	CD
151–200	151–200	25	9"x9"	8"ø	CD
201–300	201–300	25	9"x9"	9"ø	CD
201–300	201–300	25	9"x12"	10"ø	CD
---	---	--	---	--	--
0–150	0–150	25	8"x8"	SEE PLANS	RAR
151–450	151–450	25	12"x12"	SEE PLANS	RAR
451–600	451–600	25	14"x14"	SEE PLANS	RAR
601–1000	601–1000	25	18"x18"	SEE PLANS	RAR
1001–2000	1001–2000	25	24"x24"	SEE PLANS	RAR
---	---	--	---	--	--
0–400	0–400	25	12"x8"	SEE PLANS	SWR
0–400	0–400	25	18"x10"	SEE PLANS	SWRR

NOTES:

1. PROVIDE 24"x24" PANEL FOR ALL AIR DEVICES IN LAY-IN CEILING.
2. PROVIDE DUCT CONNECTION SIZE SHOWN UNLESS OTHERWISE NOTED ON PLANS.
3. AIR DEVICE SIZES SHOWN ON PLANS TAKE PRECEDENCE OVER THIS SCHEDULE.

FAN SCHEDULE

MARK	TOTAL CFM	TSP IN WC	MAX RPM	TYPE DRIVE	TYPE FAN	INTERLOCK WITH	MOTOR HP/WATTS	MAX SONES	ELECTRICAL DATA			REMARKS
									VOLTS	Hz	PHASE	
EF#1	70	0.5	777	DIRECT	CEILING MOUNTED	LIGHT SWITCH	80 W	2.0	115	60	1	1 2 3 4 5
EF#2	70	0.5	777	DIRECT	CEILING MOUNTED	LIGHT SWITCH	80 W	2.0	115	60	1	1 2 3 4 5
EF#3	70	0.5	777	DIRECT	CEILING MOUNTED	LIGHT SWITCH	80 W	2.0	115	60	1	1 2 3 4 5
EF#4	70	0.5	777	DIRECT	CEILING MOUNTED	LIGHT SWITCH	80 W	2.0	115	60	1	1 2 3 4 5
EF#5	250	0.5	777	DIRECT	WALL MOUNTED	WALL SWITCH	1/8	8.0	115	60	1	1 2 3 4 5
DBF#1	135	0.5	2500	DIRECT	IN LINE	HEAT SENSOR	0.65 A	·	120	60	1	6

NOTES:

1. PROVIDE WITH FAN SPEED CONTROLLER, CONTROLLER SHALL BE MOUNTED TO FAN.
2. PROVIDE WITH ALUMINUM GRILLE. PLASTIC GRILLES SHALL NOT BE ACCEPTABLE
3. PROVIDE WITH INTEGRAL BACKDRAFT DAMPER.
4. PROVIDE WITH INTEGRAL DISCONNECT.
5. PROVIDE WITH THERMAL OVERLOAD.
6. BASIS OF DESIGN – REVERSOMATIC TLD-200.

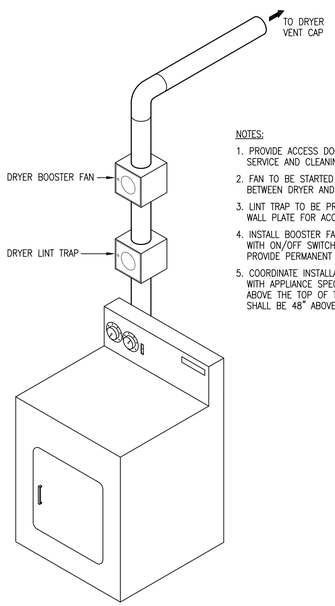

NOTES:

1. PROVIDE ACCESS DOOR AT THE FAN AND FOR SERVICE AND CLEANING.
2. FAN TO BE STARTED BY HEAT SENSOR IN DUCTWORK BETWEEN DRYER AND LINT TRAP.
3. LINT TRAP TO BE PROVIDED WITH INTEGRAL FINISHED WALL PLATE FOR ACCESS AND CLEANING.
4. INSTALL BOOSTER FAN 72" ABOVE FINISHED FLOOR WITH ON/OFF SWITCH LOCATED ON ADJACENT WALL. PROVIDE PERMANENT LABEL ON SWITCH.
5. COORDINATE INSTALLATION HEIGHT OF THE LINT TRAP WITH APPLIANCE SPEC'S TO ENSURE THE TRAP IS ABOVE THE TOP OF THE DRYER. THE MINIMUM HEIGHT SHALL BE 48" ABOVE FINISHED FLOOR.

DRYER BOOSTER FAN DETAIL

NOT TO SCALE

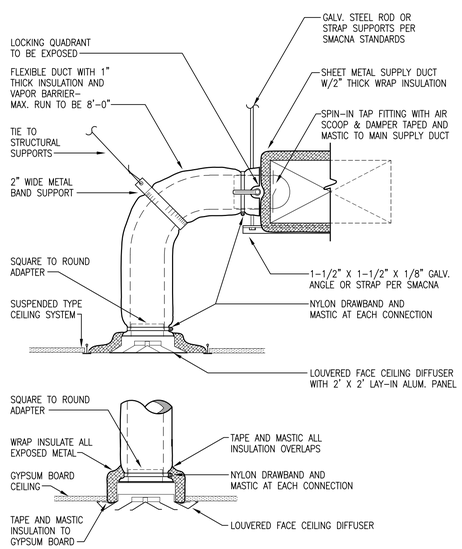

TYPICAL CEILING DIFFUSER DETAIL

NOT TO SCALE

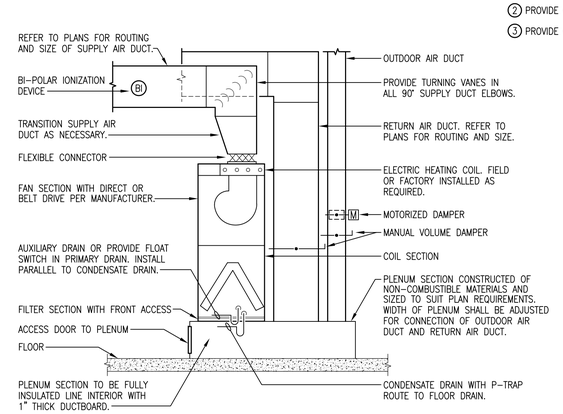

TYPICAL VERTICAL AHU DETAIL

NOT TO SCALE

HOWARD M. YONGE LICENSE No. 32093 STATE OF FLORIDA PROFESSIONAL ENGINEER

H.M. YONGE & ASSOCIATES, INC.
CONSULTING ENGINEERS // EST. 1988
51 EAST GREGORY STREET
PENSACOLA, FLORIDA 32502
PHONE: (850)434-2661
CERTIFICATION OF AUTHORIZATION No: 5254
MECHANICAL ENGINEER: HOWARD M. YONGE, P.E. FLORIDA REG No. 32093
MECHANICAL ENGINEER: TIMOTHY J. MITCHELL, P.E. FLORIDA REG No. 66792
ELECTRICAL ENGINEER: ARUN T. VARGHESE, P.E. FLORIDA REG No. 76315

H. M. YONGE AND ASSOC. JOB# 23-158

Project
Addition to Pace Fire Station #4
Pace Fire Rescue District
Pace, Florida

Date: 04/30/24
Project No. 1223

Sheet No.
M2.1

ELECTRICAL SYMBOL LEGEND

SYMBOL	DESCRIPTION
	LIGHTING FIXTURE. LETTER(S) DENOTE TYPE – SEE LIGHTING FIXTURE SCHEDULE.
	EXIT LIGHT, DARKENED QUADRANTS INDICATE ILLUMINATED FACES, ARROWS AS INDICATED. LETTER(S) DENOTE TYPE – SEE LIGHTING FIXTURE SCHEDULE.
	PANELBOARD – SEE RESPECTIVE PANELBOARD SCHEDULE. PROVIDE MECHANICALLY FASTENED PHENOLIC LABEL.
A–1,3,5	BRANCH CIRCUIT CONDUIT RUN CONCEALED IN WALL OR ABOVE CEILING. ARROWS INDICATE CIRCUIT HOMERUN, HASHMARKS INDICATE NUMBER OF CONDUCTORS, ABSENCE OF HASHMARKS INDICATES TWO CONDUCTORS PLUS GROUND. "A" DENOTES PANELBOARD SERVING CIRCUIT, "1" INDICATES CIRCUIT BREAKER SPACE IN PANELBOARD. SEE RESPECTIVE PANEL CIRCUIT SCHEDULE. MINIMUM CONDUCTOR SIZE = #12 AWG.
J	HEAVY DUTY SAFETY SWITCH – SIZE AND TYPE AS NOTED. PROVIDE MECHANICALLY FASTENED PHENOLIC LABEL.
	ELECTRIC MOTOR
$	20 AMP, 120/277 VAC SINGLE POLE TOGGLE SWITCH – FLUSH WALL MOUNTED 48" A.F.F. UNLESS NOTED OTHERWISE. SUBSCRIPT INDICATES AS FOLLOWS: 3 – 20 AMP, 120/277 VAC THREE WAY TOGGLE SWITCH 4 – 20 AMP, 120/277 VAC FOUR WAY TOGGLE SWITCH. M – FRACTIONAL HP SWITCH 30 AMP EQUAL TO HUBBELL HBL7832D OR HBL7810D, AS REQUIRED. PROVIDE PHENOLIC LABEL. DT – DUAL TECHNOLOGY WALL SWITCH WATTSTOPPER DSW–100 OR EQUAL. D – LOW VOLTAGE DIMMER, 0–10V DIMMER – FLUSH WALL MOUNTED 48" A.F.F. UNLESS NOTED OTHERWISE. LOW VOLTAGE WIRING NOT INDICATED BUT SHALL BE PROVIDED TO EACH FIXTURE WITHIN THE SPACE IT SERVES.
WP	INDICATES WIRING DEVICE WITH WEATHER PROOF COVER PLATE. SHALL BE "EXTRA DUTY" TYPE.
C	INDICATES DEVICE FLUSH MOUNTED HORIZONTALLY 42" AFF OR 6" ABOVE COUNTERTOP OR IN BACKSPLASH. VERIFY COUNTER HEIGHT PRIOR TO ROUGH–IN.
	20 AMP, 125 VAC, 2–POLE, 3–WIRE, GROUNDING TYPE, DUPLEX RECEPTACLE. FLOOR BOX TYPE 18" A.F.F. UNLESS NOTED OTHERWISE.
	20 AMP, 125 VAC, 2–POLE, 3–WIRE, GROUNDING TYPE, DUPLEX RECEPTACLE. FLUSH WALL MOUNTED 18" A.F.F. UNLESS NOTED OTHERWISE.
TV	20 AMP, 125 VAC, 2–POLE, 3–WIRE, GROUNDING TYPE, DUPLEX RECEPTACLE. FLUSH WALL MOUNTED DIRECTLY ADJACENT TO CATV OUTLET.
	20 AMP, 125 VAC, 2–POLE, 3–WIRE, GROUND FAULT CIRCUIT INTERRUPTED TYPE DUPLEX RECEPTACLE FLUSH WALL–MOUNTED 18" A.F.F. UNLESS NOTED OTHERWISE.
	SPECIAL NEMA TYPE RECEPTACLE. PLUG TO MATCH EQUIPMENT BEING PROVIDED.
	RETRACTABLE PLUG REEL.
J	JUNCTION BOX.
P	POWER RELAY. PROVIDE WITH NEMA 1 ENCLOSURE. MOUNT IN ACCESSIBLE SPACE. SEE MECHANICAL SCHEDULES FOR INTERLOCK REQUIREMENTS.
	DUPLEX VOICE/DATA OUTLET IN A 4" SQUARE BOX WITH 2 GANG EXTENSION RING. DEVICE MOUNTED 18" AFF UNLESS NOTED OTHERWISE WITH 3/4" CONDUIT UP IN WALL TO 6" ABOVE ACCESSIBLE CEILING. PROVIDE CONDUIT BUSHINGS. PROVIDE 2–CAT5E VOICE/DATA CABLES BACK TO COMMUNICATIONS BACKBOARD. PROVIDE 2–PORT COVER PLATE EQUAL TO COOPER CAT# 5520. PROVIDE TERMINATION AT OUTLET AND COMMUNICATION BACKBOARD.
	CABLE TV OUTLET. COORDINATE MOUNTING HEIGHT WITH ARCHITECT PRIOR TO ANY ROUGH–IN. PROVIDE SINGLE–GANG JUNCTION BOX. PROVIDE 3/4" CONDUIT UP IN WALL TO 6" ABOVE ACCESSIBLE CEILING. PROVIDE CONDUIT BUSHINGS. PROVIDE 1–CATV COAX CABLE BACK TO COMMUNICATIONS BACKBOARD. PROVIDE TERMINATION AT OUTLET AND COMMUNICATION BACKBOARD.
SP	16 GAUGE WIRE, BELDEN 8471, 2 CONDUCTOR LOUD SPEAKER WIRE.
SA	CEILING MOUNTED SPEAKER BOGEN MODEL S86T725PG8WBRVK.
VC	WALL–MOUNTED VOLUME CONTROL BOGEN MODEL AT–10A WITH J–BOX.
HS	WALL–MOUNTED SPEAKER BOGEN MODEL WB1EZ WALL BAFFLE SPEAKER.
S	WALL–MOUNTED SPEAKER BOGEN MODEL SPT15A.
F	FIRE ALARM SYSTEM PULL STATION – SEMI FLUSH MOUNTED 48" A.F.F. TO CENTER UNLESS NOTED OTHERWISE. PROVIDE CLEAR PULL STATION LIFT COVER GUARD WITH STOPPER II.
F	FIRE ALARM SYSTEM AUDIO / VISUAL DEVICE SEMI FLUSH WALL MOUNTED 80" A.F.F. OR 6" FROM BOTTOM OF CEILING WHICHEVER IS LOWER. STROBES SHALL BE 75cd UNLESS NOTED OTHERWISE. ALL STROBES IN COMMON AREAS OR CORRIDORS SHALL BE SYNCHRONIZED.
F	FIRE ALARM SYSTEM VISUAL DEVICE SEMI FLUSH WALL MOUNTED 80" A.F.F. OR 6" FROM BOTTOM OF CEILING WHICHEVER IS LOWER. STROBES SHALL BE 75cd UNLESS NOTED OTHERWISE. ALL STROBES IN COMMON AREAS OR CORRIDORS SHALL BE SYNCHRONIZED.
SD	CEILING MOUNTED FIRE ALARM SYSTEM PHOTOELECTRIC TYPE SMOKE DETECTOR.
FS	SPRINKLER SYSTEM FLOW SWITCH. FURNISHED BY FIRE ALARM SYSTEM SUPPLIER, INSTALLED BY FIRE PROTECTION (SPRINKLER) SYSTEM CONTRACTOR, AND CONNECTED TO FIRE ALARM SYSTEM CONTROL PANEL BY FIRE ALARM SYSTEM CONTRACTOR.
TS	PROTECTION (SPRINKLER) SYSTEM CONTRACTOR, AND CONNECTED TO FIRE ALARM SYSTEM CONTROL PANEL BY FIRE ALARM SYSTEM CONTRACTOR.
S	FIRE ALARM SYSTEM DUCT MOUNTED PHOTOELECTRIC SMOKE DETECTOR COMPLETE WITH HOUSING AND AIR SAMPLING TUBES. "S" DENOTES DETECTOR IN SUPPLY DUCT, "R" DENOTES DETECTOR IN RETURN DUCT.
CO	CEILING/WALL MOUNTED COMBINATION SMOKE ALARM AND CARBON MONOXIDE DETECTOR, AC PRIMARY WITH BATTERY BACKUP SECONDARY WITH 85dB ALARM HORN, PHOTOELECTRIC AND CO SENSORS, AND SOUNDER BASE. INTERCONNECT ALL DETECTORS TO SOUND WHEN ONE GOES INTO ALARM. WHERE WALL MOUNTED, THE SMOKE ALARM SHALL BE LOCATED NO FARTHER THAN 12" FROM THE ADJOINING CEILING SURFACE. DEVICE LOCATED WITHIN 20'–0" OF A STATIONARY OR FIXED COOKING APPLIANCE SHALL BE LISTED FOR RESISTANCE TO COMMON NUISANCE SOURCES FROM COOKING. ADDITIONAL INSTALLATION PLACEMENT REQUIREMENTS SHALL BE COORDINATED WITH CHAPTER 29 OF NFPA 72.
S	CEILING/WALL MOUNTED SMOKE ALARM, AC PRIMARY WITH BATTERY BACKUP SECONDARY WITH 85dB ALARM HORN, PHOTOELECTRIC SENSOR. INTERCONNECT ALL DETECTORS TO SOUND WHEN ONE GOES INTO ALARM. WHERE WALL MOUNTED, THE SMOKE ALARM SHALL BE LOCATED NO FARTHER THAN 12" FROM THE ADJOINING CEILING SURFACE. DEVICE LOCATED WITHIN 20'–0" OF A STATIONARY OR FIXED COOKING APPLIANCE SHALL BE LISTED FOR RESISTANCE TO COMMON NUISANCE SOURCES FROM COOKING. ADDITIONAL INSTALLATION PLACEMENT REQUIREMENTS SHALL BE COORDINATED WITH CHAPTER 29 OF NFPA 72.
R	FIRE ALARM SYSTEM FAN SHUTDOWN RELAY – MOUNTED AT EQUIPMENT.
FAC	FIRE ALARM CONTROL PANEL.
ANN	FIRE ALARM REMOTE ANNUNCIATOR.
GANN	GENERATOR REMOTE ANNUNCIATOR.

SYMBOLS NOTES:

1. ALL OUTLETS ARE TO BE FLUSH MOUNTED.
2. MOUNTING HEIGHTS ARE FROM THE CENTER LINE OF THE DEVICE.
3. ALL SINGLE GANG AND TWO GANG DEVICES SHALL USE A 4" SQ. BOX WITH EXTENSION RING.
4. ALL MULTI – GANG DEVICES SHALL USE A COMMON COVER PLATE
5. ALL DEVICES (i.e. SWITCHES, RECEPTACLES, ETC.) SHALL BE IVORY AND THEIR COVER PLATES SHALL BE 302 STAINLESS.
6. AFF INDICATES MOUNTING HEIGHT ABOVE FINISHED FLOOR.
7. AFG INDICATES MOUNTING HEIGHT ABOVE FINISHED GRADE.

LIGHTING FIXTURE SCHEDULE

LIGHTING MANUFACTURERS OTHER THAN THOSE LISTED IN THIS SCHEDULE SHALL SUBMIT **PRIOR APPROVAL NO LESS THAN 10 DAYS PRIOR TO BID**. NO FIXTURES WILL BE REVIEWED AFTER THE 10 DAY DEADLINE, NO EXCEPTIONS. SUBSTITUTE PACKAGES MAY BE RESUBMITTED **ONE TIME** FOLLOWING THE INITIAL ENGINEER'S REVIEW. FAILURE TO PROVIDE AN APPROVED EQUIVALENT PACKAGE WILL RESULT IN DISAPPROVAL OF THE ENTIRE SUBSTITUTE PACKAGE. MANUFACTURERS NOT APPROVED PRIOR TO BID SHALL NOT BE SUBMITTED FOR CONSTRUCTION.

MARK	LAMPS			MOUNTING	MANUFACTURER AND CATALOG NUMBER	NOTES
	LUMENS	WATTS	TYPE			
L3A L3AE	2200	33.1	LED 35K	RECESSED GRID	H.E. WILLIAMS LT–22–L39–835–AF–DIM–UNV H.E. WILLIAMS LT–22–L39–835–AF–EM/10W–DIM–UNV	
HF3	2400	27	LED 30K	CEILING MOUNT	HUNTERFAN 51025 MATTE SILVER	
LB2	4500	34.4	LED 35K	WALL SURFACE	H.E. WILLIAMS WMA–2–L40–835–AF–DIM–UNV	
DL8 DL8E	4000	49	LED 35K	SUSPENDED STEM	PEACHTREE LBB–12A–40–DMLV1–DX–35–80–E–NA–PND–LBB–120/277 PEACHTREE LBB–12A–40–DMLV1–DX–35–80–E–NA–PND–LBB–EML1–120/277	
S1 S1E	3800	39	LED 35K	SURFACE MOUNT	FCW3060–UNV4K–CRI85–38L–(FINISH)–LD FCW3060–UNV4K–CRI85–38L–(FINISH)–LD–BBU	
S0	2200	30	LED 35K	SUSPENDED STEM	CAMMAN P3001–18–LH–35K–CLV–MV–WM	
DL4 DL4E	4000	36.5	LED 35K	RECESSED	HE WILLIAMS 6DR L40 9 35 DIM UNV O W OF CS MWT HE WILLIAMS 6DR L40 9 35 DIM UNV O W OF CS MWT EM	
75R 75RE	9600	66	LED 35K	SURFACE MOUNT	HE WILLIAMS 75R–8–L100–835–UNV HE WILLIAMS 75R–8–L100–835–EM/10WLP–UNV	
HB	530	28	LED 35K	WALL 10'0" A.F.G.	GARDCO 121–16L–530–NW–G4–3–UNV–LLC–IMRI2–BZ	
PL1	22000	210	LED 30K	POLE MOUNT 30'0" AFF	HE WILLIAMS VA1–L220–730–T5–F–D180–(BLK)–DIM/NDP 4 50	POLE: HE WILLIAMS AV30–A–160–40–188–T–TM238 –(BLK)–AB

EXISTING LOAD CENTER

NEMA 1, SURFACE MOUNT

200A M.C.B. 240/120V 1ø 3W — 22,000 AIC

CKT NO.	LOAD DESCRIPTION	BREAKER POLE	BREAKER AMP	KVA		BREAKER AMP	BREAKER POLE	LOAD DESCRIPTION	CKT NO.
1	NORTH EAST WALL HEATER	2	60	·	·	60	2	SOUTH WEST WALL HEATER	2
3									4
5	BETWEEN DOORS	1	20	·	·	20	1	LIGHTS	6
7	DOOR OPENERS	1	20	·	·	20	1	TRUCK CHARGERS	8
9	SPACE	1	·	·	·	20	1	WALL OUTLET 1, 3, 4, 6	10
11	SPACE	1	·	·	·	20	1	WALL OUTLET 2, 5, EXIT LIGHTS	12
13	SPACE	1	·	·	·	·	1	SPACE	14
15	SPACE	1	·	·	·	·	1	SPACE	16
17	SPACE	1	·	·	·	·	1	SPACE	18
19	SPACE	1	·	·	·	·	1	SPACE	20
21	SPACE	1	·	·	·	·	1	SPACE	22
23	SPACE	1	·	·	·	·	1	SPACE	24
25	SPACE	1	·	·	·	·	1	SPACE	26
27	SPACE	1	·	·	·	·	1	SPACE	28
29	SPACE	1	·	·	·	·	1	SPACE	30

ESTIMATED MAX LOAD 35.6 KVA

NEW MAIN PANEL P1

NEMA 1, SURFACE MOUNT

400A MLO 208Y/120V 3ø 4W — 22,000 AIC

CKT NO.	LOAD DESCRIPTION	BREAKER POLE	BREAKER AMP	KVA		BREAKER AMP	BREAKER POLE	LOAD DESCRIPTION	CKT NO.
1	LIGHTS SOUTH	1	20	1.0	1.0	20	1	LIGHTS NORTH	2
3	FAC (L)	1	20	0.5	1.4	20	1	ENTRY, DAY ROOM, ELECT	4
5	DISHWASHER (G)	1	20	1.2	1.2	20	1	RIGHT REFRIGERATOR (G)	6
7	CENTER REFRIGERATOR (G)	1	20	1.2	1.2	20	1	LEFT REFRIGERATOR (G)	8
9	OFFICE 101	1	20	0.6	0.8	20	1	EXERCISE 102	10
11	CORRIDORS	1	20	0.6	0.6	20	1	BUNK 6 103	12
13	BUNK 5 104	1	20	0.6	0.6	20	1	BUNK 4 105	14
15	BUNK 3 106	1	20	0.6	0.6	20	1	BUNK 2 107	16
17	BUNK 1 108	1	20	0.6	1.2	20	1	WATER FOUNTAINS (G)	18
19	HVAC, WOMEN, MEN	1	20	0.8	1.0	20	1	WASHER (G)	20
21	WH#1	3	50	13.5	5.0	30	2	DRYER (G)	22
23									24
25					0.1	20	1	DBF#1	26
27	EXTRACTOR (G)	1	20	1.9	0.2	20	1	OUTSIDE LIGHTING	28
29	GEAR STORAGE	1	20	0.4	4.5	25	3	HPU#1	30
31	AHU#1	3	45	11.7					32
33									34
35					6.3	35	3	HPU#2	36
37	AHU#2	3	50	12.5					38
39									40
41					1.2	20	1	TELEPHONE BACKBOARD	42
43	EXISTING LOAD CENTER ***	2	200	34.6	5.0	50	2	OVEN/RANGE	44
45									46
47	KITCHEN COUNTER EQUIPMENT	1	20	1.0	1.0	20	1	KITCHEN COUNTER EQUIPMENT	48
49	SMOKE ALARMS/CO DETECTORS	1	20	0.4	0.2	20	1	SITE LIGHTING	50
51	GENERATOR BATTERY CHARGER	1	20	1.0	0.2	20	1	GENERATOR RECEPTACLE AND LTG	52
53	GENERATOR BLOCK HEATER	1	20	1.0		20	1	SPARE	54

CONNECTED LOAD 116.6 KVA

(G) – PROVIDE GFCI BREAKER
(L) – PROVIDE RED LOCKABLE BREAKER
*** – SUBFEED EXISTING LOAD CENTER THROUGH THIS BREAKER. SEE PANEL RISER DIAGRAM FOR MORE INFO.

Quina Grundhoefer Architects

400 West Romana Street Pensacola, Fl 32502
850-433-5575 qgi@qgarchitects.com

ELECTRICAL SPECIFICATIONS:

1. ALL ELECTRICAL WORK SHALL BE IN CONFORMANCE WITH THE 2014 NATIONAL ELECTRICAL CODE AND LOCAL CODES AND ORDINANCES.
2. ALL WIRING SHALL BE COPPER CONDUCTORS WITH TYPE THHN OR TYPE THW INSULATION RUN IN CONDUIT. PROVIDE INDIVIDUAL NEUTRAL CONDUCTORS FOR ALL SINGLE–POLE BRANCH CIRCUITS. TIED BREAKER HANDLES ARE NOT ACCEPTABLE.
3. ALL MATERIALS SHALL BE NEW AND UL LISTED FOR THE APPLICATION.
4. PROVIDE TYPED PANELBOARD SCHEDULES IN ALL PANELBOARDS.
5. CONDUITS RUN CONCEALED IN THE HOLLOW SPACE OF NON–MASONRY WALLS OR ABOVE SUSPENDED CEILINGS SHALL BE EMT. FLEX SHALL NOT BE PERMITTED. EXPOSED CONDUITS SHALL BE RUN AT RIGHT ANGLES TO OR PARALLEL WITH BUILDING LINES AND EXPOSED STRUCTURE. IN ALL CASES, CONDUIT RUNS SHALL BE GROUPED TOGETHER WHERE POSSIBLE AND SHALL BE SUPPORTED FROM THE BUILDING STRUCTURE, NOT FOR ANY SUSPENDED CEILING SUPPORT SYSTEM.
6. CONDUITS USED FOR CONNECTION TO RECESSED LIGHTING FIXTURES SHALL BE FLEX NOT OVER 6 FEET IN TOTAL LENGTH. CONDUITS FOR CONNECTION TO MOTORS OR VIBRATING EQUIPMENT SHALL BE LQFLEX NOT LESS THAN 18" LONG AND NOT OVER 60" LONG.
7. LIGHTING FIXTURES SHALL BE INSTALLED PLUMB, SQUARE, AND LEVEL WITH THE CEILING, WALL, AND IN ALIGNMENT WITH ADJACENT LIGHTING FIXTURES. MOUNTING HEIGHTS INDICATED SHALL BE TO THE BOTTOM OF THE FIXTURE FOR CEILING–MOUNTED FIXTURES AND TO CENTER OF FIXTURE FOR WALL–MOUNTED FIXTURES. LAY–IN TROFFER FIXTURES SHALL BE SUPPORTED WITH A MINIMUM OF 4 CEILING SUPPORT WIRES PER FIXTURE AND NOT MORE THAN 6 INCHES FROM EACH CORNER OF THE FIXTURE. FOR FIXTURES SMALLER IN SIZE THAN THE CEILING GRID, PROVIDE A MINIMUM OF FOUR WIRES PER FIXTURE. DO NOT SUPPORT FIXTURES BY CEILING ACOUSTICAL PANELS. ALL CONCEALED FIXTURE MOUNTING ACCESSORIES SHALL BE SECURELY TIED TO STRUCTURE. FLEXIBLE CONNECTIONS TO FIXTURES SHALL NOT EXCEED 6 FEET IN LENGTH. FIXTURES SHALL BE SOLIDLY GROUNDED TO RACEWAY SYSTEM.

MECHANICAL EQUIPMENT ELECTRICAL SCHEDULE

MARK	TYPE OF EQUIPMENT	VOLTAGE	FEEDER	DISCONNECT	NOTES
WH#1	WATER HEATER	208/3	3#8, 1#10G, 0.75"C	60A/3P	2
AHU#1	AIR HANDLING UNIT	208/3	3#8, 1#10G, 0.75"C	60A/3P	1
AHU#2	AIR HANDLING UNIT	208/3	3#8, 1#10G, 0.75"C	60A/3P	1
HPU#1	HEAT PUMP UNIT	208/3	3#10, 1#10G, 0.5"C	30A/3P	1
HPU#2	HEAT PUMP UNIT	208/3	3#8, 1#10G, 0.75"C	60A/3P	1

N3R – NEMA 3R

NOTES:
1. COORDINATE WITH THE MECHANICAL CONTRACTOR TO ENSURE ALL DISCONNECTS AND/OR VFD'S ARE PROVIDED AS REQUIRED.
2. FIELD VERIFY SERVING PANEL LOCATION. SEE FLOOR PLAN.

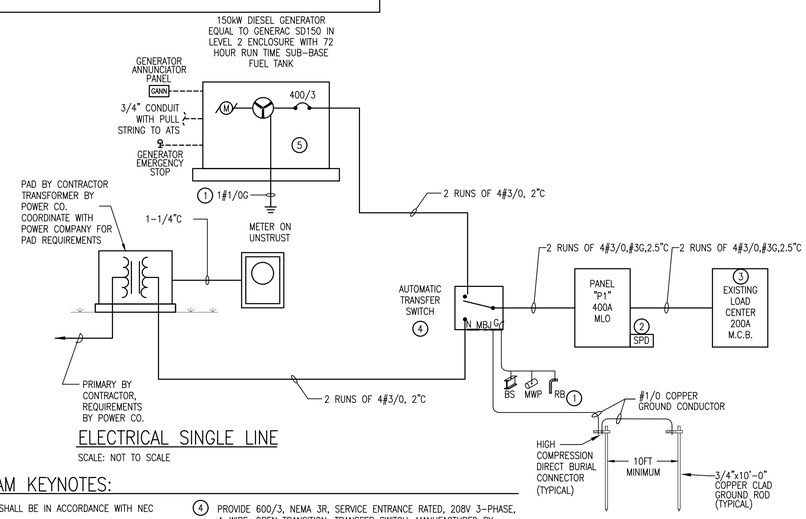

ELECTRICAL SINGLE LINE

SCALE: NOT TO SCALE

SINGLE LINE DIAGRAM KEYNOTES:

1. GROUNDING ELECTRODE SYSTEM SHALL BE IN ACCORDANCE WITH NEC ARTICLE 250.
2. PROVIDE EXTERNAL, SERVICE ENTRANCE RATED, CATEGORY–C SURGE PROTECTION DEVICE, 10–MODE, 240kA PER PHASE.
3. EXISTING SERVICE FEEDER FOR LOAD CENTER TO BE REMOVED. LOAD CENTER SHALL BE FED FROM NEW PANEL MAIN PANEL P1.
4. PROVIDE 600/3, NEMA 3R, SERVICE ENTRANCE RATED, 208V 3–PHASE, 4–WIRE, OPEN TRANSITION, TRANSFER SWITCH. MANUFACTURED BY ASCO OR EQUAL. PROVIDE WITH 400/3 BREAKER.
5. NEW PANEL P1 SCHEDULE FOR REQUIRED GENERATOR CIRCUITS.

ARUN THOMAS VARGHESE
LICENSE
No. 76315
STATE OF FLORIDA
PROFESSIONAL ENGINEER

H.M. YONGE & ASSOCIATES, INC.
CONSULTING ENGINEERS // EST. 1988
51 EAST GREGORY STREET
PENSACOLA, FLORIDA 32502
PHONE: (850)434-2661
CERTIFICATION OF AUTHORIZATION No: 5254
MECHANICAL ENGINEER: HOWARD M. YONGE, P.E. FLORIDA REG No. 32093
MECHANICAL ENGINEER: TIMOTHY J. MITCHELL, P.E. FLORIDA REG No. 66792
ELECTRICAL ENGINEER: ARUN T. VARGHESE, P.E. FLORIDA REG No. 76315

H. M. YONGE AND ASSOC. JOB# 23-158

Project
Addition to Pace Fire Station #4
Pace Fire Rescue District
Pace, Florida

Date: 04/30/24
Project No. 1223
Sheet No. E0.0

TAD= M:\Jobs_Active\23158 Pace Fire Station #4\23158E00.dwg 02/27/24 15:23

Quina Grundhoefer Architects

400 West Romana Street Pensacola, Fl 32502
850-433-5575 qg@qgarchitects.com

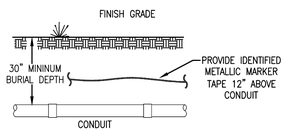

BURIED CONDUIT DETAIL
NOT TO SCALE

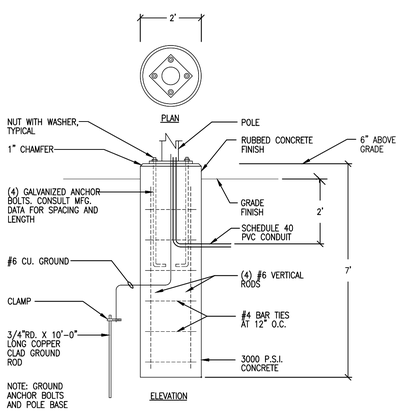

LIGHTING POLE BASE DETAIL
NOT TO SCALE

EXACT POLE BASE REQUIREMENTS SHALL BE CERTIFIED BY A STRUCTURAL ENGINEER PRIOR TO POLE BASE INSTALLATION.

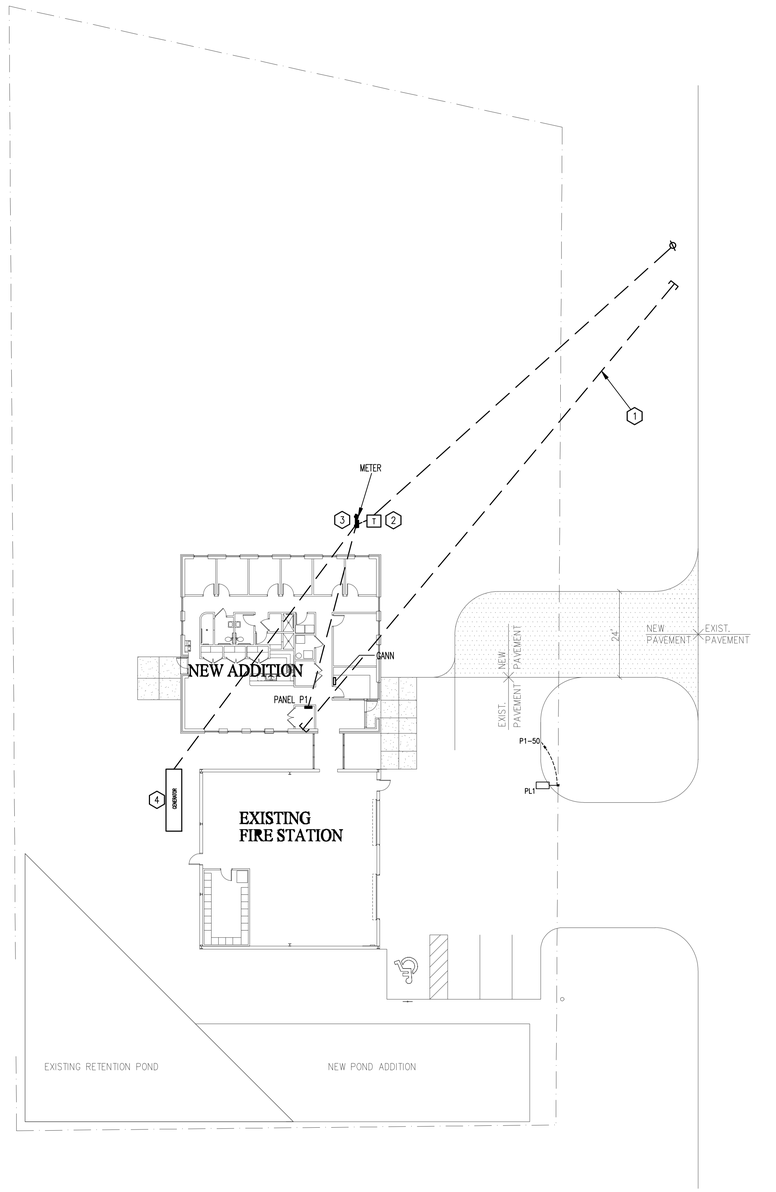

NORTH

SITE PLAN
SCALE: 1" = 20'-0"

SITE PLAN KEYNOTES:

1. PROVIDE ONE 1.5" CONDUIT FOR NEW FIRE ALARM SYSTEM NETWORK CONNECTION. SEE FIRE ALARM SYSTEM RISER DIAGRAM FOR ADDITIONAL REQUIREMENTS. PROVIDE ALL PULL BOXES AS REQUIRED. PENETRATIONS THROUGH FIRE WALLS SHALL BE PROVIDED WITH UL LISTED FIRE STOPPING COMPOUND.
2. NEW PAD-MOUNTED TRANSFORMER LOCATION. SEE RISER DIAGRAM FOR MORE INFORMATION.
3. METER AND SERVICE ENTRANCE AUTOMATIC TRANSFER SWITCH TO BE MOUNTED ON UNISTRUT.
4. NEW DIESEL GENERATOR WITH SUB BASE FUEL TANK. PROVIDE WITH CONCRETE HOUSEKEEPING PAD TO EXTEND 4" ON ALL SIDES.

ARUN THOMAS VARGHESE
LICENSE
No. 76315
STATE OF FLORIDA
PROFESSIONAL ENGINEER

H.M. YONGE & ASSOCIATES, INC.
CONSULTING ENGINEERS // EST. 1988
51 EAST GREGORY STREET
PENSACOLA, FLORIDA 32502
PHONE: (850)434-2661
CERTIFICATION OF AUTHORIZATION No: 5254
MECHANICAL ENGINEER: HOWARD M. YONGE, P.E. FLORIDA REG No. 32093
MECHANICAL ENGINEER: TIMOTHY J. MITCHELL, P.E. FLORIDA REG No. 66792
ELECTRICAL ENGINEER: ARUN T. VARGHESE, P.E. FLORIDA REG No. 76315

H. M. YONGE AND ASSOC. JOB# 23-158

Project
Addition to Pace Fire Station #4
Pace Fire Rescue District
Pace, Florida

Date: 04/30/24
Project No. 1223
Sheet No. E0.1

Quina Grundhoefer Architects

400 West Romana Street Pensacola, Fl 32502
850-433-5575 qg@qgarchitects.com

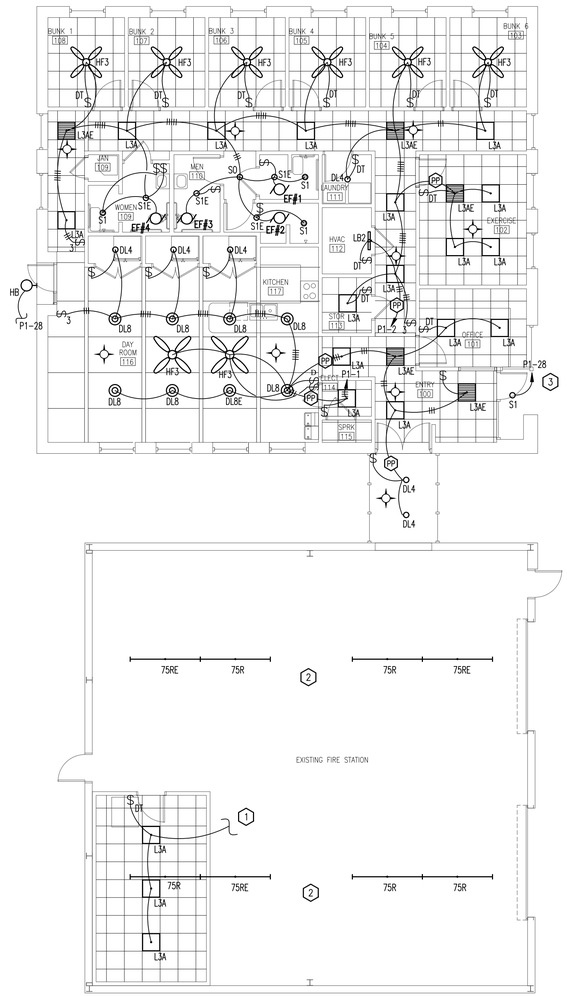

NORTH

LIGHTING FLOOR PLAN

SCALE: 1/8" = 1'-0"

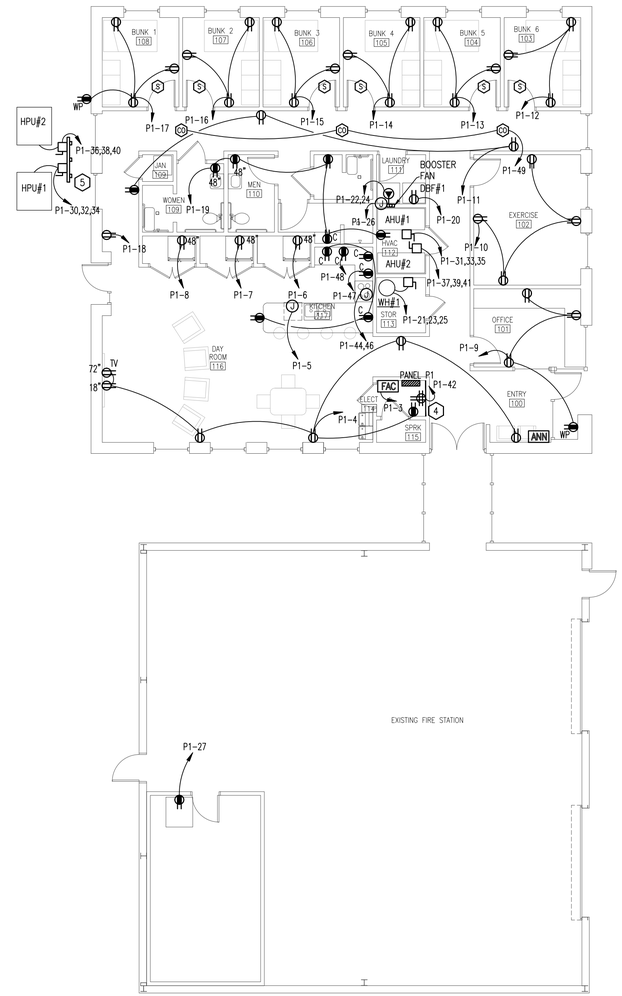

NORTH

POWER FLOOR PLAN

SCALE: 1/8" = 1'-0"

ELECTRICAL KEYNOTES:

1. CONNECT NEW LIGHTING TO EXISTING LIGHTING CIRCUIT IN THIS BUILDING. PROVIDE NEW CONDUIT, WIRE AND JUNCTION BOXES AS REQUIRED.
2. REPLACE FIXTURES IN EXISTING FIRE STATION WITH LED FIXTURES. CONNECT NEW LIGHT FIXTURES TO EXISTING LIGHTING CIRCUITS.
3. ROUTE HOMERUN THROUGH ASTRONOMIC TIME CLOCK IN NEMA 3R ENCLOSURE EQUAL TO INTERMATIC ET90000. LIGHTS SHALL BE PROGRAMMED "ON" AS DUSK. "OFF" TIME PROGRAMMING SHALL BE COORDINATED WITH THE OWNER. INSTALL TIME CLOCK ADJACENT TO SERVING PANELBOARD.
4. PROVIDE 3/4" x4' x 8' PLYWOOD BACKBOARD. PROVIDE 6" CLEARANCE ABOVE FLOOR. ALL POWER AND DATA RECEPTACLES SHALL BE FLUSHED WITH BACKBOARD. PROVIDE #6 GROUND IN 3/4" EMT CONDUIT FROM SERVING ELECTRICAL PANEL TO BACKBOARD. COIL 10' SLACK AT BACKBOARD. PROVIDE GROUND BUS BAR (HARGER GBI SERIES) AS REQUIRED BY COMMUNICATIONS CONTRACTOR.
5. DISCONNECTS TO BE MOUNTED ON UNISTRUT.

ARUN THOMAS VARGHESE
LICENSE
No. 76315
STATE OF FLORIDA
PROFESSIONAL ENGINEER

H.M. YONGE & ASSOCIATES, INC.
CONSULTING ENGINEERS // EST. 1988
51 EAST GREGORY STREET
PENSACOLA, FLORIDA 32502
PHONE: (850)434-2661
CERTIFICATION OF AUTHORIZATION No: 5254
MECHANICAL ENGINEER: HOWARD M. YONGE, P.E. FLORIDA REG No. 32093
MECHANICAL ENGINEER: TIMOTHY J. MITCHELL, P.E. FLORIDA REG No. 66792
ELECTRICAL ENGINEER: ARUN T. VARGHESE, P.E. FLORIDA REG No. 76315

H. M. YONGE AND ASSOC. JOB# 23-158

Project
Addition to Pace Fire Station #4
Pace Fire Rescue District
Pace, Florida

Date: 04/30/24
Project No. 1223
Sheet No. E1.1

TAD> M:\Jobs_Active\23158 Pace Fire Station #4\23158E11.dwg 02/27/24 15:24

Quina Grundhoefer Architects

400 West Romana Street Pensacola, Fl 32502
850-433-5575 qg@qgarchitects.com

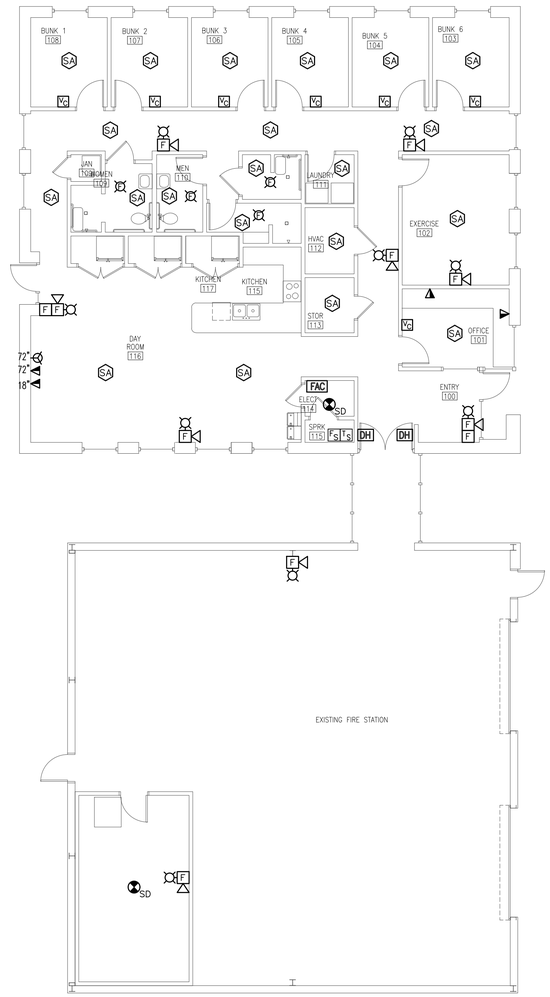

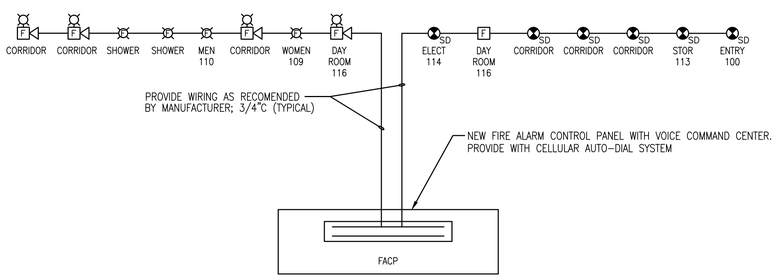

FIRE ALARM SYSTEM RISER DIAGRAM

NOT SO SCALE

NORTH

SYSTEMS FLOOR PLAN

SCALE: 1/8" = 1'-0"

ARUN THOMAS VARGHESE
LICENSE
No. 76315
STATE OF FLORIDA
PROFESSIONAL ENGINEER

H.M. YONGE & ASSOCIATES, INC.
CONSULTING ENGINEERS // EST. 1988
51 EAST GREGORY STREET
PENSACOLA, FLORIDA 32502
PHONE: (850)434-2661
CERTIFICATION OF AUTHORIZATION No: 5254
MECHANICAL ENGINEER: HOWARD H. YONGE, P.E. FLORIDA REG No. 32093
MECHANICAL ENGINEER: TIMOTHY J. MITCHELL, P.E. FLORIDA REG No. 66792
ELECTRICAL ENGINEER: ARUN T. VARGHESE, P.E. FLORIDA REG No. 76315

H. M. YONGE AND ASSOC. JOB# 23-158

Project
Addition to Pace Fire Station #4
Pace Fire Rescue District
Pace, Florida

Date: 04/30/24
Project No. 1223
Sheet No. E1.2