SENIOR CENTER - CITY OF PAXTON

WALTON COUNTY, FL

PROJECT TEAM

OWNER	GENERAL CONTRACTOR	ARCHITECTS	STRUCTURAL ENGINEER	MECHANICAL - ELECTRICAL - PLUMBING
	TBD	FOREFRONT	FOREFRONT	Cabral Engineering Inc

ABBREVIATIONS

ADD'L.	ADDITIONAL	M.	MATERIAL
A.F.F.	ABOVE FINISH FLOOR	MAX.	MAXIMUM
A.F.G.	ABOVE FINISH GRADE	MECH.	MECHANICAL
A.C.T.	ACOUSTICAL CEILING TILE	MTL.	METAL
ALT.	ALTERNATE	MEZZ.	MEZZANINE
ALUM.	ALUMINUM	MIN.	MINIMUM
ANCH.	ANCHOR	MISC.	MISCELLANEOUS
APPROX.	APPROXIMATE	MLDG.	MOULDING
ARCH.	ARCHITECT	M.R.	MOISTURE RESISTANT MOUNTING
BRG.	BEARING	MULL.	MULLION
BM.	BEAM	NOM.	NOMINAL
BTWN.	BETWEEN	N.	NORTH
BLK.	BLOCK	N.I.C.	NOT IN CONTRACT
BD.	BOARD	N.T.S.	NOT TO SCALE
BTM.	BOTTOM	NO.	NUMBER
BLDG.	BUILDING	O.C.	ON CENTER
B.U.R.	BUILT UP ROOF	OH.	OVERHEAD
CLG.	CEILING	OPG.	OPENING
C.M.U.	CONC. MASONRY UNIT	OPP.	OPPOSITE
C.T.	CERAMIC TILE	O.D.	OUTSIDE DIAMETER
C.O.	CLEANOUT	P.T.	PRESSURE TREATED
COL.	COLUMN	PTD.	PAINTED
CONC.	CONCRETE	PNL.	PANEL OR PANELING PARTITION
CONST.	CONSTRUCTION	PART.	PARTITION
C.J.	CONTROL JOINT	P.H.	PHYSICALLY HANDICAPPED
CONT.	CONTINUOUS	PLAS.	PLASTER
DET.	DETAIL	P.LAM.	PLASTIC LAMINATE
DIA.	DIAMETER	PLBG.	PLUMBING
DIM.	DIMENSION	PLYWD.	PLYWOOD
DR.	DOOR	PROP.	PROPERTY
DN.	DOWN	Q.T.	QUARRY TILE
DS.	DOWNSPOUT	R	RADIUS
DWG.	DRAWING	REF.	REFERENCE
D.W.	DRYWALL	REINF.	REINFORCED, REINFORCING
D.F.	DRINKING FOUNTAIN	REQD.	REQUIRED
EA.	EACH	REV.	REVERSE
E.W.C.	ELECTRIC WATER COOLER	R.H.	RIGHT HAND
ELEV.	ELEVATION	RM.	ROOM
EQ.	EQUAL	R.O.	ROUGH OPENING
EQUIP.	EQUIPMENT	R.T.U.	ROOF TOP UNIT
ETC.	ET CETERA	S.F	SQUARE FEET, FOOTAGE
EXH.	EXHAUST	SCHED.	SCHEDULE
EXIST.	EXISTING	SLT.	SEALANT
E.J.	EXPANSION JOINT	SEC.	SECTION
EXT.	EXTERIOR	SIM.	SIMILAR
F.R.P.	FIBERGLASS REINF PANEL	SL.	SLOPE
FIN.	FINISH	SPEC.	SPECIFICATION
F.E.	FIRE EXTINGUISHER	SQ.	SQUARE
FLUOR.	FLUORESCENT	S.S.	STAINLESS STEEL
F.D.	FLOOR DRAIN	STD.	STANDARD
FLR.	FLOOR	STL.	STEEL
FT.	FOOT, FEET	STRUCT.	STRUCTURAL
FTG.	FOOTING	SUSP.	SUSPENDED
F.V.	FIELD VERIFY	SW.	SWITCH
GALV.	GALVANIZED	SYS.	SYSTEM
GA.	GAUGE	TEL.	TELEPHONE
G.C. GR.	GENERAL CONTRACTOR	TEMP.	TEMPERED
GYP.	GYPSUM	THRES.	THRESHOLD
HDW.	HARDWARE	T.P.D.	TOILET PAPER DISPENSER
HGT.	HEIGHT	T.&G.	TONGUE AND GROOVE
H.M.	HOLLOW METAL	T.&B.	TOP AND BOTTOM
H.P.	HIGH POINT	T.O.F.	TOP OF FOOTING
HORIZ.	HORIZONTAL	T.O.M.	TOP OF MASONRY
INCAN.	INCANDESCENT	T.O.S.	TOP OF STEEL
I.D.	INSIDE DIAMETER	T.	TREAD
INSUL.	INSULATION	TYP.	TYPICAL
INT.	INTERIOR	UNFIN.	UNFINISHED
JT.	JOINT	U.O.N.	UNLESS OTHERWISE NOTED
K.O.	KNOCK OUT	VERT.	VERTICAL
LAM.	LAMINATED	VEST.	VESTIBULE
LAV.	LAVATORY	V.C.T.	VINYL COMPOSITION TILE
LB.	POUND	W.C.	WATER CLOSET
L.H.	LEFT HAND	W.H.	WATER HEATER
L.P.	LOW POINT	W.P.	WORK POINT
MFR.	MANUFACTURER	WP.	WATERPROOF
MAS.	MASONRY	W.R.	WATER RESISTANT
M.O.	MASONRY OPENING	W.W.M.	WELDED WIRE MESH
		W/	WITH
		W/O	WITHOUT
		WD.	WOOD

PROJECT NARRATIVE & SCOPE

GENERAL CONSTRUCTION SCOPE:
- NEW CONSTRUCTION ONE STORY BUILDING. CONCRETE MONOLITHIC SLAB, CMU EXTERIOR WALLS, STEEL STRUCTURE, AND SIP ROOF PANELS

SCOPE OF WORK DISCLAIMER

ALL CONSTRUCTION, REPAIRS, AND ALTERATIONS TO EXISTING BUILDINGS MUST BE ACCOMPLISHED IN A SAFE AND PROFESSIONAL MANNER TO SAFEGUARD ANY OCCUPANTS IN THE BUILDING. CHAPTER 15 "CONSTRUCTION SAFEGUARDS" IN THE 2020 FLORIDA BUILDING CODE BUILDING, 7TH ADDITION MUST STRICTLY BE FOLLOWED.

ALL SYSTEMS, MUST REMAIN OPERABLE AND SAFE DURING CONSTRUCTION.

☒ THE FOLLOWING BUILDING COMPONENTS AND DISCIPLINES ARE **NOT INCLUDED** IN THE SCOPE OF THE REMODEL WORK. NO WORK IS TO BE PERFORMED ON ANY OF THESE SYSTEMS WITHOUT A PERMIT FOR THE REQUIRED WORK.

☐ ARCHITECTURE ☐ MECHANICAL ☐ PLUMBING ☒ FIRE SPRINKLER SYSTEM
☐ STRUCTURE ☐ ELECTRICAL ☒ FIRE ALARM SYSTEM

BUILDING CODE ANALYSIS

CODES IN EFFECT:
-FLORIDA BUILDING CODE, BUILDING, 8TH EDITION (2023)
-FLORIDA BUILDING CODE, ACCESSIBILITY, 8TH EDITION (2023)
-NATIONAL ELECTRIC CODE 2020, EDITION NFPA 70
-FLORIDA FIRE PREVENTION CODE, 8TH EDITION:
BASED ON NFPA 1 FIRE CODE 2021 EDITION
NFPA 101 LIFE SAFETY CODE 2021 EDITION
-FLORIDA BUILDING CODE, ENERGY CONSERVATION, 8TH EDITION (2023)

PROJECT: AGING FACILITY. WALTON COUNTY, FL.

ADDRESS: 22174 US-331. Paxton, FL 32567

SCOPE OF PROJECT: NEW CONSTRUCTION

ARCHITECT CONTACT: LENNARD DAVIS, FOREFRONT ARCHITECTURE AND ENGINEERING

THE INFORMATION CONTAINED BELOW REFERS TO THE OVERALL, EXISTING BUILDING, AND IS FOR INFORMATIVE PURPOSES, ONLY AS IT IS KNOWN AND AS PRESENTED TO THE ARCHITECT BY THE OWNER.

BUILDING DATA:

BUILDING OCCUPANCY TYPE: ASSEMBLY - A3 - COMMUNITY HALL

BUILDING CONSTRUCTION TYPE: TYPE V-B, UNPROTECTED

RISK CATEGORY: II

NUMBER OF STORIES: 1

BUILDING HEIGHT: NOT TO EXCEED 35'-0"

CODE ANALYSIS

CODE ITEM	FBC	SECT.	NFPA	SECT.	PROV.
OCCUPANCY					
ASSEMBLY	GROUP A3	303.4	NEW ASSEMBLY	CHAPTER 12	
CONSTRUCTION TYPE	TYPE V-B	602.2	II (000)		
FLOOR & FLOOR CLG ASS.	0 HR	TABLE 601	0 HR	TABLE 6.1.14.4.1(B)	0 HR
ROOF & ROOF CLG ASS.	0 HR	TABLE 601	0 HR	TABLE 6.1.14.4.1(B)	0 HR
EXT. BEARING WALLS >30'	0 HR	TABLE 601	0 HR	TABLE 6.1.14.4.1(B)	0 HR
EXT. NON-BEAR. WALLS >30'	0 HR	TABLE 601	0 HR	TABLE 6.1.14.4.1(B)	0 HR
INTERIOR BEARING WALLS	0 HR	TABLE 721.1 (2)	0 HR		0 HR
ILLUMINATION	> 1 FOOTCANDLE (11 LUX)	1008.1		7.8.1.3 (2)	1 FOOTCANDLE PROVIDED
MINIMUM CLEAR OPENING OF EXIT	32"	TABLE 1010.1.1	32"	7.2.1.2.1	34"
NUMBER OF EXITS EXIT SEPARATION	2 >1/3 DIAG DIM	1006.2.1 1007.1.1	2 >1/3 DIAG DIM	7.4.1.1 7.5.1.3.3	3 CALCULATED
ILLUMINATION	1 FOOTCANDLE (11 LUX)	1008.1		7.8.1.3 (2)	1 FOOTCANDLE PROVIDED
GUARDRAILS	42" ABOVE FLOOR	1015.3	42" ABOVE FLOOR	7.2.2.4.6.2	42" ABOVE FLOOR
GUARDRAILS OPENINGS	<4" SPHERE TO 34" FROM FLOOR	1015.4	<4" SPHERE TO 34" FROM FLOOR	7.2.2.4.6.3	<4" SPHERE TO 34" FROM FLOOR
GUARDRAIL OPENING-STAIRS	>6" AT TREAD/ RISER RAIL	1015.4 EXC 2	>6" AT TREAD/ RISER RAIL	7.2.2.4.6.3(1)	>6" AT TREAD/ RISER RAIL

OCCUPANT LOAD

NAME	FUNCTION OF SPACE OCCUPANCY CATEGORY		SF	OCCUPANT LOAD FACTOR	INDIVIDUAL OCCUPANT LOAD
ASSEMBLY - COMMUNITY HALL		DINING AREA/TABLE AND CHAIRS	1,847	15 NET	123
ACCESSORY - FBC 303.1.2		OFFICES, SITTING AREA	1,028	150 GROSS	7
		SERVING AREA	227	150 GROSS	2
		MECHANICAL CLOSETS & STORAGE AREAS	187	300 GROSS	1
		RESTROOMS	196	150 GROSS	2
TOTAL OCCUPANT LOAD					135

ARCHITECTURAL SYMBOLS

BUILDING SECTION
SECTION INDICATOR (#)
SHEET NUMBER (###)

DETAIL REFERENCE
DETAIL NUMBER
SHEET NUMBER

KEYNOTE REFERENCE
REFERENCE NUMBER (##)

COLUMN REFERENCE (X)

REVISION REFERENCE
REVISION NUMBER (#)
REFER TO TITLE SHEET

LOCATION MAP

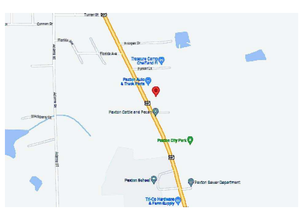

AREA COMPUTATION

NAME	AREA	SPACE
FIRST FLOOR	3515	CONDITIONED
	3515	
	3515	

N

REVISION TABLE

REV NO.	DATE	REV DESCRIPTION

SQUARE FOOTAGE CALCULATIONS

PROPOSED FLOOR SQFT	3515 SF

PLUMBING FIXTURE COUNT

FBC TABLE 2902.1
135 TOTAL OCCUPANT/2 = 68 M/F

	URINAL/ WATER CLOSETS (1 PER 40)		LAVATORIES (1 PER 75)		DRINKING FOUNTAINS (1 PER 500)	SERVICE SINKS
MALE	1.7 REQUIRED	3 PROVIDED	0.91 REQUIRED	3 PROVIDED	1	1
FEMALE	1.7 REQUIRED	3 PROVIDED	0.91 REQUIRED	3 PROVIDED		

SHEET LIST TABLE

SHEET #	SHEET TITLE	REV #	REV DATE
CS-001	COVER SHEET	0	00/00/00
GN-001	GENERAL NOTES	0	00/00/00
A001	LIFE SAFETY PLAN WITH FURNITURE - FIRST FLOOR PLAN	0	00/00/00
A002	LIFE SAFETY PLAN - FIRST FLOOR PLAN	0	00/00/00
A003	OCCUPANCY CALC.- FIRST FLOOR PLAN	0	00/00/00
A101	FIRST FLOOR PLAN	0	00/00/00
A102	RAISED FLOOR PLAN	0	00/00/00
A103	ROOF PLAN	0	00/00/00
A104	ENLARGED PLAN AND INT. ELEVATIONS - RESTROOMS	0	00/00/00
A105	ENLARGED PLAN AND INT. ELEV. - RESTROOM AND RECEPT. AREA	0	00/00/00
A106	ENLARGED PLAN AND INT. ELEVATIONS - SERVING AREA	0	00/00/00
A107	ENLARGED PLAN AND INT. ELEVATIONS- BOOKSHELVES	0	00/00/00
A108	DUMPSTER ENCLOSURE	0	00/00/00
A200	ELEVATIONS	0	00/00/00
A201	ELEVATIONS	0	00/00/00
A300	BUILDING SECTIONS	0	00/00/00
A301	BUILDING SECTIONS	0	00/00/00
A401	WALL SECTIONS	0	00/00/00
A402	WALL SECTIONS	0	00/00/00
A501	REFLECTED CEILING PLAN - FIRST FLOOR PLAN	0	00/00/00
A502	REFLECTED CEILING PLAN - RAISED FLOOR	0	00/00/00
A600	ADA SIGNAGE AND DETAILS	0	00/00/00
A601	ADA DETAILS	0	00/00/00
A602	ARCHITECTURAL DETAILS	0	00/00/00
A603	ARCHITECTURAL DETAILS	0	00/00/00
A604	ARCHITECTURAL DETAILS	0	00/00/00
A701	DOOR AND WINDOW SCHEDULES AND ELEVATIONS	0	00/00/00
A801	FINISHES FLOOR PLAN	0	00/00/00
E001	ELECTRICAL SPECIFICATIONS	0	00/00/00
E101	SITE ELECTRICAL PLANS	0	00/00/00
E201	POWER AND SYSTEMS PLAN	0	00/00/00
E301	LIGHTING PLANS	0	00/00/00
E701	ELECTRICAL DIAGRAMS AND SCHEDULES	0	00/00/00
E901	ELECTRICAL DETAILS	0	00/00/00
E902	ELECTRICAL DETAILS	0	00/00/00
E903	ELECTRICAL DETAILS	0	00/00/00
M100	MECHANICAL LEGENDS, ABBREVIATION AND INDEX.	0	00/00/00
M101	MECHANICAL SPECIFICATIONS	0	00/00/00
M200	MECHANICAL FLOOR PLAN- DUCTWORK	0	00/00/00
M201	MECHANICAL FLOOR PLAN- PIPING	0	00/00/00
M300	MECHANICAL EQUIPMENT SCHEDULE	0	00/00/00
M400	MECHANICAL DETAIL	0	00/00/00
P100	PLUMBING LEGENDS, ABBREVIATIONS AND INDEX	0	00/00/00
P101	PLUMBING SPECIFICATIONS	0	00/00/00
P200	PLUMBING FLOOR PLAN - SANITARY WATER	0	00/00/00
P201	PLUMBING ROOF PLAN	0	00/00/00
P300	PLUMBING RISER DIAGRAM - SANITARY WATER	0	00/00/00
P400	PLUMBING FIXTURE SCHEDULE	0	00/00/00
P500	PLUMBING DETAILS	0	00/00/00
S001	STRUCTURAL GENERAL NOTES	0	00/00/00
S002	C&C WIND PRESSURES	0	00/00/00
S003	C&C WIND PRESSURES	0	00/00/00
S101	FOUNDATION PLAN	0	00/00/00
S200	INTERMEDIATE LEVEL FRAMING PLAN	0	00/00/00
S201	ROOF FRAMING PLAN	0	00/00/00
SD100	STRUCTURAL DETAILS	0	00/00/00
SD101	STRUCTURAL DETAILS	0	00/00/00

ARCHITECTURE + ENGINEERING
License No. 102538
License No. 26002939
1230 Oakley Seaver Drive, Suite 200 - Clermont, FL 34711
P: 888-850-FFAE (3323)
www.forefrontae.com
FOREFRONT
Service Beyond Design

REVISION
0 00/00/00

SENIOR CENTER
22174 US HIGHWAY 331 N PAXTON FL 32567
COVER SHEET

ANY DISCREPANCY OR ERROR IN DIMENSIONS OR NOTES SHALL BE BROUGHT TO THE ATTENTION OF THE DESIGN PROFESSIONAL FOR CLARIFICATION PRIOR TO COMMENCEMENT OF CONSTRUCTION.

JOB #: 21-17367
DATE: 05/24/24

CS-001

© FOREFRONT ARCHITECTURE & ENGINEERING LLC 2014 THIS DOCUMENT AND/OR THE DESIGN CONCEPTS EXPRESSED HEREIN ARE THE PROPERTY OF FOREFRONT ARCHITECTURE & ENGINEERING LLC AND ALL RIGHTS OF OWNERSHIP, INCLUDING COPYRIGHT OF INTELLECTUAL PROPERTY, ARE RESERVED. ANY REPRODUCTIONS, COPYING, OR USE OF THIS DOCUMENT AND/OR THE DESIGN CONCEPT WITHOUT THE WRITTEN CONSENT OF FOREFRONT ARCHITECTURE & ENGINEERING LLC IS STRICTLY PROHIBITED AND PROTECTED BY UNITED STATES AND INTERNATIONAL LAW. IF PRINTED ON 11X17 SCALE IS HALF THE SIZE NOTED.

GENERAL NOTES

1. THESE DOCUMENTS HAVE BEEN PREPARED EXPRESSLY FOR USE BY FOR THE PURPOSE OF BUILDING.
2. ANY ADDITIONAL USE OF THESE DOCUMENTS FOR ANY REASON OTHER THAN THAT MENTIONED ABOVE MUST BE AUTHORIZED IN WRITING BY THE COPYRIGHT HOLDER.
3. THESE DRAWINGS REFLECT DESIGN INTENT.
4. THESE DRAWINGS, AS LISTED IN THE DRAWING INDEX, ALONG WITH THE SPECIFICATIONS & CONTRACT FOR CONSTRUCTION, CONSTITUTE THE INSTRUMENTS OF SERVICE AND ARE CONSIDERED A SINGLE ENTITY. THE CONTRACTOR IS THEREFORE BOUND BY ALL INFORMATION INCLUDED.
5. ONLY DRAWINGS MARKED 'ISSUED FOR CONSTRUCTION' SHALL BE USED AS A BASIS FOR CONSTRUCTION.
6. THE TERM 'CONTRACTOR' IN THE PLANS SHALL REFER TO THE GENERAL CONTRACTOR. IT SHALL BE THE RESPONSIBILITY OF THE GENERAL CONTRACTOR TO COORDINATE THE SUBCONTRACTOR WORK WITH THESE PROJECT DOCUMENTS. CONTRACTOR SHALL PROVIDE A LIST OF ALL SUB-CONTRACTORS TO THE CONSTRUCTION PROJECT MANAGER.
7. CONTACT CONSTRUCTION PROJECT MANAGER FOR COORDINATION OF STAGING AND REFUSE REMOVAL PRIOR TO SIGNING THE CONTRACT FOR CONSTRUCTION. ANY ADJUSTMENT IN THE CONTRACT AMOUNT OR DURATION DUE TO REQUIREMENTS SHALL BE MADE PRIOR TO CONTRACT EXECUTION.
8. ALL ITEMS SHOWN ARE NEW TO BE PROVIDED & INSTALLED BY G.C. UNLESS NOTED OTHERWISE.
9. DO NOT SCALE DRAWINGS - WRITTEN DIMENSIONS TAKE PRECEDENT. LARGE SCALE DRAWINGS TAKE PRECEDENCE OVER SMALL SCALE DRAWINGS. DETAILS TAKE PRECEDENCE OVER ALL.
10. THE CONTRACTOR SHALL FIELD VERIFY ALL EXISTING DIMENSIONS AND CONDITIONS PRIOR TO BID AND CONSTRUCTION. CONTRACTOR SHALL NOTIFY THE CONSTRUCTION PROJECT MANAGER AND THE ARCHITECT IMMEDIATELY OF ANY DISCREPANCIES OR OMISSIONS PRIOR TO PROCEEDING WITH ANY WORK.
11. FOR BIDDING PURPOSES: WHERE CONFLICTS EXIST BETWEEN DRAWING DETAILS & SPECIFICATIONS, THE MORE STRINGENT SPECIFICATION SHALL APPLY.
12. PRIOR TO SUBMITTING A PROPOSAL, ALL CONTRACTORS SHALL VISIT THE SITE TO FAMILIARIZE THEMSELVES WITH EXISTING CONDITIONS AND THE NATURE AND SCOPE OF THE WORK. THE SUBMISSION OF A PROPOSAL SHALL BE CONSTRUED AS EVIDENCE THAT SUCH A SITE VISIT HAS BEEN MADE, AND LATE CLAIMS FOR LABOR, EQUIPMENT OR MATERIALS REQUIRED FOR DIFFICULTIES ENCOUNTERED, WHICH COULD HAVE BEEN FORESEEN HAD SUCH AN EXAMINATION BEEN MADE, WILL NOT BE RECOGNIZED.
13. THE GENERAL CONTRACTOR / SUB-CONTRACTOR SHALL OBTAIN AND PAY FOR ALL THE LEGALLY REQUIRED APPROVAL AND PERMITS NECESSARY FOR THE EXECUTION AND COMPLETION OF THE FORWARD COPIES TO THE TENANT CONSTRUCTION PROJECT MANAGER .
14. ALL WORK PERFORMED BY THE CONTRACTOR / SUB-CONTRACTOR SHALL CONFORM TO THE REQUIREMENTS OF THE MUNICIPAL, LOCAL, AND STATE AND FEDERAL LAWS, AS WELL AS ANY OTHER GOVERNING REQUIREMENTS, INCLUDING LANDLORD REQUIREMENTS, WHETHER OR NOT SPECIFIED ON THE DRAWINGS.
15. WHERE THE CONTRACT NOTES OR DRAWINGS CALL FOR ANY WORK OR A MORE STRINGENT NATURE THAN THAT REQUIRED BY THE BUILDING CODE OR ANY OTHER DEPARTMENT HAVING JURISDICTION OVER THE WORK, THE WORK OF THE MORE STRINGENT NATURE CALLED FOR BY THE CONTRACT NOTES OR DRAWINGS SHALL BE FURNISHED IN ALL CASES.
16. ALL CONTRACTORS SHALL CONTACT THE BUILDING MANAGEMENT/LANDLORD TO DETERMINE THE RULES OF THE BUILDING OWNER FOR CONSTRUCTION AND DELIVERY OF EQUIPMENT AND MATERIALS.
17. PRIOR TO BEGINNING ANY WORK, THE GENERAL CONTRACTOR SHALL FURNISH THE CONSTRUCTION PROJECT MANAGER WITH A CONSTRUCTION SCHEDULE SHOWING THE CHRONOLOGICAL PHASES OF HIS WORK AND ALL RELATED WORK FOR THE COMPLETION OF THE PROJECT. THIS SCHEDULE SHALL INDICATE ALL ORDERING LEAD TIMES, LENGTH OF TIME FOR EACH PHASE AND THE PROJECTED START AND COMPLETE DATES.
18. IT IS ASSUMED THAT THE G.C. SHALL PERFORM THE WORK AS ILLUSTRATED WITHIN THE PERMITTED DRAWINGS. THE CONTRACTOR SHALL NOTIFY THE ARCHITECT IN THE EVENT THAT EXISTING SITE CONDITIONS PREVENT THE WORK FROM BEING COMPLETED AS ILLUSTRATED HEREIN SO THAT ANY MODIFICATIONS TO THE CONSTRUCTION DOCUMENTS (IF NECESSARY) CAN BE MADE. ANY DEVIATIONS FROM THE PERMITTED DRAWINGS WILL NOT BE ACCEPTABLE, AND THE CONTRACTOR SHALL RECONFIGURE THE WORK AT HIS OWN EXPENSE, AS REQUIRED TO BE IN CONFORMANCE WITH THE PERMITTED DOCUMENTS. THE ARCHITECT WILL NOT ACCEPT, CERTIFY, OR DOCUMENT ANY WORK THAT DOES NOT CONFORM TO THE PERMITTED DOCUMENTS FOR THE PURPOSES OF OBTAINING ANY ADDITIONAL MUNICIPAL APPROVAL REQUIRED DUE TO UNAUTHORIZED REVISIONS.
19. THE GENERAL CONTRACTOR SHALL MAINTAIN A CURRENT AND COMPLETE SET OF CONSTRUCTION DRAWINGS ON SITE THROUGHOUT THE DURATION OF CONSTRUCTION FOR USE BY ALL TRADES.
20. ALL DEBRIS SHALL BE REMOVED FROM THE PREMISES, AND WORK AREAS SHALL BE LEFT IN A CLEAN CONDITION ON A DAILY BASIS.
21. THE GENERAL CONTRACTOR SHALL EXERCISE STRICT DUST CONTAINMENT CONTROL OVER THE JOB SITE TO PREVENT DUST FROM ESCAPING.
22. THE GENERAL CONTRACTOR SHALL PROPERLY PROTECT THE GENERAL BUILDING AREAS AND ANY ADJOINING PROPERTY OR WORK FROM DAMAGE DURING CONSTRUCTION, AND SHALL PATCH OR REPLACE ANY DAMAGED WORK OR MATERIALS WITHOUT DELAY.
23. ANY DAMAGE BY G.C. OR SUBCONTRACTOR TO EXISTING ASPHALT PAVEMENT AND/OR EXISTING LANDSCAPING OUTSIDE OF CONSTRUCTION LIMIT LINE SHALL BE REPAIRED AT NO COST TO OWNER OR TENANT.
24. DURING THE ENTIRE PERIOD OF DEMOLITION AND CONSTRUCTION. ALL REQUIRED EXITS AND EGRESS PATHWAYS SHALL BE CONTINUOUSLY MAINTAINED FREE FROM ALL OBSTRUCTIONS AND IMPEDIMENTS IN THE CASE OF A FIRE OR OTHER EMERGENCY. ALL EXISTING EXIT LIGHTING, FIRE PROTECTIVE DEVICES AND ALARMS SHALL BE CONTINUOUSLY MAINTAINED.
25. NO MATERIALS SHALL BE STORED ON PUBLIC PROPERTY UNLESS AN ENCROACHMENT PERMIT IS FIRST OBTAINED FROM THE PUBLIC WORKS DEPT.
26. EACH TRADE SHALL PROVIDE CAULKING OR SEALANT WHERE REQUIRED.
27. PROVIDE STRUCTURAL SUPPORTS AS REQUIRED AT ALL WALL MOUNTED EQUIPMENT, CABINETS, PLUMBING AND LIGHT FIXTURES.
28. MANUFACTURER'S NAME, TRADEMARK, LOGOS, ETC., SHALL NOT BE VISIBLE TO THE PUBLIC.
29. ALL FLOOR SLAB CUTTING, TRENCHING AND REMOVAL SHALL BE REPLACED WITH THE SAME MATERIAL IN THE SAME THICKNESS OF THE ADJACENT FLOOR MATERIAL. ADDITIONAL CONCRETE PATCHING SHALL BE DOWELED INTO THE ADJACENT CONCRETE SLAB TO MINIMIZE DIFFERENTIAL SETTLEMENT OF THE FLOOR SYSTEM.
30. ALL ROOF PENETRATIONS ARE TO BE PERFORMED BY PROJECT/CONSTRUCTION MANAGER'S ROOFING CONTRACTOR. CONTACT PROJECT/CONSTRUCTION MANAGER TO COORDINATE.

FIRE & SAFETY NOTES

CORRIDORS AND OPENINGS
1. DOORS OPENING INTO A ONE-HOUR FIRE RESISTIVE CORRIDOR SHALL BE PROTECTED WITH A SMOKE OR DRAFT-STOP FIRE ASSEMBLY HAVING A MINIMUM 20 MINUTE RATING AND SELF-CLOSING DEVICE.
2. SMOKE/FIRE DAMPERS OR DOORS SHALL BE PROVIDED WHERE DUCTS PENETRATE FIRE RATED WALLS OR CEILINGS.
INTERIOR FINISHES - SEE FBC TABLE 803.11
1. INTERIOR WALL AND CEILING FINISHES SHALL NOT EXCEED A FLAME SPREAD CLASSIFICATION OF 200 (CLASS III).
2. INTERIOR WALL AND CEILING FINISHES FOR EXIT CORRIDORS SHALL NOT EXCEED A FLAME SPREAD CLASSIFICATION OF BETWEEN 26 AND 75 (CLASS II).
3. INTERIOR WALL AND CEILING FINISHES FOR 2 HOUR EXIT CORRIDORS SHALL NOT EXCEED A FLAME SPREAD CLASSIFICATION OF BETWEEN 0 AND 25 (CLASS I).
4. CEILING TILES TO BE MINERAL FIBER WITH UL LABEL AND FLAME SPREAD RATING OF 25 OR LESS.
EXITS
1. EVERY EXIT DOOR SHALL BE OPENABLE FROM THE INSIDE WITHOUT THE USE OF A KEY, TOOL OR SPECIAL KNOWLEDGE OR EFFORT. SPECIAL LOCKING DEVICES SHALL BE AN APPROVED TYPE.
2. PANIC HARDWARE SHALL BE PROVIDED IN EXIT DOORS SERVING ROOMS, CORRIDORS OR STAIRWAYS HANDLING AN OCCUPANCY OF 50 OR MORE PERSONS.
3. AISLES LEADING TO REQUIRED EXITS SHALL HAVE A MINIMUM WIDTH OF 44" CLEAR.
FIRE ALARM
1. EXTEND OR MODIFY EXISTING FIRE/LIFE SAFETY SYSTEM AS REQUIRED BY CODE.
2. SUBMIT COMPLETE SETS OF PLANS TO THE ELECTRICAL DIVISION OF THE LOCAL DEPARTMENT OF BUILDING AND SAFETY AND TO THE FIRE DEPARTMENT. VERIFY WITH LOCAL JURISDICTION FOR NUMBER OF SETS REQUIRED.
SIGNS AND EMERGENCY LIGHTING
1. PROVIDE EXIT SIGNS AND DIRECTIONAL EXIT SIGNS WITH A MINIMUM 6" HIGH BY 3/4" STROKE BLOCK LETTERS ON A CONTRASTING BACKGROUND.
2. WHENEVER BUILDING IS OCCUPIED, EXIT SIGNS SHALL BE LIGHTED SO THAT THEY ARE CLEARLY VISIBLE.
3. EXIT SIGNS SHALL BE ELECTRICALLY ILLUMINATED. LED LAMPS SHALL BE ENERGIZED FROM SEPARATE CIRCUITS. ILLUMINATION SHALL NORMALLY BE PROVIDED BY THE PREMISE'S WIRING IN THE EVENT OF FAILURE OF THIS SYSTEM, ILLUMINATION SHALL BE AUTOMATICALLY PROVIDED FROM BATTERY BACK-UP.
4. EMERGENCY LIGHTING SHALL GIVES A VALUE OF ONE FOOT CANDLE AT FLOOR LEVEL. VERIFY IF ILLUMINATED SIGNS ARE TO HAVE BATTERY BACKUP.
5. EXIT PATH LIGHTING SHALL BE PROVIDED FOR STAIRWAY, HALLWAY, EXIT PASSAGEWAY AND EGRESS TO A PUBLIC WAY ANYTIME THE BUILDING IS OCCUPIED. EMERGENCY LIGHTING SHALL BE PROVIDED GIVING LIGHT VALUE OF ONE FOOT CANDLE AT THE FLOOR LEVEL.
6. PROVIDE A PORTABLE FIRE EXTINGUISHER WITH A RATING OF NOT LESS THAN 2-A-A10BC WITHIN 75 FEET TRAVEL DISTANCE TO ALL PORTIONS OF THE BUILDING ON EACH FLOOR AND DURING CONSTRUCTION. VERIFY WITH LOCAL JURISDICTION ON DISTANCE FOR FIRE EXTINGUISHERS.
7. PROVIDE FIRE EXTINGUISHERS AS REQUIRED BY THE FIRE DEPARTMENT FIELD INSPECTOR.
8. REFER TO FIRE SYSTEMS DRAWINGS FOR TYPICAL MOUNTING HEIGHTS OF FIRE PROTECTION EQUIPMENT.
9. MODIFY EXISTING AUTOMATIC FIRE EXTINGUISHER SYSTEM, AS NEEDED, TO BE APPROVED BY BUILDING AND SAFETY FIRE DEPARTMENT PRIOR TO INSTALLATION.

PARTITION NOTE

1. THE GENERAL CONTRACTOR SHALL PROVIDE AND INSTALL ALL PARTITIONS DESIGNATED ON ARCHITECTURAL PLANS.
2. UNLESS OTHERWISE NOTED, ALL DIMENSIONS FOR PARTITIONS ARE FROM FINISH FACE OF NEW WALLS / FINISH FACE OF EXISTING WALLS. ALL HEIGHTS ARE FROM THE TOP OF THE FINISHED FLOOR.
3. WALLS SHOWN ALIGNED WITH BASE BUILDING STRUCTURE SHALL BE FLUSH AND SMOOTH WITH BASE BUILDING STRUCTURE UNLESS OTHERWISE NOTED.
4. THE GENERAL CONTRACTOR SHALL USE CORNER BEADS AT ALL EXPOSED CORNERS AND EXPOSED ENDS IN PLASTER AND DRYWALL PARTITIONS.
5. ALL PARTITIONS SHALL BE ANCHORED FIRMLY AS PER MANUFACTURERS SPECIFICATIONS AND AS REQUIRED BY STATE AND LOCAL CODES.
6. THE GENERAL CONTRACTOR SHALL SUPPLY ALL RETURN AIR OPENINGS IN SLAB TO SLAB PARTITIONS ABOVE HUNG CEILINGS TO MATCH AREA CALCULATION REQUIREMENTS AS SHOWN ON ENGINEERING DRAWINGS. ALL OPENINGS IN DEMISING AND SOUND ATTENUATED WALLS TO HAVE SOUND BOOTS. OPENINGS IN FIRE RATED WALLS SHALL HAVE FIRE DAMPERS AS REQUIRED BY LOCAL BUILDING CODES. CONTRACTOR TO COORDINATE WITH ENGINEERING DRAWINGS AND INFORM THE ARCHITECT OF DISCREPANCIES PRIOR TO BID PROCESS.
7. THE GENERAL CONTRACTOR SHALL PROVIDE SUFFICIENT FRAMING FOR ALL WALL PARTITIONS FOR DUCT WORK, RETURN AIR OPENINGS AND GRILL OPENINGS ABOVE AND BELOW HUNG CEILING. THESE ARE TO BE COORDINATED WITH HVAC ENGINEERING DRAWINGS AND THE MECHANICAL CONTRACTOR'S SHOP DRAWINGS. ALL OPENINGS SHALL BE PROPERLY SEALED FOR SOUNDPROOFING AND VIBRATION.
8. THE GENERAL CONTRACTOR SHALL PROVIDE AND INSTALL ALL ACCESS PANELS AS REQUIRED FOR MECHANICAL, ELECTRICAL AND PLUMBING INSTALLATIONS PER LOCAL BUILDING CODES. LOCATIONS SHALL BE COORDINATED WITH THE TENANT CONSTRUCTION PROJECT MANAGER & LANDLORD PRIOR TO FINAL INSTALLATION.
9. THE GENERAL CONTRACTOR WILL NOT BE ENTITLED TO EXTRAS FOR OPENING ANY PARTITIONS BECAUSE OF TELEPHONE INSTALLATION, SECURITY SYSTEMS OR COMPUTER DATA SYSTEMS.
10. THE CONSTRUCTION PROJECT MANAGER SHALL HAVE THE RIGHT TO REVIEW AND APPROVE ALL CHALK LINES PRIOR TO INSTALLATION OF TRACK. THE ARCHITECT IS TO BE NOTIFIED OF ANY REQUIRED DEVIATION FROM CONSTRUCTION DIMENSIONS OR CLEARANCES AS DESIGNATED ON PLAN OR OF ANY APPARENT CONSTRUCTION CONFLICTS.
11. THE GENERAL CONTRACTOR IS TO VERIFY PRIOR TO PRICING THE RATING OF THE PARTITIONS, COLUMNS, ETC. THE GENERAL CONTRACTOR SHALL PROVIDE WALL FURRING AT PARTITIONS WITH A RATING OF GREATER THAN 1 HOUR AS NECESSARY TO ACCOMMODATE ELECTRICAL OR PLUMBING CONDITIONS AS INDICATED ON THIS DOCUMENT.
12. DRYWALL: LEVEL 5 FINISH REQUIRED THROUGHOUT (WALLS, SOFFITS, ETC.). ALL JOINTS AND INTERIOR ANGLES SHALL BE TAPED EMBEDDED IN JOINT COMPOUND AND THREE COATS OF JOINT COMPOUND APPLIED OVER ALL JOINTS, ANGLES, FASTENER HEADS, AND ACCESSORIES. ALL JOINT COMPOUND SHALL BE SMOOTH AND FREE OF TOOL MARKS AND RIDGES.

MILLWORK NOTES

1. THE GENERAL CONTRACTOR SHALL CLOSELY COORDINATE HIS WORK WITH THAT OF THE CABINET CONTRACTOR.
2. ALL "INSTALLED" CABINETS SHALL BE SCRIBED TO WALL OR CEILING. CABINET CONTRACTOR SHALL CHECK JOB PROGRESS AND COORDINATE WITH OTHER TRADES INVOLVED.
3. ALL CABINET FINISHES SHALL BE AS NOTED ON THE DETAILS DRAWINGS CONCERNED.
4. THE CABINET CONTRACTOR SHALL SUBMIT SHOP DRAWINGS AND SAMPLES TO THE ARCHITECT.
5. THE CABINET SHALL CONTRACTOR SHALL CHECK AND VERIFY ALL DIMENSIONS AT THE JOB SITE.
6. THE CABINET CONTRACTOR SHALL PROVIDE RUBBER BUMPERS ON ALL WOOD DOORS.
7. WHERE MEMBERS ARE MITERED OR BUTTED, THEY SHALL BE JOINED AND SECURED IN A MANNER TO INSURE AGAINST THE JOINT OPENING.
8. ALL FINISHED WORK SHALL, AS FAR AS PRACTICAL, BE ASSEMBLED AND FINISHED IN THE SHOP AND DELIVERED TO THE BUILDING READY TO ERECT IN PLACE.
9. ALL THE WORK SHALL BE FABRICATED, ASSEMBLED, FINISHED AND ERECTED TO MEET CURRENT WIC STANDARDS.
10. WHERE FILES ARE SHOWN AS BEING SET INTO CABINET WORK, THE CABINET CONTRACTOR SHALL SET AND BOLT ALL FILES TOGETHER.
11. ALL MILLWORK SHOP DRAWINGS ARE TO CALL OUT ALL MATERIALS AND FINISHES. ALL JOINTS, CORNERS AND EDGES ARE TO BE DETAILED IN INDIVIDUAL DETAILS. ALL DIMENSIONS, CRITICAL OR OTHERWISE, ARE TO BE CALLED OUT ON THE SHOP DRAWINGS. THE ARCHITECT WILL NOT REVIEW DRAWINGS WHICH ARE INCOMPLETE AND SHOW MINIMAL DETAILING.
12. COORDINATION OF MILLWORK, STONE, OR OTHER SPECIALTY CONTRACTORS IS THE RESPONSIBILITY OF THE GENERAL CONTRACTOR.
13. ALL MILLWORK, SPECIAL PRODUCTS, AND SPECIAL ASSEMBLIES ARE SUBJECT TO SUBMITTAL AND SHOP DRAWINGS REVIEW. SHOP DRAWINGS AND SUBMITTALS SHALL NOT BE WAIVED UNLESS WRITTEN PERMISSION TO DO SO IS GIVEN BY THE ARCHITECT.
14. ALL STANDARD WALL BACKING FOR CASEWORK, TOILET ACCESSORIES, HANGING WALL EQUIPMENT, ETC., SHALL BE 16 GA. GALVANIZED STEEL, 4" WIDE, COVERING 3 STUDS MINIMUM AND SCREWED TO METAL STUDS.
15. ALL MILLWORK SHOWN SHALL HAVE PLASTIC LAMINATE TOPS, EXPOSED SIDES, DOORS, AND DRAWER FRONTS, UNLESS OTHERWISE NOTED.
16. SHELVES AND SEMI-EXPOSED SURFACES, INCLUDING DRAWER INTERIORS, SHALL BE FINISHED WITH A CABINET LINER OF A UNIFORM COLOR THROUGHOUT.
17. ADJUSTABLE METAL STANDARDS SHALL BE DAPPED INTO THE SIDES OF CABINETS, UNLESS OTHERWISE NOTED.
18. DOOR AND DRAWER PULL HARDWARE SAMPLES ARE TO BE SUBMITTED TO THE ARCHITECT FOR APPROVAL PRIOR TO INSTALLATION.

PATCHING NOTES

1. THE GENERAL CONTRACTOR SHALL DO ALL CUTTING, FITTING, AND PATCHING WORK THAT MAY BE REQUIRED TO MAKE ALL PARTS COME TOGETHER PROPERLY AND FIT TO RECEIVE OR BE RECEIVED BY WORK OF OTHER CONTRACTORS SHOWN UPON OR REASONABLY IMPLIED BY THE DRAWINGS AND NOTES.
2. THE GENERAL CONTRACTOR SHALL PROVIDE ALL FLOOR CUT-OUTS AND PATCHING REQUIRED FOR THE INSTALLATION OF ALL WORK.
3. THE GENERAL CONTRACTOR SHALL SURVEY ALL EXISTING FINISHED SURFACES INCLUDING CORNER BEADS, STOPS, ETC. FOR CHIPS, CRACK HOLES, DAMAGED SURFACES AND DEFECTS AND REPAIR SAME TO THE SATISFACTION OF PROJECT MANAGER.
4. WHERE DOOR BUCKS HAVE BEEN REMOVED, REPAIR GAPS AND SURFACES TO ACHIEVE A CLASS 1 FINISH TO THE SATISFACTION OF CONSTRUCTION PROJECT MANAGER.
5. THE GENERAL CONTRACTOR SHALL METAL LATH OVER ALL NEW CONDUIT CHASES IN MASONRY PARTITIONS.
6. ALL DAMAGED EXISTING AREAS TO REMAIN AND EXISTING AREAS AFFECTED BY DEMOLITION OR NEW CONSTRUCTION WORK SHOWN ON DRAWINGS SHALL BE PATCHED AS REQUIRED TO MATCH IMMEDIATE EXISTING ADJACENT AREAS IN MATERIALS, FIRE RATING, FINISH AND COLOR UNLESS OTHERWISE NOTED.
7. ALL FIRE PROOFING REMOVED FROM COLUMNS AND BEAMS DURING THE COURSE OF CONSTRUCTION SHALL BE REPLACED WITH THE SAME MATERIAL AND RATING AS THAT WHICH WAS REMOVED.

PAINT & WALL COVERING NOTES

1. UNLESS OTHERWISE SPECIFIED, ALL AREAS ARE TO BE PAINTED IN ACCORDANCE WITH FINISH PLANS.
2. WALLS SHALL INCLUDE SURFACES FROM FLOOR TO CEILING, INCLUDING PILASTERS, FACIAS, JAMBS BUCKS, REVEALS, RETURNS, AND ALL VERTICAL SURFACES NOT INCLUDED IN CEILING.
3. PAINT COLORS SHALL BE SPECIFIED BY THE OWNER AND THE GENERAL CONTRACTOR SHALL SUBMIT 3 SAMPLES (12" X 12") FOR REVIEW BY THE OWNER / ARCHITECT.
4. ALL WALLS AND CEILINGS SHALL BE PROPERLY PREPARED, SPACKLE, SANDED, ETC. TO PROVIDE A PERFECTLY SMOOTH FINISH AND SURFACE READY FOR PRIME AND PAINT.
5. ALL EXISTING LOOSE PAINT SHALL BE REMOVED AND SPACKLE OR PLASTER PATCHED.
6. ALL EXISTING UNEVENNESS IN ALL PARTITIONS SHALL BE SANDED OR CHIPPED AWAY AND SURFACES PLASTER-PATCHED OR SPACKLE TO INSURE A PERFECTLY EVEN SURFACE.
7. ALL WOOD SHELVING AND PAINTED DOORS SHALL RECEIVE PRIMING, SANDING AND TWO FULL COATS OF SEMI-GLOSS ENAMEL FREE OF BRUSH MARKS, UNLESS OTHERWISE NOTED.
8. THE CONTRACTOR SHALL REMOVE ALL ELECTRICAL SWITCH PLATES AND OUTLET PLATES, SURFACE HARDWARE, ETC., PRIOR TO PAINTING, PROTECTING AND REPLACING SAME WHEN PAINTING HAS BEEN COMPLETED. HE SHALL REMOVE ALL PAINT FROM WHERE IT HAS SPILLED, SPLASHED OR SPLATTERED ON SURFACES, INCLUDING BUT NOT LIMITED TO LIGHT FIXTURES, DIFFUSERS, REGISTERS AND SLAB FITTINGS, ETC.
9. THE CONTRACTOR SHALL USE A LATEX BASE PAINT IN COLORS AND FINISHES SELECTED BY THE ARCHITECT. HE SHALL PROPERLY PREPARE ALL SURFACES TO RECEIVE ONE (1) PRIME COAT AND TWO (2) FINISH COAST OF PAINT IN COLOR SELECTED BY THE ARCHITECT.
10. THE CONTRACTOR SHALL EXAMINE ALL AREAS OF CONSTRUCTION AFTER COMPLETION OF WORK BY ALL TRADES (INCLUDING TELEPHONE INSTALLATION, FLOORING, ETC.) AND INDICATE ALL NECESSARY "TOUCH-UP" PAINTING AND/OR PATCHING.

PAINT & WALL COVERING NOTES

11. IT IS THE INTENT OF THE DRAWINGS THAT ALL EXPOSED SURFACES RECEIVE FINISHES AS INDICATED ON THE DRAWINGS OR IN THE SPECIFICATIONS UNLESS SPECIFICALLY NOTED OTHERWISE.ANY SURFACES WHICH DO NOT HAVE A SPECIFIC FINISH NOTED OR ARE NOTED TO REMAIN UNFINISHED SHALL BE BROUGHT TO THE ATTENTION OF THE ARCHITECT AND FINISHED PER THE ARCHITECT'S INSTRUCTION.
12. PAINT FRONT SIDE, BACK SIDE AND DOOR EDGES AT STRIKE SIDE AND HINGE SIDE. TOP AND BOTTOM PAINTED TO PREVENT WARPING.
13. PAINT ALL METAL ACCESS DOORS AND ACCESS PANELS TO MATCH ADJACENT WALL OR CEILING FINISH. GRAPHICS ON DOOR OR PANEL (IF ANY) ARE TO BE REPAINTED/RE-APPLIED TO MATCH EXISTING, IF APPLICABLE.
14. CLOSET WALL SURFACES ARE TO BE PAINTED TO MATCH THE COLOR OF THE ADJACENT OUTSIDE WALL SURFACES.

DOOR NOTES

1. THE GENERAL CONTRACTOR SHALL PROVIDE AND INSTALL REQUIRED BUCKS AND ASSEMBLIES AS SHOWN ON ARCHITECTURAL DRAWINGS UNLESS OTHERWISE NOTED.
2. THE GENERAL CONTRACTOR SHALL PROVIDE AND INSTALL DOORS AS SPECIFIED ON THE ARCHITECTURAL DRAWINGS UNLESS OTHERWISE NOTED.
3. ALL LOCK SETS SHALL BE CODED AND/OR KEYED IN ACCORDANCE WITH THE BUILDING REQUIREMENTS. CODES AND/OR KEYS ARE TO BE DELIVERED TO TENANT PROPERLY TESTED AND/OR TAGGED. THE NUMBER OF MASTER AND PASS KEYS SHALL BE COORDINATED WITH BUILDING MANAGEMENT.
4. DETAILED DOOR AND HARDWARE SCHEDULES SHALL BE SUBMITTED TO THE ARCHITECT FOR REVIEW, AND FABRICATION OF MATERIAL SHALL NOT BE COMMENCED UNTIL SUCH REVIEW HAS BEEN RETURNED.
5. MAXIMUM EFFORT TO OPERATE DOORS SHALL NOT EXCEED 8 1/2 POUNDS FOR EXTERIOR DOORS AND 5 POUNDS FOR INTERIOR DOORS, SUCH PULL/PUSH EFFORT BEING APPLIED AT RIGHT ANGLES TO HINGED DOORS AND AT THE CENTER PLANE OF THE SLIDING OR FOLDING DOORS. COMPENSATING DEVICES OR AUTOMATIC DOOR OPERATORS MAY BE UTILIZED TO MEET THE ABOVE WHEN FIRE DOORS ARE REQUIRED, THE MAXIMUM EFFORT TO OPERATE THE DOOR MAY BE INCREASED TO THE MINIMUM ALLOWABLE BY THE APPROPRIATE ADMINISTRATIVE, NOT TO EXCEED 15 POUNDS.
6. THE BOTTOM 10" OF ALL DOORS (EXCEPT SLIDING AND AUTOMATIC) SHALL HAVE A SMOOTH UNINTERRUPTED SURFACE.
7. ALL REQUIRED EXIT DOORWAYS SHALL HAVE A MINIMUM 32" CLEAR OPENING WITH THE DOOR AT 90° TO THE CLOSED POSITION.
8. WHERE DOORS ARE IN PAIRS, ONE OF A PAIR OF DOORS SHALL MEET THE MINIMUM WIDTH REQUIREMENTS
9. MAXIMUM HEIGHT OF THRESHOLD TO BE 1/2" MAXIMUM VERTICAL CHANGE AT EDGE IS 1/4" WITH A MAXIMUN BEVEL OF 45°.
10. LATCHING AND LOCKING DOORS THAT ARE HAND-ACTIVATED AND WHICH ARE IN THE PATH OF TRAVEL SHALL BE OPERABLE WITH A SINGLE EFFORT BY LEVER TYPE HARDWARE, PANIC BARS, PUSH PULL ACTIVATING BARS, OR BARS OR OTHER HARDWARE DESIGNED TO PROVIDE PASSAGE WITHOUT REQUIRING THE ABILITY TO GRASP THE OPENING HARDWARE.
11. SEE SHEET A8.1 FOR REQUIREMENTS OF DOORS, WINDOWS, AND HARDWARE, DOOR SCHEDULE, HARDWARE SCHEDULE AND DOOR AND WINDOW DETAILS.
12. DIMENSIONS TO EDGE OF DOOR LOCATING DOOR OPENINGS ARE TO INSIDE FACE OF JAMB, UNLESS OTHERWISE NOTED.
13. DOOR OPENINGS ARE TO BE LOCATED SO THAT INSIDE FACE OF BUTT SIDE JAMB IS 4" FROM FACE OF PERPENDICULAR WALL AT CORNER, ALLOWING FOR A 90 DEGREE SWING TYPICAL, UNLESS OTHERWISE NOTED.
14. SEE SHEET A8.1 FOR SPECIFIC DOOR AND HARDWARE REQUIREMENTS.
15. UNDERCUT BUILDING STANDARD INTERIOR DOORS AS REQUIRED TO CLEAR FINISHED FLOOR BY 1/4". ALL RATED DOORS SHALL BE ORDERED SO AS TO CLEAR THE FINISHED FLOOR BY 1/4", UNLESS OTHERWISE NOTED.
16. UNDERCUT RESTROOM DOORS 3/4" TO PROVIDE RETURN AIR FLOW FOR NEGATIVE AIR FLOW FOR EXHAUST FANS.
17. ANY GLAZING ON OR WITHIN 24" OF A DOOR (IN THE SAME PLACE) SHALL BE TEMPERED.

CEILING NOTES

1. FACIAS OR ANY BREAK IN THE CEILING HEIGHTS CREATED BY THE INSTALLATION AND/OR ALTERATION OF HEATING, VENTILATING, AIR CONDITIONING OF MECHANICAL DUCTS, PIPING OR OTHER EQUIPMENT SHALL BE FORMED OF GYPSUM WALLBOARD ON FURRING CHANNELS. HUNG CEILING HEIGHTS SHALL BE AS SHOWN ON ARCHITECTURAL DRAWINGS AND DETAILS.
2. ANY DEVIATION FROM HEIGHTS SHOWN WILL BE SUBMITTED TO THE CONSTRUCTION PROJECT MANAGER FOR REVIEW.
3. THE GENERAL CONTRACTORS CEILING CONTRACTOR SHALL CLOSELY COORDINATE HIS WORK WITH THAT OF THE FIXTURE, PLUMBING HVAC ELECTRICAL CONTRACTORS AND THE TELEPHONE COMPANY WHENEVER THEIR RESPECTIVE WORK IS CONTIGUOUS.
4. THE GENERAL CONTRACTOR SHALL PROVIDE AND INSTALL ALL CEILING ACCESS PANELS IN GYPSUM BOARD CEILINGS AS REQUIRED TO FURNISH ACCESS TO ALL AIR HANDLING UNITS, PHONE AND ELECTRICAL CONTROLS AS REQUIRED BY LOCAL BUILDING CODES. COORDINATE LOCATIONS WITH CONSTRUCTION PROJECT MANAGER PRIOR TO FINAL INSTALLATION.
5. PRIOR TO CLOSING UP ANY CEILING, ALL PLENUM SYSTEMS (HVAC, PLUMBING AND ELECTRIC) SHALL BE INSPECTED AND WHERE REQUIRED, TESTED BY CONTRACTOR'S ENGINEERS AND BY AUTHORITIES HAVING JURISDICTION TO INSURE THEIR PROPER INSTALLATION AND FUNCTION.
6. THE CEILING TILE JOINTS SHALL BE ALIGNED PERFECTLY WITH RECESSED LIGHTING FIXTURES.
7. ALL JOINTS IN THE TILE FIELD SHALL BE SQUARE, LEVEL, AND PERFECTLY ALIGNED WITH EACH OTHER AND WITH THE RECESSED LIGHTING FIXTURES.
8. CEILINGS IN CLOSETS SHALL BE OF THE SAME HEIGHTS AND CONSTRUCTION AS THAT OF ADJOINING SPACE, EXCEPT AS OTHERWISE NOTED.
9. THE GENERAL CONTRACTOR SHALL PROVIDE CUT-OUTS AND OTHER SPECIAL PROVISIONS IN ACOUSTICAL WORK AS REQUIRED FOR LIGHTING FIXTURES, REGISTERS, DIFFUSERS AND OTHER INSERTED ITEMS.

CEILING NOTES

10. SUSPENDED CEILING SHALL BE CONSTRUCTED IN ACCORDANCE WITH STATE AND LOCAL CODE FOR FIREPROOF STRUCTURES AND SMOKE CONTROL.
11. THE GENERAL CONTRACTOR SHALL REPAIR AND/OR REPLACE ANY AND ALL CEILING TILES WHICH ARE REMOVED TO FACILITATE PLENUM SYSTEM INSTALLATIONS.
12. THE GENERAL CONTRACTOR WILL NOT BE ENTITLED TO EXTRAS FOR OPENING ANY CEILING BECAUSE OF TELEPHONE INSTALLATION, SECURITY SYSTEMS OR COMPUTER DATA SYSTEMS.
13. PROVIDE BLOCKING/BACKING AND CEILING REINFORCEMENT FOR ALL CEILING MOUNTED ITEMS, (PLASMA SCREENS, ETC.).

FLOORING NOTES

1. THE GENERAL CONTRACTOR SHALL FLASH PATCH ALL CRACKS, HOLES OR OTHER IMPERFECTIONS (PROJECTIONS SHALL BE REMOVED AND PATCHED TO PROVIDE A CONTINUOUS SMOOTH FLOOR SURFACE). LEVEL NOT TO EXCEED 1/4" IN 10-0" NON-CUMULATIVE.
2. THE GENERAL CONTRACTOR SHALL NOTIFY THE CONSTRUCTION PROJECT MANAGER AFTER FL

PERMITTING PLANS

FOR

PAXTON AGING FACILITY





N
MES INC

LOCATION MAP
SCALE: 1"= 1000'

ENGINEER:

MUNICIPAL ENGINEERING SERVICES, INC.
8574 TURKEY BLUFF ROAD
NAVARRE, FLORIDA 32566
CONTACT: DALE E. LONG, PE, LEED AP
PHONE: (850) 939-5732
EMAIL: dlong@mesi-fl.com

OWNER/DEVELOPER:

CITY OF PAXTON
21872 U.S. HWY 331 N.
LAUREL HILL, FL 32567
CONTACT: HONORABLE ANN SEXTON, MAYOR
PHONE : (850) 834-2716
EMAIL: asexton@paxtonfl.net

SITE INFORMATION:

STREET ADDRESS: 22174 US HWY 331 N., LAUREL HILL, FL
PARCEL ID: 36-6N-21-40000-002-0011
PARCEL ZONING: N/A
PARCEL FUTURE LAND USE: MIXED USE
PROPOSED USE: MUNICIPAL
PARCEL SIZE: 2.31 ACRES

CITY COUNCIL

JENICE ARMSTRONG - CHAIRMAN
BILL McRAE - VICE CHAIRMAN
BOBBY KEMP
TRAVIS McMILLAN
DONNA SMITH

SHEET INDEX

C-000	COVER SHEET, SHEET INDEX & LOCATION MAP
C-001	GENERAL NOTES & LEGEND
C-002	EROSION & SEDIMENT CONTROL NOTES & DETAILS
C-100	FDOT 660' AERIAL
C-101	EXISTING CONDITIONS
C-102	DEMOLITION AND EROSION CONTROL PLAN
C-201	SITE PLAN
C-301	GRADING AND DRAINAGE PLAN
C-302	STORMWATER POND SECTIONS, DETAILS & NOTES
C-401	UTILITIES PLAN
C-501	GEOMETRY AND STRIPING PLAN
C-601	LANDSCAPING PLAN
C-701	CIVIL DETAILS
C-702	CIVIL DETAILS
C-703	CIVIL DETAILS
C-704	CIVIL DETAILS

ARCHITECTURE + ENGINEERING
License No. 30900
1230 Oakley Seaver Drive, Suite 200 - Clermont, FL 34711
P: 888-850-FFAE (3323)
www.forefrontae.com
FOREFRONT
Service Beyond Design
Dale E. Long, P.E.
P.E. #55393

COVER SHEET, SHEET INDEX & LOCATION MAP

PAXTON AGING FACILITY
22174 US HWY 331 N, PAXTON, FL 32567
WALTON COUNTY FLORIDA

MUNICIPAL ENGINEERING SERVICES INC
8574 Turkey Bluff Road, Navarre, Florida 32566 P: (850) 939-5732
CERTIFICATE OF AUTHORIZATION: CA—30886

REVISIONS

ANY DISCREPANCY OR ERROR IN DESIGN OR CONSTRUCTION SHALL BE BROUGHT TO THE ATTENTION OF THE DESIGN PROFESSIONAL OF RECORD FOR CLARIFICATION PRIOR TO COMMENCEMENT OF CONSTRUCTION.

JOB #: 230001
DATE: AUGUST 2023

C-000

© FOREFRONT ARCHITECTURE & ENGINEERING LLC 2014 THIS DOCUMENT AND/OR THE DESIGN CONCEPTS EXPRESSED HEREIN ARE THE PROPERTY OF FOREFRONT ARCHITECTURE & ENGINEERING LLC AND ALL RIGHTS OF OWNERSHIP, INCLUDING COPYRIGHT OF INTELLECTUAL PROPERTY, ARE RESERVED. ANY REPRODUCTIONS, COPYING, OR USE OF THIS DOCUMENT AND/OR THE DESIGN CONCEPT WITHOUT THE WRITTEN CONSENT OF FOREFRONT ARCHITECTURE & ENGINEERING LLC IS STRICTLY PROHIBITED AND PROTECTED BY UNITED STATES AND INTERNATIONAL LAW. IF PRINTED ON 11X17 SCALE IS HALF THE SIZE NOTED.

GENERAL NOTES:

1. THE OWNER INTENDS THAT THE CONTRACT DOCUMENTS WILL PROVIDE A COMPLETE AND FULLY FUNCTIONAL PROJECT. WHERE LABOR AND MATERIAL MAY BE REQUIRED TO PROVIDE A COMPLETE AND FULLY FUNCTIONAL PROJECT BUT IS NOT FULLY SPECIFIED, DETAILED, OR SHOWN AS A CONSTRUCTION ITEM, THE CONTRACTOR SHALL PROVIDE THE REQUIRED MATERIAL OR LABOR TO MEET THE INTENT OF THE CONTRACT DOCUMENTS. THIS REQUIREMENT MAY ONLY BE CONSTRUED AS A REQUIREMENT TO COMPLETE OR MAKE FUNCTIONAL CONSTRUCTION ITEMS SHOWN IN OR ON THE CONTRACT DOCUMENTS.
2. PRIOR TO COMMENCING CONSTRUCTION WITHIN THE PROJECT AREA(S), THE CONTRACTOR SHALL VIDEO THE EXISTING CONDITIONS AND AREAS ADJACENT TO THE PROJECT THAT MAY BE IMPACTED BY THE CONSTRUCTION. THE CONTRACTOR SHALL KEEP ONE COPY AND PROVIDE ONE COPY EACH TO THE OWNER AND OWNER'S CONSTRUCTION INSPECTION/ADMINISTRATION REPRESENTATIVE.
3. ALL FINAL CONSTRUCTION AND CONSTRUCTION WORK SHALL BE IN COMPLIANCE WITH ALL LOCAL, STATE AND FEDERAL BUILDING AND/OR CONSTRUCTION CODES, RULES OR REQUIREMENTS AS APPLICABLE.
4. ABOVE GROUND FEATURES SHOWN WHICH MAY AFFECT CONSTRUCTION WERE TAKEN FROM THE BEST AVAILABLE INFORMATION AND FIELD SURVEYS. THE OWNER DOES NOT GUARANTEE THAT ALL PHYSICAL FEATURES OR ABOVE GROUND OBSTRUCTIONS AFFECTING CONSTRUCTION ARE SHOWN. THE CONTRACTOR SHALL FAMILIARIZE HIMSELF/HERSELF WITH THE EXISTING CONDITIONS PRIOR TO SUBMITTING HIS/HER BID. THERE SHALL BE NO ADJUSTMENT OF THE CONTRACT PRICE FOR VISIBLE FEATURES AFFECTING CONSTRUCTION.
5. THE CONTRACT DOCUMENTS, SPECIFICATIONS, AND GEOTECHNICAL INVESTIGATION REPORT FOR THIS PROJECT ARE AN INTEGRAL PART OF THE CONSTRUCTION. THE CONTRACTOR SHALL FULLY REVIEW AND FOLLOW ALL REQUIREMENTS OF THESE DOCUMENTS IN THE COMPLETION OF THE WORK. ALL CONSTRUCTION SHALL BE IN STRICT COMPLIANCE WITH THE CONTRACT DOCUMENTS UNLESS OTHERWISE APPROVED IN WRITING BY THE OWNER OR OWNER'S AUTHORIZED REPRESENTATIVE.
6. ALL EXISTING FENCES, STORM DRAINS, PROPERTY CORNERS, SURVEY MONUMENTS, PAVEMENT, ROADS, SIDEWALKS, SIGNS OR ANY OTHER EXISTING OBJECTS OR STRUCTURES WHICH ARE NOT DESIGNATED FOR REMOVAL, BUT ARE DAMAGED OR DESTROYED BY THE CONTRACTOR OR BY ANYONE FOR WHOM THE CONTRACTOR IS RESPONSIBLE ARE TO BE REPLACED BY THE CONTRACTOR AT HIS EXPENSE. THE CONTRACTOR IS RESPONSIBLE FOR REPLACING IN KIND OR REPAIRING TO ORIGINAL CONDITION; MAILBOXES, DRIVEWAY CULVERTS, RETAINING WALLS, LANDSCAPING, ETC. THAT ARE DISTURBED, DAMAGED OR DESTROYED BY CONSTRUCTION ACTIVITIES.
7. THE LEGEND IS TYPICAL FOR ALL SHEETS. SOME ITEMS MAY NOT APPLY TO EACH SHEET.
8. CONTRACTOR SHALL LIMIT CONSTRUCTION ACTIVITIES TO THE LIMITS OF CONSTRUCTION, RIGHT-OF-WAYS AND/OR EASEMENTS SHOWN. CONTRACTOR SHALL BE LIABLE FOR ALL DAMAGE TO AND RESTORATION OF ALL AREAS OUTSIDE OF RIGHT-OF-WAYS AND EASEMENTS, AT HIS EXPENSE.
9. THE FLORIDA DEPARTMENT OF TRANSPORTATION (F.D.O.T.) DOCUMENTS "STANDARD PLANS FOR ROAD CONSTRUCTION" AND "STANDARD SPECIFICATIONS FOR ROAD AND BRIDGE CONSTRUCTION" ARE CONSIDERED PART OF THE CONTRACT DOCUMENTS OF THIS PROJECT BY REFERENCE. WHERE F.D.O.T. INDICES OR SPECIFICATIONS ARE REFERENCED IN THE CONSTRUCTION PLANS OR SPECIFICATIONS, THE CONTRACTOR SHALL COMPLY WITH THE REQUIREMENTS OF THE APPROPRIATE F.D.O.T. DOCUMENT(S) UNLESS OTHERWISE INDICATED ON, OR MODIFIED BY, THE CONSTRUCTION PLANS.
10. THE CONTRACTOR SHALL NOTIFY F.D.O.T. 48 HOURS PRIOR TO WORKING WITHIN THE F.D.O.T. RIGHT-OF-WAY (850) 836-5700.
11. IN THE EVENT THAT ANY STANDARDS OR SPECIFICATIONS AS DESCRIBED HEREIN OR SHOWN ON THE PLANS, ARE IN CONFLICT WITH EACH OTHER, THE MORE STRINGENT CRITERIA WILL APPLY. CONTRACTOR SHALL NOTIFY THE ENGINEER OF RECORD IMMEDIATELY AND IN WRITING. SHOULD THE MORE STRINGENT CRITERIA BE UNCLEAR, THE ENGINEER WILL PROVIDE AN INTERPRETATION AND DETERMINE WHICH CRITERIA IS TO BE USED.
12. THESE PLANS WERE BASED ON THE GEOTECHNICAL REPORT BY NOVA ENGINEERING & ENVIRONMENTAL, LLC, PHONE: (850) 249-6682. IT IS THE CONTRACTOR'S RESPONSIBILITY TO ACQUIRE A COPY OF THE REPORT(S) FROM THE GEOTECHNICAL ENGINEER, FAMILIARIZE THEMSELVES WITH THE CONDITIONS AS DESCRIBED IN THE REPORT(S), AND COMPLY WITH ALL RECOMMENDATIONS MADE IN THE REPORT(S) SPECIFICALLY FOR SOIL PREPARATION ON THE SITE. IT IS THE CONTRACTOR'S RESPONSIBILITY TO OBTAIN A COPY OF ALL SUPPLEMENTAL REPORTS FOR THIS PROJECT FROM THE OWNER AND TO FOLLOW THE SUPPLEMENTAL REPORTS' RECOMMENDATIONS.
13. THE OWNER, OWNER'S REPRESENTATIVES, AND INSPECTORS OF APPLICABLE GOVERNMENT AGENCIES HAVING JURISDICTION, SHALL AT ALL TIMES HAVE ACCESS TO THE WORK SITE. THE CONTRACTOR SHALL PROVIDE PROPER FACILITIES FOR SUCH ACCESS AND INSPECTIONS.
14. IT IS THE CONTRACTOR'S RESPONSIBILITY TO TAKE ALL REASONABLE AND PRUDENT PRECAUTIONS TO ENSURE THAT ALL COMPLETED WORK, MATERIALS AND EQUIPMENT STORED ON SITE ARE SAFE AND SECURE FROM UNAUTHORIZED ACCESS OR USE. SUCH PRECAUTIONS MAY INCLUDE INSTALLATION OF SIGNS, FENCES, OR POSTING OF SECURITY GUARDS.
15. THE CONTRACTOR SHALL COMPLY FULLY WITH ALL PERMIT REQUIREMENTS IMPOSED BY THE REGULATORY AGENCIES.
16. THE ENGINEER SHALL BE NOTIFIED A MINIMUM OF 48 HOURS IN ADVANCE OF ALL TESTING RELATED TO CIVIL WORK.
17. ALL DISCHARGE FROM ANY REQUIRED DEWATERING OPERATIONS SHALL BE RESTRICTED AND MAINTAINED ON SITE. PERCOLATION THROUGH TEMPORARY PONDS OR EVAPORATION ARE THE ONLY ALLOWABLE NON-PERMITTED MEANS OF DISPOSAL OF GROUNDWATER. THE CONTRACTOR AT HIS EXPENSE, MAY PROVIDE TESTING OF GROUNDWATER PER F.D.E.P. GUIDELINES INCLUDING FAC CHAPTER 62-621.300(2). THE CONTRACTOR WILL BE REQUIRED TO OBTAIN A "GENERIC PERMIT FOR THE DISCHARGE OF PRODUCED GROUNDWATER FROM ANY NON-CONTAMINATED SITE ACTIVITY" FROM F.D.E.P. IF REQUIRED AT HIS EXPENSE.
18. NO DEVIATIONS OR REVISIONS FROM THESE PLANS BY THE CONTRACTOR SHALL BE ALLOWED WITHOUT PRIOR APPROVAL FROM THE ENGINEER OF RECORD, F.D.O.T., AND THE OWNER.

GENERAL NOTES(SITE DEVELOPMENT):

1. NO DEVIATIONS OR REVISIONS FROM THESE PLANS BY THE CONTRACTOR SHALL BE ALLOWED WITHOUT PRIOR APPROVAL FROM THE ENGINEER OF RECORD AND THE OWNER. ANY DEVIATIONS MAY RESULT IN DELAYS IN OBTAINING A CERTIFICATE OF OCCUPANCY.
2. THE OWNER OR HIS AGENT SHALL ARRANGE/ SCHEDULE WITH THE CITY OF PAXTON A FINAL INSPECTION OF THE DEVELOPMENT UPON COMPLETION AND ANY INTERMEDIATE INSPECTIONS AT (850) 834-2489. "AS-BUILT" CERTIFICATION IS REQUIRED PRIOR TO REQUEST FOR FINAL INSPECTION/APPROVAL.
3. THIS SET OF PLANS IS FOR THE CIVIL CONSTRUCTION PORTIONS OF THE PROJECT. THE CONTRACTOR SHALL REVIEW AND BE FAMILIAR WITH THE ARCHITECTURAL/MECHANICAL/ELECTRICAL/PLUMBING AND STRUCTURAL PLANS AS APPLICABLE FOR BUILDING INTERFACES.
4. ALL ASPECTS OF THE STORMWATER/DRAINAGE COMPONENTS AND/OR TRANSPORTATION COMPONENTS SHALL BE COMPLETED PRIOR TO THE ISSUANCE OF THE FINAL CERTIFICATE OF OCCUPANCY.
5. RETENTION/DETENTION AREAS SHALL BE SUBSTANTIALLY COMPLETE PRIOR TO ANY CONSTRUCTION ACTIVITIES THAT MAY INCREASE STORMWATER RUNOFF RATES. THE CONTRACTOR SHALL CONTROL STORMWATER DURING ALL PHASES OF CONSTRUCTION AND TAKE ADEQUATE STEPS TO PREVENT THE EXCAVATED POND FROM BLINDING DUE TO SEDIMENTS.
6. DEVELOPER/CONTRACTOR SHALL RE-SHAPE PER PLAN SPECIFICATIONS, CLEAN OUT ACCUMULATED SILT, AND STABILIZE RETENTION/DETENTION POND(S) AT THE END OF CONSTRUCTION WHEN ALL DISTURBED AREAS HAVE BEEN STABILIZED AND PRIOR TO THE REQUEST FOR A FINAL INSPECTION.
7. THE ENGINEER OF RECORD SHALL PROVIDE TO THE CITY OF PAXTON, "AS-BUILT" RECORD DRAWINGS FOR VERIFICATION AND APPROVAL ONE (1) WEEK PRIOR TO REQUESTING A FINAL INSPECTION AND CERTIFICATE OF OCCUPANCY, OR PROVIDE "AS-BUILT" CERTIFICATION THAT THE PROJECT CONSTRUCTION ADHERES TO THE PERMITTED PLANS AND SPECIFICATIONS. THE "AS-BUILT" CERTIFICATION OR RECORD DRAWINGS MUST BE SIGNED, SEALED AND DATED BY A REGISTERED FLORIDA PROFESSIONAL ENGINEER.
8. THE CONTRACTOR SHALL BE RESPONSIBLE FOR THE MAINTENANCE OF ALL LANDSCAPE BUFFERS AND STORMWATER FACILITIES UNTIL THE PROJECT HAS BEEN ACCEPTED BY THE OWNER. ALL DISTURBED AREAS SHALL BE RETURNED TO EQUAL OR BETTER CONDITION.
9. THE OWNER SHALL BE RESPONSIBLE FOR THE OPERATION AND MAINTENANCE OF THE STORM WATER SYSTEM.
10. PRIOR TO CONSTRUCTION, SEPARATE BUILDING INSPECTION DEPARTMENT PERMITS SHALL BE OBTAINED AS REQUIRED.
11. ANY DAMAGE TO EXISTING ROADS DURING CONSTRUCTION WILL BE REPAIRED BY THE OWNER/DEVELOPER/CONTRACTOR PRIOR TO FINAL "AS-BUILT" SIGN-OFF FROM THE CITY.
12. PRIOR TO CONSTRUCTION, A SEPARATE BUILDING INSPECTION DEPARTMENT PERMIT SHALL BE OBTAINED FOR ALL RETAINING WALLS HIGHER THAN TWO (2) FEET.
13. IF ARCHAEOLOGICAL MATERIAL/PREHISTORIC ARTIFACTS SUCH AS POTTERY OR CERAMICS, STONE TOOLS OR METAL IMPLEMENTS, OR ANY OTHER PHYSICAL REMAINS THAT COULD BE ASSOCIATED WITH NATIVE AMERICAN CULTURES, OR EARLY COLONIAL OR AMERICAN SETTLEMENT ARE ENCOUNTERED AT ANY TIME, THE PROJECT SHOULD CEASE ALL ACTIVITIES INVOLVING SUBSURFACE DISTURBANCE IN THE IMMEDIATE VICINITY OF SUCH DISCOVERIES. THE APPLICANT/RECIPIENT, OR OTHER DESIGNEE, SHOULD CONTACT THE FLORIDA DEPARTMENT OF STATE, DIVISION OF HISTORICAL RESOURCES, THE STATE HISTORIC PRESERVATION OFFICER (SHPO) AND THE DSH/FEMA REGION IV ENVIRONMENTAL OFFICER AND FDEM STATE ENVIRONMENTAL LIAISON OFFICER FOR FURTHER GUIDANCE. PROJECT ACTIVITIES SHOULD NOT RESUME WITHOUT VERBAL AND/OR WRITTEN AUTHORIZATION FROM THE DIVISION OF HISTORICAL RESOURCES.
14. IN THE EVENT THAT UNMARKED HUMAN REMAINS ARE ENCOUNTERED DURING PERMITTED ACTIVITIES; ALL WORK MUST STOP IMMEDIATELY AND THE PROPER AUTHORITIES NOTIFIED IN ACCORDANCE WITH F.S. 872.05.

HAZARDOUS MATERIALS NOTES:

1. THE CONTRACTOR SHALL BE RESPONSIBLE FOR COMPLIANCE WITH LOCAL STATE AND FEDERAL REGULATIONS REGARDING TESTING FOR AND DISPOSAL OF HAZARDOUS MATERIALS DURING DEMOLITION.
2. HAZARDOUS MATERIAL MEANS ANY SUBSTANCE: (A) THE PRESENCE OF WHICH REQUIRES INVESTIGATION OR REMEDIATION UNDER ANY PRESENT FEDERAL, STATE OR LOCAL STATUTE, REGULATION, ORDINANCE, RULE, CODE, ACTION, POLICY OR COMMON LAW, OR (B) WHICH IS OR BECOMES DEFINED AS A "HAZARDOUS WASTE", "HAZARDOUS SUBSTANCE" POLLUTANT OR CONTAMINANT UNDER ANY PRESENT FEDERAL, STATE OR LOCAL STATUTE, REGULATION, RULE OR ORDINANCE OR AMENDMENTS THERETO INCLUDING, WITHOUT LIMITATION, THE COMPREHENSIVE ENVIRONMENTAL RESPONSE COMPENSATION AND LIABILITY ACT (42 USC SECTIONS 9601 ET SEQ.) AND/OR THE RESOURCE CONSERVATION AND RECOVERY ACT (42 USC SECTIONS 6901 ET SEQ.), OR (C) WHICH IS TOXIC, EXPLOSIVE, CORROSIVE, FLAMMABLE, INFECTIOUS, RADIOACTIVE, CARCINOGENIC, MUTAGENIC, OR OTHERWISE HAZARDOUS AND IS REGULATED BY ANY GOVERNMENTAL AUTHORITY, AGENCY, DEPARTMENT, COMMISSION, BOARD, AGENCY OR INSTRUMENTALITY OF THE UNITED STATES, THE STATE IN WHICH THE PREMISES ARE LOCATED OR ANY POLITICAL SUBDIVISION THEREOF, OR (D) THE PRESENCE OF WHICH ON THE PREMISES CAUSES OR THREATENS TO CAUSE A NUISANCE UPON THE PREMISES OR TO ADJACENT PROPERTIES OR POSES OR THREATENS TO POSE A HAZARD TO THE HEALTH OR SAFETY OF PERSONS ON OR ABOUT THE PREMISES, OR (E) WHICH CONTAINS GASOLINE, DIESEL FUEL, OR OTHER PETROLEUM HYDROCARBONS, OR (F) WHICH CONTAINS POLYCHLORINATED BIPHENYL (PCB'S), ASBESTOS, LEAD OR UREA FORMALDEHYDE FOAM INSULATION.
3. CONTRACTOR AND ITS SUBCONTRACTORS SHALL USE, HANDLE, TEST TRANSPORT, AND DISPOSE OF ALL HAZARDOUS MATERIALS (AS DEFINED HEREIN) IN COMPLIANCE WITH ALL CURRENT FEDERAL, STATE AND LOCAL ENVIRONMENTAL, HEALTH OR SAFETY LAW, INCLUDING, BUT NOT LIMITED TO, ALL SUCH STATUTES, REGULATIONS, RULES, ORDINANCES, CODES, AND RULES OF COMMON LAW.
4. CONTRACTOR FURTHER AGREES THAT CONTRACTOR AND ITS SUBCONTRACTORS SHALL NOT CAUSE THE DISCHARGE, RELEASE, OR DISPOSAL OF ANY HAZARDOUS MATERIAL CREATED BY ITS WORK ON OR ABOUT THE JOB SITE. IN THE EVENT OF ANY SPILL, RELEASE, OR ANY OTHER REPORTABLE OCCURRENCE, CONTRACTOR SHALL NOTIFY THE APPROPRIATE GOVERNMENTAL AGENCY AND SHALL TAKE SUCH ACTION AS MAY BE NECESSARY TO MINIMIZE THE DELETERIOUS EFFECT OF SUCH A SPILL ON PERSONS OR PROPERTY.

PROJECT SAFETY NOTES:

1. THE CONTRACTOR SHALL BE SOLELY LIABLE FOR THE SAFETY OF THE WORK AND ANY AND ALL DAMAGES ARISING FROM THE CONSTRUCTION SHOWN ON THE PLANS. THE CONTRACTOR SHALL BE SOLELY RESPONSIBLE FOR ASSURING THAT THE CONSTRUCTION MATERIALS AND METHODS ARE COMPLIANT WITH ALL APPLICABLE LOCAL, STATE OR FEDERAL SAFETY CODES, RULES, OR REQUIREMENTS.
2. THE CONTRACTOR SHALL COMPLY IN EVERY RESPECT WITH THE FEDERAL OCCUPATIONAL SAFETY AND HEALTH ACT OF 1970 (OSHA) AND ALL RULES AND REGULATIONS NOW OR HEREAFTER IN EFFECT UNDER THIS ACT. THE CONTRACTOR FURTHER AGREES TO COMPLY WITH ANY AND ALL APPLICABLE STATE LAWS AND REGULATIONS PERTAINING TO JOB SAFETY AND HEALTH.
3. THE CONTRACTOR SHALL PROTECT AND KEEP THE OWNER (INCLUDING THEIR AGENTS, CONSULTANTS, AND EMPLOYEES) FREE AND HARMLESS FROM ANY AND ALL LIABILITY, PUBLIC OR PRIVATE, PENALTIES, CONTRACTUAL OR OTHERWISE, LOSSES, DAMAGES, COSTS, ATTORNEY'S FEES, EXPENSES, CAUSES OF ACTION, ETC. RESULTING FROM THE FEDERAL OCCUPATIONAL SAFETY AND HEALTH ACT OF 1970 AS AMENDED.

RECORD DRAWING NOTES:

1. PRIOR TO CONSTRUCTION, THE CONTRACTOR WILL OBTAIN A COPY OF THE MINIMUM REQUIREMENTS FOR AS-BUILT RECORD DRAWING ACCEPTANCE FOR THE AGENCY HAVING JURISDICTION (AHJ) SUCH AS A COUNTY OR CITY, AND/OR A UTILITY SERVICE PROVIDER. THE CONTRACTOR SHALL FAMILIARIZE THEMSELVES WITH THESE REQUIREMENTS AND PRODUCE AS-BUILT RECORD DRAWINGS THAT SUBSTANTIALLY COMPLY WITH OR EXCEED THESE REQUIREMENTS.
2. THE CONTRACTOR SHALL SUBMIT TO THE ENGINEER OF RECORD REDLINE DRAWINGS DEPICTING THE AS-BUILT CONDITION AT LEAST TWO (2) WEEKS PRIOR TO REQUESTING A FINAL INSPECTION OF THE WORK TO BE CERTIFIED.
3. THE CONTRACTOR SHALL MAINTAIN RECORD DRAWINGS DURING CONSTRUCTION WHICH SHOW THE AS-BUILT CONDITIONS OF ALL WORK INCLUDING PIPING, FITTINGS, DRAINAGE STRUCTURES, POND TOPOGRAPHY, OUTLET STRUCTURE DIMENSIONS, GRADING, ELEVATIONS, ETC. RECORD DRAWINGS SHALL BE PROVIDED TO THE ENGINEER OF RECORD PRIOR TO REQUESTING A FINAL INSPECTION.
4. THE CONTRACTOR SHALL KEEP A DAILY SET OF AS-BUILT DRAWINGS WHILE THE WORK IS BEING DONE IS VISIBLE AND EXPOSED ACCORDING TO THE CRITERIA CONTAINED HEREIN.
5. THE OWNER RESERVES THE RIGHT TO REQUIRE THAT THE CONTRACTOR UNCOVER, RE-TEST, AND/OR PERFORM ANY ACTION NECESSARY TO ENSURE THAT THE IMPROVEMENTS HAVE BEEN CONSTRUCTED IN ACCORDANCE WITH THE PLANS AND SPECIFICATIONS.
6. THE CONTRACTOR WILL BE RESPONSIBLE FOR PROVIDING SUFFICIENT AS-BUILT INFORMATION TO CONVEY THAT THE CONSTRUCTION HAS BEEN COMPLETED WITHIN ACCEPTABLE TOLERANCES. AS-BUILT INFORMATION SHALL INCLUDE BUT IS NOT LIMITED TO THE FOLLOWING:
   A. SANITARY SEWER:
      1) TOP ELEVATION OF ALL MANHOLE FRAME AND COVERS.
      2) INVERT OF EACH LINE ENTERING AND EXITING EACH MANHOLE STRUCTURE.
      3) LENGTH OF EACH RUN OF MAIN BETWEEN MANHOLES (MEASURED FROM CENTER TO CENTER OF MANHOLE)
      4) PIPE SLOPE (GRADE) BETWEEN MANHOLES.
      5) LOCATE ALL SERVICE WYES FROM THE DOWNSTREAM MANHOLE. PROVIDE A LATERAL DEPTH AT THE LOT LINE AS WELL AS AN OFFSET DISTANCE FROM THE MAIN.
      6) LOCATE WITH MEASUREMENTS (MINIMUM TWO-POINT TIES) FROM PERMANENT VISIBLE OBJECTS ALL FITTINGS, STUB-OUTS, ACCESSORIES, ETC. NOT VISIBLE FROM THE SURFACE.
   B. STORM DRAINAGE:
      1) TOP ELEVATION OF EACH STRUCTURE FRAME AND COVER AS WELL AS THE TOP ELEVATION OF ALL HEADWALLS, CONTROL STRUCTURES, ETC.
      2) INVERT OF EACH LINE ENTERING AND EXITING EACH STRUCTURE.
      3) INVERTS OF ALL PIPE OUTFALLS.
      4) PIPE SLOPE (GRADE) BETWEEN STRUCTURES.
      5) LENGTH OF RUN OF MAIN BETWEEN STORMWATER STRUCTURES (MEASURED FROM CENTER TO CENTER OF STRUCTURE)
      6) PROVIDE DIMENSIONS AND INVERTS FOR ALL UNDERDRAINS INCLUDING FITTINGS AND CLEANOUTS.
      7) POND TOPOGRAPHY:
         i. CROSS-SECTIONS
         ii. SAND CHIMNEY DIMENSIONS
         iii. OVERFLOW STRUCTURE INFORMATION
      8) LOCATE WITH MEASUREMENTS (MINIMUM TWO-POINT TIES) FROM PERMANENT VISIBLE OBJECTS ALL FITTINGS, STUB-OUT, ACCESSORIES, ETC. NOT VISIBLE FROM THE SURFACE.
   C. PRESSURE MAINS (WATER AND SEWER):
      1) ACTUAL LENGTH OF PIPE BETWEEN EACH BRANCH OR VALVE IN RUN.
      2) LOCATE ALL FITTINGS WITH MEASUREMENTS (MINIMUM TWO-POINT TIES) FROM PERMANENT VISIBLE OBJECTS ALL FITTINGS, STUB-OUT, ACCESSORIES, ETC. NOT VISIBLE FROM THE SURFACE.
      3) LIST THE DEPTH OF LINES AT ALL VALVES, FITTINGS, AND FIRE HYDRANTS.
      4) DIMENSIONS WHICH CLEARLY DEMONSTRATE COMPLIANCE WITH MINIMUM SEPARATION DISTANCES OR REQUIRED PIPE UPGRADES (ENCASEMENT).
   D. OTHER IMPROVEMENTS:
      1) LOCATE BUILDINGS, SIDEWALKS, PAVEMENT, CURB AND GUTTER, ETC. AS APPLICABLE.

LEGEND:

EXISTING		PROPOSED	
CMP	-CORRUGATED METAL PIPE		-CONTOURS
CORP	-CORPORATE		-ASPHALT
(D)	-DEED		-CONCRETE
E	-EAST		-GRAVEL
(F)	-FIELD		
FB	-FIELD BOOK		-AIR CONDITION CONDENSING UNITS
FCM	-FOUND CONCRETE MONUMENT		-CLEANOUT
FDOT	-FLORIDA DEPARTMENT OF TRANSPORTATION	BF	-BACKFLOW PREVENTOR
FIP	-FOUND IRON PIPE		-WATER METER
FIR	-FOUND IRON ROD		-SITE LIGHTING
FND	-FOUND, FOUND NAIL AND DISC		
LB	-LAND SURVEY BUSINESS		
LS	-LAND SURVEYOR		
LSA	-LANDSCAPE AREA		
MES	-MITERED END SECTION		
N	-NORTH		
ND	-NAIL AND DISK		
NFIP	-NATIONAL FLOOD INSURANCE PROGRAM		
OHU	-OVERHEAD UTILITIES		
ORB	-OFFICIAL RECORDS BOOK		
(P)	-PLAT		
PG	-PAGE		
PRM	-PERMANENT REFERENCE MONUMENT		
PSM	-PROFESSIONAL SURVEYOR & MAPPER		
RLS	-REGISTERED LAND SURVEYOR		
S	-SOUTH		
W	-WEST		
△	-DELTA		
°	-DEGREES		
'	-MINUTES OR FEET		
"	-SECONDS OR INCHES		
#	-NUMBER		
	-DISTANCE NOT TO SCALE		
	-CLEANOUT		
	-METER BOX		
	-BACK FLOW PREVENTER		
	-SIGN		
OHU	-UTILITY LINE		
	-PICNIC TABLE		
	-LIGHT POLE		
	-UTILITY POLE		
	-GUY WIRE		
	-TEMPORARY BENCH MARK		
	-CONTOURS		
	-ASPHALT		
	-CONCRETE		
	-GRAVEL		
	-STORM DRAIN		
	-MITER END SECTION		
MB	-MAILBOX		
	-OUTLET		
	-SPIGOT		
0000	-ADDRESS		
AC/W	-AIR CONDITIONER CONDENSER		
OC	-FIBER OPTIC CABLE MARKER		
	-GROUND LIGHT		

ARCHITECTURE + ENGINEERING
License No. 30900
License No. 26002939
1230 Oakley Seaver Drive, Suite 200 - Clermont, FL 34711
P: 888-850-FFAE (3323)
www.forefrontae.com
FOREFRONT
Service Beyond Design
Dale E. Long, P.E.
P.E. #55393

GENERAL NOTES AND LEGEND

PAXTON AGING FACILITY
22174 US HWY 331 N, PAXTON, FL 32567
WALTON COUNTY FLORIDA

MUNICIPAL ENGINEERING SERVICES INC
8874 Turkey Bluff Road - Navarre, Florida 32566 - P: (850) 939-3732
CERTIFICATE OF AUTHORIZATION #CA-26068

REVISIONS

ANY DISCREPANCY OR ERROR IN DIMENSIONS OR NOTES SHALL BE BROUGHT TO THE ATTENTION OF THE DESIGN PROFESSIONAL FOR CLARIFICATION PRIOR TO COMMENCEMENT OF CONSTRUCTION.

JOB #: 230001
DATE: AUGUST 2023

C-001

© FOREFRONT ARCHITECTURE & ENGINEERING LLC 2014 THIS DOCUMENT AND/OR THE DESIGN CONCEPTS EXPRESSED HEREIN ARE THE PROPERTY OF FOREFRONT ARCHITECTURE & ENGINEERING LLC AND ALL RIGHTS OF OWNERSHIP, INCLUDING COPYRIGHT OF INTELLECTUAL PROPERTY, ARE RESERVED. ANY REPRODUCTIONS, COPYING, OR USE OF THIS DOCUMENT AND/OR THE DESIGN CONCEPT WITHOUT THE WRITTEN CONSENT OF FOREFRONT ARCHITECTURE & ENGINEERING LLC IS STRICTLY PROHIBITED AND PROTECTED BY UNITED STATES AND INTERNATIONAL LAW. IF PRINTED ON 11X17 SCALE IS HALF THE SIZE NOTED.

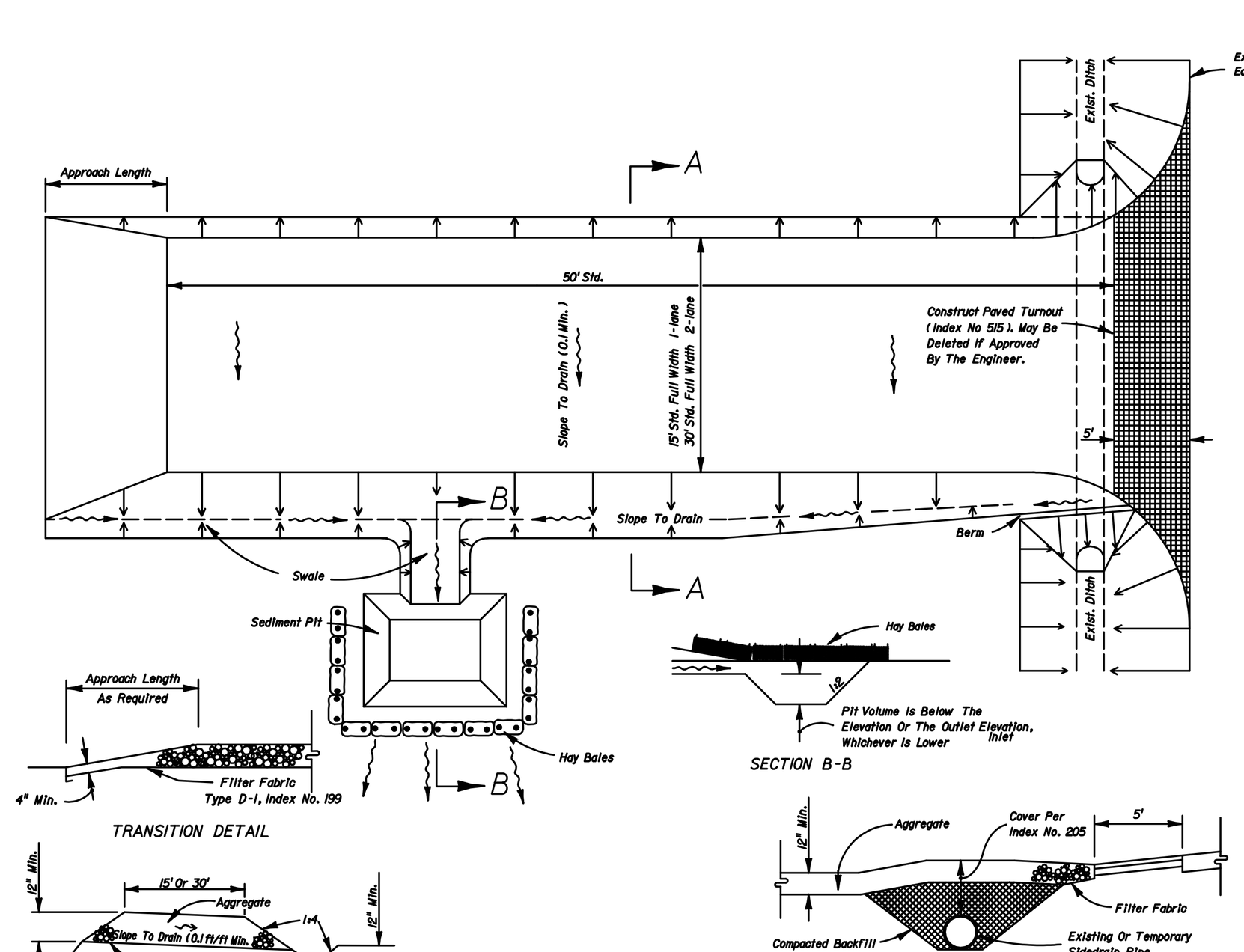

GENERAL NOTES:

1. A SOIL TRACKING PREVENTION DEVICE (STPD) SHALL BE CONSTRUCTED AT APPROPRIATE LOCATIONS FOR POINTS OF EGRESS FROM UNSTABILIZED AREAS OF THE PROJECT TO PUBLIC ROADS WHERE OFFSITE TRACKING OF MUD COULD OCCUR. TRAFFIC FROM UNSTABILIZED AREAS OF THE CONSTRUCTION PROJECT SHALL BE DIRECTED THRU A STPD. BARRIERS, FLAGGING, OR OTHER POSITIVE MEANS SHALL BE USED AS REQUIRED TO LIMIT AND DIRECT VEHICULAR EGRESS ACROSS THE STPD.
2. ALL MATERIALS SPILLED, DROPPED, OR TRACKED ONTO PUBLIC ROADS (INCLUDING THE STPD AGGREGATE AND CONSTRUCTION MUD) SHALL BE REMOVED DAILY, OR MORE FREQUENTLY IF SO DIRECTED BY THE ENGINEER.
3. AGGREGATES SHALL BE AS DESCRIBED IN SECTION 901 OF THE F.D.O.T. STANDARD SPECIFICATIONS EXCLUDING 901-2.3. AGGREGATES SHALL BE F.D.O.T. SIZE #1. IF THIS SIZE IS NOT AVAILABLE, THE NEXT AVAILABLE SMALLER SIZE AGGREGATE MAY BE SUBSTITUTED WITH THE APPROVAL OF THE ENGINEER. SIZES CONTAINING EXCESSIVE SMALL AGGREGATE WILL TRACK OFF THE PROJECT AND ARE UNSUITABLE.
4. THE SEDIMENT PIT SHOULD PROVIDE A RETENTION VOLUME OF 3600 CUBIC FEET/ACRE OF SURFACE AREA DRAINING TO THE PIT. WHEN THE STPD IS ISOLATED FROM OTHER DRAINAGE AREAS, THE FOLLOWING PIT VOLUMES WILL SATISFY THIS REQUIREMENT:
   15'x 50'=100 FT³ 30'x 50'=200 FT³
   AS AN OPTION TO THE SEDIMENT PIT, THE WIDTH OF THE SWALE BOTTOM CAN BE INCREASED TO OBTAIN THE VOLUME. WHEN THE SEDIMENT PIT OR SWALE IS USED, HAY BALES OR SILT FENCE SHALL BE PLACED ALONG THE ENTIRE LENGTH.
5. THE SWALE DITCH DRAINING THE STPD SHALL HAVE A 0.2% MINIMUM AND A 1.0% MAXIMUM GRADE ALONG THE STPD AND TO THE SEDIMENT PIT.
6. MITRED END SECTIONS ARE NOT REQUIRED WHEN THE SIDEDRAIN PIPE SATISFIES THE CLEAR ZONE REQUIREMENTS.
7. THE STPD SHALL BE MAINTAINED IN A CONDITION THAT WILL ALLOW IT TO PERFORM ITS FUNCTION. TO PREVENT OFFSITE TRACKING, THE STPD SHALL BE RINSED (DAILY WHEN IN USE) TO MOVE ACCUMULATED MUD DOWNWARD THRU THE STONE. ADDITIONAL STABILIZATION OF THE VEHICULAR ROUTE LEADING TO THE STPD MAY BE REQUIRED TO LIMIT THE MUD TRACKED.
8. THE NOMINAL SIZE OF A STANDARD STPD IS 15'x 50' UNLESS OTHERWISE SHOWN IN THE PLANS. IF THE VOLUME OF ENTERING AND EXITING VEHICLES WARRANT, A 30' WIDTH STPD MAY BE USED IF APPROVED BY THE ENGINEER.

SOIL TRACKING PREVENTION DEVICE (CONSTRUCTION EXIT)

NOT TO SCALE

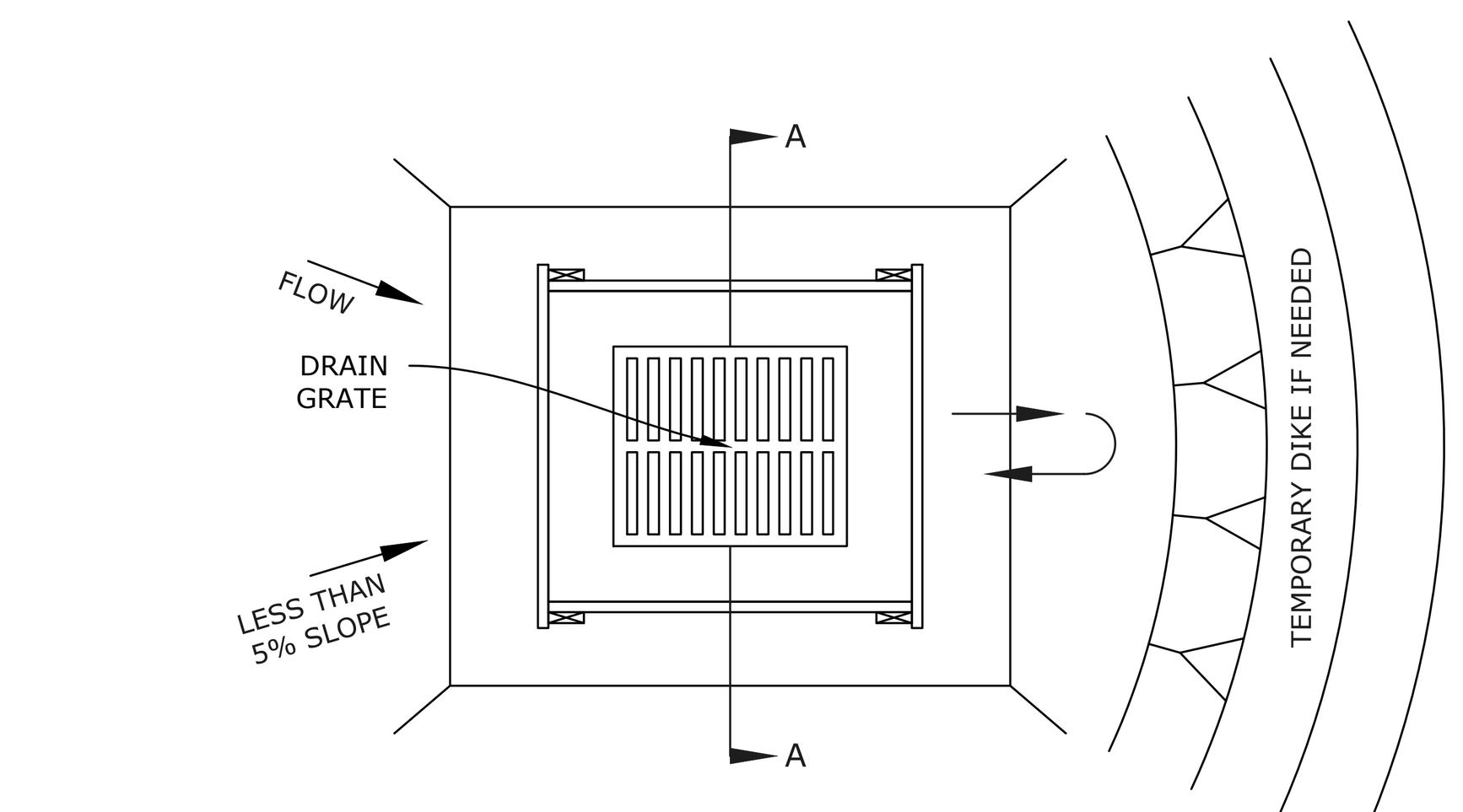

PLAN VIEW

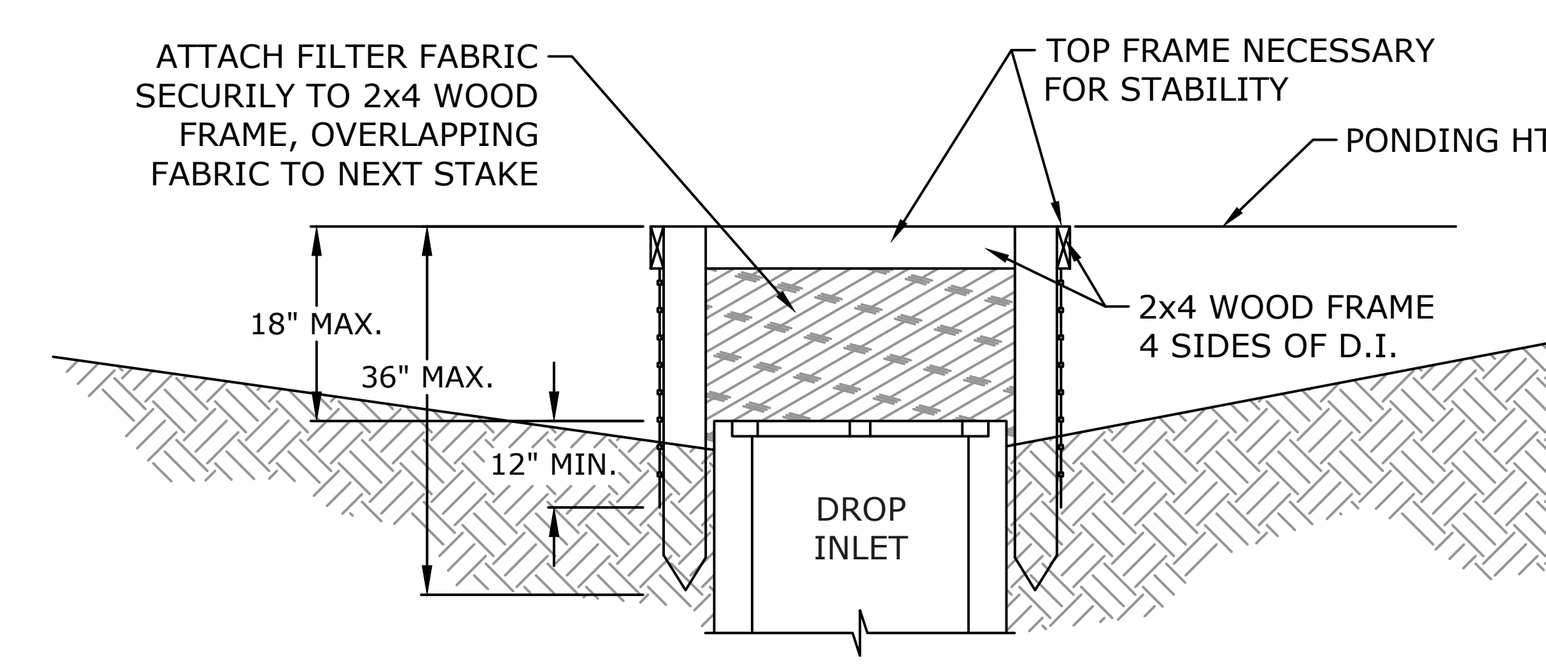

SECTION A-A

NOTES:

1. DROP INLET SEDIMENT BARRIERS ARE TO BE USED FOR SMALL, NEARLY LEVEL DRAINAGE AREAS. (LESS THAN 5%)
2. USE 2x4 WOOD OR EQUIVALENT METAL STAKES, (3 FT. MIN. LENGTH)
3. INSTALL 2x4 WOOD TOP FRAME TO INSURE STABILITY.
4. THE TOP OF THE FRAME (PONDING HEIGHT) MUST BE WELL BELOW THE GROUND ELEVATION DOWNSLOPE TO PREVENT RUNOFF FROM BY-PASSING THE INLET. A TEMPORARY DIKE MAY BE NECESSARY ON THE DOWNSLOPE SIDE OF THE STRUCTURE.
5. FILTER FABRIC SHALL BE PLACED AND MAINTAINED UNDER THE GRATE.

SILT FENCE DROP INLET SEDIMENT BARRIER DETAIL

NOT TO SCALE

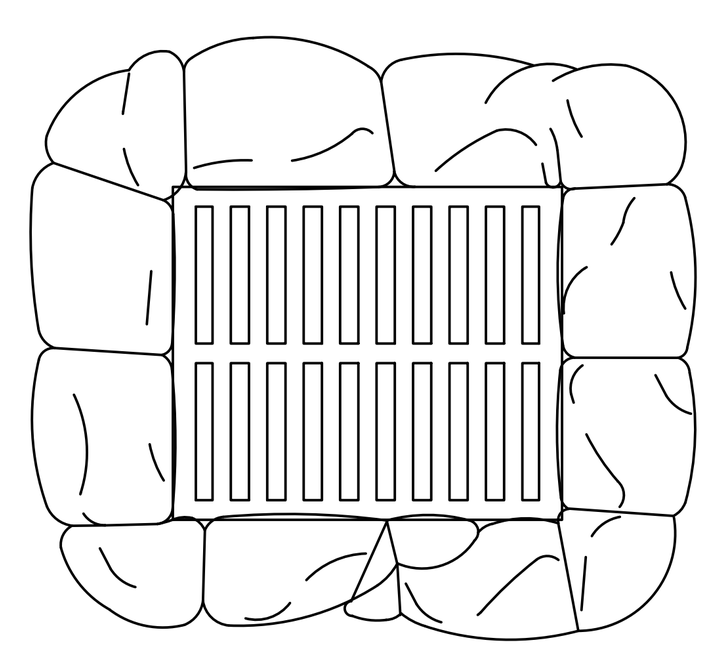

NOTES:

1. THE FILTER SOCK SHOULD BE PLACED AROUND THE ENTIRE CIRCUMFERENCE OF THE DROP INLET AND SHOULD ALLOW FOR AT LEAST 1 FOOT OF OVERLAP ON EITHER SIDE OF THE OPENING BEING PROTECTED. STAKES SHOULD BE USED TO KEEP THE SOCK IN PLACE.
2. UNDER LOW-FLOW CONDITIONS, A 9-INCH OR 12-INCH SOCK DIAMETER SHOULD SUFFICE.
3. SEDIMENT WILL COLLECT AROUND THE OUTSIDE OF THE FILTER SOCK AND SHOULD BE REMOVED WHEN THE SEDIMENT REACHES ONE-HALF OF THE SOCK HEIGHT.
4. FILTER FABRIC SHALL BE PLACED AND MAINTAINED UNDER THE GRATE.

FILTER SOCK DROP INLET FILTER DETAIL

NOT TO SCALE

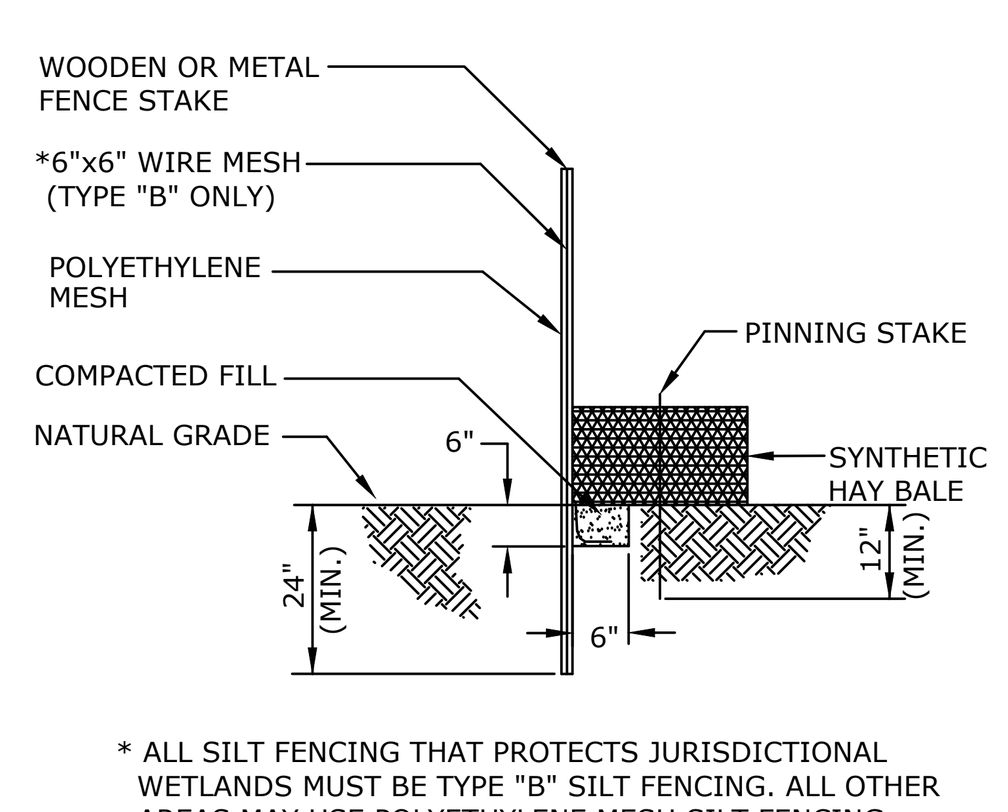

* ALL SILT FENCING THAT PROTECTS JURISDICTIONAL WETLANDS MUST BE TYPE "B" SILT FENCING. ALL OTHER AREAS MAY USE POLYETHYLENE MESH SILT FENCING.

SILT FENCE DETAIL

NOT TO SCALE

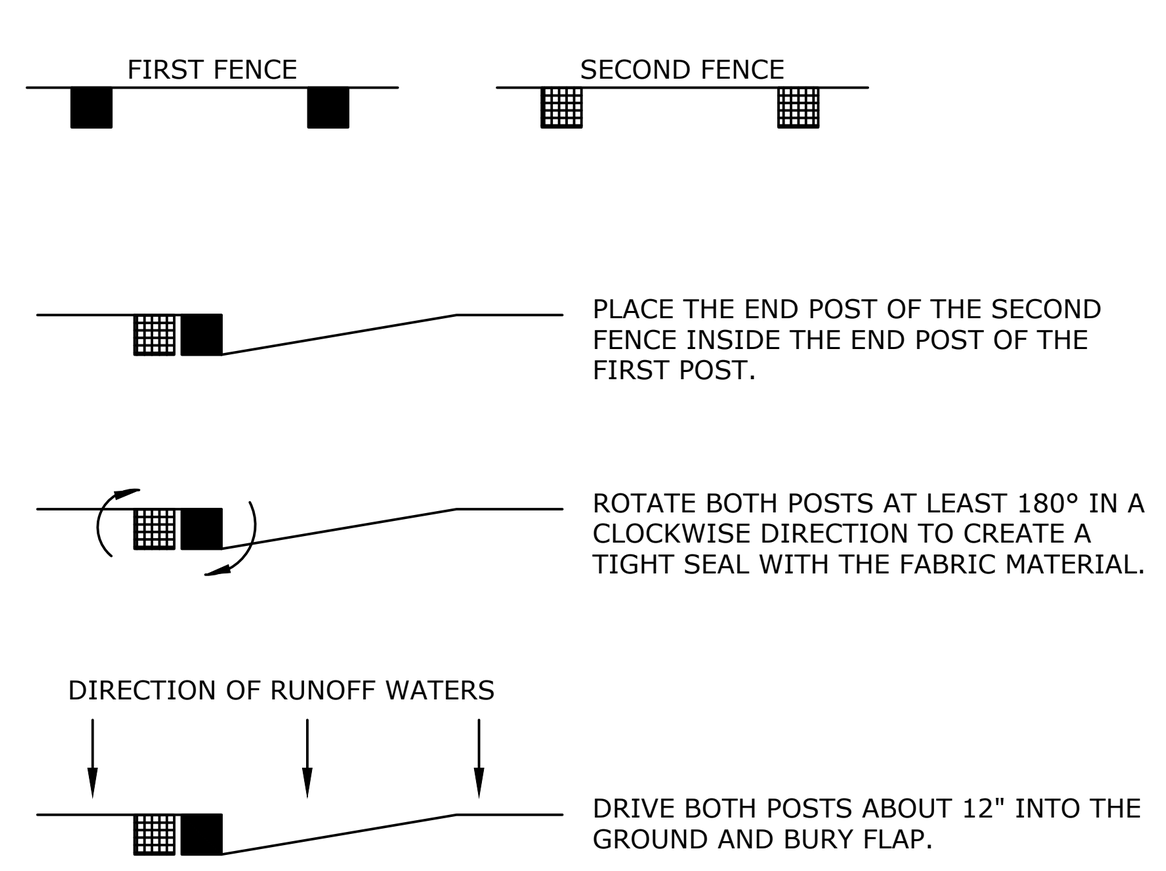

BUTTING SILT FENCE DETAIL

NOT TO SCALE

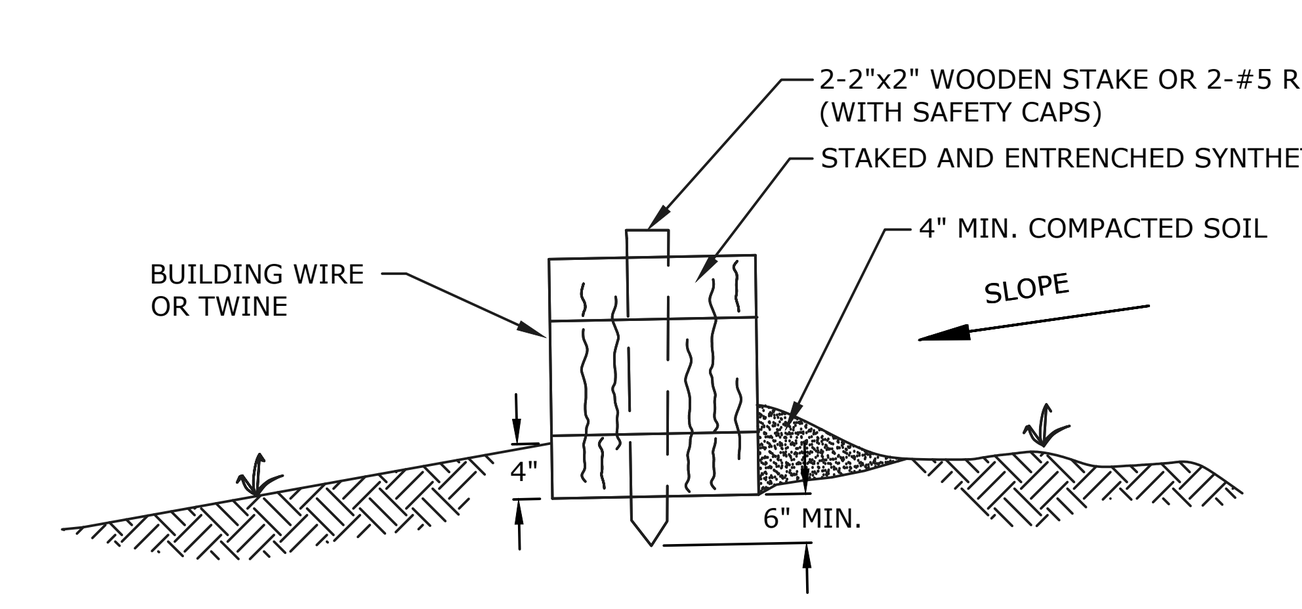

SYNTHETIC BALE BARRIER CONSTRUCTION

BALES SHALL BE PLACED IN A SINGLE ROW, LENGTHWISE, WITH ENDS OF ADJACENT BALES TIGHTLY ABUTTING ONE ANOTHER. ALL BALES SHALL BE SECURELY ANCHORED BY AT LEAST TWO STAKES OR REBARS DRIVEN THROUGH THE BALE. THE FIRST STAKE IN EACH BALE SHALL BE DRIVEN TOWARD THE PREVIOUSLY LAID BALE TO FORCE THE BALES TOGETHER. CONTRACTOR SHALL WEDGE OR CHINK LOOSE STRAW BETWEEN BALES. INSPECTION SHALL BE FREQUENT AND REPAIR OR REPLACEMENT SHALL BE MADE AS PROMPTLY AS NEEDED. SYNTHETIC BALE BARRIERS SHALL BE REMOVED AFTER THEY HAVE SERVED THEIR USEFULNESS, BUT NOT BEFORE THE UPSLOPE AREAS HAVE BEEN PERMANENTLY STABILIZED. SYNTHETIC BALE BARRIERS SHALL BE INSPECTED IMMEDIATELY AFTER EACH RAINFALL AND AT LEAST DAILY DURING PROLONGED RAINFALL. CLOSE ATTENTION SHALL BE PAID TO THE REPAIR OF DAMAGED BALES, END RUNS AND UNDERCUTTING BENEATH BALES.

SYNTHETIC HAY BALE DETAIL

NOT TO SCALE

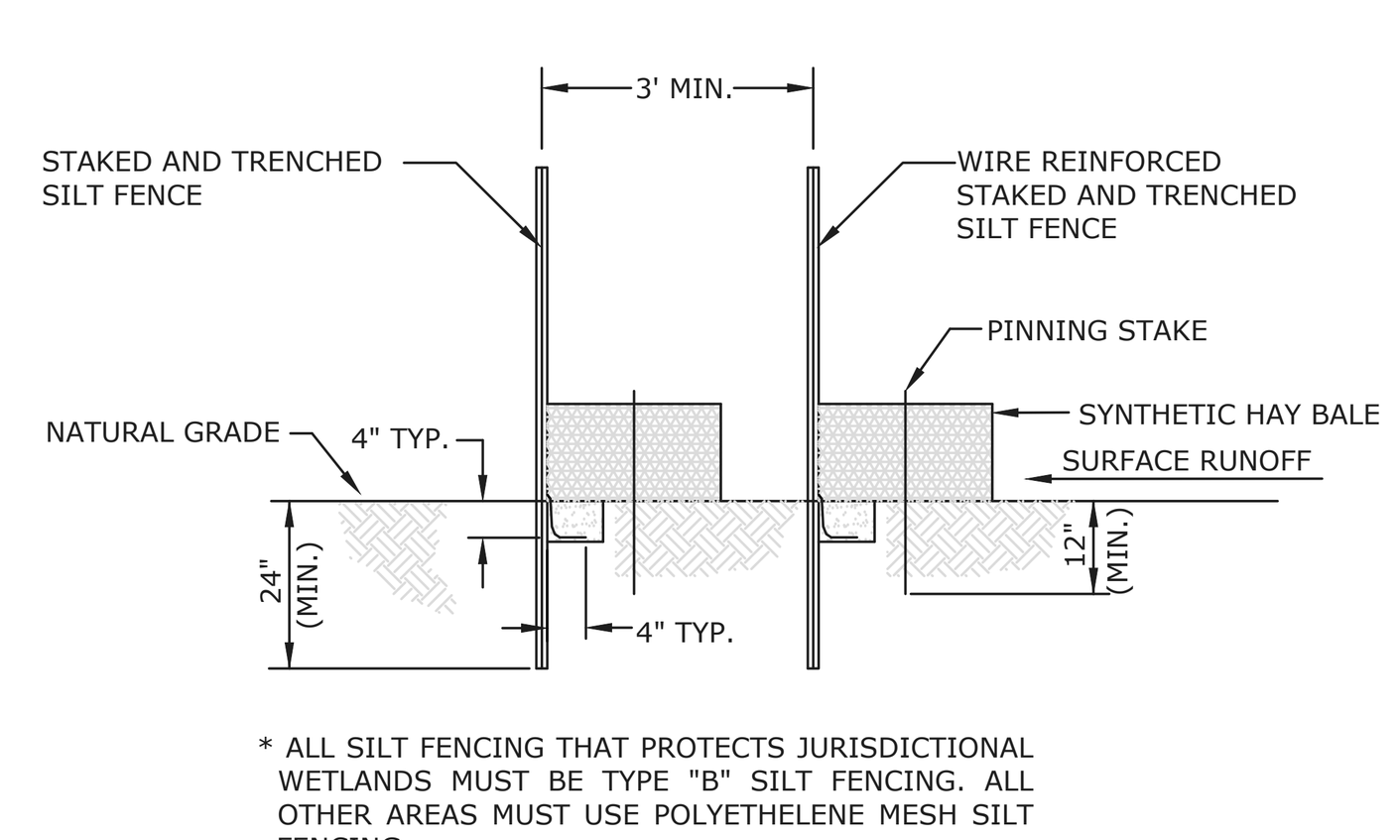

* ALL SILT FENCING THAT PROTECTS JURISDICTIONAL WETLANDS MUST BE TYPE "B" SILT FENCING. ALL OTHER AREAS MUST USE POLYETHELENE MESH SILT FENCING.

DOUBLE ROW STAKED SILT FENCE DETAIL

NOT TO SCALE

EROSION AND SEDIMENT CONTROL NOTES:

1. FOR ALL PROJECTS WHICH DISTURB MORE THAN ONE ACRE OF AREA, THE CONTRACTOR IS WHOLLY RESPONSIBLE FOR PREPARING, SUBMITTING, AND ACQUIRING THE FDEP/NPDES PERMIT, INCLUDING THE REQUIRED STORMWATER POLLUTION PREVENTION PLAN (SWPPP). THE CONTRACTOR SHALL SUBMIT A NOTICE OF INTENT TO FDEP NO LESS THAN 48 HOURS PRIOR TO THE COMMENCEMENT OF CONSTRUCTION ACTIVITIES. THE CONTRACTOR IS ALSO RESPONSIBLE FOR ENSURING THAT THE PROJECT COMPLIES WITH THE PERMIT CONDITIONS (INCLUDING THE REQUIRED NPDES INSPECTIONS AND DOCUMENTATION) AND APPLICABLE LOCAL, STATE, AND FEDERAL WATER QUALITY STANDARDS DURING CONSTRUCTION. THE CONSTRUCTION DOCUMENTS CONTAIN ONLY THE MINIMUM REQUIREMENTS FOR EROSION AND SEDIMENT CONTROL. ANY AND ALL COSTS ASSOCIATED WITH OBTAINING THE NPDES PERMIT OR COMPLYING WITH THE PERMIT REQUIREMENTS SHALL BE BORNE BY THE CONTRACTOR.
2. WHEN REQUIRED, THE CONTRACTOR SHALL DEVELOP AND IMPLEMENT A SWPPP ACCORDING TO EPA/FDEP CRITERIA TO MINIMIZE EROSION AND ENSURE PROPER FUNCTIONING OF THE STORMWATER MANAGEMENT SYSTEM UPON COMPLETION OF CONSTRUCTION. IN ADDITION TO MEETING EPA/FDEP NPDES CRITERIA, THE SWPPP SHALL BE SUBMITTED TO AND COMPLY WITH ANY REQUIREMENTS OF THE LOCAL AGENCY HAVING JURISDICTION. A COPY OF THE APPROVED STORMWATER POLLUTION PREVENTION PLAN (SWPPP) SHALL BE KEPT ON SITE AT ALL TIMES FOR REVIEW AS MAY BE REQUIRED.
3. THE CONTRACTOR SHALL COMPLY WITH ALL FEDERAL, STATE, AND LOCAL LAWS AND ALL REGULATIONS CONTROLLING POLLUTION OF THE ENVIRONMENT.
4. CONTRACTOR SHALL EXECUTE ALL MEASURES AND IMPLEMENT ALL BEST MANAGEMENT PRACTICES NECESSARY TO LIMIT THE TRANSPORTATION OF SEDIMENTS OUTSIDE THE LIMITS OF THE PROJECT. THE EROSION CONTROL MEASURES SHALL BE INSTALLED PRIOR TO THE START OF CONSTRUCTION AND MUST REMAIN IN SATISFACTORY OPERATION UNTIL THE PROJECT IS FULLY COMPLETED AND ACCEPTED AND UNTIL THE PERMANENT EROSION CONTROL MEASURES ARE ESTABLISHED AND CAPABLE OF PROVIDING EROSION AND SILTATION CONTROL. CONTRACTOR SHALL PROVIDE ROUTINE MAINTENANCE ON TEMPORARY EROSION CONTROL MEASURES AT HIS EXPENSE. CONTRACTOR SHALL CONTINUALLY MONITOR WEATHER AND SITE CONDITIONS AND SHALL PROVIDE CONTINUOUS MONITORING OF EROSION AND SEDIMENT CONTROLS AND SHALL DOCUMENT ALL CORRECTIVE MEASURES.
5. INLETS AND CATCH BASINS SHALL BE PROTECTED FROM SEDIMENTATION RESULTING FROM SURFACE RUNOFF UNTIL COMPLETION OF ALL CONSTRUCTION OPERATIONS THAT MAY CAUSE SEDIMENT TO RUNOFF. FILTER FABRIC SHALL BE PLACED AND MAINTAINED UNDER THE GRATE AND FILTER SOCKS SHALL BE PLACED IN FRONT OF THE THROAT OF CURB INLETS, DURING CONSTRUCTION AND SHALL BE MAINTAINED FOR THE DURATION OF THE PROJECT CONSTRUCTION.
6. ALL DISTURBED AREAS WHICH ARE NOT PAVED SHALL BE SEEDED, FERTILIZED AND MULCHED, HYDROSEEDED, OR SODDED AS REQUIRED, UNLESS NOTED OTHERWISE. SOD PINS SHALL BE USED FOR ALL SOD PLACED ON SLOPES STEEPER THAN 3:1. AREAS OF ESTABLISHED SOD OR GROUND COVER SHALL BE REPLACED IN KIND TO MATCH THE EXISTING CONDITIONS PRIOR TO CONSTRUCTION COMMENCEMENT.
7. PERMANENT GRASSING SHALL BE INSTALLED AND MAINTAINED ON ALL EXPOSED SLOPES AND DISTURBED AREAS WITHIN 48 HOURS OF COMPLETING FINAL GRADING, AND AT ANY OTHER TIME AS NECESSARY, TO PREVENT EROSION, SEDIMENTATION, OR TURBID DISCHARGES. A VEGETATIVE COVER THAT STABILIZES AND PREVENTS EROSION SHALL BE ESTABLISHED WITHIN 60 DAYS OF PERMANENT GRASSING INSTALLATION. UPON ESTABLISHMENT OF A SUBSTANTIAL VEGETATIVE COVER, ALL TURBIDITY BARRIERS AND EROSION CONTROL MEASURES SHALL BE REMOVED.
8. ALL EROSION AND SEDIMENT CONTROLS SHALL BE CONSISTENT WITH PERFORMANCE STANDARDS FOR EROSION AND SEDIMENT CONTROL AND STORMWATER TREATMENT SET FORTH IN SECTION 62-40.432, OF THE FLORIDA ADMINISTRATIVE CODE, AS WELL AS THE APPLICABLE STORMWATER OR ENVIRONMENTAL RESOURCE PERMITTING REQUIREMENTS OF FDEP, THE APPLICABLE WATER MANAGEMENT DISTRICT, THE US ENVIRONMENTAL PROTECTION AGENCY AND THE GUIDELINES CONTAINED IN THE STATE OF FLORIDA EROSION AND SEDIMENT CONTROL DESIGNER AND REVIEWER MANUAL (LATEST VERSION).
9. TEMPORARY SEDIMENT CONTROL MEASURES INCLUDE, BUT ARE NOT LIMITED TO: SILT FENCING; CONSTRUCTION OF SEDIMENT CHECK DAMS; CONSTRUCTION EXITS, FLOATING TURBIDITY CURTAINS, FILTER SOCKS; SEEDING AND MULCHING, ETC. PERMANENT SEDIMENT CONTROL MEASURES INCLUDE BUT ARE NOT LIMITED TO: PERMANENT GRASSING; EROSION BLANKETS; RIP RAP, ETC. MINIMUM STABILIZATION MEASURES ARE DETAILED ON THE CONSTRUCTION PLANS. THE CONTRACTOR SHALL INCLUDE ANY AND ALL MEASURES NECESSARY TO STABILIZE THE SITE, CONTROL EROSION, AND PREVENT SEDIMENT FROM ESCAPING THE SITE. THE CONTROL OF EROSION ON THE SITE COMPLY WITH ALL APPLICABLE LOCAL, STATE, AND FEDERAL REGULATIONS.
10. CONSTRUCTION OPERATIONS SHALL BE SCHEDULED AND PERFORMED SO THAT PREVENTATIVE EROSION CONTROL MEASURES ARE IN PLACE PRIOR TO EXCAVATION. TEMPORARY STABILIZATION MEASURES SHALL BE IN PLACE IMMEDIATELY FOLLOWING CLEARING, BACKFILLING AND/OR GRADING OPERATIONS.
11. SPECIAL PRECAUTIONS WILL BE TAKEN IN THE USE OF CONSTRUCTION EQUIPMENT TO PREVENT SITUATIONS THAT PROMOTE EROSION.
12. CLEANUP WILL BE DONE IN A MANNER TO INSURE THAT EROSION CONTROL MEASURES ARE NOT DISTURBED.
13. THE PROJECT WILL BE CONTINUALLY INSPECTED FOR SOIL EROSION AND SEDIMENT CONTROL COMPLIANCE. DEFICIENCIES WILL BE CORRECTED BY THE CONTRACTOR WITHIN 24 HOURS.
14. TEMPORARY EROSION CONTROL MEASURES SHALL BE COMPLETELY REMOVED BY THE CONTRACTOR UPON ESTABLISHMENT OF PERMANENT CONTROL MEASURES OR WHEN DIRECTED BY THE OWNER.
15. THE CONTRACTOR SHALL RESTORE ALL DISTURBED RIGHTS-OF-WAY IN ACCORDANCE WITH THE LATEST EDITION OF THE FLORIDA DEPARTMENT OF TRANSPORTATION STANDARD SPECIFICATIONS, OR THE REQUIREMENTS OF THE LOCAL AGENCY HAVING JURISDICTION (AHJ).
16. THE CONTRACTOR SHALL COMPLETE SITE RESTORATION AS THE PROJECT PROGRESSES.
17. THE CONTRACTOR SHALL INSTALL PRIOR TO THE START OF CONSTRUCTION AND MAINTAIN DURING CONSTRUCTION ALL SEDIMENT CONTROL MEASURES AS REQUIRED TO RETAIN ALL SEDIMENTS ON SITE. IMPROPER SEDIMENT CONTROL MEASURES MAY RESULT IN A CODE ENFORCEMENT VIOLATION.
18. THE CONTRACTOR IS RESPONSIBLE FOR PREVENTING TRACKING OF SOIL FROM THE SITE ONTO ADJACENT ROADWAYS. IN ADDITION TO THE INSTALLATION OF A CONSTRUCTION EXIT THE CONTRACTOR WILL BE RESPONSIBLE FOR SWEEPING ROADWAYS AS REQUIRED.
19. CONTRACTOR SHALL TAKE ALL MEASURES NECESSARY TO CONTROL TURBIDITY IN SURROUNDING WATERS INCLUDING, BUT NOT LIMITED TO, THE INSTALLATION OF TURBIDITY BARRIERS AT ALL LOCATIONS WHERE THE POSSIBILITY OF TRANSFERRING SUSPENDED SOLIDS INTO THE RECEIVING BODY OF WATER EXISTS DUE TO THE PROPOSED WORK. TURBIDITY BARRIERS MUST BE MAINTAINED AT ALL LOCATIONS UNTIL CONSTRUCTION IS COMPLETED AND DISTURBED SOIL AREAS ARE STABILIZED. THE CONTRACTOR SHALL ALSO BE RESPONSIBLE FOR REMOVING THE BARRIERS AND ANY ACCUMULATED SILT AT THE COMPLETION OF CONSTRUCTION AND PERMANENT STABILIZATION. AT NO TIME SHALL THERE BE ANY OFF-SITE DISCHARGE WHICH VIOLATES THE WATER QUALITY STANDARDS OF THE FLORIDA ADMINISTRATIVE CODE.
20. THE CONTRACTOR IS RESPONSIBLE FOR THE CONTROL OF DUST AND OTHER AIRBORNE POLLUTANTS DURING CONSTRUCTION. DUST SHALL BE CONTROLLED BY WATERING OR OTHER APPROVED METHODS AT THE CONTRACTOR'S DISCRETION.

ARCHITECTURE + ENGINEERING
License No. 26002939 License No. 30900
1230 Oakley Seaver Drive, Suite 200 - Clermont, FL 34711
P: 888-850-FFAE (3323)
www.forefrontae.com
FOREFRONT
Service Beyond Design
Dale E. Long, P.E.
P.E. #55393

EROSION & SEDIMENT CONTROL NOTES AND DETAILS

PAXTON AGING FACILITY
22174 US HWY 331 N, PAXTON, FL 32567
WALTON COUNTY FLORIDA

MUNICIPAL ENGINEERING SERVICES INC
8574 Turkey Bluff Road ◇ Navarre, Florida 32566 ◇ p: (850) 939-5732
CERTIFICATE OF AUTHORIZATION: CA-30886

REVISIONS

ANY DISCREPANCY OR ERROR IN DIMENSIONS OR NOTES SHALL BE BROUGHT TO THE ATTENTION OF THE DESIGN PROFESSIONAL FOR CLARIFICATION PRIOR TO COMMENCEMENT OF CONSTRUCTION.

JOB #: 230001
DATE: AUGUST 2023

C-002

© FOREFRONT ARCHITECTURE & ENGINEERING LLC 2014 THIS DOCUMENT AND/OR THE DESIGN CONCEPTS EXPRESSED HEREIN ARE THE PROPERTY OF FOREFRONT ARCHITECTURE & ENGINEERING LLC AND ALL RIGHTS OF OWNERSHIP, INCLUDING COPYRIGHT OF INTELLECTUAL PROPERTY, ARE RESERVED. ANY REPRODUCTIONS, COPYING, OR USE OF THIS DOCUMENT AND/OR THE DESIGN CONCEPT WITHOUT THE WRITTEN CONSENT OF FOREFRONT ARCHITECTURE & ENGINEERING LLC IS STRICTLY PROHIBITED AND PROTECTED BY UNITED STATES AND INTERNATIONAL LAW. IF PRINTED ON 11X17 SCALE IS HALF THE SIZE NOTED.



F.D.O.T. NOTES:

1. ALL WORK IN THE RIGHT-OF-WAY SHALL BE DONE IN ACCORDANCE WITH THE CURRENT EDITION OF THE FDOT STANDARD PLANS FOR ROADWAY CONSTRUCTION, FDOT STANDARD SPECIFICATIONS FOR ROAD & BRIDGE CONSTRUCTION, FLORIDA DESIGN MANUAL, FLORIDA GREENBOOK, AND THE MANUAL ON UNIFORM TRAFFIC CONTROL DEVICES (MUTCD).
2. ALL LANES MUST BE OPENED TO TRAFFIC WITHIN 12 HOURS AFTER RECEIVING NOTIFICATION OF A HURRICANE EVACUATION OR ANY OTHER CATASTROPHIC EVENT AND SHALL REMAIN OPEN FOR THE DURATION OF THE EVACUATION OR EVENT AS DIRECTED BY THE PERMITS MANAGER.
3. ENGINEER SHALL SCHEDULE AND HAVE AN ON-SITE PRE-WORK MEETING WITH REPRESENTATIVES FROM THE ENGINEERING FIRM, FDOT, QUALITY CONTROL TESTING LABORATORY, PRIME CONTRACTOR, AND ANY OTHER INTERESTED PARTY PRESENT
4. PAVING CONTRACTOR SHALL SCHEDULE A PRE-PAVING MEETING WITH FDOT. PROPOSED ASPHALT MIX DESIGNS SHALL BE SUBMITTED FOR APPROVAL PRIOR TO OR AT THE PRE-PAVING MEETING.
5. CONTRACTOR MUST SUBMIT A QUALITY CONTROL PLAN FOR FDOT REVIEW AND APPROVAL BEFORE OR AT THE REQUIRED PRE-WORK MEETING. QUALITY CONTROL TESTING SHALL BE PERFORMED BY FDOT CERTIFIED TECHNICIANS AND TESTING LABORATORY. ALL TEST RESULTS SHALL BE PROVIDED TO FDOT AS SOON AS PRACTICAL.
6. SOD AREAS WITHIN 32" OF EDGE OF PAVEMENT & SLOPES GREATER THAN 1:3. OTHER DISTURBED AREAS MAY BE REPAIRED BY SEEDING OR HYDRO-SEEDING. SEE FDOT STANDARD PLANS INDEX 570-010 AND SECTION 570 OF THE FDOT STANDARD SPECIFICATIONS FOR ROAD & BRIDGE CONSTRUCTION.
7. ALL STRIPING WITHIN FDOT RIGHT OF WAY SHALL BE THERMOPLASTIC AND ADHERE TO FDOT STANDARD PLANS INDEX 711-001 AND SECTION 711 OF THE FDOT STANDARD SPECIFICATIONS FOR ROAD & BRIDGE CONSTRUCTION". STANDARD SPEC 711-4.1 STATES; "WAIT AT LEAST 14 DAYS AFTER CONSTRUCTING THE FINAL ASPHALT SURFACE COURSE TO PLACE THERMOPLASTIC PAVEMENT MARKINGS. INSTALLATION OF THERMOPLASTIC ON CONCRETE REQUIRES A CLEAN, DRY SURFACE. FOLLOW THE MANUFACTURER'S RECOMMENDATIONS FOR SURFACE PREPARATION FOR THERMOPLASTIC ON CONCRETE. PROVIDE TEMPORARY PAVEMENT MARKINGS DURING THE INTERIM PERIOD PRIOR TO OPENING THE ROAD TO
8. APPLY OR RECAP STANDARD THERMOPLASTIC PAVEMENT MARKINGS FOR LONGITUDINAL LINES TO ATTAIN A MINIMUM THICKNESS OF 0.10 INCH OR 100 MILS AND A MAXIMUM THICKNESS 0.15 INCH OR 150 MILS WHEN MEASURED ABOVE THE PAVEMENT SURFACE. MARKINGS OTHER THAN LONGITUDINAL LINES, WHEREVER LOCATED, WILL HAVE A THICKNESS OF 0.09 INCH OR 90 MILS TO 0.12 INCH OR 120 MILS WHEN MEASURED ABOVE THE PAVEMENT SURFACE.
9. ALL LANE AND SHOULDER CLOSURES MUST BE REQUESTED IN WRITING AND APPROVED A MINIMUM OF 48 HOURS PRIOR TO WORK STARTING. ALLOW UP TO 2 WEEKS FOR LANE CLOSURE APPROVAL PROCESS." CONTACT LOCAL PERMIT'S OFFICE FOR MORE DETAILS AT 850-836-5790 OR 850-836-5742.
10. IT IS THE CONTRACTOR'S RESPONSIBILITY TO PLACE SIDE-DRAIN PIPES AT PROPER ELEVATIONS TO MATCH THE FLOWLINE OF THE DRAINAGE DITCH (NOT SEDIMENT BUILD-UP) TO ENSURE POSITIVE STORMWATER FLOW

GRAPHIC SCALE:

60 30 0 60 120 180

SCALE IN FEET SCALE: 1" = 60'

ARCHITECTURE + ENGINEERING
License No. 30900
1230 Oakley Seaver Drive, Suite 200 - Clermont, FL 34711
P: 888-850-FFAE (3323)
www.forefrontae.com
FOREFRONT
Service Beyond Design
Dale E. Long, P.E.
P.E. #55393

F.D.O.T. 660' AERIAL

PAXTON AGING FACILITY
22174 US HWY 331 N, PAXTON, FL 32567
WALTON COUNTY FLORIDA

MUNICIPAL ENGINEERING SERVICES INC
8874 Thurber Bluff Road - Navarre, Florida 32566 - P: (850) 939-9732
CERTIFICATE OF AUTHORIZATION #: CA-C30566

REVISIONS

ANY DISCREPANCY OR ERROR IN DIMENSIONS OR NOTES SHALL BE BROUGHT TO THE ATTENTION OF THE ENGINEER PRIOR TO THE CLASSIFICATION PRIOR TO THE COMMENCEMENT OF CONSTRUCTION.

JOB #: 23001
DATE: AUGUST 2023

C-100

R:\PROJ\2023\23001 Paxton Senior Center\DWG\Sheets\15 660 FDOT Survey; Plot Date: Saturday, December 30, 2023,4:07:49 PM; Plotted By: mdorman

© FOREFRONT ARCHITECTURE & ENGINEERING LLC 2014 THIS DOCUMENT AND/OR THE DESIGN CONCEPTS EXPRESSED HEREIN ARE THE PROPERTY OF FOREFRONT ARCHITECTURE & ENGINEERING LLC AND ALL RIGHTS OF OWNERSHIP, INCLUDING COPYRIGHT OF INTELLECTUAL PROPERTY, ARE RESERVED. ANY REPRODUCTIONS, COPYING, OR USE OF THIS DOCUMENT AND/OR THE DESIGN CONCEPT WITHOUT THE WRITTEN CONSENT OF FOREFRONT ARCHITECTURE & ENGINEERING LLC IS STRICTLY PROHIBITED AND PROTECTED BY UNITED STATES AND INTERNATIONAL LAW. IF PRINTED ON 11X17 SCALE IS HALF THE SIZE NOTED.

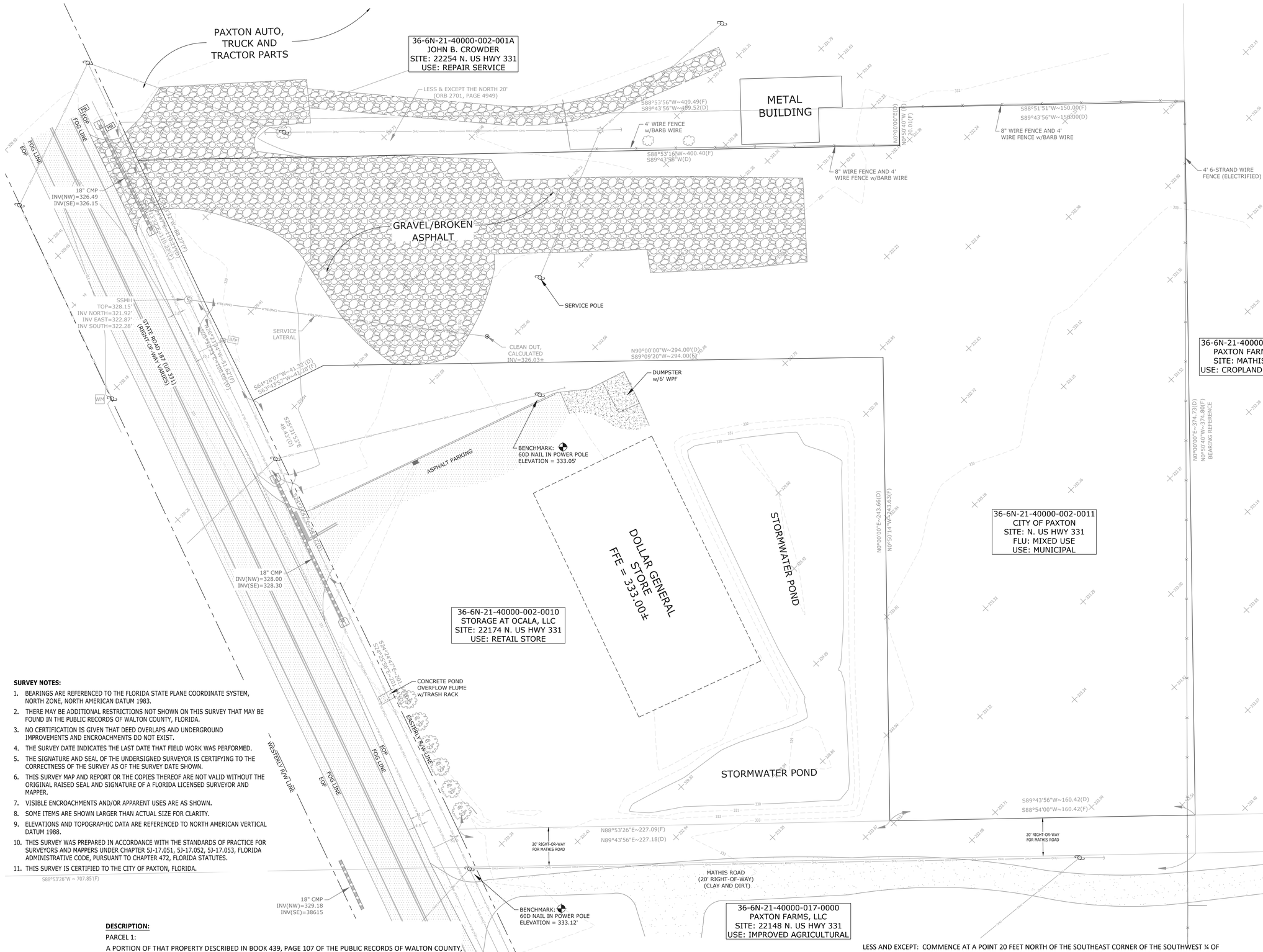

SURVEY NOTES:

1. BEARINGS ARE REFERENCED TO THE FLORIDA STATE PLANE COORDINATE SYSTEM, NORTH ZONE, NORTH AMERICAN DATUM 1983.
2. THERE MAY BE ADDITIONAL RESTRICTIONS NOT SHOWN ON THIS SURVEY THAT MAY BE FOUND IN THE PUBLIC RECORDS OF WALTON COUNTY, FLORIDA.
3. NO CERTIFICATION IS GIVEN THAT DEED OVERLAPS AND UNDERGROUND IMPROVEMENTS AND ENCROACHMENTS DO NOT EXIST.
4. THE SURVEY DATE INDICATES THE LAST DATE THAT FIELD WORK WAS PERFORMED.
5. THE SIGNATURE AND SEAL OF THE UNDERSIGNED SURVEYOR IS CERTIFYING TO THE CORRECTNESS OF THE SURVEY AS OF THE SURVEY DATE SHOWN.
6. THIS SURVEY MAP AND REPORT OR THE COPIES THEREOF ARE NOT VALID WITHOUT THE ORIGINAL RAISED SEAL AND SIGNATURE OF A FLORIDA LICENSED SURVEYOR AND MAPPER.
7. VISIBLE ENCROACHMENTS AND/OR APPARENT USES ARE AS SHOWN.
8. SOME ITEMS ARE SHOWN LARGER THAN ACTUAL SIZE FOR CLARITY.
9. ELEVATIONS AND TOPOGRAPHIC DATA ARE REFERENCED TO NORTH AMERICAN VERTICAL DATUM 1988.
10. THIS SURVEY WAS PREPARED IN ACCORDANCE WITH THE STANDARDS OF PRACTICE FOR SURVEYORS AND MAPPERS UNDER CHAPTER 5J-17.051, 5J-17.052, 5J-17.053, FLORIDA ADMINISTRATIVE CODE, PURSUANT TO CHAPTER 472, FLORIDA STATUTES.
11. THIS SURVEY IS CERTIFIED TO THE CITY OF PAXTON, FLORIDA.

DESCRIPTION:

PARCEL 1:

A PORTION OF THAT PROPERTY DESCRIBED IN BOOK 439, PAGE 107 OF THE PUBLIC RECORDS OF WALTON COUNTY, FLORIDA, AND BEING MORE PARTICULARLY DESCRIBED AS FOLLOWS: COMMENCE AT A POINT 20 FEET NORTH OF THE SOUTHEAST CORNER OF THE SOUTHWEST ¼ OF SOUTHWEST ¼ OF THE NORTHWEST ¼ OF SECTION 36, TOWNSHIP 6 NORTH, RANGE 21 WEST, WALTON COUNTY, FLORIDA; RUN NORTH 00° 00' 00" EAST A DISTANCE OF 374.73 FEET; THENCE GO SOUTH 89° 43' 56" WEST A DISTANCE OF 150.00 FEET TO THE POINT OF BEGINNING; THENCE CONTINUE SOUTH 89° 43' 56" WEST A DISTANCE OF 409.52 FEET TO A POINT ON THE EASTERLY RIGHT OF WAY LINE OF STATE ROAD NO. 187 (R/W VARIES); THENCE GO SOUTH 24° 24' 47" EAST ALONG SAID EASTERLY RIGHT OF WAY LINE A DISTANCE OF 110.21 FEET; THENCE GO SOUTH 25° 33' 32" EAST ALONG SAID EASTERLY RIGHT OF WAY LINE A DISTANCE OF 100.02 FEET; THENCE GO SOUTH 24° 24' 47" EAST ALONG SAID EASTERLY RIGHT OF WAY LINE A DISTANCE OF 58.87 FEET; THENCE DEPARTING SAID EASTERLY RIGHT OF WAY LINE GO NORTH 89° 43' 56" EAST A DISTANCE OF 296.48 FEET; THENCE GO NORTH 00° 00' 00" EAST A DISTANCE OF 244.73 FEET TO THE POINT OF BEGINNING. LESS AND EXCEPT THE NORTH 20 FEET THEREOF AS CONVEYED IN OFFICIAL RECORDS BOOK 2701, PAGE 4949, OF THE PUBLIC RECORDS OF WALTON COUNTY, FLORIDA.

PARCEL 2:

A PORTION OF THAT PROPERTY DESCRIBED IN OFFICIAL RECORDS BOOK 439, PAGE 107 OF THE PUBLIC RECORDS OF WALTON COUNTY, FLORIDA, AND BEING MORE PARTICULARLY DESCRIBED AS FOLLOWS: BEGINNING AT A POINT 20 FEET NORTH OF THE SOUTHEAST CORNER OF THE SOUTHWEST ¼ OF SOUTHWEST ¼ OF THE NORTHWEST ¼ OF SECTION 36, TOWNSHIP 6 NORTH, RANGE 21 WEST, WALTON COUNTY, FLORIDA, RUN NORTH 00° 00' 00" EAST A DISTANCE OF 374.73 FEET; THENCE GO SOUTH 89° 43' 56" WEST A DISTANCE OF 150.00 FEET; THENCE GO SOUTH 00° 00' 00" WEST A DISTANCE OF 244.73 FEET; THENCE GO SOUTH 89° 43' 56" WEST A DISTANCE OF 296.48 FEET TO A POINT ON THE EASTERLY RIGHT OF WAY LINE OF STATE ROAD NO. 187 (R/W VARIES); THENCE GO SOUTH 24° 24' 47" EAST ALONG SAID EASTERLY RIGHT OF WAY LINE A DISTANCE OF 201.34 FEET; THENCE DEPARTING SAID EASTERLY RIGHT OF WAY LINE GO NORTH 89° 43' 56" EAST A DISTANCE OF 387.60 FEET TO THE POINT OF BEGINNING.

LESS AND EXCEPT: COMMENCE AT A POINT 20 FEET NORTH OF THE SOUTHEAST CORNER OF THE SOUTHWEST ¼ OF THE SOUTHWEST ¼ OF THE NORTHWEST ¼ OF SECTION 36, TOWNSHIP 6 NORTH, RANGE 21 WEST, WALTON COUNTY, FLORIDA, SAID POINT ALSO BEING ON THE APPARENT NORTH RIGHT OF WAY LINE OF MATHIS ROAD; THENCE GO ALONG SAID RIGHT OF WAY SOUTH 89° 43' 56" WEST A DISTANCE OF 160.42 FEET TO THE POINT OF BEGINNING; THENCE DEPARTING SAID RIGHT OF WAY GO NORTH 00° 00' 00" EAST A DISTANCE OF 243.66 FEET; THENCE NORTH 90° 00' 00" WEST A DISTANCE OF 294.00 FEET; THENCE SOUTH 64° 28' 07" WEST A DISTANCE OF 41.32 FEET TO A POINT INTERSECTING THE EASTERLY RIGHT OF WAY LINE OF STATE ROAD NO. 187 (U.S. HIGHWAY 331, R/W VARIES); THENCE GO ALONG SAID EASTERLY RIGHT OF WAY LINE SOUTH 25° 31' 53" EAST A DISTANCE OF 48.43 FEET; THENCE SOUTH 24° 25' 56" EAST A DISTANCE OF 201.24 FEET TO A POINT INTERSECTING THE EASTERLY RIGHT OF WAY LINE OF STATE ROAD NO. 187 (U.S. HIGHWAY 331, R/W/ VARIES) AND THE APPARENT NORTH RIGHT OF WAY LINE OF MATHIS ROAD; THENCE DEPARTING SAID EASTERLY RIGHT OF WAY LINE OF STATE ROAD NO. 187, GO NORTH 89° 43' 56" EAST ALONG THE AFORESAID APPARENT NORTH RIGHT OF WAY LINE OF MATHIS ROAD A DISTANCE OF 227.18 FEET TO THE POINT OF BEGINNING.

GRAPHIC SCALE:

20 10 0 20 40 60

SCALE IN FEET SCALE: 1" = 20'

FOREFRONT ARCHITECTURE + ENGINEERING
License No. 30000
1230 Oakley Seaver Drive, Suite 200 - Clermont, FL 34711
P: 888-850-FFAE (3323)
www.forefrontae.com
Service Beyond Design
Dale E. Long, P.E.
P.E. #55393

EXISTING CONDITIONS

PAXTON AGING FACILITY
22174 US HWY 331 N, PAXTON, FL 32567
WALTON COUNTY FLORIDA

MUNICIPAL ENGINEERING SERVICES INC
8974 Turkey Bluff Road - Navarre, Florida 32566 - P: (850) 939-8732
CERTIFICATE OF AUTHORIZATION C.A. #30068

REVISIONS

ANY DISCREPANCY OR ERROR IN DIMENSIONS OR NOTES SHALL BE BROUGHT TO THE ATTENTION OF THE DESIGN PROFESSIONAL FOR CLARIFICATION PRIOR TO COMMENCEMENT OF CONSTRUCTION.

JOB #: 23001
DATE: AUGUST 2023

C-101

X:\MES\2023\23001 Paxton Senior Center\DWG\Sheets\20 Existing Conditions; Plot Date: Thursday, August 24, 2023,4:06:06 PM; Plotted By: mdorman

© FOREFRONT ARCHITECTURE & ENGINEERING LLC 2014 THIS DOCUMENT AND/OR THE DESIGN CONCEPTS EXPRESSED HEREIN ARE THE PROPERTY OF FOREFRONT ARCHITECTURE & ENGINEERING LLC AND ALL RIGHTS OF OWNERSHIP, INCLUDING COPYRIGHT OF INTELLECTUAL PROPERTY, ARE RESERVED. ANY REPRODUCTIONS, COPYING, OR USE OF THIS DOCUMENT AND/OR THE DESIGN CONCEPT WITHOUT THE WRITTEN CONSENT OF FOREFRONT ARCHITECTURE & ENGINEERING LLC IS STRICTLY PROHIBITED AND PROTECTED BY UNITED STATES AND INTERNATIONAL LAW. IF PRINTED ON 11X17 SCALE IS HALF THE SIZE NOTED.

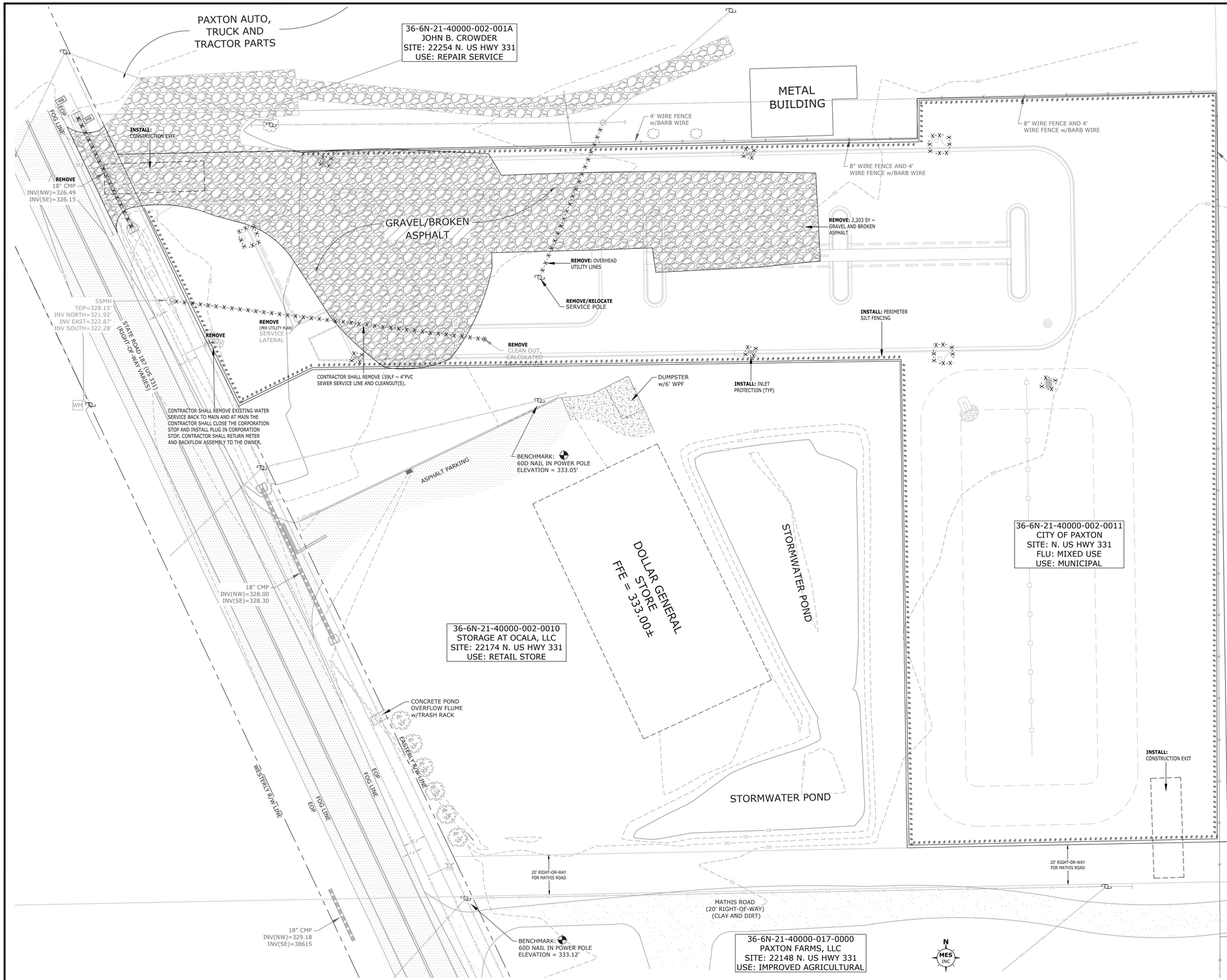

GRAPHIC SCALE:

20 10 0 20 40 60

SCALE IN FEET SCALE: 1" = 20'

DEMOLITION AND CLEARING NOTES:

1. NO PROTECTED TREES WILL BE REMOVED AS PART OF THIS PROJECT.
2. TREES SLATED FOR PROTECTION SHALL BE MARKED AND TREE PROTECTION BARRICADES SHALL BE INSTALLED PRIOR TO THE COMMENCEMENT OF ANY LAND DISTURBING ACTIVITIES. NO PROTECTED TREES SHALL BE REMOVED, DESTRUCTIVELY DAMAGED, MUTILATED, RELOCATED, DISFIGURED, DESTROYED, CUT DOWN OR EXCESSIVELY PRUNED DURING CONSTRUCTION ACTIVITIES.
3. NO GRADING OR CLEARING BY, OR STORAGE OF HEAVY EQUIPMENT SHALL OCCUR WITHIN THE DRIP LINE OF PROTECTED TREES OR WITHIN ENVIRONMENTALLY SENSITIVE AREAS.
4. TREE PROTECTION BARRICADES OR EQUIVALENT PROTECTIVE MEASURES WILL BE CONSTRUCTED ACCORDING TO THE LOCAL JURISDICTION'S CRITERIA FOR TREES TO REMAIN WITHIN THE LIMITS OF CONSTRUCTION.
5. CONTRACTOR SHALL TAKE EXTREME CARE TO REMOVE ONLY TREES AND VEGETATION ABSOLUTELY NECESSARY FOR THE CONSTRUCTION OF THIS WORK.
6. ALL TREE PROTECTION MEASURES AND BARRICADES SHALL BE INSTALLED AROUND EACH PROTECTED TREE SHOWN TO REMAIN ON SITE AND PRIOR TO ANY SITE DISTURBANCE. TREE PROTECTION MEASURES SHALL BE MAINTAINED IN GOOD WORKING ORDER UNTIL PROJECT IS COMPLETE AND THE SITE IS STABILIZED.
7. THE CONTRACTOR SHALL BE EXTREMELY CAUTIOUS WHEN WORKING NEAR TREES THAT ARE TO BE SAVED, WHETHER SHOWN ON THE PLANS OR DESIGNATED IN THE FIELD
8. ALL PRACTICAL AND NECESSARY EFFORT SHALL BE TAKEN DURING CONSTRUCTION TO PREVENT UNNECESSARY TREE REMOVAL.
9. TRENCHING FOR PROPOSED UTILITY IMPROVEMENTS WITHIN THE DRIP LINE OF SPECIMEN TREES TO REMAIN, WILL REQUIRE THE ADVANCED PRE-TREATMENT OF EACH IMPACTED TREE BY A QUALIFIED ARBORIST OR THE LANDSCAPE ARCHITECT TO MINIMIZE THE POTENTIALLY ADVERSE IMPACTS OF CONSTRUCTION. HAND DIGGING MAY BE REQUIRED WITHIN THE DRIP LINE OF PROTECTED TREES.
10. IN AREAS REQUIRING FILL MATERIAL, THE CONTRACTOR SHALL STRIP OR OTHERWISE REMOVE ALL VEGETATION SUCH AS BRUSH, HEAVY SOD, HEAVY GROWTH OF GRASS, DECAYED VEGETATION MATTER, RUBBISH AND ANY OTHER DELETERIOUS MATERIAL BEFORE EMBANKMENT IS PLACED. IMMEDIATELY PRIOR TO THE PLACING OF FILL MATERIAL, THE ENTIRE AREA UPON WHICH FILL IS TO BE PLACED, SHALL BE SCARIFIED IN A DIRECTION APPROXIMATELY PARALLEL TO THE AXIS OF FILL. THE GEOTECHNICAL ENGINEER SHALL APPROVE THE AREA PRIOR TO THE PLACEMENT OF FILL.
11. PRIOR TO CONSTRUCTION, THE CONTRACTOR SHALL CLEARLY DESIGNATE THE LIMITS OF CONSTRUCTION ON-SITE. THE CONTRACTOR SHALL NOT PERFORM ANY WORK OUTSIDE THE LIMITS OF CONSTRUCTION. IN AREAS WHERE NO WORK IS PROPOSED THE CONTRACTOR SHALL PROTECT THE TOPOGRAPHY, THE SOIL, AND THE VEGETATION.
12. WHERE DEMOLITION REQUIREMENTS LEAVE OPEN TRENCHES, PITS OR OTHER VOIDS, PROVIDE CLEAN FILL AND COMPACTION PER THE SPECIFICATIONS, THE GEOTECHNICAL REPORT OR OTHER REQUIREMENTS.
13. REMOVAL OF EXISTING PAVED SURFACES INCLUDES REMOVAL OF EXISTING BASE OR SOIL MATERIALS SUFFICIENTLY TO CONSTRUCT THE NEW SURFACE IN ACCORDANCE WITH THE CONSTRUCTION PLANS.
14. ALL DEMOLISHED MATERIALS SHALL BE REMOVED FROM THE SITE AT THE CONTRACTOR'S EXPENSE. DEBRIS SHALL BE DISPOSED OF IN ACCORDANCE WITH LOCAL, STATE AND FEDERAL REGULATIONS.
15. ALL ASPHALT AND CONCRETE SHALL BE SAW CUT AT EDGES TO REMAIN. REMAINING EDGES SHALL BE PROTECTED AT THE CONTRACTOR'S EXPENSE.
16. CONTRACTOR SHALL MAINTAIN EXISTING DRAINAGE PATTERNS WHILE REMOVING OR REPAIRING ANY EXISTING STORM DRAINS OR SWALES.
17. CONTRACTOR SHALL REFER TO ARCHITECTURAL DEMOLITION PLAN FOR LIMITS OF REMOVAL OF BUILDING RELATED ITEMS SUCH AS AWNINGS AND SIDEWALK ADJACENT TO BUILDING.
18. COORDINATE DISCONNECTION OF ALL UTILITY SERVICES WITH APPROPRIATE UTILITY COMPANIES.
19. DEMOLITION WORK SHALL BE COORDINATED WITH EACH PHASE OF THE WORK. DO NOT PROCEED WITH ANY DEMOLITION UNTIL SPECIFICALLY AUTHORIZED BY OWNER.
20. CONTRACTOR SHALL ROUGH IN STORMWATER POND(S) IMMEDIATELY FOLLOWING CLEARING AND PRIOR TO ANY OTHER CONSTRUCTION ACTIVITIES.
21. EXCAVATED MATERIALS (SPOILS) SHALL BE DISPOSED OF AS REQUIRED IN UPLAND AREAS IN ACCORDANCE WITH LOCAL, STATE AND FEDERAL LAWS. IF SPOILS ARE TO BE STORED ON SITE EITHER TEMPORARILY OR PERMANENTLY, THE STORAGE LOCATION SHALL BE AN UPLAND AREA APPROVED BY THE OWNER AND ENGINEER. THE SPOILS SHALL BE PREVENTED FROM ERODING WITH THE USE OF SILT FENCING AND GRASSING AS APPROPRIATE.
22. NO TREES LOCATED WIHTIN THE FDOT RIGHT-OF-WAY SHALL BE REMOVED WITHOUT PRIOR FDOT APPROVAL. IF TREE REMOVAL IS REQUIRED, THE CONTRACTOR SHALL PROVIDE THE DEPARTMENT WITH A REASON FOR REMOVAL. THE CONTRACTOR SHALL ALSO PROVIDE A TREE SURVEY BY A CERTIFIED FLORIDA ARBORIST TO VERIFY THE TREE DBH, SPECIES, AND CONDITION.
23. COORDINATE REMOVAL OF ELECTRICAL POLES AND WIRE WITH ELECTRICAL PLANS.

ARCHITECTURE + ENGINEERING
License No. 30000
License No. 26002939
1230 Oakley Seaver Drive, Suite 200 - Clermont, FL 34711
P: 888-850-FFAE (3323)
www.forefrontae.com
FOREFRONT
Service Beyond Design
Dale E. Long, P.E.
P.E. #55393

DEMOLITION AND EROSION CONTROL PLAN

PAXTON AGING FACILITY
22174 US HWY 331 N, PAXTON, FL 32567
WALTON COUNTY FLORIDA

MUNICIPAL ENGINEERING SERVICES INC
8874 Tuckey Bluff Road - Navarre, Florida 32566 - P: (850) 939-8732
CERTIFICATE OF AUTHORIZATION #: CA-00066

REVISIONS

1	FDOT COMMENT	01-02-2024

ANY DISCREPANCY OR ERROR IN DIMENSIONS OR NOTES SHALL BE BROUGHT TO THE ATTENTION OF THE DESIGN PROFESSIONAL FOR CLARIFICATION PRIOR TO COMMENCEMENT OF CONSTRUCTION.

JOB #: 230001
DATE: AUGUST 2023

C-102

© FOREFRONT ARCHITECTURE & ENGINEERING LLC 2014 THIS DOCUMENT AND/OR THE DESIGN CONCEPTS EXPRESSED HEREIN ARE THE PROPERTY OF FOREFRONT ARCHITECTURE & ENGINEERING LLC AND ALL RIGHTS OF OWNERSHIP, INCLUDING COPYRIGHT OF INTELLECTUAL PROPERTY, ARE RESERVED. ANY REPRODUCTIONS, COPYING, OR USE OF THIS DOCUMENT AND/OR THE DESIGN CONCEPT WITHOUT THE WRITTEN CONSENT OF FOREFRONT ARCHITECTURE & ENGINEERING LLC IS STRICTLY PROHIBITED AND PROTECTED BY UNITED STATES AND INTERNATIONAL LAW. IF PRINTED ON 11X17 SCALE IS HALF THE SIZE NOTED.

PAXTON AUTO, TRUCK AND TRACTOR PARTS

36-6N-21-40000-002-001A
JOHN B. CROWDER
SITE: 22254 N. US HWY 331
FLU:
USE: REPAIR SERVICE

METAL BUILDING

INSTALL: 92LF ~ FDOT TYPE 'F' CURB

8" WIRE FENCE AND 4' WIRE FENCE w/BARB WIRE

8" WIRE FENCE AND 4' WIRE FENCE w/BARB WIRE

4' WIRE FENCE w/BARB WIRE

4' 6-STRAND WIRE FENCE (ELECTRIFIED)

INSTALL: 8LF ~ FDOT TYPE 'F' CURB

INSTALL: 209LF ~ FDOT TYPE 'F' CURB

INSTALL: 48LF ~ FDOT TYPE 'F' CURB

INSTALL: 153SY ~ CONCRETE SIDEWALK

INSTALL: 64LF ~ FDOT TYPE 'F' CURB

INSTALL: 8LF ~ FDOT TYPE 'F' CURB

INSTALL: 44LF ~ FDOT TYPE 'F' CURB

INSTALL: 44LF ~ FDOT TYPE 'F' CURB

INSTALL: 96LF ~ FDOT TYPE 'F' CURB

INSTALL: 3' CURB TRANSITIONS (TYPICAL OF 10)

INSTALL: 217LF ~ FDOT TYPE 'F' CURB

10' SIDE SETBACK

BREAK LINE

SIDEWALK

BICYCLE PARKING

PAXTON AGING FACILITY
±3,573 SF
FFE: 333.00

INSTALL: 5' STABILIZED SHOULDER (TYPICAL EACH SIDE)

INSTALL: 3' CURB TRANSITION (TYP)

INSTALL: 74LF ~ FDOT TYPE 'F' CURB

25' FRONT SETBACK

INSTALL: WHEEL STOPS (TYPICAL)

INSTALL: 18LF ~ GUTTER PAN

INSTALL: 44LF ~ FDOT TYPE 'F' CURB

INSTALL: 182 LF ~ 6' CONCRETE SIDEWALK

INSTALL: 44LF ~ FDOT TYPE 'F' CURB

INSTALL: CONCRETE DUMPSTER PAD WITH SCREEN (SEE ARCHITECTURAL)

INSTALL: 141LF ~ FDOT TYPE 'F' CURB

INSTALL: 195LF ~ FDOT TYPE 'F' CURB

INSTALL: 3,435 SY~ ASPHALT PAVING

INSTALL: 92LF ~ FDOT TYPE 'F' CURB

DUMPSTER w/6' WPF

B1 B2 B3 B4 A1 A2 A3 S1 S2

36-6N-21-40000-002-0020
PAXTON FARNS, LLC
SITE: MATHIS ROAD
FLU:
USE: CROPLAND (CLASS 2)

25' FRONT SETBACK

20' REAR SETBACK

STORMWATER POND

ASPHALT PARKING

BENCHMARK:
60D NAIL IN POWER POLE
ELEVATION = 333.05'

DOLLAR GENERAL STORE
FFE=333.00±

STORMWATER POND

36-6N-21-40000-002-0010
STORAGE AT OCALA, LLC
SITE: 22174 N. US HWY 331
FLU:
USE: RETAIL STORE

STATE ROAD 187 (US-331)
(RIGHT-OF-WAY VARIES)

MP20.429

MP20.324

MP20.387

SSMH
TOP=328.15'
INV NORTH=321.92'
INV EAST=322.87'
INV SOUTH=322.28'

18" CMP
INV(NW)=328.00
INV(SE)=328.30

18" CMP
INV(NW)=329.18
INV(SE)=38615

CONCRETE POND OVERFLOW FLUME w/TRASH RACK

EASTERLY R/W LINE

WESTERLY R/W LINE

EOP

FOG LINE

10' SIDE SETBACK

20' RIGHT-OF-WAY FOR MATHIS ROAD

20' RIGHT-OF-WAY FOR MATHIS ROAD

MATHIS ROAD
(20' RIGHT-OF-WAY)
(CLAY AND DIRT)

BENCHMARK:
60D NAIL IN POWER POLE
ELEVATION = 333.12'

36-6N-21-40000-017-0000
PAXTON FARMS, LLC
SITE: 22148 N. US HWY 331
FLU:
USE: IMPROVED AGRICULTURAL

CONSTRUCTION NOTES:

1. THE CONTRACTOR IS ADVISED THAT THE WALTON COUNTY PUBLIC WORKS DEPARTMENT WILL PROVIDE SOME CONSTRUCTION SERVICES REALATED TO THE PROJECT. THESE SPECIFIC CONSTRUCTION ITEMS SHOULD BE EXCLUDED FROM THE CONTRACTOR'S SCOPE OF WORK. THE CONTRACTOR IS EXPECTED TO COORDINATE WITH THE WALTON COUNTY STAFF.
2. WALTON COUNTY PUBLIC WORKS IS PROVIDING THE FOLLOWING SCOPE OF WORK AS IT RELATES TO THE ASPHALT DRIVEWAYS AND PARKING AREAS ONLY:
   - A. SUBGRADE PLACEMENT, GRADING, AND COMPACTION.
   - B. BASE MATERIAL PLACEMENT, GRADING, AND COMPACTION.
   - C. PRIME/TACK COAT AS REQUIRED.
   - D. ASPHALT PAVING PLACEMENT, FINISHING AND TESTING. THE CONTRACTOR SHALL INCLUDE PURCHASING AND DELIVERY OF THE REQUIRED ASPHALT AS PART OF THEIR BID.
   - E. SITE STRIPING AND SIGNAGE (FOR THE PARKING LOT AND DRIVE AISLES).
   - F. WHEELSTOPS.

SITE BUILDING SETBACKS

FRONT = 25 FEET
SIDE = 10 FEET
REAR = 20 FEET

SITE INFORMATION

	SF	AC
TOTAL PARCEL AREA =	100,514	2.31
PRE-DEVELOPED		
PERVIOUS AREA =	81,459	1.87
IMPERVIOUS AREA (ASPHALT) =	19,055	0.44
POST-DEVELOPED		
PERVIOUS AREA =	61,438	1.41
IMPERVIOUS AREA =	39,076	0.9
CONCRETE =	2,667	
ASPHALT =	32,836	
BUILDINGS =	3,573	
PERCENT PERVIOUS COVER =	61%	
FLOOR AREA RATIO (FAR) =	0.04	

N
MES INC

GRAPHIC SCALE:

30 15 0 30 60 90

SCALE IN FEET SCALE: 1" = 30'

ARCHITECTURE + ENGINEERING
License No. 30900
License No. 26002939
1230 Oakley Seaver Drive, Suite 200 - Clermont, FL 34711
P: 888-850-FFAE (3323)
www.forefrontae.com

FOREFRONT
Service Beyond Design

Dale E. Long, P.E.
P.E. #55393

SITE PLAN

PAXTON AGING FACILITY
22174 US HWY 331 N, PAXTON, FL 32567
WALTON COUNTY FLORIDA

MUNICIPAL ENGINEERING SERVICES INC
8874 Thackery Blvd Road - Navarre, Florida 32566 - P: (850) 939-8732
CERTIFICATE OF AUTHORIZATION CA-29068

REVISIONS

1	FDOT COMMENT	03-25-2024

ANY DISCREPANCY OR ERROR IN DIMENSIONS OR NOTES SHALL BE BROUGHT TO THE ATTENTION OF THE DESIGN PROFESSIONAL FOR CLARIFICATION PRIOR TO COMMENCEMENT OF CONSTRUCTION.

JOB #: 230001
DATE: AUGUST 2023

C-201

R:\PROJ\2023\230001 Paxton Senior Center\DWG\Sheets\30 Site Plan, Plot Date: Tuesday, May 21, 2024,9:00:13 AM, Plotted By: mdorman

© FOREFRONT ARCHITECTURE & ENGINEERING LLC 2014 THIS DOCUMENT AND/OR THE DESIGN CONCEPTS EXPRESSED HEREIN ARE THE PROPERTY OF FOREFRONT ARCHITECTURE & ENGINEERING LLC AND ALL RIGHTS OF OWNERSHIP, INCLUDING COPYRIGHT OF INTELLECTUAL PROPERTY, ARE RESERVED. ANY REPRODUCTIONS, COPYING, OR USE OF THIS DOCUMENT AND/OR THE DESIGN CONCEPT WITHOUT THE WRITTEN CONSENT OF FOREFRONT ARCHITECTURE & ENGINEERING LLC IS STRICTLY PROHIBITED AND PROTECTED BY UNITED STATES AND INTERNATIONAL LAW. IF PRINTED ON 11X17 SCALE IS HALF THE SIZE NOTED.

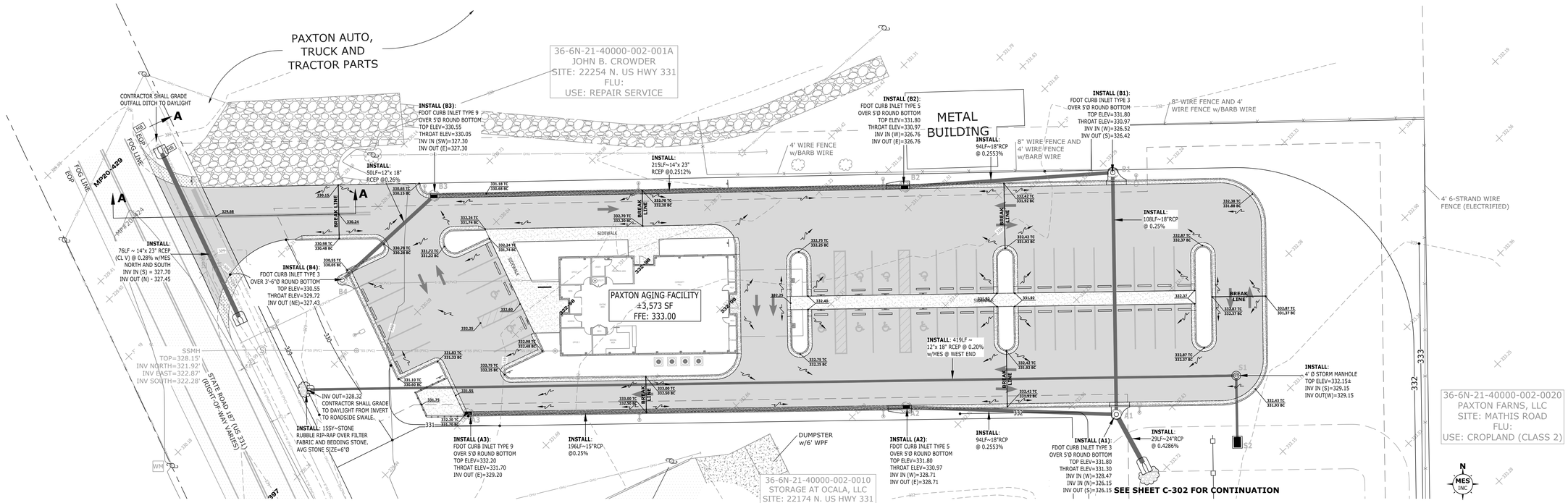

GRAPHIC SCALE:

20 10 0 20 40 60

SCALE IN FEET SCALE: 1" = 20'

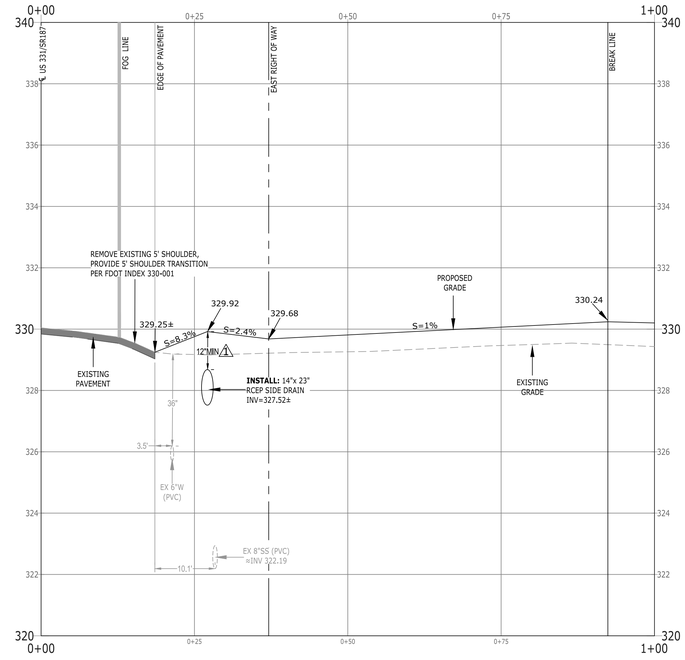

⚠ DRIVEWAY ENTRANCE SECTION A-A

SCALE: 1"=10' HORIZ, 1"=2' VERT

PAVING GRADING AND DRAINAGE NOTES:

1. ALL DRAINAGE STRUCTURES ARE TO BE TRAFFIC RATED UNLESS SPECIFICALLY NOTED OTHERWISE.
2. AFTER THE DRIVEWAY, PARKING, DRIVE AISLES HAVE BEEN CONSTRUCTED TO SUBGRADE, THEY SHALL BE PROOF-ROLLED TO ASSURE THAT PROPER COMPACTION HAS BEEN ATTAINED. THE PROOF-ROLLING AND COMPACTION OPERATIONS SHALL BE INSPECTED AND TESTED BY A FLORIDA LICENSED GEOTECHNICAL ENGINEER TO ASSURE THAT THE SPECIFIED COMPACTION IS MAINTAINED AND ALL DELETERIOUS MATERIALS HAVE BEEN REMOVED.
3. ALL REINFORCED CONCRETE PIPE (RCP) SHALL BE A MINIMUM CLASS III, UNLESS OTHERWISE APPROVED OR NOTED ON THE PLANS OR SPECIFICATIONS.
4. THE CONTRACTOR IS RESPONSIBLE FOR GRADING/PAVING ALL ROADWAYS TO DRAIN POSITIVELY IN THE DIRECTION SHOWN BY THE PROPOSED GRADES AND FLOW ARROWS ON THE PLANS. INTERSECTIONS SHALL BE TRANSITIONED TO PROVIDE A SMOOTH DRIVING SURFACE WHILE MAINTAINING POSITIVE DRAINAGE. IF AN AREA OF POOR DRAINAGE IS OBSERVED DURING CONSTRUCTION, THE CONTRACTOR SHALL NOTIFY THE ENGINEER PRIOR TO PAVING SO THAT A SOLUTION OR RECOMMENDATION FOR CORRECTION CAN BE MADE.
5. ALL STORMWATER PIPE JOINTS SHALL BE WRAPPED WITH FILTER FABRIC.
6. CONTRACTOR SHALL SCREED ALL SIDEWALKS ¼" PER FOOT AWAY FROM THE BUILDING.
7. ALL HANDICAP ACCESSIBLE SIDEWALKS/ROUTES SHALL BE CONSTRUCTED TO LIMIT CROSS SLOPES TO 2.0% MAXIMUM.
8. ALL NEW AND EXISTING ROOF DRAINS, DOWNSPOUTS, AND GUTTERS SHALL BE DIRECTED TOWARDS PROPOSED/EXISTING STORMWATER SYSTEM AS SHOWN ON THE PLANS.
9. CONTRACTOR SHALL REFER TO MECHANICAL/ARCHITECTURAL PLANS FOR CONNECTIONS TO DOWNSPOUTS AND ROOF DRAINS AT THE FACE OF BUILDING, AS APPLICABLE.
10. SLOPES FOR PROPOSED PIPES FROM DOWNSPOUTS TO HEADER LINES SHOWN ON THE PLANS ARE TO BE CONSIDERED MINIMUM SLOPES. CONTRACTOR SHALL ADJUST PIPE SLOPES AS REQUIRED TO CONNECT TO ROOF DRAINS. CONTRACTOR SHALL NOTE FINAL SLOPES ON AS-BUILT DRAWING.
11. AS A CONDITION OF THE ENVIRONMENTAL RESOURCE PERMIT, THE CONTRACTOR SHALL:
    a. KEEP A COPY OF THE PERMIT ON SITE.
    b. REVIEW THE PERMIT PRIOR TO CONSTRUCTION COMMENCEMENT.
    c. PROVIDE AN 8-1/2" X 11" WEATHER-PROOF ENCLOSURE INCLUDING THE PERMIT NUMBER FACING THE ROAD ON SITE.
12. THE OWNER WILL BE RESPONSIBLE FOR MONITORING CONSTRUCTION AND SUBMITTING A NOTICE OF CONSTRUCTION COMMENCEMENT AND AN AS-BUILT CERTIFICATION FOR THE PROJECT UPON COMPLETION.
13. THE CONTRACTOR SHALL GRADE ALL POND BOTTOMS TO DRAIN TOWARDS THE SAND FILTER, THE EQUALIZER PIPES, OR OUTFALL STRUCTURE AS APPROPRIATE.

PUBLIC RIGHT-OF-WAY NOTES:

1. IT SHALL BE THE CONTRACTOR'S RESPONSIBILITY TO OBTAIN ALL PERMITS AND LICENSES NECESSARY TO WORK IN THE CITY OF PAXTON RIGHT-OF-WAY.
2. NO ROADWAYS SHALL BE CLOSED, LANE CLOSURES MAY BE ALLOWED WITH ADEQUATE NOTICE GIVEN AND PRIOR APPROVAL. ROAD LANE CLOSURES SHALL BE KEPT AS SHORT AS POSSIBLE AND SHALL BE COORDINATED WITH THE AGENCY HAVING JURISDICTION (AHJ) - DEPARTMENT OF TRANSPORTATION, CITY, OR COUNTY AS APPLICABLE. THE AHJ SHALL BE NOTIFIED 72 HOURS IN ADVANCE BEFORE ANY WORK COMMENCES ON THEIR RIGHT-OF-WAY. TEMPORARY ACCESS TO ALL DRIVEWAYS SHALL BE PROVIDED WITHIN TWO (2) HOURS OF INITIAL DISRUPTION AND MAINTAINED UNTIL FINAL PROJECT ACCEPTANCE BY THE OWNER.
3. THE CONTRACTOR IS RESPONSIBLE FOR TRAFFIC CONTROL ON ALL ROADWAYS. PRIOR TO PERFORMING ANY WORK WITHIN ANY PUBLIC RIGHT-OF-WAY, THE CONTRACTOR SHALL DEVELOP AND SUBMIT A MAINTENANCE OF TRAFFIC PLAN TO THE AGENCY HAVING JURISDICTION FOR THEIR APPROVAL. THIS PLAN MUST MEET THE MINIMUM REQUIREMENTS AS OUTLINED IN THE FDOT STANDARD PLANS INDEX 102 AS APPLICABLE.
4. ALL RIGHT-OF-WAY INSTALLATIONS WILL BE IN ACCORDANCE WITH PRACTICES REFERENCED IN THE STATE OF FLORIDA UTILITY ACCOMMODATIONS MANUAL, LATEST EDITION.
5. SIGNS AND BARRICADES SHALL BE IN ACCORDANCE WITH THE US DEPARTMENT OF TRANSPORTATION'S MANUAL ON UNIFORM TRAFFIC CONTROL DEVICES (MUTCD) AND FDOT REQUIREMENTS.
6. ASPHALT PAVING, CONCRETE OR PAVED SHOULDERS, OR SWALES DISTURBED DURING CONSTRUCTION SHALL BE REPLACED IN KIND AT THE CONTRACTOR'S EXPENSE. PAYMENT FOR PAVEMENT CUT AND PATCH IS LIMITED TO THE HATCHED AREAS SHOWN ON THE PLANS. PAVEMENT SHALL BE PROTECTED OR REPAIRED AT THE CONTRACTOR'S EXPENSE AT ALL OTHER LOCATIONS.

ARCHITECTURE + ENGINEERING
License No. 30000
1230 Oakley Seaver Drive, Suite 200 - Clermont, FL 34711
P: 888-850-FFAE (3323)
www.forefrontae.com
FOREFRONT
Service Beyond Design
Dale E. Long, P.E.
P.E. #55393

GRADING AND DRAINAGE PLAN

PAXTON AGING FACILITY
22174 US HWY 331 N, PAXTON, FL 32567
WALTON COUNTY FLORIDA

MUNICIPAL ENGINEERING SERVICES INC
8374 Turkey Bluff Road - Navarre, Florida 32566 - P: (850) 939-9732
CERTIFICATE OF AUTHORIZATION COA-00008

REVISIONS

1	FDOT COMMENT 01-02-2024

ANY DISCREPANCY OR ERROR IN DIMENSIONS OR NOTES SHALL BE REPORTED IMMEDIATELY TO THE GREEN PROFESSIONAL FOR CLARIFICATION PRIOR TO COMMENCEMENT OF CONSTRUCTION.

JOB #: 230001
DATE: AUGUST 2023

C-301

R:\MES\2023\230001 Paxton Senior Center\DWG\Sheets\30 Site Plan; Plot Date: Thursday, March 28, 2024,3:22:15 PM; Plotted By: mdorman

© FOREFRONT ARCHITECTURE & ENGINEERING LLC 2014 THIS DOCUMENT AND/OR THE DESIGN CONCEPTS EXPRESSED HEREIN ARE THE PROPERTY OF FOREFRONT ARCHITECTURE & ENGINEERING LLC AND ALL RIGHTS OF OWNERSHIP, INCLUDING COPYRIGHT OF INTELLECTUAL PROPERTY, ARE RESERVED. ANY REPRODUCTIONS, COPYING, OR USE OF THIS DOCUMENT AND/OR THE DESIGN CONCEPT WITHOUT THE WRITTEN CONSENT OF FOREFRONT ARCHITECTURE & ENGINEERING LLC IS STRICTLY PROHIBITED AND PROTECTED BY UNITED STATES AND INTERNATIONAL LAW. IF PRINTED ON 11X17 SCALE IS HALF THE SIZE NOTED.

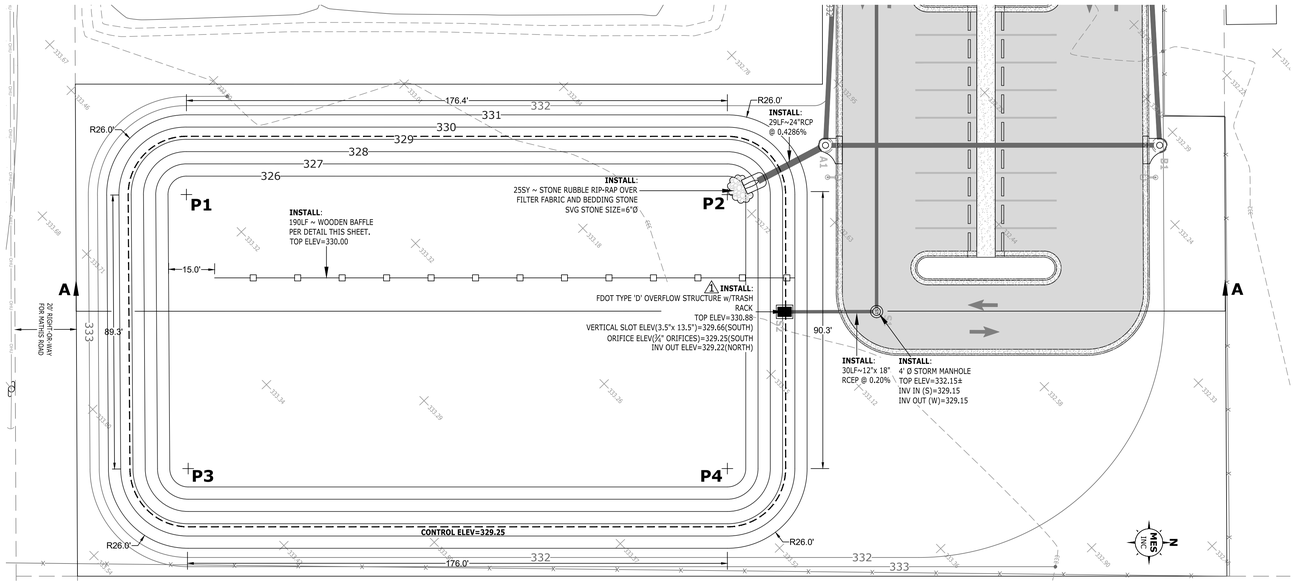

STORMWATER MAINTENANCE NOTES:

1. THE STORMWATER FACILITY SHALL BE MAINTAINED AS NECESSARY IN ORDER TO PROVIDE FOR CONTINUED OPERATION AS DESIGNED.
2. THE OWNER SHALL KEEP ALL PONDS, INLETS, FLUMES, AND/OR SWALES FREE OF ACCUMULATED DEBRIS, SILTATION, AND OTHER OBJECTIONABLE MATERIALS THAT WOULD AFFECT THEIR OPERATION.
3. THE SCHEDULE FOR SUCH MAINTENANCE ACTIVITIES SHALL BE ON AN AS-NEEDED BASIS, DEPENDING ON THE RATE OF DEBRIS ACCUMULATION, GRASS AND VEGETATION GROWTH, AND OTHER VARYING CONDITIONS.
4. IN GENERAL, THE PROCEDURES AND SCHEDULE OF MAINTENANCE ACTIVITIES SHALL CONFORM TO THE REQUIREMENTS OF THE ENVIRONMENTAL RESOURCE PERMIT.
5. SOD IS REQUIRED FOR ALL OF PONDS, UNLESS OTHERWISE NOTED ON THE DETAILS. SOD FOR PONDS SHALL BE EXTENDED TO A MINIMUM OF 5 FEET BEYOND THE POND TOP ELEVATION. TWO ROWS OF SOD IS ALSO REQUIRED ADJACENT TO ALL PAVED AREAS. SOD SHALL BE WATERED IN AT THE CONTRACTOR'S EXPENSE UNTIL FULLY ROOTED AND GROWING. SOD SHALL BE PINNED FOR ALL SLOPES STEEPER THAN 4:1.

STORMWATER POND

POINT	DESCRIPTION	NORTHING	EASTING
P1	SOUTHWEST CORNER	723593.4665	1403191.4497
P2	NORTHWEST CORNER	723769.8414	1403188.8721
P3	NORTHEAST CORNER	723595.3567	1403280.7766
P4	SOUTHEAST CORNER	723771.1579	1403278.1852

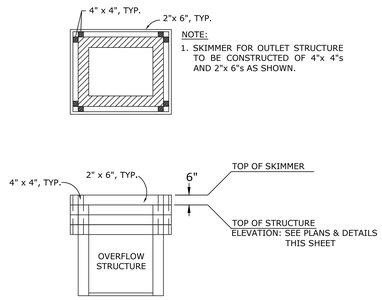

SKIMMER DETAIL
NOT TO SCALE

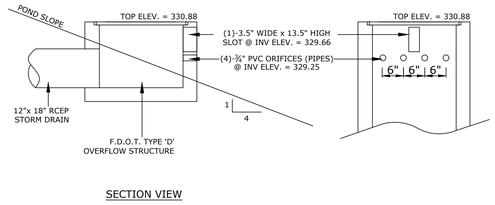

SECTION VIEW

⚠1⚠2 OVERFLOW STRUCTURE DETAIL
NOT TO SCALE

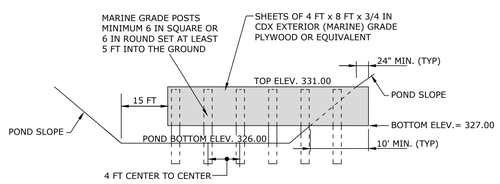

BAFFLE DETAIL
NOT TO SCALE

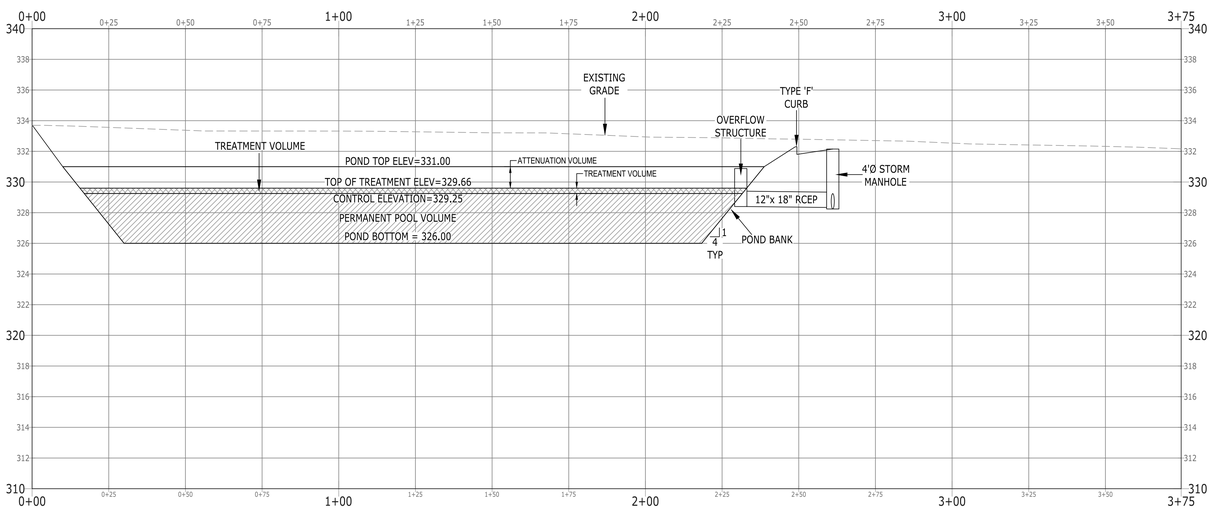

STORMWATER POND
SECTION A-A
SCALE: 1"=20' HORIZ, 1"=4' VERT

⚠2 **UPDATE POND GEOMETRY AND OVERFLOW STRUCTURE**

ARCHITECTURE + ENGINEERING
License No. 30900
1230 Oakley Seaver Drive, Suite 200 - Clermont, FL 34711
P: 888-850-FFAE (3323)
www.forefrontae.com
FOREFRONT
Service Beyond Design
Dale E. Long, P.E.
P.E. #55393

STORMWATER POND
SECTIONS, DETAILS & NOTES

PAXTON AGING FACILITY
22174 US HWY 331 N, PAXTON, FL 32567
WALTON COUNTY FLORIDA

MUNICIPAL ENGINEERING SERVICES INC
8874 Tuckey Bluff Road - Navarre, Florida 32566 - P: (850) 939-9732
CERTIFICATE OF AUTHORIZATION #EC-0000686

REVISIONS

⚠1	FDOT COMMENT	01-02-2024
⚠2	FDOT COMMENT	03-03-2024

ANY DISCREPANCY OR ERROR IN DIMENSIONS OR NOTES SHALL BE BROUGHT TO THE ATTENTION OF THE DESIGN PROFESSIONAL FOR CLARIFICATION PRIOR TO COMMENCEMENT OF CONSTRUCTION.

JOB #: 230001
DATE: AUGUST 2023

C-302

K:\PROJ\2023\230001 Paxton Senior Center\DWG\Sheets\30 Site Plan; Plot Date: Friday, April 05, 2024,1:30:15 PM; Plotted By: dlong

© FOREFRONT ARCHITECTURE & ENGINEERING LLC 2014 THIS DOCUMENT AND/OR THE DESIGN CONCEPTS EXPRESSED HEREIN ARE THE PROPERTY OF FOREFRONT ARCHITECTURE & ENGINEERING LLC AND ALL RIGHTS OF OWNERSHIP, INCLUDING COPYRIGHT OF INTELLECTUAL PROPERTY, ARE RESERVED. ANY REPRODUCTIONS, COPYING, OR USE OF THIS DOCUMENT AND/OR THE DESIGN CONCEPT WITHOUT THE WRITTEN CONSENT OF FOREFRONT ARCHITECTURE & ENGINEERING LLC IS STRICTLY PROHIBITED AND PROTECTED BY UNITED STATES AND INTERNATIONAL LAW. IF PRINTED ON 11X17 SCALE IS HALF THE SIZE NOTED.

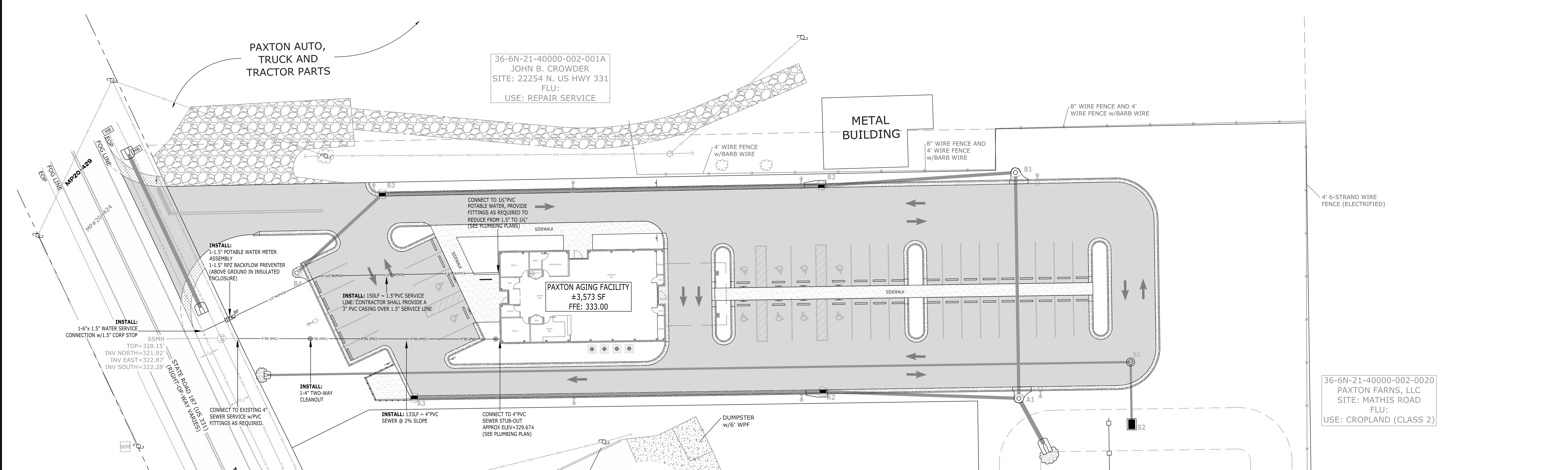

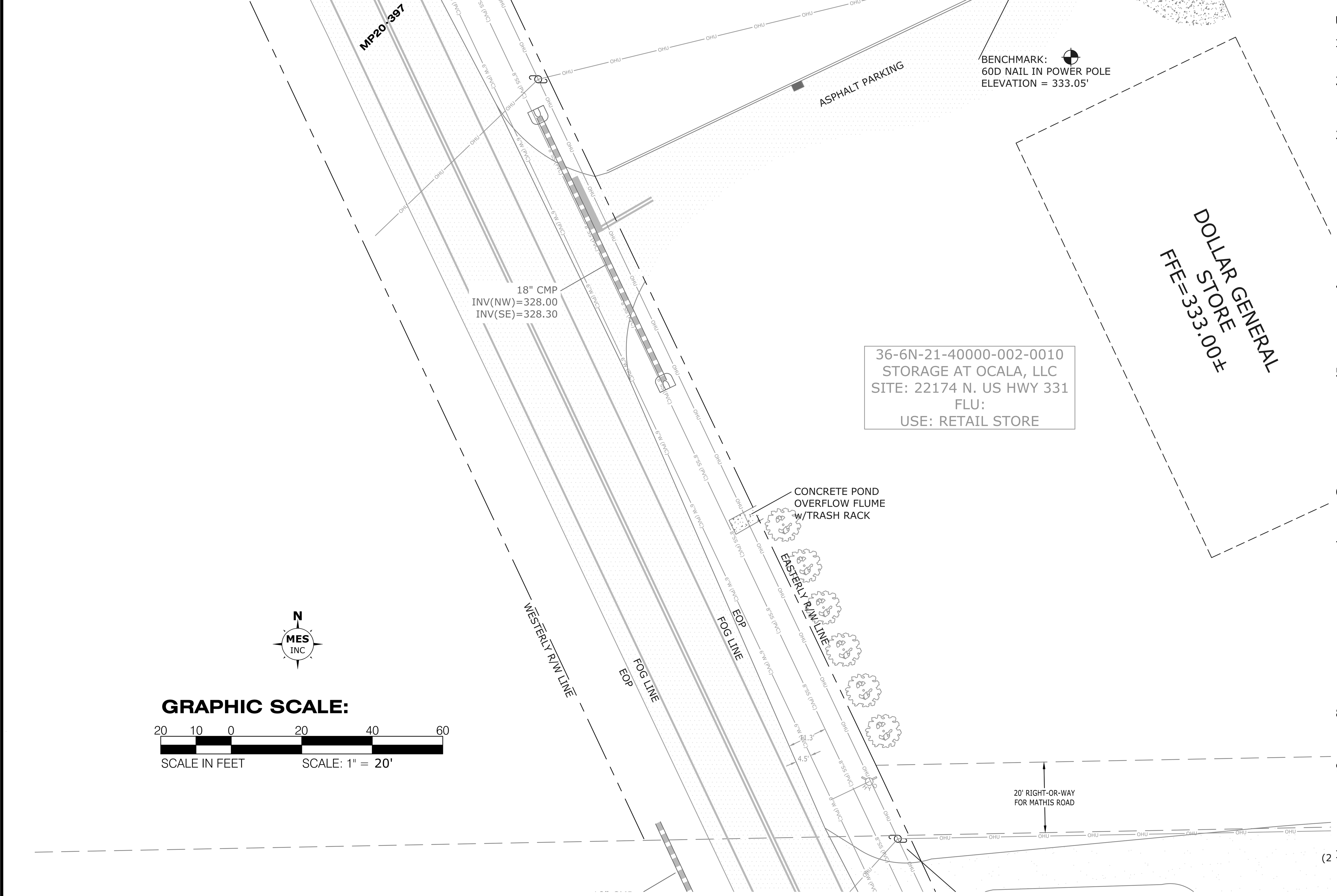

UTILITY NOTES:

1. ALL UTILITY CONSTRUCTION SHALL CONFORM TO THE CITY OF PAXTON STANDARD GUIDELINES AND SPECIFICATIONS, LATEST EDITION, AND STANDARD DETAILS.
2. THE EXISTING UTILITIES SHOWN ON THESE PLANS ARE APPROXIMATE. THE CONTRACTOR SHALL FIELD LOCATE ALL EXISTING UTILITIES AS TO SIZE, LOCATION, AND ELEVATION. THE CONTRACTOR SHALL NOTIFY THE ENGINEER OF ANY AND ALL CONFLICTS PRIOR TO BEGINNING CONSTRUCTION.
3. THE CONTRACTOR SHALL BE RESPONSIBLE FOR LOCATING AND VERIFYING SIZE, TYPE, LOCATION, AND ELEVATION OF ALL EXISTING UTILITIES PRIOR TO CONSTRUCTION AND NOTIFYING THE INVOLVED UTILITY PROVIDERS TO MAKE ANY NECESSARY ARRANGEMENTS FOR RELOCATION, DISRUPTION OF SERVICE OR CLARIFICATION OF ACTIVITY REGARDING SAID UTILITY. THE CONTRACTOR SHALL USE EXTREME CAUTION WHEN CROSSING AN UNDERGROUND UTILITY, WHETHER SHOWN ON THESE PLANS OR FIELD LOCATED. THE RESPECTIVE UTILITY PROVIDERS SHALL RELOCATE UTILITIES THAT INTERFERE WITH THE PROPOSED CONSTRUCTION AND THE CONTRACTOR SHALL COOPERATE WITH THE UTILITY PROVIDERS DURING RELOCATION OPERATIONS. ANY DELAY OR INCONVENIENCE CAUSED BY THE INVOLVED UTILITIES SHALL BE INCIDENTAL TO THE CONTRACT.
4. THE CONTRACTOR SHALL ADHERE TO FLORIDA STATUTE CHAPTER 556 AND THE SUNSHINE 811 OF FLORIDA. CONTRACTOR SHALL NOTIFY ALL UTILITY OWNERS AND THE SUNSHINE UNDERGROUND NOTIFICATION CENTER AT 811 AT LEAST 48 HOURS PRIOR TO START OF WORK. CONTRACTOR IS RESPONSIBLE FOR CONTINUAL MAINTENANCE OF ALL UTILITY LOCATES, FLAGS, MARKINGS, ET CETERA THROUGH THE ENTIRE DURATION OF CONSTRUCTION.
5. UTILITY SERVICES TO THE PROPOSED BUILDING(S) SHALL TERMINATE 5 FEET OUTSIDE OF THE BUILDING UNLESS OTHERWISE NOTED. PRIOR TO CONSTRUCTION, THE CONTRACTOR SHALL REVIEW BUILDING ARCHITECTURAL AND PLUMBING PLANS TO VERIFY PROPER CONTINUATION OF THE PROPOSED UTILITIES FOR LOCATION, ALIGNMENT AND ELEVATION(S) FOR EACH SERVICE TO THE BUILDING(S). SHOULD UTILITY SERVICE LATERALS SHOWN ON THE SITE CIVIL CONSTRUCTION PLANS NOT CORRESPOND WITH BUILDING ARCHITECTURAL OR PLUMBING PLANS THE CONTRACTOR SHALL NOTIFY THE ENGINEER IMMEDIATELY.
6. ALL VALVE BOXES SHALL BE SET FLUSH IN A CONCRETE COLLAR TO FINISH GRADE. ALL CONCRETE VALVE COLLARS SHALL BE CIRCULAR PRECAST MEMBER WITH A MINIMUM ANNULAR COVERAGE OF 6-INCHES.
7. THE CONTRACTOR SHALL COMPLY WITH ALL LOCAL, STATE AND FEDERAL CODES, RULES AND REGULATIONS REGARDING UTILITY LOCATIONS. THE CONTRACTOR IS COMPLETELY AND SOLELY RESPONSIBLE FOR ALL DAMAGES TO ANY UTILITIES CAUSED AS A RESULT OF, OR BY, THE CONSTRUCTION. THE LOCATION OF EXISTING UTILITIES ON THESE PLANS IS SHOWN IN AN APPROXIMATE WAY ONLY AND WAS TAKEN FROM LIMITED FIELD LOCATES AND THE BEST INFORMATION AVAILABLE. THE CONTRACTOR SHALL CONTACT GULF POWER AND/OR AT&T TO SUPPORT OR RELOCATE EXISTING POLES DURING CONSTRUCTION IF NECESSARY. THE CONTRACTOR SHALL PAY THE RESPECTIVE COMPANY FOR THIS WORK. THE CONTRACTOR SHALL COORDINATE ALL OTHER UTILITY WORK OR CONNECTIONS WITH THE APPROPRIATE UTILITY COMPANIES. UNDERGROUND UTILITIES MAY EXIST THAT ARE NOT SHOWN.
8. ALL NEW UTILITY MAINS (POTABLE WATER, RECLAIMED WATER, OR SANITARY FORCEMAINS) SHALL HAVE A MINIMUM COVER OF 30-INCHES AND A MAXIMUM COVER OF 36-INCHES, UNLESS OTHERWISE NOTED.
9. AT TIMES WHEN PIPE INSTALLATION IS NOT IN PROGRESS, THE OPEN ENDS OF THE PIPE SHALL BE CLOSED BY AN APPROVED MEANS AND SHALL REMAIN CLOSED UNTIL CONSTRUCTION OF THAT PARTICULAR SECTION IS RESUMED. NO OPEN TRENCHES WILL BE ALLOWED WHEN PIPE INSTALLATION IS NOT IN PROGRESS. THE TERMINAL JOINT MAY BE LEFT EXPOSED IN AN OPEN TRENCH, PROVIDED ADEQUATE SAFETY BARRICADES ARE INSTALLED BY THE CONTRACTOR.
10. CONNECTIONS TO EXISTING WATER AND SEWER FACILITIES SHALL BE COORDINATED WITH CITY OF PAXTON AT (850)834-2489 PRIOR TO MAKING CONNECTIONS. A REPRESENTATIVE OF THE CITY OF PAXTON SHALL WITNESS ALL CONNECTIONS AND OPERATE ALL VALVES.
11. PRESSURE PIPES SHALL BE ADJUSTED VERTICALLY GRADUALLY WITHOUT THE USE OF FITTINGS AS REQUIRED TO ACCOMMODATE EXISTING UTILITIES. IF GRADUAL LOWERING IS NOT POSSIBLE, APPROPRIATE FITTINGS AND JOINT RESTRAINT SHALL BE PROVIDED TO AVOID THE EXISTING CONFLICT. NO FITTINGS GREATER THAN 45° WILL BE ALLOWED. SEPARATION SHALL BE A MINIMUM OF 18" UNLESS OTHERWISE NOTED ON THE PLANS. CONTRACTOR SHALL REFERENCE PLAN NOTES AND CONFLICT DETAILS FOR ADDITIONAL GUIDANCE.
12. THE CONTRACTOR SHALL BE RESPONSIBLE FOR MAKING ALL NECESSARY ARRANGEMENTS WITH GOVERNMENTAL DEPARTMENTS, PUBLIC UTILITIES, PUBLIC CARRIERS, SERVICE COMPANIES, AND CORPORATIONS OWNING OR CONTROLLING ROADWAYS, RAILWAYS, WATER, SEWER, GAS, ELECTRICAL, TELEPHONE, AND TELEGRAPH FACILITIES, SUCH AS PAVEMENTS, TRACKS, PIPING, WIRES, CABLES, CONDUITS, POLES, GUYS, OR OTHER SIMILAR FACILITIES, INCLUDING INCIDENTAL STRUCTURES CONNECTED THEREWITH THAT ARE ENCOUNTERED IN THE WORK IN ORDER THAT SUCH ITEMS MAY BE PROPERLY SUPPORTED, PROTECTED OR LOCATED.
13. THE CONTRACTOR SHALL BE RESPONSIBLE FOR THE REPAIR OR REPLACEMENT OF PRIVATELY (HOMEOWNER/HOA) OWNED UNDERGROUND UTILITIES SUCH AS SPRINKLER SYSTEMS, SEPTIC DRAIN LINES, UNDERDRAINS, ETC. THAT ARE DAMAGED OR DESTROYED DURING CONSTRUCTION.
14. IN LOCATIONS WHERE CONSTRUCTION IS SHOWN CROSSING EXISTING UTILITIES, THE CONTRACTOR SHALL POTHOLE THE EXISTING UTILITIES TO CONFIRM LOCATION, SIZE AND DEPTH IN ADVANCE OF CONSTRUCTION. CONTRACTOR SHALL USE THE POTHOLE INFORMATION TO PROVIDE THE REQUIRED CLEARANCE BETWEEN THE PROPOSED UTILITY LINE ABOVE OR BELOW THE EXISTING UTILITIES.
15. CONTRACTOR SHALL COORDINATE SERVICE OUTAGES RELATED TO UTILITY TIE-INS WITH CITY OF PAXTON STAFF. CONTRACTOR IS ADVISED THAT TIE-INS MAY NEED TO BE MADE OVERNIGHT DURING OFF-PEAK HOURS.
16. GRAVITY SANITARY SEWER PIPE LENGTHS SHOWN ON THE PLANS ARE FROM CENTER OF MANHOLE TO CENTER OF MANHOLE.
17. MANHOLE TOP ELEVATIONS SHOWN ARE APPROXIMATE ONLY. IT SHALL BE THE CONTRACTOR'S RESPONSIBILITY TO ENSURE THAT THE TOP ELEVATIONS ARE SET FLUSH WITH THE FINAL GRADE, UNLESS SPECIFICALLY NOTED OTHERWISE ON THE CONSTRUCTION PLANS.
18. FOR CONNECTION OF PROPOSED SEWER TO EXISTING MANHOLES, THE CONTRACTOR SHALL CORE EXISTING MANHOLE AND CONNECT THE PROPOSED SEWER LINE TO THE EXISTING MANHOLE WITH A FLEXIBLE BOOT OR ENGINEER APPROVED CONNECTION IN ACCORDANCE WITH THE SPECIFICATIONS. THE CONTRACTOR SHALL PROVIDE A WATERTIGHT CONNECTION AND RE-SHAPE THE MANHOLE INVERT TO ACCOMMODATE THE NEW PIPE AND FLOW. CONTRACTOR SHALL PREVENT ANY DEBRIS FROM EXITING THE MANHOLE DURING THE CORING OPERATION AND ALL CORING DEBRIS SHALL BE REMOVED FROM THE MANHOLE AND SEWER LINES ONCE THE CONNECTION IS MADE.
19. UTILITY OWNERS SHALL BE NOTIFIED AT LEAST 48 HOURS PRIOR TO ANY CONSTRUCTION SO THAT THE UTILITY OWNER CAN SPOT VERIFY AND/OR EXPOSE THEIR UTILITIES. KNOWN UTILITIES OWNERS INCLUDE:

    SEWER/WATER - CITY OF PAXTON
    MR. ADAM BRYAN
    PH: (850) 834-2489

    TELEPHONE - CONSOLIDATED COMMUNICATIONS
    MS. SUSIE AMBROSE
    (850) 229-7347

    ELECTRIC - FLORIDA POWER & LIGHT
    MR. DEREK GILMORE
    PH: (850) 777-9476

    ELECTRIC - CHELCO
    MR. QUINTIN BETTIS
    (850) 307-1235

    CABLE - SPECTRUM
    MR. JOEY PRIDGEN
    (205) 209-2028

    FIBER OPTIC - UNITI FIBER
    MR. KYLE HILL
    (850) 544-1400

    TRAFFIC DEPARTMENT - WALTON COUNTY PUBLIC WORKS
    MS. ANNA HUDSON, P.E.
    (850) 892-8108

20. CONTRACTOR SHALL USE CAUTION WHEN WORKING IN OR AROUND AREAS OF OVERHEAD TRANSMISSION LINES AND UNDERGROUND UTILITIES.
21. UTILITIES TO REMAIN AND BE PROTECTED DURING CONSTRUCTION. NECESSARY REPAIRS SHALL BE CONSIDERED INCIDENTAL TO OTHER PAY ITEMS AND SHALL BE TO THE SATISFACTION OF UTILITY OWNERS.
22. ALL WATER SYSTEM COMPONENTS THAT COME INTO CONTACT WITH DRINKING WATER SHALL CONFORM TO NSF-61.

ARCHITECTURE + ENGINEERING
License No. 26002939 License No. 30900
1230 Oakley Seaver Drive, Suite 200 - Clermont, FL 34711
P: 888-850-FFAE (3323)
www.forefrontae.com
FOREFRONT
Service Beyond Design
Dale E. Long, P.E.
P.E. #55393

UTILITIES PLAN

PAXTON AGING FACILITY
22174 US HWY 331 N, PAXTON, FL 32567
WALTON COUNTY FLORIDA

MUNICIPAL ENGINEERING SERVICES INC
8574 Turkey Bluff Road ◇ Navarre, Florida 32566 ◇ p: (850) 939-5732
CERTIFICATE OF AUTHORIZATION: CA-30886

REVISIONS

ANY DISCREPANCY OR ERROR IN DIMENSIONS OR NOTES SHALL BE BROUGHT TO THE ATTENTION OF THE DESIGN PROFESSIONAL FOR CLARIFICATION PRIOR TO COMMENCEMENT OF CONSTRUCTION.

JOB #: 230001
DATE: AUGUST 2023

C-401

R:\MESI\2023\230001 Paxton Senior Center\DWG\Sheets\30 Site Plan; Plot Date: Thursday, March 28, 2024,3:23:06 PM; Plotted By: mdorman

© FOREFRONT ARCHITECTURE & ENGINEERING LLC 2014 THIS DOCUMENT AND/OR THE DESIGN CONCEPTS EXPRESSED HEREIN ARE THE PROPERTY OF FOREFRONT ARCHITECTURE & ENGINEERING LLC AND ALL RIGHTS OF OWNERSHIP, INCLUDING COPYRIGHT OF INTELLECTUAL PROPERTY, ARE RESERVED. ANY REPRODUCTIONS, COPYING, OR USE OF THIS DOCUMENT AND/OR THE DESIGN CONCEPT WITHOUT THE WRITTEN CONSENT OF FOREFRONT ARCHITECTURE & ENGINEERING LLC IS STRICTLY PROHIBITED AND PROTECTED BY UNITED STATES AND INTERNATIONAL LAW. IF PRINTED ON 11X17 SCALE IS HALF THE SIZE NOTED.

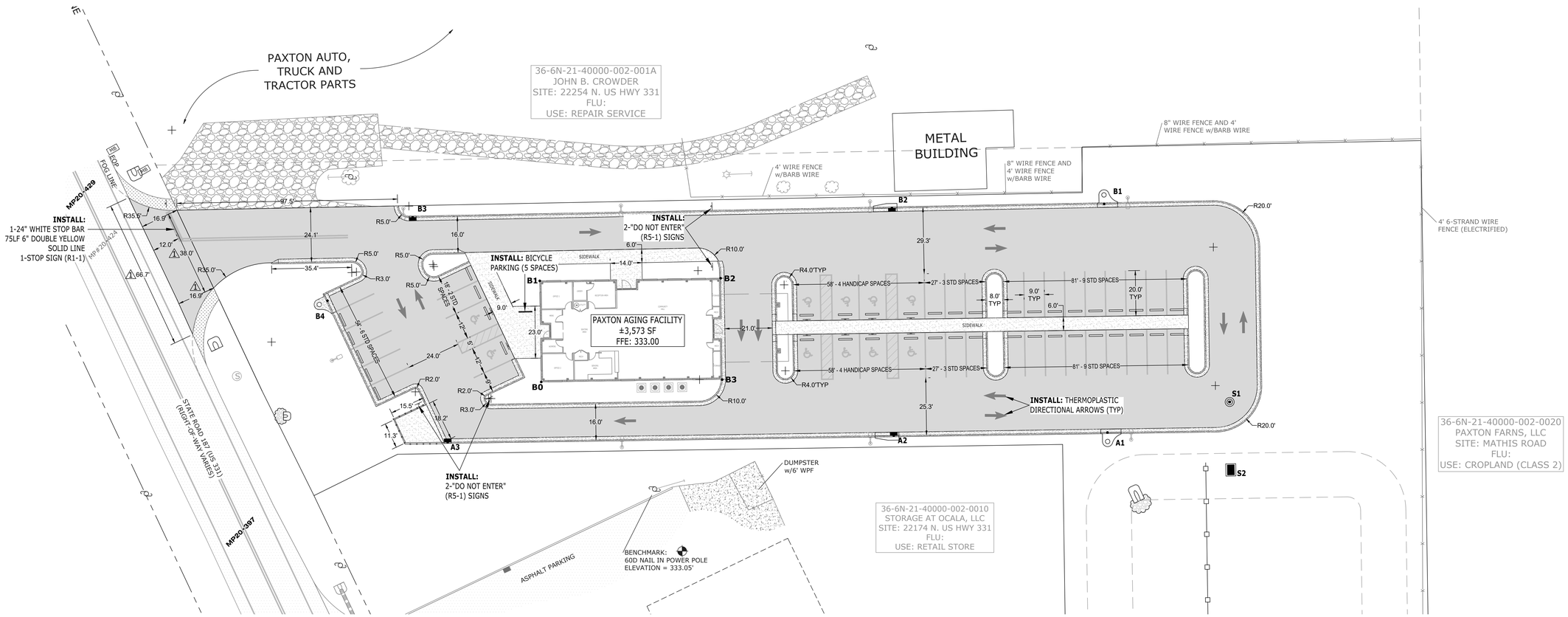

BUILDING CORNERS

POINT	DESCRIPTION	NORTHING	EASTING
B0	SOUTHWEST CORNER	723827.9132	1402921.9187
B1	NORTHWEST CORNER	723872.5749	1402921.2545
B2	NORTHEAST CORNER	723829.0922	1403001.9089
B3	SOUTHEAST CORNER	723873.7534	1403001.2517

STORMWATER STRUCTURES

INLET	DESCRIPTION	NORTHING	EASTING
A1	TYPE 3 INLET SOUTH	723805.6014	1403172.2749
A2	TYPE 5 INLET SOUTH	723804.2083	1403077.7861
A3	TYPE 9 INLET SOUTH	723801.3008	1402880.5595
B1	TYPE 3 INLET NORTH	723906.5529	1403170.7406
B2	TYPE 5 INLET NORTH	723904.7411	1403076.9688
B3	TYPE 9 INLET NORTH	723900.6470	1402865.0777
B4	TYPE 3 INLET WEST	723863.8315	1402827.3956
S1	STORMWATER MANHOLE	723819.0655	1403226.2908
S2	POND OVERFLOW	723789.0693	1403226.8067

BICYCLE PARKING REQUIREMENTS

BICYCLE PARKING = 1 SPACE FOR EVERY 10 SPACES

43/10 = 4.3 => 5 BICYCLE SPACES

PARKING REQUIREMENTS

COMMUNITY RECREATION CENTER = 1 SPACES PER 250 SF OF GFA

3,573/250 = 14.29 =15 SPACES

TOTAL SPACES REQUIRED = 15 SPACES

TOTAL SPACES PROVIDED = 43 SPACES

33 STANDARD SPACES

10 HANDICAP SPACES

* OVERAGE OF PARKING IS PROVIDED FOR SPECIAL EVENT PARKING.

GEOMETRY AND STRIPING NOTES:

1. ALL DIMENSIONS ARE FROM FACE OF CURB UNLESS OTHERWISE NOTED.
2. ALL STRIPING WITHIN THE RIGHT-OF-WAY INCLUDING THE STOP BAR AND DOUBLE YELLOW SOLID LINE (DYSL) SHALL BE THERMOPLASTIC PER F.D.O.T. SPECIFICATIONS AND INDEX #711-001. ALL OTHER INTERIOR ON-SITE STRIPING SHALL BE PAINT UNLESS SPECIFICALLY NOTED OTHERWISE.
3. ALL STRIPING AND SIGNAGE SHALL CONFORM TO THE REQUIREMENTS OF THE MANUAL ON UNIFORM TRAFFIC CONTROL DEVICES (MUTCD), LATEST EDITION.
4. ALL SIGNS SHALL BE INSTALLED PER F.D.O.T. INDEX #700-010 AND #700-101.

GRAPHIC SCALE:

20 10 0 20 40 60

SCALE IN FEET SCALE: 1" = 20'

ARCHITECTURE + ENGINEERING
License No. 30900
License No. 26002939
1230 Oakley Seaver Drive, Suite 200 - Clermont, FL 34711
P: 888-850-FFAE (3323)
www.forefrontae.com
FOREFRONT
Service Beyond Design
Dale E. Long, P.E.
P.E. #55393

GEOMETRY AND STRIPING PLAN

PAXTON AGING FACILITY
22174 US HWY 331 N, PAXTON, FL 32567
WALTON COUNTY FLORIDA

MUNICIPAL ENGINEERING SERVICES INC
8374 Turkey Bluff Road ◦ Navarre, Florida 32566 ◦ p: (850) 939-3732
CERTIFICATE OF AUTHORIZATION: COA-30588

REVISIONS

1	FDOT COMMENT	01-02-2024

ANY DISCREPANCY OR ERROR IN DIMENSIONS OR NOTES SHALL BE BROUGHT TO THE ATTENTION OF THE DESIGN PROFESSIONAL FOR CLARIFICATION PRIOR TO COMMENCEMENT OF CONSTRUCTION.

JOB #: 23001
DATE: AUGUST 2023

C-501

R:\MES\2023\23001 Paxton Senior Center\DWG\Sheets\30 Site Plan; Plot Date: Thursday, March 28, 2024,3:24:35 PM; Plotted By: mdorman

© FOREFRONT ARCHITECTURE & ENGINEERING LLC 2014 THIS DOCUMENT AND/OR THE DESIGN CONCEPTS EXPRESSED HEREIN ARE THE PROPERTY OF FOREFRONT ARCHITECTURE & ENGINEERING LLC AND ALL RIGHTS OF OWNERSHIP, INCLUDING COPYRIGHT OF INTELLECTUAL PROPERTY, ARE RESERVED. ANY REPRODUCTIONS, COPYING, OR USE OF THIS DOCUMENT AND/OR THE DESIGN CONCEPT WITHOUT THE WRITTEN CONSENT OF FOREFRONT ARCHITECTURE & ENGINEERING LLC IS STRICTLY PROHIBITED AND PROTECTED BY UNITED STATES AND INTERNATIONAL LAW. IF PRINTED ON 11X17 SCALE IS HALF THE SIZE NOTED.

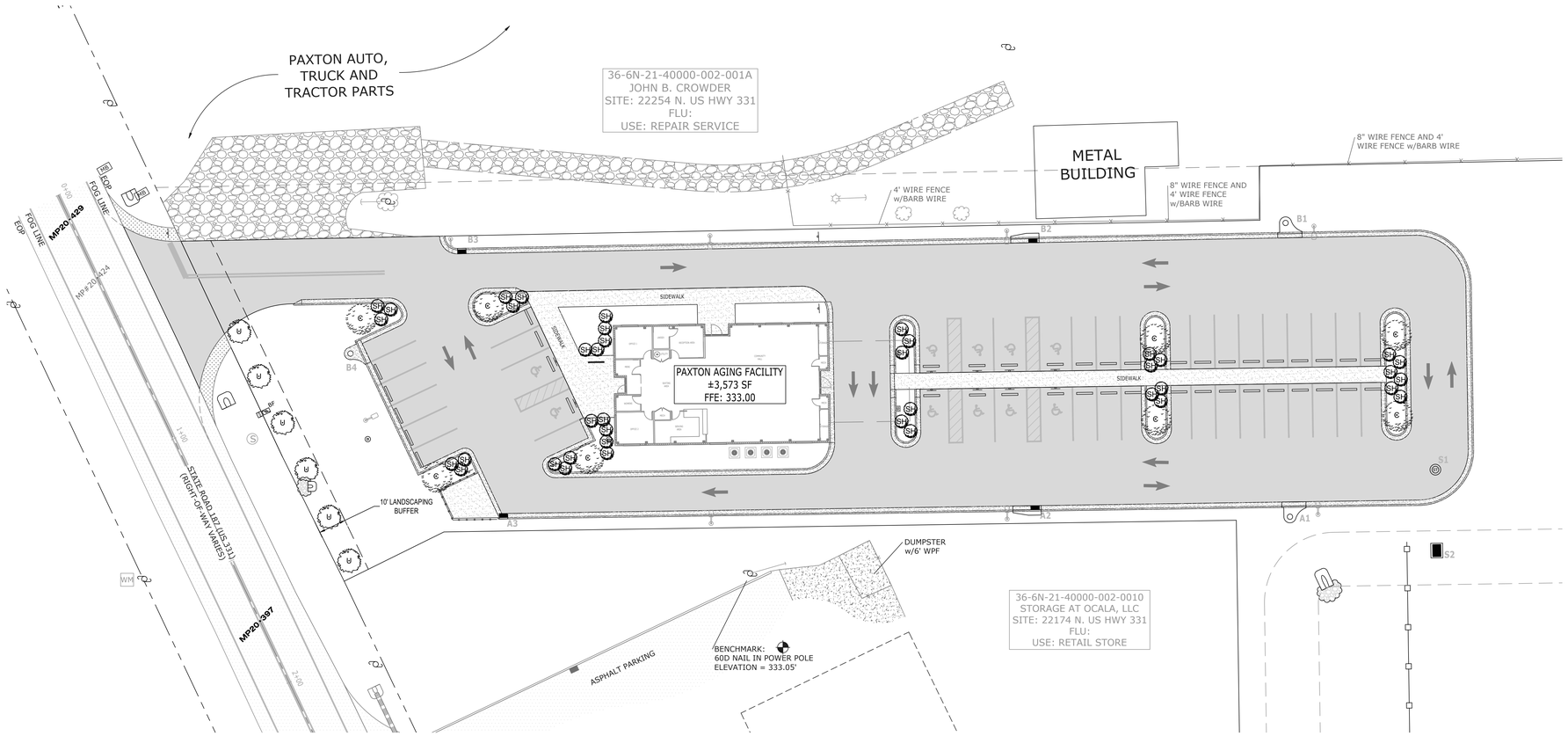

LEGEND

- PROPOSED CANOPY TREE
- PROPOSED UNDERSTORY TREE
- PROPOSED SHRUBS

N

MES INC

GRAPHIC SCALE:

20 10 0 20 40 60

SCALE IN FEET SCALE: 1" = 20'

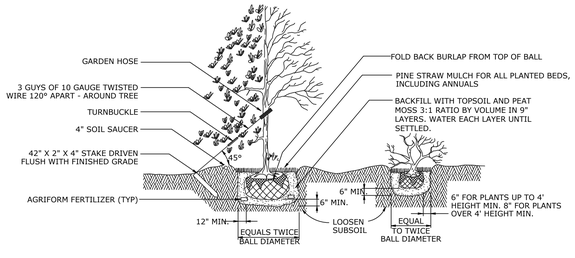

NOTES:

1. ALL PROPOSED TREES SHALL HAVE A MINIMUM HEIGHT OF EIGHT(8) FEET AND A MINIMUM CALIPER OF THREE (3) INCHES AT THE TIME OF PLANTING.
2. PROPOSED MITIGATION TREES SHALL BE A MINIMUM HEIGHT OF EIGHT(8) FEET AT THE TIME OF PLANTING. TREES SHALL BE GRADE "A" USDA PLANT MATERIAL, NATIVE IN SPECIES, AND A CANOPY TREE WITH A MINIMUM THIRTY(30) FOOT MATURE HEIGHT.
3. SHRUBS SHALL BE PLANTED ON 18" TO 24" CENTERS AND SHALL BE A MINIMUM OF 12" IN HEIGHT.

TREE & SHRUB PLANTING DETAILS

NO SCALE

LANDSCAPING AND PLANTING NOTES:

1. PROPOSED PLANTINGS SHOWN ON THIS SHEET SHALL MEET THE WALTON COUNTY LDC REQUIREMENTS AND SHALL BE NATIVE.
2. THE CONTRACTOR WILL BE REQUIRED TO WATER IN ALL PLANTINGS AND IRRIGATION WILL BE PROVIDED VIA WATER HOSES OR WATER TRUCKS UNTIL THE PLANTS ARE PROVEN TO BE ALIVE AND GROWING.
3. THE PLANTING CONTRACTOR SHALL PROVIDE NATIVE FLORIDA NURSERY GROWN STOCK SUPPLIED BY A FLORIDA NATIVE PLANT SUPPLIER OR IF BARE ROOT MATERIAL IS SELECTED IT WILL BE COLLECTED FROM A STATE APPROVED COLLECTION SITE.
4. PLANT MATERIAL SHALL BE CONTAINER GROWN OR BARE ROOT STOCK. IF THE PLANT MATERIALS ARE BARE ROOT, THE PLANT MATERIAL (PARTICULARLY THE ROOT SYSTEM) SHALL BE KEPT SUFFICIENTLY MOIST AND THOROUGHLY WRAPPED IN CLOTH, BURLAP OR NEWSPAPER FROM THE TIME THE PLANTS ARE HARVESTED FROM THE NURSERY UNTIL THE TIME THE PLANTS ARE TRANSPORTED TO THE PROJECT SITE AND REPLANTED.
5. THE PLANTING CONTRACTOR IS RESPONSIBLE FOR DELIVERY OF PLANT MATERIALS TO THE PROJECT SITE. MATERIALS SHALL BE PROTECTED FORM DETERIORATION DURING DELIVERY FROM THE NURSERY AND DURING STORAGE ON THE PROJECT SITE PRIOR TO INSTALLATION.
6. PLANTS SHOULD BE INSTALLED IMMEDIATELY FOLLOWING DELIVERY TO THE PROJECT SITE. IF PLANTING IS DELAYED FOR MORE THAN THREE (3) HOURS AFTER DELIVERY TO THE PROJECT SITE, PLANTINGS ARE TO BE PLACED IN THE SHADE AND PROTECTED FROM ADVERSE WEATHER AND MECHANICAL DAMAGE. ROOTS ARE TO BE KEPT MOIST BY COVERING WITH BURLAP, MULCH, OR OTHER ACCEPTABLE MEANS OF RETAINING MOISTURE.
7. CONTAINER GROWN STOCK SHALL NOT BE REMOVED FROM CONTAINERS UNTIL PLANTING TIME.
8. THE PLANTING CONTRACTOR SHALL KEEP THE PROJECT SITE CLEAN AND FREE OF ACCUMULATED SURPLUS AND DISCARDED PLANT MATERIAL DURING THE PROGRESS OF PLANTING.
9. THE CONTRACTOR SHALL PHASE CONSTRUCTION OPERATIONS SO THAT AREAS THAT REQUIRE PLANTING WILL BE READY FOR INSTALLATION OF PLANTS AS EARLY AS POSSIBLE IN THE FIRST OPTIMUM PLANTING SEASON. PLANTING WILL COMMENCE IMMEDIATELY UPON COMPLETION AND UPON APPROVAL OF THE PRE-PLANTING GRADING OF THE AREA BY THE PLANTING CONTRACTOR AND THE PROJECT ENGINEER.
10. PLANT MATERIAL SHALL BE INSTALLED WITHIN 24 HOURS AFTER DELIVERY TO THE SITE. IF NECESSARY, PLANT MATERIALS CAN BE TEMPORARILY STORED ON SITE, BUT ALL PLANT MATERIALS SHALL BE KEPT WATERED AND SHADED.
11. THE CONTRACTOR SHALL ENSURE THAT ALL WORKMEN EMPLOYED BY HIM ARE COMPETENT, CAREFUL, RELIABLE, AND MUST HAVE SUFFICIENT SKILL AND EXPERIENCE TO PROPERLY PERFORM THE WORK ASSIGNED TO THEM. ALL WORKMEN ASSIGNED TO MITIGATION WORK, SUCH AS OBTAINING DESIGN ELEVATIONS, INSTALLING PLANT MATERIAL ACCORDING TO DESIGN, AND IDENTIFYING NUISANCE/EXOTIC VEGETATION, SHALL HAVE HAD SUFFICIENT EXPERIENCE AND LICENSURE (WHERE APPLICABLE) IN SUCH WORK TO PERFORM IT PROPERLY AND SATISFACTORILY AND TO OPERATE EQUIPMENT INVOLVED, AND SHALL MAKE DUE AND PROPER EFFORT TO EXECUTE THE WORK IN THE MANNER PRESCRIBED IN THE SPECIFICATIONS, OR THE ENVIRONMENTAL PERMITS.
12. REQUIRED TREES AND SHRUBBERY SHALL BE PLANTED IN LOCATIONS AS SHOWN ON PLANS. SPACING AND SPECIES SHALL BE BY OTHERS BUT ALL PLANTINGS SHALL BE DROUGHT TOLERANT, NATIVE, AND OF THE SPECIES.
13. ALL EXISTING LANDSCAPING IN BUFFER AREAS DISTURBED DURING CONSTRUCTION SHALL BE REPLACED AS NEEDED TO MAINTAIN MIN. REQUIREMENTS AS SHOWN ON PLANS.
14. ALL LANDSCAPING SHALL BE PLACED WITHIN PROPERTY BOUNDARIES. NO LANDSCAPING SHALL BE PLACED WITHIN THE COUNTY RIGHT-OF-WAY.
15. GROUND COVER SPECIES SHALL HAVE A MINIMUM MATURE HEIGHT OF 24 INCHES AND A MAXIMUM HEIGHT OF 30 INCHES.
16. SEE LEGEND FOR EXISTING AND PROPOSED LANDSCAPING SYMBOLS.
17. ALL AREAS OF THE SITE THAT DO NOT CONTAIN GRASS OR LANDSCAPING PRIOR TO, OR AFTER CONSTRUCTION SHALL BE DISCED, SEEDED AND MULCHED, HYDROSEEDED, OR SODDED. THE CONTRACTOR SHALL ENSURE THAT THE ENTIRE SITE IS STABILIZED AND THAT ANY ERODED AREAS, ANYWHERE ON SITE, ARE REMEDIED. UNLESS OTHERWISE SPECIFIED, GRASSING SHALL BE NATIVE AND DROUGHT TOLERANT CENTIPEDE.
18. MINIMUM SIZE OF PLANT MATERIAL. ALL NEWLY PLANTED LANDSCAPE MATERIAL TO MEET THE REQUIREMENTS OF THIS LAND DEVELOPMENT CODE SHALL CONFORM TO THE LATEST VERSION OF THE AMERICAN STANDARD NURSERY STOCK (ANSI Z60.1). UNLESS OTHERWISE SPECIFIED IN THE LAND DEVELOPMENT CODE, THE FOLLOWING MINIMUM SIZE REQUIREMENTS APPLY TO ALL PLANTED MATERIAL:
    a. CANOPY TREES (TYPE 1 AND TYPE 2 SHADE TREES) SHALL BE A MINIMUM OF 3 INCHES CALIPER.
    b. EVERGREEN CANOPY TREES SHALL BE A MINIMUM HEIGHT OF 8 FEET.
    c. UNDER STORY TREES SHALL BE A MINIMUM OF # 15 CONTAINER CLASS.
    d. ALL SHRUBS AND ACCENT PLANTS SHALL BE A MINIMUM OF # 3 CONTAINER CLASS.
    e. ALL GROUNDCOVER PLANTS SHALL BE A MINIMUM OF # 1 CONTAIN CLASS.

ROADWAY FRONTAGE LANDSCAPING

FRONTAGE LENGTH = 140 LF
PLANTINGS REQUIRED = 1 TREE PER 25' OF FRONTAGE
TREES REQUIRED = 140/25 = 5.6 => 6 TREES
NOTE: ALL PLANTED TREES WILL BE UNDERSTORY IN ORDER TO PREVENT CONFLICTS WITH OVERHEAD UTILITIES.

BUILDING FRONTAGE LANDSCAPING

1 SHRUB/FIVE FEET OF FRONTAGE ADJACENT TO PARKING OR PUBLIC STREET
WEST FRONTAGE = 45'/5 = 9 SHRUBS

ARCHITECTURE + ENGINEERING
License No. 30900
1230 Oakley Seaver Drive, Suite 200 - Clermont, FL 34711
P: 888-850-FFAE (3323)
www.forefrontae.com
FOREFRONT
Service Beyond Design
Dale E. Long, P.E.
P.E. #55393

LANDSCAPING PLAN

PAXTON AGING FACILITY
22174 US HWY 331 N, PAXTON, FL 32567
WALTON COUNTY FLORIDA

MUNICIPAL ENGINEERING SERVICES INC
8374 Turkey Bluff Road - Navarre, Florida 32566 - P: (850) 936-9732
CERTIFICATE OF AUTHORIZATION #29-00088

REVISIONS

ANY DISCREPANCY OR ERROR IN DIMENSIONS OR NOTES SHALL BE BROUGHT TO THE ATTENTION OF THE DESIGN PROFESSIONAL FOR CLARIFICATION PRIOR TO COMMENCEMENT OF CONSTRUCTION.

JOB #: 230001
DATE: AUGUST 2023

C-601

© FOREFRONT ARCHITECTURE & ENGINEERING LLC 2014 THIS DOCUMENT AND/OR THE DESIGN CONCEPTS EXPRESSED HEREIN ARE THE PROPERTY OF FOREFRONT ARCHITECTURE & ENGINEERING LLC AND ALL RIGHTS OF OWNERSHIP, INCLUDING COPYRIGHT OF INTELLECTUAL PROPERTY, ARE RESERVED. ANY REPRODUCTIONS, COPYING, OR USE OF THIS DOCUMENT AND/OR THE DESIGN CONCEPT WITHOUT THE WRITTEN CONSENT OF FOREFRONT ARCHITECTURE & ENGINEERING LLC IS STRICTLY PROHIBITED AND PROTECTED BY UNITED STATES AND INTERNATIONAL LAW. IF PRINTED ON 11X17 SCALE IS HALF THE SIZE NOTED.

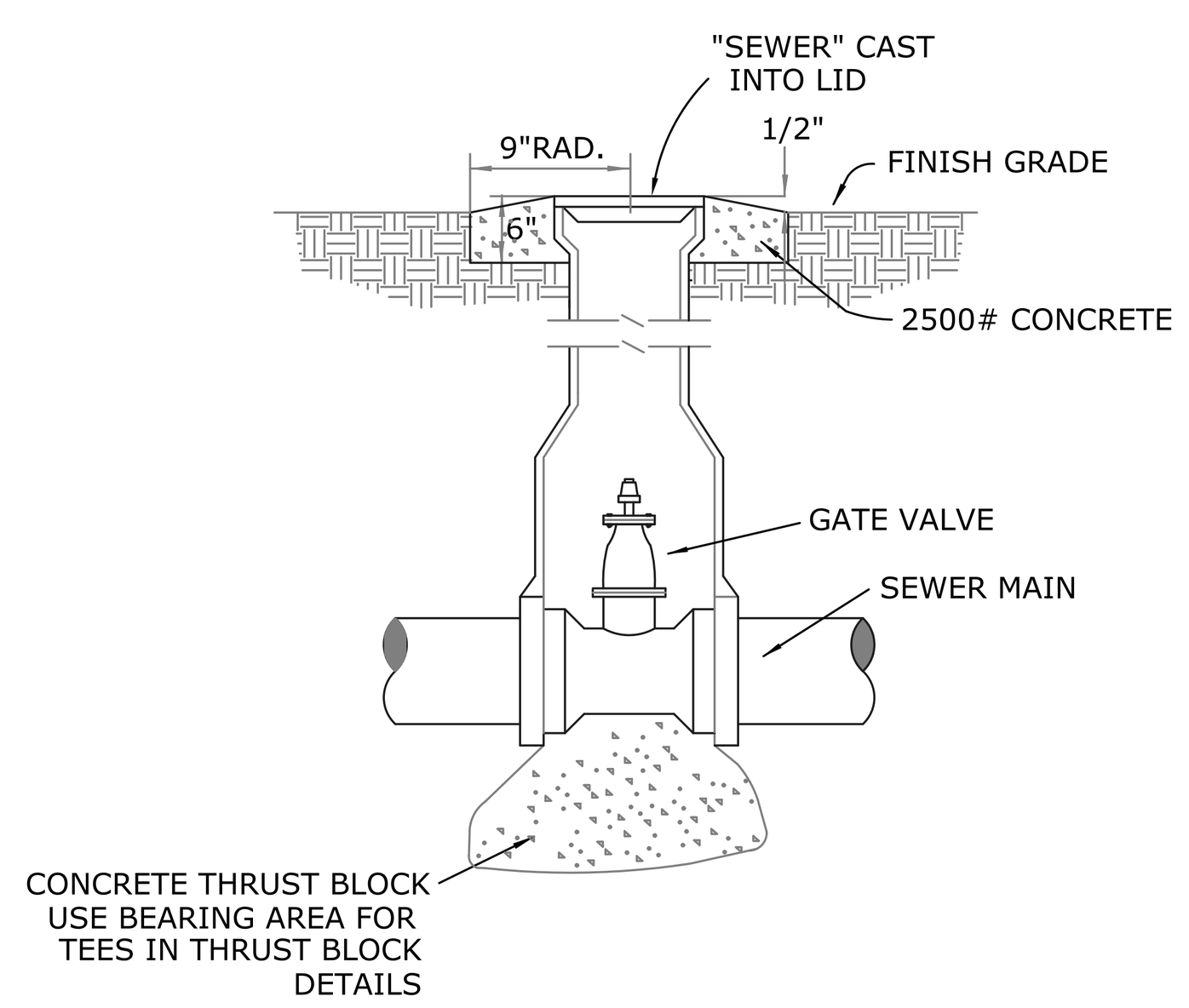

VALVE BOX SETTING
NOT TO SCALE

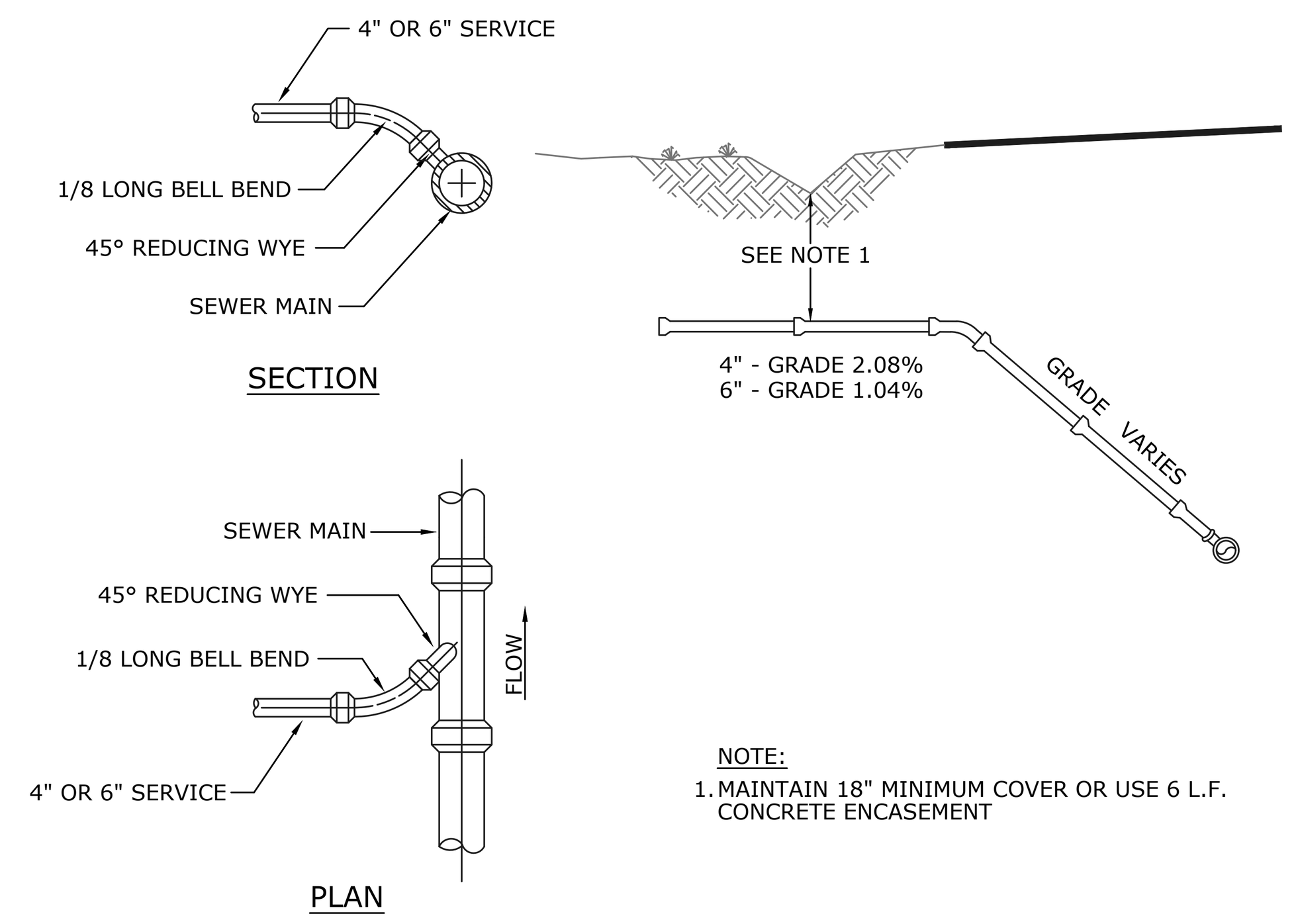

NOTE:
1. MAINTAIN 18" MINIMUM COVER OR USE 6 L.F. CONCRETE ENCASEMENT

TYPICAL LATERAL SEWER CONNECTION
NOT TO SCALE

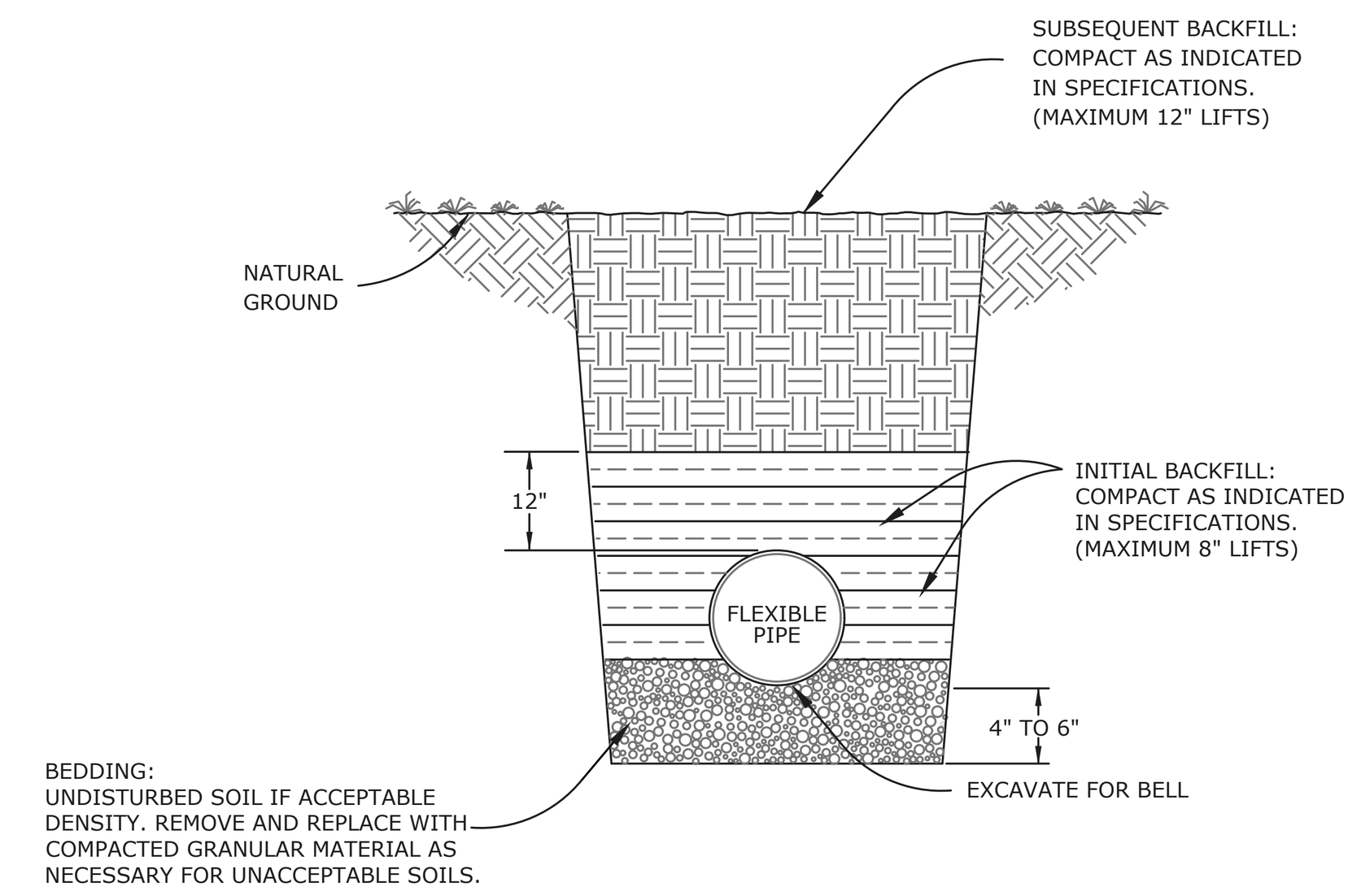

FLEXIBLE PIPE BEDDING DETAIL
NOT TO SCALE

NOTES:

1. CONCRETE SHALL BE 4000 P.S.I. MINIMUM.
2. FOR PEDESTRIAN TRAFFIC AREAS PROVIDE 8" STABILIZED SUBBASE COMPACTED TO 95% MODIFIED PROCTOR.

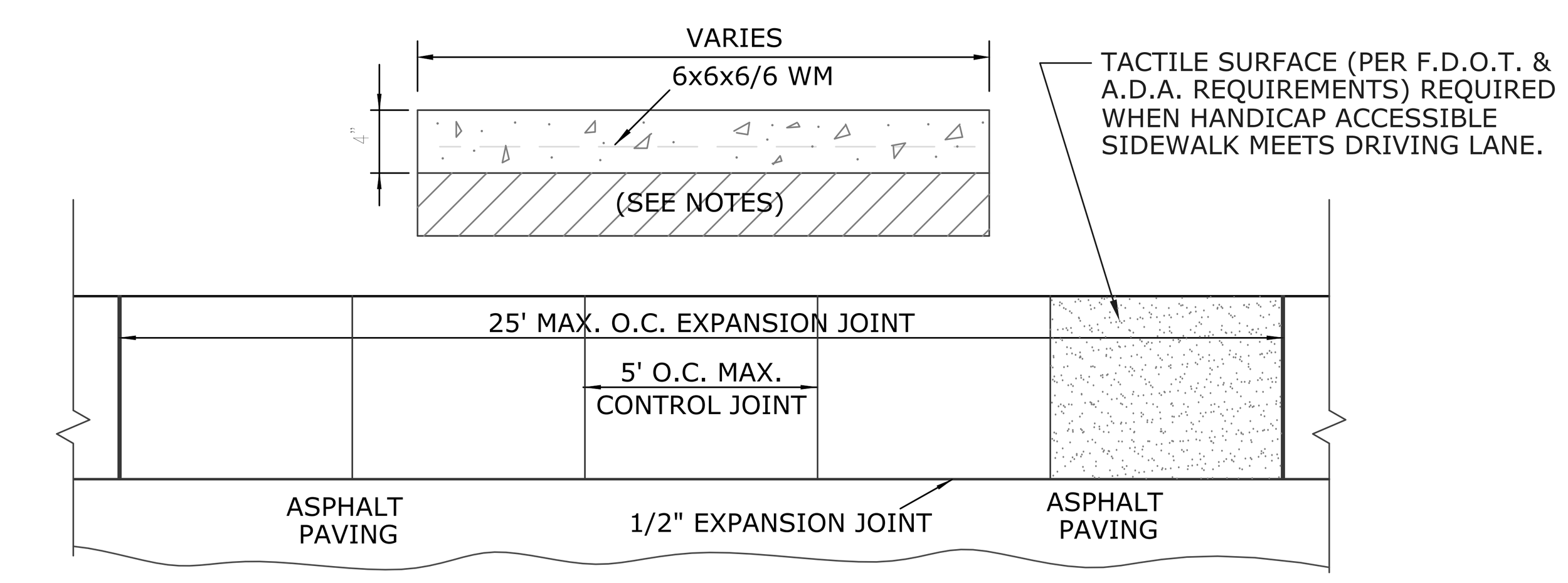

CONCRETE SIDEWALK DETAIL
NOT TO SCALE

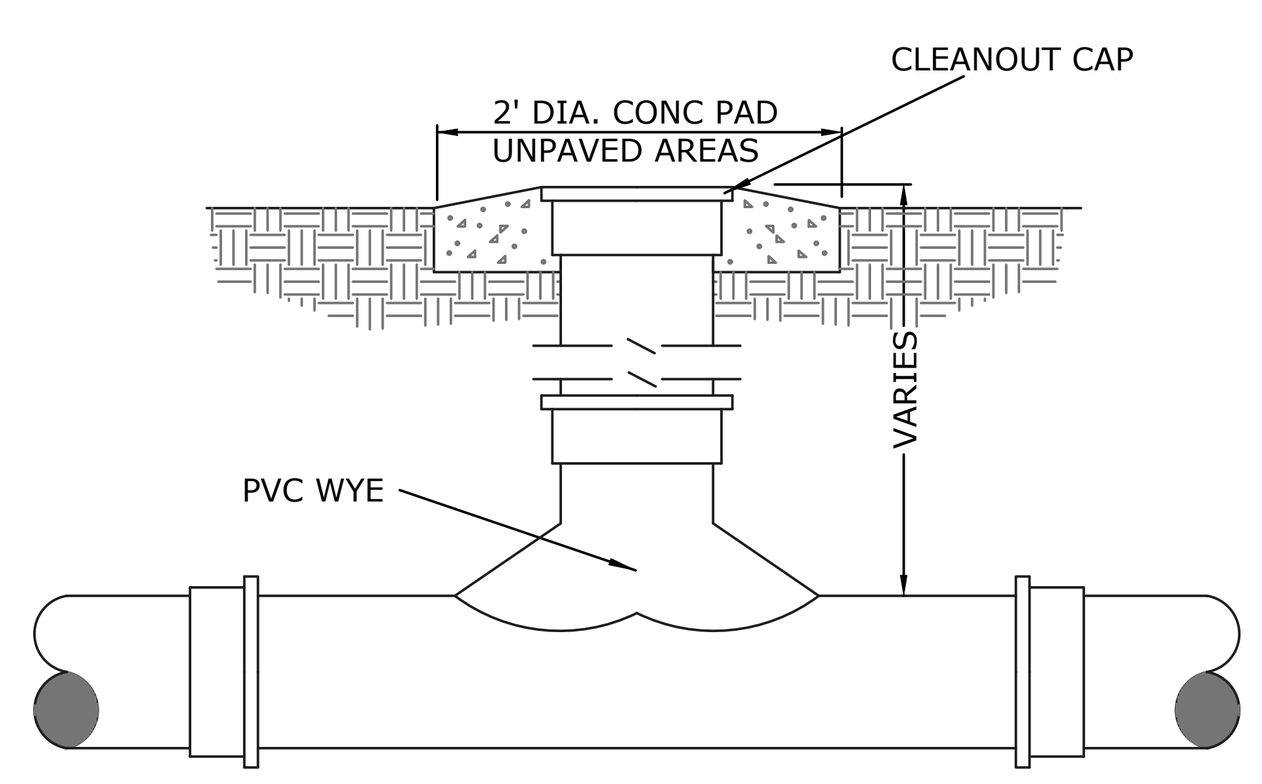

NOTES:
1. VERTICAL PORTIONS SHALL BE NON-PERFORATED.
2. CLEAN-OUT CAP SHALL BE WATER-TIGHT.
3. CLEAN-OUTS SHALL INCORPORATE FITTINGS (WYE FITTINGS OR BENDS) THAT HAVE AN ANGLE NO LESS THAN 45° AS MEASURED FROM THE UPSTREAM END OF THE FILTER PIPES.
4. CLEAN-OUT CAP SHALL BE IRON FERRULE w/ BRASS COUNTERSUNK SCREW PLUG IN ALL PAVED AREAS. PVC SCREW-CAP IS ACCEPTABLE IN UNPAVED AREAS.

TWO-WAY CLEAN-OUT DETAIL
NOT TO SCALE

PIPE SIZE AND TYPE	HORIZONTAL BENDS				DEAD ENDS	EQUAL TEES See note 3
	90 Deg.	45 Deg.	22.5 Deg.	11.25 Deg.		
3" DI	18	8	4	2	33	1
4" DI	22	9	4	2	39	1
6" DI	31	13	6	3	55	1
8" DI	40	17	8	4	72	1
10" DI	48	20	9	5	86	1
12" DI	56	23	11	5	101	1
16" DI	70	29	14	7	129	1
20" DI	84	35	17	8	156	18
24" DI	96	40	19	9	181	41
4" PVC	28	12	6	3	62	1
6" PVC	39	16	8	4	87	1
8" PVC	50	21	10	5	114	1
10" PVC	60	25	12	6	136	1
12" PVC	70	29	14	7	160	1
16" PVC	88	36	17	9	205	1
20" PVC	105	43	21	10	247	29
24" PVC	120	50	24	12	287	64

SHOWING DISTANCES IN FEET FROM THE FITTING TO BE RESTRAINED TO THE LAST RESTRAINING GLAND REQUIRED

NOTES :
1. TEST PRESSURE = 150 PSI, SOIL GROUP = SM, TRENCH TYPE = 3, DEPTH = 2.5', SAFETY FACTOR = 2
2. RESTRAINED LENGTHS FOR VERTICAL OFFSETS, REDUCERS & UNEQUAL SIZE TEES MUST BE INDIVIDUALLY CALCULATED.
3. WITH EQUAL TEES, THE DISTANCES SHOWN ARE WITH A RUN LENGTH OF 40' AS AN EXAMPLE ONLY. FOR OTHER LENGTHS AND FOR UNEQUAL TEES, INDIVIDUAL CALCULATIONS MUST BE MADE.
4. ALL DEAD ENDS SHALL BE CONSTRUCTED WITH MECHANICAL JOINT RESTRAINTS AND THRUST BLOCKS.

PIPE JOINT RESTRAINT TABULATION
NOT TO SCALE

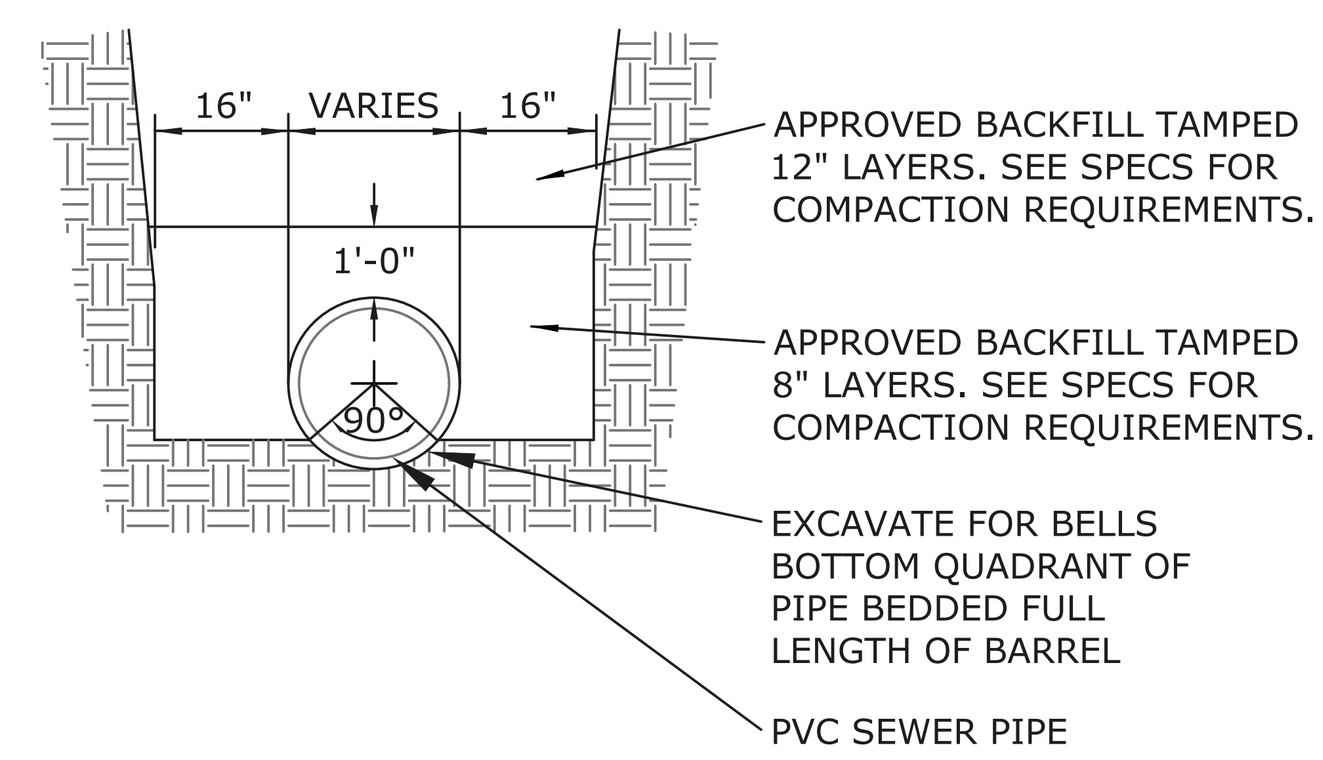

PIPE BEDDING DETAIL
NOT TO SCALE

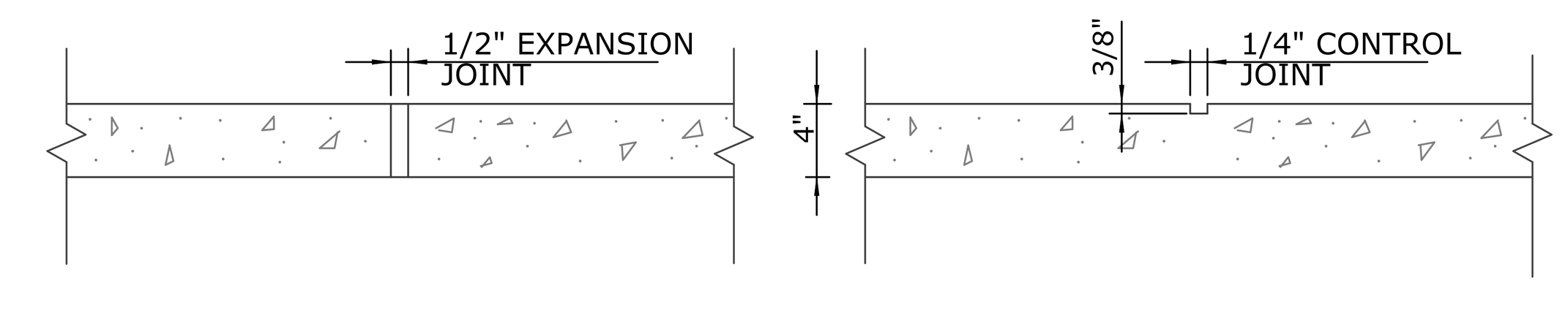

CONCRETE CONTROL JOINT DETAIL
NOT TO SCALE

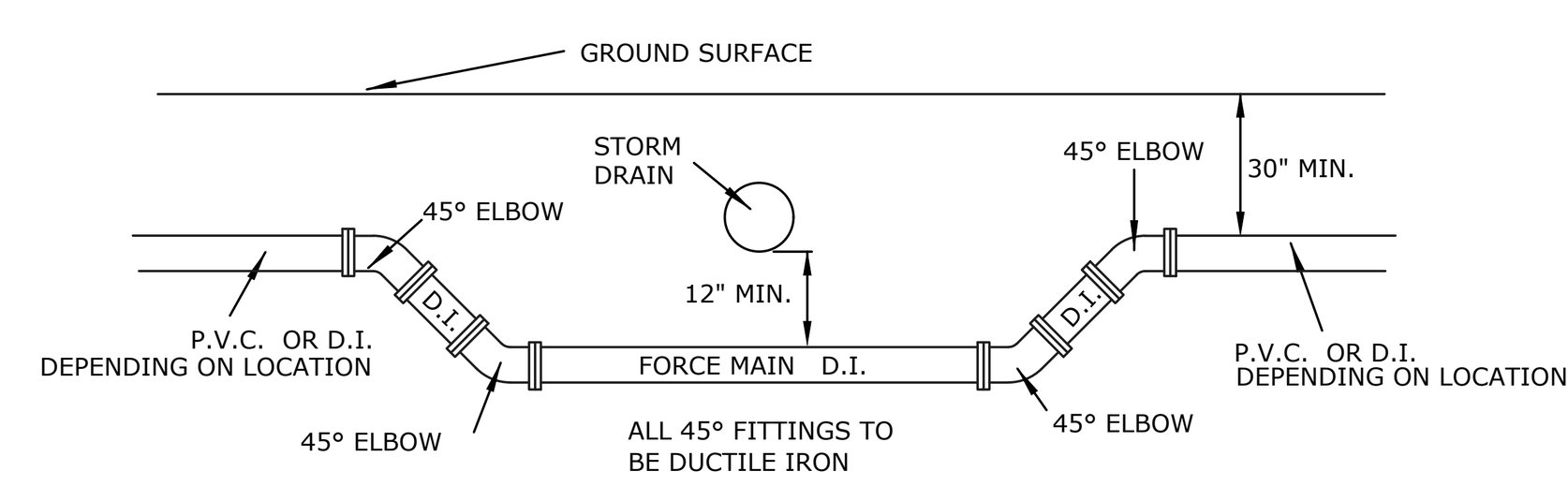

NOTE:
1. THIS NOTE IS APPLICABLE TO ALL UTILITY CROSSINGS INCLUDING STORM WATER PIPES AND SHALL BE APPLIED IF GRADUAL LOWERING OF THE NEW MAIN IS NOT POSSIBLE TO ACHIEVE THE REQUIRED CLEARANCE.

SANITARY FORCE MAIN CROSSING
NOT TO SCALE

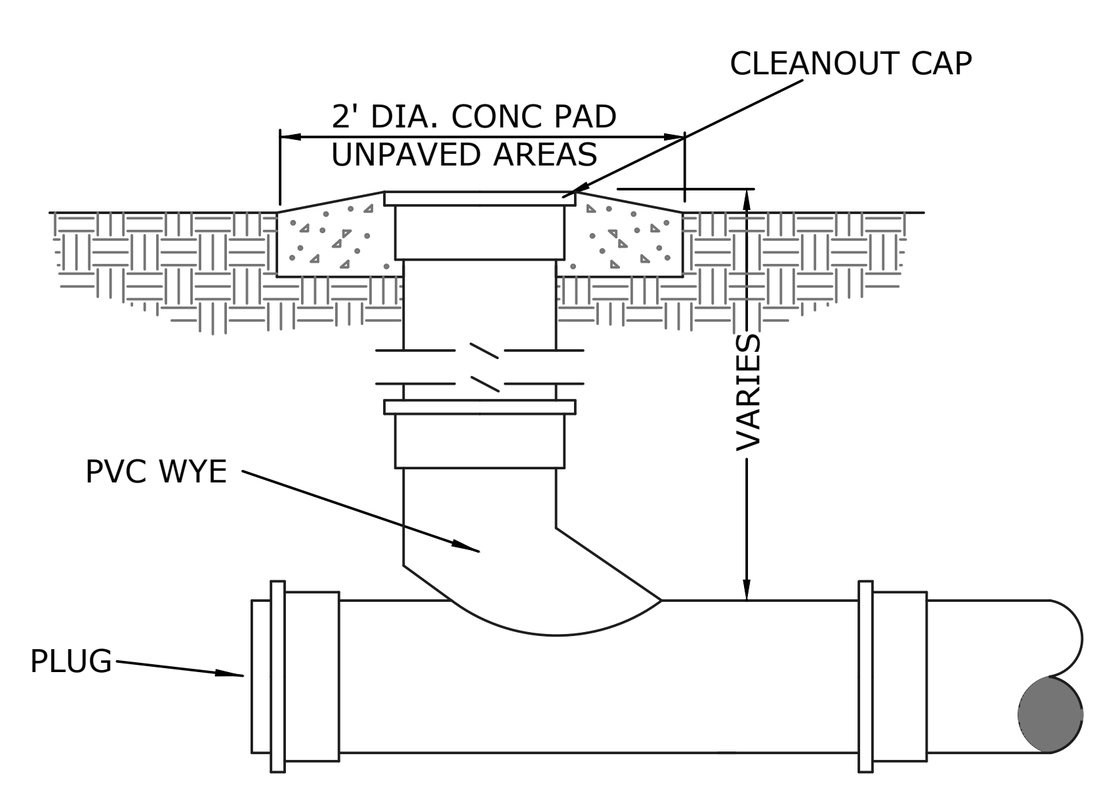

NOTES:
1. VERTICAL PORTIONS SHALL BE NON-PERFORATED.
2. CLEAN-OUT CAP SHALL BE WATER-TIGHT.
3. CLEAN-OUTS SHALL INCORPORATE FITTINGS (WYE FITTINGS OR BENDS) THAT HAVE AN ANGLE NO LESS THAN 45° AS MEASURED FROM THE UPSTREAM END OF THE FILTER PIPES.
4. CLEAN-OUT CAP SHALL BE IRON FERRULE w/ BRASS COUNTERSUNK SCREW PLUG IN ALL PAVED AREAS. PVC SCREW-CAP IS ACCEPTABLE IN UNPAVED AREAS.

ONE-WAY CLEAN-OUT DETAIL
NOT TO SCALE

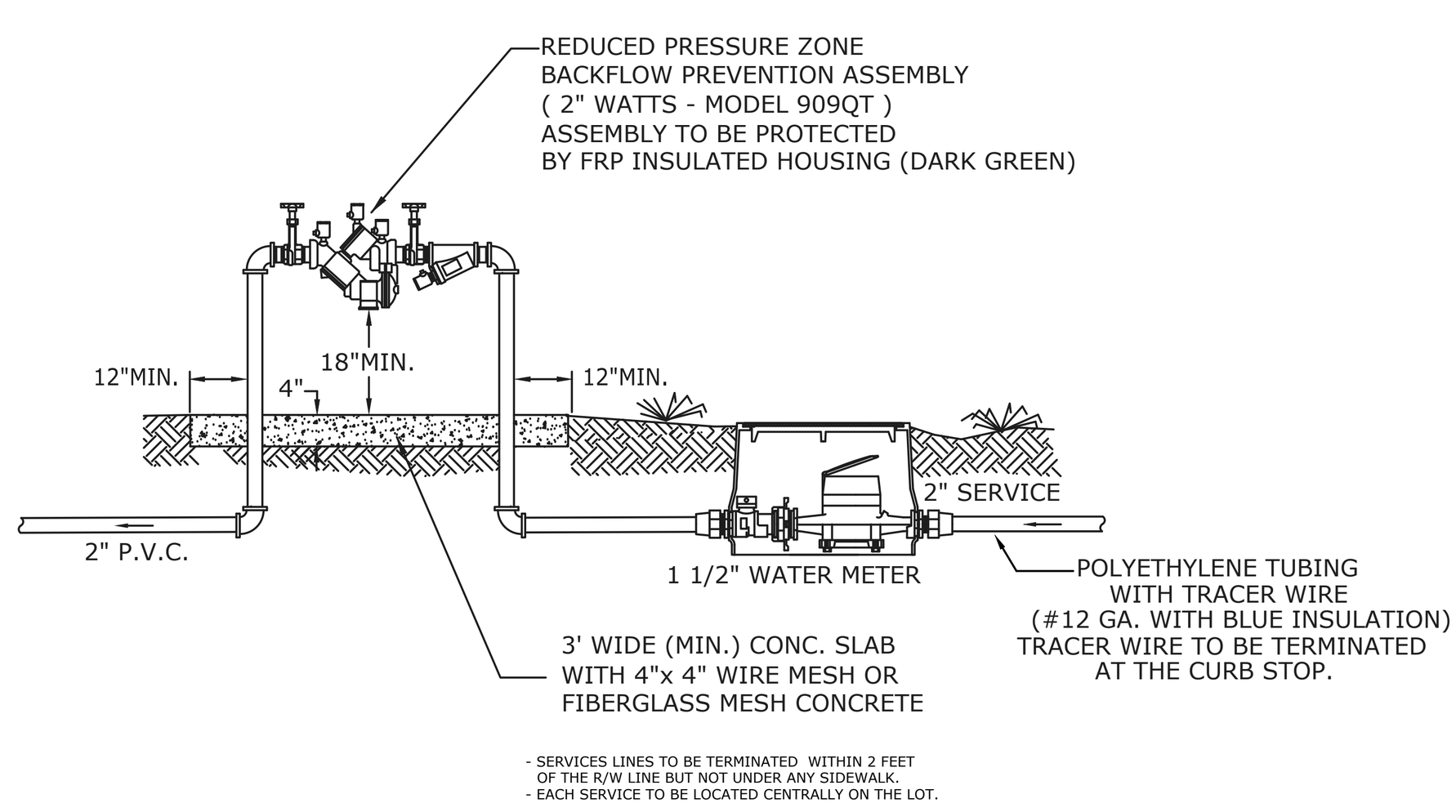

TYPICAL WATER SERVICE

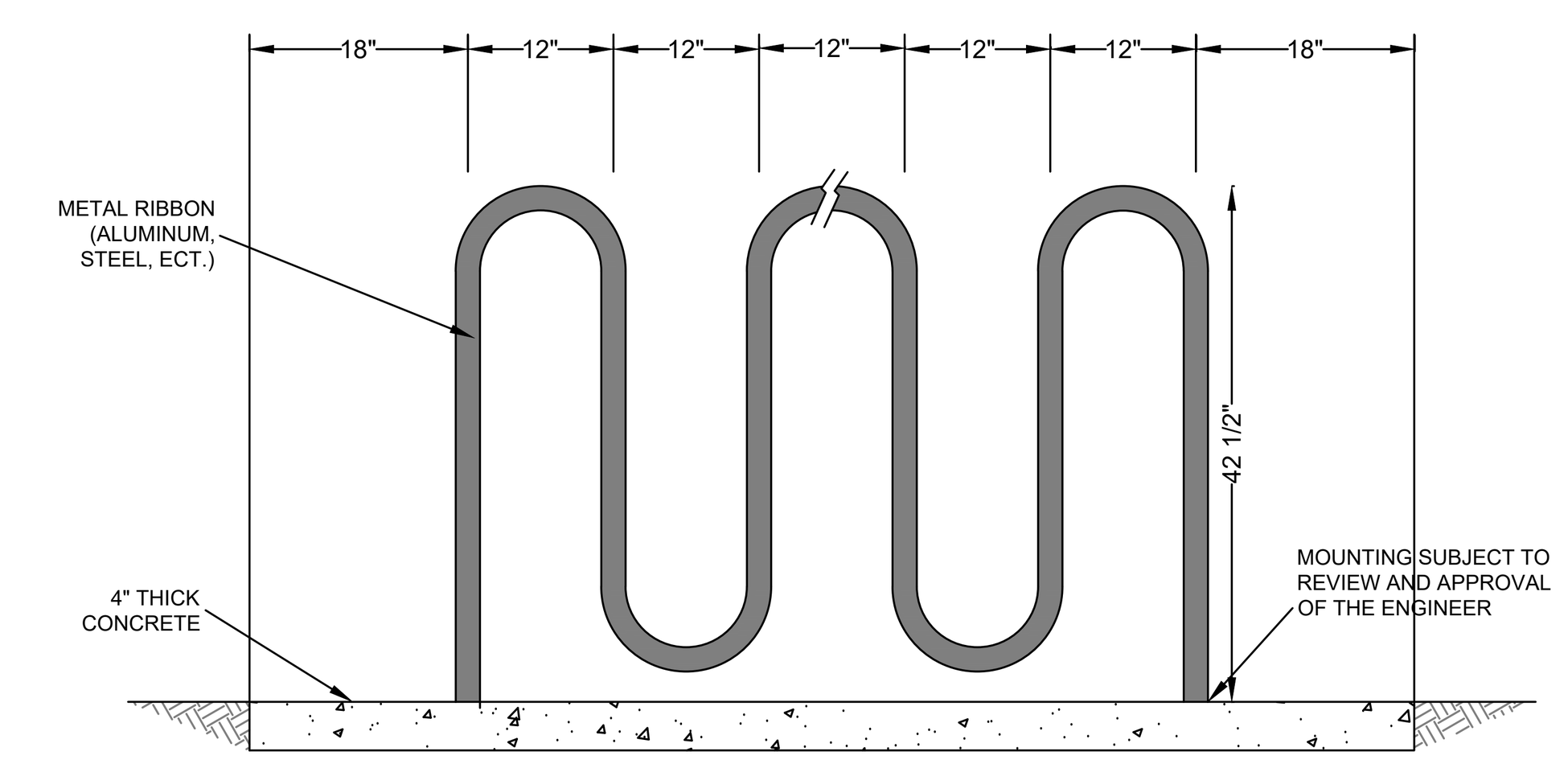

NOTES:
1. BICYCLE PARKING SHALL BE LOCATED AS NEAR TO THE PRINCIPLE ENTRANCE OF THE BUILDING AS PRACTICABLE.
2. EACH BICYCLE SPACE SHALL BE A MINIMUM OF 2' WIDE AND 6' LONG.
3. BICYCLE PARKING SHALL BE LOCATED SO AS NOT TO IMPEDE PEDESTRIAN MOVEMENT.
4. CONCRETE PAD CONSTRUCTION SHALL BE AS NOTED IN SIDEWALK DETAILS.

BICYCLE PARKING
NOT TO SCALE

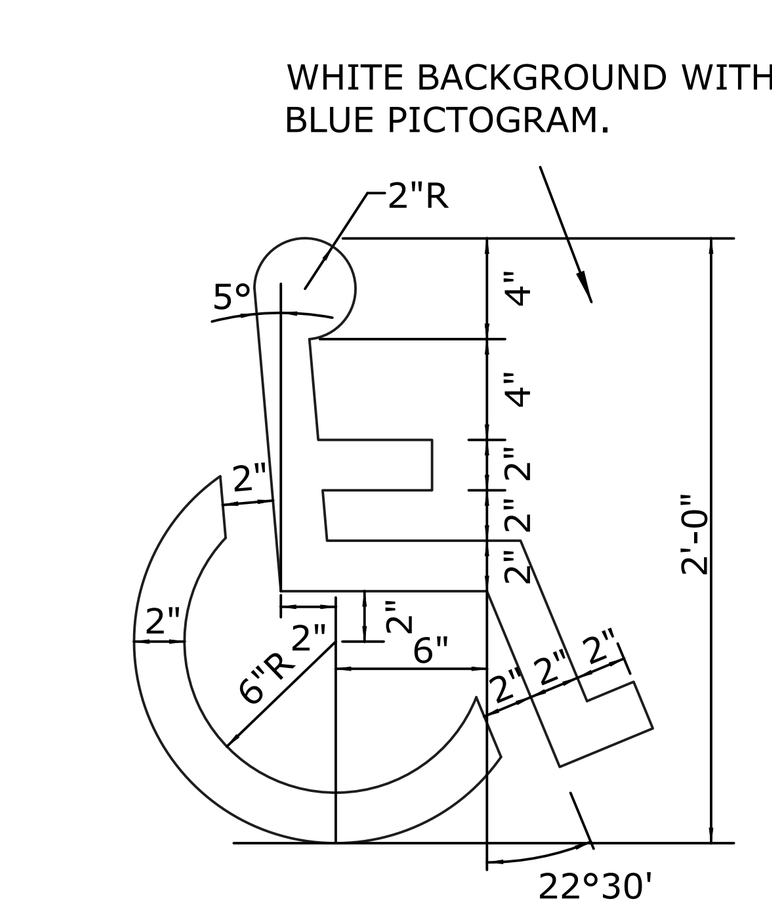

HANDICAP EMBLEM DETAIL
NOT TO SCALE

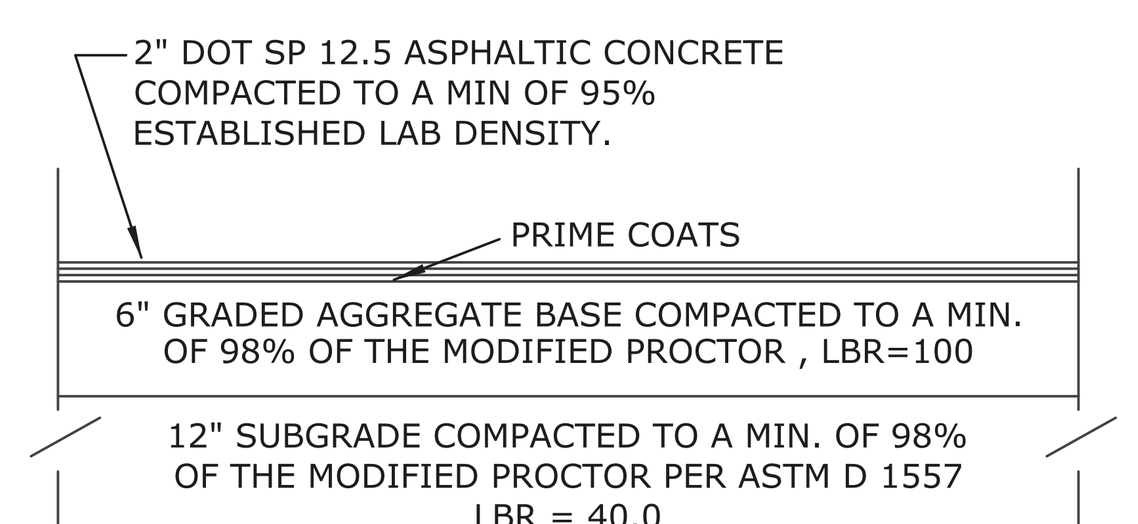

STANDARD PAVING SECTION
NOT TO SCALE

NOTES:
1. NEW PIPE SHALL BE CAPPED OR PLUGGED FOR PRESSURE TEST. ONCE TEST IS SATISFACTORILY COMPLETED NEW MAIN IS TO BE CONNECTED TO EXISTING MAIN.
2. THE CONTRACTOR SHALL FLUSH LINE PRIOR TO STARTING THE CHLORINATION PROCEDURE. ALL FLUSHING SHALL BE DONE THROUGH THE EXISTING VALVE WITH ALL HYDRANTS AND SERVICE LINES OPEN. ONCE FLUSHING IS COMPLETE THE INSPECTOR SHALL CLOSE THE VALVE.
3. ONCE SATISFACTORY BACTERIOLOGICAL SAMPLES ARE OBTAINED THE CONTRACTOR SHALL CLOSE BOTH CORPORATION STOPS AND REMOVE SERVICE TUBING, PUMP AND BACK FLOW PREVENTER; CAP CORPORATION STOPS WITH BRASS CAPS.
4. CONTRACTOR SHALL FURNISH ALL MATERIALS, EQUIPMENT AND LABOR NECESSARY FOR FILLING, CHLORINATING AND TESTING PROCEDURES.
5. IF 20' STUB OUT IS NOT PRESENT SPECIAL ARRANGEMENTS WILL HAVE TO BE MADE TO DEPRESSURIZE THE EXISTING MAIN TO MAKE CONNECTION TO THE EXISTING VALVE.

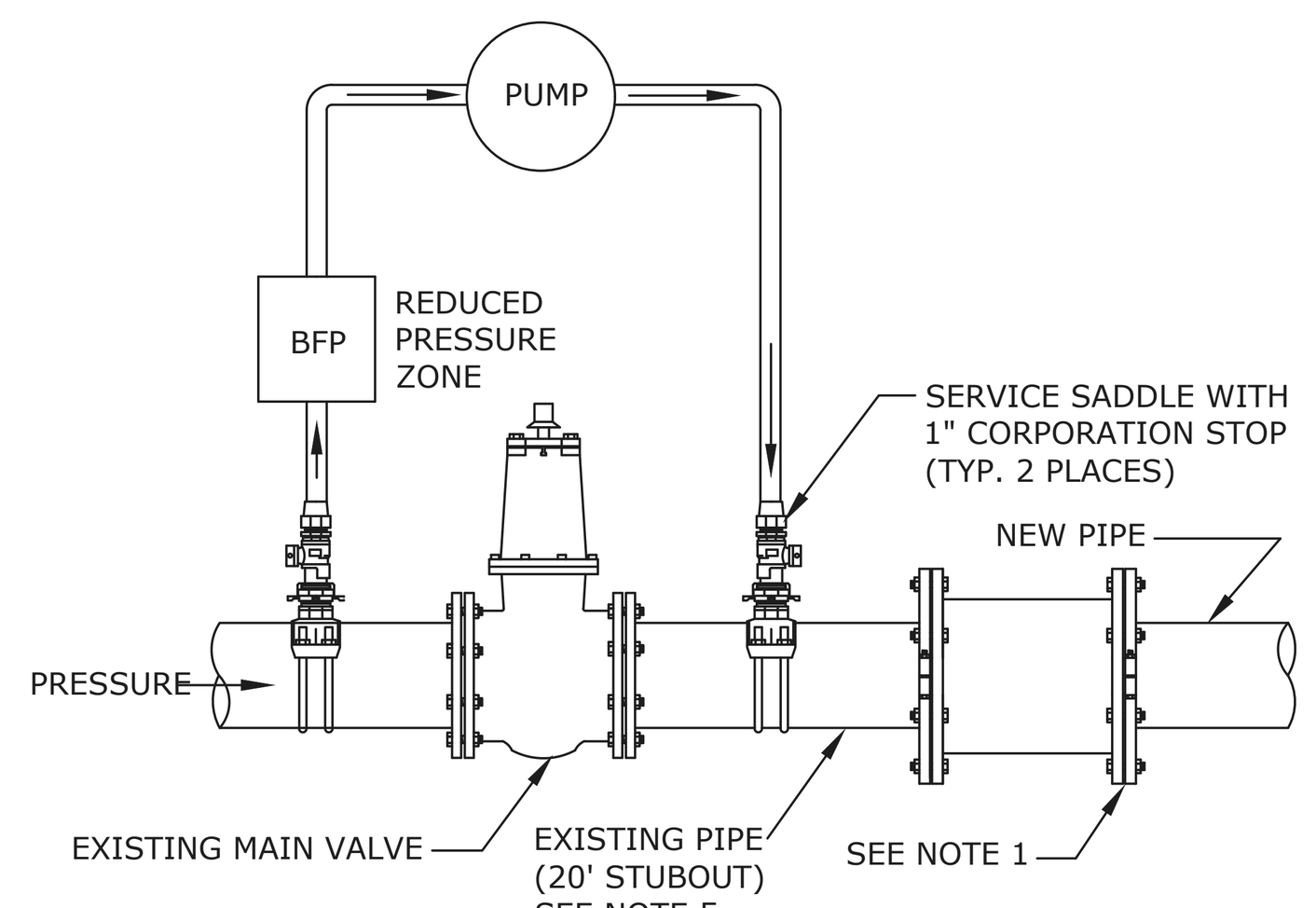

TYPICAL CONNECTION FOR NEW LINE FILLING, PRESSURE TESTING, FLUSHING AND CHLORINATION. (EXISTING STUBOUT)

TYPICAL DISINFECTION & CHLORINATION
NOT TO SCALE

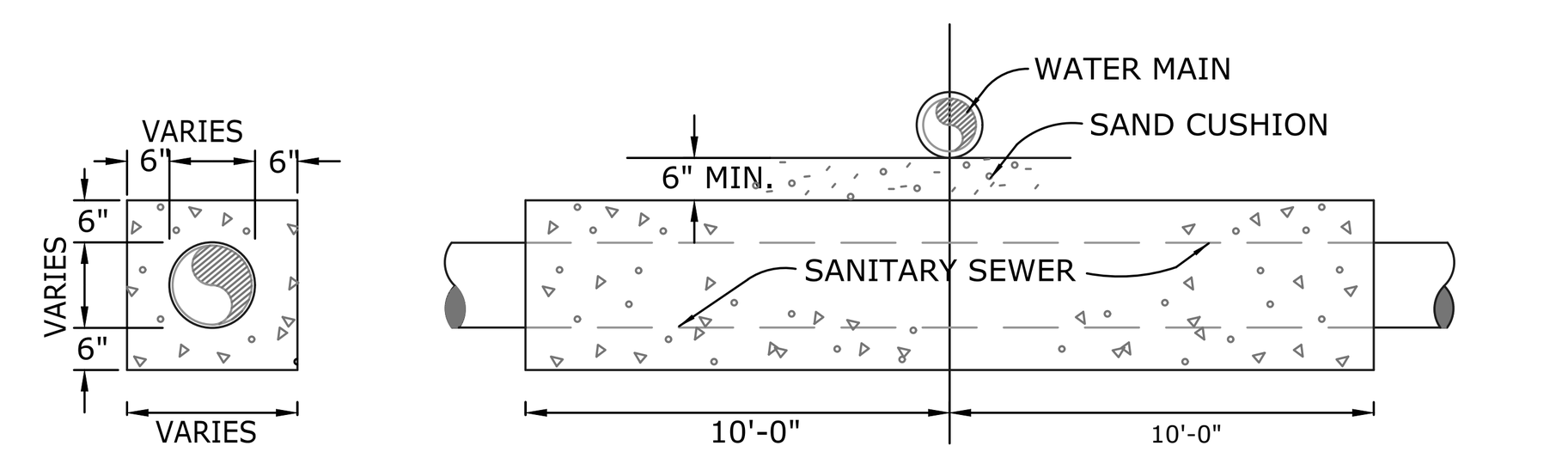

NOTES:
PIPE CROSSING -
USE CONCRETE ENCASEMENT WHERE A SEWER MAIN CROSSES OVER A WATER MAIN OR WHERE A WATER MAIN CROSSES OVER A SEWER MAIN WITH LESS THAN 18" OF VERTICAL CLEARANCE BETWEEN THE BOTTOM OF THE WATER MAIN AND THE TOP OF THE SEWER MAIN. CENTERING A 20' SECTION OF SANITARY SEWER PIPE AT CROSSING MAY BE USED IN LIEU OF ENCASEMENT.

CONC. ENCASEMENT DETAIL
NOT TO SCALE

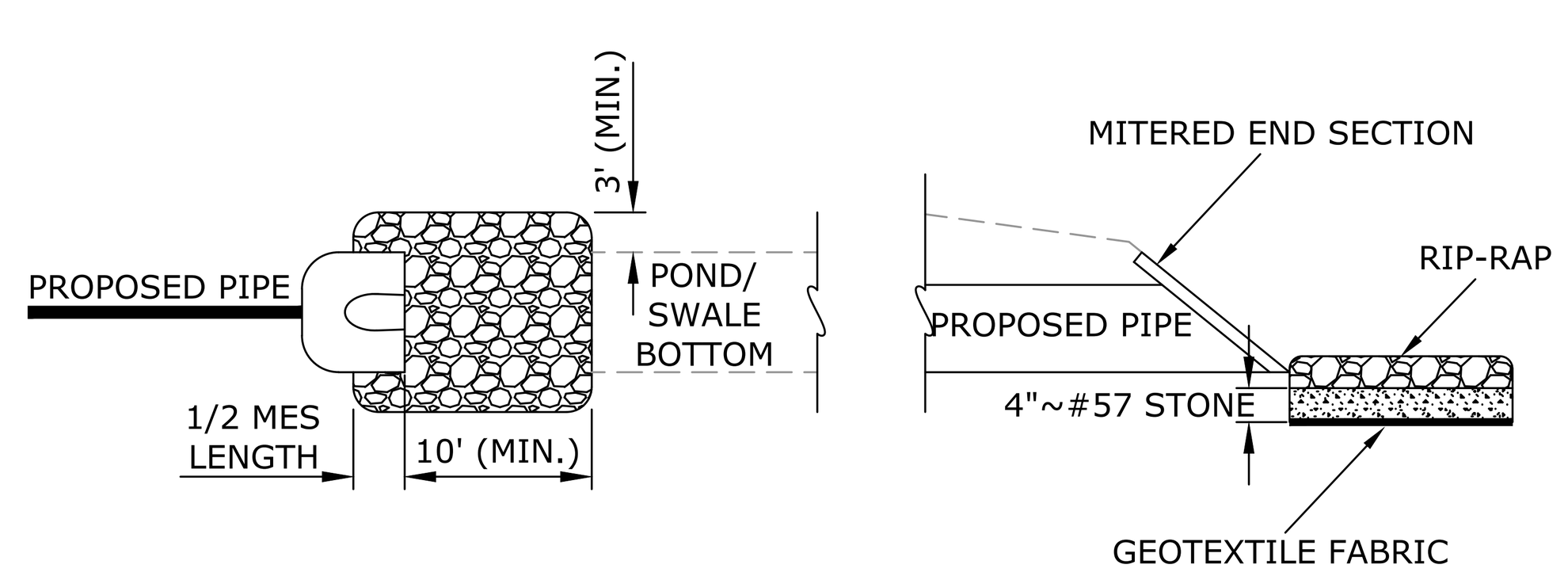

RIP-RAP INSTALLATION DETAIL
NOT TO SCALE

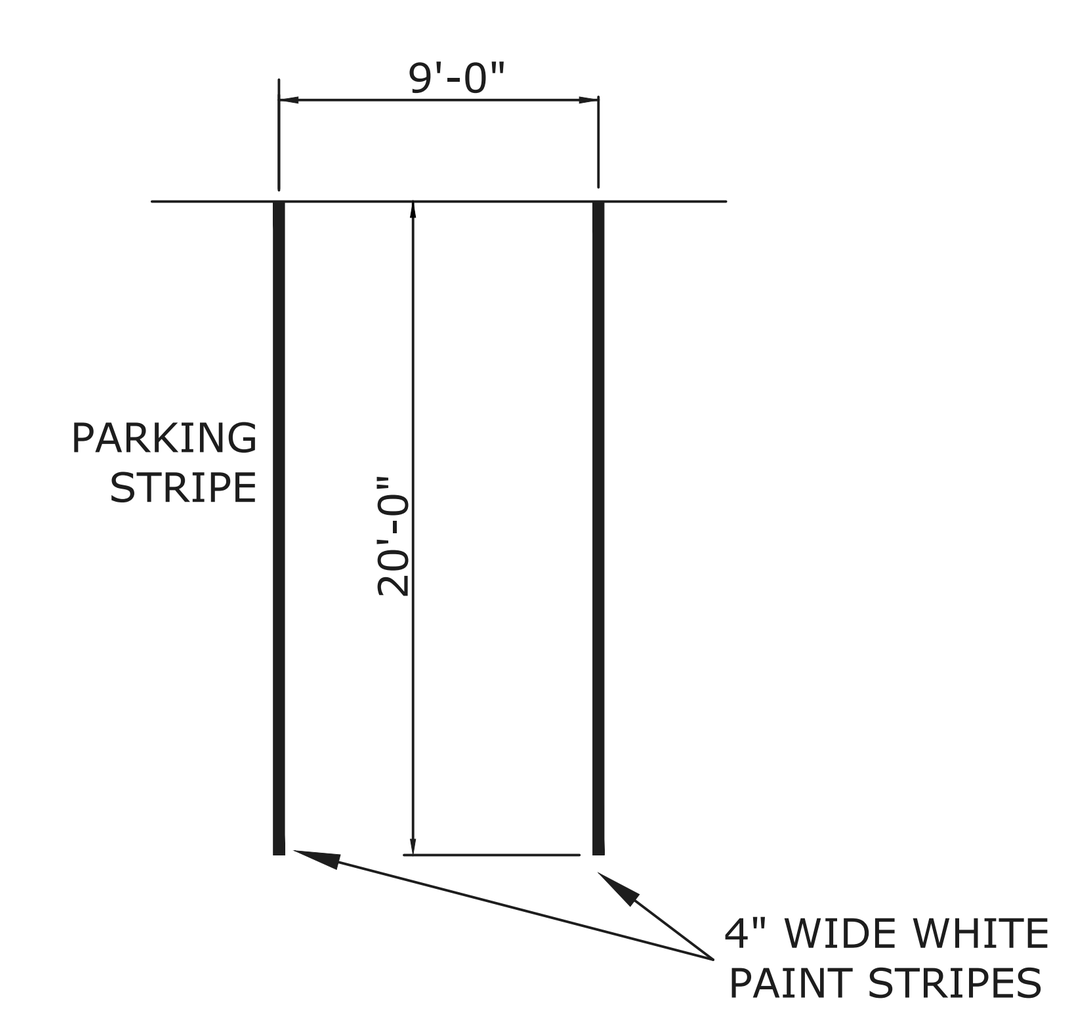

NOTE:
ALL NON-HANDICAPPED STRIPING OR MARKINGS SHALL BE WHITE IN COLOR.

TYPICAL PARKING SPACE STRIPING DETAIL
NOT TO SCALE

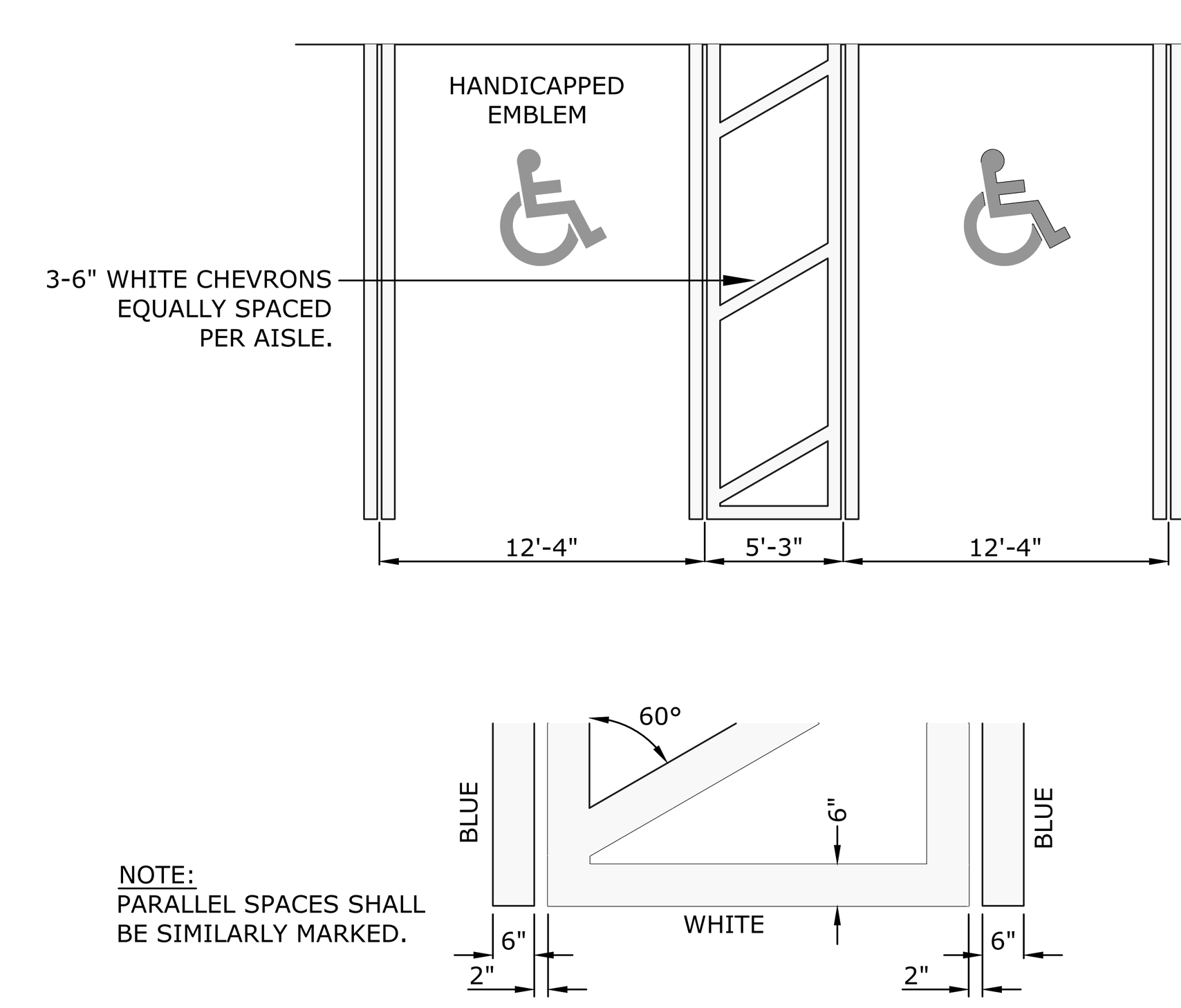

NOTE:
PARALLEL SPACES SHALL BE SIMILARLY MARKED.

HANDICAP STRIPING DETAIL
NOT TO SCALE

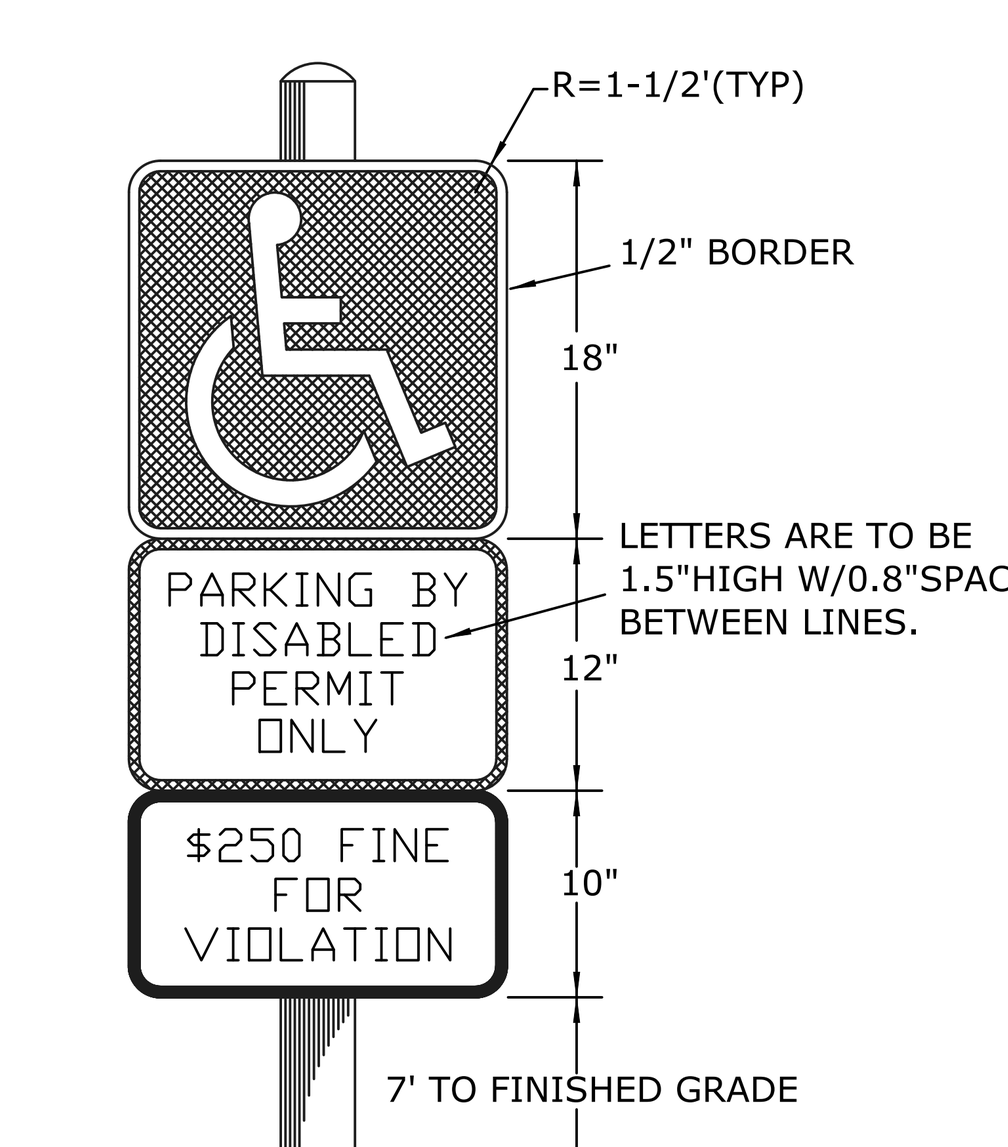

NOTES:
1. TOP PORTION OF SIGN SHALL HAVE A REFLECTIVE BLUE BACKGROUND w/WHITE REFLECTIVE SYMBOL & BORDER.
2. BOTTOM PORTION SHALL HAVE A REFLECTIVE WHITE BACKGROUND w/BLACK OPAQUE LEGEND & BORDER.
3. SIGN CAN BE FABRICATED ON ONE PANEL OR TWO.
4. SIGNS USED AS PER FLORIDA STATUTES 316.1955 AND 316.1956.
5. SIGN SHALL BE MOUNTED TO THE FACE OF THE BUILDING.

HANDICAP SIGN DETAIL
NOT TO SCALE

ARCHITECTURE + ENGINEERING
License No. 26002939 License No. 30900
1230 Oakley Seaver Drive, Suite 200 - Clermont, FL 34711
P: 888-850-FFAE (3323)
www.forefrontae.com
FOREFRONT
Service Beyond Design
Dale E. Long, P.E.
P.E. #55393

CIVIL DETAILS

PAXTON AGING FACILITY
22174 US HWY 331 N, PAXTON, FL 32567
WALTON COUNTY FLORIDA

MUNICIPAL ENGINEERING SERVICES INC
8574 Turkey Bluff Road ◇ Navarre, Florida 32566 ◇ p: (850) 939-5732
CERTIFICATE OF AUTHORIZATION: CA-30886

REVISIONS

ANY DISCREPANCY OR ERROR IN DIMENSIONS OR NOTES SHALL BE BROUGHT TO THE ATTENTION OF THE DESIGN PROFESSIONAL FOR CLARIFICATION PRIOR TO COMMENCEMENT OF CONSTRUCTION.

JOB #: 230001
DATE: AUGUST 2023

C-701

© FOREFRONT ARCHITECTURE & ENGINEERING LLC 2014 THIS DOCUMENT AND/OR THE DESIGN CONCEPTS EXPRESSED HEREIN ARE THE PROPERTY OF FOREFRONT ARCHITECTURE & ENGINEERING LLC AND ALL RIGHTS OF OWNERSHIP, INCLUDING COPYRIGHT OF INTELLECTUAL PROPERTY, ARE RESERVED. ANY REPRODUCTIONS, COPYING, OR USE OF THIS DOCUMENT AND/OR THE DESIGN CONCEPT WITHOUT THE WRITTEN CONSENT OF FOREFRONT ARCHITECTURE & ENGINEERING LLC IS STRICTLY PROHIBITED AND PROTECTED BY UNITED STATES AND INTERNATIONAL LAW. IF PRINTED ON 11X17 SCALE IS HALF THE SIZE NOTED.

NOTE:

1. This Index applies to Two-Lane, Two-Way and Multilane Roadways, including Medians of divided roadways, with work on the shoulder.
2. L = Taper Length
   X = Work Zone Sign Spacing
   B = Buffer Length
   See Index 102-600 for "L", "X", "B", and channelizing device spacing values.
3. Where work activities are between 2' and 15' from the edge of traveled way, the Engineer may omit signs and channelizing devices for work operations 60 minutes or less.
4. When four or more work vehicles enter the through traffic lanes in a one hour period (excluding establishing and terminating the work area), use a flagger or lane closure to accommodate work vehicle ingress and egress.
5. For work less than 2' from the traveled way and work zone speed is greater than 45 MPH, use a lane closure.
6. The "Speeding Fines Doubled When Workers Present" signs (W07-13-D6) and "End Road Work" Signs (G20-2) along with the associated work zone sign spacing distances may be omitted when the work operation is in place for 24 hours or less.
7. Temporary pavement markings may be omitted when the work operation is in place for 3 days or less.
8. Omit "Shoulder Closed" signs (W21-5a) along with associated work zone sign spacing distances for work on the median.
9. When there is no paved shoulder, the "Worker" sign (W21-1) may be used instead of the "Shoulder Closed" sign (W21-5a).

SYMBOLS:

- Work Area
- Channelizing Device (See Index 102-600)
- Work Zone Sign
- Lane Identification and Direction of Traffic

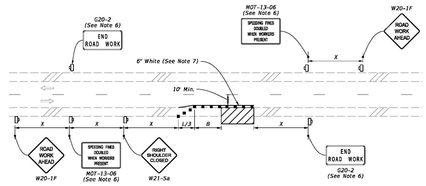

TWO-LANE ROADWAY
SHOULDER WORK LESS THAN 2' FROM THE TRAVELED WAY WITH WORK ZONE SPEED OF 45 MPH OR LESS

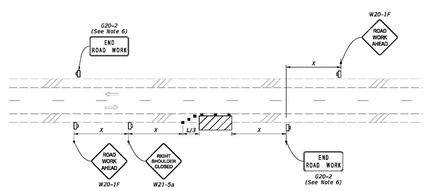

TWO-LANE ROADWAY
SHOULDER WORK BETWEEN 2' AND 15' FROM THE TRAVELED WAY

LAST REVISION 11/01/21	REVISION	DESCRIPTION:	FDOT FY 2023-24 STANDARD PLANS	TWO-LANE AND MULTILANE, WORK ON SHOULDER	INDEX 102-602	SHEET 1 of 2

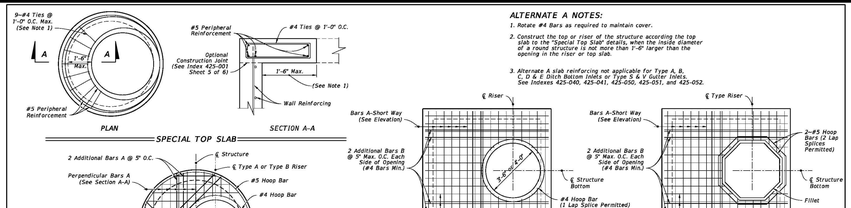

SPECIAL TOP SLAB

ALTERNATE A NOTES:

1. Rotate #4 Bars as required to maintain cover.
2. Construct the top or riser of the structure according the top slab to the "Special Top Slab" details, when the inside diameter of a round structure is not more than 1'-0" larger than the opening in the riser or top slab.
3. Alternate A slab reinforcing not applicable for Type A, B, C, D & E Ditch Bottom Inlets or Type S & V Gutter Inlets. See Indexes 425-040, 425-041, 425-050, 425-051, and 425-052.

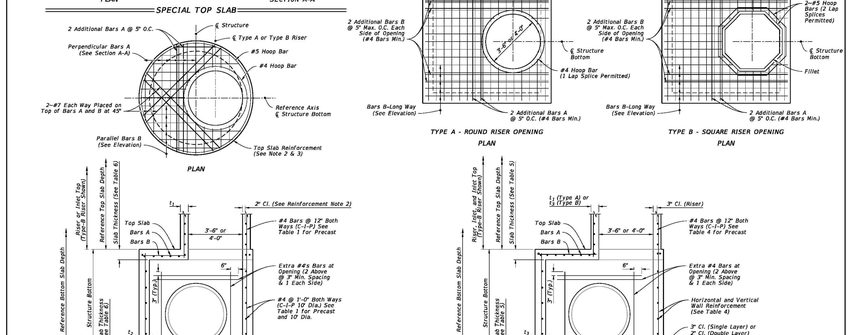

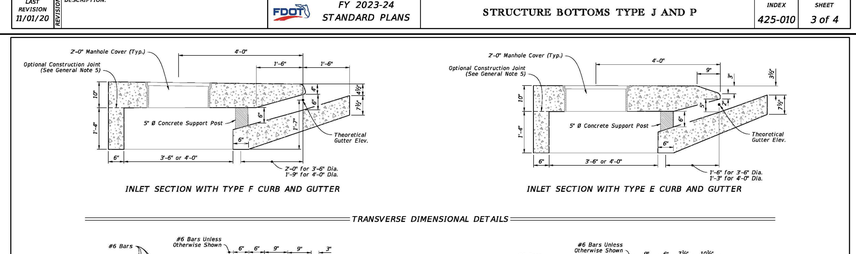

DIMENSIONAL AND REINFORCING DETAILS

LAST REVISION 11/01/20	REVISION	DESCRIPTION:	FDOT FY 2023-24 STANDARD PLANS	STRUCTURE BOTTOMS TYPE J AND P	INDEX 425-010	SHEET 2 of 4

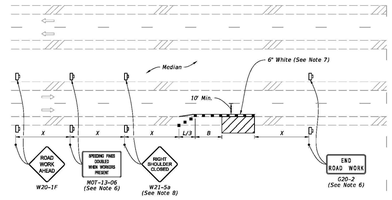

MULTILANE ROADWAY
SHOULDER WORK LESS THAN 2' FROM THE TRAVELED WAY WITH WORK ZONE SPEED OF 45 MPH OR LESS

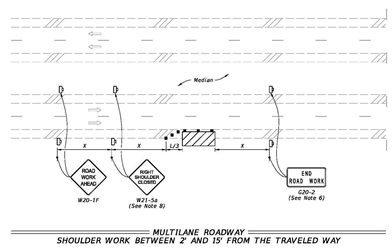

MULTILANE ROADWAY
SHOULDER WORK BETWEEN 2' AND 15' FROM THE TRAVELED WAY

LAST REVISION 11/01/20	REVISION	DESCRIPTION:	FDOT FY 2023-24 STANDARD PLANS	TWO-LANE AND MULTILANE, WORK ON SHOULDER	INDEX 102-602	SHEET 2 of 2

TABLE 1 - ALTERNATE A - STRUCTURES

TYPE	STRUCTURE/RISER DIAMETER (ft)	CAST-IN-PLACE ITEMS CLASS II CONCRETE RISER (in.)	BOTTOM (in.)	t_2 (in.)	A_3 (in²/ft.)	PRECAST ITEMS CLASS II CONCRETE RISER (in.)	BOTTOM (in.)	t_2 (in.)	A_3 (in²/ft.)
P	3'-6"	6	8	0.20	6	8	0.20	6##	0.105
P	4'-0"	6	8	0.20	6	8	0.20	5##	0.120
J	3'-0"	–	8	0.20	–	8	0.20	6##	0.150
J	3'-6"	–	8	0.20	–	8	0.20	6	0.180
J	4'-0"	–	8	0.20	–	8	0.20	7	0.210
J	8'-0"	–	8	0.20	–	8	0.20	8	0.240
J	10'-0"	–	10	0.40##	–	10	0.40##	10	0.300
J	12'-0"	–	10	0.40##	–	12	0.40##	12	0.360

t_2 and t_2- Wall Thickness.
A_3= Vertical and horizontal areas of reinforcement.
##Provide 0.20 eq. in.²/ft. at each face, 12" max. bar spacing.
**Modified minimum wall thickness.
***Min. total circumferential reinforcement for continuous steel hoops:
A2 = 0.40 sq. in. for riser section height equal or less than 2'-0" (2 hoop min.)
A_2 = 0.60 sq. in. for riser section height more than 2'-0" up to 4'-0" (3 hoop min.)
Areas of reinforcing for precast items are based on Grade 60 reinforcing.
No reduction in the area of reinforcement is allowed for welded wire fabric in Table 1.
Area of vertical reinforcing may be reduced in accordance with ASTM C478.

TABLE 2 - ALTERNATE B SQUARE AND RECTANGULAR STRUCTURES

TYPE	WALL LENGTH (Ft)	WALL DEPTH (Ft)	WALL THICKNESS (t_1) C.I.P. (in.)	PRECAST (in.)
P	≤ 3'-6"	40	E Riser & B Bottom	6
J	4'-0"	40	8	6
J	5'-0"	22	–	6
J	6'-0"	15	–	6
J	5'-0" to 9'-0"	40	8	8
J	10'-0"	26	8	8
J	10'-0" to 12'-0"	40	10	9
J	10'-0"	35	–	9
J	10'-0"	40	10	10
J	20'-0"	25	–	9
J	20'-0"	30	10	10

See Table 4 for Reinforcing Schedule.

TABLE 3 - REINFORCING SCHEDULE

SCHEDULE	GRADE 60 AREA (in²/ft)	GR 60 BARS (in.)	GRADE 60 BARS OR 65 KSI & 70 KSI WELDED WIRE REINFORCING MAXIMUM SPACING 65 KSI (in.)	WWR EQUIV. AREA 70 KSI (in.)
A12	0.20	12	8	8
A6	0.20	6	5	4½
B10	0.24	10	8	7½
B5.5	0.24	5½	5	4
C6.5	0.37	6½	6	5
C3.5	0.37	3½	3	2½
D7	0.53	7	6	5
D4.5	0.53	4½	4	3½
E5	0.73	5	4	4
E3	0.73	3	3	3
F5	1.06	5	4	4
F3.5	1.06	3½	3	3
G5	1.45	5	4	4
G3.5	1.45	3½	3	3
H4	1.75	4	3	3

TABLE 4 - WALL DESIGNS - RECTANGULAR STRUCTURES

VERTICAL REINFORCING WALL DEPTH	VERTICAL REINFORCING SCHEDULE	HORIZONTAL REINFORCING WALL DEPTH	HORIZONTAL REINFORCING SCHEDULE	WALL THICKNESS
SIZE: 3'-6" & RISER				
≥1.17' < 40'	A12	≥1.17' < 10'	B10	6"/8"
		10' < 18'	B5.5	6"/8"
		18' < 29'	C6.5	6"/8"
		29' < 40'	C3.5	6"/8"
SIZE: 4'-0"				
≥1.17' < 40'	A12	≥1.17' < 6'	B10	6"/8"
		6' < 10'	B5.5	6"/8"
		10' < 20'	C6.5	6"/8"
		20' < 29'	C3.5	6"/8"
		29' < 40'	D4.5	6"/8"
SIZE: 5'-0"				
≥1.17' < 40'	A12	≥1.17' < 5'	B5.5	6"/8"
		5' < 9'	C6.5	6"/8"
		9' < 13'	C3.5	6"/8"
		13' < 22'	D4.5	6"/8"
		22' < 40'	E3	8"
SIZE: 6'-0"				
≥1.17' < 26'	A12	≥1.17' < 9'	C3.5	6"/8"
		9' < 15'	D4.5	6"/8"
		15' < 26'	E3	8"
	Inside/Outside		Inside/Outside	
26' < 40'	A12 / A12	26' < 40'	D7 / D7	8"
SIZE: 7'-0"				
	Inside/Outside		Inside/Outside	
≥1.17' < 25'	A12 / A12	≥1.17' < 7'	B10 / B10	8"
26' < 40'	B10 / B10	7' < 10'	B5.5 / B5.5	8"
		10' < 20'	C6.5 / C6.5	8"
		20' < 30'	D7 / D7	8"
		30' < 40'	E5 / E5	8"
SIZE: 8'-0"				
	Inside/Outside		Inside/Outside	
≥1.17' < 20'	A12 / A12	≥1.17' < 6'	B5.5 / B5.5	8"
20' < 40'	C6.5 / C6.5	6' < 13'	C6.5 / C6.5	8"
		13' < 22'	D7 / D7	8"
		22' < 31'	E5 / E5	8"
		31' < 40'	F5 / F5	8"
SIZE: 9'-0"				
	Inside/Outside		Inside/Outside	
≥1.17' < 12'	A12 / A12	≥1.17' < 8'	C6.5 / C6.5	8"
12' < 28'	C6.5 / C6.5	8' < 15'	D7 / D7	8"
28' < 40'	D7 / D7	15' < 23'	E5 / E5	8"
		23' < 40'	F5 / F5	8"
SIZE: 10'-0"				
	Inside/Outside		Inside/Outside	
≥1.17' < 10'	B10 / B10	≥1.17' < 10'	D7 / D7	8"
10' < 21'	C6.5 / C6.5	10' < 17'	E5 / E5	8"
21' < 28'	D7 / D7	17' < 28'	F5 / F5	8"
28' < 40'	C6.5 / C6.5	28' < 40'	F5 / F5	10"

VERTICAL REINFORCING WALL DEPTH	VERTICAL REINFORCING SCHEDULE	HORIZONTAL REINFORCING WALL DEPTH	HORIZONTAL REINFORCING SCHEDULE	WALL THICKNESS
SIZE: 10'-0" (Precast Only)				
	Inside/Outside		Inside/Outside	
26' < 40'	D7 / D7	26' < 40'	F5 / F5	9"
SIZE: 12'-0"				
	Inside/Outside		Inside/Outside	
≥1.17' < 14'	B10 / B10	≥1.17' < 10'	C6.5 / C6.5	10"
14' < 25'	C6.5 / C6.5	10' < 17'	D7 / D7	10"
25' < 40'	D7 / D7	17' < 24'	E5 / E5	10"
		24' < 40'	F5 / F5	10"
SIZE: 12'-0" (Precast Only)				
	Inside/Outside		Inside/Outside	
≥1.17' < 12'	B10 / B10	≥1.17' < 10'	D7 / D7	9"
12' < 24'	C6.5 / C6.5	10' < 17'	D4.5 / D4.5	9"
24' < 40'	D7 / D7	17' < 23'	E5 / E5	9"
		23' < 32'	F5 / F5	9"
		32' < 40'	G5 / G5	9"
SIZE: 16'-0"				
	Inside/Outside		Inside/Outside	
≥1.17' < 11'	C6.5 / C6.5	≥1.17' < 13'	D7 / D7	10"
11' < 20'	D7 / D7	13' < 20'	E5 / E5	10"
20' < 28'	E5 / E5	20' < 28'	F5 / F5	10"
28' < 40'	F5 / F5	28' < 40'	G5 / G5	10"
SIZE: 16'-0" (Precast Only)				
	Inside/Outside		Inside/Outside	
≥1.17' < 10'	C6.5 / C6.5	≥1.17' < 9'	D7 / D7	9"
10' < 18'	D7 / D7	9' < 13'	D4.5 / D4.5	9"
18' < 25'	E5 / E5	13' < 19'	E5 / E5	9"
25' < 39'	F5 / F5	19' < 27'	F5 / F5	9"
		27' < 35'	G5 / G5	9"
SIZE: 20'-0"				
	Inside/Outside		Inside/Outside	
≥1.17' < 10'	C6.5 / C6.5	≥1.17' < 8'	D7 / D7	10"
10' < 17'	D7 / D7	8' < 12'	E5 / E5	10"
17' - 30'	E5 / E5	12' < 20'	F5 / F5	10"
		20' - 30'	G5 / G5	10"
SIZE: 20'-0" (Precast Only)				
	Inside/Outside		Inside/Outside	
≥1.17' < 8'	C6.5 / C6.5	≥1.17' < 8'	D4.5 / D4.5	9"
8' < 13'	D7 / D7	8' < 12'	E5 / E5	9"
13' - 25'	E5 / E5	12' < 19'	F5 / F5	9"
		19' - 25'	G5 / G5	9"

TABLE 4 NOTES:

1. Wall depth is measured to the top of the bottom slab for boxes and to the top of the intermediate slab for risers.
2. Wall height is the distance between top of lower slab to bottom of upper slab. Maximum wall height is 12' for wall lengths exceeding 5', or 10' for wall lengths exceeding 12'.
3. Wall lengths exceeding 6'-0" require two layers of reinforcing (See Table 4) with 2" of cover from the horizontal bars to the inside and outside faces for each layer.
4. Wall lengths exceeding the dimensions or depths shown in Table 4, or 12'-0" diameter require a special design.
5. Wall thickness and reinforcing for rectangular structures is based on the longer wall length.

TABLES 1, 2, 3, AND 4

LAST REVISION 11/01/20	REVISION	DESCRIPTION:	FDOT FY 2023-24 STANDARD PLANS	STRUCTURE BOTTOMS TYPE J AND P	INDEX 425-010	SHEET 3 of 4

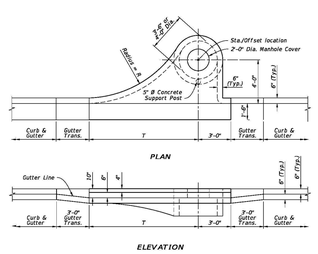

TABLE 1 INLET DIMENSIONS		
Inlet Type	R	T
1	10'-0"	10'-0"
2	10'-0"	10'-0"
3	6'-0"	6'-0"
4	6'-0"	6'-0"

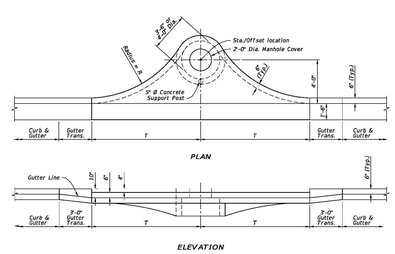

TOP DIMENSIONAL DETAILS

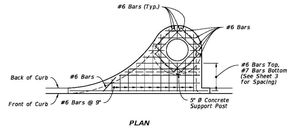

NOTE:
For transverse section reinforcement, see Sheet 3.

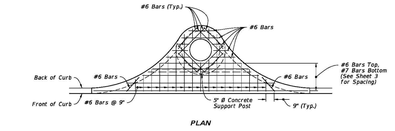

TOP REINFORCING DETAILS

TOP DIMENSIONAL AND TOP REINFORCING DETAILS

LAST REVISION 11/01/20	REVISION	DESCRIPTION:	FDOT FY 2023-24 STANDARD PLANS	CURB INLET TOP TYPES 1, 2, 3, AND 4	INDEX 425-020	SHEET 2 of 3

TRANSVERSE DIMENSIONAL DETAILS

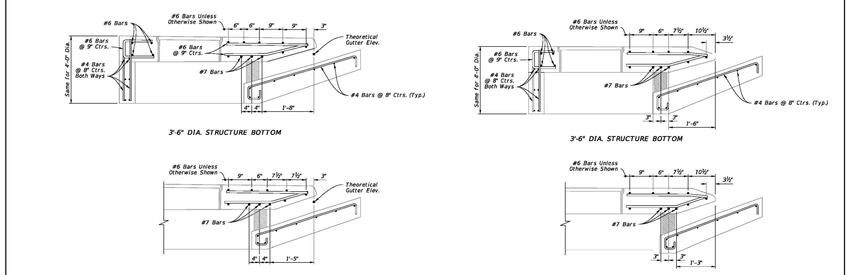

TRANSVERSE REINFORCING DETAILS

TRANSVERSE DIMENSIONAL AND REINFORCING DETAILS

LAST REVISION 11/01/20	REVISION	DESCRIPTION:	FDOT FY 2023-24 STANDARD PLANS	CURB INLET TOP TYPES 1, 2, 3, AND 4	INDEX 425-020	SHEET 3 of 3

ARCHITECTURE + ENGINEERING
License No. 30900
License No. 26002939
1230 Oakley Seaver Drive, Suite 200 - Clermont, FL 34711
P: 888-850-FFAE (3323)
www.forefrontae.com
FOREFRONT
Service Beyond Design
Dale E. Long, P.E.
P.E. #55393

CIVIL DETAILS

PAXTON AGING FACILITY
22174 US HWY 331 N, PAXTON, FL 32567
WALTON COUNTY FLORIDA

MUNICIPAL ENGINEERING SERVICES INC
8874 Trotter Bluff Road - Navarre, Florida 32566 - P: (850) 939-9733
CERTIFICATE OF AUTHORIZATION: CA-#30888

REVISIONS

ANY DISCREPANCY OR ERROR IN DIMENSIONS OR NOTES SHALL BE BROUGHT TO THE ATTENTION OF THE ENGINEER PRIOR TO THE CLARIFICATION PRIOR TO THE COMMENCEMENT OF CONSTRUCTION.

JOB #: 23001
DATE: AUGUST 2023

C-702

R:\PROJ\2023\23001 Paxton Senior Center\DWG\Sheets\00 Details, Plot Date: Thursday, September 14, 2023,3:11:47 PM, Plotted By: mdorman

© FOREFRONT ARCHITECTURE & ENGINEERING LLC 2014 THIS DOCUMENT AND/OR THE DESIGN CONCEPTS EXPRESSED HEREIN ARE THE PROPERTY OF FOREFRONT ARCHITECTURE & ENGINEERING LLC AND ALL RIGHTS OF OWNERSHIP, INCLUDING COPYRIGHT OF INTELLECTUAL PROPERTY, ARE RESERVED. ANY REPRODUCTIONS, COPYING, OR USE OF THIS DOCUMENT AND/OR THE DESIGN CONCEPT WITHOUT THE WRITTEN CONSENT OF FOREFRONT ARCHITECTURE & ENGINEERING LLC IS STRICTLY PROHIBITED AND PROTECTED BY UNITED STATES AND INTERNATIONAL LAW. IF PRINTED ON 11X17 SCALE IS HALF THE SIZE NOTED.

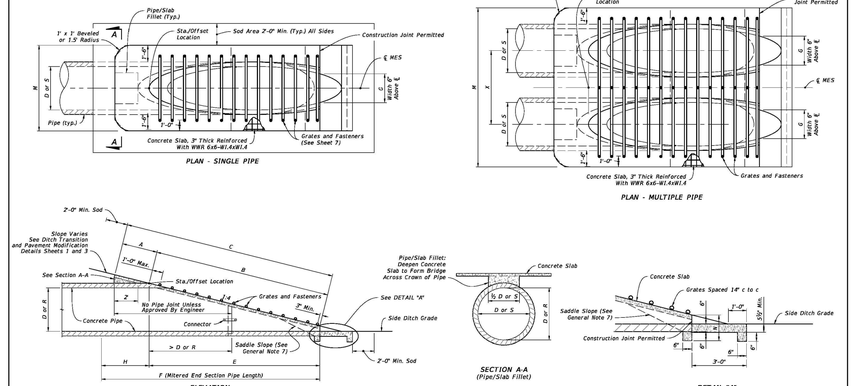

SINGLE AND MULTIPLE CONCRETE PIPE

LAST REVISION 11/01/18	DESCRIPTION:	FDOT FY 2023-24 STANDARD PLANS	SIDE DRAIN MITERED END SECTION	INDEX 430-022	SHEET 2 of 7

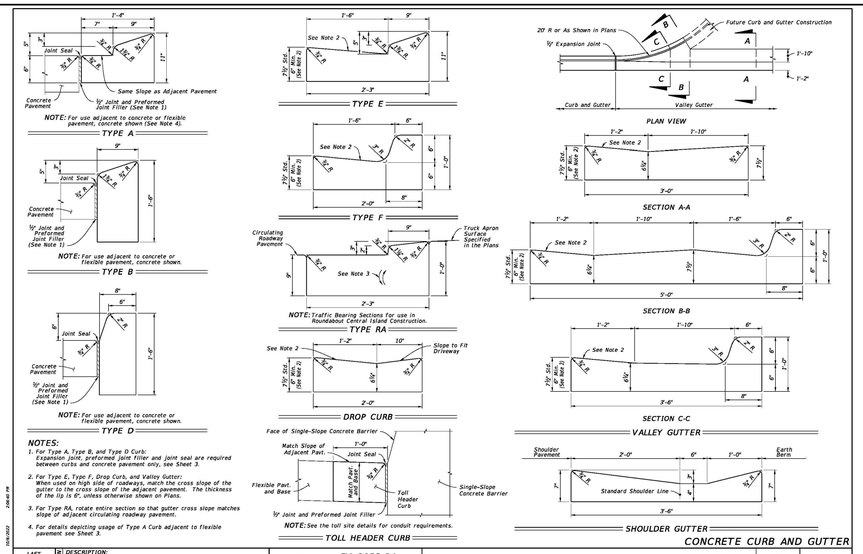

CONCRETE CURB AND GUTTER

LAST REVISION 11/01/21	DESCRIPTION:	FDOT FY 2023-24 STANDARD PLANS	CURB AND GUTTER	INDEX 520-001	SHEET 2 of 3

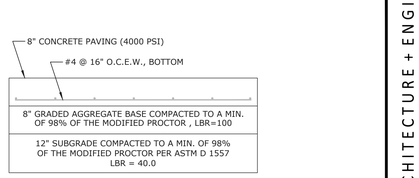

CONCRETE PAVING SECTION

NOT TO SCALE

NOTES:

1. ½" FELT EXPANSION JOINTS SHALL BE PROVIDED AROUND THE PERIMETER OF THE CONCRETE PAVING AS SHOWN.
2. CONTROL JOINTS SHALL BE ½" WIDE BY 2" DEEP AND INSTALL IN 10'x 10' GRID PER THE GEOTECHNICAL REPORT AND AS SHOWN.
3. CONTRACTOR SHALL REFER TO GEOTECHNICAL ENGINEERING REPORT FOR ADDITIONAL INFORMATION REGARDING RIGID PAVEMENT SECTION DESIGN.
4. 6" SLAB FOR DUMPSTER SHALL MEET THE SAME BASE AND SUBGRADE REQUIREMENTS NOTED ABOVE BUT SHALL BE REINFORCED WITH 6"X6" W2.9XW2.9 WWF.

SINGLE AND MULTIPLE CONCRETE PIPE DIMENSIONS AND QUANTITIES

Pipe Type	Dia. D	Rise R	Span S	X	A	B	C	E	F	G	H	M Single Pipe	M Double Pipe	M Triple Pipe	M Quad. Pipe	N STANDARD WEIGHT PIPE	N EXTRA STRONG PIPE	9" CONC. SLAB (CY) Single Pipe	9" CONC. SLAB (CY) Double Pipe	9" CONC. SLAB (CY) Triple Pipe	9" CONC. SLAB (CY) Quad. Pipe	SODDING (SY) Single Pipe	SODDING (SY) Double Pipe	SODDING (SY) Triple Pipe	SODDING (SY) Quad. Pipe
Round Concrete	15"	—	—	2'-7"	2'-7"	4.09'	6.38'	4.08'	8'	1'-12"	4.0'	4.63'	7.21'	9.79'	12.37'	1.19'		0.76	1.16	1.54	1.94	8	10	11	12
	18"	—	—	2'-10"	2'-10"	5.12'	7.48'	5.05'	9'	1'-41"	4.0'	4.92'	7.75'	10.58'	13.42'	1.21'		0.85	1.28	1.71	2.17'	9	10	12	13
	24"	—	—	3'-5"	3'-5"	7.18'△	9.71'	7.03' △	11'	1'-73"	4.0'	5.50'	8.93'	12.35'	15.75'	1.25'		1.02	1.58	2.15'	2.75'	10	12	13	15
	30"	—	—	4'-3"	3'-10"	9.23'	11.59'	9.03'	13'	2'-00"	4.0'	6.08'	10.33'	14.58'	18.83'	1.29'	25"	1.23	1.98	2.74	3.50	12	14	15	17
	36"	—	—	5'-1"	3'-8"	11.31'△	14.18'	11.09' △	15'	2'-24"	4.0'	6.67'	11.75'	16.83'	21.92'	1.33'	25"	1.40	2.38	3.33	4.24	13	15	17	20
	42"	—	—	6'-0"	3'-10"	13.35'	16.82'	13.02'	17'	2'-48"	4.0'	7.25'	13.03'	19.35'	25.25'	1.38'	25"	1.60	2.83	4.04	5.26	14	17	19	22
	48"	—	—	6'-8"	4'-0"	15.43'	18.63'	15.02'	19'	2'-83"	4.0'	7.83'	14.08'	21.33'	28.58'	1.42'	25"	1.81	3.28	4.92'	6.14'	15	18	21	24
	54"	—	—	7'-6"	4'-2"	17.59'	20.51'	17.02'	21'	3'-17"	4.0'	8.42'	15.08'	23.17'	31.08'	1.46'	25"	2.03	3.76	5.63'	7.38'	16	20	23	27
	60"	—	—	8'-4"	4'-4"	19.90'	23.31'	19.03'	23'	3'-60"	4.0'	9.00'	16.08'	25.00'	34.50'	1.48'	3"	2.24	4.26	6.43'	8.28'	18	21	25	29
Elliptical Concrete	—	12"	18"	2'-10"	2'-10"	5.28'	7.00'	5.42'	9'	1'-50"	3.0'	4.92'	7.73'	10.58'	13.42'	1.21'		0.68	1.04	1.41	1.77'	8	9	11	12
	—	19"	30"	4'-3"	3'-4"	7.44'	9.73'	6.19'	13'	2'-90"	3.3'	5.38'	8.71'	12.04'	15.38'	1.29'		0.76	1.19	1.63	2.05'	9	10	12	13
	—	19"	30"	4'-3"	3'-6"	7.62'	9.91'	6.38'	13'	2'-73"	2.8'	6.04'	10.04'	14.04'	18.04'	1.37'	25"	0.95	1.52	2.09'	2.65	10	12	13	15
	—	24"	38"	5'-0"	3'-7"	9.07'	11.38'	7.82'	15'	3'-10"	2.8'	6.79'	11.75'	16.79'	21.79'	1.31'	25"	1.18'	1.95'	2.74'	3.53'	11	13	15	18
	—	29"	45"	5'-11"	3'-11"	11.09'	13.49'	9.70'	17'	3'-19"	3.3'	7.50'	13.45'	19.33'	25.22'	1.38'	25"	1.41'	2.42'	3.44'	4.45'	12	15	18	20
	—	34"	53"	7'-0"	4'-3"	13.22'	15.82'	11.58'	20'	4'-0"	3.3'	8.25'	15.25'	22.29'	29.25'	1.42'	3"	1.63	2.92	4.22'	5.52'	13	17	20	23
	—	38"	60"	7'-10"	4'-3"	13.99'	15.38'	11.70'	19'	3'-93"	3.3'	8.92'	16.75'	24.58'	32.42'	1.46'	3"	1.83	3.36	4.89	6.41	14	18	21	25
	—	43"	68"	8'-11"	3'-6"	13.71'	17.27'	13.38'	17'	4'-28"	3.6'	9.67'	18.58'	27.50'	36.42'	1.50'	3"	2.09	3.85	5.60	7.65	16	20	23	27
	—	48"	76"	9'-11"	3'-7"	15.43'	19.16'	15.02'	19'	4'-59"	4.0'	10.42'	20.33'	30.25'	40.17'	1.54'	3"	HSS 9"PX	2.37	4.54	6.73	8.92	17	21	26	30
	—	53"	83"	10'-9"	3'-9"	17.15'	21.06'	16.70'	20'	4'-77"	3.3'	11.08'	21.75'	32.42'	43.08'	1.58'	3"	HSS 9"PX	2.61	5.09	7.56	10.03	18	23	27	32
	—	58"	91"	11'-8"	4'-0"	18.87'	22.69'	18.38'	22'	5.01'	3.6'	11.83'	23.50'	35.17'	46.83'	1.63'	3½"	HSS 9"PX	2.91	5.77	8.64	11.50	19	24	29	35

△6.42' ◇6.29' Dimensions permitted to allow use of 9' standard pipe lengths.
◇10.40' ◇10.10' Dimensions permitted to allow use of 12' standard pipe lengths.

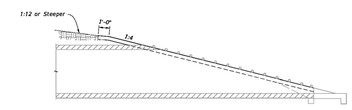

PERMISSIBLE PAVEMENT MODIFICATION

CONCRETE PIPE DIMENSIONS AND QUANTITIES AND PERMISSIBLE PAVEMENT MODIFICATION

LAST REVISION 11/01/19	DESCRIPTION:	FDOT FY 2023-24 STANDARD PLANS	SIDE DRAIN MITERED END SECTION	INDEX 430-022	SHEET 3 of 7

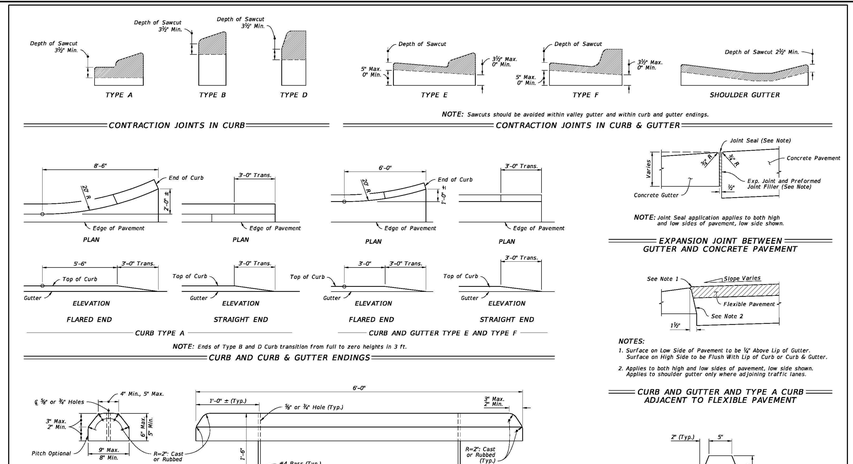

CURB AND GUTTER JOINTS AND ENDINGS, CONCRETE BUMPER GUARD, AND ASPHALTIC CONCRETE CURB

LAST REVISION 11/01/21	DESCRIPTION:	FDOT FY 2023-24 STANDARD PLANS	CURB AND GUTTER	INDEX 520-001	SHEET 3 of 3

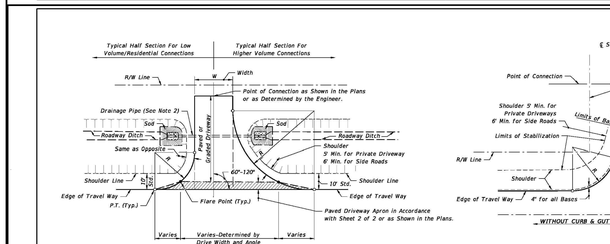

CONCRETE PIPE DIMENSIONS AND QUANTITIES AND PERMISSIBLE PAVEMENT MODIFICATION

| LAST REVISION 11/01/19 | DESCRIPTION: | FDOT FY 2023-24 STANDARD PLANS | SIDE DRAIN MITERED END SECTION | INDEX 430-022 | SHEET 3 of 7

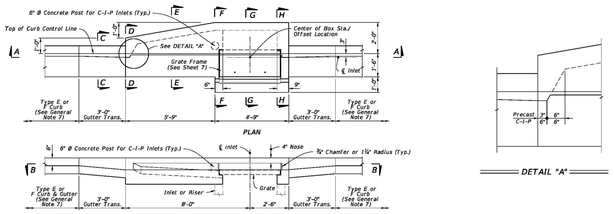

TYPE 5 DIMENSIONAL DETAILS

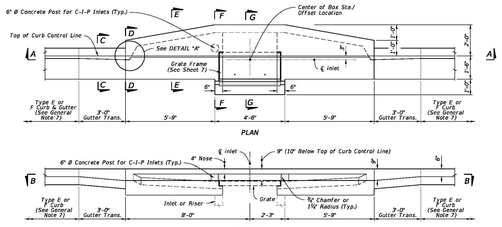

TYPE 6 DIMENSIONAL DETAILS

TYPE 5 AND 6 DIMENSIONAL DETAILS

LAST REVISION 11/01/20	REVISION	DESCRIPTION:	FDOT FY 2023-24 STANDARD PLANS	CURB INLET TOP TYPES 5 AND 6	INDEX 425-021	SHEET 2 of 7

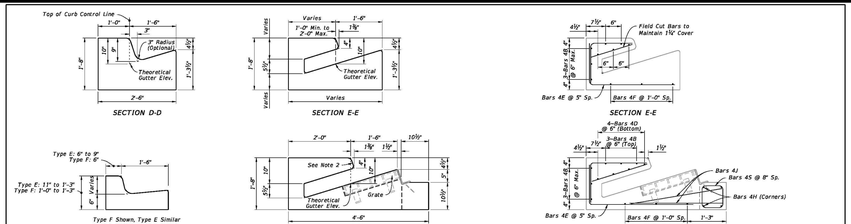

NOTES:
1. For location of Sections D-D thru H-H see Sheet 2.
2. Match slope of adjacent curb with 2" top radius and ¾" bottom chamfer of 1½" radius.
3. See Plans for bottom and riser type.

DIMENSIONAL DETAILS

REINFORCING DETAILS

PRECAST DIMENSIONAL AND REINFORCING DETAILS

LAST REVISION 11/01/20	REVISION	DESCRIPTION:	FDOT FY 2023-24 STANDARD PLANS	CURB INLET TOP TYPES 5 AND 6	INDEX 425-021	SHEET 4 of 7

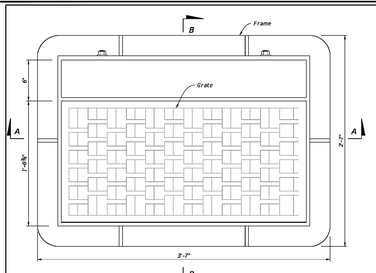

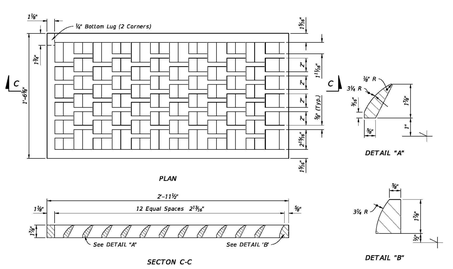

GRATE DETAILS

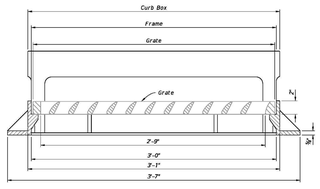

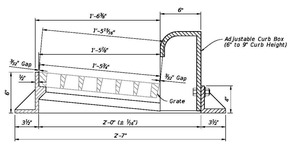

FRAME AND GRATE DETAILS

FRAME AND GRATE DETAILS

LAST REVISION 10/01/20	REVISION	DESCRIPTION:	FDOT FY 2023-24 STANDARD PLANS	CURB INLET TYPE 9	INDEX 425-024	SHEET 2 of 3

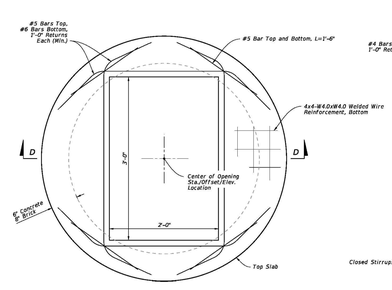

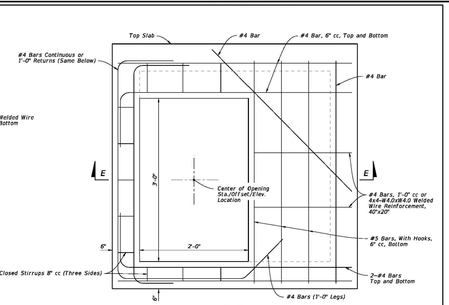

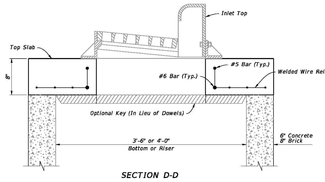

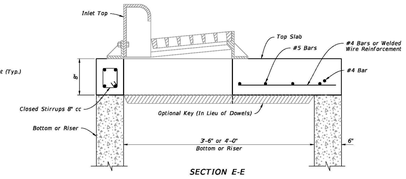

TOP SLAB DETAILS

LAST REVISION 10/01/20	REVISION	DESCRIPTION:	FDOT FY 2023-24 STANDARD PLANS	CURB INLET TYPE 9	INDEX 425-024	SHEET 3 of 3

ARCHITECTURE + ENGINEERING
License No. 30900
License No. 26002939
1230 Oakley Seaver Drive, Suite 200 - Clermont, FL 34711
P: 888-850-FFAE (3323)
www.forefrontaec.com
FOREFRONT
Service Beyond Design
Dale E. Long, P.E.
P.E. #55393

CIVIL DETAILS

PAXTON AGING FACILITY
22174 US HWY 331 N, PAXTON, FL 32567
WALTON COUNTY FLORIDA

MUNICIPAL ENGINEERING SERVICES INC
8874 Trustee Bluff Road - Navarre, Florida 32566 - P: (850) 939-4733
CERTIFICATE OF AUTHORIZATION C.A. #30666

REVISIONS

ANY DISCREPANCY OR ERROR IN DESIGN OR IN NOTES SHALL BE BROUGHT TO THE ATTENTION OF THE DESIGN ENGINEER FOR CLARIFICATION PRIOR TO COMMENCEMENT OF CONSTRUCTION.

JOB #: 230001
DATE: AUGUST 2023

C-704

R:\PROJ\2023\230001 Paxton Senior Center\DWG\Sheets\00 Details, Plot Date: Thursday, September 14, 2023,3:12:18 PM, Plotted By: mdorman

© FOREFRONT ARCHITECTURE & ENGINEERING LLC 2014 THIS DOCUMENT AND/OR THE DESIGN CONCEPTS EXPRESSED HEREIN ARE THE PROPERTY OF FOREFRONT ARCHITECTURE & ENGINEERING LLC AND ALL RIGHTS OF OWNERSHIP, INCLUDING COPYRIGHT OF INTELLECTUAL PROPERTY, ARE RESERVED. ANY REPRODUCTIONS, COPYING, OR USE OF THIS DOCUMENT AND/OR THE DESIGN CONCEPT WITHOUT THE WRITTEN CONSENT OF FOREFRONT ARCHITECTURE & ENGINEERING LLC IS STRICTLY PROHIBITED AND PROTECTED BY UNITED STATES AND INTERNATIONAL LAW. IF PRINTED ON 11X17 SCALE IS HALF THE SIZE NOTED.

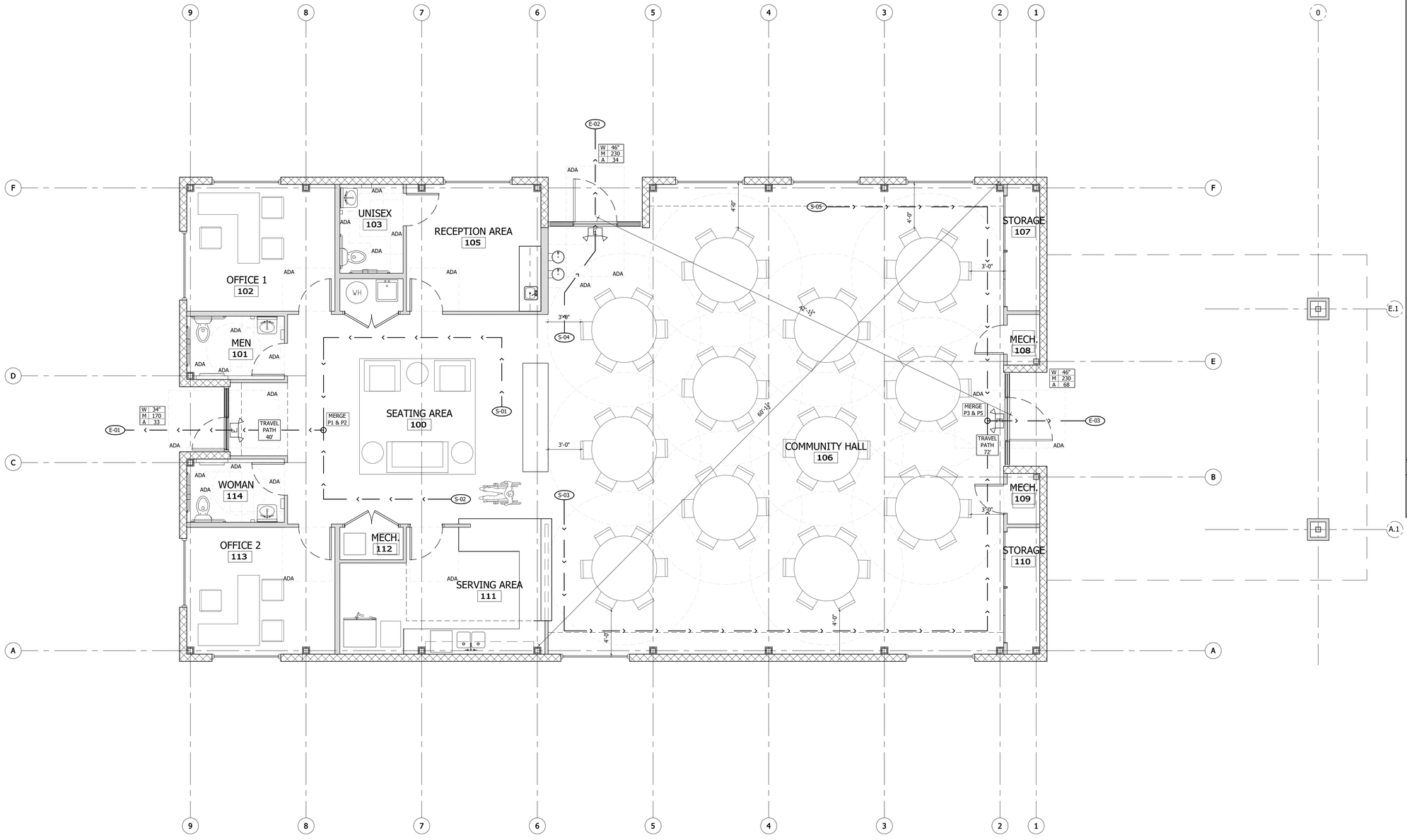

LIFE SAFETY LEGEND

- S - INDICATES START OF LONGEST TRAVEL PATH INSIDE OF BUILDING
- E - INDICATES END OF TRAVEL PATH OUTSIDE OF DOOR
- TRAVEL PATH 80' — INDICATES TRAVEL PATH NUMBER; INDICATES TRAVEL PATH DISTANCE
- W XX / M XX / A XX — EGRESS DOORWAY WIDTH IN INCHES PROVIDED; EGRESS CAPACITY CALCULATED MAX. OCCUPANT LOAD (0.2); ACTUAL APPORTIONED OCCUPANT LOAD CALCULATED TO PASS THROUGH THIS OPENING (OCCUPANCY LOAD FOR EACH SPACE PLUS HALLWAYS OCCUPANCY LOAD)
- TRAVEL PATH, ARROWS INDICATE DIRECTION
- CLEAR WIDTH OF OPENING
- 34 — EGRESS USER FACTOR
- CORRIDOR WIDTH XX" — INDICATES CLEAR WIDTH OF CORRIDOR IN INCHES
- MERGE P1 0 P2 — MERGE POINTS OF ONE OR MORE EXIT TRAVEL PATHS
- FEC — FIRE EXTINGUISHER CABINET, WALL-MOUNTED; 5 LB, 2A-10B:C, MULTI-PURPOSE EXTINGUISHER. TOP OF EXTINGUISHER SHALL NOT BE MORE THAN 5' AFF AND THE BOTTOM SHALL NOT BE LESS THAN 4" AFF
- SD — SMOKE DETECTOR, CEILING-MOUNTED
- BA — INTRUSION / BURGLAR ALARM PANEL
- FEC K — FIRE EXTINGUISHER CABINET, WALL-MOUNTED; 5 LB, TYPE 'K' EXTINGUISHER. TOP OF EXTINGUISHER SHALL NOT BE MORE THAN 5' AFF AND THE BOTTOM SHALL NOT BE LESS THAN 4" AFF
- EMERGENCY LIGHT
- EXIT — EXIT LIGHT IN PUBLIC AREAS
- EXIT — EXIT LIGHT
- COMBINATION EXIT LIGHT AND EMERGENCY LIGHT
- DENOTES DIRECTION OF SIGN FACE
- EXIT LIGHT-SHADED AREA DENOTES DIRECTION OF SIGN FACE
- E — ADDITIONAL 'E' DESIGNATES EXISTING EXIT LIGHT
- VISUAL SIGNALING UNIT - WALL MOUNTED; FLASHING "FIRE" LIGHT ONLY (NO AUDIO DEVICE)
- F — FIRE ALARM ANNUNCIATOR PANEL, FLUSH MOUNTED
- F — MANUAL PULL STATION
- (F) — COMBINATION AUDIBLE/VISUAL SIGNALING UNIT- CHIME/FLASHING "FIRE" LIGHT
- FACP — FIRE ALARM CONTROL PANEL
- FAAP — SECURITY CAMERA
- CEILING OUTLET BOX AND SMOKE DETECTOR
- 2 X 4 FLUORESCENT WITH BATTERY INVERTER BACK-UP
- SA — SMOKE ALARM & ANNUNCIATOR FOR DUCT-MOUNTED SMOKE DETECTORS

NOTES

1. FIRE EXTINGUISHERS TO BE LOCATED A MAXIMUM OF 75 FEET FROM ANY LOCATION.
2. EXISTING LIFE SAFETY DEVICES ARE TO REMAIN. SCOPE OF WORK DOES NOT AFFECT/ DIMINISH EGRESS PATHS OR CAPACITY.

LIFE SAFETY PLAN W/ FURNITURE - FIRST FLOOR PLAN

SCALE: 1/4"=1'-0"

ARCHITECTURE + ENGINEERING
License No. 102538
License No. 26002939
1230 Oakley Seaver Drive, Suite 200 - Clermont, FL 34711
P: 888-850-FFAE (3323)
www.forefrontae.com
FOREFRONT
Service Beyond Design

REVISION
0 | 00/00/00

SENIOR CENTER

22174 US HIGHWAY 331 N PAXTON FL 32567

LIFE SAFETY PLAN WITH FURNITURE - FIRST FLOOR PLAN

ANY DISCREPANCY OR ERROR IN DIMENSIONS OR NOTES SHALL BE BROUGHT TO THE ATTENTION OF THE DESIGN PROFESSIONAL FOR CLARIFICATION PRIOR TO COMMENCEMENT OF CONSTRUCTION.

JOB #: 21-17367
DATE: 05/24/24

A001

J:\Walton County\Jobs\Aging Facility\21-17367-05- Code Updates\Dwgs\Sheets\Architectural\A001 LIFE SAFETY PLAN WITH FURNITURE - FIRST FLOOR PLAN ; Plot Date: Thursday, May 30, 2024,3:17:35 PM; Plotted By: patricam

© FOREFRONT ARCHITECTURE & ENGINEERING LLC 2014 THIS DOCUMENT AND/OR THE DESIGN CONCEPTS EXPRESSED HEREIN ARE THE PROPERTY OF FOREFRONT ARCHITECTURE & ENGINEERING LLC AND ALL RIGHTS OF OWNERSHIP, INCLUDING COPYRIGHT OF INTELLECTUAL PROPERTY, ARE RESERVED. ANY REPRODUCTIONS, COPYING, OR USE OF THIS DOCUMENT AND/OR THE DESIGN CONCEPT WITHOUT THE WRITTEN CONSENT OF FOREFRONT ARCHITECTURE & ENGINEERING LLC IS STRICTLY PROHIBITED AND PROTECTED BY UNITED STATES AND INTERNATIONAL LAW. IF PRINTED ON 11X17 SCALE IS HALF THE SIZE NOTED.

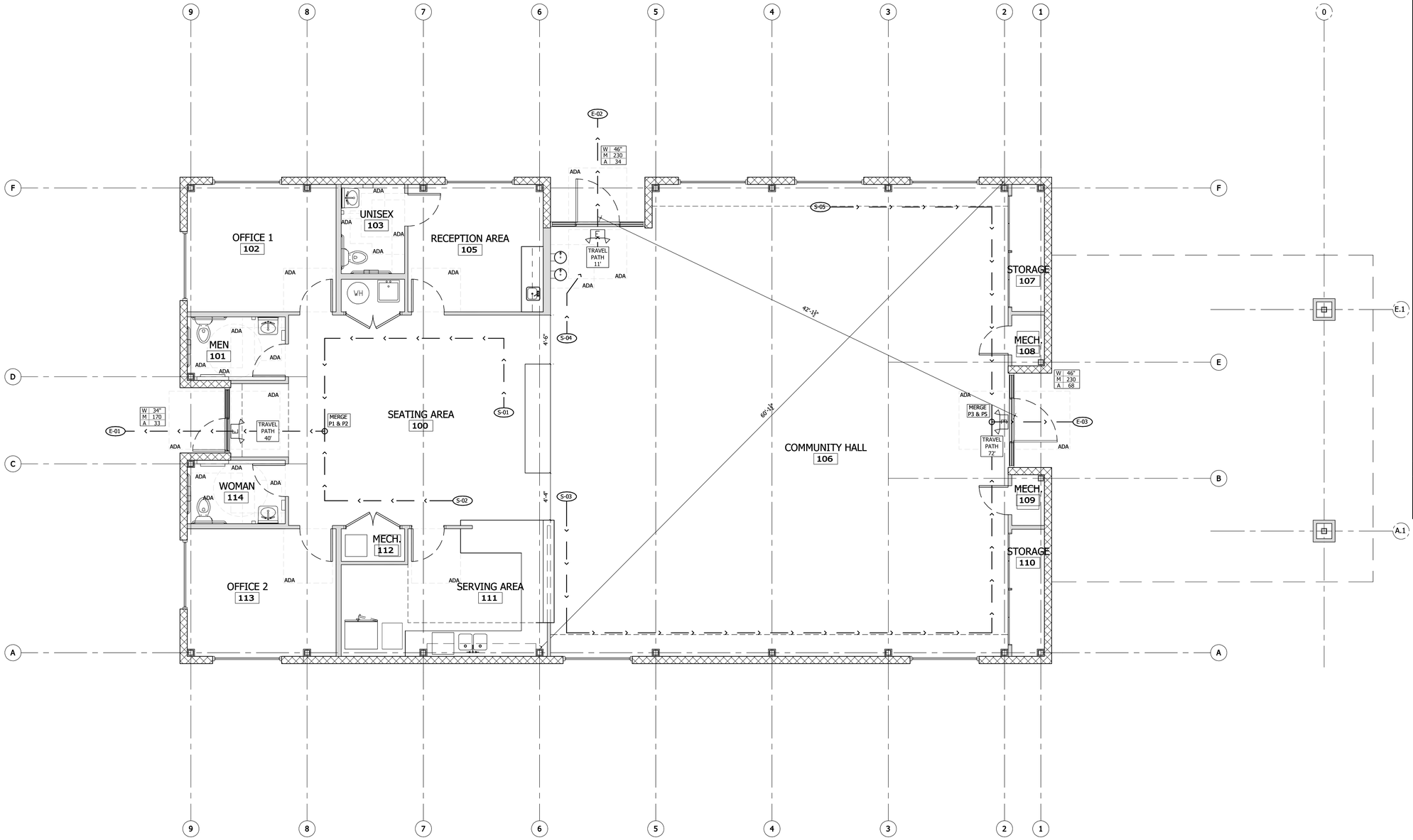

LIFE SAFETY PLAN - FIRST FLOOR PLAN

SCALE: 1/4"=1'-0"

LIFE SAFETY LEGEND

- S - INDICATES START OF LONGEST TRAVEL PATH INSIDE OF BUILDING
- E - INDICATES END OF TRAVEL PATH OUTSIDE OF DOOR
- TRAVEL PATH 80' — INDICATES TRAVEL PATH NUMBER; INDICATES TRAVEL PATH DISTANCE
- W XX, M XX, A XX — EGRESS DOORWAY WIDTH IN INCHES PROVIDED; EGRESS CAPACITY CALCULATED MAX. OCCUPANT LOAD (0.2); ACTUAL APPORTIONED OCCUPANT LOAD CALCULATED TO PASS THROUGH THIS OPENING (OCCUPANCY LOAD FOR EACH SPACE PLUS HALLWAYS OCCUPANCY LOAD)
- TRAVEL PATH, ARROWS INDICATE DIRECTION
- CLEAR WIDTH OF OPENING
- 34 — EGRESS USER FACTOR
- CORRIDOR WIDTH XX" — INDICATES CLEAR WIDTH OF CORRIDOR IN INCHES
- MERGE P1 0 P2 — MERGE POINTS OF ONE OR MORE EXIT TRAVEL PATHS
- FEC — FIRE EXTINGUISHER CABINET, WALL-MOUNTED; 5 LB, 2A-10B:C, MULTI-PURPOSE EXTINGUISHER. TOP OF EXTINGUISHER SHALL NOT BE MORE THAN 5' AFF AND THE BOTTOM SHALL NOT BE LESS THAN 4" AFF
- SD — SMOKE DETECTOR, CEILING-MOUNTED
- BA — INTRUSION / BURGLAR ALARM PANEL
- FEC K — FIRE EXTINGUISHER CABINET, WALL-MOUNTED; 5 LB, TYPE 'K' EXTINGUISHER. TOP OF EXTINGUISHER SHALL NOT BE MORE THAN 5' AFF AND THE BOTTOM SHALL NOT BE LESS THAN 4" AFF
- EMERGENCY LIGHT
- EXIT — EXIT LIGHT IN PUBLIC AREAS
- EXIT — EXIT LIGHT
- COMBINATION EXIT LIGHT AND EMERGENCY LIGHT
- DENOTES DIRECTION OF SIGN FACE
- EXIT LIGHT-SHADED AREA DENOTES DIRECTION OF SIGN FACE
- E — ADDITIONAL 'E' DESIGNATES EXISTING EXIT LIGHT
- VISUAL SIGNALING UNIT - WALL MOUNTED; FLASHING "FIRE" LIGHT ONLY (NO AUDIO DEVICE)
- F — FIRE ALARM ANNUNCIATOR PANEL, FLUSH MOUNTED
- F — MANUAL PULL STATION
- (F) — COMBINATION AUDIBLE/VISUAL SIGNALING UNIT- CHIME/FLASHING "FIRE" LIGHT
- FACP — FIRE ALARM CONTROL PANEL
- FAAP — SECURITY CAMERA
- CEILING OUTLET BOX AND SMOKE DETECTOR
- 2 X 4 FLUORESCENT WITH BATTERY INVERTER BACK-UP
- SA — SMOKE ALARM & ANNUNCIATOR FOR DUCT-MOUNTED SMOKE DETECTORS

NOTES

1. FIRE EXTINGUISHERS TO BE LOCATED A MAXIMUM OF 75 FEET FROM ANY LOCATION.
2. EXISTING LIFE SAFETY DEVICES ARE TO REMAIN. SCOPE OF WORK DOES NOT AFFECT/ DIMINISH EGRESS PATHS OR CAPACITY.

REVISION
0 00/00/00

ARCHITECTURE + ENGINEERING
License No. 102538
License No. 26002939
1230 Oakley Seaver Drive, Suite 200 - Clermont, FL 34711
P: 888-860-FFAE (3323)
www.forefrontae.com
FOREFRONT
Service Beyond Design

SENIOR CENTER

22174 US HIGHWAY 331 N PAXTON FL 32567

LIFE SAFETY PLAN - FIRST FLOOR PLAN

ANY DISCREPANCY OR ERROR IN DIMENSIONS OR NOTES SHALL BE BROUGHT TO THE ATTENTION OF THE DESIGN PROFESSIONAL FOR CLARIFICATION PRIOR TO COMMENCEMENT OF CONSTRUCTION.

JOB #: 21-17367
DATE: 05/24/24
A002

J:\Walton County\Jobs\Aging Facility\21-17367-05- Code Update\Dwgs\Sheets\Architectural\A002 LIFE SAFETY PLAN - FIRST FLOOR PLAN , Plot Date: Thursday, May 30, 2024,3:17:51 PM, Plotted By: patricam

© FOREFRONT ARCHITECTURE & ENGINEERING LLC 2014 THIS DOCUMENT AND/OR THE DESIGN CONCEPTS EXPRESSED HEREIN ARE THE PROPERTY OF FOREFRONT ARCHITECTURE & ENGINEERING LLC AND ALL RIGHTS OF OWNERSHIP, INCLUDING COPYRIGHT OF INTELLECTUAL PROPERTY, ARE RESERVED. ANY REPRODUCTIONS, COPYING OR USE OF THIS DOCUMENT AND/OR THE DESIGN CONCEPT WITHOUT THE WRITTEN CONSENT OF FOREFRONT ARCHITECTURE & ENGINEERING LLC IS STRICTLY PROHIBITED AND PROTECTED BY UNITED STATES AND INTERNATIONAL LAW. IF PRINTED ON 11x17 SCALE IS HALF THE SIZE NOTED.



OCCUPANCY CALCULATION PLAN - FIRST FLOOR PLAN

SCALE: 1/4"=1'-0"

OCCUPANT LOAD					
NAME	FUNCTION OF SPACE OCCUPANCY CATEGORY		SF	OCCUPANT LOAD FACTOR	INDIVIDUAL OCCUPANT LOAD
ASSEMBLY - COMMUNITY HALL		DINING AREA/TABLE AND CHAIRS	1,847	15 NET	123
ACCESSORY - FBC 303.1.2		OFFICES, SITTING AREA	1,028	150 GROSS	7
		SERVING AREA	227	150 GROSS	2
		MECHANICAL CLOSETS & STORAGE AREAS	187	300 GROSS	1
		RESTROOMS	196	150 GROSS	2
TOTAL OCCUPANT LOAD					135

PLUMBING FIXTURE COUNT FBC TABLE 2902.1 135 TOTAL OCCUPANTS /2 = 68 M/F									
URINAL/WATER CLOSETS				LAVATORIES				DRINKING FOUNTAINS	SERVICE SINKS
MALE	1.7	REQUIRED	3 PROVIDED	0.91	PROVIDED	3	PROVIDED	1	1
FEMALE	1.7	REQUIRED	3 PROVIDED	0.91	PROVIDED	3	PROVIDED		

N

REVISION
0 | 00/00/00

ARCHITECTURE + ENGINEERING
License No. 102538
License No. 26002939
1230 Oakley Seaver Drive, Suite 200 - Clermont, FL 34711
P: 888-850-FFAE (3323)
www.forefrontae.com
FOREFRONT
Service Beyond Design

SENIOR CENTER

22174 US HIGHWAY 331 N PAXTON FL 32567

OCCUPANCY CALC.- FIRST FLOOR PLAN

ANY DISCREPANCY OR ERROR IN DIMENSIONS OR NOTES SHALL BE BROUGHT TO THE ATTENTION OF THE DESIGN PROFESSIONAL FOR CLARIFICATION PRIOR TO COMMENCEMENT OF CONSTRUCTION.

JOB #: 21-17367
DATE: 05/24/24

A003

J:\Walton County\Jobs\Aging Facility\21-17367-SS- Code Update\Dwgs\Sheets\Architectural\A003 OCCUPANCY CALC. - FIRST FLOOR PLAN , Plot Date: Thursday, May 30, 2024,3:18:04 PM, Plotted By: patriciam

© FOREFRONT ARCHITECTURE & ENGINEERING LLC 2014 THIS DOCUMENT AND/OR THE DESIGN CONCEPTS EXPRESSED HEREIN ARE THE PROPERTY OF FOREFRONT ARCHITECTURE & ENGINEERING LLC AND ALL RIGHTS OF OWNERSHIP, INCLUDING COPYRIGHT OF INTELLECTUAL PROPERTY, ARE RESERVED. ANY REPRODUCTIONS, COPYING, OR USE OF THIS DOCUMENT AND/OR THE DESIGN CONCEPT WITHOUT THE WRITTEN CONSENT OF FOREFRONT ARCHITECTURE & ENGINEERING LLC IS STRICTLY PROHIBITED AND PROTECTED BY UNITED STATES AND INTERNATIONAL LAW. IF PRINTED ON 11X17 SCALE IS HALF THE SIZE NOTED.

REFERENCE KEYNOTES

SENIOR CENTER

092 - 24"X24" DALTILE- SUPERIOR SLIP RESISTANT FLOOR TILE. MODEL: SCRIPER - MENTOR SQUARE - COLOR: AR62 - MATTE - OR EQUAL
22D - WATER HEATHER - REFER TO PLUMBING
22N - BI-LEVEL ADA DRINKING FOUNTAIN - ELKAY_LMAQFTLBSC OR EQUAL
22T - UTILITY/MOP SINK
23A - DUCTWORK, SEE MECHANICAL DRAWINGS

WALL LEGEND

- 3 1/2" MTL STUD WALL
- 5 1/2" MTL STUD WALL
- 8" CMU WALL
- L&K ARCHITECTURAL - 1" POLYRESIN FAUX WOOD WRAP OR EQUAL WITH APPROVAL

DOOR AND WINDOW LEGEND

- XX — DOOR TAG. SEE SHEET A701 FOR DOOR SCHEDULE
- XXX — WINDOW TAG. SEE SHEET A701 FOR WINDOW SCHEDULE
- SX — STOREFRONT TAG. SEE SHEET A701 FOR STOREFRONT SCHEDULE

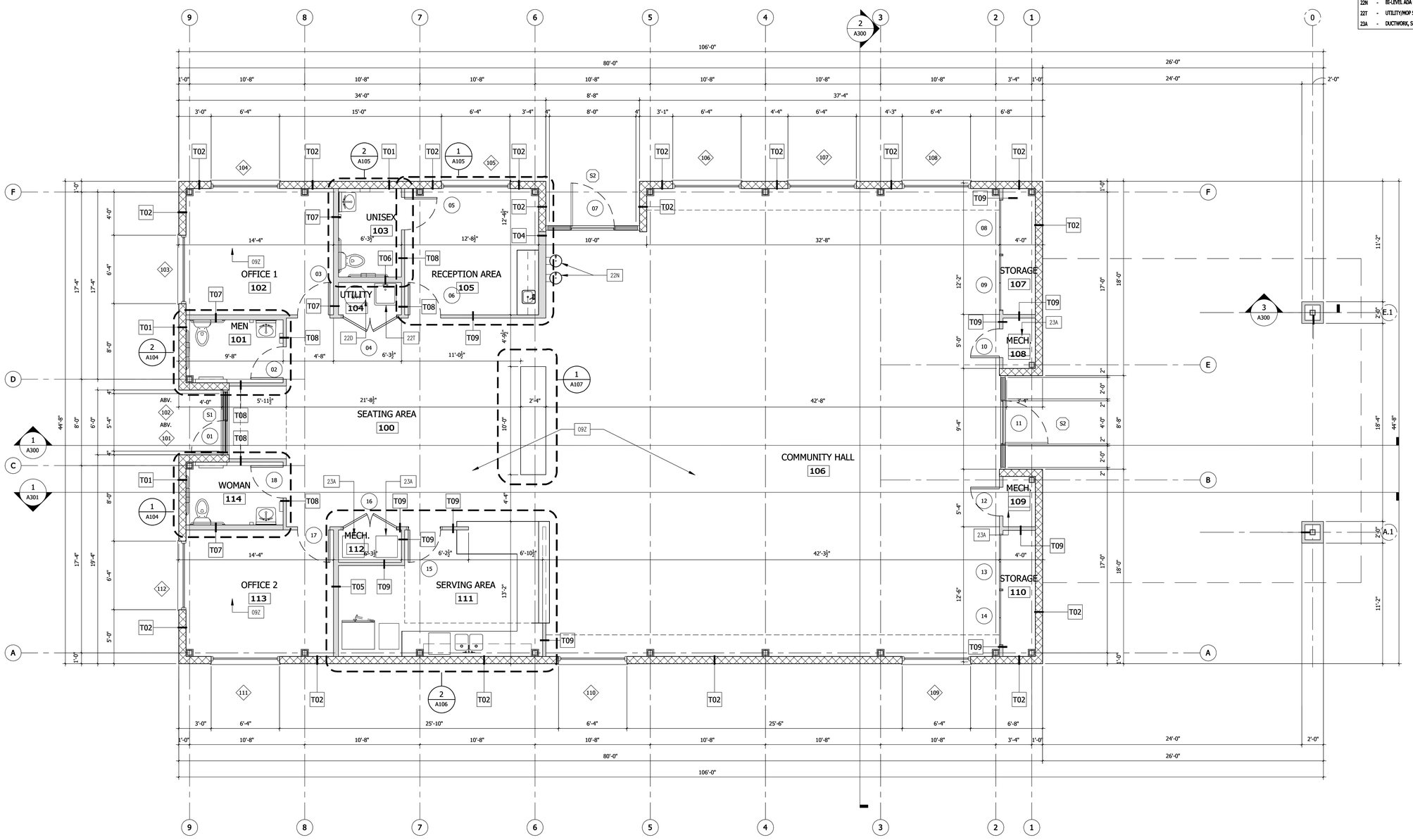

FIRST FLOOR PLAN

SCALE: 1/4"=1'-0"

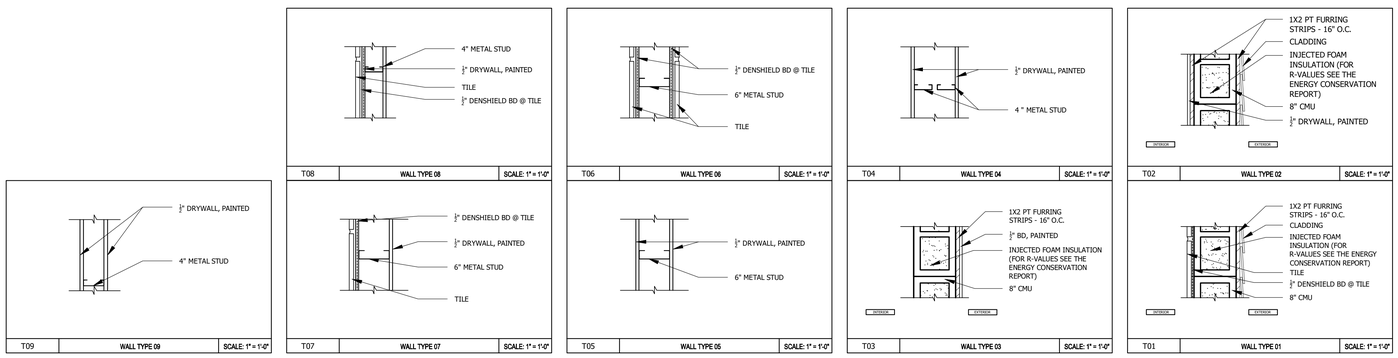

ARCHITECTURE + ENGINEERING
License No. 102538
License No. 26002939
1230 Oakley Seaver Drive, Suite 200 - Clermont, FL 34711
P: 888-850-FFAE (3323)
www.forefrontae.com
FOREFRONT
Service Beyond Design

REVISION	
0	00/00/00

SENIOR CENTER

22174 US HIGHWAY 331 N PAXTON FL 32567

FIRST FLOOR PLAN

ANY DISCREPANCY OR ERROR IN DIMENSIONS OR NOTES SHALL BE BROUGHT TO THE ATTENTION OF THE DESIGN PROFESSIONAL FOR CLARIFICATION PRIOR TO COMMENCEMENT OF CONSTRUCTION.

JOB #: 21-17367
DATE: 05/24/24

A101

© FOREFRONT ARCHITECTURE & ENGINEERING LLC 2014 THIS DOCUMENT AND/OR THE DESIGN CONCEPTS EXPRESSED HEREIN ARE THE PROPERTY OF FOREFRONT ARCHITECTURE & ENGINEERING LLC AND ALL RIGHTS OF OWNERSHIP, INCLUDING COPYRIGHT OF INTELLECTUAL PROPERTY, ARE RESERVED. ANY REPRODUCTIONS, COPYING, OR USE OF THIS DOCUMENT AND/OR THE DESIGN CONCEPT WITHOUT THE WRITTEN CONSENT OF FOREFRONT ARCHITECTURE & ENGINEERING LLC IS STRICTLY PROHIBITED AND PROTECTED BY UNITED STATES AND INTERNATIONAL LAW. IF PRINTED ON 11X17 SCALE IS HALF THE SIZE NOTED.

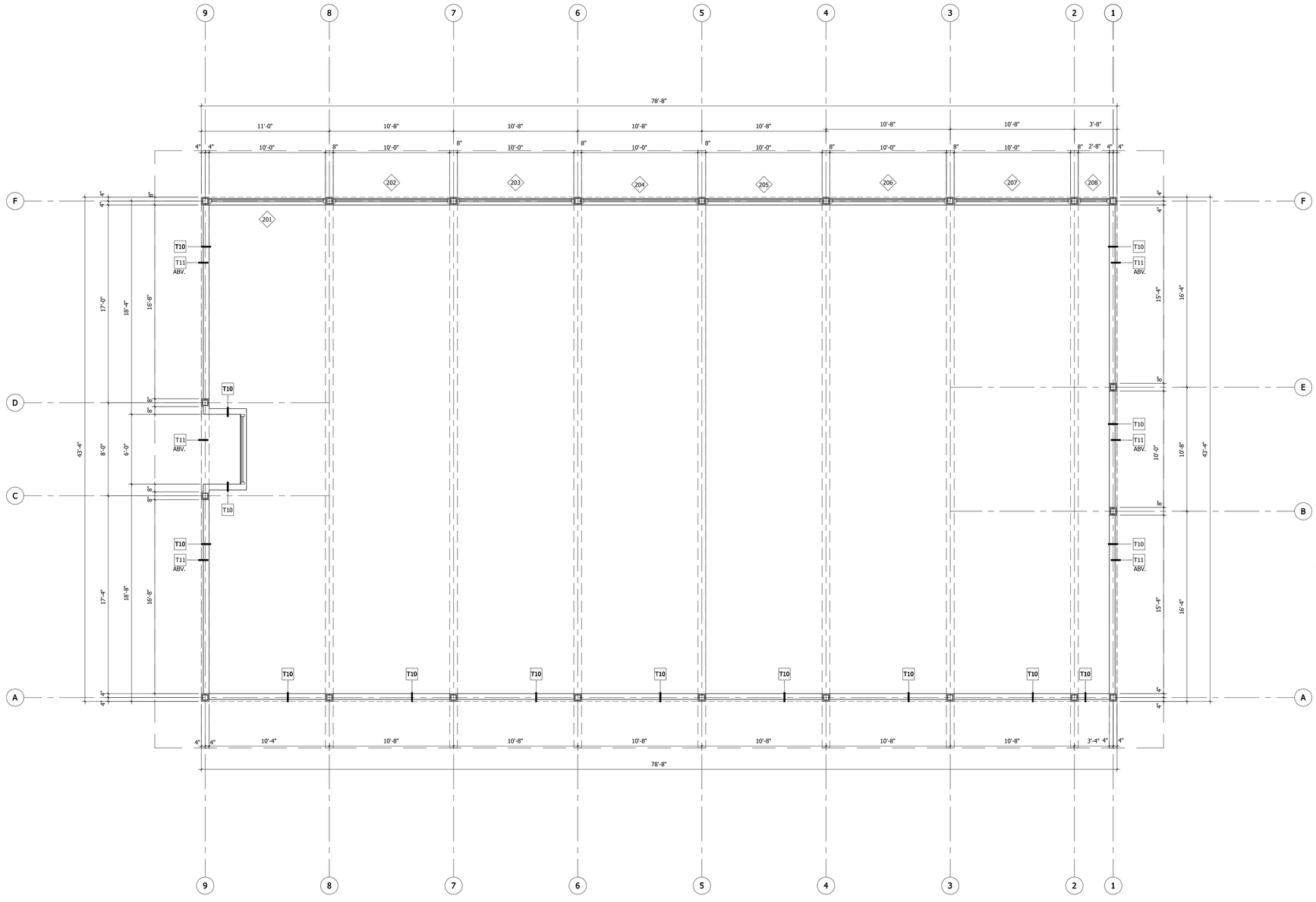

RAISED FLOOR PLAN

SCALE: 1/4"=1'-0"

T11	WALL TYPE 11	SCALE: 1" = 1'-0"



T10	WALL TYPE 10	SCALE: 1" = 1'-0"

WALL LEGEND

- 3 1/2" MTL STUD WALL
- 5 1/2" MTL STUD WALL
- 8" CMU WALL
- L&K ARCHITECTURAL - 1" POLYRESIN FAUX WOOD WRAP OR EQUAL WITH APPROVAL

DOOR AND WINDOW LEGEND

- XX — DOOR TAG. SEE SHEET A701 FOR DOOR SCHEDULE
- XXX — WINDOW TAG. SEE SHEET A701 FOR WINDOW SCHEDULE
- SX — STOREFRONT TAG. SEE SHEET A701 FOR STOREFRONT SCHEDULE

REVISION	
0	00/00/00

ARCHITECTURE + ENGINEERING
License No. 102538
License No. 26002939
1230 Oakley Seaver Drive, Suite 200 - Clermont, FL 34711
P: 888-950-FFAE (3323)
www.forefrontae.com
FOREFRONT
Service Beyond Design

SENIOR CENTER

22174 US HIGHWAY 331 N PAXTON FL 32567

RAISED FLOOR PLAN

ANY DISCREPANCY OR ERROR IN DIMENSIONS OR NOTES SHALL BE BROUGHT TO THE ATTENTION OF THE DESIGN PROFESSIONAL FOR CLARIFICATION PRIOR TO COMMENCEMENT OF CONSTRUCTION.

JOB #: 21-17367
DATE: 05/24/24

A102

J:\Walton County\Jobs\Aging Facility\21-17367-05- Code Update\Dwgs\Sheets\Architectural\A102 RAISED FLOOR PLAN , Plot Date: Thursday, May 30, 2024,3:19:00 PM, Plotted By: patriciam

© FOREFRONT ARCHITECTURE & ENGINEERING LLC 2014 THIS DOCUMENT AND/OR THE DESIGN CONCEPTS EXPRESSED HEREIN ARE THE PROPERTY OF FOREFRONT ARCHITECTURE & ENGINEERING LLC AND ALL RIGHTS OF OWNERSHIP, INCLUDING COPYRIGHT OF INTELLECTUAL PROPERTY, ARE RESERVED. ANY REPRODUCTIONS, COPYING, OR USE OF THIS DOCUMENT AND/OR THE DESIGN CONCEPT WITHOUT THE WRITTEN CONSENT OF FOREFRONT ARCHITECTURE & ENGINEERING LLC IS STRICTLY PROHIBITED AND PROTECTED BY UNITED STATES AND INTERNATIONAL LAW. IF PRINTED ON 11X17 SCALE IS HALF THE SIZE NOTED.

REFERENCE KEYNOTES

SENIOR CENTER

07M - 16" WIDTH STANDING SEAM METAL ROOF

07N - TPO SELF-ADHERED ROOF MEMBRANE

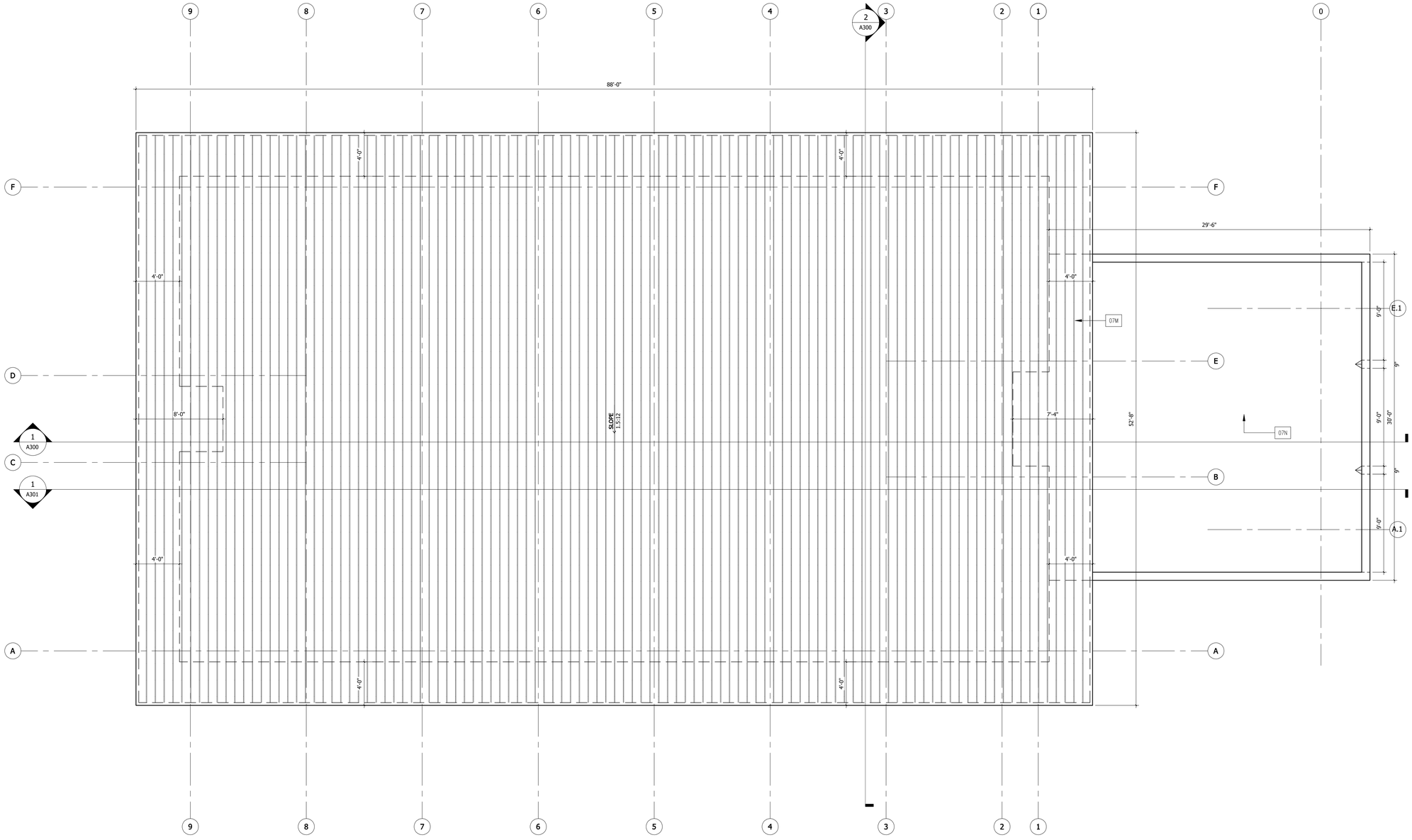

ROOF PLAN

SCALE: 3/16"=1'-0"

ARCHITECTURE + ENGINEERING
License No. 26002939
License No. 102538
1230 Oakley Seaver Drive, Suite 200 - Clermont, FL 34711
P: 888-850-FFAE (3323)
www.forefrontae.com
FOREFRONT
Service Beyond Design

REVISION

0	00/00/00

SENIOR CENTER

22174 US HIGHWAY 331 N PAXTON FL 32567

ROOF PLAN

ANY DISCREPANCY OR ERROR IN DIMENSIONS TO BE BROUGHT TO THE ATTENTION OF THE DESIGN PROFESSIONAL FOR CLARIFICATION PRIOR TO COMMENCEMENT OF CONSTRUCTION.

JOB #: 21-17367

DATE: 05/24/24

A103

J:\Walton County\Jobs\Aging Facility\21-17367-05- Code Update\Dwgs\Sheets\Architectural\A103 ROOF PLAN ; Plot Date: Thursday, May 30, 2024,3:19:12 PM; Plotted By: patriciam

© FOREFRONT ARCHITECTURE & ENGINEERING LLC 2014 THIS DOCUMENT AND/OR THE DESIGN CONCEPTS EXPRESSED HEREIN ARE THE PROPERTY OF FOREFRONT ARCHITECTURE & ENGINEERING LLC AND ALL RIGHTS OF OWNERSHIP, INCLUDING COPYRIGHT OF INTELLECTUAL PROPERTY, ARE RESERVED. ANY REPRODUCTIONS, COPYING, OR USE OF THIS DOCUMENT AND/OR THE DESIGN CONCEPT WITHOUT THE WRITTEN CONSENT OF FOREFRONT ARCHITECTURE & ENGINEERING LLC IS STRICTLY PROHIBITED AND PROTECTED BY UNITED STATES AND INTERNATIONAL LAW. IF PRINTED ON 11X17 SCALE IS HALF THE SIZE NOTED.

REFERENCE KEYNOTES

SENIOR CENTER

09A	-	3"X12" BULLNOSE DALTILE ADVANTAGE - OFF WHITE - COLOR AR30 - FINISH: MATTE - P43C9 - OR EQUAL
09B	-	METAL STUD GYP. BOARD HALF WALL
09K	-	BASEBOARD - REAL WOODS - RWBA- 03(9/16" X 5-1/4") - OR EQUAL
09S	-	24"X24" DALTILE- SUPERIOR SLIP RESISTANT FLOOR TILE. MODEL: SCRIPER - MENTOR SQUARE - COLOR: AR62 - MATTE - OR EQUAL
09T	-	PRIMER B28W08601 - WHITE COLOR W/ PAINT FINISH B30W12651 - SW9547 VESSEL COLOR - OR SIMILAR
09U	-	12"X12" DALTILE ADVANTAGE - OFF WHITE - COLOR AR30 - FINISH: MATTE - OR EQUAL
09W	-	TAILORED FOAM W/ L&K ARCHITECTURAL -1" POLYRESIN FAUX WOOD WRAP OR EQUAL
10AC	-	GRAB BARS, PROVIDE BLOCKING IN WALLS
10AD	-	TOILET PAPER HOLDER, PROVIDE BLOCKING AT WALLS - BORRICK OR EQUAL
10AE	-	SURFACE MOUNTED SEAT COVER DISPENSER, PROVIDE BLOCKING AT WALL
10AG	-	MIRROR. PROVIDE BLOCKING AT WALL
10H	-	SOAP DISPENSER - BOBRICK OR EQUAL
10J	-	TOWEL PAPER DISPENSER - BOBRICK OR EQUAL
10V	-	KOALA KARE KB200-00 HORIZONTAL BABY CHANGING STATION OR EQUAL
11J	-	ICE MAKER
11K	-	DISHWASHER
11Q	-	FRIDGE
12A	-	GRANITE COUNTERTOP
12B	-	CABINET/ MILLWORK W/ COUNTERTOP OR SHELF
22A	-	ADA WATER CLOSET - FLUSH TANK / KOHLER_ K-5298-0 OR EQUAL
22B	-	SINK FAUCET - KOHLER_K-10415 OR EQUAL
22F	-	FAUCET_MOEN COMMERCIAL -8948
22J	-	DOUBLE BOWL UNDERMOUNT SINK W/ PERFECT DRAIN - ELKAY_ELUH3118PD OR EQUAL
22R	-	STAINLESS STEEL HAND SINK_ATLANTA CULINARY EQUIP. - HS-1615IH
22S	-	ADA WALL MOUNTED SINK - KOHLER_K1997-4-0

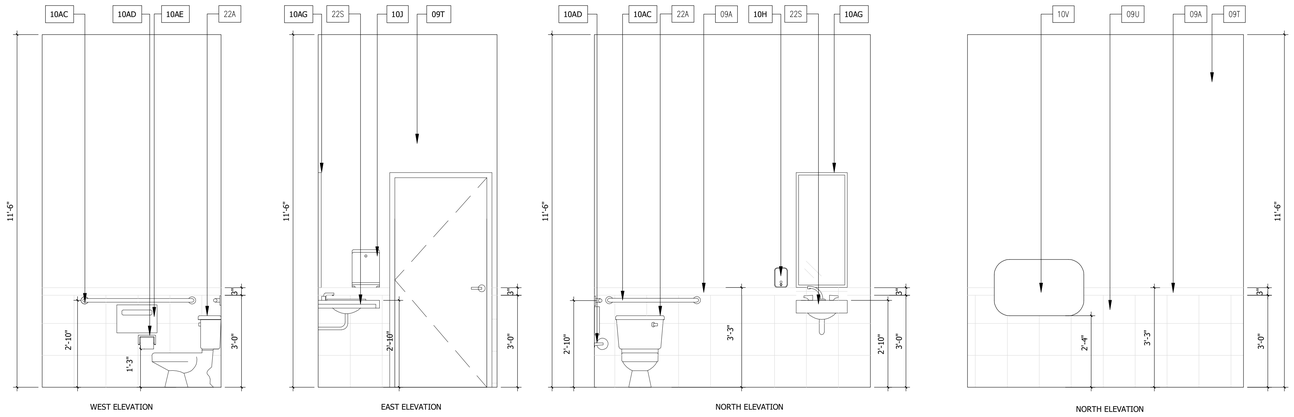

WEST ELEVATION | EAST ELEVATION | NORTH ELEVATION | NORTH ELEVATION

4 MEN RESTROOM - INTERIOR ELEVATIONS

SCALE: 1/2"=1'-0"

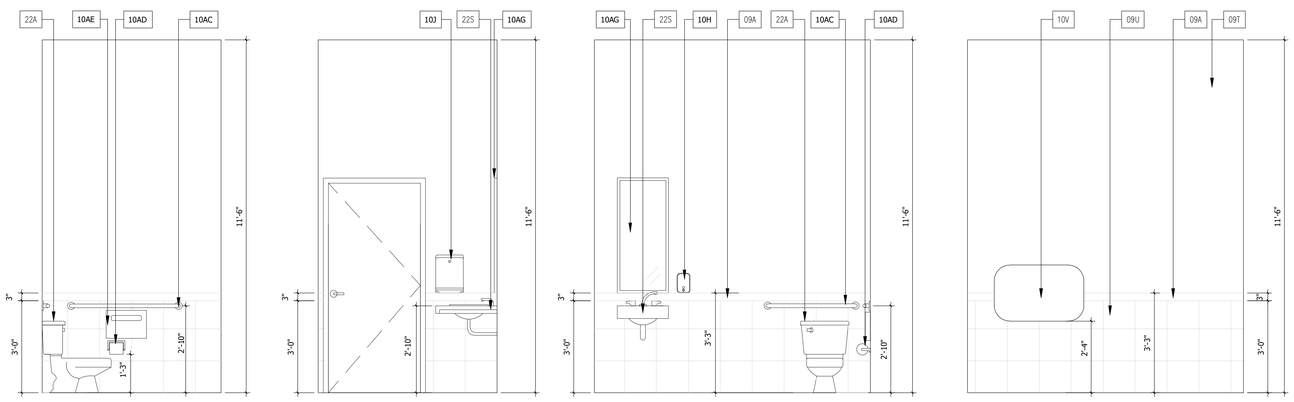

WEST ELEVATION | EAST ELEVATION | SOUTH ELEVATION | NORTH ELEVATION

3 WOMEN RESTROOM - INTERIOR ELEVATIONS

SCALE: 1/2"=1'-0"

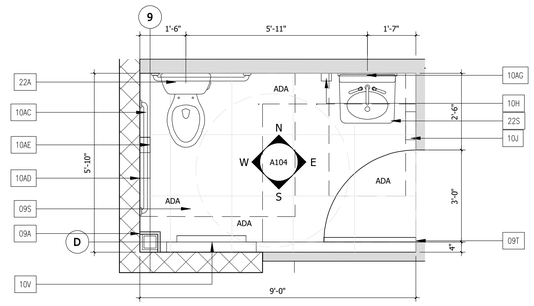

2 MEN RESTROOM - ENLARGED PLAN

SCALE: 1/2"=1'-0"

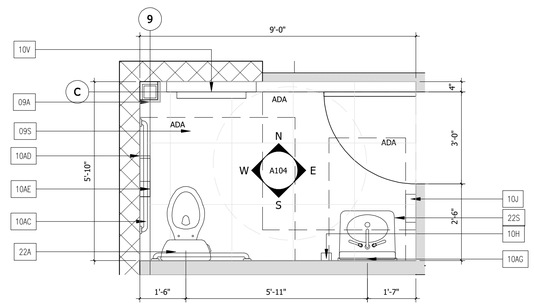

1 WOMEN RESTROOM - ENLARGED PLAN

SCALE: 1/2"=1'-0"

REVISION
0 | 00/00/00

ARCHITECTURE + ENGINEERING
License No. 26002939 License No. 102538
1230 Oakley Seaver Drive, Suite 200 - Clermont, FL 34711
P: 888-850-FFAE (3323)
www.forefrontae.com
FOREFRONT
Service Beyond Design

SENIOR CENTER

22174 US HIGHWAY 331 N PAXTON FL 32567

ENLARGED PLAN AND INT. ELEVATIONS - RESTROOMS

ANY DISCREPANCY OR ERROR IN DIMENSIONS OR NOTES SHALL BE BROUGHT TO THE ATTENTION OF THE DESIGN PROFESSIONAL FOR CLARIFICATION PRIOR TO COMMENCEMENT OF CONSTRUCTION.

JOB #: 21-17367
DATE: 05/24/24

A104

© FOREFRONT ARCHITECTURE & ENGINEERING LLC 2014 THIS DOCUMENT AND/OR THE DESIGN CONCEPTS EXPRESSED HEREIN ARE THE PROPERTY OF FOREFRONT ARCHITECTURE & ENGINEERING LLC AND ALL RIGHTS OF OWNERSHIP, INCLUDING COPYRIGHT OF INTELLECTUAL PROPERTY, ARE RESERVED. ANY REPRODUCTIONS, COPYING, OR USE OF THIS DOCUMENT AND/OR THE DESIGN CONCEPT WITHOUT THE WRITTEN CONSENT OF FOREFRONT ARCHITECTURE & ENGINEERING LLC IS STRICTLY PROHIBITED AND PROTECTED BY UNITED STATES AND INTERNATIONAL LAW. IF PRINTED ON 11X17 SCALE IS HALF THE SIZE NOTED.

REFERENCE KEYNOTES

SENIOR CENTER

09A	-	3"X12" BULLNOSE DALTILE ADVANTAGE - OFF WHITE - COLOR AR30 - FINISH: MATTE - P43C9 - OR EQUAL
09B	-	METAL STUD GYP. BOARD HALF WALL
09K	-	BASEBOARD - REAL WOODS - RWBA- 03(9/16" X 5-1/4") - OR EQUAL
09S	-	24"X24" DALTILE- SUPERIOR SLIP RESISTANT FLOOR TILE. MODEL: SCRIPER - MENTOR SQUARE - COLOR: AR62 - MATTE - OR EQUAL
09T	-	PRIMER B28W08601 - WHITE COLOR W/ PAINT FINISH B30W12651 - SW9547 VESSEL COLOR - OR SIMILAR
09U	-	12"X12" DALTILE ADVANTAGE - OFF WHITE - COLOR AR30 - FINISH: MATTE - OR EQUAL
09W	-	TAILORED FOAM W/ L&K ARCHITECTURAL -1" POLYRESIN FAUX WOOD WRAP OR EQUAL
10AC	-	GRAB BARS, PROVIDE BLOCKING IN WALLS
10AD	-	TOILET PAPER HOLDER, PROVIDE BLOCKING AT WALLS - BORRICK OR EQUAL
10AE	-	SURFACE MOUNTED SEAT COVER DISPENSER, PROVIDE BLOCKING AT WALL
10AG	-	MIRROR. PROVIDE BLOCKING AT WALL
10H	-	SOAP DISPENSER - BOBRICK OR EQUAL
10J	-	TOWEL PAPER DISPENSER - BOBRICK OR EQUAL
10V	-	KOALA KARE KB200-00 HORIZONTAL BABY CHANGING STATION OR EQUAL
11J	-	ICE MAKER
11K	-	DISHWASHER
11Q	-	FRIDGE
12A	-	GRANITE COUNTERTOP
12B	-	CABINET/ MILLWORK W/ COUNTERTOP OR SHELF
22A	-	ADA WATER CLOSET - FLUSH TANK / KOHLER_ K-5298-0 OR EQUAL
22B	-	SINK FAUCET - KOHLER_K-10415 OR EQUAL
22F	-	FAUCET_MOEN COMMERCIAL -8948
22J	-	DOUBLE BOWL UNDERMOUNT SINK W/ PERFECT DRAIN - ELKAY_ELUH3118PD OR EQUAL
22R	-	STAINLESS STEEL HAND SINK_ATLANTA CULINARY EQUIP. - HS-1615IH
22S	-	ADA WALL MOUNTED SINK - KOHLER_K1997-4-0

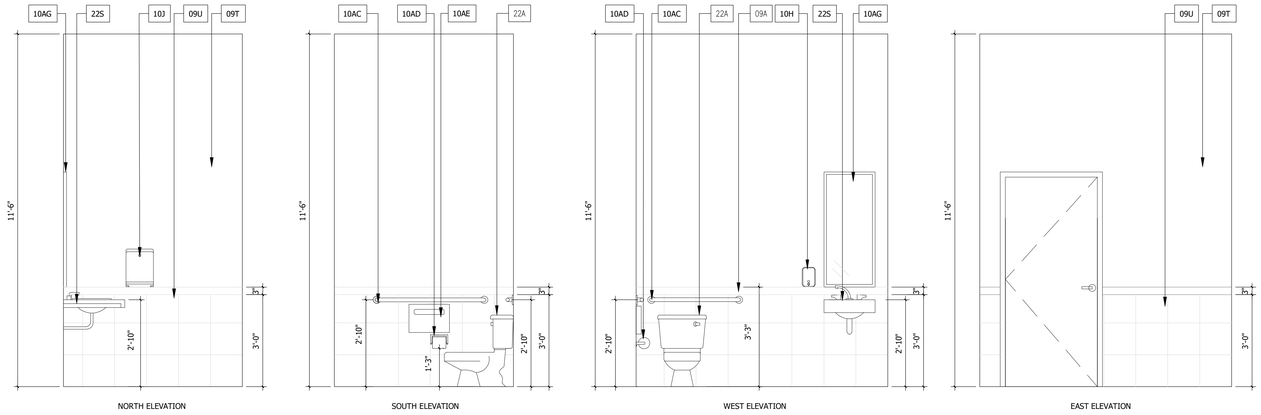

NORTH ELEVATION | SOUTH ELEVATION | WEST ELEVATION | EAST ELEVATION

4 RESTROOM - INTERIOR ELEVATIONS

SCALE: 1/2"=1'-0"

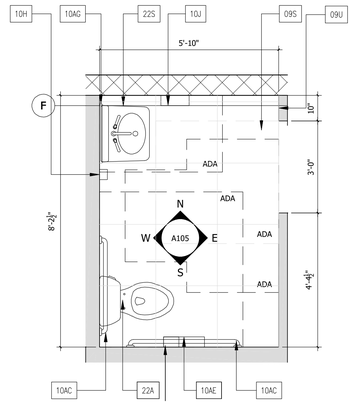

2 RESTROOM - ENLARGED PLAN

SCALE: 1/2"=1'-0"

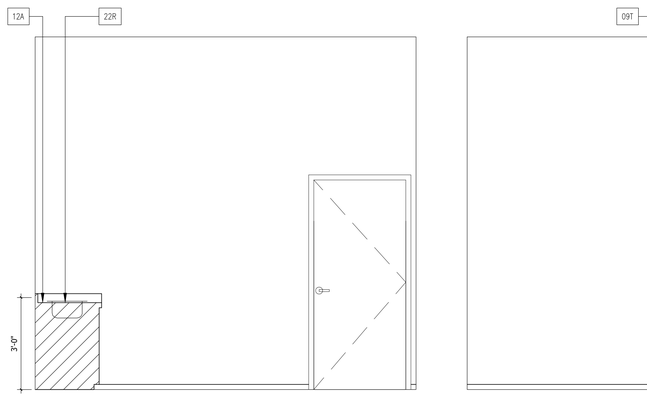

SOUTH ELEVATION | WEST ELEVATION | NORTH ELEVATION | EAST ELEVATION

3 RECEPTION AREA - INTERIOR ELEVATIONS

SCALE: 3/8"=1'-0"

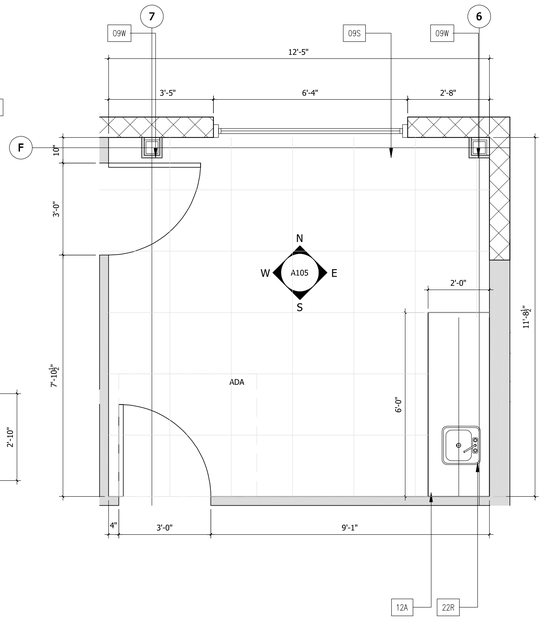

1 RECEPTION AREA - ENLARGED PLAN

SCALE: 3/8"=1'-0"

ARCHITECTURE + ENGINEERING
License No. 102538
1230 Oakley Seaver Drive, Suite 200 - Clermont, FL 34711
P: 888-850-FFAE (3323)
www.forefrontae.com
License No. 26002939
FOREFRONT
Service Beyond Design

REVISION	
0	00/00/00

SENIOR CENTER

22174 US HIGHWAY 331 N PAXTON FL 32567

ENLARGED PLAN AND INT. ELEV. - RESTROOM AND RECEPT. AREA

ANY DISCREPANCY OR ERROR IN DIMENSIONS OR NOTES SHALL BE BROUGHT TO THE ATTENTION OF THE ARCHITECT PRIOR TO CLARIFICATION FROM START OF CONSTRUCTION.

JOB #: 21-17367
DATE: 05/24/24

A105

J:\Walton County\Jobs\Aging Facility\21-17367-05- Code Update\Dwgs\Sheets\Architectural\A105 ENLARGED PLAN AND INT. ELEV. - RESTROOM AND RECEPT. AREA , Plot Date: Thursday, May 30, 2024,3:20:10 PM; Plotted By: patriciam

© FOREFRONT ARCHITECTURE & ENGINEERING LLC 2014 THIS DOCUMENT AND/OR THE DESIGN CONCEPTS EXPRESSED HEREIN ARE THE PROPERTY OF FOREFRONT ARCHITECTURE & ENGINEERING LLC AND ALL RIGHTS OF OWNERSHIP, INCLUDING COPYRIGHT OF INTELLECTUAL PROPERTY, ARE RESERVED. ANY REPRODUCTIONS, COPYING, OR USE OF THIS DOCUMENT AND/OR THE DESIGN CONCEPT WITHOUT THE WRITTEN CONSENT OF FOREFRONT ARCHITECTURE & ENGINEERING LLC IS STRICTLY PROHIBITED AND PROTECTED BY UNITED STATES AND INTERNATIONAL LAW. IF PRINTED ON 11X17 SCALE IS HALF THE SIZE NOTED.

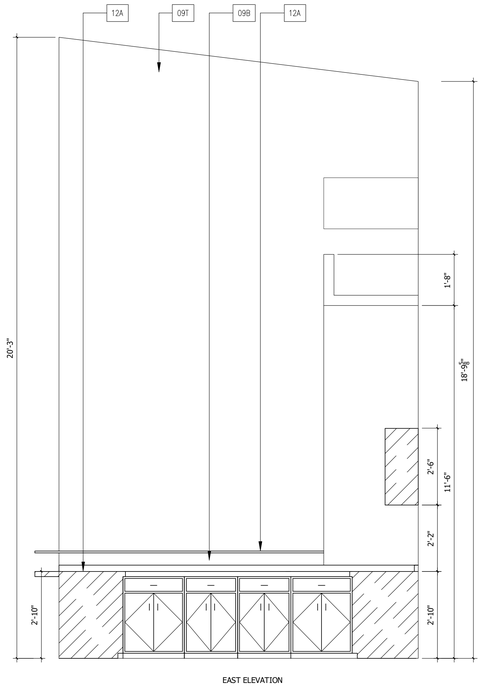

EAST ELEVATION

3 SERVING AREA - INTERIOR ELEVATIONS

SCALE: 3/8"=1'-0"

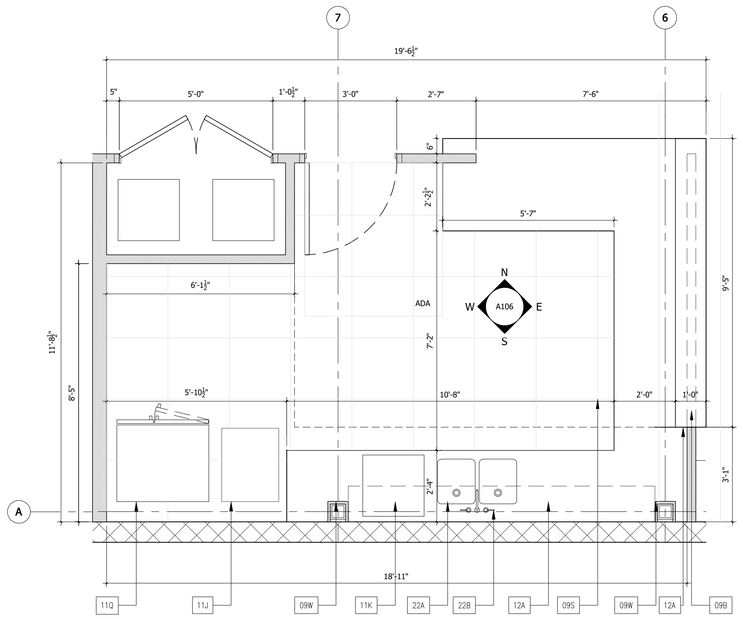

2 SERVING AREA - ENLARGED PLAN

SCALE: 3/8"=1'-0"

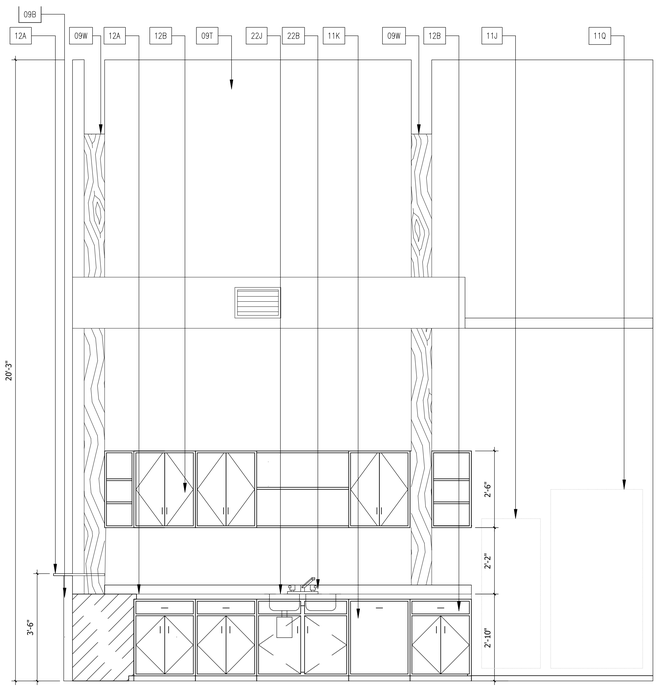

SOUTH ELEVATION

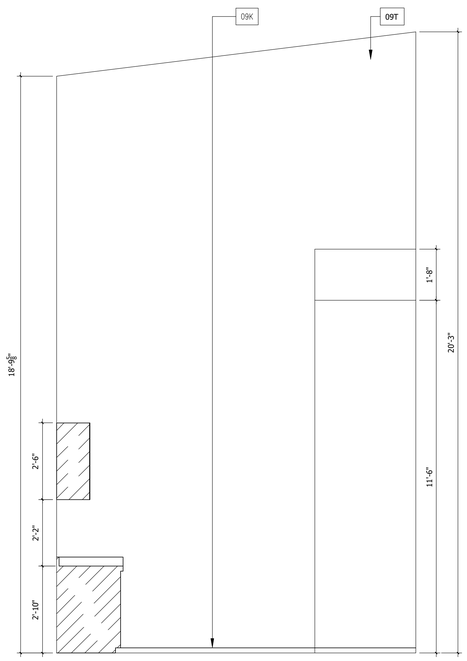

WEST ELEVATION

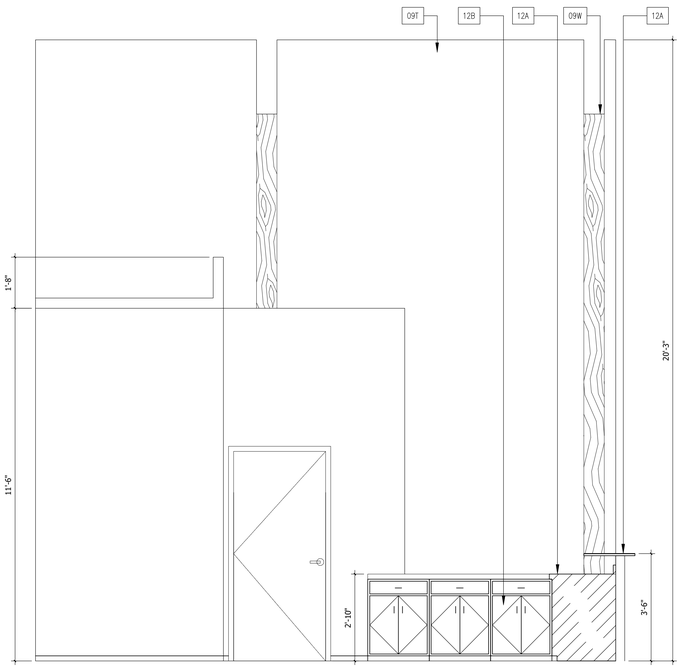

NORTH ELEVATION

1 SERVING AREA - INTERIOR ELEVATIONS

SCALE: 3/8"=1'-0"

REFERENCE KEYNOTES

SENIOR CENTER

09A	-	3"X12" BULLNOSE DALTILE ADVANTAGE - OFF WHITE - COLOR AR30 - FINISH: MATTE - P43C9 - OR EQUAL
09B	-	METAL STUD GYP. BOARD HALF WALL
09K	-	BASEBOARD - REAL WOODS - RWBA- 03(9/16" X 5-1/4") - OR EQUAL
09S	-	24"X24" DALTILE- SUPERIOR SLIP RESISTANT FLOOR TILE. MODEL: SCRIPER - MENTOR SQUARE - COLOR: AR62 - MATTE - OR EQUAL
09T	-	PRIMER B28W08601 - WHITE COLOR W/ PAINT FINISH B30W12651 - SW9547 VESSEL COLOR - OR SIMILAR
09U	-	12"X12" DALTILE ADVANTAGE - OFF WHITE - COLOR AR30 - FINISH: MATTE - OR EQUAL
09W	-	TAILORED FOAM W/ L&K ARCHITECTURAL -1" POLYRESIN FAUX WOOD WRAP OR EQUAL
10AC	-	GRAB BARS, PROVIDE BLOCKING IN WALLS
10AD	-	TOILET PAPER HOLDER, PROVIDE BLOCKING AT WALLS - BORRICK OR EQUAL
10AE	-	SURFACE MOUNTED SEAT COVER DISPENSER, PROVIDE BLOCKING AT WALL
10AG	-	MIRROR. PROVIDE BLOCKING AT WALL
10H	-	SOAP DISPENSER - BOBRICK OR EQUAL
10J	-	TOWEL PAPER DISPENSER - BOBRICK OR EQUAL
10V	-	KOALA KARE KB200-00 HORIZONTAL BABY CHANGING STATION OR EQUAL
11J	-	ICE MAKER
11K	-	DISHWASHER
11Q	-	FRIDGE
12A	-	GRANITE COUNTERTOP
12B	-	CABINET/ MILLWORK W/ COUNTERTOP OR SHELF
22A	-	ADA WATER CLOSET - FLUSH TANK / KOHLER_ K-5298-0 OR EQUAL
22B	-	SINK FAUCET - KOHLER_K-10415 OR EQUAL
22F	-	FAUCET_MOEN COMMERCIAL -8948
22J	-	DOUBLE BOWL UNDERMOUNT SINK W/ PERFECT DRAIN - ELKAY_ELUH3118PD OR EQUAL
22R	-	STAINLESS STEEL HAND SINK_ATLANTA CULINARY EQUIP. - HS-1615IH
22S	-	ADA WALL MOUNTED SINK - KOHLER_K1997-4-0

ARCHITECTURE + ENGINEERING
License No. 102638
1230 Oakley Seaver Drive, Suite 200 - Clermont, FL 34711
License No. 26002939
P: 888-850-FFAE (3323)
www.forefrontae.com
FOREFRONT
Service Beyond Design

REVISION	
0	00/00/00

SENIOR CENTER

22174 US HIGHWAY 331 N PAXTON FL 32567

ENLARGED PLAN AND INT. ELEVATIONS - SERVING AREA

ANY DISCREPANCY OR ERROR IN DIMENSIONS OR NOTES SHALL BE BROUGHT TO THE ATTENTION OF THE DESIGN PROFESSIONAL FOR CLARIFICATION PRIOR TO COMMENCEMENT OF CONSTRUCTION.

JOB #: 21-17367
DATE: 05/24/24

A106

J:\Walton County\Jobs\Aging Facility\21-17367-55- Code Update\Dwgs\Sheets\Architectural\A106 ENLARGED PLAN AND INT. ELEVATIONS - SERVING AREA , Plot Date: Thursday, May 30, 2024,3:20:34 PM, Plotted By: patriciam

© FOREFRONT ARCHITECTURE & ENGINEERING LLC 2014 THIS DOCUMENT AND/OR THE DESIGN CONCEPTS EXPRESSED HEREIN ARE THE PROPERTY OF FOREFRONT ARCHITECTURE & ENGINEERING LLC AND ALL RIGHTS OF OWNERSHIP, INCLUDING COPYRIGHT OF INTELLECTUAL PROPERTY, ARE RESERVED. ANY REPRODUCTIONS, COPYING, OR USE OF THIS DOCUMENT AND/OR THE DESIGN CONCEPT WITHOUT THE WRITTEN CONSENT OF FOREFRONT ARCHITECTURE & ENGINEERING LLC IS STRICTLY PROHIBITED AND PROTECTED BY UNITED STATES AND INTERNATIONAL LAW. IF PRINTED ON 11X17 SCALE IS HALF THE SIZE NOTED.

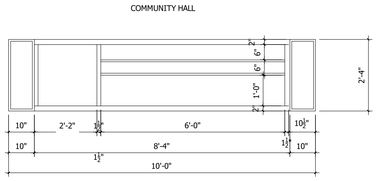

6 SECTION CC

SCALE: 3/8"=1'-0"

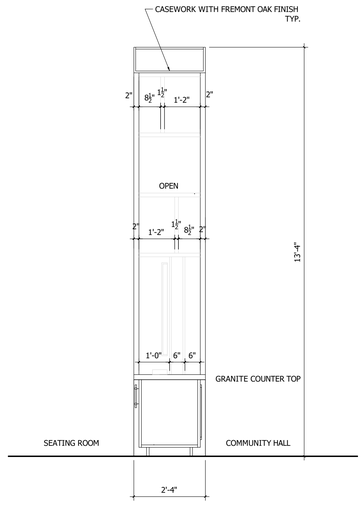

5 SECTION BB

SCALE: 1/2"=1'-0"

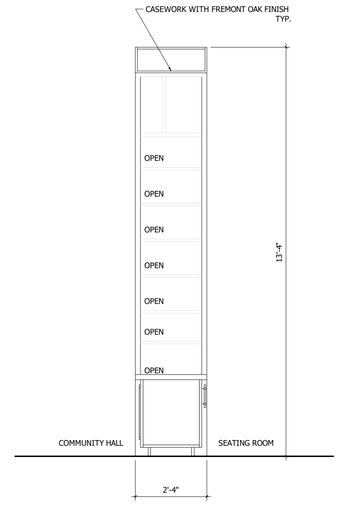

4 SECTION A

SCALE: 1/2"=1'-0"

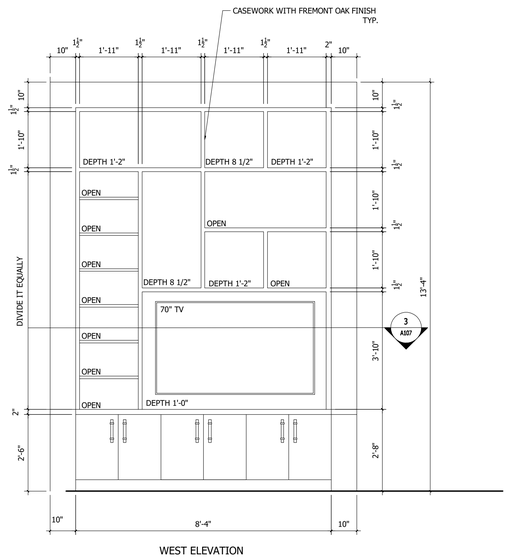

3 SEATING ROOM ELEVATION

SCALE: 1/2"=1'-0"

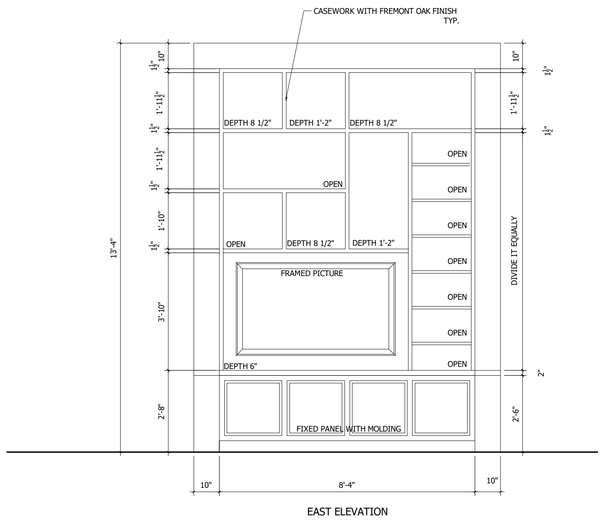

2 COMMUNITY HALL ELEVATION

SCALE: 1/2"=1'-0"

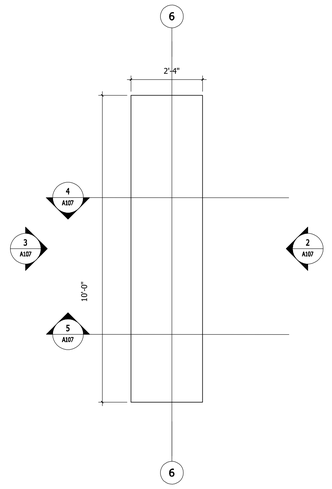

1 BOOKSHELVES - ENLARGED PLAN

SCALE: 1/2"=1'-0"

REVISION	
0	00/00/00

ARCHITECTURE + ENGINEERING
License No. 102538
License No. 26002939
1230 Oakley Seaver Drive, Suite 200 - Clermont, FL 34711
P: 888-850-FFAE (3323)
www.forefrontae.com
FOREFRONT
Service Beyond Design

SEAL

SENIOR CENTER

22174 US HIGHWAY 331 N PAXTON FL 32567

ENLARGED PLAN AND INT. ELEVATIONS- BOOKSHELVES

ANY DISCREPANCY OR ERROR IN DIMENSIONS OR NOTES SHALL BE BROUGHT TO THE ATTENTION OF THE ARCHITECTS PROFESSIONAL IN CHARGE FOR CLARIFICATION PRIOR TO COMMENCEMENT OF CONSTRUCTION.

JOB #: 21-17367
DATE: 05/24/24

A107

© FOREFRONT ARCHITECTURE & ENGINEERING LLC 2014 THIS DOCUMENT AND/OR THE DESIGN CONCEPTS EXPRESSED HEREIN ARE THE PROPERTY OF FOREFRONT ARCHITECTURE & ENGINEERING LLC AND ALL RIGHTS OF OWNERSHIP, INCLUDING COPYRIGHT OF INTELLECTUAL PROPERTY, ARE RESERVED. ANY REPRODUCTIONS, COPYING, OR USE OF THIS DOCUMENT AND/OR THE DESIGN CONCEPT WITHOUT THE WRITTEN CONSENT OF FOREFRONT ARCHITECTURE & ENGINEERING LLC IS STRICTLY PROHIBITED AND PROTECTED BY UNITED STATES AND INTERNATIONAL LAW. IF PRINTED ON 11X17 SCALE IS HALF THE SIZE NOTED.

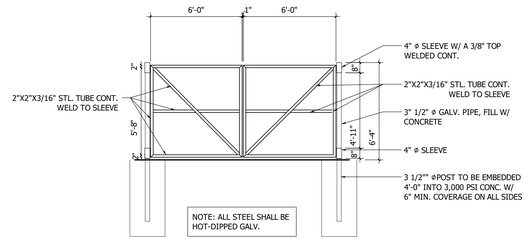

9 DUMPSTER - GATE DESIGN

SCALE: 1/4"=1'-0"

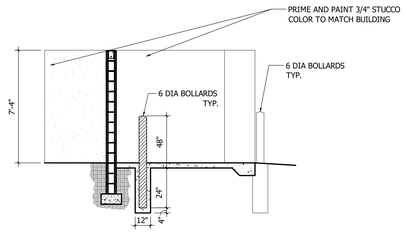

8 DUMPSTER - SECTION

SCALE: 1/4"=1'-0"

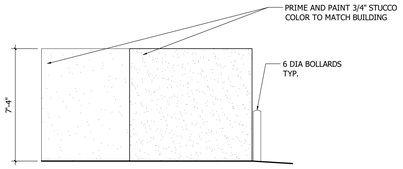

7 DUMPSTER - SOUTH ELEVATION

SCALE: 1/4"=1'-0"

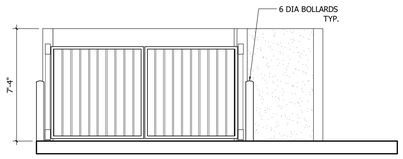

6 DUMPSTER - EAST ELEVATION

SCALE: 1/4"=1'-0"

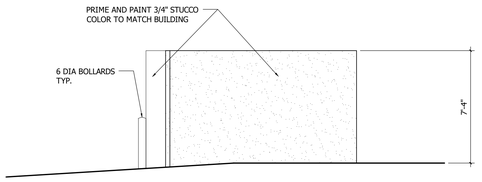

5 DUMPSTER - NORTH ELEVATION

SCALE: 1/4"=1'-0"

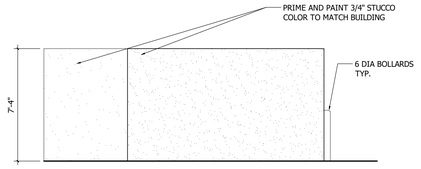

4 DUMPSTER - WEST ELEVATION

SCALE: 1/4"=1'-0"

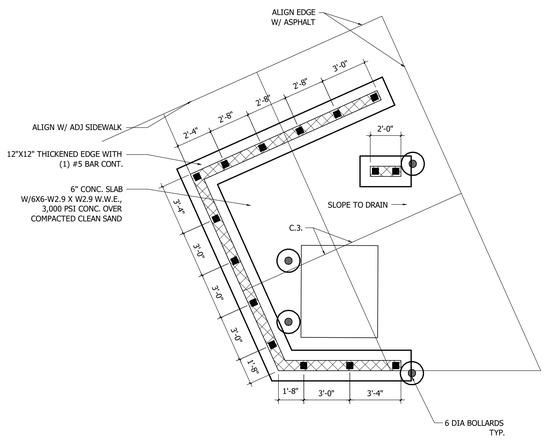

3 DUMPSTER - FOUNDATION FLOOR PLAN

SCALE: 1/4"=1'-0"

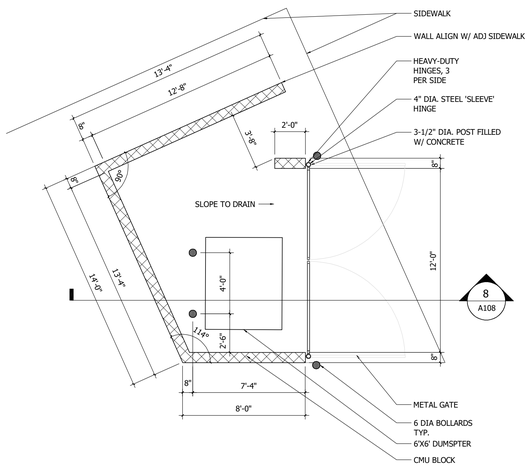

2 DUMPSTER - FLOOR PLAN

SCALE: 1/4"=1'-0"

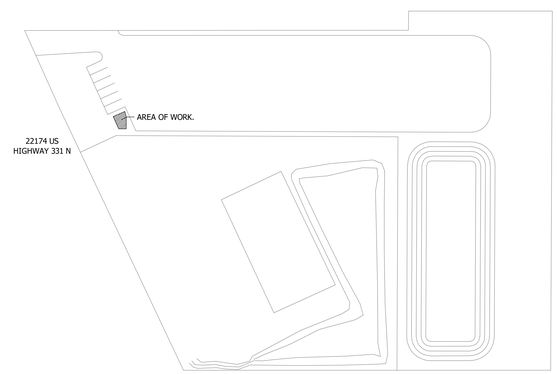

1 KEYPLAN

SCALE: 1/64"=1'-0"

ARCHITECTURE + ENGINEERING
License No. 102538
1230 Oakley Seaver Drive, Suite 200 - Clermont, FL 34711
License No. 26002939
P: 888-850-FFAE (3323)
www.forefrontae.com
FOREFRONT
Service Beyond Design

REVISION
0 | 00/00/00

SENIOR CENTER
22174 US HIGHWAY 331 N PAXTON FL 32567
DUMPSTER ENCLOSURE

ANY DISCREPANCY OR ERROR IN DIMENSIONS OR NOTES SHALL BE BROUGHT TO THE ATTENTION OF THE DESIGN PROFESSIONAL FOR CLARIFICATION PRIOR TO COMMENCEMENT OF CONSTRUCTION.

JOB #: 21-17367
DATE: 05/24/24

A108

J:\Walton County\Jobs\Aging Facility\21-17367-05- Code Update\Dwgs\Sheets\Architectural\A108 ENCLOSED DUMPTER ; Plot Date: Thursday, May 30, 2024,3:21:18 PM; Plotted By: patricam

© FOREFRONT ARCHITECTURE & ENGINEERING LLC 2014 THIS DOCUMENT AND/OR THE DESIGN CONCEPTS EXPRESSED HEREIN ARE THE PROPERTY OF FOREFRONT ARCHITECTURE & ENGINEERING LLC AND ALL RIGHTS OF OWNERSHIP, INCLUDING COPYRIGHT OF INTELLECTUAL PROPERTY, ARE RESERVED. ANY REPRODUCTIONS, COPYING, OR USE OF THIS DOCUMENT AND/OR THE DESIGN CONCEPT WITHOUT THE WRITTEN CONSENT OF FOREFRONT ARCHITECTURE & ENGINEERING LLC IS STRICTLY PROHIBITED AND PROTECTED BY UNITED STATES AND INTERNATIONAL LAW. IF PRINTED ON 11X17 SCALE IS HALF THE SIZE NOTED.

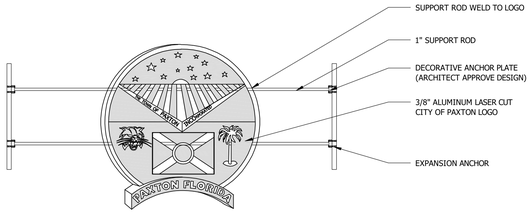

2 LOGO DETAIL WEST

SCALE: N/A

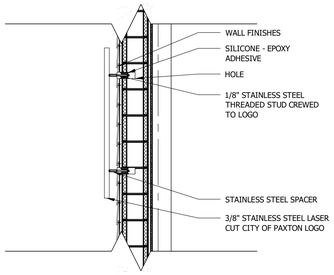

1 LOGO DETAIL NORTH

SCALE: N/A

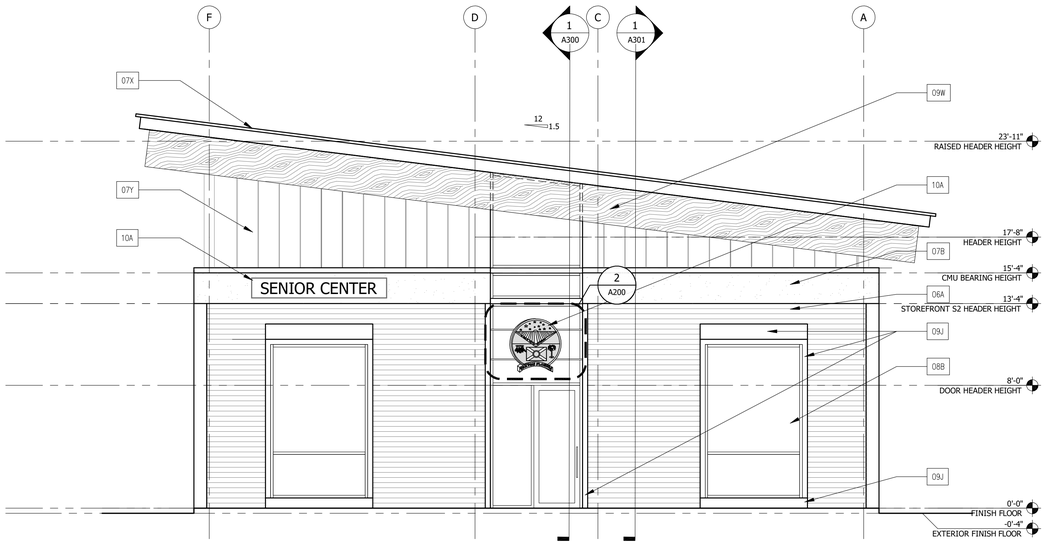

WEST ELEVATION

SCALE: 3/16"=1'-0"

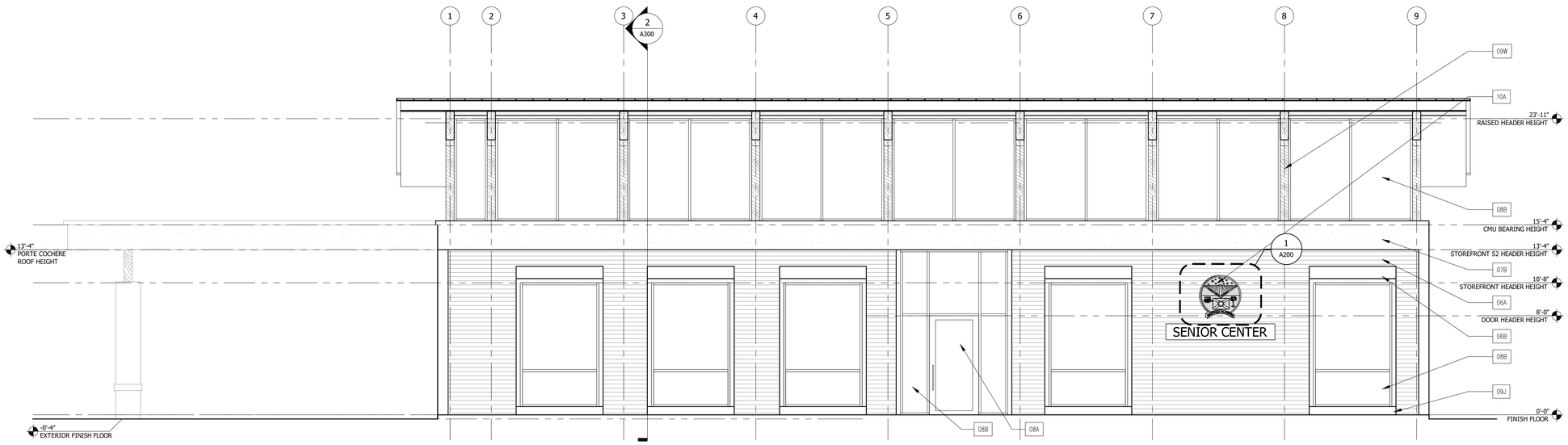

NORTH ELEVATION

SCALE: 3/16"=1'-0"

EXTERIOR FINISH LEGEND

SYMBOL	DESCRIPTION
	PAINT: FIRST COLOR STUCCO: SMOOTH FINISH
	HARDIE PLANK LAPSIDING - EXPOSURE 6"- SELECT CEDARMILL - COLOR COBBLE STONE - OR SIMILAR
	L&K ARCHITECTURAL - 1" POLYRESIN FAUX WOOD WRAP OR EQUAL WITH APPROVAL.
	16" WIDTH STANDING SEAM METAL ROOF AND METAL WALL

REFERENCE KEYNOTES

SENIOR CENTER

- 06A - HARDIE PLANK LAPSIDING - EXPOSURE 6"- SELECT CEDARMILL - COLOR COBBLE STONE - OR SIMILAR
- 06B - 1X2 PT FURRING STRIPS. 16" O.C.
- 07B - PAINTED STUCCO FINISH
- 07X - STANDING SEAM METAL ROOF - COLOR: MANSARD BROWN OR SIMILAR
- 07Y - STANDING SEAM METAL WALL - COLOR: DOVE GRAY OR SIMILAR
- 08A - ALUMINUM DOOR - COLOR: DARK BRONZE
- 08B - ALUMINUM FIXED WINDOW SYSTEM - COLOR: DARK BRONZE
- 09J - STUCCO BAND
- 09W - TAILORED FOAM W/ L&K ARCHITECTURAL -1" POLYRESIN FAUX WOOD WRAP OR EQUAL
- 10A - EXTERIOR SIGNAGE BY OTHERS

REVISION
0 | 00/00/00

ARCHITECTURE + ENGINEERING
License No. 102538
License No. 26002939
1230 Oakley Seaver Drive, Suite 200 - Clermont, FL 34711
P: 888-850-FFAE (3323)
www.forefrontae.com
FOREFRONT
Service Beyond Design

SEAL

SENIOR CENTER

22174 US HIGHWAY 331 N PAXTON FL 32567

ELEVATIONS

ANY DISCREPANCY OR ERROR IN DIMENSIONS OR NOTES SHALL BE BROUGHT TO THE ATTENTION OF THE DESIGN PROFESSIONAL FOR CLARIFICATION PRIOR TO COMMENCEMENT OF CONSTRUCTION.

JOB #: 21-17367
DATE: 05/24/24

A200

J:\Walton County\Jobs\Aging Facility\21-17367-05- Code Update\Dwgs\Sheets\Architectural\A200 ELEVATIONS ; Plot Date: Thursday, May 30, 2024,3:21:53 PM; Plotted By: patriciam

© FOREFRONT ARCHITECTURE & ENGINEERING LLC 2014 THIS DOCUMENT AND/OR THE DESIGN CONCEPTS EXPRESSED HEREIN ARE THE PROPERTY OF FOREFRONT ARCHITECTURE & ENGINEERING LLC AND ALL RIGHTS OF OWNERSHIP, INCLUDING COPYRIGHT OF INTELLECTUAL PROPERTY, ARE RESERVED. ANY REPRODUCTIONS, COPYING, OR USE OF THIS DOCUMENT AND/OR THE DESIGN CONCEPT WITHOUT THE WRITTEN CONSENT OF FOREFRONT ARCHITECTURE & ENGINEERING LLC IS STRICTLY PROHIBITED AND PROTECTED BY UNITED STATES AND INTERNATIONAL LAW. IF PRINTED ON 11X17 SCALE IS HALF THE SIZE NOTED.

EXTERIOR FINISH LEGEND	
SYMBOL	DESCRIPTION
	PAINT: FIRST COLOR STUCCO: SMOOTH FINISH
	HARDIE PLANK LAPSIDING - EXPOSURE 6"- SELECT CEDARMILL - COLOR COBBLE STONE - OR SIMILAR
	L&K ARCHITECTURAL - 1" POLYRESIN FAUX WOOD WRAP OR EQUAL WITH APPROVAL.
	16" WIDTH STANDING SEAM METAL ROOF AND METAL WALL

REFERENCE KEYNOTES

SENIOR CENTER

06A	-	HARDIE PLANK LAPSIDING - EXPOSURE 6"- SELECT CEDARMILL - COLOR COBBLE STONE - OR SIMILAR
06B	-	1X2 PT FURRING STRIPS. 16" O.C.
07B	-	PAINTED STUCCO FINISH
07X	-	STANDING SEAM METAL ROOF - COLOR: MANSARD BROWN OR SIMILAR
07Y	-	STANDING SEAM METAL WALL - COLOR: DOVE GRAY OR SIMILAR
08A	-	ALUMINUM DOOR - COLOR: DARK BRONZE
08B	-	ALUMINUM FIXED WINDOW SYSTEM - COLOR: DARK BRONZE
09J	-	STUCCO BAND
09W	-	TAILORED FOAM W/ L&K ARCHITECTURAL -1" POLYRESIN FAUX WOOD WRAP OR EQUAL
10A	-	EXTERIOR SIGNAGE BY OTHERS

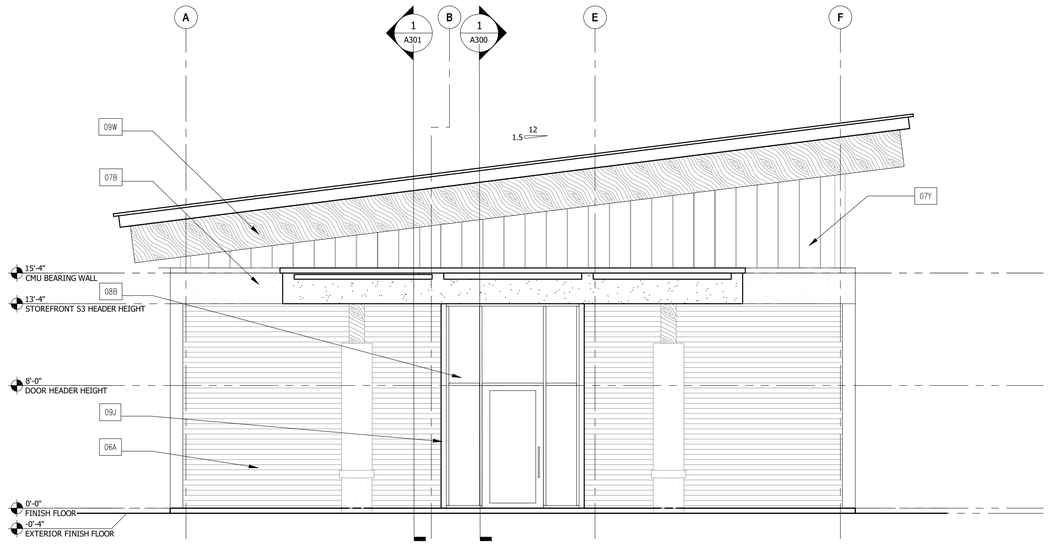

EAST ELEVATION

SCALE: 3/16"=1'-0"

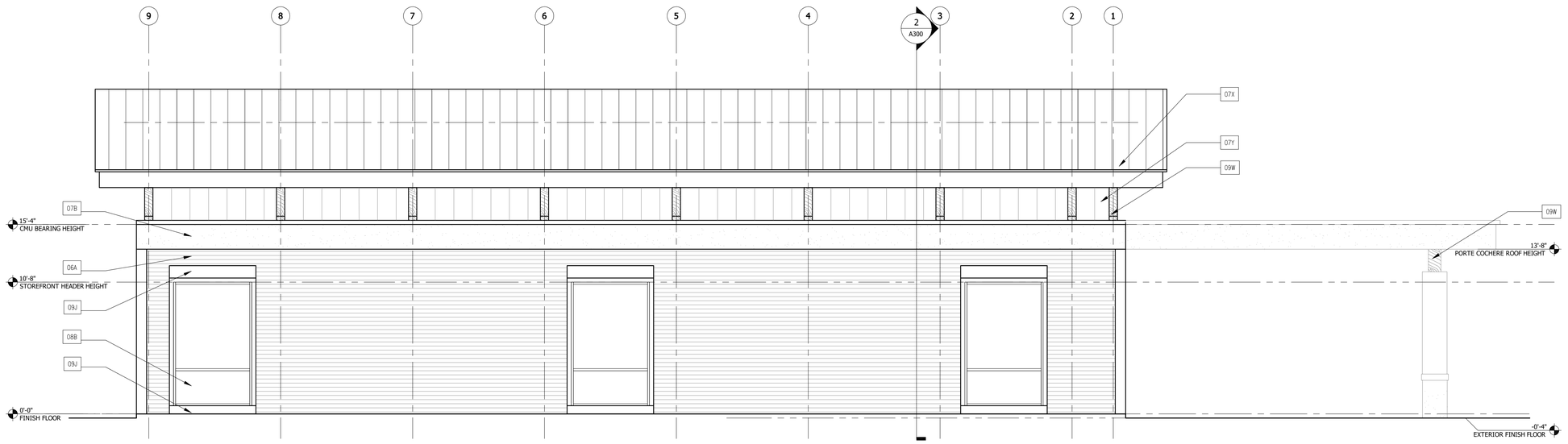

SOUTH ELEVATION

SCALE: 3/16"=1'-0"

ARCHITECTURE + ENGINEERING
License No. 102538
License No. 26002939
1230 Oakley Seaver Drive, Suite 200 - Clermont, FL 34711
P: 888-950-FFAE (3323)
www.forefrontae.com
FOREFRONT
Service Beyond Design

REVISION	
0	00/00/00

SENIOR CENTER

22174 US HIGHWAY 331 N PAXTON FL 32567

ELEVATIONS

ANY DISCREPANCY OR ERROR IN DIMENSIONS OR NOTES SHALL BE BROUGHT TO THE ATTENTION OF THE DESIGN PROFESSIONAL FOR CLARIFICATION PRIOR TO COMMENCEMENT OF CONSTRUCTION.

JOB #: 21-17367
DATE: 05/24/24

A201

J:\Walton County\Jobs\Aging Facility\21-17367-05- Code Update\Dwgs\Sheets\Architectural\A201 ELEVATIONS ; Plot Date: Thursday, May 30, 2024,3:22:20 PM; Plotted By: patriciam

© FOREFRONT ARCHITECTURE & ENGINEERING LLC 2014 THIS DOCUMENT AND/OR THE DESIGN CONCEPTS EXPRESSED HEREIN ARE THE PROPERTY OF FOREFRONT ARCHITECTURE & ENGINEERING LLC AND ALL RIGHTS OF OWNERSHIP, INCLUDING COPYRIGHT OF INTELLECTUAL PROPERTY, ARE RESERVED. ANY REPRODUCTIONS, COPYING, OR USE OF THIS DOCUMENT AND/OR THE DESIGN CONCEPT WITHOUT THE WRITTEN CONSENT OF FOREFRONT ARCHITECTURE & ENGINEERING LLC IS STRICTLY PROHIBITED AND PROTECTED BY UNITED STATES AND INTERNATIONAL LAW. IF PRINTED ON 11x17 SCALE IS HALF THE SIZE NOTED.

REFERENCE KEYNOTES

SENIOR CENTER

04E	-	8"X8"X16" CMU BLOCK W/INJECTED FOAM INSULATION (FOR R-VALUES SEE THE ENERGY CONSERVATION RE
04H	-	BOND BEAM, SEE STRUCTURAL DRAWINGS
05C	-	2 1/2" METAL STUD
05D	-	METAL COLUM, SEE STRUCTURAL DRAWINGS
05E	-	3 1/2" METAL STUD
05T	-	BEAM, SEE STRUCTURAL DRAWINGS
06A	-	HARDIE PLANK LAPSIDING - EXPOSURE 6"- SELECT CEDARMILL - COLOR COBBLE STONE - OR SIMILAR
06B	-	1X2 PT FURRING STRIPS. 16" O.C.
07A	-	BATT INSULATION (R-13)
07E	-	DRIP EDGE FLASHING
07M	-	16" WIDTH STANDING SEAM METAL ROOF
08A	-	ALUMINUM DOOR - COLOR: DARK BRONZE
08B	-	ALUMINUM FIXED WINDOW SYSTEM - COLOR: DARK BRONZE
09C	-	DRY BLOCK WATERPROOF PAINT
09E	-	1/2"DRYWALL
09J	-	STUCCO BAND
09L	-	STUCCO CORNER BEAD
09W	-	TAILORED FOAM W/ L&K ARCHITECTURAL -1" POLYRESIN FAUX WOOD WRAP OR EQUAL
12B	-	CABINET/ MILLWORK W/ COUNTERTOP OR SHELF
23A	-	DUCTWORK, SEE MECHANICAL DRAWINGS
23B	-	WALL MOUNTED GRILL

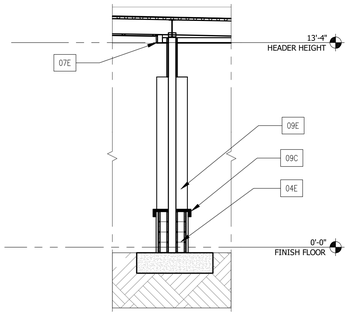

3 COLUMN SECTION DETAIL

SCALE: 1/4"=1'-0"

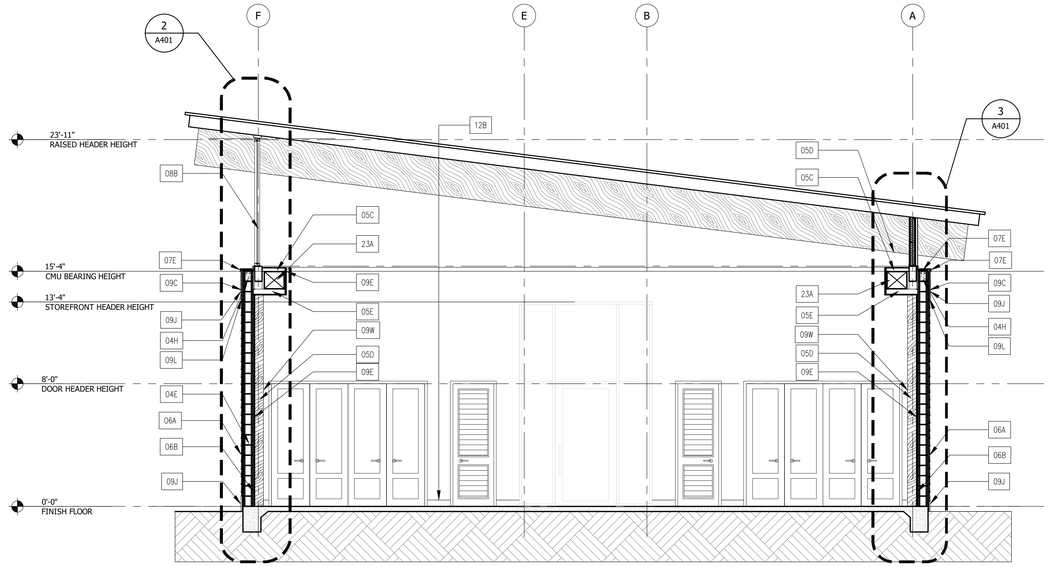

2 PERPENDICULAR BUILDING SECTION B-B

SCALE: 1/4"=1'-0"

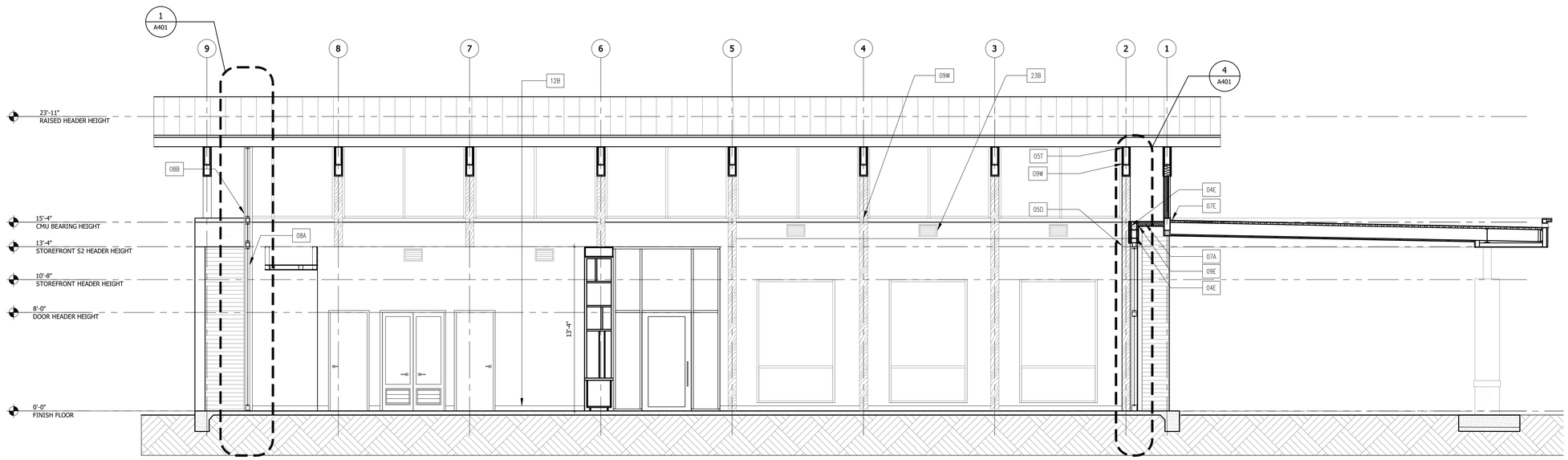

1 LONGITUDINAL BUILDING SECTION A-A

SCALE: 1/4"=1'-0"

ARCHITECTURE + ENGINEERING
License No. 102538
1230 Oakley Seaver Drive, Suite 200 - Clermont, FL 34711
License No. 26002939
P: 888-350-FFAE (3323)
www.forefrontae.com
FOREFRONT
Service Beyond Design

REVISION
0 | 00/00/00

SENIOR CENTER

22174 US HIGHWAY 331 N PAXTON FL 32567

BUILDING SECTIONS

ANY DISCREPANCY OR ERROR IN DIMENSIONS OR NOTES SHALL BE BROUGHT TO THE ATTENTION OF THE DESIGN PROFESSIONAL FOR CLARIFICATION PRIOR TO COMMENCEMENT OF CONSTRUCTION.

JOB #: 21-17367
DATE: 05/24/24

A300

J:\Walton County\Jobs\Aging Facility\21-17367-05- Code Update\Dwgs\Sheets\Architectural\A300 Building Sections .; Plot Date: Thursday, May 30, 2024,3:22:36 PM; Plotted By: patriciam

© FOREFRONT ARCHITECTURE & ENGINEERING LLC 2014 THIS DOCUMENT AND/OR THE DESIGN CONCEPTS EXPRESSED HEREIN ARE THE PROPERTY OF FOREFRONT ARCHITECTURE & ENGINEERING LLC AND ALL RIGHTS OF OWNERSHIP, INCLUDING COPYRIGHT OF INTELLECTUAL PROPERTY, ARE RESERVED. ANY REPRODUCTIONS, COPYING, OR USE OF THIS DOCUMENT AND/OR THE DESIGN CONCEPT WITHOUT THE WRITTEN CONSENT OF FOREFRONT ARCHITECTURE & ENGINEERING LLC IS STRICTLY PROHIBITED AND PROTECTED BY UNITED STATES AND INTERNATIONAL LAW. IF PRINTED ON 11X17 SCALE IS HALF THE SIZE NOTED.

REFERENCE KEYNOTES

SENIOR CENTER

04E	-	8"X8"X16" CMU BLOCK W/INJECTED FOAM INSULATION (FOR R-VALUES SEE THE ENERGY CONSERVATION REPORT)
04H	-	BOND BEAM, SEE STRUCTURAL DRAWINGS
05C	-	2 1/2" METAL STUD
05D	-	METAL COLUM, SEE STRUCTURAL DRAWINGS
05E	-	3 1/2" METAL STUD
05T	-	BEAM, SEE STRUCTURAL DRAWINGS
06A	-	HARDIE PLANK LAPSIDING - EXPOSURE 6"- SELECT CEDARMILL - COLOR COBBLE STONE - OR SIMILAR
06B	-	1X2 PT FURRING STRIPS. 16" O.C.
07A	-	BATT INSULATION (R-13)
07E	-	DRIP EDGE FLASHING
07M	-	16" WIDTH STANDING SEAM METAL ROOF
08A	-	ALUMINUM DOOR - COLOR: DARK BRONZE
08B	-	ALUMINUM FIXED WINDOW SYSTEM - COLOR: DARK BRONZE
09C	-	DRY BLOCK WATERPROOF PAINT
09E	-	1/2"DRYWALL
09J	-	STUCCO BAND
09L	-	STUCCO CORNER BEAD
09W	-	TAILORED FOAM W/ L&K ARCHITECTURAL -1" POLYRESIN FAUX WOOD WRAP OR EQUAL
12B	-	CABINET/ MILLWORK W/ COUNTERTOP OR SHELF
23A	-	DUCTWORK, SEE MECHANICAL DRAWINGS
23B	-	WALL MOUNTED GRILL

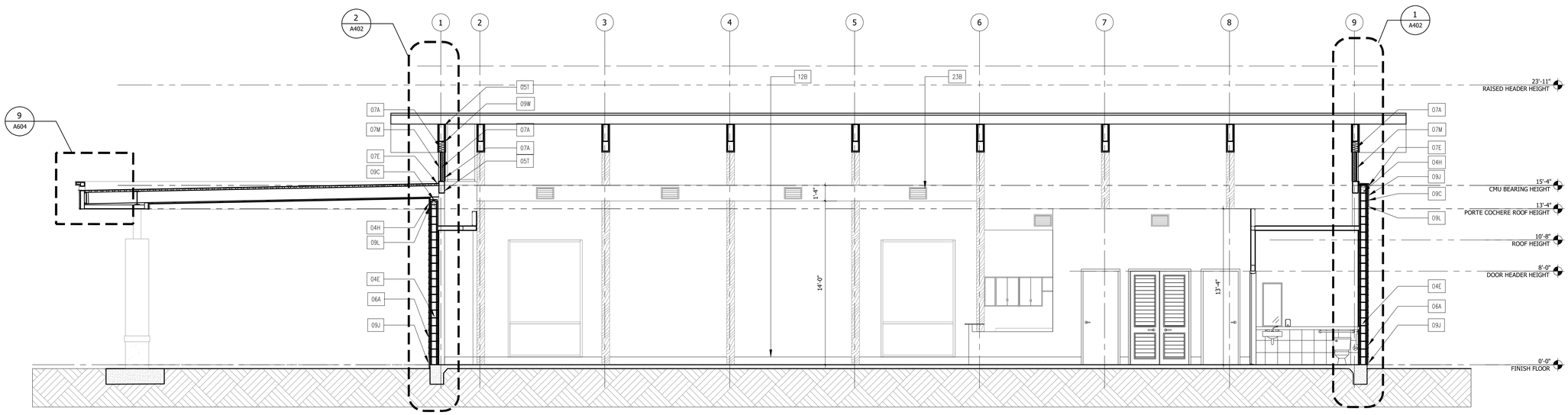

1 LONGITUDINAL BUILDING SECTION A-A

SCALE: 3/16"=1'-0"

REVISION
0 | 00/00/00

ARCHITECTURE + ENGINEERING
License No. 26002939 License No. 102538
1230 Oakley Seaver Drive, Suite 200 - Clermont, FL 34711
P: 888-850-FFAE (3323)
www.forefrontae.com
FOREFRONT
Service Beyond Design

SENIOR CENTER

22174 US HIGHWAY 331 N PAXTON FL 32567

BUILDING SECTIONS

ANY DISCREPANCY OR ERROR IN DIMENSIONS OR NOTES SHALL BE BROUGHT TO THE ATTENTION OF THE DESIGN PROFESSIONAL FOR CLARIFICATION PRIOR TO COMMENCEMENT OF CONSTRUCTION.

JOB #: 21-17367
DATE: 05/24/24

A301

J:\Walton County\Jobs\Aging Facility\21-17367-05- Code Update\Dwgs\Sheets\Architectural\A301 BUILDING SECTIONS ; Plot Date: Thursday, May 30, 2024,3:22:48 PM; Plotted By: patriciam

© FOREFRONT ARCHITECTURE & ENGINEERING LLC 2014 THIS DOCUMENT AND/OR THE DESIGN CONCEPTS EXPRESSED HEREIN ARE THE PROPERTY OF FOREFRONT ARCHITECTURE & ENGINEERING LLC AND ALL RIGHTS OF OWNERSHIP, INCLUDING COPYRIGHT OF INTELLECTUAL PROPERTY, ARE RESERVED. ANY REPRODUCTIONS, COPYING, OR USE OF THIS DOCUMENT AND/OR THE DESIGN CONCEPT WITHOUT THE WRITTEN CONSENT OF FOREFRONT ARCHITECTURE & ENGINEERING LLC IS STRICTLY PROHIBITED AND PROTECTED BY UNITED STATES AND INTERNATIONAL LAW. IF PRINTED ON 11X17 SCALE IS HALF THE SIZE NOTED.

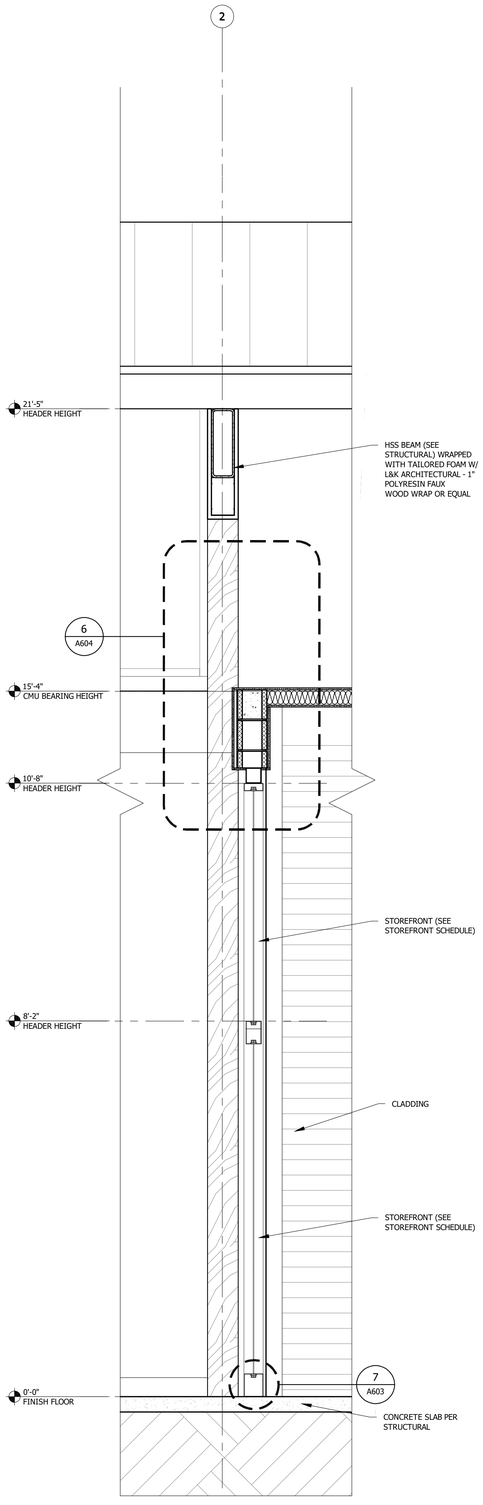

4 **WALL SECTION**
SCALE: 3/4"=1'-0"

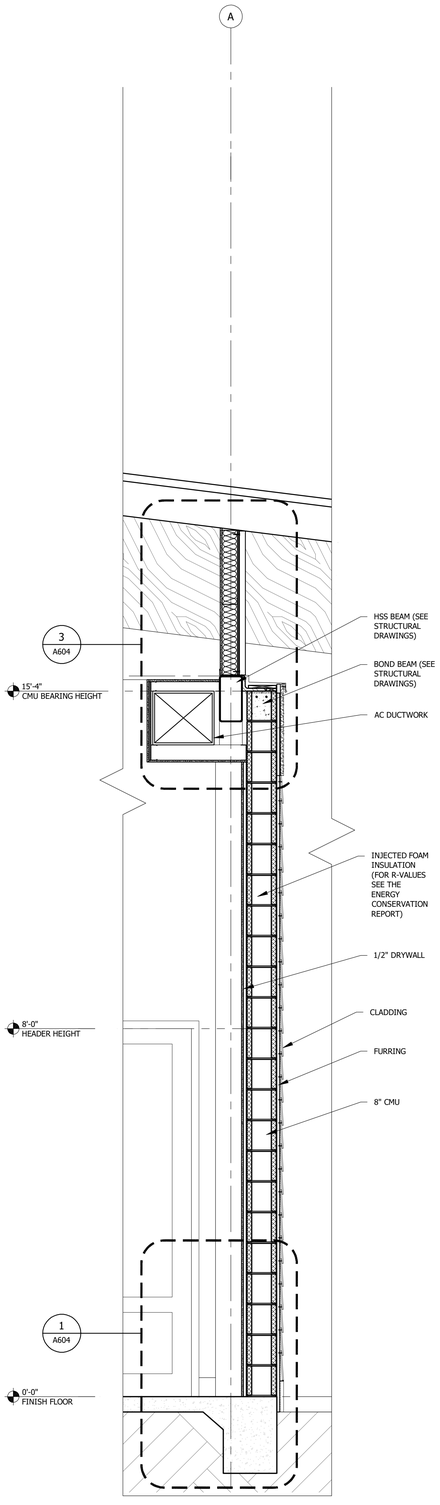

3 **WALL SECTION**
SCALE: 3/4"=1'-0"

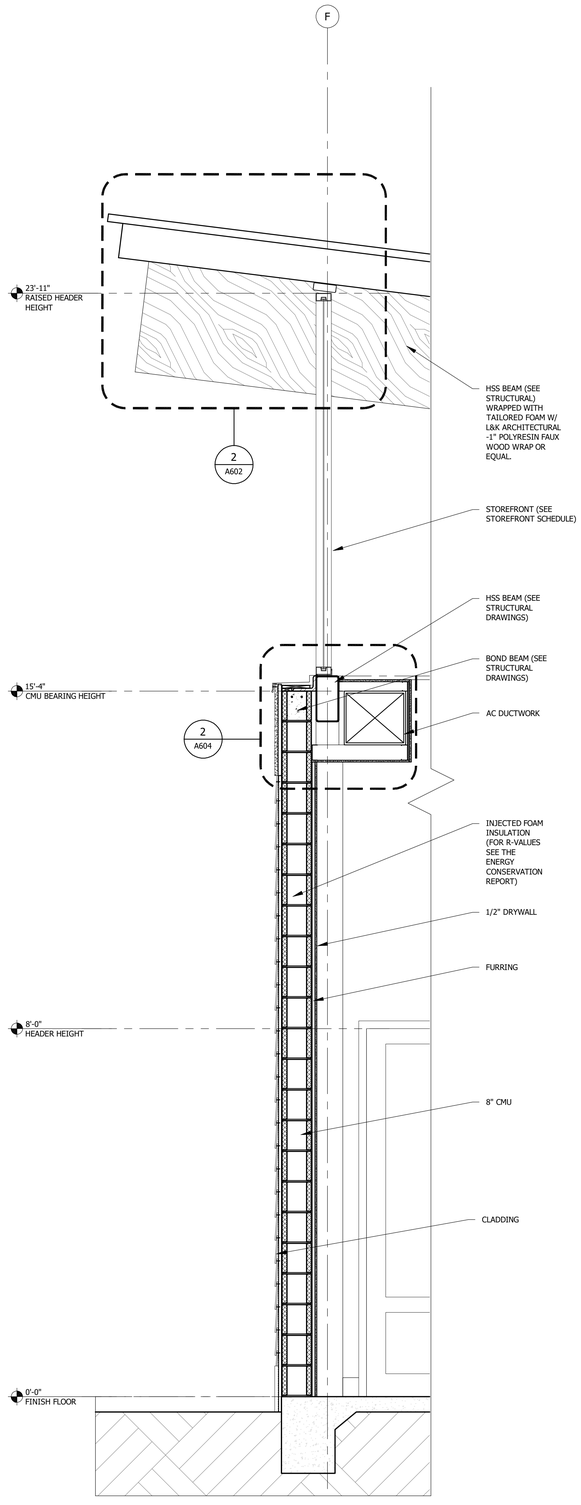

2 **WALL SECTION**
SCALE: 3/4"=1'-0"

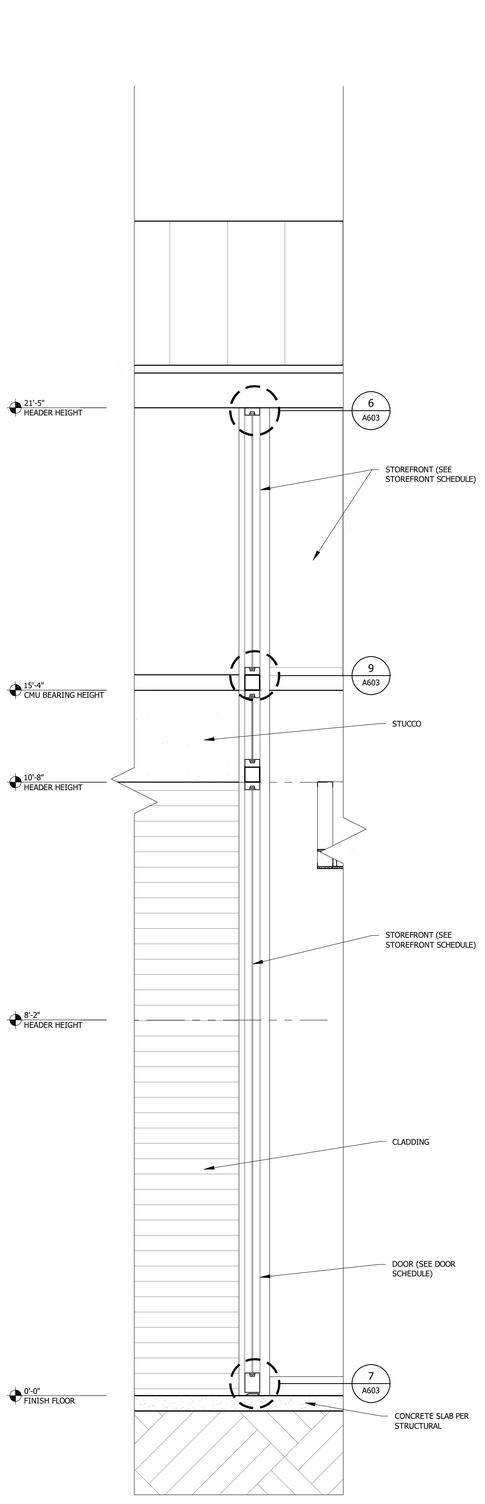

1 **WALL SECTION**
SCALE: 3/4"=1'-0"

REVISION
0 | 00/00/00

ARCHITECTURE + ENGINEERING
License No. 102538
License No. 26002939
1230 Oakley Seaver Drive, Suite 200 - Clermont, FL 34711
P: 888-950-FFAE (3323)
www.forefrontae.com
FOREFRONT
Service Beyond Design

SENIOR CENTER
22174 US HIGHWAY 331 N PAXTON FL 32567
WALL SECTIONS

ANY DISCREPANCY OR ERROR IN DIMENSIONS OR NOTES SHALL BE BROUGHT TO THE ATTENTION OF THE DESIGN PROFESSIONAL FOR CLARIFICATION PRIOR TO COMMENCEMENT OF CONSTRUCTION.

JOB #: 21-17367
DATE: 05/24/24

A401

© FOREFRONT ARCHITECTURE & ENGINEERING LLC 2014 THIS DOCUMENT AND/OR THE DESIGN CONCEPTS EXPRESSED HEREIN ARE THE PROPERTY OF FOREFRONT ARCHITECTURE & ENGINEERING LLC AND ALL RIGHTS OF OWNERSHIP, INCLUDING COPYRIGHT OF INTELLECTUAL PROPERTY, ARE RESERVED. ANY REPRODUCTIONS, COPYING, OR USE OF THIS DOCUMENT AND/OR THE DESIGN CONCEPT WITHOUT THE WRITTEN CONSENT OF FOREFRONT ARCHITECTURE & ENGINEERING LLC IS STRICTLY PROHIBITED AND PROTECTED BY UNITED STATES AND INTERNATIONAL LAW. IF PRINTED ON 11X17 SCALE IS HALF THE SIZE NOTED.

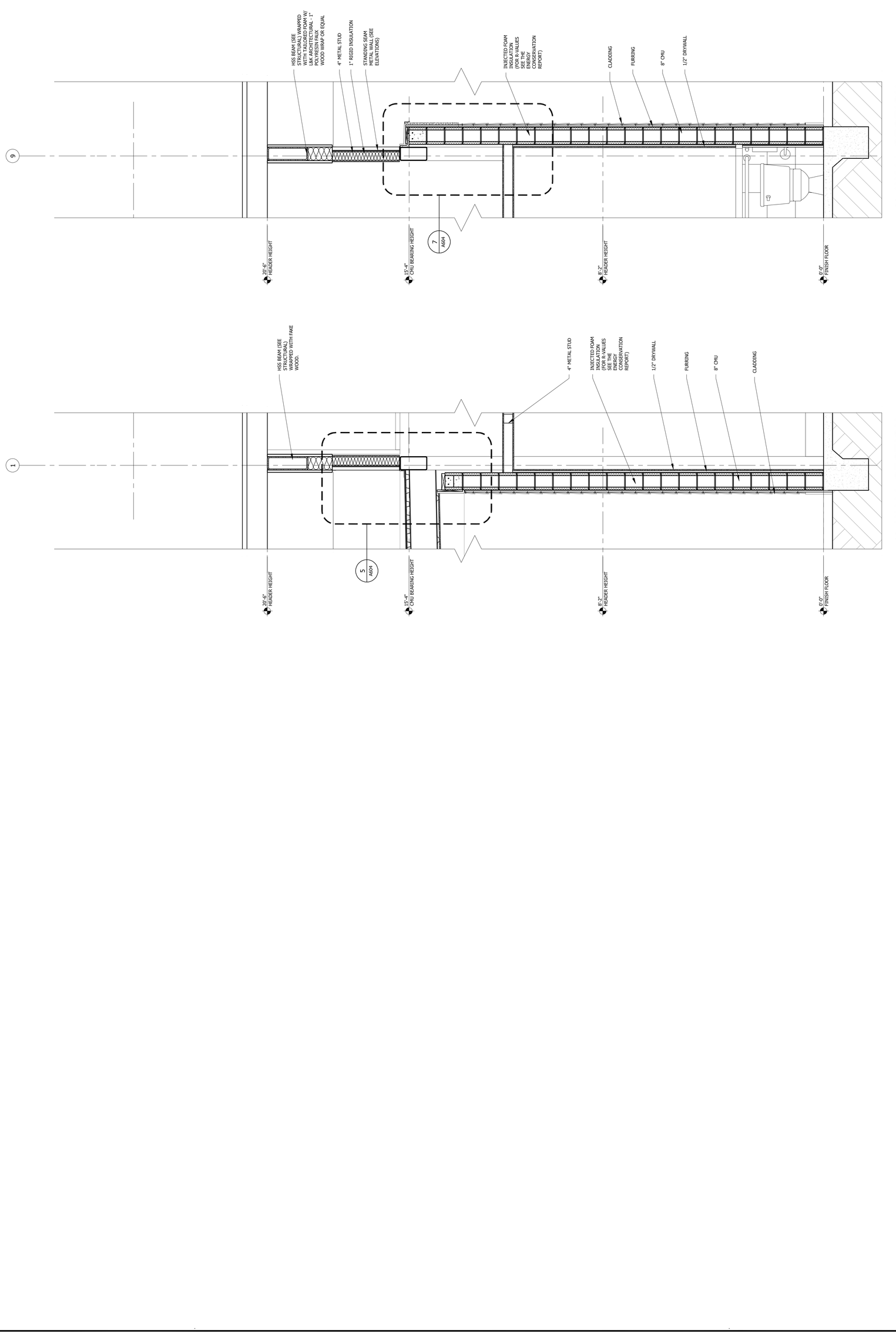

ARCHITECTURE + ENGINEERING
License No. AR98800 License No. CA30900
1230 Oakley Seaver Drive, Suite 100 - Clermont, FL 34711
P: 888-850-FFAE (3323)
www.forefrontia.com
FOREFRONT
Service Beyond Design

NO.	REVISION	DATE
0	90% REVIEW	05/09/2022

SENIOR CENTER

22174 US HIGHWAY 331 N PAXTON FL 32567

WALL SECTIONS

MARION COUNTY FLORIDA
WATER · RECREATION · GREENWAYS

ANY DISCREPANCIES OR ERRORS IN THE CONTRACT DOCUMENTS MUST BE BROUGHT TO THE ATTENTION OF THE ARCHITECT PRIOR TO THE COMMENCEMENT OF CONSTRUCTION.

JOB # 21-17267
DATE 05/09/22
SHEET **A402**

© FOREFRONT ARCHITECTURE & ENGINEERING LLC 2014 THIS DOCUMENT AND THE IDEAS AND DESIGNS INCORPORATED HEREIN ARE THE PROPERTY OF FOREFRONT ARCHITECTURE & ENGINEERING LLC AND ALL RIGHTS OF OWNERSHIP, INCLUDING COPYRIGHT OF INTELLECTUAL PROPERTY, ARE RESERVED. ANY REPRODUCTION, COPYING, OR USE OF THIS DOCUMENT AND/OR THE IDEAS/DESIGN CONCEPT WITHOUT THE WRITTEN CONSENT OF FOREFRONT ARCHITECTURE & ENGINEERING LLC IS STRICTLY PROHIBITED AND PROTECTED BY UNITED STATES AND INTERNATIONAL LAW. IF PRINTED ON 11X17 SCALE IS HALF THE SIZE NOTED.

J:\Various Counts\Working Facility\21-17267-SC - Gold Video\Design\Elevations\Arch\A402 WALL SECTIONS - Plot Date: Thursday, May 05, 2022 2:23:26 PM - Plotted By: jpierson

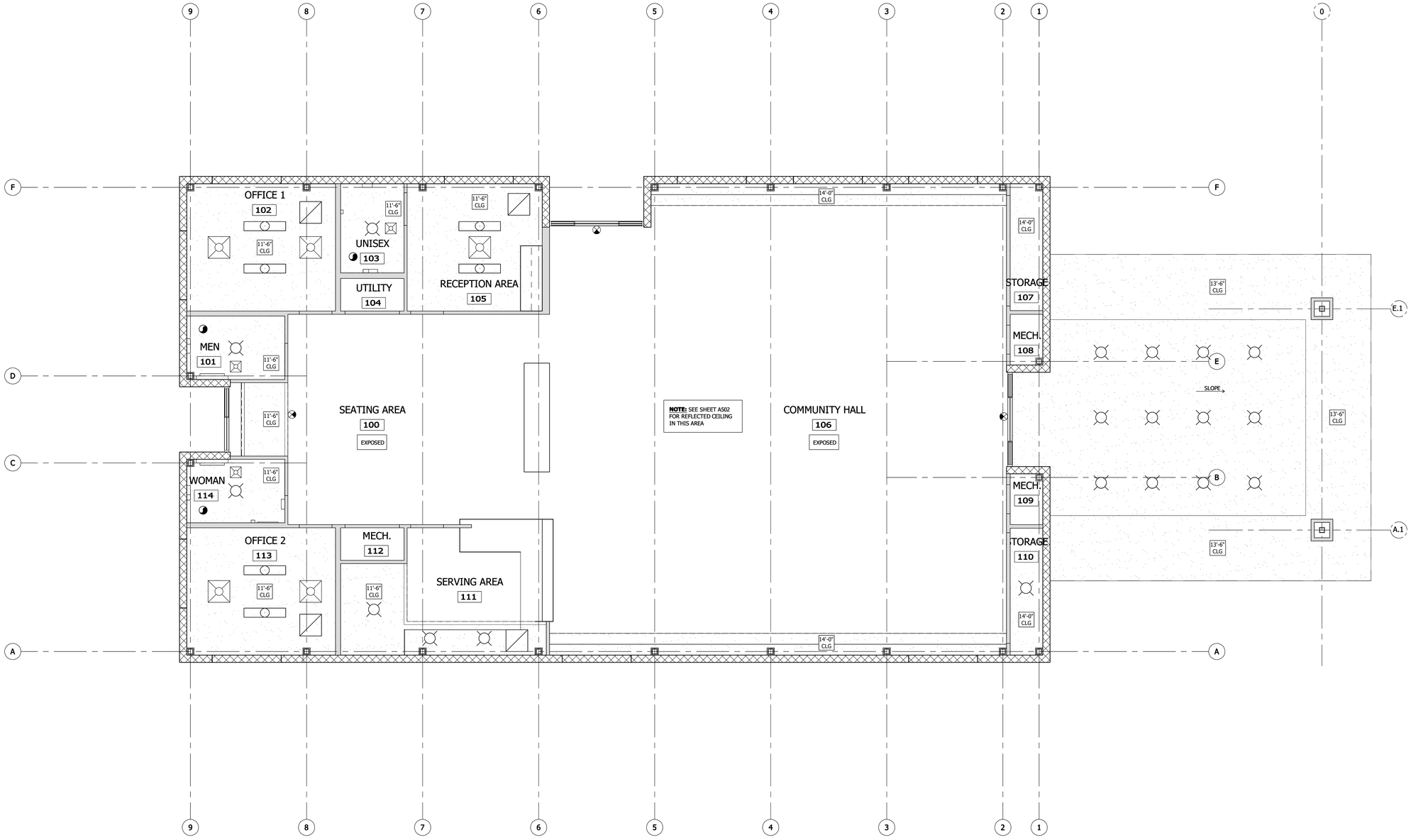

REFLECTED CEILING PLAN - FIRST FLOOR

SCALE: 3/16"=1'-0"

REFLECTED CEILING PLAN NOTES

1. ALL INTERIOR CEILING/SOFFIT FINISHES TO BE 1/2" GYPSUM WALL BOARD U.N.O.
2. REFER TO ELECTRICAL, MECHANICAL, AND PLUMBING DRAWINGS BY OTHERS FOR ADDITIONAL INFORMATION.
3. INSTALL ALL ELECTRICAL PER MANUFACTURER INSTALLATION INSTRUCTIONS AND IN ACCORDANCE WITH ALL APPLICABLE CODES.

LIGHTING TYPES

SYMBOL	DESCRIPTION
	WALL MOUNTED LIGHT FIXTURE
	CEILING MOUNTED LIGHT FIXTURE
	RGBW TAPELIGHT
	SURFACE MOUNTED 1X4 FLUORESCENT LIGHT FIXTURE
	TRACK LIGHT WITH 3 CANS
	MECHANICAL EXHAUST FAN
	A/C VENTS
	A/C RETURNS

CEILING TYPES

SYMBOL	DESCRIPTION
	DRYWALL CEILING
	OPEN TO ABOVE

GENERAL CEILING NOTES:

1. SYMBOLS SHOWN ARE GENERALIZATIONS FOR SPECIFIC TRADES, FOR ACTUAL CEILING FIXTURE SPEC & TYPE. REFER TO ELECTRICAL ENGINEERS DRAWINGS.
2. ALL RESTROOM CEILINGS TO BE 11'-6" A.F.F. UNLESS NOTED OTHERWISE.

NOTE: **REFER TO ELECTRICAL FOR LIGHT FIXTURES ON SHEET E301**

REVISION	
0	00/00/00

ARCHITECTURE + ENGINEERING
License No. 102538
License No. 26002939
1230 Oakley Seaver Drive, Suite 200 - Clermont, FL 34711
P: 888-850-FFAE (3323)
www.forefrontae.com
FOREFRONT
Service Beyond Design

SENIOR CENTER

22174 US HIGHWAY 331 N PAXTON FL 32567

REFLECTED CEILING PLAN - FIRST FLOOR PLAN

ANY DISCREPANCY OR ERROR IN DIMENSIONS OR NOTES SHALL BE BROUGHT TO THE ATTENTION OF THE ARCHITECT/ENGINEER & THE CONSTRUCTION FROM IS FOR COMMENCEMENT OF CONSTRUCTION.

JOB #: 21-17367
DATE: 05/24/24

A501

J:\Walton County\Jobs\Aging Facility\21-17367-05- Code Update\Dwgs\Sheets\Architectural\A501 REFLECTED CEILING PLAN - FIRST FLOOR PLAN ; Plot Date: Thursday, May 30, 2024,3:23:39 PM; Plotted By: patricam

© FOREFRONT ARCHITECTURE & ENGINEERING LLC 2014 THIS DOCUMENT AND/OR THE DESIGN CONCEPTS EXPRESSED HEREIN ARE THE PROPERTY OF FOREFRONT ARCHITECTURE & ENGINEERING LLC AND ALL RIGHTS OF OWNERSHIP, INCLUDING COPYRIGHT OF INTELLECTUAL PROPERTY, ARE RESERVED. ANY REPRODUCTIONS, COPYING, OR USE OF THIS DOCUMENT AND/OR THE DESIGN CONCEPT WITHOUT THE WRITTEN CONSENT OF FOREFRONT ARCHITECTURE & ENGINEERING LLC IS STRICTLY PROHIBITED AND PROTECTED BY UNITED STATES AND INTERNATIONAL LAW. IF PRINTED ON 11x17 SCALE IS HALF THE SIZE NOTED.

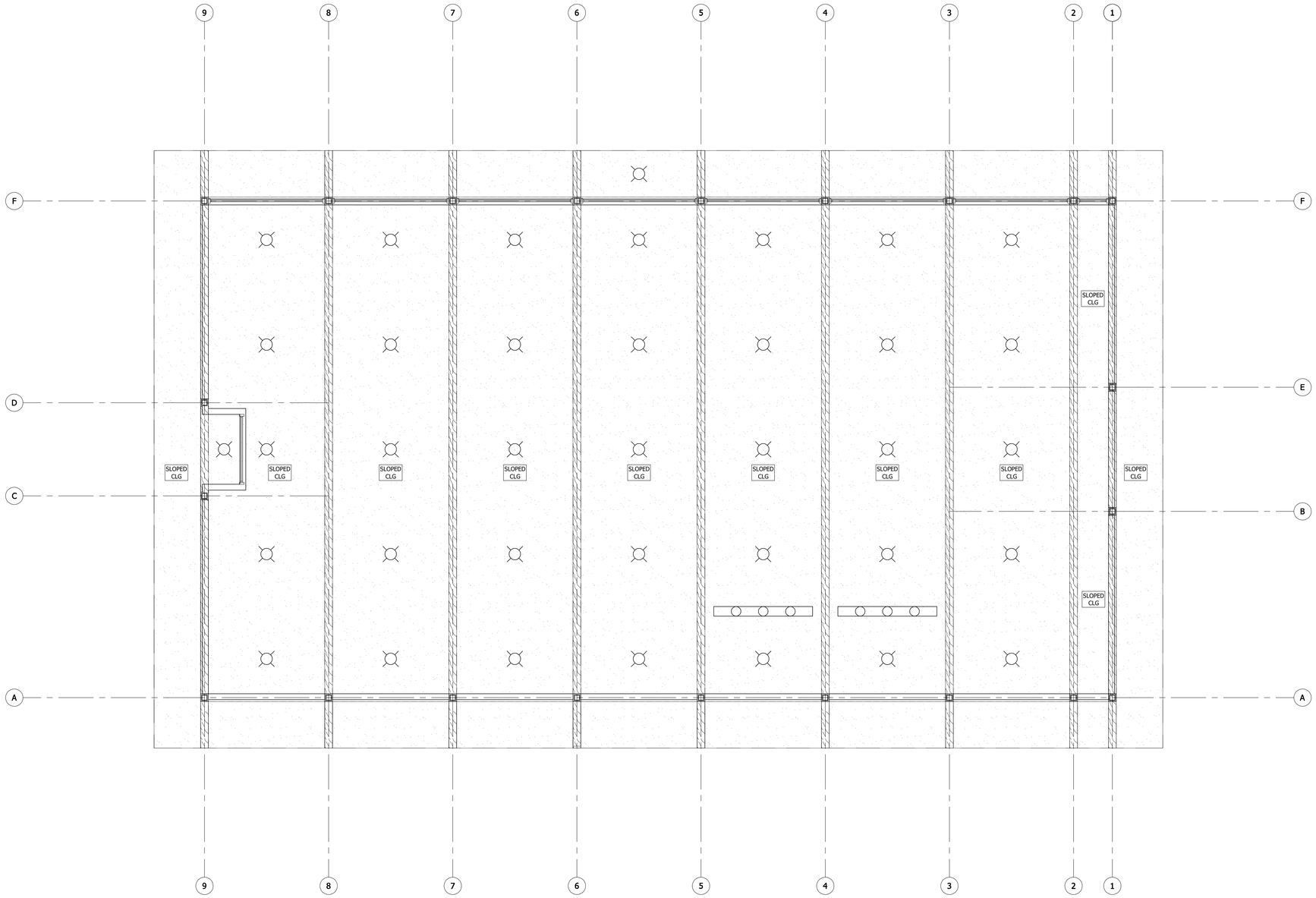

REFLECTED CEILING PLAN NOTES

1. ALL INTERIOR CEILING/SOFFIT FINISHES TO BE 1/2" GYPSUM WALL BOARD U.N.O.
2. REFER TO ELECTRICAL, MECHANICAL, AND PLUMBING DRAWINGS BY OTHERS FOR ADDITIONAL INFORMATION.
3. INSTALL ALL ELECTRICAL PER MANUFACTURER INSTALLATION INSTRUCTIONS AND IN ACCORDANCE WITH ALL APPLICABLE CODES.

LIGHTING TYPES

SYMBOL	DESCRIPTION
	WALL MOUNTED LIGHT FIXTURE
	CEILING MOUNTED LIGHT FIXTURE
	RGBW TAPELIGHT
	SURFACE MOUNTED 1X4 FLUORESCENT LIGHT FIXTURE
	TRACK LIGHT WITH 3 CANS
	MECHANICAL EXHAUST FAN
	A/C VENTS
	A/C RETURNS

CEILING TYPES

SYMBOL	DESCRIPTION
	DRYWALL CEILING
	OPEN TO ABOVE

GENERAL CEILING NOTES:

1. SYMBOLS SHOWN ARE GENERALIZATIONS FOR SPECIFIC TRADES, FOR ACTUAL CEILING FIXTURE SPEC & TYPE. REFER TO ELECTRICAL ENGINEERS DRAWINGS.
2. ALL RESTROOM CEILINGS TO BE 11'-6" A.F.F. UNLESS NOTED OTHERWISE.

REFLECTED CEILING PLAN - RAISED FLOOR

SCALE: 3/16"=1'-0"

REVISION
0 00/00/00

ARCHITECTURE + ENGINEERING
License No. 26002939 License No. 102538
1230 Oakley Seaver Drive, Suite 200 - Clermont, FL 34711
P: 888-850-FFAE (3323)
www.forefrontae.com
FOREFRONT
Service Beyond Design

SENIOR CENTER

22174 US HIGHWAY 331 N PAXTON FL 32567

REFLECTED CEILING PLAN - RAISED FLOOR

ANY DISCREPANCY OR ERROR IN DIMENSIONS OR NOTES SHALL BE BROUGHT TO THE ATTENTION OF THE DESIGN PROFESSIONAL FOR CLARIFICATION PRIOR TO COMMENCEMENT OF CONSTRUCTION.

JOB #: 21-17367
DATE: 05/24/24

A502

J:\Walton County\Jobs\Aging Facility\21-17367-05- Code Update\Dwgs\Sheets\Architectural\A502 REFLECTED CEILING PLAN - RAISED FLOOR , Plot Date: Thursday, May 30, 2024,3:23:57 PM, Plotted By: patriciam

© FOREFRONT ARCHITECTURE & ENGINEERING LLC 2014 THIS DOCUMENT AND/OR THE DESIGN CONCEPTS EXPRESSED HEREIN ARE THE PROPERTY OF FOREFRONT ARCHITECTURE & ENGINEERING LLC AND ALL RIGHTS OF OWNERSHIP, INCLUDING COPYRIGHT OF INTELLECTUAL PROPERTY, ARE RESERVED. ANY REPRODUCTIONS, COPYING, OR USE OF THIS DOCUMENT AND/OR THE DESIGN CONCEPT WITHOUT THE WRITTEN CONSENT OF FOREFRONT ARCHITECTURE & ENGINEERING LLC IS STRICTLY PROHIBITED AND PROTECTED BY UNITED STATES AND INTERNATIONAL LAW. IF PRINTED ON 11X17 SCALE IS HALF THE SIZE NOTED.

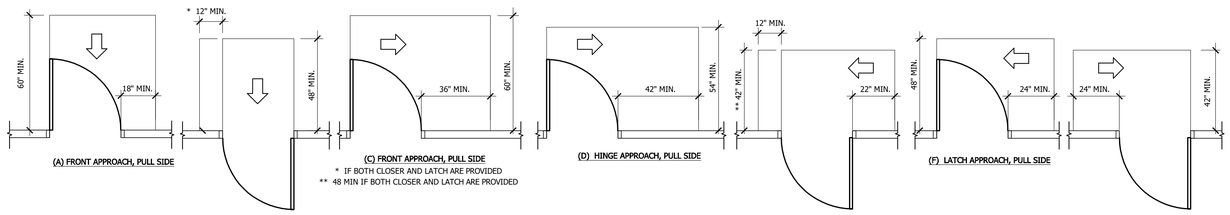

(A) FRONT APPROACH, PULL SIDE

(B) FRONT APPROACH, PUSH SIDE
* IF BOTH CLOSER AND LATCH ARE PROVIDED

(C) FRONT APPROACH, PULL SIDE
* IF BOTH CLOSER AND LATCH ARE PROVIDED
** 48 MIN IF BOTH CLOSER AND LATCH ARE PROVIDED

(D) HINGE APPROACH, PULL SIDE

(E) HINGE APPROACH, PUSH SIDE

(F) LATCH APPROACH, PULL SIDE

(G) LATCH APPROACH, PUSH SIDE
** 48 MIN IF CLOSER IS PROVIDED

404.2.4.4 FLOOR OR GROUND SURFACE. FLOOR OR GROUND SURFACE WITHIN REQUIRED MANEUVERING CLEARANCES SHALL COMPLY WITH 302. CHANGES IN LEVEL ARE NOT PERMITTED. EXCEPTIONS: 1. SLOPES NOT STEEPER THAN 1:48 SHALL BE PERMITTED. 2. CHANGES IN LEVEL AT THRESHOLDS COMPLYING WITH 404.2.5 SHALL BE PERMITTED.

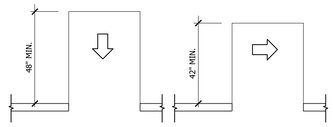

(A) FRONT APPROACH (B) SIDE APPROACH

FIG. 404.23.3.
MANEUVERING CLEARANCE AT OPENING

6 MANEUVERING CLEARANCE AT SWING DOORS
1/4"=1'-0"

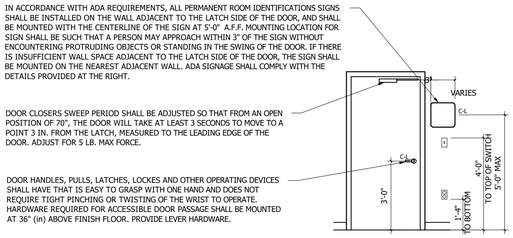

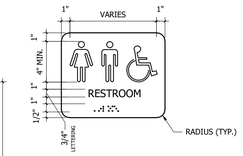

ALL PERMANENT ROOM IDENTIFICATION SIGNS SHALL COMPLY WITH THE AMERICANS WITH DISABILITIES ACT. SIGNS SHALL BE ADHERED TO SUPPORTING SURFACE BY ADHESIVE, SELECTED FOR HIGH STRENGTH AND DURABILITY OF BOND BETWEEN SIGN BACKING AND SUPPORTING SURFACE MATERIAL. SIGN BACKGROUND SHALL BE MINIMUM 1/8" THICK ACRYLIC PLATE. BACKGROUND COLOR SHALL BE SELECTED BY ARCHITECT FROM MANUFACTURER'S FULL RANGE OF STANDARD AND CUSTOM COLORS, AND SHALL PROVIDE AT LEAST 70% CONTRAST WITH WHITE FOREGROUND LETTERS. BACKGROUND FINISH SHALL BE NON-GLARE.

ACRYLIC LETTERING SHALL BE RAISED AT LEAST 1/32", AND MAY BE ACHIEVED THROUGH SURFACE APPLICATION, ETCHING OR INJECTION MOLDING. ALL LETTERS SHALL BE UPPER CASE. LETTER SIZE SHALL BE AS INDICATED, BUT NO CASE LESS THAN 5/8" HIGH OR GREATER THAN 2" HIGH. TYPE STYLE SHALL BE HELVICA MEDIUM, AND COLOR SHALL BE NON-GLARE WHITE. WHERE MORE THAN ONE ROW OF LETTERING IS REQUIRED, THE LEADING (BLAND SPACE) BETWEEN ROWS SHALL BE APPROXIMATELY 80% OF THE HEIGHT OF THE LETTERING. GRADE 2 BRAILLE REQUIRED. COLOR TO BE THE SAME AS SIGN BACKGROUND.

INTERNATIONAL PICTOGRAM SYMBOLS, WHERE REQUIRED, SHALL BE RAISED AT LEAST 1/32" (SIMILAR TO LETTERS), AND SHALL HAVE A MINIMUM 6" HIGH VERTICAL FIELD. THE EQUIVALENT VERBAL DESCRIPTION (TEXT) OF THE PICTOGRAM SHALL BE PLACED DIRECTLY BELOW THE PICTOGRAM, AND SHALL BE ACCOMPANIED BY GRADE 2 BRAILLE. PICTOGRAMS SHALL BE REQUIRED FOR THE FOLLOWING ROOM SIGNS: MEN (MALE ACCESSIBLE RESTROOM) WOMEN (FEMALE ACCESSIBLE RESTROOM)

3 MANEUVERING CLEARANCE AT OPENINGS
1/4"=1'-0"

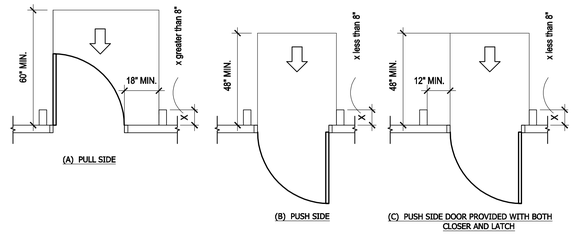

(A) PULL SIDE (B) PUSH SIDE (C) PUSH SIDE DOOR PROVIDED WITH BOTH CLOSER AND LATCH

FIG. 404.23.4 MANEUVERING CLEARANCE AT RECESSED DOORS

2 MANEUVERING CLEARANCE AT RECESSED DOORS
1/4"=1'-0"

5 MOUNTING HEIGHTS & IDENTIFICATION SIGN
1/4"=1'-0"

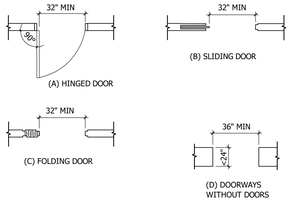

4 DOORWAY CLEAR WIDTH
3/8"=1'-0"

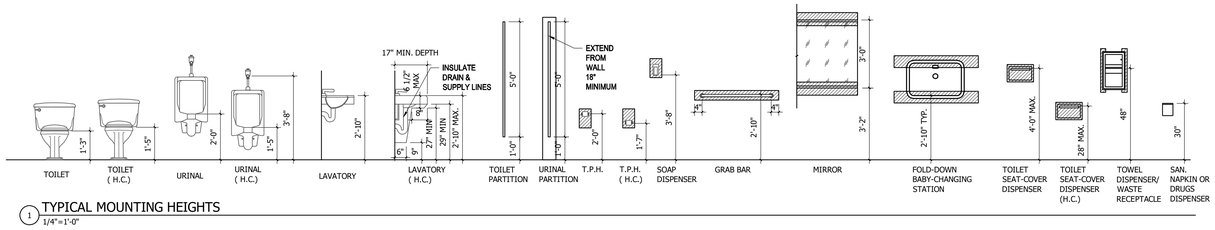

1 TYPICAL MOUNTING HEIGHTS
1/4"=1'-0"

ARCHITECTURE + ENGINEERING
License No. 102538
1230 Oakley Seaver Drive, Suite 200 - Clermont, FL 34711
P: 888-860-FFAE (3323)
www.forefrontae.com
FOREFRONT
Service Beyond Design
License No. 26002939

REVISION	
0	00/00/00

SEAL

SENIOR CENTER
22174 US HIGHWAY 331 N PAXTON FL 32567
ADA SIGNAGE AND DETAILS

ANY DISCREPANCY OR ERROR IN DIMENSIONS OR NOTES SHALL BE BROUGHT TO THE ATTENTION OF THE DESIGN PROFESSIONAL FOR CLARIFICATION PRIOR TO COMMENCEMENT OF CONSTRUCTION.

JOB #: 21-17367
DATE: 05/24/24
A600

J:\Walton County\Jobs\Aging Facility\21-17367-05- Code Update\Dwgs\Sheets\Architectural\A600 ADA SIGNAGE AND DETAILS ; Plot Date: Thursday, May 30, 2024_3:24:11 PM; Plotted By: patriciam

© FOREFRONT ARCHITECTURE & ENGINEERING LLC 2014 THIS DOCUMENT AND/OR THE DESIGN CONCEPTS EXPRESSED HEREIN ARE THE PROPERTY OF FOREFRONT ARCHITECTURE & ENGINEERING LLC AND ALL RIGHTS OF OWNERSHIP, INCLUDING COPYRIGHT OF INTELLECTUAL PROPERTY, ARE RESERVED. ANY REPRODUCTIONS, COPYING, OR USE OF THIS DOCUMENT AND/OR THE DESIGN CONCEPT WITHOUT THE WRITTEN CONSENT OF FOREFRONT ARCHITECTURE & ENGINEERING LLC IS STRICTLY PROHIBITED AND PROTECTED BY UNITED STATES AND INTERNATIONAL LAW. IF PRINTED ON 11X17 SCALE IS HALF THE SIZE NOTED.

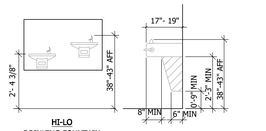

8 DRINKING FOUNTAIN CLEARANCES
1/4"=1'-0"

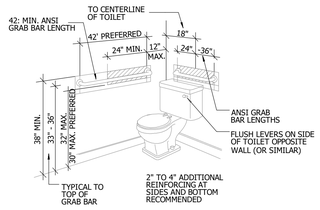

5 GRAB BAR REINFORCING @ TOILETS
1/2"=1'-0"

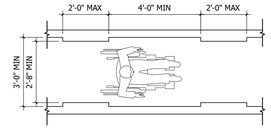

FIG. 403.5
CLEAR WIDTH OF AN ACCESSIBLE ROUTE

3 CLEAR SPACE OF AN ACCESSIBLE ROUTE
1/4"=1'-0"

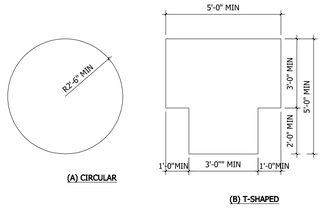

7 SIZE OF TURNING SPACE 1
1/4"=1'-0"

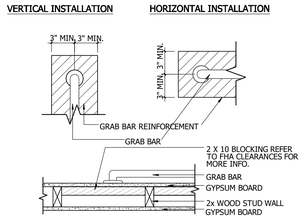

4 BLOCKING FOR GRAB BAR DETAIL
1 1/2"=1'-0"

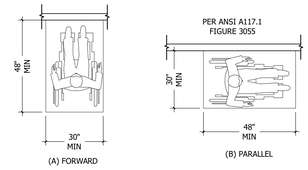

2 POSITION OF CLEAR FLOOR SPACE 1
1/4"=1'-0"

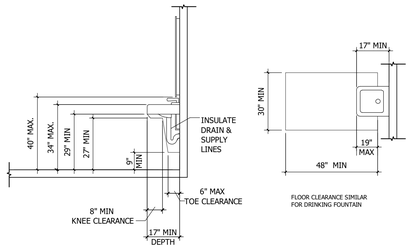

6 LAVATORY CLEARANCES
1/4"=1'-0"

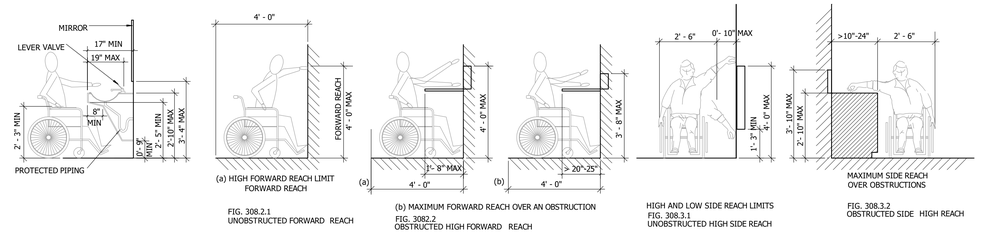

1 REACH ANGLES 1
1/4"=1'-0"

ARCHITECTURE + ENGINEERING
License No. 26002939 License No. 102538
1230 Oakley Seaver Drive, Suite 200 - Clermont, FL 34711
P: 888-850-FFAE (3323)
www.forefrontae.com
FOREFRONT
Service Beyond Design

REVISION	
0	00/00/00

SEAL

SENIOR CENTER
22174 US HIGHWAY 331 N PAXTON FL 32567
ADA DETAILS

ANY DISCREPANCY OR ERROR IN DIMENSIONS OR NOTES SHALL BE BROUGHT TO THE ATTENTION OF THE DESIGN PROFESSIONAL FOR CLARIFICATION PRIOR TO COMMENCEMENT OF CONSTRUCTION.

JOB #: 21-17367
DATE: 05/24/24

A601

© FOREFRONT ARCHITECTURE & ENGINEERING LLC 2014 THIS DOCUMENT AND/OR THE DESIGN CONCEPTS EXPRESSED HEREIN ARE THE PROPERTY OF FOREFRONT ARCHITECTURE & ENGINEERING LLC AND ALL RIGHTS OF OWNERSHIP, INCLUDING COPYRIGHT OF INTELLECTUAL PROPERTY, ARE RESERVED. ANY REPRODUCTIONS, COPYING, OR USE OF THIS DOCUMENT AND/OR THE DESIGN CONCEPT WITHOUT THE WRITTEN CONSENT OF FOREFRONT ARCHITECTURE & ENGINEERING LLC IS STRICTLY PROHIBITED AND PROTECTED BY UNITED STATES AND INTERNATIONAL LAW. IF PRINTED ON 11X17 SCALE IS HALF THE SIZE NOTED.

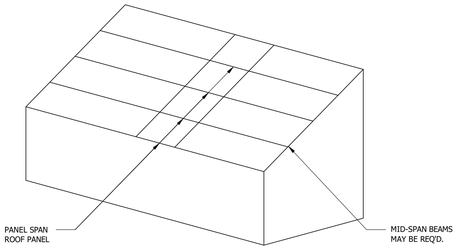

PANELS SUPPORTED BY THE RIDGE BEAM AND THE EAVE WALLS

SECTION:		SCALE:
4	RIDGE BEAM SYSTEM	1 1/2" = 1'-0"
		File Name:

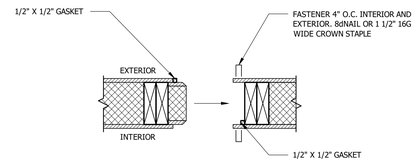

SECTION:		SCALE:
3	ROOF PANEL TO PANEL CONNECTION	1 1/2" = 1'-0"
		File Name:

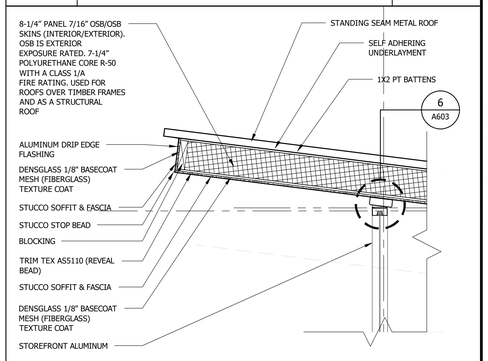

SECTION:		SCALE:
2	ROOF PANEL EAVE	
		File Name: SN

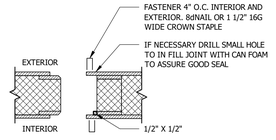

SECTION:		SCALE:
1	ROOF PANEL TO PANEL CONNECTION	1 1/2" = 1'-0"
		File Name:

REVISION
0 | 00/00/00

ARCHITECTURE + ENGINEERING
License No. 26002939 License No. 102538
1230 Oakley Seaver Drive, Suite 200 - Clermont, FL 34711
P: 888-850-FFAE (3323)
www.forefrontae.com
FOREFRONT
Service Beyond Design

SEAL

SENIOR CENTER

22174 US HIGHWAY 331 N PAXTON FL 32567

ARCHITECTURAL DETAILS

ANY DISCREPANCY OR ERROR IN DIMENSIONS OR NOTES SHALL BE BROUGHT TO THE ATTENTION OF THE ARCHITECT PRIOR TO CONSTRUCTION FROM IT FOR COMMENCEMENT OF CONSTRUCTION.

JOB #: 21-17367
DATE: 05/24/24

A602

© FOREFRONT ARCHITECTURE & ENGINEERING LLC 2014 THIS DOCUMENT AND/OR THE DESIGN CONCEPTS EXPRESSED HEREIN ARE THE PROPERTY OF FOREFRONT ARCHITECTURE & ENGINEERING LLC AND ALL RIGHTS OF OWNERSHIP, INCLUDING COPYRIGHT OF INTELLECTUAL PROPERTY, ARE RESERVED. ANY REPRODUCTIONS, COPYING, OR USE OF THIS DOCUMENT AND/OR THE DESIGN CONCEPT WITHOUT THE WRITTEN CONSENT OF FOREFRONT ARCHITECTURE & ENGINEERING LLC IS STRICTLY PROHIBITED AND PROTECTED BY UNITED STATES AND INTERNATIONAL LAW. IF PRINTED ON 11X17 SCALE IS HALF THE SIZE NOTED.

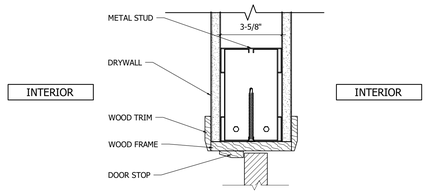

SECTION:		SCALE:
12	DOOR HEAD - STUD WALL	3" = 1'-0"
		File Name: NA

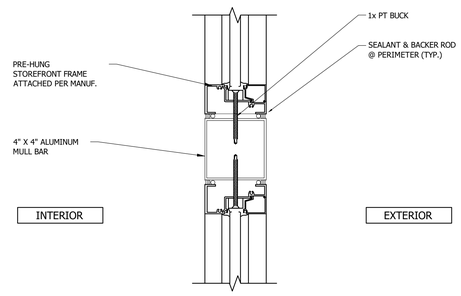

SECTION:		SCALE:
9	STOREFRONT HEAD - ALUMINUM MULL BAR	3" = 1'-0"
		File Name: NA

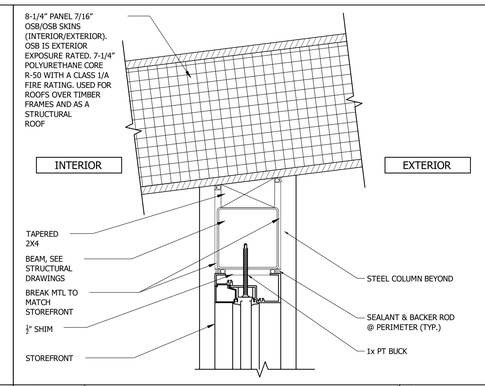

SECTION:		SCALE:
6	STOREFRONT HEAD - STL BEAM	3" = 1'-0"
		File Name: NA

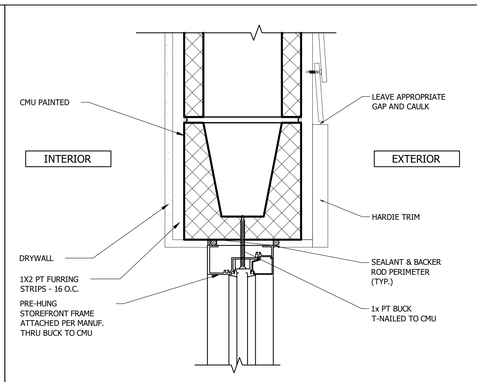

SECTION:		SCALE:
3	STOREFRONT HEAD - CMU WALL	3" = 1'-0"
		File Name: NA

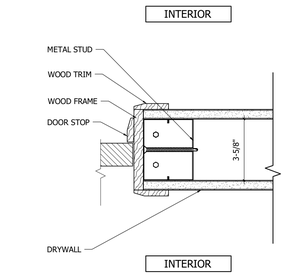

SECTION:		SCALE:
11	DOOR JAMB - STUD WALL	3" = 1'-0"
		File Name: NA

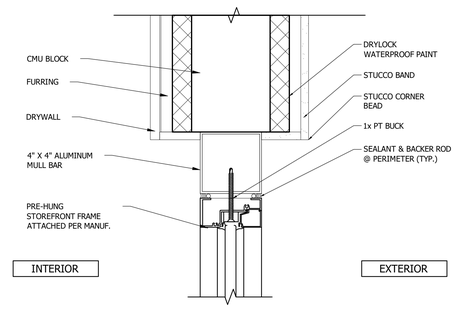

SECTION:		SCALE:
8	STOREFRONT SILL - ALUMINUM MULL BAR	3" = 1'-0"
		File Name: NA

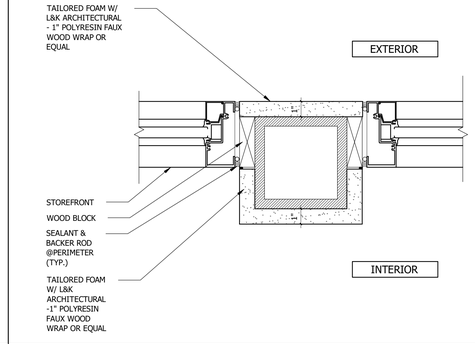

SECTION:		SCALE:
5	STOREFRONT JAMB - STL COLUMN	3" = 1'-0"
		File Name: NA

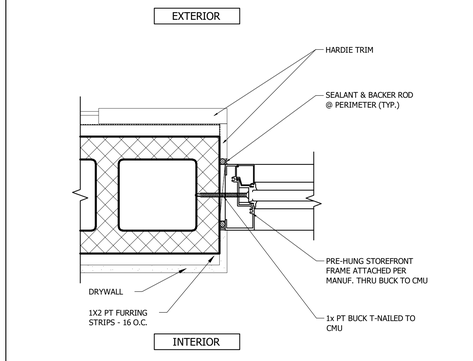

SECTION:		SCALE:
2	STOREFRONT JAMB - CMU WALL	3" = 1'-0"
		File Name: NA

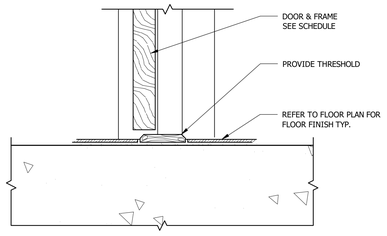

SECTION:		SCALE:
10	INTERIOR DOOR THRESHOLD	3"=1'-0"
		File Name: NA

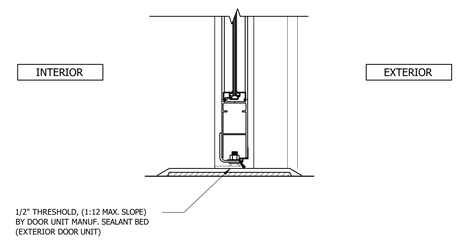

SECTION:		SCALE:
7	STOREFRONT THRESHOLD	3" = 1'-0"
		File Name: NA

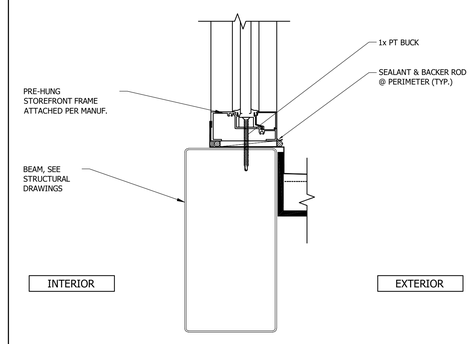

SECTION:		SCALE:
4	STOREFRONT SILL - STL BEAM	3" = 1'-0"
		File Name: NA

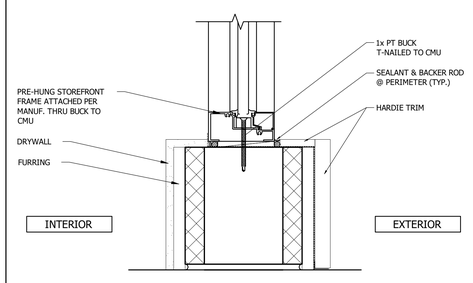

SECTION:		SCALE:
1	STOREFRONT SILL - CMU WALL	3" = 1'-0"
		File Name: NA

ARCHITECTURE + ENGINEERING
License No. 26002939
License No. 102538
1230 Oakley Seaver Drive, Suite 200 - Clermont, FL 34711
P: 888-850-FFAE (3323)
www.forefrontae.com
FOREFRONT
Service Beyond Design

REVISION	
0	00/00/00

SEAL

SENIOR CENTER
22174 US HIGHWAY 331 N PAXTON FL 32567
ARCHITECTURAL DETAILS

ANY DISCREPANCY OR ERROR IN DIMENSIONS OR NOTES SHALL BE BROUGHT TO THE ATTENTION OF THE ARCHITECT/ENGINEER FOR CLARIFICATION PRIOR TO THE COMMENCEMENT OF CONSTRUCTION.

JOB #: 21-17367
DATE: 05/24/24
A603

© FOREFRONT ARCHITECTURE & ENGINEERING LLC 2014 THIS DOCUMENT AND/OR THE DESIGN CONCEPTS EXPRESSED HEREIN ARE THE PROPERTY OF FOREFRONT ARCHITECTURE & ENGINEERING LLC AND ALL RIGHTS OF OWNERSHIP, INCLUDING COPYRIGHT OF INTELLECTUAL PROPERTY, ARE RESERVED. ANY REPRODUCTIONS, COPYING, OR USE OF THIS DOCUMENT AND/OR THE DESIGN CONCEPT WITHOUT THE WRITTEN CONSENT OF FOREFRONT ARCHITECTURE & ENGINEERING LLC IS STRICTLY PROHIBITED AND PROTECTED BY UNITED STATES AND INTERNATIONAL LAW. IF PRINTED ON 11X17 SCALE IS HALF THE SIZE NOTED.

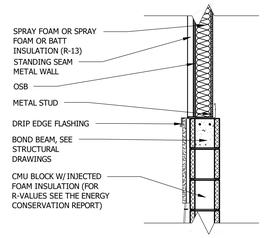

SECTION: 8 — EXTERIOR CMU WALL WITH FRAME WALL ON TOP — SCALE: — File Name: SN

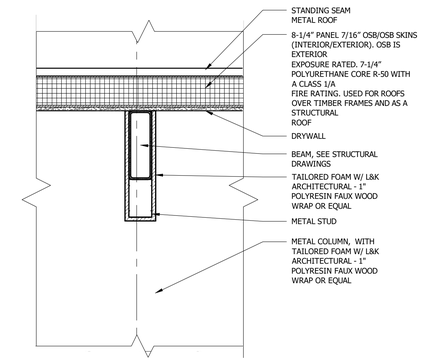

SECTION: 4 — WRAPPED BEAM - ROOF — SCALE: — File Name: SN

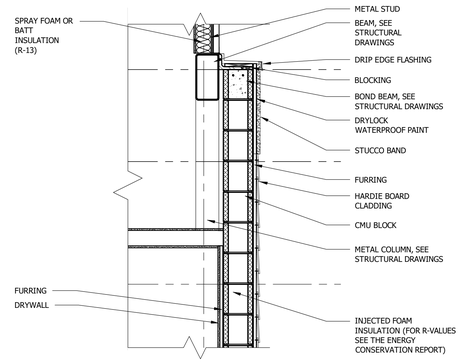

SECTION: 7 — CMU -BEAM - CEILING — SCALE: — File Name: SN

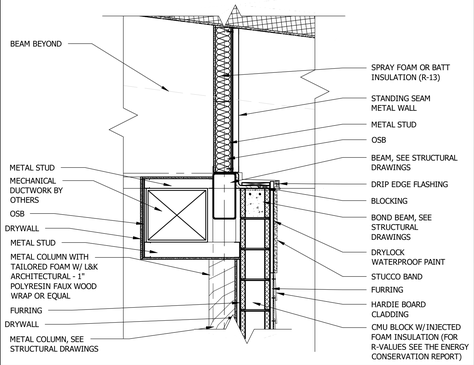

SECTION: 3 — EXTERIOR CMU WALL AND BEAM WITH FRAME WALL ON TOP — SCALE: — File Name: SN

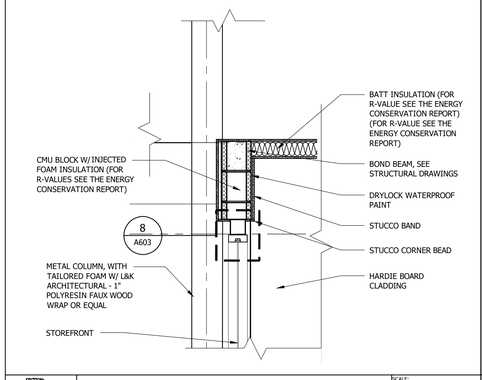

SECTION: 6 — EXTERIOR CMU WALL AND BEAM CONNECTION AT PORTE COCHERE — SCALE: — File Name: XXX

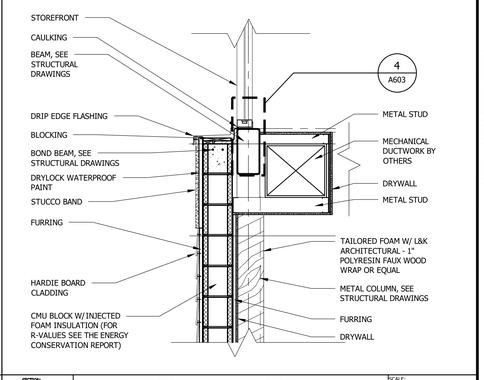

SECTION: 2 — EXTERIOR CMU WALL AND BEAM WITH STOREFRONT — SCALE: — File Name: SN

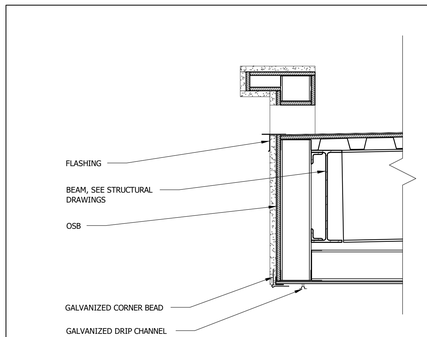

SECTION: 9 — PORT COCHERE ROOF — SCALE: 1 1/2" = 1'-0" — File Name:

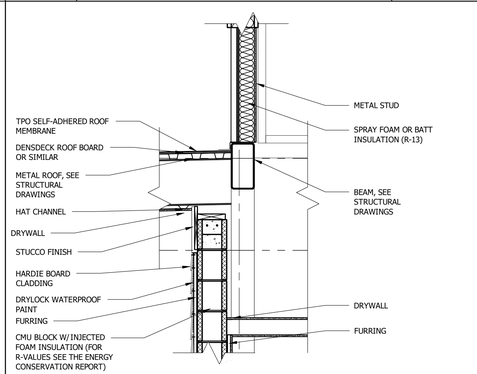

SECTION: 5 — EXTERIOR CMU WALL AND BEAM CONNECTION AT PORTE COCHERE — SCALE: — File Name: SN

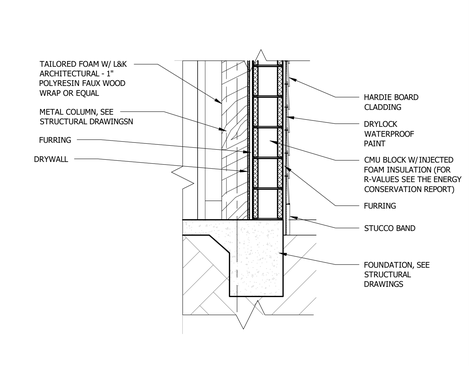

SECTION: 1 — MONO FOOTING - CMU WITH CLADDING — SCALE: — File Name: SN

REVISION
0 | 00/00/00

ARCHITECTURE + ENGINEERING
License No. 102538
1230 Oakley Seaver Drive, Suite 200 - Clermont, FL 34711
License No. 26002939
P: 888-850-FFAE (3323)
www.forefrontae.com
FOREFRONT
Service Beyond Design

SENIOR CENTER

22174 US HIGHWAY 331 N PAXTON FL 32567

ARCHITECTURAL DETAILS

ANY DISCREPANCY OR ERROR IN DIMENSIONS OR NOTES SHALL BE BROUGHT TO THE ATTENTION OF THE ARCHITECT PRIOR TO CLARIFICATION PRIOR TO COMMENCEMENT OF CONSTRUCTION.

JOB #: 21-17367
DATE: 05/24/24

A604

J:\Walton County\Jobs\Aging Facility\21-17367-05- Code Update\Dwgs\Sheets\Architectural\A604 ARCHITECTURAL DETAILS ; Plot Date: Thursday, May 30, 2024,3:25:22 PM; Plotted By: patricam

© FOREFRONT ARCHITECTURE & ENGINEERING LLC 2014 THIS DOCUMENT AND/OR THE DESIGN CONCEPTS EXPRESSED HEREIN ARE THE PROPERTY OF FOREFRONT ARCHITECTURE & ENGINEERING LLC AND ALL RIGHTS OF OWNERSHIP, INCLUDING COPYRIGHT OF INTELLECTUAL PROPERTY, ARE RESERVED. ANY REPRODUCTIONS, COPYING, OR USE OF THIS DOCUMENT AND/OR THE DESIGN CONCEPT WITHOUT THE WRITTEN CONSENT OF FOREFRONT ARCHITECTURE & ENGINEERING LLC IS STRICTLY PROHIBITED AND PROTECTED BY UNITED STATES AND INTERNATIONAL LAW. IF PRINTED ON 11X17 SCALE IS HALF THE SIZE NOTED.

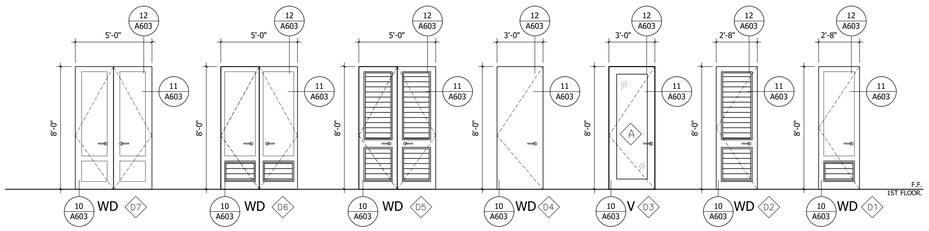

DOOR ELEVATIONS

SCALE: 1/4"=1'-0"



FRAME ELEVATIONS

SCALE: 1/4"=1'-0"

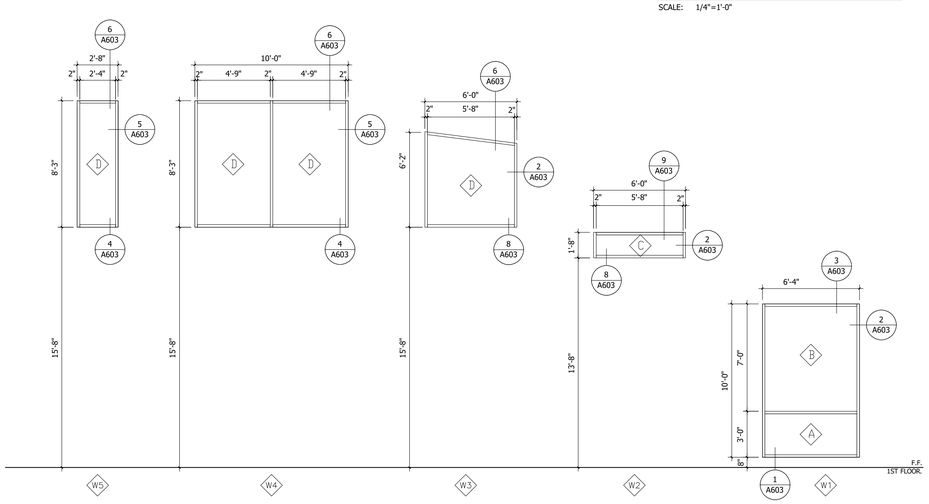

WINDOW ELEVATIONS

SCALE: 1/4"=1'-0"

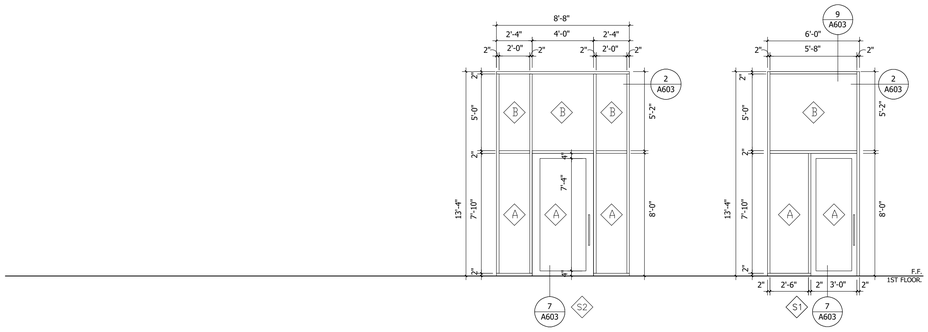

STOREFRONT ELEVATIONS

SCALE: 1/4"=1'-0"

DOOR AND FRAME SCHEDULE

MARK	Space - SpaceObjects - Name	Type	DOOR SIZE WD	SIZE HGT	SIZE THK	DOOR MATL	LOUVER WD	LOUVER HGT	GLAZING	FRAME MATL	FRAME EL	DETAIL HEAD	DETAIL JAMB	DETAIL SILL	FIRE RATING LABEL	HARDWARE SET NO	HARDWARE KEYSIDE RM NO	NOTES
1	SEATING AREA	S1-S2	3'-0"	8'-0"	1 3/4"	ALUM.	0"	0"	--	ALUM.	--	3/A603	2/A603	1/A603	--	01	--	Storefront
2	MEN	D1	3'-0"	8'-0"	1 3/4"	WD.	2'-0"	1'-4"	--	WOOD	F1	12/A603	11/A603	10/A603	--	03	--	--
3	OFFICE 1	D4	3'-0"	8'-0"	1 3/4"	WD.	0"	0"	--	WOOD	F1	12/A603	11/A603	10/A603	--	02	--	--
4	UTILITY	D6	5'-0"	8'-0"	1 3/4"	WD.	2'-0"	1'-4"	--	WOOD	F2	12/A603	11/A603	10/A603	--	02	--	--
5	UNISEX	D1	3'-0"	8'-0"	1 3/4"	WD.	2'-0"	1'-4"	--	WOOD	F1	12/A603	11/A603	10/A603	--	03	--	--
6	RECEPTION AREA	D4	3'-0"	8'-0"	1 3/4"	WD.	0"	0"	--	WOOD	F1	12/A603	11/A603	10/A603	--	02	--	--
7	COMMUNITY HALL	S1-S2	4'-0"	8'-0"	1 3/4"	ALUM.	0"	0"	--	ALUM.	--	3/A603	2/A603	1/A603	--	01	--	Storefront
8	COMMUNITY HALL	D7	5'-0"	8'-0"	1 3/8"	WD.	0"	0"	--	WOOD	F3	6/A603	5/A603	4/A603	--	02	--	--
9	COMMUNITY HALL	D7	5'-0"	8'-0"	1 3/8"	WD.	0"	0"	--	WOOD	F3	6/A603	5/A603	4/A603	--	02	--	--
10	MECH.	D2	2'-8"	8'-0"	1 3/4"	WD.	2'-0"	7'-1"	--	WOOD	F1	6/A603	5/A603	4/A603	--	02	--	--
11	COMMUNITY HALL	S1-S2	4'-0"	8'-0"	1 3/4"	ALUM.	0"	0"	--	ALUM.	--	3/A603	2/A603	1/A603	--	01	--	Storefront
12	MECH.	D2	2'-8"	8'-0"	1 3/4"	WD.	2'-0"	7'-1"	--	WOOD	F1	6/A603	5/A603	4/A603	--	02	--	--
13	COMMUNITY HALL	D7	5'-0"	8'-0"	1 3/8"	WD.	0"	0"	--	WOOD	F3	6/A603	5/A603	4/A603	--	02	--	--
14	COMMUNITY HALL	D7	5'-0"	8'-0"	1 3/8"	WD.	0"	0"	--	WOOD	F3	6/A603	5/A603	4/A603	--	02	--	--
15	SERVING AREA	D3	3'-0"	8'-0"	1 3/4"	WD.	0"	0"	TEMP.	WOOD	F1	6/A603	5/A603	4/A603	--	02	--	--
16	MECH.	D5	5'-0"	8'-0"	1 3/4"	WD.	2'-0"	7'-1"	--	WOOD	F2	6/A603	5/A603	4/A603	--	02	--	--
17	OFFICE 2	D4	3'-0"	8'-0"	1 3/4"	WD.	0"	0"	--	WOOD	F1	12/A603	11/A603	10/A603	--	02	--	--
18	WOMAN	D1	3'-0"	8'-0"	1 3/4"	WD.	2'-0"	1'-4"	--	WOOD	F1	12/A603	11/A603	10/A603	--	03	--	--

ABBREVIATIONS

BF	=	BI-FOLD
D	=	DUTCH
F	=	FLUSH
FG	=	FULL GLASS
FGLX	=	FIXED LEXAN PANELS
G	=	1/2 GLASS
GL	=	1/2 GLASS W/ LOUVER
HC	=	HOLLOW CORE WOOD
HM	=	HOLLOW METAL
L	=	LOUVERED
N	=	NARROW LITE
FN	=	FULL NARROW LITE
OC	=	OVERHEAD COILING
P	=	PAINTED
S	=	STAINED
SC	=	SOLID CORE WOOD
U	=	UNFINISHED
V	=	VIEW GLASS
WD	=	WOOD

WINDOW SCHEDULE - FLOOR PLAN

MARK	NAME	SIZE Width	SIZE HEIGHT	HEAD HGT	SILL HGT	Glazing	DETAIL Head Detail	DETAIL Jamb Detail	DETAIL Sill Detail	Type	Material	NOTES
101	SEATING AREA	6'-0"	1'-8"	15'-4"	13'-8"	INSULATING	9/A603	8/A603	7/A603	W2	ALUM	
102	SEATING AREA	6'-0"	6'-2"	21'-10"	15'-8"	INSULATING	9/A603	8/A603	7/A603	W3	ALUM	
103	OFFICE 1	6'-4"	10'-0"	10'-8"	8"	INSULATING	9/A603	8/A603	7/A603	W1	ALUM	
104	OFFICE 1	6'-4"	10'-0"	10'-8"	8"	INSULATING	9/A603	8/A603	7/A603	W1	ALUM	
105	RECEPTION AREA	6'-4"	10'-0"	10'-8"	8"	INSULATING	9/A603	8/A603	7/A603	W1	ALUM	
106	COMMUNITY HALL	6'-4"	10'-0"	10'-8"	8"	INSULATING	9/A603	8/A603	7/A603	W1	ALUM	
107	COMMUNITY HALL	6'-4"	10'-0"	10'-8"	8"	INSULATING	9/A603	8/A603	7/A603	W1	ALUM	
108	COMMUNITY HALL	6'-4"	10'-0"	10'-8"	8"	INSULATING	9/A603	8/A603	7/A603	W1	ALUM	
109	COMMUNITY HALL	6'-4"	10'-0"	10'-8"	8"	INSULATING	9/A603	8/A603	7/A603	W1	ALUM	
110	COMMUNITY HALL	6'-4"	10'-0"	10'-8"	8"	INSULATING	9/A603	8/A603	7/A603	W1	ALUM	
111	OFFICE 2	6'-4"	10'-0"	10'-8"	8"	INSULATING	9/A603	8/A603	7/A603	W1	ALUM	
112	OFFICE 2	6'-4"	10'-0"	10'-8"	8"	INSULATING	9/A603	8/A603	7/A603	W1	ALUM	

WINDOW SCHEDULE - RAISED FLOOR PLAN

MARK	SIZE Width	SIZE HEIGHT	Head Height	Sill Height	Glazing	DETAIL Head Detail	DETAIL Jamb Detail	DETAIL Sill Detail	Type	Material	NOTES
201	10'-0"	8'-3"	23'-11"	15'-8"	INSULATING	--	--	--	W4	--	
202	10'-0"	8'-3"	23'-11"	15'-8"	INSULATING	--	--	--	W4	--	
203	10'-0"	8'-3"	23'-11"	15'-8"	INSULATING	--	--	--	W4	--	
204	10'-0"	8'-3"	23'-11"	15'-8"	INSULATING	--	--	--	W4	--	
205	10'-0"	8'-3"	23'-11"	15'-8"	INSULATING	--	--	--	W4	--	
206	10'-0"	8'-3"	23'-11"	15'-8"	INSULATING	--	--	--	W4	--	
207	10'-0"	8'-3"	23'-11"	15'-8"	INSULATING	--	--	--	W5	--	
208	2'-8"	8'-3"	23'-11"	15'-8"	INSULATING	--	--	--	W5	--	

STOREFRONT SCHEDULE

MARK	NAME	SIZE Width	SIZE HEIGHT	HEAD HGT	SILL HGT	Glazing	DETAIL Head Detail	DETAIL Jamb Detail	DETAIL Sill Detail	Type	Material	NOTES
1	SEATING AREA	6'-0"	13'-4"	13'-4"	0"	INSULATING	3/A603	2/A603	1/A603	S1	ALUM	
2	COMMUNITY HALL	8'-8"	13'-4"	13'-4"	0"	INSULATING	3/A603	2/A603	1/A603	S2	ALUM	
3	COMMUNITY HALL	8'-8"	13'-4"	13'-4"	0"	INSULATING	3/A603	2/A603	1/A603	S2	ALUM	

GLAZING SCHEDULE

	GLAZING THICKNESS	INSULATED	TEMPERED	LAMINATED	DESCRIPTION	SURFACE TREATMENT ONE	TWO	THREE	FOUR
A	1"	YES	YES	NO	BRONZE IG	--	VITRO SOLAR BRONZE	--	--
B	1"	YES	NO	NO	BRONZE IG	--	VITRO SOLAR BRONZE	--	--
C	1"	YES	NO	NO	BRONZE IG	--	VITRO SOLAR BRONZE	--	--
D	1"	YES	NO	NO	BRONZE IG	--	VITRO SOLAR BRONZE	--	--

NOTE:
1. SEE ENERGY ANALYSIS REPORT FOR MINIMUM FENESTRATION ENERGY STANDARDS.
2. IF THERE IS A CONFLICT BETWEEN ENERGY VALUES, THE ENERGY CALCULATIONS TAKE PRECEDENT.

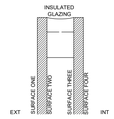

HARDWARE SCHEDULE

HARDWARE SET #1 (STOREFRONT)

- (1 PACK) BUTT HINGES
- CLOSER - STAINLESS STEEL FINISH
- PANIC BAR WITH EXTERIOR CYLINDER - INSTALLED 42" A.F.F. BRAND HARNEY HARDWARE -MODEL PE550036PP
- (1) ALUMINUM THRESHOLD
- (1) BOTTOM SWEEP
- (1) LATCH GUARD
- (1) SET FULL WEATHER STRIP
- (1) CYLINDER GRADE 1 DEADBOLT, SATIN CHROME FINISH BRAND SCHLAGE -MODELB60826
- (1) DOOR PULL SET, SATIN CHROME FINISH BRAND HAGER-12" CENTER TO CENTER 3/4" ROUND OFFSET -MODEL 11L28

HARDWARE SET #2 (SINGLE DOOR)

- (1 PACK) BUTT HINGES- HARNEY HARDWARE - MODEL HHFBB191NRP32D
- (1) LEVER TYPE SINGLE CYLINDER KEYED - BRAND SCHLAGE -MODEL J54MAR626

HARDWARE SET #3 (RESTROOM)

- (1 PACK) BUTT HINGES- HARNEY HARDWARE - MODEL HHFBB191NRP32D
- (1) LEVER TYPE PRIVACY DOOR - BRAND SCHLAGE -MODEL J40MAR626

GENERAL DOOR NOTES:

2. GENERAL CONTRACTOR TO SUBMIT TYPE-WRITTEN SHOP DRAWINGS AND PRODUCT LITERATURE FOR ALL DOORS AND HARDWARE SPECIFIED (PREPARED BY A LICENSED AND CERTIFIED CONSULTANT)
3. THE SUBCONTRACTORS WILL INSTALL ALL DOORS, FRAMES, HARDWARE, LOCK SETS, AND ENTRANCE DOORS.
4. G.C. TO VERIFY OPENING DIMENSIONS IN FIELD PRIOR TO FABRICATION AND INSTALLATION.
5. SEE STOREFRONT ELEVATIONS AND NOTICES OF ACCEPTANCE FOR TEMPERED GLASS LOCATIONS.
6. ALL STOREFRONT WINDOWS AND DOORS ARE REQUIRED TO BE TESTED IN ACCORDANCE W/ ANSI/AMMA/NWWDA 101/1S2 STANDARDS AND BEAR AN AMMA OR WDMA LABEL IDENTIFYING THE MANUFACTURER, PERFORMANCE CHARACTERISTICS AND APPROVED PRODUCT TESTING ENTITY.
7. ALL STOREFRONT WINDOWS AND DOORS SHALL BE ANCHORED PER NOTICE OF ACCEPTANCE AND PUBLISHED MANUFACTURERS RECOMMENDATIONS TO ACHIEVE THE DESIGN PRESSURE SPECIFIED.
8. ALL STOREFRONT WINDOWS AND DOORS SHALL BE ANCHORED AS PER APPLICABLE CODE - ANY STOREFRONT WINDOWS OR DOORS WITH A BUCK THICKNESS LESS THAN 1-1/2" SHALL BE ANCHORED THROUGH THE JAMB INTO THE ADJACENT STRUCTURAL SUBSTRATE.
9. STOREFRONT MULLIONS AND ADJACENT DOOR ASSEMBLIES ARE REQUIRED TO BE TESTED OR ENGINEERED TO TRANSFER MIN 1.5 TIMES THE DESIGNED LOADS TO THE ROUGH OPENING SUBSTRATE (OR AS PER CODE.
10. PROVIDE INFORMATION SIGN ON INTERIOR PUSH SIDE OF EXIT DOORS @ 52"H IN 1" HIGH RED VINYL LETTERS TO READ " THIS EXIT TO REMAIN UNLOCKED AT ALL TIMES THE BUILDING IS OCCUPIED.

HARDWARE NOTES:

1. ADJUST ALL CLOSERS TO A 5 LB. MAX. OPENING FORCE
2. ALL LOCK AND PASSAGE SETS TO BE SCHLAGE GRADE OR BETTER - SUBMIT OTHERS FOR APPROVAL - ALL LOCKS SHALL BE REKEYABLE
3. DOOR EGRESS/PANIC SYSTEMS MUST BE IN COMPLIANCE WITH SPECIAL EGRESS CONTROL DEVICES LISTED IN LOCAL CODES
4. SUBMIT DETAILED HARDWARE SCHEDULE FOR ARCHITECT AND/OR OWNER REVIEW PRIOR PURCHASE AND INSTALLATION
8. ALL DOORS AND HARDWARE TO COMPLY WITH ADA AND CODE OF FEDERAL REGULATION, UTILIZING A LEVER LATCH OR LOCKSET
9. ALL DOORS AND HARDWARE SHALL COMPLY WITH N.F.P.A. 101-5-2.1.5

REVISION
0 00/00/00

ARCHITECTURE + ENGINEERING
License No. 102538
License No. 26002939
1230 Oakley Seaver Drive, Suite 200 - Clermont, FL 34711
P: 888-860-FFAE (3323)
www.forefrontae.com
FOREFRONT
Service Beyond Design

SEAL

SENIOR CENTER
22174 US HIGHWAY 331 N PAXTON FL 32567
DOOR AND WINDOW SCHEDULES AND ELEVATIONS

ANY DISCREPANCY OR ERROR IN DIMENSIONS OR NOTES SHALL BE REPORTED IMMEDIATELY TO THE DESIGN PROFESSIONAL FOR CLARIFICATION PRIOR TO COMMENCEMENT OF CONSTRUCTION.

JOB #: 21-17367
DATE: 05/24/24

A701

J:\Walton County\Jobs\Aging Facility\21-17367-05- Code Update\Dwgs\Sheets\Architectural\A701 DOOR AND WINDOW SCHEDULES AND ELEVATIONS ; Plot Date: Thursday, May 30, 2024,3:25:49 PM; Plotted By: patriciam

© FOREFRONT ARCHITECTURE & ENGINEERING LLC 2014 THIS DOCUMENT AND/OR THE DESIGN CONCEPTS EXPRESSED HEREIN ARE THE PROPERTY OF FOREFRONT ARCHITECTURE & ENGINEERING LLC AND ALL RIGHTS OF OWNERSHIP, INCLUDING COPYRIGHT OF INTELLECTUAL PROPERTY, ARE RESERVED. ANY REPRODUCTIONS, COPYING, OR USE OF THIS DOCUMENT AND/OR THE DESIGN CONCEPT WITHOUT THE WRITTEN CONSENT OF FOREFRONT ARCHITECTURE & ENGINEERING LLC IS STRICTLY PROHIBITED AND PROTECTED BY UNITED STATES AND INTERNATIONAL LAW. IF PRINTED ON 11X17 SCALE IS HALF THE SIZE NOTED.



FINISHES FLOOR PLAN - FIRST FLOOR PLAN

SCALE: 3/16"=1'-0"

ROOM FINISH SCHEDULE

NUMBER	ROOM NAME	FLOORS		WALL MATERIAL				CEILINGS		NOTES
		AREA	MAT.	N	S	E	W	HGT.	MATL	
100	SEATING AREA	495 SF	FF1	BF1/WF1/PC1	BF1/WF1/PC1	BF1/WF1/PC1	BF1/WF1/PC1	21'-6"	CF1/PC1	--
106	COMMUNITY HALL	1783 SF	FF1	BF1/WF1/PC1	BF1/WF1/PC1	BF1/WF1/PC1	BF1/WF1/PC1	21'-6"	CF1/PC1	--
111	SERVING AREA	201 SF	FF1	BF1/WF1/PC1	BF1/WF1/PC1	BF1/WF1/PC1	BF1/WF1/PC1	19'-5"	CF1/PC1	--
107	STORAGE	38 SF	FF1	BF1/WF1/PC1	BF1/WF1/PC1	BF1/WF1/PC1	BF1/WF1/PC1	10'-8"	CF1/CP1	--
108	MECH.	11 SF	FF2	BF1/WF1/PC1	BF1/WF1/PC1	BF1/WF1/PC1	BF1/WF1/PC1	11'-0"	--	--
109	MECH.	11 SF	FF2	BF1/WF1/PC1	BF1/WF1/PC1	BF1/WF1/PC1	BF1/WF1/PC1	11'-0"	--	--
110	STORAGE	38 SF	FF1	BF1/WF1/PC1	BF1/WF1/PC1	BF1/WF1/PC1	BF1/WF1/PC1	10'-8"	CF1/CP1	--
103	UNISEX	48 SF	FF1	WF2/PC1	WF2/PC1	WF2/PC1	WF2/PC1	10'-8"	CF1/PC1	--
112	MECH.	18 SF	FF2	BF1/WF1/PC1	BF1/WF1/PC1	BF1/WF1/PC1	BF1/WF1/PC1	11'-0"	--	--
113	OFFICE 2	160 SF	FF1	BF1/WF1/PC1	BF1/WF1/PC1	BF1/WF1/PC1	BF1/WF1/PC1	10'-8"	CF1/PC1	--
102	OFFICE 1	160 SF	FF1	BF1/WF1/PC1	BF1/WF1/PC1	BF1/WF1/PC1	BF1/WF1/PC1	10'-8"	CF1/PC1	--
104	UTILITY	17 SF	FF1	WF2/PC1	WF2/PC1	WF2/PC1	WF2/PC1	10'-8"	CF1/CP1	--
105	RECEPTION AREA	145 SF	FF1	BF1/WF1/PC1	BF1/WF1/PC1	BF1/WF1/PC1	BF1/WF1/PC1	10'-8"	CF1/PC1	--
114	WOMAN	53 SF	FF1	WF2/PC1	WF2/PC1	WF2/PC1	WF2/PC1	10'-8"	CF1/PC1	--
101	MEN	53 SF	FF1	WF2/PC1	WF2/PC1	WF2/PC1	WF2/PC1	10'-8"	CF1/PC1	--

FINISHES LEGEND

BASEBOARD FINISH

BF1 BASEBOARD - REAL WOODS - RWBA - 03 (9/16" X 5-1/4") - OR EQUAL

FLOOR FINISH

FF1 24"x24" DALTILE -SUPERIOR SLIP RESISTANCE FLOOR TILE.
MODEL: SCRIPER -MENTOR SQUARE-COLOR: AR62-MATTE - OR EQUAL

FF2 SEALED CONCRETE

PAINT COLOR

PC1 SHERWIN WILLIAMS. SW7001. COLOR MARSHMALLOW.
LOCATION NUMBER: 267-C1

WALL FINISH

WF1 PAINTED GYPSUM

WF2 12"X12" DALTILE ADVANTAGE -OFF WHITE-COLOR
AR30-FINISH: MATTE - OR EQUAL .

CEILING FINISH

CF1 PAINTED GYPSUM

ARCHITECTURE + ENGINEERING
License No. 102538
1230 Oakley Seaver Drive, Suite 200 - Clermont, FL 34711
P: 888-850-FFAE (3323)
www.forefrontae.com
License No. 26002939
FOREFRONT
Service Beyond Design

REVISION
0 | 00/00/00

SENIOR CENTER
22174 US HIGHWAY 331 N PAXTON FL 32567
FINISHES FLOOR PLAN

ANY DISCREPANCY OR ERROR IN DIMENSIONS OR NOTES SHALL BE BROUGHT TO THE ATTENTION OF THE DESIGN PROFESSIONAL FOR CLARIFICATION PRIOR TO COMMENCEMENT OF CONSTRUCTION.

JOB #: 21-17367
DATE: 05/24/24

A801

J:\Walton County\Jobs\Aging Facility\21-17367-05- Code Update\Dwgs\Sheets\Architectural\A801 FINISHES FLOOR PLAN _ Plot Date: Thursday, May 30, 2024,3:26:15 PM, Plotted By: patriciam

© FOREFRONT ARCHITECTURE & ENGINEERING LLC 2014 THIS DOCUMENT AND/OR THE DESIGN CONCEPTS EXPRESSED HEREIN ARE THE PROPERTY OF FOREFRONT ARCHITECTURE & ENGINEERING LLC AND ALL RIGHTS OF OWNERSHIP, INCLUDING COPYRIGHT OF INTELLECTUAL PROPERTY, ARE RESERVED. ANY REPRODUCTIONS, COPYING, OR USE OF THIS DOCUMENT AND/OR THE DESIGN CONCEPT WITHOUT THE WRITTEN CONSENT OF FOREFRONT ARCHITECTURE & ENGINEERING LLC IS STRICTLY PROHIBITED AND PROTECTED BY UNITED STATES AND INTERNATIONAL LAW. IF PRINTED ON 11X17 SCALE IS HALF THE SIZE NOTED.

ABBREVIATIONS

AB	ANCHOR BOLT	JT	JOINT
A.F.F.	ABOVE FINISH FLOOR	KSI	KIPS PER SQUARE INCH
ADJ	ADJACENT	LT	LIGHT
AL	ALUMINUM	LV	LOUVER
ARCH	ARCHITECTURAL	LT	LAUNDRY TUB
ATT	ATTACHED	MAS	MASONRY
BD	BOARD	MATL	MATERIAL
BLDG	BUILDING	MAX	MAXIMUM
BM	BEAM	MECH	MECHANICAL
BOT	BOTTOM	MIN	MINIMUM
BLKG	BLOCKING	MET	METAL
BRG	BEARING	(N.T.S.)	NOT TO SCALE
CJ	CONTROL JOINT	OC	ON CENTER
CL	CENTERLINE	OD	OUTSIDE DIAMETER
CMU	CONCRETE MASONRY UNIT	OPNG	OPENING
COL	COLUMN	OPT	OPTIONAL
CONC	CONCRETE	OSB	ORIENTED STRAND BOARD
COND	CONDITION	OZ	OUNCE
CONT	CONTINUOUS	1/R	ONE ROD
CONST	CONSTRUCTION	1/S	ONE SHELF
CSK	COUNTERSINK	PRCST	PRECAST
C.O.	CASED OPENING	PREFAB	PREFABRICATED
C.T.	CERAMIC TILE	PB	PARTICLE BOARD
CLG	CEILING	PCBP	PORTLAND CEMENT BASED PLASTER
C.M.	CROWN MOULD	PL	PLATE
C.R.	CHAIR RAIL	PNL	PANEL
D	DRYER	PLY	PLYWOOD
d	PENNY	PR	PAIR
DBL	DOUBLE	PROJ	PROJECT/PROJECTED
DET	DETACHED	PSI	POUNDS PER SQ. IN.
DIA	DIAMETER	PSF	POUNDS PER SQ. FT.
DIR	DIRECTION	PT	PRESSURE TREATED
DN	DOWN	QUAD	QUADRUPLE
DR	DOOR	REF	REFERENCE
DW	DISHWASHER	REINF	REINFORCE-ING-ED
DWG	DRAWING	REQD	REQUIRED
DS	DOWNSPOUT	RM	ROOM
DTL	DETAIL	RNG	RANGE
EA	EACH	RGH OPNG	ROUGH OPENING
EXP JT	EXPANSION JOINT	R	RISER
ELEC	ELECTRICAL	RND	ROUND
EL	ELEVATION	R.&S.	ROD AND SHELF
EQ	EQUAL	SCH	SCHEDULE
EQUIP	EQUIPMENT	SHLV	SHELF
EXP	EXPANSION	SHTHG	SHEATHING
EXT	EXTERIOR	SIM	SIMILAR
FD	FLOOR DRAIN	SP	SOUTHERN PINE
FDN	FOUNDATION	SPF	SPRUCE-PINE-FIR
FL	FLOOR	SR	SHOWER ROD
FP	FIREPLACE	SST	STAINLESS STEEL
FR	FRAME	STL	STEEL
FT	FOOT/FEET	STR	STRUCTURAL
FTG	FOOTING	SUSP	SUSPENDED/SUSPENSION
GA	GAUGE	SGD	SLIDING GLASS DOOR
GALV	GALVANIZED	SQ	SQUARE
GC	GENERAL CONTRACTOR	TB	TOWEL BAR
GEN	GENERAL	TP	TOILET PAPER DISPENSER
GRADE	TOP OF FINISH GRADE	T & G	TONGUE AND GROOVE
GYP	GYPSUM	TYP	TYPICAL
HDWR	HARDWARE	T OR TR	TREAD
HDWD	HARDWOOD	TPL	TRIPLE
HGT	HEIGHT	UNO	UNLESS NOTED OTHERWISE
HOR	HORIZONTAL	VERT	VERTICAL
HR	HOUR	VP	VENT PIPE
HDR	HEADER	W	WASHER
HB	HOSE BIBB	W/	WITH
ID	INSIDE DIAMETER	WC	WATER CLOSET
INS	INSULATION	WD	WOOD
INT	INTERIOR	WWF	WELDED WIRE FABRIC
ID	INSIDE DIAMETER	W/O	WITHOUT
		WDW	WINDOW

1. GENERAL REQUIREMENTS

1.1 **DESIGN CODE:**

1. TO THE BEST OF THE DESIGN PROFESSIONALS KNOWLEDGE, THESE DOCUMENTS HAVE BEEN PREPARED WITH AND ARE IN COMPLIANCE WITH THE APPLICABLE MINIMUM BUILDING CODES AND THE APPLICABLE FIRE SAFETY STANDARDS AS DETERMINED BY THE LOCAL AUTHORITY IN ACCORDANCE CHAPTERS 553 AND 633 OF THE FLORIDA STATUES. THESE DOCUMENTS MEET OR EXCEED THE REQUIREMENTS OF: FLORIDA BUILDING CODE, BUILDING, 8TH EDITION (2023).

1.2 **DESIGN CRITERIA:**

1. REFERENCE STANDARDS
   - A. ALL CONCRETE WORK SHALL BE IN ACCORDANCE WITH AMERICAN CONCRETE INSTITUTE (ACI)318 AND 332.
   - B. ALL MASONRY WORK SHALL BE IN ACCORDANCE WITH ACI 530/530.1; AMERICAN SOCIETY OF CIVIL ENGINEERS (ASCE); TMS 402.
   - C. REINFORCING STEEL SHALL BE IN ACCORDANCE WITH ACI 318
   - D. ALL STEEL WORK SHALL BE IN ACCORDANCE WITH THE LATEST EDITION OF AISC MANUAL
   - E. ALL WOOD FRAMING SHALL BE IN ACCORDANCE WITH THE EDITIONS LISTED IN THE FLORIDA BUILDING CODE OF THE FOLLOWING REFERENCED DOCUMENTS:
     - I. NATIONAL DESIGN SPECIFICATIONS (NDS) FOR WOOD CONSTRUCTION BY THE AMERICAN FOREST AND PAPER ASSOCIATION (AFPA)
     - II. TIMBER CONSTRUCTION MANUAL BY THE AMERICAN INSTITUTE OF TIMBER CONSTRUCTION.
     - III. NATIONAL DESIGN STANDARD FOR METAL PLATE CONNECTED WOOD TRUSSES (ANSI: TPI-1 BY TRUSS PLATE INSTITUTE (TPI)
     - IV. GUIDE TO GOOD PRACTICE FOR HANDLING, INSTALLING, AND BRACING OF METAL PLATE CONNECTED WOOD TRUSSES (BCSI BY TPI AND WTCA).
     - V. ROOF AND WALL SHEATHING SHALL BE IN ACCORDANCE WITH APA PS 1-09.
     - VI. AMERICAN WOOD PROTECTION ASSOCIATION STANDARDS.

1.3 **DESIGN LOADS**

1. ROOF DEAD LOADS:	25 PSF
2. ROOF LIVE LOADS:	20 PSF
3. GROUND FLOOR LIVE LOAD:	100 PSF

1.4 **STRUCTURE CATEGORY AND CONSTRUCTION:**

1. BUILDING RISK CATEGORY:	II
2. BUILDING CONSTRUCTION TYPE:	TYPE V-B
3. OCCUPANCY CLASSIFICATION:	A2/B/S2
4. WIND SPEED PER ASCE 7-20:	135 MPH - ULTIMATE DESIGN WIND SPEED
5. WIND SPEED PER ASCE 7-20:	105 MPH - NOMINAL DESIGN WIND SPEED
6. EXPOSURE:	C
7. ENCLOSURE CLASSIFICATION:	ENCLOSED
8. INTERNAL PRESSURE COEFFICIENT:	+/- 0.18
9. WIND-BORNE DEBRIS ZONE:	NO

10. REFER TO DRAWINGS FOR NUMBER OF STORIES AND STRUCTURE HEIGHT

CURRENT RELEASE v3.3 020918

1.5 **GENERAL:**

1. CONTRACTOR AND SUB-CONTRACTORS SHALL STRICTLY OBSERVE ALL APPLICABLE CODES DURING THE COURSE OF CONSTRUCTION INCLUDING ALL STATE, CITY, AND COUNTY BUILDING, ZONING, ELECTRICAL, MECHANICAL, PLUMBING AND FIRE CODES. CONTRACTOR SHALL VERIFY ALL CODE REQUIREMENTS PRIOR TO COMMENCEMENT OF WORK.
2. CONTRACTOR SHALL VERIFY ALL DIMENSIONS IN THE FIELD AND SHALL NOTIFY THE DESIGN PROFESSIONAL OF RECORD OF ANY DISCREPANCY PRIOR TO CONSTRUCTION.
3. THE ARCHITECT / ENGINEER SHALL NOT BE RESPONSIBLE FOR SAFETY PROCEDURES, THE MEANS AND METHODS OF CONSTRUCTION, TECHNOLOGIES, OR THE FAILURE OF THE CONTRACTOR TO CARRY OUT THE WORK IN ACCORDANCE WITH THE DRAWINGS AND SPECIFICATIONS OR THE RELATED CODES.
4. CONTRACTOR SHALL FULLY REVIEW ALL ITEMS CONTAINED IN THE DRAWING AND SHALL COORDINATE ALL DIMENSIONS, LOCATE DEPRESSED SLABS, SLOPES, DRAINS, OUTLETS, RECESSES, BOLT SETTINGS, SLEEVES, ETC.
5. IT IS THE RESPONSIBILITY OF THE CONTRACTOR TO DETERMINE THE ERECTION PROCEDURE AND SEQUENCING.
6. UNLESS OTHERWISE NOTED ON THE DRAWINGS, ALL CONSTRUCTION SHALL COMPLY WITH THE MINIMUM REQUIREMENTS OF THE APPLICABLE FLORIDA BUILDING CODE AND LOCAL ORDINANCES.
7. ALL CODES, TRADE STANDARDS, AND MANUFACTURER'S INSTRUCTIONS NOTED IN THE DOCUMENTS SHALL BE THE LATEST ADOPTED EDITION.
8. NOTES, DETAILS, AND SECTIONS ON THE DRAWINGS ARE SHOWN AT SPECIFIC LOCATIONS AND ARE INTENDED TO SHOW GENERAL REQUIREMENTS THROUGHOUT. DETAILS NOTED 'TYPICAL' IMPLY ALL CONDITIONS TREATED SIMILARLY. CONTRACTOR SHALL MAKE MODIFICATIONS TO ACCOMMODATE MINOR VARIATIONS.
9. THE CONTRACTOR SHALL MAKE NO STRUCTURAL CHANGES OR MODIFICATIONS WITHOUT EXPRESSED WRITTEN APPROVAL OF THE DESIGN PROFESSIONAL OF RECORD.

2. SITE WORK

2.1 **SOIL:**

1. ALL WORK SHALL CONFORM TO THE FINAL GEOTECHNICAL REPORT AND FINAL GRADING PLAN ACCEPTED BY THE AUTHORITY HAVING JURISDICTION.
2. ALL SITE PREPARATORY WORK REQUIRED BY THE GEOTECHNICAL REPORT SHALL BE PRESUMED TO BE COMPLETED PRIOR TO COMMENCEMENT OF WORK.
3. FOUNDATION IS DESIGNED BASED ON AN ALLOWABLE SOIL BEARING PRESSURE OF 2000PSF INCLUDING RECOMMENDATIONS AND FINDINGS LISTED IN REPORT #10111-2023055, DATED JUNE 30, 2023 BY NOVA ENGINEERING AND ENVIRONMENTAL, LLC
4. CONTRACTOR SHALL VERIFY COMPACTION REQUIREMENTS PRIOR TO THE EXECUTION OF WORK. DISCREPANCIES SHALL BE BROUGHT TO THE ATTENTION OF THE DESIGN PROFESSIONAL PRIOR TO COMMENCEMENT OF WORK,
5. FOOTINGS SHALL BE PLACED ON UNDISTURBED SOIL OR COMPACTED ENGINEERED FILL FREE OF ORGANIC MATTER AND COMPACTED TO 95% OF THE MODIFIED PROCTOR, UNLESS OTHERWISE STATED IN THE GEOTECHNICAL REPORT.
6. BOTTOM OF FOOTINGS SHALL BE 12 INCHES MINIMUM BELOW FINISHED GRADE, OR AS REQUIRED BY LOCAL REQUIREMENTS.
7. NO WOOD, VEGETATION, STUMPS, CARDBOARD, CELLULOSE CONTAINING MATERIALS, OR TRASH SHALL BE BURIED WITHIN 15'-0" OF ANY BUILDING OR PROPOSED BUILDING
8. WATER MANAGEMENT AT THE PERIMETER SHALL BE MAINTAINED AND SHALL INCLUDE;
   - A. CONDENSATE DRAINS AND ROOF DOWN SPOUTS SHALL DISCHARGE AT LEAST 1'-0" FROM BUILDING SIDEWALLS.
   - B. IRRIGATION / SPRINKLER SYSTEMS, INCLUDING ALL RISERS AND SPRAY HEADS SHALL NOT BE INSTALLED WITHIN 1'-0" OF BUILDING SIDEWALLS.

2.2 **SOIL TREATMENT PER FBC 7TH EDITION (2020) :**

1. TERMITE PROTECTION SHALL BE PROVIDED BY REGISTERED TERMITICIDES, INCLUDING SOIL APPLIED PESTICIDES, BAITING SYSTEMS, AND PESTICIDES APPLIED TO WOOD OR OTHER APPROVED METHODS.
2. BOXED AREAS IN CONCRETE FLOORS FOR INSTALLATION OF TRAPS, ETC.,SHALL BE MADE WITH PERMANENT METAL OR PLASTIC FORMS. PERMANENT FORMS SHALL BE OF A SIZE AND DEPTH THAT WILL ELIMINATE THE DISTURBANCE OF SOIL AFTER INITIAL TREATMENT.
3. SOIL SHALL BE PROTECTED WITH MINIMUM 6 MIL VAPOR RETARDER FOLLOWING TREATMENT.
4. AFTER COMPLETION OF WORK, ALL LOOSE WOOD AND ORGANIC MATERIAL SHALL BE REMOVED FROM WITHIN 1'-0" OF THE BUILDING PERIMETER.
5. AT COMPLETION OF TERMITE TREATMENT, A CERTIFICATE OF COMPLIANCE SHALL BE ISSUED TO THE BUILDING DEPARTMENT BY A LICENSED PEST CONTROL COMPANY BEFORE A CERTIFICATE OF OCCUPANCY WILL BE ISSUED. THE CERTIFICATE SHALL STATE:
   - A. "THE BUILDING HAS RECEIVED A COMPLETE TREATMENT FOR THE PREVENTION OF SUBTERRANEAN TERMITES. THE TREATMENT IS IN ACCORDANCE WITH THE RULES AND LAWS OF THE FLORIDA DEPARTMENT OF AGRICULTURE AND CONSUMER SERVICES."

3. CONCRETE

3.1 **CONCRETE:**

1. ALL CONCRETE WORK SHALL BE IN ACCORDANCE WITH THE AMERICAN CONCRETE INSTITUTE ACI 318.
2. ALL CONCRETE SHALL HAVE A MINIMUM COMPRESSIVE STRENGTH AT 28-DAYS OF 3000 PSI, COMPLYING WITH ASTM C-94 UNLESS NOTED OTHERWISE IN DRAWINGS.
3. A MIX DESIGN SHALL BE SUBMITTED TO THE DESIGN PROFESSIONAL OF RECORD FOR ALL CONCRETE USED PRIOR TO PLACEMENT OF ANY CONCRETE.
4. MATERIALS FOR CONCRETE SHALL CONFORM TO THE FOLLOWING:
   - A. PORTLAND CEMENT - ASTM C 150
   - B. AGGREGATES:
     - I. COURSE AGGREGATE - ASTM C33
     - II. LIGHTWEIGHT AGGREGATE - ASTM C33
     - III. FINE AGGREGATE - ASTM C33
5. WATER SHALL BE CLEAN, POTABLE AND FREE OF CONTAMINANTS
6. ADMIXTURES SHALL BE AS NOTED IN THE APPROVED MIX DESIGN.

3.2 **TESTING AND SAMPLES**

1. ALL TESTING OF CONCRETE SHALL BE DONE BY AN INDEPENDENT TESTING LABORATORY IN ACCORDANCE WITH ASTM PROTOCOL. TEST REPORTS SHALL BE SUBMITTED TO THE DESIGN PROFESSIONAL OF RECORD WITHINSEVEN-DAYS OF LABORATORY TESTING.
2. THREE (3) TEST CYLINDERS SHALL BE MADE FOR EACH DAY'S POUR, FOR APPROXIMATELY 50 YARDS OF CONCRETE PLACED.
3. SLUMP TEST SHALL BE MADE ON EACH BATCH TESTED IN ACCORDANCE WITH ASTM C143.
4. ONE CYLINDER SHALL BE BROKEN AT 7-DAYS AND ONE AT 28-DAYS. IF NO FURTHER TEST IS NEEDED, THE RESERVE CYLINDER MAY BE DISCARDED AFTER SIXTY DAYS.

3.3 **REINFORCING**

1. REINFORCING SHALL HAVE GRADE IDENTIFICATION MARKS AND SHALL CONFORM TO ASTM A615 GRADE 40 OR 60.

REINFORCING STEEL MINIMUM REQUIREMENTS

40 KSI				60 KSI			
BAR SIZE	MINIMUM LAP	MINIMUM BEND DIA.	MINIMUM ACI HOOK	BAR SIZE	MINIMUM LAP	MINIMUM BEND DIA.	MINIMUM ACI HOOK
# 4	20"	3"	10"	# 4	24"	3"	10"
# 5	25"	3-3/4"	10"	# 5	30"	3-3/4"	10"
# 6	34"	4-1/2"	12"	# 6	36"	4-1/2"	11"
# 7	42"	5-1/4"	14"	# 7	42"	5-1/4"	13"

2. REINFORCING SHALL BE FREE OF RUST, SCALE, OR OTHER BOND-REDUCING COATINGS.
3. REINFORCING SHALL BE PLACED IN CONCRETE TO PROVIDE MINIMUM COVERAGE IN ACCORDANCE WITH ACI 318, OR AS INDICATE HEREIN:
   - A. CONCRETE CAST AGAINST AND PERMANENTLY EXPOSED TO EARTH - 3-INCHES.
   - B. CONCRETE EXPOSED TO EARTH OR WEATHER - 1 1/2-INCHES.
   - C. CONCRETE NOT EXPOSED TO WEATHER OR IN CONTACT WITH GROUND - 3/4-INCHES
4. ACCURATELY PLACE AND SUPPORT REINFORCING WITH CHAIRS, BAR SUPPORTS, SPACERS, OR HANGERS AS RECOMMENDED BY ACI DETAILING MANUAL.
5. PLACE ONE (1) ACI STANDARD LAP SPLICE BAR, OF THE SAME SIZE AS FOUNDATION REINFORCING, LOCATED AT THE OUTSIDE BAR OF FOUNDATION CORNERS.
6. WELDED WIRE MESH, IF USED, SHALL BE IN ACCORDANCE WITH ASTM A82 AND SHALL BE 6x6xW1.4xW1.4, UNLESS NOTED OTHERWISE ON DRAWINGS.
   - A. INSTALL WELDED WIRE MESH IN THE MIDDLE OF THE SLAB AND SUPPORT WITH APPROVED MATERIALS OR SUPPORTS AT SPACING NOT TO EXCEED3 FEET ON CENTER OR IN ACCORDANCE WITH THE MANUFACTURERS SPECIFICATIONS.
   - B. LAP ALL JOINTS IN WELDED WIRE MESH 8"
7. FIBER MESH, IF USED, SHALL BE IN LIEU OF WELDED WIRE MESH AND AS SPECIFIED IN THE CONCRETE DESIGN MIX.

3.4 **PLACEMENT AND FINISHING**

1. ALL CONCRETE PLACED UNDER ROOF PROTECTION SHALL BE PLACED OVER 6 MIL POLYETHYLENE VAPOR BARRIER, LAPPED 6" MINIMUM WITH ALL SEAMS TAPED, UNLESS NOTED OTHERWISE
2. PLACE ALL EMBEDDED ITEMS (ANCHOR BOLTS, DOWELS, ETC.) IMMEDIATELY PRIOR TO PLACEMENT OF CONCRETE OR DURING CONCRETING OPERATIONS.
3. PROTECT ALL CONCRETE FROM DAMAGE AFTER PLACEMENT.
4. CONCRETE SHALL BE PLACED WITHIN 90 MINUTES OF BATCHING.
5. CONCRETE SHALL BE PLACED WITHIN THE SLUMP LIMITS SPECIFIED IN THE DESIGN MIX.
6. WATER ADDED AT THE SITE SHALL BE KEPT TO A MINIMUM AND WITHIN THE SPECIFIED SLUMP. RUN MIXER FOR 30 REVOLUTIONS AT EIGHT TO TWELVE RPM FOLLOWING THE ADDITION OF WATER AT THE SITE.
7. CONCRETE SHALL NOT BE PLACED DURING RAIN. FOLLOWING PLACEMENT OF CONCRETE, PROTECT FROM RAIN PRIOR TO INITIAL SET.
8. PLACEMENT SHALL BE CONTINUOUS UNTIL ALL WORK IS COMPLETED.
9. DO NOT USE CONTAMINATED, DETERIORATED, OR RE-TEMPERED CONCRETE.
10. THOROUGHLY WORK CONCRETE AROUND REINFORCING BARS.
11. PLACE CONCRETE TO GRADES AND ELEVATIONS REQUIRED FOR PROJECT
12. REMOVE ALL GRADE STAKES AFTER PLACEMENT OF CONCRETE.
13. CONTRACTOR SHALL INSTALL SAW-CUT CONTROL JOINTS IN CONCRETE SLABS PER ACI 224.3R AS FOLLOWS:
    - A. PROVIDE SAW-CUT FOLLOWING FINISHING AS SOON AS CUT EDGES WILL NOT RAVEL
    - B. SAW CUTS SHALL BE A MINIMUM OF 1/8" WIDE
    - C. CUTS SHALL BE 1/4 OF SLAB DEPTH NO LESS THAN 1", WHICHEVER IS GREATER. FOR STEEL-FIBER-REINFORCED SLABS 1/3 THE SLAB DEPTH.
    - D. SAW CUTS SHALL NOT EXCEED 12 FEET IN ANY DIRECTION
    - E. LOCATE SAW CUT JOINTS:
      1. MAKE PANELS AS SQUARE AS POSSIBLE
      2. JOINT LOCATIONS SHALL NOT EXCEED 1.5 TO 1 RATIO
      3. PANELS SHALL NOT HAVE "T" OR "L" SHAPE
      4. NO RE-ENTRANT CORNERS SHALL BE ALLOWED
14. PROVIDE SURFACE FINISH REQUIRED FOR INTENDED FINAL APPLICATION.
15. SILL PLATE ANCHORS SHALL BE AS SPECIFIED IN SECTION 6.
16. CONSOLIDATE CONCRETE DURING PLACEMENT OPERATIONS.

4. COLD FORMED STEEL FRAMING

1. ALL COLD FORMED STEEL FRAMING SHALL CONFORM TO AMERICAN IRON AND STEEL INSTITUTE (AISI);"SPECIFICATION FOR THE DESIGN OF COLD-FORMED STEEL STRUCTURAL MEMBERS", LATEST EDITION.
2. MEMBER SIZE DESIGNATIONS AS SHOWN ON THE PLANS ARE IN CONFORMANCE W/ THE STANDARDS OF THE STEEL STUD MANUFACTURERS ASSOCIATION (SSMA).
3. ALL STUDS AND/ OR JOISTS AND ACCESSORIES SHALL BE OF THE TYPE, SIZE, STEEL THICKNESS AND SPACING SHOWN ON THE PLANS. STUDS, RUNNERS (TRACK) BRACING AND BRIDGING SHALL BE MANUFACTURED PER ASTM SPECIFICATION C955
4. ALL GALVANIZED STUDS,JOISTS AND ACCESSORIES, 16GA AND HEAVIER, SHALL BE FORMED FROM STEEL THAT CONFORMS TO THE REQUIREMENTS OF ASTM A653 W/ A YIELD OF 50 KSI MINIMUM.
5. ALL GALVANIZED STUDS, JOISTS AND ACCESSORIES, 18GA AND LIGHTER AND ALL TRACK SECTIONS SHALL BE FORMED FROM STEEL THAT CONFORMS TO THE REQUIREMENTS OF ASTM A653 W/ A YIELD OF 33 KSI MINIMUM.
6. ALL GALVANIZED STUDS, JOISTS AND ACCESORIES SHALL HAVE A MINIMUM G60 COATING IN CONFORMANCE W/ ASTM C955.
7. FASTENING OF COMPONENTS SHALL BE W/ #10 SELF DRILLING SCREWS MINIMUM.
8. VERTICAL WALL STUDS SHALL BE PLUMBED, ALIGNED AND SECURELY ATTACHED TO EACH FLANGE OF BOTH UPPER AND LOWER RUNNERS W/ #10 SELF DRILLING SCREWS. STUDS SHALL BE SEATED SQUARELY IN BOTH TOP AND BOTTOM TRACKS.
9. RUNNERS SHALL BE SECURELY ANCHORED TO THE SUPPORTING STRUCTURE AS SHOWN ON THE DRAWINGS.
10. SPLICES IN AXIAL LOAD BEARING MEMBERS SHALL NOT BE PERMITTED
11. CUTTING OF STEEL FRAMING MEMBERS MAY BE ACCOMPLISHED W/ A SAW OR SHEAR. TORCH CUTTING OF LOAD BEARING MEMBERS IS NOT PERMITTED.
12. MECHANICAL BRIDGING IS TO BE INSTALLED AT 4'-0" O.C. MINIMUM IN CONFORMANCE W/ AISI AND STRUCTURAL SHEATHING SSMA STANDARDS.

5. WOOD FRAMING

5.1 **LUMBER**

1.1 MATERIAL

1. ALL WOOD AND WOOD CONSTRUCTION SHALL COMPLY WITH THE FOLLOWING SPECIFICATIONS AND CODES INDICATED IN THE DESIGN CRITERIA:
2. LUMBER SHALL BE IN ACCORDANCE WITH NATIONAL GRADING RULES AND SHALL BEAR GRADE STAMP OF SPIB, OR OTHER ASSOCIATION RECOGNIZED BY THE AMERICAN INSTITUTE OF TIMBER CONSTRUCTION.
3. LUMBER 2-INCH OR LESS IN NOMINAL THICKNESS SHALL NOT EXCEED 19%MOISTURE CONTENT AT TIME OF INSTALLATION AND SHALL BE STAMPED "S-DRY", "K-D", OR "MC15". ALL LUMBER SHALL BE S4S.
5. INTERIOR BEARING AND EXTERIOR WOOD FRAMED WALLS SHALL BE SPF #2, OR BETTER, UNLESS NOTED OTHERWISE ON DRAWINGS.
6. INTERIOR NON-BEARING WALLS MAY BE 2x WOOD OR METAL STUDS @ 16" O.C. OR 24" O.C. W/ MID SPAN BLOCKING.

1.1.1 **PROTECTION OF WOOD & WOOD BASED PRODUCTS AGAINST DECAY**

1.2 **EXECUTION**

1. WOOD FASTENING SHALL BE SPECIFIED IN THE DRAWINGS. FASTENING NOT SPECIFICALLY IDENTIFIED ON DRAWINGS SHALL COMPLY WITH THE REQUIREMENTS OF THE BUILDING CODE.
2. INTERIOR BEARING AND EXTERIOR WOOD FRAMED WALLS SHALL BE NOMINAL4-INCHES WIDE SPACED AT 16-INCHES O.C. MAXIMUM, UNLESS NOTED OTHERWISE ON DRAWINGS.
3. DOUBLE TOP PLATES OF FRAME WALLS SHALL BE LAPPED 4'-0".
4. HEADERS SHALL BE AS SPECIFIED IN HEADER SCHEDULE WITH STUDS AND STRAPPING SPECIFIED. HEADERS SHALL BE SOUTHERN PINE #2, OR BETTER W/ 1/2" PLYWOOD OR OSB FLITCH PLATE BETWEEN MEMBERS, NAILED W/ (2) ROWS OF 16D'S @ 12" O.C. MAX SPACING. MINIMUM HEADER, UNLESS NOTED OTHERWISE SHALL BE (2)2X12.
5. A BUILT-UP OR SOLID SAWN COLUMN SHALL BE INSTALLED UNDER GIRDERS AND / OR BEAMS IN BEARING WALLS AS NOTED ON DRAWINGS.
6. SQUASH BLOCKS SHALL BE INSTALLED BELOW ALL COLUMNS AND BUILT-UP MEMBERS (INCLUDING JACKS AND KINGS AT OPENINGS) BETWEEN BOTTOM OF FLOOR SHEATHING AND TOP OF WALL BELOW. SQUASH BLOCKS SHALL BE OF THE SAME GRADE AND SIZE AS THE MEMBER ABOVE.
7. DRAFTSTOPPING SHALL BE INSTALLED WHERE THERE IS USABLE SPACE BOTH ABOVE AND BELOW THE CONCEALED SPACE TO 1000 SQUARE FEET.
   - A. DRAFTSTOPPING SHALL BE INSTALLED IN APPROXIMATELY EQUAL AREAS TO LIMIT THE CONCEALED SPACE OF A FLOOR / CEILING ASSEMBLY.
   - B. DRAFTSTOPPING SHALL BE OF NOT LESS THAN 1/2-INCH GYPSUM BOARD,3/8-INCH WOOD STRUCTURAL PANELS, 3/8-INCH TYPE 2-M-W PARTICLEBOARD.
   - C. DRAFTSTOPPING SHALL BE INSTALLED PARALLEL TO FLOOR FRAMING MEMBERS.
8. FIREBLOCKING SHALL BE INSTALLED AT ALL HORIZONTAL AND VERTICAL DRAFT OPENINGS.
   - A. BLOCKING SHALL BE IN THE FOLLOWING LOCATIONS:
     - I. IN CONCEALED SPACES OF STUD WALLS AND PARTITIONS.
     - II. VERTICALLY AT CEILING AND FLOOR LEVELS.
     - III. HORIZONTALLY AT INTERVALS EXCEEEDING 10 FEET.
     - IV. AT INTERCONNECTIONS BETWEEN HORIZONTAL AND VERTICAL SPACES SUCH AS SOFFITS, DROP CEILINGS, AND COVE CEILINGS.
     - V. AT OPENINGS AROUND VENTS, PIPES, CABLES AND WIRES AT CEILINGS AND FLOOR LEVEL.
   - B. FIREBLOCKING SHALL BE:
     - I. 2-INCH NOMINAL LUMBER, OR
     - II. ONE THICKNESS OF 23/32-INCH WOOD STRUCTURAL PANELS WITH JOINTS BACKED WITH 23/32-INCH WOOD STRUCTURAL PANELS, OR
     - III. 1/2-INCH GYPSUM BOARD, OR
     - IV. OTHER MATERIALS APPROVED BY THE CODE.
9. WALL SHEATHING SHALL BE 7/16" THICK 24/16 SPAN RATED PLYWOOD ATTACHED WITH 8d COMMON NAILS SPACED AT 12" O.C.
10. FLOOR SHEATHING SHALL BE A MINIMUM OF 23/32 INCH 24/16 SPAN RATED STRUCTURAL SHEATHING.

6. STRUCTURAL STEEL

STRUCTURAL WORK SHALL CONFORM TO THE " SPECIFICATION FOR THE DESIGN, FABRICATION AND ERECTION OF STRUCTURAL STEEL FOR BUILDINGS" BY THE AMERICAN INSTITUTE OF STEEL CONSTRUCTION, INC. LATEST EDITION.

1. STRUCTURAL STEEL SHALL BE ASTM A992,	FY=50KSI
2. MISC.STEEL SHALL BE ASTM A36	FY=36KSI
3. STEEL TUBING SHALL BE ASTM 500, GRADE B	FY=46KSI
4. STEEL PIPE SHALL BE ASTM A501	FY=36KSI

ALL BOLTED CONNECTIONS SHALL CONSIST OF MINIMUM 3/4 INCH DIAMETER ASTM A-325 HIGH STRENGTH BOLTS. THE FABRICATOR SHALL DESIGN BEAM CONNECTIONS FOR THE REACTIONS SHOWN ON THE PLANS. IF NOT SHOWN, A REACTION OF W/2 KIPS FROM TABLES IN PART 2 " ALLOWABLE UNIFORM LOADS IN KIPS FOR BEAMS LATERALLY SUPPORTED OF THE MANUAL OF STEEL CONSTRUCTION LATEST EDITION.
SHALL BE USED, BUT CONNECTIONS SHALL NOT HAVE LESS THAN 2 ROWS OF BOLTS. ANCHORS BOLTS SHALL CONFORM TO ASTM F1554 GRADE 36.

SUBMIT SHOP DRAWINGS INDICATING ALL SHOP AND ERECTION DETAILS, INCLUDING PROFILES, SIZES, SPACING, AND LOCATIONS OF STRUCTURAL MEMBERS, CONNECTION ATTACHMENTS, FASTENERS, LOADS AND TOLERANCES.

7. STEEL ROOF DECK

1. STEEL ROOF DECK SHALL BE 1 1/2", 20GA TYPE B GALV (G-60) AS MANUFACTURED BY VULCREAFT OR APPROVED EQUAL. 3 SPAN MAXIMUM CONSTRUCTION.
2. DECKING CONTRACTOR SHALL FURNISH AND INSTALL CLOSURE AT DECK END EDGES AND OPENINGS.
3. DECKING SHEETS SHALL BE CONTINUOUS FOR 3 SPANS MINIMUM.
4. 1 1/2" TYPE 'B' 20 GA METAL DECK WELDED TO SUPPORTS IN 36/3 PATTERN W/ #10 TEK SIDE LAP IN SPAN CONDITION. PROVIDE 5/8" DIAMETER PUDDLE WELDS AT 6" OC TO STEEL ANGLES AT PERIMETER

8. STRUCTURAL INSULATED PANEL (SIP)

1. SIP ROOF PANELS SHALL BE 8 1/4" THICK FOAM CORE PANELS WITH 7/16" OSB SKINS AS MANUFACTURED BY THERMOCORE PANEL SYSTEM OR APPROVED EQUAL.
2. SIP ROOF PANELS SHALL BE ATTACHED TO ATTACHED TO SUPPORTS AS SHOWN ON THE DRAWINGS.
3. SUBMIT SHOP DRAWINGS SHOWING PANEL LAYOUT, ATTACHMENT AND APPLICABLE DETAILS.

9. SHOP DRAWINGS, AND SUBMITTALS

1. SHOP DRAWINGS SHALL BE REVIEWED FOR GENERAL COMPLIANCE WITH THE DESIGN INTENT OF THE CONSTRUCTION DOCUMENTS ONLY. SPECIFIC DETAILS, DIMENSIONS AND CODE COMPLIANCE SHALL BE THE RESPONSIBILITY OF THE CONTRACTOR.
2. THE REVIEW PROCESS FOR SHOP DRAWINGS AND CALCULATIONS SHALL BE:
   - 2.1. OVERSEEN AND SIGNED BY THE DELEGATED ENGINEER.
   - 2.2. REVIEWED, ACCEPTED AND STAMPED BY THE CONTRACTOR.
   - 2.3. SUBMITTED AS APPROVED BY THE CONTRACTOR TO THE REGISTERED DESIGN PROFESSIONAL.
   - 2.4. THE SHOP DRAWINGS SHALL BE APPROVED BY ALL PARTIES PRIOR TO THE FABRICATION OF MATERIALS.
   - 2.5. ALL ALTERATIONS OR MODIFICATIONS OF THE SHOP DRAWINGS SHALL BE CLEARLY INDICATED AND FOLLOW THE SAME APPROVAL STEPS AS INDICATED ABOVE.
   - 2.6. (1) ONE COPY OF THE FINAL VERSION OF EACH SHOP DRAWINGS SHALL BE PROVIDED BY THE CONTRACTOR TO THE DESIGN PROFESSIONAL.
3. REVIEW AND/OR APPROVAL OF THE SHOP DRAWINGS BY THE DESIGN PROFESSIONAL DOES NOT RELIEVE THE CONTRACTOR OF THE OBLIGATION TO REVIEW AND APPROVE THE FINAL VERSION OF THE SHOP DOCUMENTS.
4. CONTRACT DOCUMENTS SHALL GOVERN OVER SHOP DRAWINGS OR SUBMITTALS, EVEN IF SHOP DRAWINGS AND SUBMITTALS HAVE BEEN APPROVED BY THE REGISTERED DESIGN PROFESSIONAL. CONTACT THE DESIGN PROFESSIONAL IMMEDIATELY IF CONFLICTS ARISE.
5. SHOP DRAWINGS REQUIRED TO BE SUBMITTED FOR THIS PROJECT ARE:
   - 5.1 STRUCTURAL STEEL
   - 5.2 MISCELLANEOUS STEEL
   - 5.3 STEEL DECK
   - 5.4 SIP ROOF PANELS
6. SHOP DRAWINGS SHALL SHOW ERECTION PLANS, FRAMING SECTIONS, COMPONENTS AND CONNECTION DETAILS. ALL PORTIONS OF THE SHOP DRAWING ELEMENTS THAT INTERFACE/CONNECT WITH ANY PORTION OF THE MAIN STRUCTURAL SYSTEM, AS DESIGNED IN THIS DOCUMENT, SHALL BE DETAILED AND CONFIGURED TO MATCH THE INTENT EXPRESSED IN THIS DOCUMENT. AND SUCH CONDITIONS THAT ARE NOT EXPRESSED BY THIS DOCUMENT SHALL BE DESIGNED IN COMPLIANCE OF THE SPECIFICATIONS SET BY THIS DOCUMENT AND BY THE LOCAL AUTHORITIES.

REVISION
0 | 00/00/00

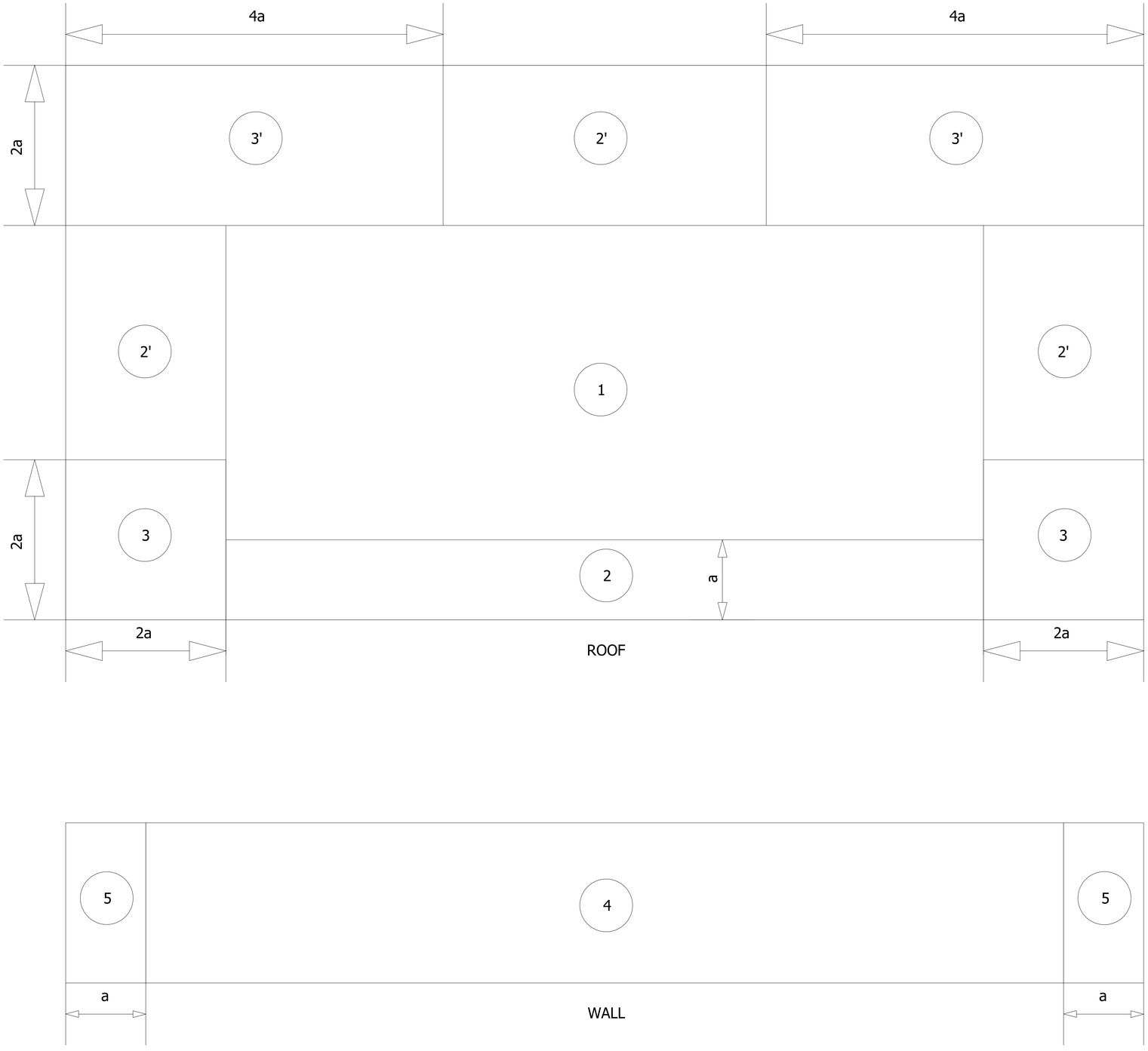

COMPONENTS AND CLADDING WIND PRESSURES
VULT = 135MPH, EXPOSURE C, ENCLOSED
a = 4'-6"

ZONE	FIGURE	A≤ 10.00 ft² psf	A= 20.00 ft² psf	A= 50.00 ft² psf
1	30.3-5A	+10.19/-27.17	+9.60/-27.17	+9.60/-27.17
2	30.3-5A	+10.19/-31.42	+9.60/-30.78	+9.60/-29.94
2'	30.3-5A	+10.19/-37.79	+9.60/-37.15	+9.60/-36.30
3	30.3-5A	+10.19/-42.03	+9.60/-38.20	+9.60/-33.13
3'	30.3-5A	+10.19/-59.02	+9.60/-52.63	+9.60/-44.18
4	30.3-1	+22.93/-24.84	+21.91/-23.82	+20.57/-22.48
5	30.3-1	+22.93/-30.57	+21.91/-28.54	+20.57/-25.85
1_OH	30.3-2A	+9.60/-36.09	+9.60/-35.45	+9.60/-34.61
1'_OH	30.3-2A	+9.60/-36.09	+9.60/-35.45	+9.60/-34.61
2_OH	30.3-2A	+9.60/-48.83	+9.60/-44.31	+9.60/-38.35
2'_OH	30.3-2A	+9.60/-48.83	+9.60/-44.31	+9.60/-38.35
3_OH	30.3-2A	+9.60/-67.93	+9.60/-60.04	+9.60/-49.59
3'_OH	30.3-2A	+9.60/-67.93	+9.60/-60.04	+9.60/-49.59

ZONE	FIGURE	A≤ 100.00 ft² psf	A= 200.00 ft² psf	A= 500.00 ft² psf
1	30.3-5A	+9.60/-27.17	+.60/-27.17	+9.60/-27.17
2	30.3-5A	+9.60/-29.30	+9.60/-29.30	+9.60/-29.30
2'	30.3-5A	+9.60/-35.67	+9.60/-35.67	+9.60/-35.67
3	30.3-5A	+9.60/-29.30	+9.60/-29.30	+9.60/-29.30
3'	30.3-5A	+9.60/-37.79	+9.60/-37.79	+9.60/-37.79
4	30.3-1	+19.55/-21.46	+18.54/-20.45	+17.20/-19.11
5	30.3-1	+19.55/-23.82	+18.54/-21.79	+17.20/-19.11
1_OH	30.3-2A	+9.60/-33.97	+9.60/-28.48	+9.60/-21.23
1'_OH	30.3-2A	+9.60/-33.97	+9.60/-28.48	+9.60/-21.23
2_OH	30.3-2A	+9.60/-33.87	+9.60/-29.32	+9.60/-23.35
2'_OH	30.3-2A	+9.60/-33.83	+9.60/-29.32	+9.60/-23.35
3_OH	30.3-2A	+9.60/-41.69	+9.60/-33.79	+9.60/-23.35
3'_OH	30.3-2A	+9.60/-41.69	+9.60/-33.79	+9.60/-23.35

REVISION
0 | 00/00/00

ARCHITECTURE + ENGINEERING
License No. 102538
1230 Oakley Seaver Drive, Suite 200 - Clermont, FL 34711
License No. 26002939
P: 888-850-FFAE (3323)
www.forefrontae.com
FOREFRONT
Service Beyond Design

SEAL

SENIOR CENTER
22174 US HIGHWAY 331 N PAXTON FL 32567
C&C WIND PRESSURES

ANY DISCREPANCY OR ERROR IN DIMENSIONS OR NOTES SHALL BE BROUGHT TO THE ATTENTION OF THE DESIGN PROFESSIONAL FOR CLARIFICATION PRIOR TO COMMENCEMENT OF CONSTRUCTION.

JOB #: 21-17367
DATE: 05/24/24
S002

J:\Walton County\Jobs\Aging Facility\21-17367-05- Code Update\Dwgs\Sheets\Structural\S002 C&C WIND PRESSURES .; Plot Date: Wednesday, May 29, 2024_3:27:25 PM; Plotted By: patriciam

© FOREFRONT ARCHITECTURE & ENGINEERING LLC 2014 THIS DOCUMENT AND/OR THE DESIGN CONCEPTS EXPRESSED HEREIN ARE THE PROPERTY OF FOREFRONT ARCHITECTURE & ENGINEERING LLC AND ALL RIGHTS OF OWNERSHIP, INCLUDING COPYRIGHT OF INTELLECTUAL PROPERTY, ARE RESERVED. ANY REPRODUCTIONS, COPYING, OR USE OF THIS DOCUMENT AND/OR THE DESIGN CONCEPT WITHOUT THE WRITTEN CONSENT OF FOREFRONT ARCHITECTURE & ENGINEERING LLC IS STRICTLY PROHIBITED AND PROTECTED BY UNITED STATES AND INTERNATIONAL LAW. IF PRINTED ON 11X17 SCALE IS HALF THE SIZE NOTED.

COMPONENTS AND CLADDING WIND PRESSURES
VULT = 135MPH, EXPOSURE C, OPEN, OBSTRUCTED
a = 3'-0"

ZONE	FIGURE	A≤ 9.00 ft^2 psf	9.00>A>36.00 ft^2 psf	A>36.00 ft^2 psf
1	Fig 30.7-1	+9.99/-23.34	+9.99/-23.34	+9.99/-23.34
2	Fig 30.7-1	+15.75/-35.16	+15.75/-35.16	+9.99/-23.34
3	Fig 30.7-1	+19.98/-70.02	+15.75/-35.16	+9.99/-23.34

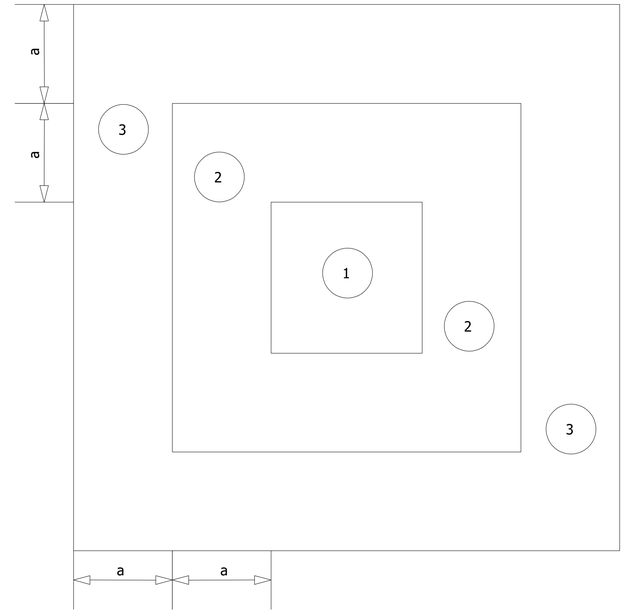

PORTE COCHERE

ARCHITECTURE + ENGINEERING
License No. 102538
License No. 26002939
1230 Oakley Seaver Drive, Suite 200 - Clermont, FL 34711
P: 888-850-FFAE (3323)
www.forefrontae.com
FOREFRONT
Service Beyond Design

REVISION
0 | 00/00/00

SENIOR CENTER

22174 US HIGHWAY 331 N PAXTON FL 32567

C&C WIND PRESSURES

ANY DISCREPANCY OR ERROR IN DIMENSIONS OR NOTES SHALL BE BROUGHT TO THE ATTENTION OF THE DESIGN PROFESSIONAL FOR CLARIFICATION PRIOR TO COMMENCEMENT OF CONSTRUCTION.

JOB #: 21-17367
DATE: 05/24/24

S003

J:\Walton County\Jobs\Aging Facility\21-17367-05- Code Update\Dwgs\Sheets\Structural\0003 C&C WIND PRESSURES ; Plot Date: Wednesday, May 29, 2024,3:27:34 PM; Plotted By: patricam

© FOREFRONT ARCHITECTURE & ENGINEERING LLC 2014 THIS DOCUMENT AND/OR THE DESIGN CONCEPTS EXPRESSED HEREIN ARE THE PROPERTY OF FOREFRONT ARCHITECTURE & ENGINEERING LLC AND ALL RIGHTS OF OWNERSHIP, INCLUDING COPYRIGHT OF INTELLECTUAL PROPERTY, ARE RESERVED. ANY REPRODUCTIONS, COPYING, OR USE OF THIS DOCUMENT AND/OR THE DESIGN CONCEPT WITHOUT THE WRITTEN CONSENT OF FOREFRONT ARCHITECTURE & ENGINEERING LLC IS STRICTLY PROHIBITED AND PROTECTED BY UNITED STATES AND INTERNATIONAL LAW. IF PRINTED ON 11X17 SCALE IS HALF THE SIZE NOTED.

FOUNDATION SCHEDULE		
MARK	SIZE	REINFORCING NOTES
F3	3'-0"x3'-0"x1'-0"	(4) #5 EACH WAY AT BOTTOM
F4	4'-0"x4'-0"x1'-0"	(5) #5 EACH WAY AT BOTTOM

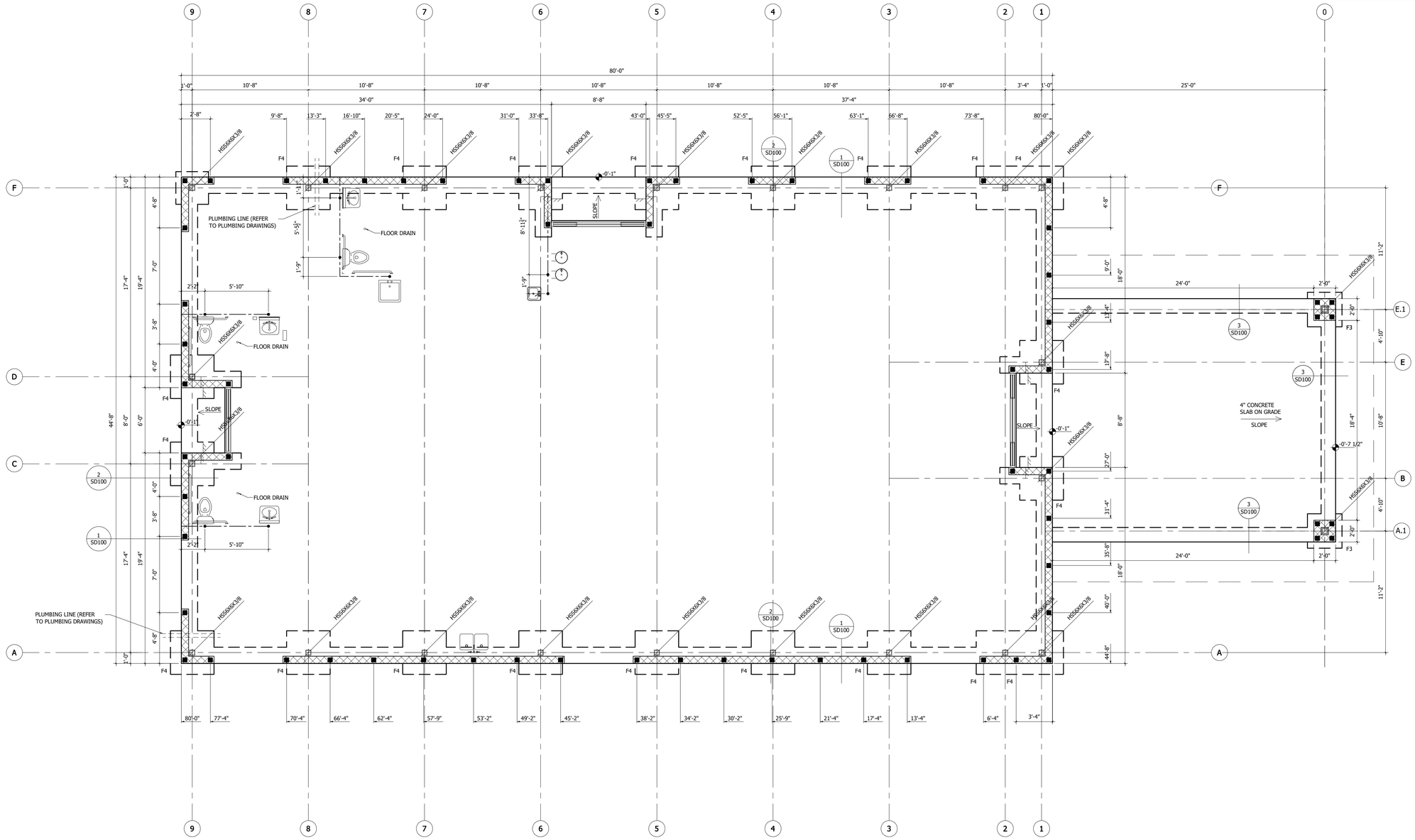

FOUNDATION PLAN

SCALE: 3/16"=1'-0"

NOTES:
1. TOP OF SPREAD FOOTINGS AT ELEV. (-1'-0") UNO
2. DENOTES GROUT FILLED VERTICAL CMU CELL REINFORCED WITH (1) #5

ARCHITECTURE + ENGINEERING
License No. 102538
License No. 26002939
1230 Oakley Seaver Drive, Suite 200 - Clermont, FL 34711
P: 888-850-FFAE (3323)
www.forefrontae.com
FOREFRONT
Service Beyond Design

REVISION
0 | 00/00/00

SENIOR CENTER

22174 US HIGHWAY 331 N PAXTON FL 32567

FOUNDATION PLAN

ANY DISCREPANCY OR ERROR IN DIMENSIONS OR NOTES SHALL BE BROUGHT TO THE ATTENTION OF THE DESIGN PROFESSIONAL FOR CLARIFICATION PRIOR TO COMMENCEMENT OF CONSTRUCTION.

JOB #: 21-17367
DATE: 05/24/24

S101

J:\Walton County\Jobs\Aging Facility\21-17367-SS- Code Update\Dwgs\Sheets\Structural\S101 FOUNDATION PLAN , Plot Date: Wednesday, May 29, 2024,3:27:47 PM, Plotted By: patriciam

© FOREFRONT ARCHITECTURE & ENGINEERING LLC 2014 THIS DOCUMENT AND/OR THE DESIGN CONCEPTS EXPRESSED HEREIN ARE THE PROPERTY OF FOREFRONT ARCHITECTURE & ENGINEERING LLC AND ALL RIGHTS OF OWNERSHIP, INCLUDING COPYRIGHT OF INTELLECTUAL PROPERTY, ARE RESERVED. ANY REPRODUCTIONS, COPYING, OR USE OF THIS DOCUMENT AND/OR THE DESIGN CONCEPT WITHOUT THE WRITTEN CONSENT OF FOREFRONT ARCHITECTURE & ENGINEERING LLC IS STRICTLY PROHIBITED AND PROTECTED BY UNITED STATES AND INTERNATIONAL LAW. IF PRINTED ON 11X17 SCALE IS HALF THE SIZE NOTED.

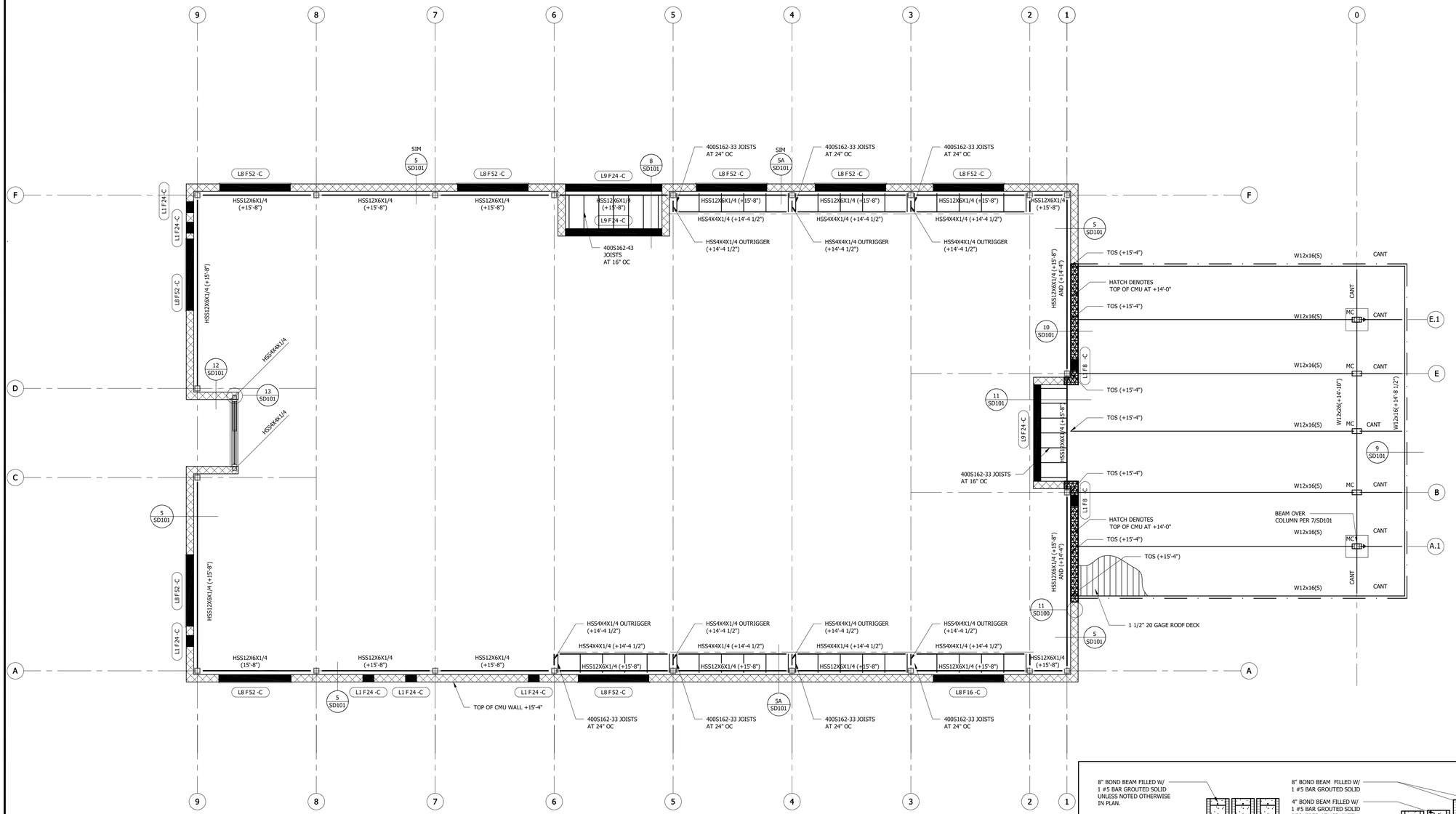

INTERMEDIATE LEVEL FRAMING PLAN

SCALE: 3/16"=1'-0"

NOTES:
1. TOP OF STEEL NOTED AS (+XX'-XX")
2. MC - DENOTES MOMENT CONNECTION PER DETAIL 6/SD101
3. L8F16-C - DENOTES COMPOSITE MASONRY LINTEL PER SCHEDULE ON THIS SHEET

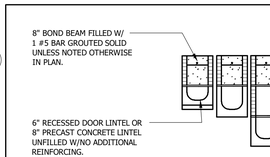

TYPE A - NON COMPOSITE LINTEL SECTION

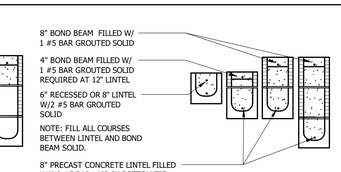

TYPE B - COMPOSITE LINTEL SECTION

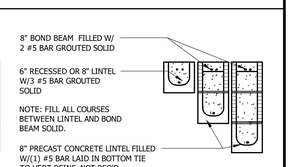

TYPE C - COMPOSITE LINTEL SECTION

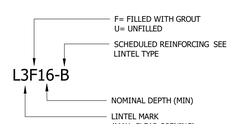

UNLESS NOTED OTHERWISE NOMINAL WIDTH TO BE 8" FOR COMPOSITE DEPTH NOT SHOWN USE THE NEXT LOWER DEPTH. FOR CLEAR OPENING NOT SHOWN USE THE NEXT GREATER CLEAR OPENING. MINIMUM BEARING LENGTH (4") 8" STANDARD

BUILDER NOTE: FOR LINTEL DEPTHS SPECIFIED ON PLAN THAT ARE NOT IN THIS CHART, USE THE VALUE FOR THE CLOSEST LESSER DEPTH. (i.e. 30" DEEP SPECIFIED, USE VALUE FOR 24" DEEP)

PRECAST LINTEL LOAD TABLE

12/11/2023

LOADS LISTED BELOW HAVE BEEN CALCULATED OR COMPILED FROM DATA FROM THE FOLLOWING APPROVED MANUFACTURERS.
CAST-CRETE, QUALITY PRECAST CO., WEKIWA CONCRETE, RINKER, ALLIED PRECAST, FLORIDA ROCK INDUSTRIES, A-1 BLOCK CORP (PRO-CRETE) AND LOTT'S CONCRETE

	MAXIMUM SAFE UNIFORM LOAD PER FOOT								
MARK	MAX. CLEAR OPENING	TYPE A 14" MIN.	TYPE B & C 6" DEEP	TYPE B & C 8" DEEP	TYPE B & C 12" DEEP	TYPE B & C 14" DEEP	TYPE B & C 16" DEEP	TYPE B & C 24" DEEP	TYPE B & C 32" DEEP
L1	1'-6"	2231	N/A	3069	4165	5206	6113	8974	10,000
L2	2'-2"	2231	N/A	3069	4165	5206	6113	8974	10,000
L3	3'-2"	1343	1151	2165	4165	5206	6113	8672	10,000
L4	4'-6"	860	809	1261	2622	3584	4360	6036	8328
L6	6'-2"	570	586	991	1755	2193	2661	5681	6472
L8	8'-0"	416	435	635	1214	1517	1843	3486	6390
L9	9'-2"	352	N/A	541	979	1224	1533	2781	4754
L10	10'-0"	315	N/A	567	882	1102	1366	2423	4006
L11	11'-2"	277	N/A	496	765	956	1075	1838	2883
L12	12'-0"	255	N/A	458	698	873	1075	1838	2883
L13	12'-8"	N/A	N/A	430	652	815	1002	1697	2630
L14	13'-4"	N/A	N/A	430	696	N/A	1087	1727	2570
L16	16'-0"	N/A	N/A	296	456	N/A	864	1326	1924
L18	18'-0"	N/A	N/A	230	357	N/A	721	1037	1614
L20	20'-0"	N/A	N/A	180	274	N/A	581	845	1387
L21	20'-8"	N/A	N/A	165	250	N/A	543	784	1376
L22	22'-8"	N/A	N/A	129	190	N/A	448	654	1148

ARCHITECTURE + ENGINEERING
License No. 102538
License No. 26002939
1230 Oakley Seaver Drive, Suite 200 - Clermont, FL 34711
P: 888-860-FFAE (3323)
www.forefrontae.com
FOREFRONT
Service Beyond Design

REVISION
0 | 00/00/00

SENIOR CENTER

22174 US HIGHWAY 331 N PAXTON FL 32567

INTERMEDIATE LEVEL FRAMING PLAN

ANY DISCREPANCY OR ERROR IN THESE DRAWINGS SHALL BE BROUGHT TO THE ATTENTION OF THE DESIGN PROFESSIONAL FOR CLARIFICATION PRIOR TO COMMENCEMENT OF CONSTRUCTION.

JOB #: 21-17367
DATE: 05/24/24

$200

© FOREFRONT ARCHITECTURE & ENGINEERING LLC 2014 THIS DOCUMENT AND/OR THE DESIGN CONCEPTS EXPRESSED HEREIN ARE THE PROPERTY OF FOREFRONT ARCHITECTURE & ENGINEERING LLC AND ALL RIGHTS OF OWNERSHIP, INCLUDING COPYRIGHT OF INTELLECTUAL PROPERTY, ARE RESERVED. ANY REPRODUCTIONS, COPYING, OR USE OF THIS DOCUMENT AND/OR THE DESIGN CONCEPT WITHOUT THE WRITTEN CONSENT OF FOREFRONT ARCHITECTURE & ENGINEERING LLC IS STRICTLY PROHIBITED AND PROTECTED BY UNITED STATES AND INTERNATIONAL LAW. IF PRINTED ON 11X17 SCALE IS HALF THE SIZE NOTED.

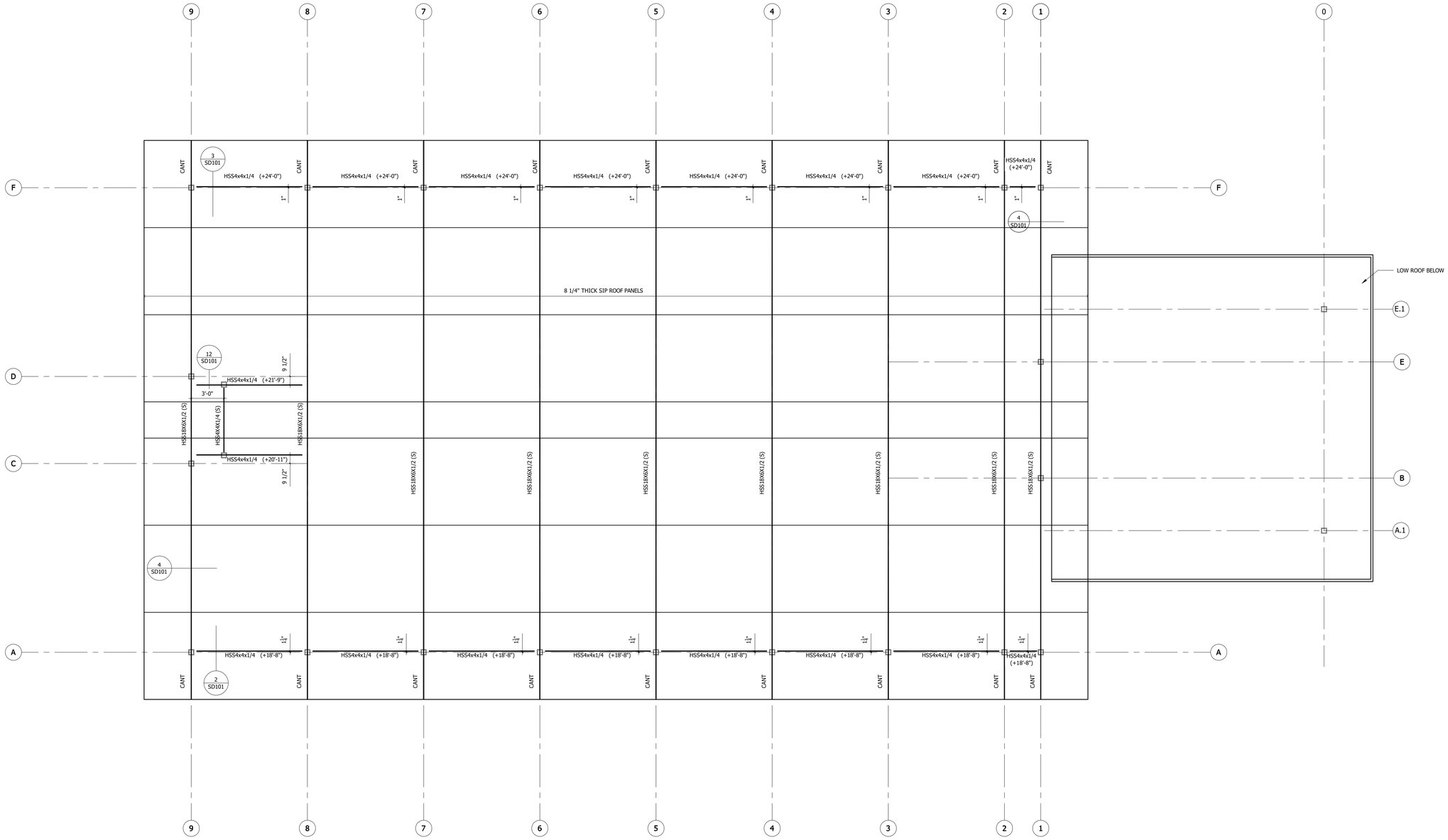

ROOF FRAMING PLAN

SCALE: 3/16"=1'-0"

ARCHITECTURE + ENGINEERING
License No. 102538
License No. 26002939
1230 Oakley Seaver Drive, Suite 200 - Clermont, FL 34711
P: 888-850-FFAE (3323)
www.forefrontae.com
FOREFRONT
Service Beyond Design

REVISION
0 | 00/00/00

SENIOR CENTER
22174 US HIGHWAY 331 N PAXTON FL 32567
ROOF FRAMING PLAN

ANY DISCREPANCY OR ERROR IN DIMENSIONS OR NOTES SHALL BE BROUGHT TO THE ATTENTION OF THE DESIGN PROFESSIONAL FOR CLARIFICATION PRIOR TO COMMENCEMENT OF CONSTRUCTION.

JOB #: 21-17367
DATE: 05/24/24
S201

J:\Walton County\Jobs\Aging Facility\21-17367-05- Code Update\Dwgs\Sheets\Structural\S201 ROOF FRAMING PLAN , Plot Date: Wednesday, May 29, 2024_3:26:08 PM, Plotted By: patricam

© FOREFRONT ARCHITECTURE & ENGINEERING LLC 2014 THIS DOCUMENT AND/OR THE DESIGN CONCEPTS EXPRESSED HEREIN ARE THE PROPERTY OF FOREFRONT ARCHITECTURE & ENGINEERING LLC AND ALL RIGHTS OF OWNERSHIP, INCLUDING COPYRIGHT OF INTELLECTUAL PROPERTY, ARE RESERVED. ANY REPRODUCTIONS, COPYING, OR USE OF THIS DOCUMENT AND/OR THE DESIGN CONCEPT WITHOUT THE WRITTEN CONSENT OF FOREFRONT ARCHITECTURE & ENGINEERING LLC IS STRICTLY PROHIBITED AND PROTECTED BY UNITED STATES AND INTERNATIONAL LAW. IF PRINTED ON 11X17 SCALE IS HALF THE SIZE NOTED.

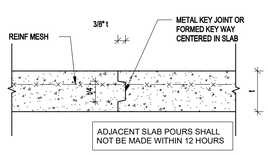

Section		Scale	
9	TYP. CONSTRUCTION JOINT DETAIL	3/4" = 1'-0"	
		File Name	N/A

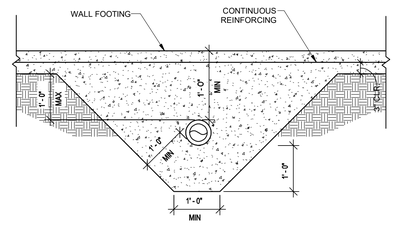

Section		Scale	
6	FOOTING SLEEVE	3/4" = 1'-0"	
		File Name	N/A

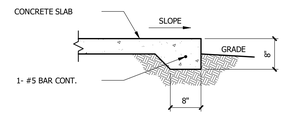

SECTION:		SCALE:	
3	THICKENED EDGE DETAIL	3/4"=1'-0"	
		File Name:	MF05

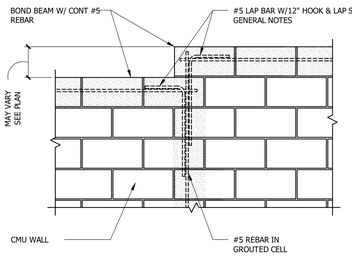

SECTION:		SCALE:	
11	STEPPED BOND BEAM	3/4"=1'-0"	
		File Name:	MW07

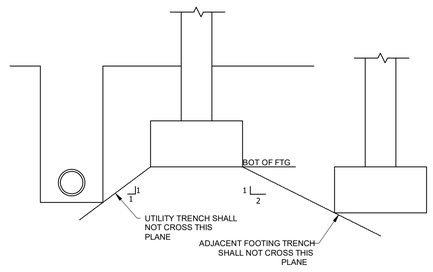

Section		Scale	
8	TRENCH LOCATION DETAIL	3/4" = 1'-0"	
		File Name	N/A

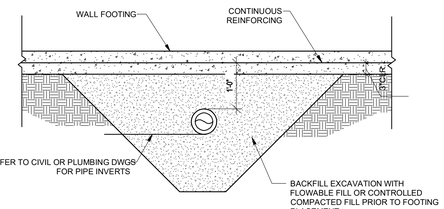

Section		Scale	
5	PIPE TRENCH BACKFILL @ FOOTING	3/4" = 1'-0"	
		File Name	N/A

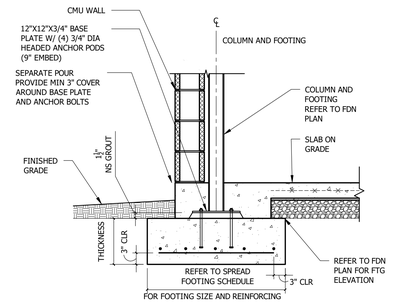

SECTION:		SCALE:	
2	STEEL COLUMN FOOTING DETAIL	3/4" =1'-0"	
		File Name:	SF09-MOD

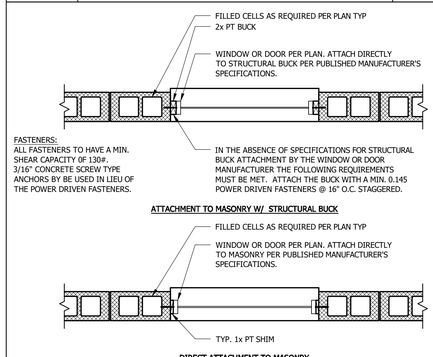

SECTION:		SCALE:	
10	TYP. WINDOW & DOOR ATTACHMENTS	3/4"=1'-0"	
		File Name:	MW29

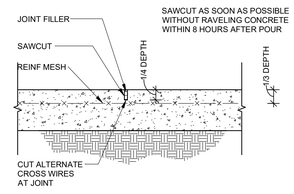

Section		Scale	
7	TYP. CONTRACTION JOINT DETAIL	3/4" = 1'-0"	
		File Name	N/A

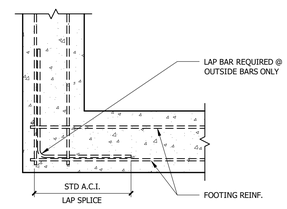

SECTION:		SCALE:	
4	TYPICAL FOOTING REBAR LAP	3/4"=1'-0"	
		File Name:	CF01

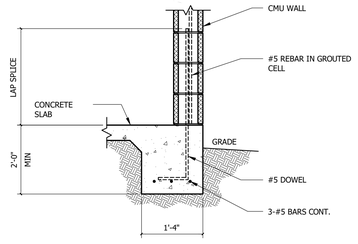

SECTION:		SCALE:	
1	MONO FOOTING		
		File Name:	MF20-MOD

ARCHITECTURE + ENGINEERING
License No. 26002939
License No. 102538
1230 Oakley Seaver Drive, Suite 200 - Clermont, FL 34711
P: 888-850-FFAE (3323)
www.forefrontae.com
FOREFRONT
Service Beyond Design

REVISION:	
0	00/00/00

SEAL

SENIOR CENTER
22174 US HIGHWAY 331 N PAXTON FL 32567
STRUCTURAL DETAILS

ANY DISCREPANCY OR ERROR IN DIMENSIONS OR NOTES SHALL BE BROUGHT TO THE ATTENTION OF THE ARCHITECT/ENGINEER PRIOR TO CONSTRUCTION FROM S.T.R. COMMENCEMENT OF CONSTRUCTION.

JOB #: 21-17367
DATE: 05/24/24

SD100

J:\Walton County\Jobs\Aging Facility\21-17367-05- Code Update\Dwgs\Sheets\Structural\SD100 STRUCTURAL DETAILS ; Plot Date: Wednesday, May 29, 2024,3:28:21 PM; Plotted By: patriciam

© FOREFRONT ARCHITECTURE & ENGINEERING LLC 2014 THIS DOCUMENT AND/OR THE DESIGN CONCEPTS EXPRESSED HEREIN ARE THE PROPERTY OF FOREFRONT ARCHITECTURE & ENGINEERING LLC AND ALL RIGHTS OF OWNERSHIP, INCLUDING COPYRIGHT OF INTELLECTUAL PROPERTY, ARE RESERVED. ANY REPRODUCTIONS, COPYING OR USE OF THIS DOCUMENT AND/OR THE DESIGN CONCEPT WITHOUT THE WRITTEN CONSENT OF FOREFRONT ARCHITECTURE & ENGINEERING LLC IS STRICTLY PROHIBITED AND PROTECTED BY UNITED STATES AND INTERNATIONAL LAW. IF PRINTED ON 11X17 SCALE IS HALF THE SIZE NOTED.

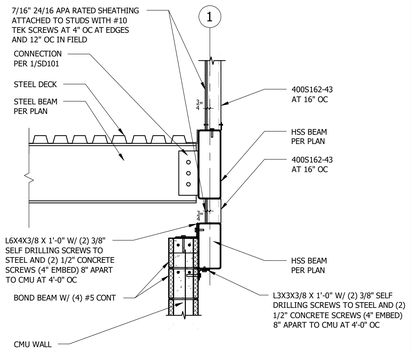

SECTION:		SCALE:
10	WALL SECTION	3/4" =1'-0"
		File Name:

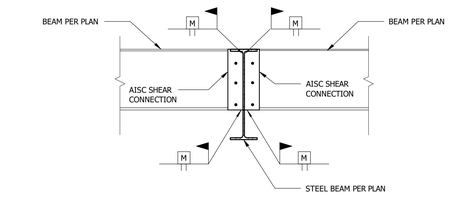

SECTION:		SCALE:
6	BEAM MOMENT CONNECTION DETAIL	3/4" =1'-0"
		File Name:

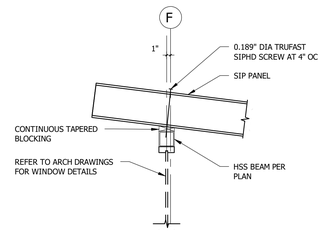

SECTION:		SCALE:
3	ROOF SECTION	3/4" =1'-0"
		File Name:

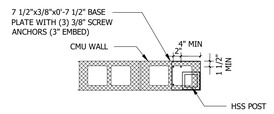

SECTION:		SCALE:
13	PLAN DETAIL AT BASE OF ENTRY COLUMN	3/4" =1'-0"
		File Name:

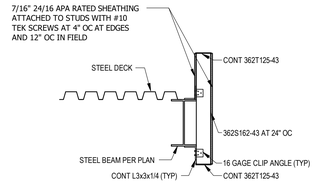

SECTION:		SCALE:
9	PORTE COCHERE ROOF EDGE	3/4" =1'-0"
		File Name:

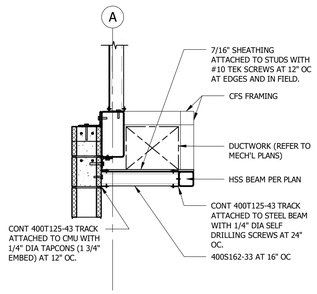

REFER TO SECTION 5/SD101 FOR INFORMATION NOT SHOWN

SECTION:		SCALE:
5A	SECTION AT MECH'L SHELF	3/4" =1'-0"
		File Name:

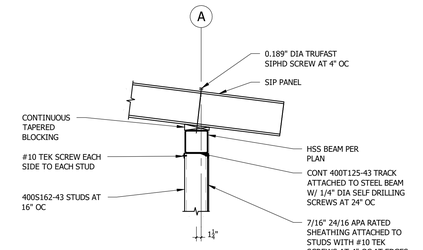

SECTION:		SCALE:
2	ROOF SECTION	3/4" =1'-0"
		File Name:

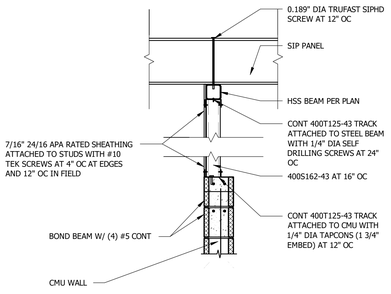

SECTION:		SCALE:
12	WALL SECTION AT ENTRY	3/4" =1'-0"
		File Name:

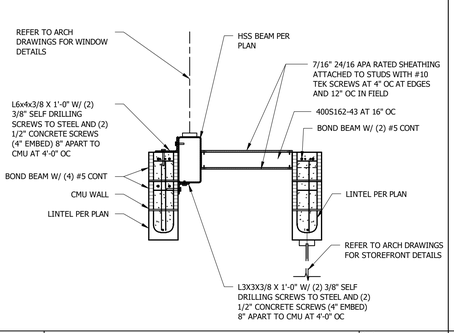

SECTION:		SCALE:
8	WALL SECTION	3/4" =1'-0"
		File Name:

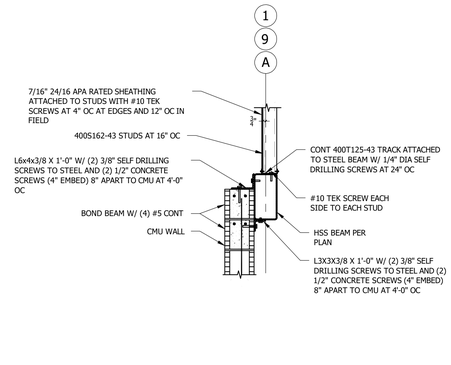

SECTION:		SCALE:
5	WALL SECTION	3/4" =1'-0"
		File Name:

SIMPLE BEAM CONNECTION SCHEDULE SHEAR PLATE CONNECTION

MEMBER (DEPTH)	# OF BOLTS ø (A325N)	CONNECTION PLATE THICKNESS	WELD SIZE A INCHES
8"	(2) 3/4 ø	5/16	3/16
10"	(2) 3/4 ø	5/16	3/16
12" AND 14"	(3) 3/4 ø	5/16	3/16
16"	(4) 3/4 ø	3/8	3/16
18"	(5) 3/4 ø	3/8	1/4
20" AND 21"	(6) 3/4 ø	1/2	1/4
24"	(7) 3/4 ø	1/2	5/16
27"	(8) 3/4 ø	1/2	5/16

IMPORTANT NOTE:

1. FILLET WELD SIZE SHALL BE AS SHOWN UNLESS A GREATER SIZE IS REQUIRED BY A.I.S.C. TABLE J2.4
2. ALL BOLTS ARE 3/4" ø (UNLESS OTHERWISE NOTED) AND ARE TO BE A325N BOLTS.
3. DOUBLE ANGLES MAY BE SUBSTITUTED FOR CONNECTOR PLATES PROVIDED THEY MEET OR EXCEED THE REQUIREMENTS OF THE A.I.S.C.

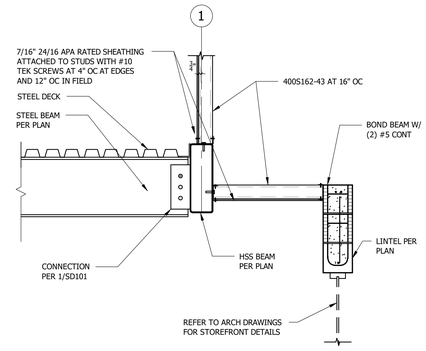

SECTION:		SCALE:
11	WALL SECTION	3/4" =1'-0"
		File Name:

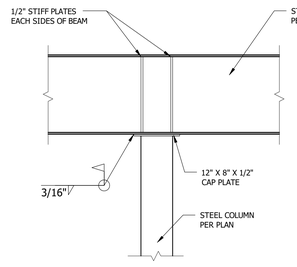

SECTION:		SCALE:
7	BEAM OVER COLUMN DETAIL (TYP.)	3/4"=1'-0"
		File Name:

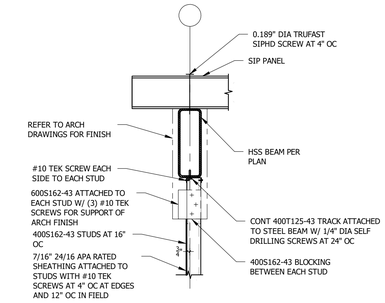

SECTION:		SCALE:
4	ROOF SECTION	3/4" =1'-0"
		File Name:

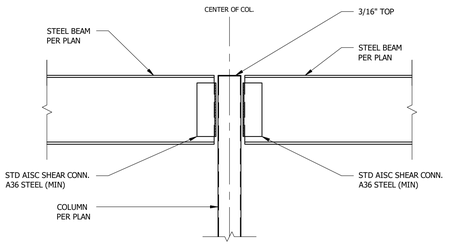

SECTION:		SCALE:
1	BEAM ATTACHMENT TO COLUMN	3/4" =1'-0"
		File Name: FR05

ARCHITECTURE + ENGINEERING
License No. 102538
License No. 26002939
1230 Oakley Seaver Drive, Suite 200 - Clermont, FL 34711
P: 888-850-FFAE (3323)
www.forefrontae.com
FOREFRONT
Service Beyond Design

REVISION:	
0	00/00/00

SEAL

SENIOR CENTER
22174 US HIGHWAY 331 N PAXTON FL 32567
STRUCTURAL DETAILS

ANY DISCREPANCY OR ERROR IN DIMENSIONS OR NOTES SHALL BE BROUGHT TO THE ATTENTION OF THE ARCHITECT/ENGINEER FOR CLARIFICATION PRIOR TO THE COMMENCEMENT OF CONSTRUCTION.

JOB #: 21-17367
DATE: 05/24/24
SD101

J:\Walton County\Jobs\Aging Facility\21-17367-05- Code Update\Dwgs\Sheets\Structural\SD101 STRUCTURAL DETAILS ; Plot Date: Wednesday, May 29, 2024,3:28:32 PM; Plotted By: patriciam

© FOREFRONT ARCHITECTURE & ENGINEERING LLC 2014 THIS DOCUMENT AND/OR THE DESIGN CONCEPTS EXPRESSED HEREIN ARE THE PROPERTY OF FOREFRONT ARCHITECTURE & ENGINEERING LLC AND ALL RIGHTS OF OWNERSHIP, INCLUDING COPYRIGHT OF INTELLECTUAL PROPERTY, ARE RESERVED. ANY REPRODUCTIONS, COPYING OR USE OF THIS DOCUMENT AND/OR THE DESIGN CONCEPT WITHOUT THE WRITTEN CONSENT OF FOREFRONT ARCHITECTURE & ENGINEERING LLC IS STRICTLY PROHIBITED AND PROTECTED BY UNITED STATES AND INTERNATIONAL LAW. IF PRINTED ON 11X17 SCALE IS HALF THE SIZE NOTED.

HVAC SYMBOL LEGEND (ALL SYMBOLS SHOWN ARE NOT NECESSARILY USED ON THE DRAWINGS)

SYMBOL	DESCRIPTION
	–DOOR GRILLE
UC	–UNDERCUT DOOR
	–ACCESS DOORS, VERTICAL OR HORIZONTAL
	–CEILING DIFFUSER, ROUND NECK (CEILING DIFFUSERS ARE 4–WAY THROW UNO)
	–ROUND DIFFUSER
	–CEILING RETURN
	–CEILING EXHAUST
	–CEILING DIFFUSER, RECTANGULAR OR SQUARE NECK (CEILING DIFFUSERS ARE 4–WAY THROW UNO)
	–SUPPLY REGISTER OR GRILLE (VERTICAL MOUNT, SIDEWALL)
	–RETURN/EXHAUST REGISTER OR GRILLE (VERTICAL MOUNT, SIDEWALL)
1	–REVISION REFERENCE
1 / M–1	–DETAIL REFERENCE: TOP–DETAIL#, BOTTOM–DRAWING# SHOWN ON
OS	–OCCUPANCY SENSOR
T	–THERMOSTAT
T	–THERMOSTAT W/REMOTE TEMPERATURE SENSOR
H	–HUMIDISTAT/HUMIDITY SENSOR
T/H	–THERMOSTAT/HUMIDITY
SD	–DUCT SMOKE DETECTOR
	–CONNECT TO EXISTING
	–DEMOLISH TO POINT INDICATED
M	–MOTORIZED CONTROL DAMPER
TS	–TEMPERATURE SENSOR
P	–PRESSURE SENSOR
BD	–BACKDRAFT DAMPER
BBD	–BAROMETRIC BY–PASS DAMPER
0	–NEUTRAL RELATIVE PRESSURE
+	–POSITIVE RELATIVE PRESSURE
–	–NEGATIVE RELATIVE PRESSURE
1	–SHEET NOTE CALLOUT
1	–SHEET NOTE CALLOUT
1	–SHEET NOTE CALLOUT
	–CEILING MOUNTED ACCESS DOOR

SYMBOL	DESCRIPTION
	–FIRE DAMPER (WITH ACCESS PANEL)
	–FIRE & SMOKE DAMPER (WITH ACCESS PANEL)
	–EXISTING FIRE DAMPER TO REMAIN
	–EXISTING FIRE & SMOKE DAMPER TO REMAIN
SA–1	–SOUND ATTENUATOR
M	–MOTOR OPERATED CONTROL DAMPER (MOD)
BBD	–BAROMETRIC BY–PASS DAMPER (BBD)
FM	–AIR FLOW MEASURING STATION
	–MANUAL BALANCING DAMPER
	–STAINLESS STEEL DUCTWORK
	–FLEXIBLE CONNECTION
24X12Ø	–FLAT OVAL DUCT
24X12	–NEW DUCTWORK, FIRST DIMENSION IS SIDE SHOWN
24X12	–EXISTING DUCTWORK TO REMAIN
24x12	–EXISTING DUCTWORK TO BE REMOVED
24x12, DOWN, UP W/IN FLOOR	–DUCT ELBOW, POSITIVE PRESSURE (SUPPLY), FIRST DIMENSION INDICATES SIDE TO WHICH ARROW IS POINTING
	–DUCT ELBOW, EXHAUST
	–DUCT ELBOW, NEGATIVE PRESSURE, RETURN
	–DUCT ELBOW UP THROUGH ROOF OR SLAB ABOVE
	–RECTANGULAR DUCT SECTION UP, POSITIVE PRESSURE, SUPPLY OR OUTSIDE AIR
	–RECTANGULAR DUCT SECTION UP, NEGATIVE PRESSURE, RETURN
	–RECTANGULAR DUCT SECTION UP, EXHAUST
	–ROUND DUCT SECTION UP
	–FLAT OVAL DUCT SECTION UP
	–EXHAUST DUCT UP THROUGH SLAB W/FAN ON ROOF ABOVE
	–EXHAUST FAN ON ROOF W/DUCT DOWN THROUGH ROOF
	–OUTSIDE AIR DUCT UP THROUGH SLAB W/FAN ON ROOF ABOVE
	–OUTSIDE AIR FAN ON ROOF W/DUCT DOWN THROUGH ROOF
	–ROOF RELIEF HOOD WITH CURB SCREEN AND DAMPER.
	–ROOF INTAKE HOOD WITH CURB SCREEN AND DAMPER.

SYMBOL	DESCRIPTION
	–TERMINAL UNIT, VARIABLE/CONSTANT AIR VOLUME
	–TERMINAL UNIT, VARIABLE/CONSTANT AIR VOLUME WITH ELECTRIC HEAT
	–TERMINAL UNIT, VARIABLE/CONSTANT AIR VOLUME, FAN POWERED
	–TERMINAL UNIT, VARIABLE/CONSTANT AIR VOLUME, FAN POWERED, WITH ELECTRIC HEAT
	–ELECTRIC DUCT HEATER (W/ PANEL CLEARANCE)
	–HYDRONIC REHEAT COIL
	–INLINE CENTRIFUGAL FAN
	–PACKAGED TERMINAL AIR CONDITIONER (PTAC)
UP, DN	–CHANGE OF ELEVATION
	–FLEXIBLE DUCT
	–TRANSITION, CONCENTRIC
	–TRANSITION, ECCENTRIC
24x12, 8Ø	–TRANSITION, SQUARE TO ROUND
	–SQUARE THROAT ELBOW W/TURNING VANES
	–RADIUS ELBOW
	–RECTANGULAR/ROUND BRANCH TAKE–OFF OR ROUND/ROUND BRANCH TAKE–OFF
	–SQUARE THROAT TEE
24X12	–RADIUS TEE
24X12	–RECTANGLE–TO–ROUND TAKE–OFF
24X12	–STANDARD BRANCH TAKE–OFF
	–SPIN–IN TAKE–OFF

SYMBOL	DESCRIPTION
	–RESIDENTIAL TYPE CONDENSING UNIT
	–OUTDOOR SINGLE/MULTI ZONE VARIABLE SYSTEM CONDENSING UNIT
	–COMMERCIAL TYPE CONDENSING UNIT
	–RESIDENTIAL AIR HANDLER UNIT
	–COMMERCIAL AIR HANDLER UNIT
	–ROOF TOP UNIT
	– VRF MODULAR CONDENSING UNIT
	– WALL MOUNTED SPLIT INDOOR UNIT
	– CEILING MOUNT CASSETTE SPLIT INDOOR UNIT
	– BELOW CEILING SPLIT INDOOR UNIT
LP	– LOW PRESSURE SPLIT DUCTED INDOOR UNIT
MSP	– MEDIUM PRESSURE SPLIT DUCTED INDOOR UNIT
HSP	– HIGHT PRESSURE SPLIT DUCTED INDOOR UNIT

HVAC ABBREVATIONS

SYMBOL	DESCRIPTION	SYMBOL	DESCRIPTION
AFD	–ADJUSTABLE FREQUENCY DRIVE	LD	–LINEAR DIFFUSER
AFF	–ABOVE FINISHED FLOOR	MBH	–THOUSAND BTUs PER HOUR
AFR	–ABOVE FINISHED ROOF	MCA	–MINIMUM CIRCUIT AMPS
AHU	–AIR HANDLING UNIT	MOCP	–MAXIMUM OVER CURRENT PROTECTION
AP	–ACCESS PANEL	MOD	–MOTOR OPERATED CONTROL DAMPER (MOD)
BOP	–BOTTOM OF PIPE	NC	–NORMALLY CLOSED
BHP	–BRAKE HORSEPOWER	NO	–NORMALLY OPEN
BTU	–BRITISH THERMAL UNIT	NTS	–NOT TO SCALE
h	–CENTER LINE	OA	–OUTSIDE AIR
∮	–CFM (CUBIC FEET PER MINUTE)	OAL	–OUTSIDE AIR LOUVER
CD	–CEILING DIFFUSER	PRV	–PRESSURE REDUCING VALVE
CT	–COOLING TOWER	PRS	–PRESSURE REDUCING STATION
CV	–CONSTANT AIR VOLUME	PSI	–POUNDS PER SQUARE INCH
ΔP	–CHANGE IN PRESSURE	PSIG	–PSI GAUGE
ΔT	–CHANGE IN TEMPERATURE	PTAC	–PACKAGED TERMINAL AIR CONDITIONER
CFM	–CUBIC FEET PER MINUTE	PVC	–POLYVINYL CHLORIDE PIPE
CU	–CONDENSING UNIT	RA	–RETURN AIR
DDC	–DIRECT DIGITAL CONTROLS	RHC	–REHEAT COIL
DN	–DOWN	RHP	–ROOFTOP HEAT PUMP
EAT	–ENTERING AIR TEMPERATURE	RPM	–REVOLUTIONS PER MINUTE
ESP	–EXTERNAL STATIC PRESSURE	RS/L	–REFRIGERANT SUCTION & LIQUID LINES
EWT	–ENTERING WATER TEMPERATURE	RTU	–ROOFTOP AIR HANDLING UNIT
FCU	–FAN COIL UNIT	SA	–SUPPLY AIR
FD	–FIRE DAMPER	SP	–STATIC PRESSURE
FSD	–FIRE SMOKE DAMPER	TSP	–TOTAL STATIC PRESSURE
FF	–FINAL FILTERS	UNO	–UNLESS NOTED OTHERWISE
FLA	–FULL LOAD AMPS	V/PH	–VOLTS/PHASE
FPM	–FEET PER MINUTE	VAV	–VARIABLE AIR VOLUME
GPM	–GALLONS PER MINUTE	VFD	–VARIABLE FREQUENCY DRIVE
KW	–KILOWATT		
LAT	–LEAVING AIR TEMPERATURE		
LWT	–LEAVING WATER TEMPERATURE		

DEMOLITION HVAC ABBREVATIONS

SYMBOL	DESCRIPTION	SYMBOL	DESCRIPTION
EX.	–EXISTING SYSTEM		
EX.–R.	–EXISTING TO REMAIN WITH NO CHANGES		
EX.–T.	–EXISTING TO BE TERMINATED PER PLAN		
EX.–RT.	–EXISTING TO BE RELOCATED PER PLAN		
N.	–NEW SYSTEM		

DRAWING INDEX

SHEET NO.	SHEET TITLE
M100	MECHANICAL LEGENDS, ABBREVIATIONS AND INDEX
M101	MECHANICAL SPECIFICATION
M200	MECHANICAL FLOOR PLAN - DUCTWORK
M201	MECHANICAL FLOOR PLAN - PIPING
M300	MECHANICAL EQUIPMENT SCHEDULE
M400	MECHANICAL DETAILS

SCOPE OF WORK

PROVIDE MECHANICAL SYSTEM DESIGN NEW BUILING WITH ASSEMBLY APPLICATION BASED ON PROPOSED ARCHITECTURAL PLAN AND FBC 8th EDITION 2023.

INGENOTECH CONSULTING ENGINEERS,PLLC HEREBY RESERVES ITS COMMON LAW COPYRIGHTS AND OTHER COPYRIGHTS IN THE PLANS, IDEAS, DETAILS, SPECIFICATIONS AND DESIGNS. THESE IDEAS, DESIGNS, SPECIFICATION, DETAILS AND PLANS ARE NOT TO BE COPIED OR CHANGED IN ANY MANNER OR FORM WHAT–SOEVER, NOR ARE THEY TO BE ASSIGNED TO ANY THIRD PARTY WITHOUT FIRST OBTAINING THE EXPRESS WRITTEN PERMISSION FROM INGENOTECH CONSULTING ENGINEERS,PLLC

HVAC PIPING SYMBOL LEGEND (ALL SYMBOLS SHOWN ARE NOT NECESSARILY USED ON THE DRAWINGS)

SYMBOL	DESCRIPTION
CWS	–CONDENSER WATER SUPPLY
CWR	–CONDENSER WATER RETURN
CHWS	–CHILLED WATER SUPPLY
CHWR	–CHILLED WATER RETURN
CD	–CONDENSATE
CR	–CONDENSATE RETURN
PC	–PUMPED CONDENSATE
HWR	–HOT WATER RETURN
HWS	–HOT WATER SUPPLY
HPS	–HIGH PRESSURE STEAM SUPPLY
MPS	–MEDIUM PRESSURE STEAM SUPPLY
LPS	–LOW PRESSURE STEAM SUPPLY
HPR	–HIGH PRESSURE STEAM RETURN
MPR	–MEDIUM PRESSURE STEAM RETURN
LPR	–LOW PRESSURE STEAM RETURN
RL	–REFRIGERANT LIQUID
RS	–REFRIGERANT SUCTION

SYMBOL	DESCRIPTION
	–FLOW DIRECTION
	–GATE VALVE
	–BALL VALVE
	–CALIBRATING BALANCING VALVE
	–BUTTERFLY VALVE
	–GAS COCK
	–UNION
	–STRAINER
	–CONTROL VALVE
	–SOLENOID VALVE
	–PSI REG.
	–CHECK VALVE
	–FLOW SWITCH
	–SLOPE DIRECTION (DOWN)
	–FLEX CONNECTION

SYMBOL	DESCRIPTION
	–O.S.&Y. GATE VALVE
	–STEAM TRAP
	–THREE–WAY CONTROL VALVE
	–THERMOMETER
EQUIP.	– P–TRAP
	–TWO–WAY CHECK VALVE
MV	–MANUAL VENT
	–PRESSURE GAUGE
	–RELIEF VALVE
FM	–FLOW METER
M	–WATER METER
	–INLINE PUMP
	–INLINE PUMP

SYMBOL	DESCRIPTION
	–VALVE ON RISER
	–CAP
	–CONNECTION, BOTTOM
	–CONNECTION, TOP
	–COUPLING
	–ELBOW, 90°
	–ELBOW, 45°
	–ELBOW, TURNED DOWN
	–ELBOW, TURNED UP
	–TEE, OUTLET DOWN
	–TEE, OUTLET UP
D	–45° PIPE RISE (R) / DROP (D)
	–PIPE ANCHORS
	–CONCENTRIC REDUCER
	–ECCENTRIC REDUCER

NOTE: SOME SYMBOLS SHOWN ON THIS LEGEND MAY NOT PERTAIN TO THIS PROJECT

HVAC EQUIPMENT TAGS

TAG	DESCRIPTION
SIZE – 12"x12",CD / 200 CFM – TAG PER SCHEDULE – CFM	–AIR DISTRIBUTION DEVICE
AHU–1 (AHU NUMBER)	–AIR HANDLING UNIT
EDH–1–1 (AHU NUMBER, HEATER NUMBER)	–ELECTRIC DUCT HEATER

VARIABLE/CONSTANT AIR VOLUME TERMINAL UNITS

TERMINAL UNIT TYPE
VTU – VARIABLE TERMINAL UNIT
CTU – CONSTANT TERMINAL UNIT
PTU – PARALLEL TERMINAL UNIT
STU – SERIES TERMINAL UNIT

VTU–1–1 (AHU NUMBER, TERMINAL NUMBER)

1 / M100 MECHANICAL LEGENDS, ABBREVIATIONS AND INDEX

NOT TO SCALE

Cabral Engineering Inc
Engineering – Consulting – Project Management
1058 Palm Cove Dr, Orlando, FL 32835
(321) 246 – 4041 C.A. No. 33227
CEI Project # 22.63

This item has been electronically signed & sealed by **Farshad Antikchi, PE** on the date and/or time stamp shown using a digital signature. Printed copies of this document are not considered signed &sealed and, the signature must be verified on any electronic copies with Engineer of record.

REVISION

ARCHITECTURE + ENGINEERING
License No. AR98800 License No. CA30900
1230 Oakley Seaver Drive, Suite 200 - Clermont, FL 34711
P: 888-850-FFAE (3323)
www.forefrontae.com
FOREFRONT
Service Beyond Design
FARSHAD ANTIKCHI LICENSE No. 72998 STATE OF FLORIDA PROFESSIONAL ENGINEER
SEAL

AGING FACILITY
22174 US HIGHWAY 331 N PAXTON FL32567
MECHANICAL LEGENDS, ABBREVIATION AND INDEX

PAXTON FLORIDA

ANY DISCREPANCY OR ERROR IN DIMENSIONS OR NOTES SHALL BE BROUGHT TO THE ATTENTION OF THE DESIGN PROFESSIONAL FOR CLARIFICATION PRIOR TO COMMENCEMENT OF CONSTRUCTION.

JOB #: 21-17367
DATE: 07/21/2023
M100

C:\1-ICE- Projects\ICE2023\ICE23053- Senior Center-Francisco\Working MEP\MEP DWGs\1-052824-New Code\ICE23053-Mechanical; Plot Date: Tuesday, May 28, 2024,4:55:44 PM; Plotted By: usmep

© FOREFRONT ARCHITECTURE & ENGINEERING LLC 2014 THIS DOCUMENT AND/OR THE DESIGN CONCEPTS EXPRESSED HEREIN ARE THE PROPERTY OF FOREFRONT ARCHITECTURE & ENGINEERING LLC AND ALL RIGHTS OF OWNERSHIP, INCLUDING COPYRIGHT OF INTELLECTUAL PROPERTY, ARE RESERVED. ANY REPRODUCTIONS, COPYING, OR USE OF THIS DOCUMENT AND/OR THE DESIGN CONCEPT WITHOUT THE WRITTEN CONSENT OF FOREFRONT ARCHITECTURE & ENGINEERING LLC IS STRICTLY PROHIBITED AND PROTECTED BY UNITED STATES AND INTERNATIONAL LAW. IF PRINTED ON 11X17 SCALE IS HALF THE SIZE NOTED.

GENERAL

THE GENERAL MECHANICAL SPECIFICATIONS APPLY TO THE WORK SPECIFIED IN THIS SECTION. PROVIDE ALL LABOR, MATERIALS, SERVICES, EQUIPMENT AND APPLIANCES REQUIRED FOR THE FABRICATION, INSTALLATION, AND/OR RENOVATION OF MECHANICAL SYSTEMS INCLUDING HEATING, VENTILATING, AIR CONDITIONING AND MISCELLANEOUS SYSTEMS AS INDICATED IN INGENOTECH CONSULTING ENGINEERS DESIGN DRAWINGS AND AS OUTLINED IN THESE SPECIFICATIONS.

CONCRETE WORK REQUIRED FOR THE INSTALLATION OR CONSTRUCTION OF ANY OF THE MECHANICAL WORK SPECIFIED HEREIN SHALL CONFORM TO THE REQUIREMENTS OF THE APPLICABLE SECTIONS OF THE SPECIFICATIONS.

SCOPE OF WORK:

FURNISH AND INSTALL COMPLETE AIR CONDITIONING SYSTEMS AS INDICATED ON THE DESIGN DRAWINGS AND AS OUTLINED WITHIN THESE SPECIFICATIONS. WORK SHALL INCLUDE BUT NOT BE LIMITED TO THE FABRICATION AND/OR INSTALLATION OF THE SCHEDULED AIR CONDITIONING UNITS, EXHAUST FANS, AIR DISTRIBUTION AND DUCTWORK.

CLEANING, TESTING AND ADJUSTING:
THE MECHANICAL CONTRACTOR, AT HIS EXPENSE, SHALL CLEAN, REPAIR, ADJUST, CHECK, BALANCE, AND PLACE IN SERVICE THE VARIOUS SYSTEMS HEREIN SPECIFIED WITH THEIR RESPECTIVE EQUIPMENT, ACCESSORIES AND PIPING. HE SHALL FURNISH ALL LABOR, MATERIALS, EQUIPMENT, AND TOOLS REQUIRED TO PERFORM TESTS REQUIRED BY THESE SPECIFICATIONS AND BALANCE PROVIDED BY INGENOTECH AND BY THE GOVERNING AUTHORITIES.

NO WORK SHALL BE COVERED OR CONCEALED UNTIL PROPERLY INSPECTED AND TESTED.

CONTRACTOR SHALL COORDINATE CLEARANCE AROUND UNITS AND EXACT DIMENSIONS OF WALL OPENINGS WITH ARCHITECTURAL AND STRUCTURAL PLAN PRIOR TO CONSTRUCTION AND WITH GENERAL CONTRACTOR DURING CONSTRUCTION.

ALL STRUCTURAL IMPACT TO EXISTING OR PROPOSED BUILDING SHALL BE REVIEWED AND APPROVED BY STRUCTURAL ENGINEER OF RECORD.

TESTING:

ADJUST THE AIR CONDITIONING SYSTEMS, VENTILATING SYSTEMS, FANS, ETC., TO DELIVER NOT LESS THAN THE REQUIRED. AIR QUANTITY WITH QUANTITIES IN EXCESS TO BE SUBJECT TO THE APPROVAL OF THE ENGINEER/INGENOTECH IF FOUND TO NOT HAVE OBJECTIONABLE EFFECTS SUCH AS NOISE, DRAFTS, OR MOTOR OVERLOAD. CONTRACTOR SHALL REVIEW PLANS AND PROVIDE POSITIVE MEANS FOR BALANCING EACH INDIVIDUAL AIR OUTLET AND INLET TO BE ABLE PERFORM TEST AND BALANCE.

PRIOR APPROVAL BY THE ENGINEER/INGENOTECH OF TESTING AND BALANCING CONTRACTOR IS REQUIRED. THIS CONTRACTOR SHALL PROVIDE THREE (3) COPIES OF A TEST AND BALANCE REPORT TO THE ENGINEER AT TIME OF SUBSTANTIAL COMPLETION INSPECTION. THE REPORT SHALL BE PREPARED BY A CONTRACTOR CERTIFIED BY ASSOCIATED AIR BALANCE COUNCIL OR NATIONAL ENVIRONMENTAL BALANCING BUREAU.

THE TEST AND BALANCE REPORT SHALL BE TYPEWRITTEN AND CONTAIN THE FOLLOWING DATA:

1. DATE, TIME, WEATHER, WHEN TEST TAKEN.
2. AIR CAPACITIES AT EACH UNIT INCLUDING OUTSIDE AIR. (ENTERING AND LEAVING DB/WB)
3. STATIC PRESSURE THROUGH UNITS AND UNIT COMPONENTS.
4. MOTOR OPERATING VOLTAGE AND AMPERAGE.
5. DRIVE TYPES, SIZES AND SPEED RANGE.
6. IDENTIFICATION OF ALL AIR TERMINAL DEVICES WITH DESIGN CFM AND ACTUAL CFM.

ADDITIONALLY, SYSTEMS DRAWING CLEARLY MARKED TO IDENTIFY LOCATION OF EQUIPMENT AND AIR DEVICES TESTED SHALL BE PROVIDED ALONG WITH THE WRITTEN TEST AND BALANCE REPORT.

RADON MITIGATION

IF REQUIRED BY OFFICIALS AND OWNER; CONTRACTOR SHALL PERFORM TESTING FOR RADON MITIGATION TO DETERMINED OUTCOME. PROVIDE A RADON MITIGATION SYSTEM CONFORMING TO ASTM E1465-08A, SECTION 6.4. THIS SYSTEM INCLUDE ALL PIPING AND EQUIPMENT. MECHANICAL DRAWINGS DO NOT INCLUDE DETAILS AND EQUIPMENTS FOR RADON MITIGATION. CERTIFIED CONTRACTOR SHALL PROVIDE FULL SYSTEM DRAWINGS AND MATERIALS BASED ON ABOVE STANDARD.

TRAINING SERVICES

THOROUGHLY INSTRUCT THE OWNER'S REPRESENTATIVE IN THE OPERATION OF ALL EQUIPMENT FURNISHED AND LOCATION OF ALL VALVES AND CONTROL DEVICES.

TRAIN BUILDING OWNER'S PERSONNEL DURING NORMAL WORKING HOURS ON STARTUP AND SHUTDOWN PROCEDURES, TROUBLESHOOTING PROCEDURES, SERVICING AND PREVENTATIVE MAINTENANCE SCHEDULE AND PROCEDURES. REVIEW WITH THE OWNER'S PERSONNEL, THE DATA CONTAINED IN THE OPERATING AND MAINTENANCE MANUALS. SCHEDULE TRAINING WITH OWNER, PROVIDE AT LEAST 7-DAYS PRIOR NOTICE TO ARCHITECT/ENGINEER.

ROOF TOP UNITS EQUIPMENTS:

GUARDS SHALL BE PROVIDED IN ACCORDANCE WITH SECTION 304.11 OF FBCM 8th EDITION 2023 WHERE APPLIANCES, EQUIPMENT, FANS OR OTHER COMPONENTS THAT REQUIRE SERVICE AND ROOF HATCH OPENINGS ARE LOCATED WITHIN 10 FEET (3048 MM) OF A ROOF EDGE OR OPEN SIDE OF A WALKING SURFACE AND SUCH EDGE OR OPEN SIDE IS LOCATED MORE THAN 30 INCHES (762 MM) ABOVE THE FLOOR, ROOF OR GRADE BELOW. THE GUARD SHALL EXTEND NOT LESS THAN 30 INCHES (762 MM) BEYOND EACH END OF SUCH APPLIANCES, EQUIPMENT, FANS, COMPONENTS AND ROOF HATCH OPENINGS AND THE TOP OF THE GUARD SHALL BE LOCATED NOT LESS THAN 42 INCHES (1067 MM) ABOVE THE ELEVATED SURFACE ADJACENT TO THE GUARD. THE GUARD SHALL BE CONSTRUCTED SO AS TO PREVENT THE PASSAGE OF A 21-INCH-DIAMETER (533 MM) SPHERE AND SHALL COMPLY WITH THE LOADING REQUIREMENTS FOR GUARDS SPECIFIED IN THE FLORIDA BUILDING CODE, BUILDING.

STRUCTURE SAFETY:

THE BUILDING OR STRUCTURE SHALL NOT BE WEAKENED BY THE INSTALLATION OF MECHANICAL SYSTEMS. WHERE FLOORS WALLS, CEILINGS, OR ANY OTHER PORTION OF THE STRUCTURE ARE ALTERED OR REPLACED IN THE PROCESS OF INSTALLING OR REPAIRING ANY SYSTEM, THE BUILDING OR STRUCTURE SHALL BE LEFT IN A SAFE STRUCTURAL CONDITION IN ACCORDANCE WITH FBC, CHAPTER 16. DOCUMENTS REQUIRED, IT IS THE RESPONSIBILITY OF THE ARCHITECT / CONTRACTOR BY HIRING PROFESSIONAL(S) TO PROVIDE STRUCTURAL FRAMING DETAILS ON NEW, EXISTING OR ALTERED ROOF OPENING WHERE EQUIPMENT OR APPLIANCES IS BEING PLACED PER SECTION FBCM 302.1. INGENOTECH CONSULTING ENGINEERS DETAILS SHALL BE APPROVED BY LICENSED STRUCTURE ENGINEER BEFORE ANY INSTALLATION.

HANGERS AND SUPPORTS

PROVIDE ALL NECESSARY HANGER RODS, CLAMPS AND ATTACHMENTS TO PROPERLY INSTALL AND SUPPORT DUCTWORK, PIPING AND EQUIPMENT FROM THE BUILDING STRUCTURE.

PROVIDE ANY ANGLE IRON OR UNISTRUT AND SUSPENSION RODS REQUIRED TO INSTALL EQUIPMENT, PIPING AND DUCTWORK.

ALL SUPPORTS EXPOSED TO OUTDOORS SHALL BE CLEANED, PRIMED AND PAINTED TO PREVENT RUSTING. FINISH COLOR AS SELECTED BY OWNER.

THE USE OF BALING WIRE OR PERFORATED METAL STRAPPING IS NOT ACCEPTABLE FOR SUPPORTS. CONTACT INGENOTECH CONSULTING ENGINEERS FOR ANY QUESTIONS.

WARRANTY/GUARANTEE:

THE CONTRACTOR SHALL WARRANTY/GUARANTEE AND MAINTAIN THE STABILITY OF WORK AND MATERIALS AND KEEP SAME IN PERFECT REPAIR AND CONDITION FOR THE PERIOD OF ONE (1) YEAR.

DEFECTS OF ANY KIND DUE TO FAULTY WORK OR MATERIALS APPEARING DURING THE ABOVE MENTIONED PERIOD MUST BE IMMEDIATELY MADE GOOD BY THE CONTRACTOR AT HIS OWN EXPENSE TO THE ENTIRE SATISFACTION OF THE OWNER AND ARCHITECT AND ENGINEER. SUCH RECONSTRUCTION AND REPAIRS SHALL INCLUDE ALL DAMAGE TO THE FINISH OR FURNISHING OF THE BUILDING RESULTING FROM THE ORIGINAL DEFECT OR REPAIRS THERE TO.

SUBSTITUTIONS:

EQUIPMENT MODEL NUMBER AND DESIGN OF SYSTEMS INDICATED ON THE INGENOTECH CONSULTING ENGINEERS DRAWINGS AND WITHIN THESE SPECIFICATIONS SHALL BE CONSIDERED AS "STANDARD QUALITY OF MANUFACTURE". EQUAL PRODUCTS, AS APPROVED BY THE ENGINEER, WILL BE ACCEPTABLE FROM OTHER MANUFACTURERS. SUBSTITUTIONS WITHOUT WRITTEN APPROVAL OF THE ENGINEER IS NOT ACCEPTABLE. ALL EQUIPMENT SHALL BE NEW UNLESS OTHERWISE NOTED, FREE OF DEFECTS, AS SHOWN ON THE DRAWINGS OR INDICATED IN SPECIFICATIONS.

INGENOTECH CONSULTING ENGINEERS,PLLC HEREBY RESERVES ITS COMMON LAW COPYRIGHTS AND OTHER COPYRIGHTS IN THE PLANS, IDEAS, DETAILS, SPECIFICATIONS AND DESIGNS. THESE IDEAS, DESIGNS, SPECIFICATION, DETAILS AND PLANS ARE NOT TO BE COPIED OR CHANGED IN ANY MANNER OR FORM WHAT-SOEVER, NOR ARE THEY TO BE ASSIGNED TO ANY THIRD PARTY WITHOUT FIRST OBTAINING THE EXPRESS WRITTEN PERMISSION FROM INGENOTECH CONSULTING ENGINEERS,PLLC

DEVIATIONS FROM SPECIFIED EQUIPMENT AFFECTING ELECTRICAL REQUIREMENTS SHALL BE COORDINATED BETWEEN VENDOR, MECHANICAL CONTRACTOR, AND ELECTRICAL CONTRACTOR PRIOR TO SUBMITTING BIDS. FAILURE TO DO SO WILL NOT BE CAUSE FOR CHANGE OF BID AT A LATER TIME. IN ADDITION, THE MECHANICAL CONTRACTOR SHALL BE FINANCIALLY RESPONSIBLE FOR ANY AND ALL CHANGES TO ENGINEERING PLANS REQUIRED BY AUTHORITY HAVING JURISDICTION.

APPLICABLE CODES/STANDARDS:

- FLORIDA BUILDING CODE 2023- BUILDING (8th EDITION)
- FLORIDA BUILDING CODE 2023- MECHANICAL (8th EDITION)
- FLORIDA BUILDING CODE 2023- PLUMBING (8th EDITION)
- FLORIDA BUILDING CODE 2023- ENERGY CONSERVATION (8th EDITION)
- FLORIDA FIRE PREVENTION CODE (8th EDITION)
- NATIONAL ELECTRIC CODE (2019)
- NFPA LATEST EDITION.
- SMACNA DUCT CONSTRUCTION STANDARDS.
- ASHRAE STANDARD 62.1 (2016)

THE CONTRACTOR SHALL OBTAIN ALL REQUIRED PERMITS, INSPECTIONS AND PAY ALL FEES.

SHOP DRAWINGS AND SUBMITTALS:

SUBMIT SHOP DRAWINGS AND MANUFACTURER'S DATA FOR ALL NEW EQUIPMENT FOR ENGINEER'S APPROVAL PRIOR TO PURCHASE AND/OR FABRICATION. SHOP DRAWINGS FOR EQUIPMENT REQUIRING ELECTRIC POWER OR CONTROL WIRING SHALL INCLUDE COMPLETE WIRING DIAGRAMS.

HVAC CONTRACTORS SHALL SUBMIT COMPLETE DUCTWORK SHOP DRAWINGS FOR REVIEW BY THE ENGINEER. SHOP DRAWINGS SHALL INCLUDE COORDINATION WITH GENERAL CONTRACTOR REGARDING EXACT OPENINGS REQUIRED IN EXTERIOR WALLS. THE DUCTWORK SHOP DRAWINGS WILL ONLY BE REVIEWED FOR COMPLIANCE WITH DRAWINGS AND SPECIFICATIONS. DRAWINGS WILL NOT BE CHECKED FOR COORDINATION WITH OTHER TRADES OR BUILDINGS STRUCTURE. IT IS THE RESPONSIBILITY OF THE CONTRACTORS TO COORDINATE AND VERIFY ROUTING AND EXACT LOCATION OF SYSTEM COMPONENTS.

SYSTEM IDENTIFICATION:

PROVIDE IDENTIFICATION LABELS ON OR NEAR EACH PIECE OF MAJOR EQUIPMENT AND EACH OPERATION DEVICE AND DISCONNECT. LABELS SHALL BE CONSTRUCTED OF ENGRAVED PLASTIC LAMINATE SIGN OR PLASTIC EQUIPMENT MARKER PERMANENTLY SECURED TO EQUIPMENT. LETTERING SHALL BE A MINIMUM OF 1/2 INCH HIGH FOR EQUIPMENT NAME AND 3/8 INCH HIGH FOR EQUIPMENT INFORMATION.

VALVES SHALL BE TAGGED USING PLASTIC LAMINATE TAGS SECURED WITH BRASS CHAINS INDICATING THE VALVE SIZE, SERVICE AND FUNCTION.

INGENOTECH CONSULTING ENGINEERS,PLLC HEREBY RESERVES ITS COMMON LAW COPYRIGHTS AND OTHER COPYRIGHTS IN THE PLANS, IDEAS, DETAILS, SPECIFICATIONS AND DESIGNS. THESE IDEAS, DESIGNS, SPECIFICATION, DETAILS AND PLANS ARE NOT TO BE COPIED OR CHANGED IN ANY MANNER OR FORM WHAT-SOEVER, NOR ARE THEY TO BE ASSIGNED TO ANY THIRD PARTY WITHOUT FIRST OBTAINING THE EXPRESS WRITTEN PERMISSION FROM INGENOTECH CONSULTING ENGINEERS,PLLC

EXECUTION:

ALL LOCATIONS OF EQUIPMENT, DUCTWORK, PIPING, ETC., INDICATED ON THE DRAWINGS IS DIAGRAMMATIC AND SHALL BE FOLLOWED AS CLOSELY AS POSSIBLE TO THE PLANS SUBJECT TO BUILDING CONSTRUCTION AND INTERFERENCES WITH OTHER TRADES. CONTRACTOR IS RESPONSIBLE FOR ANY FIELD MEASUREMENTS REQUIRED TO PROVIDE AN APPROVED AND FUNCTIONAL INSTALLATION.

COORDINATE WITH OTHER TRADES AND FIELD-VERIFY EXISTING CONDITIONS FOR EXACT LOCATION AND ROUTING OF SYSTEMS. PROVIDE OFFSETS, TRANSITIONS AND ADAPTORS AS REQUIRED.

NOT ALL COMPONENTS REQUIRED FOR A COMPLETE INSTALLATION ARE SHOWN ON THESE DRAWINGS. REFER TO EQUIPMENT INSTALLATION INSTRUCTION, SCHEDULES AND APPLICABLE CODES FOR ADDITIONAL INFORMATION, INCLUDING REQUIRED CONNECTION LOCATIONS, TYPES AND SIZES.

PERFORM ALL WORK NECESSARY TO PREPARE THE STRUCTURE FOR THE INSTALLATION OF THE WORK. ALL HOLES, OPENINGS AND DAMAGED MATERIALS CREATED DURING CONSTRUCTION SHALL BE REPAIRED. ALL PENETRATIONS SHALL BE SLEEVED AND SEALED SO AS TO BE WATER AND AIR TIGHT.

PIPING:

CONDENSATE DRAINS:

CONDENSATE PIPE TO BE TYPE L COPPER OR SCHEDULE 40 PVC. ROUTE AS INDICATED ON PLANS. COORDINATE WITH PLUMBER TO PROVIDE HUB DRAIN(S) IN MECHANICAL ROOM AND DRYWELL(S). HVAC CONTRACTOR TO PROVIDE P-TRAP AT UNIT SIZED FOR 2" GREATER THAN UNIT STATIC PRESSURE. PROVIDE CLEANOUT AT UNIT FOR SUSPENDED HORIZONTAL AIR HANDLERS. INSULATE CONDENSATE PIPE WITH 1/2" ARMAFLEX (OR EQUAL) INSULATION RATED FOR PLENUM APPLICATION COMPLY WITH SECTION 602 FBCM 8th EDOTION(2023). CONDENSATE DRAIN LINE SHALL BE NOT LESS THAN THE EQUIPMENT DRAIN LINE SIZE AND IN NO CASE LESS THAN 1" PIPE SIZE. DRAIN LINE SHALL SLOPE A MINIMUM OF 1/8" PER FOOT TOWARDS DRAIN. TERMINATION POINT SHALL BE COMPLY WITH FBCM 8th EDITION(2023) SECTION 307.2.1. CONTACT INGENOTECH FOR ANY QUESTIONS.

REFRIGERANT PIPING:
PIPING SHALL BE SEAMLESS MULLER STREAMLINE TYPE ACR(HARD OR ANNEALED), (STRAIGHT LENGTH OR COIL) COMPLY WITH ASTM B 280. WHERE APPROVED, COPPER TUBE FOR REFRIGERANT PIPING ERECTED ON THE PREMISES SHALL BE SEAMLESS COPPER TUBE OF TYPE K, L, OR M (DRAWN OR ANNEALED), (STRAIGHT LENGTH OR COIL) IN ACCORDANCE WITH ASTM B 88. ANNEALED TEMPERED COPPER TUBE SHALL NOT BE USED IN SIZES LARGER THAN A 2 INCH NOMINAL SIZE. FITTINGS SHALL BE MUELLER OR NIBCO WROUGHT COPPER LONG RADIUS REFRIGERATION TYPE.

WORKMANSHIP ON THESE SYSTEMS MUST BE GOOD, AND CLEANLINESS OF PIPING SYSTEMS IS MANDATORY. WORK THAT DOES NOT MEET THESE CRITERIA SHALL BE REMOVED AND REPLACED AT NO COST TO THE OWNER. THE ENGINEER SHALL DETERMINE WHETHER THE WORK MEETS THESE CRITERIA.

COVER ALL EXPOSED LIQUID LINES AND ALL SUCTION PIPING (INDOORS AND OUTDOORS), FITTINGS, VALVES, ETC., CONTINUOUS THROUGH SLEEVES, HANGERS, ETC., WITH 3/4" FR/ARMAFLEX. INSTALLATION SHALL BE CONDENSATION FREE AND INSTALLED ACCORDING TO MANUFACTURER'S RECOMMENDATIONS. PAINT ALL INSULATION EXPOSED TO OUTDOORS WITH UV PROTECTIVE PAINT PER MANUFACTURERS RECOMMENDATIONS.

REFRIGERANT PIPING BELOW GRADE SHALL BE ROUTED THROUGH MINIMUM 4" DIAMETER PVC PIPE SLEEVES TO EACH CONDENSING UNIT. ALL UNDERGROUND REFRIGERANT PIPING SHALL BE CONTINUOUS SOFT DRAWN TUBING WITH NO UNDERGROUND JOINTS ALLOWED. REFRIGERANT PIPE SIZES SHALL BE SIZED PER MANUFACTURER'S RECOMMENDATION BASED ON LENGTH OF RUN BETWEEN CONDENSING UNITS AND AHU'S.

PIPING ROUTED ALONG BUILDING EXTERIOR WALL SHALL BE PROTECTED BY SHEET METAL HOUSING SECURELY ATTACHED TO WALL AT 8'-0" INTERVALS AND PAINTED TO MATCH BUILDING EXTERIOR.

TRAP OIL IN SUCTION LINE AT EVAPORATOR COIL. NO OTHER COIL TRAPS PERMITTED. PROVIDE SUCTION RISERS, CHECK VALVES, SOLENOID VALVES, OR OTHER DEVICES REQUIRED IN PIPING SYSTEM BY MANUFACTURER'S INSTALLATION INSTRUCTIONS.

FURNISH ALL LABOR AND MATERIALS TO REPLACE REFRIGERANT LOST DURING THE ONE YEAR WARRANTY PERIOD. CONTACT FARSHAD ANTIKCHI AS EOR FOR ANY QUESTIONS.

REFRIGERATION INSULATION SPECIFICATION:

1- INSULATION SHALL BE A FLEXIBLE, CLOSED-CELL ELASTOMERIC PIPE INSULATION:
AP ARMAFLEX, AC ACCOFLEX. ADHESIVE SHALL BE ARMAFLEX 520, 520 BLACK OR 520 BLV ADHESIVE. THE INSULATION MUST CONFORM TO ASTM C534 GRADE 1, TYPE I.
2- INSULATION MATERIALS SHALL HAVE A CLOSED CELL STRUCTURE TO PREVENT MOISTURE FROM WICKING WHICH MAKES IT AN EFFICIENT INSULATION.
3- INSULATION MATERIALS SHALL BE MANUFACTURED WITHOUT THE USE OF CFC'S, HFC'S OR HCFC'S. IT IS ALSO FORMALDEHYDE FREE, LOW VOCS, FIBER FREE, DUST FREE AND RESISTS MOLD AND MILDEW.
4- INSULATION MATERIALS SHALL HAVE A FLAME-SPREAD INDEX OF LESS THAN 25 AND A SMOKE-DEVELOPED INDEX OF LESS THAN 50 AS TESTED IN ACCORDANCE WITH ASTM E 84. IN ADDITION, THE PRODUCTS, WHEN TESTED, SHALL NOT MELT OR DRIP FLAMING PARTICLES, AND THE FLAME SHALL NOT BE PROGRESSIVE.
5- INSULATION MATERIALS SHALL HAVE A MAXIMUM THERMAL CONDUCTIVITY OF 0.27 BTU-IN./H-FT2-°F AT A 75°F MEAN TEMPERATURE AS TESTED IN ACCORDANCE WITH ASTM C 177 OR ASTM C 518.
6- INSULATION MATERIALS SHALL HAVE A MAXIMUM WATER VAPOR TRANSMISSION OF 0.08 PERM-INCHES WHEN TESTED IN ACCORDANCE WITH ASTM E 96, PROCEDURE A.
7- ALL LIQUID AND SUCTION LINES SHALL BE INSULATED CONTINUOUSLY FROM A POINT 6" INSIDE THE DISPLAY CASE TO THE SUCTION SERVICE VALVE AT THE COMPRESSOR.
8- ALL INSULATION MATERIAL AND CONDUCTIVITY AND THICKNESS SHALL COMPLY WITH SECTION C403.2.10 FBCEC(8th EDITION).

PIPE HANGERS AND SUPPORTS:
PIPE HANGERS, WHERE NEEDED, SHALL BE GRINNEL #260 CLEVIS TYPE, 5'-0" ON CENTER, SECURELY ATTACHED TO BUILDING CONSTRUCTION. SPACE AT MIN. 5'-0" INTERVALS.

INGENOTECH CONSULTING ENGINEERS,PLLC HEREBY RESERVES ITS COMMON LAW COPYRIGHTS AND OTHER COPYRIGHTS IN THE PLANS, IDEAS, DETAILS, SPECIFICATIONS AND DESIGNS. THESE IDEAS, DESIGNS, SPECIFICATION, DETAILS AND PLANS ARE NOT TO BE COPIED OR CHANGED IN ANY MANNER OR FORM WHAT-SOEVER, NOR ARE THEY TO BE ASSIGNED TO ANY THIRD PARTY WITHOUT FIRST OBTAINING THE EXPRESS WRITTEN PERMISSION FROM INGENOTECH CONSULTING ENGINEERS,PLLC

PIPE SUPPORT:
ATTACH LINES SECURELY ALONG PAD/FLOOR/EQUIPMENT/STRUCTURE TO PREVENT MOVEMENT. SUPPORT IN A MANNER THAT LINES DO NOT HANG FROM EVAPORATOR CONNECTIONS OR BLOCK ACCESS TO FILTERS, CONTROLS, ETC.

PIPE SUPPORTS SHALL BE IN ACCORDANCE TO TABLE 305.4 OF 8th EDITION FBCM 2023.

VIBRATION ISOLATION:

ALL BLOWER UNITS AND VIBRATING TYPE EQUIPMENT SHALL BE PROPERLY FITTED WITH MASON INDUSTRIES VIBRATION ISOLATION EQUIPMENT SIZED IN ACCORDANCE WITH EQUIPMENT WEIGHT AND DUTY.

PROVIDE FLEXIBLE CONNECTORS AT ALL SUPPLY AND RETURN CONNECTIONS TO AIR HANDLING EQUIPMENT CONSISTING OF HEAVY CANVAS OR NEOPRENE FABRIC WITH AIRTIGHT SEAMS AND CONNECTIONS TO THE EQUIPMENT.

AIR FILTERS:

FILTERS SHALL BE 2" FIBERGLASS MEDIA EQUAL TO MERV-13, THROW AWAY TYPE IN A RIGID FRAME WITH A SUPPORTING MAZE ACROSS BOTH ENTERING AND LEAVING SURFACES. SUPPLY ONE COMPLETE SET OF FILTERS AFTER OWNER'S FINAL ACCEPTANCE. FARR 30/30 OR EQUAL.

DUCTWORK:

ALL DIMENSIONS ARE INSIDE NET FREE AREA. SEE FLOOR PLAN FOR SPECIFIED MATERIAL,

MATERIALS: (OPTION A FOR FIBROUS BOARD OR OPTION B FOR METAL DUCT SPECIFIED WITH KEY NOTE IN PLAN). CONTACT INGENOTECH CONSULTING ENGINEERS FOR ANY QUESTIONS ON MATERIAL.
A. LOW PRESSURE SUPPLY AND RETURN DUCTWORK SPECIFIED ON I.C.E. PLANS SHALL BE FIBERBOARD EQUAL TO MANSVILLE FR-800 (SUPERDUCT). PROVIDE MINIMUM "R" VALUE OF 4.2 FOR DUCTS INSTALLED IN CONDITIONED SPACE AND 6.0 FOR DUCT INSTALLED IN UNCONDITIONED SPACE. DUCTWORK SHALL BE LINED WITH ANTI MICROBIAL COATING. SEAL ALL JOINTS WITH GLASS FABRIC AND MASTIC. TAPE ALONE IS NOT ALLOWED.

B. SUPPLY AND RETURN DUCTWORK, OUTSIDE AIR AND EXHAUST DUCTS OR DUCTWORK SPECIFIED ON I.C.E. PLANS SHALL BE GALVANIZED SHEET METAL PER SMACNA STANDARD AND DETAILS . SEAL ALL JOINTS WITH GLASS FABRIC AND MASTIC. TAPE ALONE IS NOT ALLOWED.

WET EXHAUST DUCTS SHALL BE ALUMINUM OR STAINLESS STEEL SHEET METAL.

ADJUSTABLE SPLITTERS AND DAMPERS SHALL BE INSTALLED IN EVERY SPLIT AND BRANCH DUCT AND SHALL BE PROVIDED WITH LOCKING QUADRANTS ON EXPOSED OR IN ACCESSIBLE AREAS OF THE DUCT FOR EASE OF OPERATION. ACCESS PANELS OR YOUNG REGULATORS SHALL BE PROVIDED WHERE DAMPERS ARE INSTALLED ABOVE HARD CEILINGS OR IN SOFFITS.

ELBOWS OR CHANGES IN DUCT DIRECTION GREATER THAN 45 DEGREES SHALL BE FITTED WITH AIR TURNS CONSISTING OF CURVED AIRFOIL BLADES OR VANES WHICH WILL PERMIT THE AIR TO MAKE ABRUPT TURNS WITHOUT APPRECIABLE TURBULENCE.

FLEXIBLE DUCTWORK SHALL BE ACOUSTICAL HIGH PRESSURE TYPE. INTERIOR LINER SHALL BE TRILAMINATE OF ALUMINUM FOIL, FIBERGLASS AND ALUMINUM POLYESTER, MECHANICALLY LOCKED TO CORROSIVE RESISTANCE GALVANIZED STEEL DUCT HELIX. FIBERGLASS INSULATION WITH AN R-VALUE OF 6.0 OR GREATER, AND COPOLYMER SEAMLESS OUTSIDE VAPOR BARRIER SLEEVE. THE ENTIRE FLEXIBLE DUCT ASSEMBLY SHALL BE LISTED IN ACCORDANCE WITH UL-181 CLASS 1 AIR DUCT MATERIAL. THE MAXIMUM LENGTH OF ANY FLEX DUCT SHALL BE 14'-0". FLEXIBLE DUCTWORK SHALL MEET THE FLORIDA MODEL ENERGY EFFICIENCY CODE. ALL JOINTS AT CONNECTIONS TO DIFFUSERS AND DUCTWORK SHALL BE SEALED WITH GLASS FABRIC AND MASTIC.

INSTALL DUCTWORK INDICATED ON INGENOTECH CONSULTING ENGINEERS DRAWINGS, MAKING NECESSARY CHANGES IN CROSS-SECTIONS AND OFFSETS, WHETHER OR NOT SPECIFICALLY INDICATED.

SPIRAL DUCTWORK SHALL BE SIMILAR TO "SEMCO" MODEL SL(85)P LOW PRESSURE.

PROVIDE U.L.LISTED FIRE,SMOKE OR COMBINATION FIRE SMOKE DAMPER IN ALL PENETRATIONS OF RATED SURFACES PER SECTION 607 FBCM 8th EDITION 2023 AND IN ACCORDANCE WITH THE MANUFACTURER'S WRITTEN INSTRUCTIONS AND THE U.L. LISTING REQUIREMENTS. INTERLOCK THE UNIT WITH FIRE ALARM SYSTEM.

INSULATION:

SHALL BE AS MANUFACTURED BY CERTAINTEED, OWENS-CORNING, MANVILLE, PITTSBURGH CORNING, ARMSTRONG, OR APPROVED EQUAL. INSULATION SUNDRIES AND ADHESIVES SHALL BE AS MANUFACTURED BY BENJAMIN FOSTER, CHILDERS, VIMASCO, OR APPROVED EQUAL. ALL INSULATION SHALL BE SUITABLE FOR INSTALLATION IN A RETURN AIR PLENUM.

INSULATE ALL SHEETMETAL DUCTWORK INCLUDING EXHAUST DUCTWORK EXTERNALLY WITH MANVILLE R SERIES MICROLITE TYPE 75 OR 100 INSULATION OR APPROVED. INSULATION TO HAVE TYPE II FSK FACING AND UL FIRE HAZARD CLASSIFICATION OF FLAME SPREAD 25/SMOKE DEVELOPED 50/FUEL CONTRIBUTED 50. INSTALL INSULATION PER SMACNA, FLORIDA MODEL ENERGY EFFICIENCY CODE AND MANUFACTURER'S RECOMMENDATIONS. ALL INSULATION JOINTS SHALL BE SEALED WITH GLASS FABRIC AND MASTIC.
MINIMUM INSULATION REQUIREMENTS AS FOLLOWS:
- SUPPLY AND RETURN AIR UNCONDITIONED: 2" (R-4.2 MIN)
- OUTSIDE AND EXHAUST AIR: 2" (R-6 MIN)

PROVIDE ALL EXTERIOR INSULATION DUCTWORK OR PIPING EXPOSED TO THE OUTDOORS WITH A MINIMUM 8 MIL THICK ALUMINUM OR PVC JACKET.
CONTRACTOR SHALL BE RESPONSIBLE FOR FURNISHING AND INSTALLING ADEQUATE AND PROPER INSULATION AND MOISTURE-SEAL IN A MANNER THAT WILL PERMANENTLY PREVENT THE ACCUMULATION OF ANY OBJECTIONABLE MOISTURE ON THE EXTERIOR OF AIR CONDITIONING UNITS, REFRIGERANT PIPING, CONDENSATE DRAIN PIPING, AIR DUCTS OR OTHER PARTS OF THE SYSTEM. CONTRACTOR SHALL CORRECT THE CAUSE OF ANY CONDENSATION AND FULLY REPAIR, WITHOUT COST TO THE OWNER, ANY DAMAGES TO BUILDING SURFACES, FURNISHINGS OR EQUIPMENT CAUSED BY CONDENSATION FROM THIS SYSTEM, FOR THE FULL PERIOD OF GUARANTEE. COORDINATE WITH INGENOTECH CONSULTING ENGINEERS FOR ANY UNCLEAR NOTE OR SPECIFICATION.

INSULATION PROTECTION

PER FBCEC SECTION C403.2.9.1.2 8th EDITION 2023 INSULATION SHALL BE PROTECTED FROM DAMAGE, INCLUDING THAT DUE TO SUNLIGHT, MOISTURE, EQUIPMENT MAINTENANCE AND WIND, BUT NOT LIMITED TO THE FOLLOWING:

1. INSULATION EXPOSED TO WEATHER SHALL BE SUITABLE FOR OUTDOOR SERVICE, E.G., PROTECTED BY ALUMINUM, SHEET METAL, PAINTED CANVAS OR PLASTIC COVER. CELLULAR FOAM INSULATION SHALL BE PROTECTED AS ABOVE OR PAINTED WITH A COATING THAT IS WATER RETARDANT AND PROVIDES SHIELDING FROM SOLAR RADIATION THAT CAN CAUSE DEGRADATION OF THE MATERIAL.

2. INSULATION COVERING COOLING DUCTS LOCATED OUTSIDE THE CONDITIONED SPACE SHALL INCLUDE A VAPOR RETARDANT LOCATED OUTSIDE THE INSULATION (UNLESS THE INSULATION IS INHERENTLY VAPOR RETARDANT), ALL PENETRATIONS AND JOINTS OF WHICH SHALL BE SEALED.

CONTROLS:

1. FACTORY MOUNTED CONTROL SHALL BE PROVIDED TO ACCOMPLISH THE SEQUENCE OF OPERATION. ALL INTERIOR CONTROLS SHALL BE FACTORY FURNISHED AND INSTALLED.

2. PROVIDE ALL 24 VOLT WIRING BETWEEN CONTROL DEVICES AS NECESSARY TO MAKE COMPLETE AND OPERATION SYSTEM. PROVIDE 110/24 VAC TRANSFORMERS AS REQUIRED. COORDINATE WITH DIVISION 16 FOR 120V POWER ROUGH-IN, CONTROL, POWER AND WIRING. 24 VOLT WIRING SHALL BE PLENUM RATED CABLE.

3. ALL THERMOSTATS SHALL BE MOUNTED 4'-0" ABOVE FINISHED FLOOR.

4. DISCONNECT SWITCHES REQUIRED FOR THE MECHANICAL EQUIPMENT SHALL BE PROVIDED BY DIVISION 16 ELECTRICAL.

5. ALL CONTROL WIRING, CONDUIT AND HARDWARE TO COMPLETE THE H.V.A.C. CONTROL SYSTEMS SHALL BE FURNISHED AND INSTALLED UNDER DIVISION 15.

AIR CONDITIONING UNITS (DX SPLIT):

UNITS SHALL BE SPLIT SYSTEM AIR-TO-AIR ELECTRIC AIR CONDITIONING UNITS AND HEAT PUMPS AS SCHEDULED ON DRAWINGS. UNITS WITH INTEGRAL ELECTRIC RESISTANCE HEATERS SHALL HAVE A SINGLE-POINT ELECTRIC CONNECTION.

TOTAL COOLING CAPACITY OF THE UNITS SHALL BE AS SCHEDULED ON DRAWINGS. UNIT CABINET SHALL BE CONSTRUCTED OF GALVANIZED STEEL, BONDED AND COATED WITH BAKED ENAMEL. CABINET INSULATION SHALL COMPLY WITH FLORIDA ENERGY CODE. PROVIDE E-COAT PROTECTION FOR COILS OR ANY ALTERNATIVE F

MECHANICAL REFERENCE NOTES

1. DUCTWORK SHALL BE FIBROUS BOARD DUCT. SEE PAGE M101 OPTION "A" DUCTWORK FOR SPECIFICATIONS.
2. CONTRACTOR SHALL PROVIDE RUST RESISTANCE MATERIAL FOR ALL EXPOSED METAL SUPPORT AND RODS. ALL METAL SURFACE ON DUCT SYSTEM SHALL BE INSULATED, SEE SPECIFICATION.
3. COORDINATE DIFFUSER GRILL AND LOUVER'S HEIGHT ON THE WALLS WITH ARCHITECT BEFORE ANY INSTALLATION.
4. ALL MATERIAL SHALL BE PLENUM RATED.
5. PROVIDE FULL LOUVER DOOR.
6. RELIEF AIR GRILL. BAROMETRIC DAMPER SHALL BE ADJUSTED WITH GRAVITY WEIGHT TO BALANCE FOR 700 CFM OR 0.1 IN.WG EQUAL 25 PASCAL PRESSURE. DAMPER IS NORMALLY CLOSED WHEN THERE IS NO PRESSURE DIFFERENCE.

BRANCH DUCT SIZE CHART

CFM	SUPPLY BRANCH DUCT SIZE(ø")	RETURN BRANCH DUCT SIZE(ø")
0–100	7	8
101–150	8	10
151–250	8	10
251–380	10	12
381–550	12	14
551–750	14	16
751–950	14	16
951–1200	16	18
1201–1400	16	18
1401–1600	18	20
1601–1800	18	20

DUCT FABRIC SHALL BE TRILAMINATE OF ALUMINUM FOIL, FIBERGLASS AND ALUMINUM POLYESTER, MECHANICALLY LOCKED TO CORROSIVE RESISTANCE GALVANIZED STEEL DUCT HELIX. EQAL FLEX-MASTER 3M.

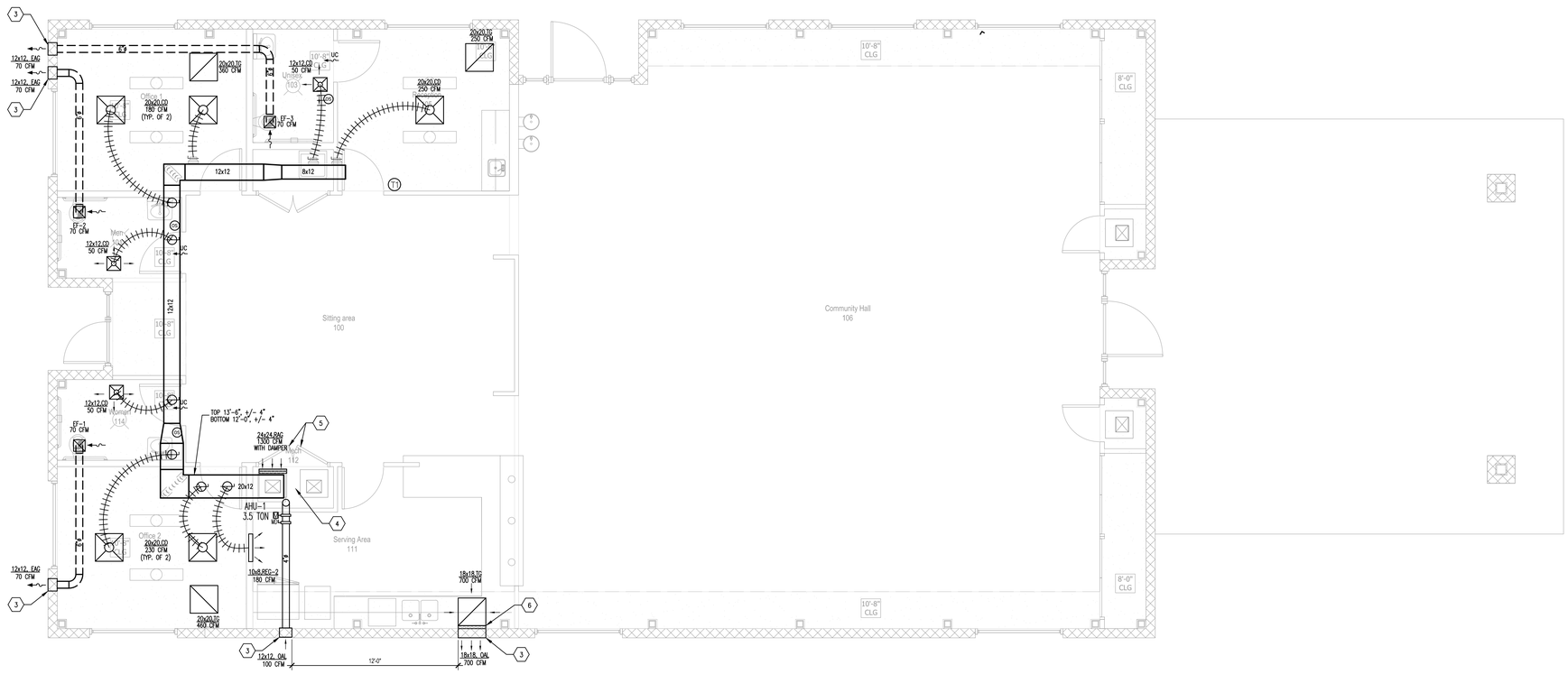

1 M200 MECHANICAL FLOOR PLAN – DUCTWORK

SCALE: 1/4"=1'-0"

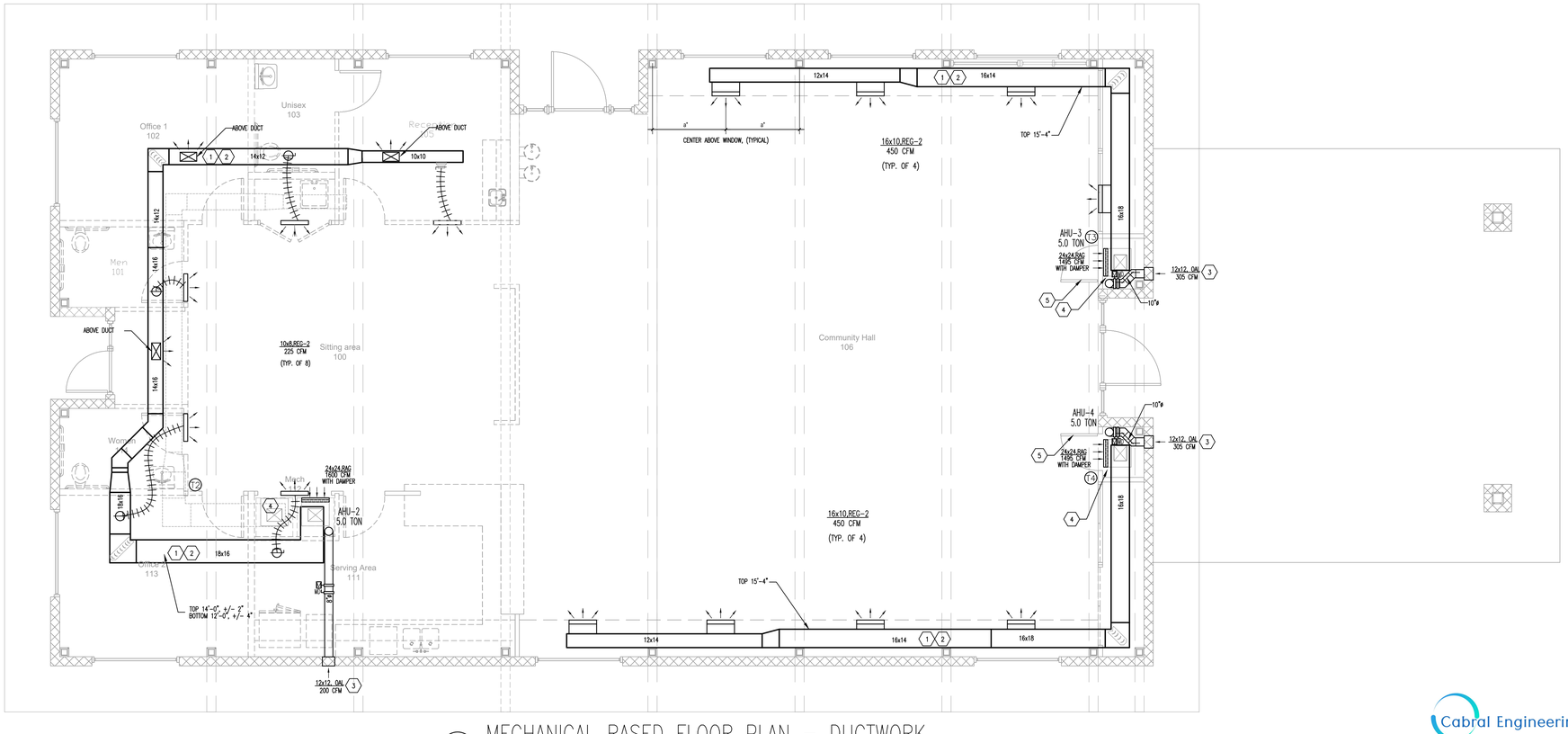

2 M200 MECHANICAL RASED FLOOR PLAN – DUCTWORK

SCALE: 1/4"=1'-0"

Cabral Engineering Inc
Engineering – Consulting – Project Management
1058 Palm Cove Dr, Orlando, FL 32835
(321) 246 – 4041 C.A. No. 33227
CEI Project # 22.63

REVISION

ARCHITECTURE + ENGINEERING
License No. AR98800 License No. CA30990
1230 Oakley Seaver Drive, Suite 200 - Clermont, FL 34711
P: 888-850-FFAE (3323)
www.forefrontae.com
FOREFRONT
Service Beyond Design

This item has been electronically signed & sealed by **Farshad Ashkchi, PE** on the date and/or time stamp shown using a digital signature. Printed copies of this document are not considered signed &sealed and, the signature must be verified on any electronic copies with Engineer of record.

FARSHAD ASHKCHI PE No. 72998 STATE OF FLORIDA PROFESSIONAL ENGINEER

AGING FACILITY

22174 US HIGHWAY 331 N PAXTON FL32567

MECHANICAL FLOOR PLAN - DUCT WORK

ANY DISCREPANCY OR ERROR IN DIMENSIONS OR NOTES SHALL BE BROUGHT TO THE ATTENTION OF THE ENGINEER BEFORE ANY CLASSIFICATION PRIOR TO THE COMMENCEMENT OF CONSTRUCTION.

JOB #: 21-17267
DATE: 07/21/2023

M200

C:\1- ICE- Projects\22\2027\DCE2353- Senior Center-Francisco\Working MEP\MEP DWGs\1-052824-New Code\DCE2353-Mechanical. Plot Date: Tuesday, May 28, 2024,4:55:47 PM, Plotted By: usmep

© FOREFRONT ARCHITECTURE & ENGINEERING LLC 2014 THIS DOCUMENT AND/OR THE DESIGN CONCEPTS EXPRESSED HEREIN ARE THE PROPERTY OF FOREFRONT ARCHITECTURE & ENGINEERING LLC AND ALL RIGHTS OF OWNERSHIP, INCLUDING COPYRIGHT OF INTELLECTUAL PROPERTY, ARE RESERVED. ANY REPRODUCTIONS, COPYING, OR USE OF THIS DOCUMENT AND/OR THE DESIGN CONCEPT WITHOUT THE WRITTEN CONSENT OF FOREFRONT ARCHITECTURE & ENGINEERING LLC IS STRICTLY PROHIBITED AND PROTECTED BY UNITED STATES AND INTERNATIONAL LAW. IF PRINTED ON 11X17 SCALE IS HALF THE SIZE NOTED.

MECHANICAL REFERENCE NOTES

1. CONDENSATE DRAIN LINE SHALL BE NOT LESS THAN THE EQUIPMENT DRAIN LINE SIZE AND IN NO CASE LESS THAN 1" PIPE SIZE. DRAIN LINE SHALL SLOPE A MINIMUM OF 1/8" PER FOOT TOWARDS DRAIN. TERMINATION POINT SHALL BE COMPLY WITH FBCM 8th EDITION(2023) SECTION 307.2.1.

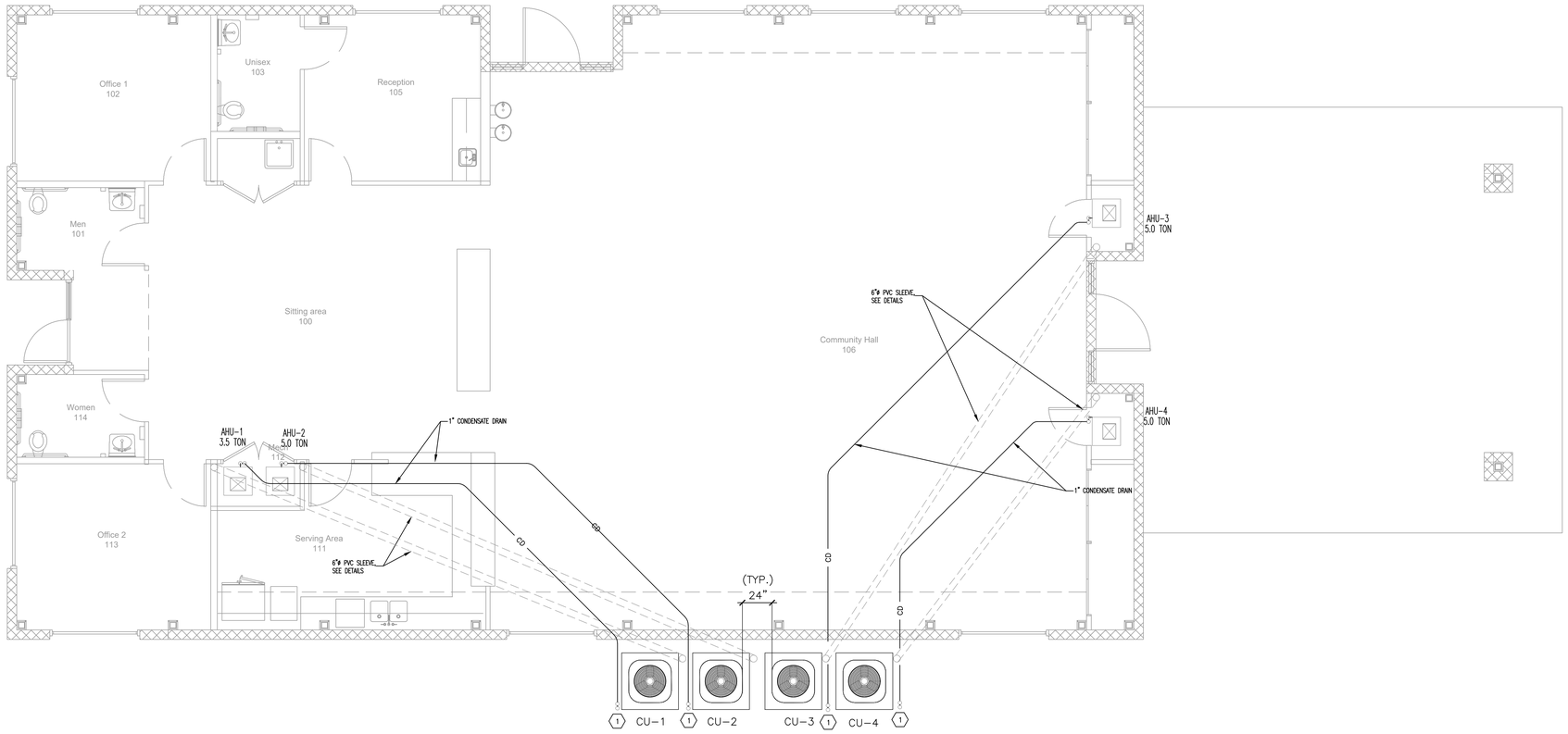

1 M201 MECHANICAL FLOOR PLAN – PIPING

SCALE: 1/4"=1'-0"

This item has been electronically signed & sealed by **Farshad Ankhchi, PE** on the date and/or time stamp shown using a digital signature. Printed copies of this document are not considered signed &sealed and, the signature must be verified on any electronic copies with Engineer of record.

REVISION

ARCHITECTURE + ENGINEERING
License No. AR98890 License No. CA30900
1230 Oakley Seaver Drive, Suite 200 - Clermont, FL 34711
P: 888-850-FFAE (3323)
www.forefrontae.com
FOREFRONT
Service Beyond Design

FARSHAD ANKHCHI
STATE OF FLORIDA
No. 72998
PROFESSIONAL ENGINEER
07/17/2025

FL32567

AGING FACILITY

22174 US HIGHWAY 331 N PAXTON FL32567

MECHANICAL FLOOR PLAN - PIPING

Cabral Engineering Inc
Engineering – Consulting – Project Management
1058 Palm Cove Dr, Orlando, FL 32835
(321) 246 – 4041 C.A. No. 33227
CEI Project # 22.63

ANY DISCREPANCY OR ERROR IN DIMENSIONS OR NOTES SHALL BE BROUGHT TO THE ATTENTION OF THE ENGINEER OF RECORD FOR CLARIFICATION PRIOR TO COMMENCEMENT OF CONSTRUCTION.

JOB #: 21-17-557
DATE: 07/17/2025

M201

© FOREFRONT ARCHITECTURE & ENGINEERING LLC 2014 THIS DOCUMENT AND/OR THE DESIGN CONCEPTS EXPRESSED HEREIN ARE THE PROPERTY OF FOREFRONT ARCHITECTURE & ENGINEERING LLC AND ALL RIGHTS OF OWNERSHIP, INCLUDING COPYRIGHT OF INTELLECTUAL PROPERTY, ARE RESERVED. ANY REPRODUCTIONS, COPYING, OR USE OF THIS DOCUMENT AND/OR THE DESIGN CONCEPT WITHOUT THE WRITTEN CONSENT OF FOREFRONT ARCHITECTURE & ENGINEERING LLC IS STRICTLY PROHIBITED AND PROTECTED BY UNITED STATES AND INTERNATIONAL LAW. IF PRINTED ON 11X17 SCALE IS HALF THE SIZE NOTED.

AIR HANDLING + CONDENSING UNIT SCHEDULE

	MARK	AHU-1 CU-1	AHU-2 CU-2	AHU-3 CU-3	AHU-4 CU-4
	NOMINAL SYSTEM CAPACITY (TONS)	3.5	5	5	5
	MIN EFFECIENCY (SEER)	16.5	16.5	16.5	16.5
	MANUFACTURER	DAIKIN	DIKIN	DIKIN	DIKIN
	MODEL NO.- COND UNIT	DX6VSS4210	DX6VSS6010	DX6VSS6010	DX6VSS6010
	MODEL NO.- AIR HANDLER	DFVE42CP1400	DFVE60DP1400	DFVE60DP1400	DFVE60DP1400
AIR HANDLING UNIT	UNIT TAG	AHU-1	AHU-2	AHU-3	AHU-4
	FILTER TYPE AND THICKNESS	1" PLEATED	1" PLEATED	1" PLEATED	1" PLEATED
	SUPPLY AIR (CFM)	1400	1800	1800	1800
	OUTSIDE AIR (CFM)	100	200	305	305
	FAN MAX ESP (IN-H20)	0.7	0.7	0.7	0.7
	ENTERING AIR TEMPERATURE °Fdb/wb	77/66	77/66	77/66	77/66
	LEAVING AIR TEMPERATURE °Fdb/wb	55/54	55/54	55/54	55/54
	NUMBER OF REFRIGERANT CIRCUITS	1	1	1	1
	ELECTRICAL SERVICE VOLTAGE/ PHASE	208/1	208/1	208/1	208/1
	FAN HP	0.50	0.50	0.50	0.50
	ELECTRIC HEAT KW (AT V/PH LISTED)	15.0	15.0	15.0	15.0
	ELEC CIRCUIT-SINGLE POINT KIT MCA/MOCP	71.5/80	71.5/80	71.5/80	71.5/80
	SMOKE DETECTOR LOCATION	–	–	–	–
	SHUT DOWN RELAY TO FACP	–	–	–	–
	OPERATING WEIGHT (LBS)	140	167	167	167
CONDENSING UNIT DATA	UNIT TAG	CU-1	CU-2	CU-3	CU-4
	NUMBER OF REFRIGERANT CIRCUITS	1	1	1	1
	NUMBER OF COMPRESSORS	1-VARIABLE	1-VARIABLE	1-VARIABLE	1-VARIABLE
	COMPRESSOR RLA	25.5	26.9	26.9	26.9
	NUMBER OF CONDENSER FANS	1	1	1	1
	FLA OF EACH FAN	0.64	0.64	0.64	0.64
	AMBIENT AIR TEMPERATURE °Fdb	95°	95°	95°	95°
	ELECTRICAL SERVICE VOLTAGE/ PHASE	208/1	208/1	208/1	208/1
	ELEC CIRCUIT-1 MCA/MOCP	34.4/35	36.2/40	36.2/40	36.2/40
	OPERATING WEIGHT (LBS)	183	196	196	196
	UNIT NOTES	All	All	All	All

NOTES:
1. PROVIDE 2" THICK MERV-13 FILTER.
2. PROVIDE 24 V CONTROL FOR A PROGRAMMABLE W/WIFI CAPABILITY 24, 7-DAY TIME CLOCK T'STAT. CONTROL SYSTEM SHALL HAVE A 5 °F DEADBAND, SET POINT OVERLAP RESTRICTION, CAPABILITY OF SETBACK TO 55 °F(HEAT) AND 85 °F(COOL), 7 DAY CLOCK, 2 HOUR OCCUPANT OVERRIDE; 10 HOUR BACK UP. CAPABILITY OF PROPORTIONAL INTEGRAL CALCULATION TO DETERMINE THE NUMBER OF STAGES REQUIRED FOR HEATING, COOLING.
3. PROVIDE VARIABLE SPEED CONDENSING UNITS .
4. PROVIDE LOW AMBIENT CONTROLS TO 30 DEGREES F.
5. PROVIDE SINGLE PHASE LOSS VOLTAGE MONITORING DEVICE EQUAL TO P251-0092 TOTALINE TO PROTECT FROM OVER OR UNDER VOLTAGE, RAPID SHORT-CYCLING, AND POWER INTERRUPTIONS.
6. OUTSIDE AIR FOR VENTILATION ARE CALCULATED USING FLORIDA BUILDING CODE CHAPTER 4 FBC-M 8th EDITION 2023.
7. INSTALL AIR HANDLING AND CONDENSING UNITS PER MFG.' RECOMMENDATIONS.
8. REFRIGERATION LINE SIZE AND INSTALLATIONS IN ACCORDANCE WITH MFG.' RECOMMENDATIONS.
9. PROVIDE MANUAL AND MOTORIZED DAMPER FOR OUTSIDE AIR INSTALLED ON RETURN DUCT.
10. PROVIDE ECM MOTOR FOR AIR HANDLERS.
11. MODEL NUMBER FOR AC UNITS ARE PROVIDE TO ESTABLISH STANDARD OF QUALITY AND NECESSARY SPECIFICATIONS. COORDINATE WITH MANUFACTURE FOR FINAL MODEL NUMBERS.
7. CONTRACTOR SHALL COORDINATE VOLTAGE SELECTION AND CORRECT BREAKER WITH ELECTRICIAN BEFORE PLACING AN ORDER.
8. ANY EQUAL MANUFACTURE WITH SAME SPECIFICATIONS WILL BE ACCEPTABLE.

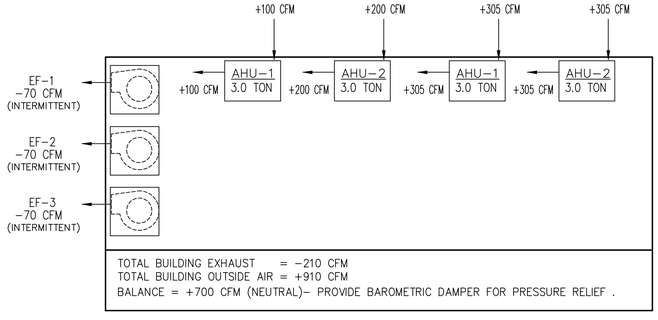

AIR DISTRIBUTION SCHEDULE

MARK	DESCRIPTION	MATERIAL	FINISH	MANUFACTURER & MODEL	NOTES
CD	CEILING DIFFUSER-SQUARE AND RECTANGULAR WITH OPPOSED BLADE VOLUME DAMPER.	ALUMINUM	BAKED OFF-WHITE ENAMEL	TITUS TMSA-AA	2,3
REG-1	SINGLE DEFLECTION SUPPLY AIR REGISTER BLADE WITH 3/4" SPACING. WITH OPPOSED BLADE VOLUME DAMPER.	ALUMINUM	BAKED OFF-WHITE ENAMEL	TITUS 301FL	2,3
REG-2	DOUBLE DEFLECTION SUPPLY AIR REGISTER BLADE WITH 3/4" SPACING. WITH OPPOSED BLADE VOLUME DAMPER.	ALUMINUM	BAKED OFF-WHITE ENAMEL	TITUS 300FL	2,3
OAL EAL	OUTSIDE/EXHAUST AIR LOUVER,FLANGE FRAME WITH BIRD SCREEN,WIND DRIVEN RAIN TYPE LOUVER	ALUMINUM	ALUMINUM	GREENHECK EHH601D	
RAG EAG TG	EGGCRATE RETURN OR EXHAUST GRILLE WITH OPPOSED BLADE VOLUME DAMPER ON RETURN GRILLS.	ALUMINUM	BAKED OFF-WHITE ENAMEL	TITUS 50F	1,2,3

NOTES:
1. PAINT FLAT BLACK INSIDE OF DUCTS BEHIND GRILLES. PROVIDE DUCT COLLAR WITH ALL GRILLES
2. SEE ARCHITECTURAL CEILING PLAN FOR FRAME TYPE.
3. PROVIDE SURFACE MOUNT BORDER FOR HARD CEILING.
4. PROVIDE WITH PLENUM.

FACE SIZE
SCHEDULED DESIGNATOR, IE.
12x12, CD
400 CFM AIR QUANTITY IN CUBIC FEET PER MINUTE

OAL=OUTSIDE AIR LOUVER
EAL=EXHAUST AIR LOUVER
TG=TRANSFER GRILLE

CD=CEILING DIFFUSER
REG=SIDEWALLOR CEILING REGISTER
RAG=RETURN AIR GRILLE
DG=DOOR GRILLE
LRD=LINEAR RETURN DIFFUSER
LD=LINEAR DIFFUSER

PROJECT DESIGN CONDITION

SPACE SERVED	DESIGN LOCATION	SUMMER MAXIMUM TEMPERATURE (°F) DB	SUMMER MAXIMUM HUMIDITY (RH%)	WINTER MINIMUM TEMPERATURE (°F)	REMARK
OUTSIDE	TALLAHASSEE	94/74	53	38	1,2
INSIDE	PAXTON	SUMMER MINIMUM TEMPERATURE (°F)	SUMMER MINIMUM HUMIDITY (RH%)	WINTER MAXIMUM TEMPERATURE (°F)	
GENERAL COMFORT	PAXTON	74(+/-2)	50(+/-5)	70(+/-2)	1,2

NOTES:
1. MINIMUM TEMPERATURE IN BUILDING MUST BE MAINTAINED AT 55 °F EVEN WHEN UNOCCUPIED.
2. DRY BULB AND RELATIVE HUMIDITY ARE TO BE MAINTAINED 6 INCH TO 6 FEET ABOVE THE FLOOR.
3. PF=0.3 PER TABLE C402.4 MIN. U FACTOR FOR FIXED WINDOWS=0.5, OPERABLE=0.65, SHGC(SEW)=0.3, SHGC(N)=0.33 AND VT FACTOR=0.5 OR MORE.
4. ROOF INSULATION R VALUE PER ARCHITECTURAL PLAN=50 AND WALLS INSULATION=14.2

EXHAUST FAN SCHEDULE

MARK	MANUFACTURER MODEL NO.	AIR FLOW (CFM)	SERVES	S.P. (IN.WG)	DRIVE	RPM	ELECTRICAL DATA VOLT	WATT/HP	PH	WEIGHTS (LBS)	REMARKS
EF-1	GREENHECK SP A90	70	TOILET	0.2	DIRECT	950	115	65 W	1	18	2,3,4,5,7
EF-2	GREENHECK SP A90	70	TOILET	0.2	DIRECT	950	115	65 W	1	18	2,3,4,5,7
EF-3	GREENHECK SP A90	70	SHOWER	0.2	DIRECT	950	115	65 W	1	18	3,4,5,6,7

REMARKS (TYPICAL ALL UNITS):
1. PROVIDE UNIT MOUNTED DISCONNECT SWITCH.
2. WITH OCCUPANCY SENSOR AND OVERRIDE OPTION.
3. PROVIDE SPEED CONTROLLERS.
4. PROVIDE BACKDRAFT DAMPER (BDD), AND BIRD SCREEN PROTECTION.
5. PROVIDE SUPPORT RODS AND VIBRATION ISOLATOR.
6. PROVIDE HUMIDISTAT WITH OVERRIDE SWITCH.
7. CONTRACTOR SHALL COORDINATE VOLTAGE SELECTION WITH THIS PROJECT PROVIDE TRANSFORMER IF NECESSARY.

THERMOSTAT SCHEDULE

MARK	SERVICE & LOCATION	OCCUPIED COOLING	OCCUPIED HEATING	OCCUPIED DEHUMIDIFICATION	UNOCCUPIED COOLING	UNOCCUPIED HEATING	UNOCCUPIED DEHUMIDIFICATION	
AHU-1	OFFICES	75	70	–	80	60	–	
AHU-2	ASSEMBLY AREA	78	63	–	80	60	–	
AHU-3	ASSEMBLY AREA	76	65	–	80	60	–	
AHU-4	ASSEMBLY AREA	74	67	–	80	60	–	

NOTES:
1. CONTRACTOR SHALL COORDINATE EXACT OPERATIONAL TIMES WITH OWNER/MANAGER PRIOR TO PROGRAMMING.

Cooling and Heating Load Calculation for Community and Sitting Area

Project Name: ICE23053-Senior Center
Prepared by: Ingenotech Consulting Engineers
06/02/2023 06:34PM

Air System Information
Air System Name ..... Community and Sitting
Equipment Class ..... SPLT AHU
Air System Type ..... SZCAV
Number of zones 1
Floor Area ..... 2505.0 ft²
Location ..... Tallahassee, Florida

Sizing Calculation Information
Zone and Space Sizing Method:
Zone CFM ..... Sum of space airflow rates
Space CFM ..... Individual peak space loads
Calculation Months ..... Jan to Dec
Sizing Data ..... User-Modified

Central Cooling Coil Sizing Data
Total coil load ..... 14.6 Tons
Total coil load ..... 175.0 MBH
Sensible coil load ..... 120.1 MBH
Coil CFM at Jun 1800 ..... 5465 CFM
Max block CFM ..... 5465 CFM
Sum of peak zone CFM ..... 5465 CFM
Sensible heat ratio 0.687
ft²/Ton 171.8
BTU/(hr-ft²) 69.8
Water flow @ 10.0 °F rise ..... N/A
Load occurs at ..... Jun 1800
OA DB / WB ..... 92.2 / 76.5 °F
Entering DB / WB ..... 78.5 / 67.4 °F
Leaving DB / WB ..... 58.1 / 57.1 °F
Coil ADP ..... 55.8 °F
Bypass Factor 0.100
Resulting RH ..... 58 %
Design supply temp. ..... 56.0 °F
Zone T-stat Check ..... 1 of 1 OK
Max zone temperature deviation ..... 0.0 °F

Central Heating Coil Sizing Data
Max coil load ..... 104.0 MBH
Coil CFM at Des Htg ..... 5465 CFM
Max coil CFM ..... 5465 CFM
Water flow @ 20.0 °F drop ..... N/A
Load occurs at ..... Des Htg
BTU/(hr-ft²) 41.5
Ent. DB / Lvg DB ..... 62.1 / 79.7 °F

Supply Fan Sizing Data
Actual max CFM ..... 5465 CFM
Standard CFM ..... 5452 CFM
Actual max CFM/ft² ..... 2.18 CFM/ft²
Fan motor BHP ..... 1.36 BHP
Fan motor kW ..... 1.01 kW
Fan static ..... 1.50 in wg

Outdoor Ventilation Air Data
Design airflow CFM ..... 810 CFM
CFM/ft² ..... 0.32 CFM/ft²
CFM/person ..... 6.28 CFM/person

Cooling and Heating Load Calculation for Offices

Project Name: ICE23053-Senior Center
Prepared by: Ingenotech Consulting Engineers
06/02/2023 06:39PM

Air System Information
Air System Name ..... Office
Equipment Class ..... SPLT AHU
Air System Type ..... SZCAV
Number of zones 1
Floor Area ..... 1060.0 ft²
Location ..... Tallahassee, Florida

Sizing Calculation Information
Zone and Space Sizing Method:
Zone CFM ..... Sum of space airflow rates
Space CFM ..... Individual peak space loads
Calculation Months ..... Jan to Dec
Sizing Data ..... Calculated

Central Cooling Coil Sizing Data
Total coil load ..... 3.2 Tons
Total coil load ..... 38.7 MBH
Sensible coil load ..... 34.3 MBH
Coil CFM at Sep 1500 ..... 1463 CFM
Max block CFM ..... 1463 CFM
Sum of peak zone CFM ..... 1463 CFM
Sensible heat ratio 0.886
ft²/Ton 328.4
BTU/(hr-ft²) 36.5
Water flow @ 10.0 °F rise ..... N/A
Load occurs at ..... Sep 1500
OA DB / WB ..... 92.4 / 75.9 °F
Entering DB / WB ..... 73.9 / 60.6 °F
Leaving DB / WB ..... 52.1 / 50.9 °F
Coil ADP ..... 49.7 °F
Bypass Factor 0.100
Resulting RH ..... 46 %
Design supply temp. ..... 50.0 °F
Zone T-stat Check ..... 1 of 1 OK
Max zone temperature deviation ..... 0.0 °F

Central Heating Coil Sizing Data
Max coil load ..... 16.3 MBH
Coil CFM at Des Htg ..... 1463 CFM
Max coil CFM ..... 1463 CFM
Water flow @ 20.0 °F drop ..... N/A
Load occurs at ..... Des Htg
BTU/(hr-ft²) 15.4
Ent. DB / Lvg DB ..... 66.2 / 76.6 °F

Supply Fan Sizing Data
Actual max CFM ..... 1463 CFM
Standard CFM ..... 1460 CFM
Actual max CFM/ft² ..... 1.38 CFM/ft²
Fan motor BHP ..... 1.84 BHP
Fan motor kW ..... 1.37 kW
Fan static ..... 2.00 in wg

Outdoor Ventilation Air Data
Design airflow CFM ..... 83 CFM
CFM/ft² ..... 0.08 CFM/ft²
CFM/person ..... 13.80 CFM/person

Outdoor Air Calculation Per table 403.3 FBCM for Community and Sitting Area

Project Name: ICE23053-Senior Center
Prepared by: Ingenotech Consulting Engineers
06/02/2023 06:34PM

1. Summary
Ventilation Sizing Method ..... Sum of Space OA Airflows
Design Ventilation Airflow Rate, Corrected for Exhaust Air ..... 810 CFM
Design Ventilation Airflow Rate ..... 0 CFM

2. Space Ventilation Analysis Table

Zone Name / Space Name	Mult.	Floor Area (ft²)	Maximum Occupants	Maximum Supply Air (CFM)	Required Outdoor Air (CFM/person)	Required Outdoor Air (CFM/ft²)	Required Outdoor Air (CFM)	Required Outdoor Air (% of supply)	Uncorrected Outdoor Air (CFM)
Zone 1									
106 - Community	1	1847.0	123.0	4102.0	5.00	0.06	0.0	0.0	725.8
100 - Sitting	1	658.0	6.0	1004.8	5.00	0.06	0.0	0.0	69.5
Totals (incl. Space Multipliers)				**0.0**					**0.0**

Ventilation Sizing Summary for Office

Project Name: ICE23053-Senior Center
Prepared by: Ingenotech Consulting Engineers
06/02/2023 06:39PM

1. Summary
Ventilation Sizing Method ..... Sum of Space OA Airflows
Design Ventilation Airflow Rate ..... 100 CFM

2. Space Ventilation Analysis Table

Zone Name / Space Name	Mult.	Floor Area (ft²)	Maximum Occupants	Maximum Supply Air (CFM)	Required Outdoor Air (CFM/person)	Required Outdoor Air (CFM/ft²)	Required Outdoor Air (CFM)	Required Outdoor Air (% of supply)	Uncorrected Outdoor Air (CFM)
Zone 1									
102-NW Office-1	1	200.0	1.0	395.7	5.00	0.06	0.0	0.0	17.0
105- N- Reception	1	240.0	2.0	243.1	5.00	0.06	0.0	0.0	24.4
111- S- Serving Area	1	240.0	2.0	168.0	5.00	0.06	0.0	0.0	24.4
113-SW- Office-2	1	200.0	1.0	530.6	5.00	0.06	0.0	0.0	17.0
Bathroom-101	1	60.0	0.0	42.0	0.00	0.00	0.0	0.0	0.0
Bathroom-103	1	60.0	0.0	42.0	0.00	0.00	0.0	0.0	0.0
Bathroom-107	1	60.0	0.0	42.0	0.00	0.00	0.0	0.0	0.0
Totals (incl. Space Multipliers)				**1463.5**					**82.8**

1 M300 MECHANICAL SCHEDULES
NOT TO SCALE

Cabral Engineering Inc
Engineering – Consulting – Project Management
1058 Palm Cove Dr, Orlando, FL 32835
(321) 246 – 4041 C.A. No. 33227
CEI Project # 22.63

REVISION

ARCHITECTURE + ENGINEERING
License No. AR98890 License No. CA30990
1230 Oakley Seaver Drive, Suite 200 - Clermont, FL 34711
P: 888-850-FFAE (3323)
www.forefrontae.com
FOREFRONT
Service Beyond Design

This item has been electronically signed & sealed by Farshad Ashtiani, PE on the date and/or time stamp shown using a digital signature. Printed copies of this document are not considered signed &sealed and, the signature must be verified on any electronic copies with Engineer of record.

AGING FACILITY
22174 US HIGHWAY 331 N PAXTON FL32567
MECHANICAL EQUIPMENT SCHEDULE

ANY DISCREPANCY OR ERROR IN DIMENSIONS OR NOTES SHALL BE BROUGHT TO THE ATTENTION OF THE ARCHITECT/ENGINEER FOR CLARIFICATION PRIOR TO THE COMMENCEMENT OF CONSTRUCTION.

JOB #: 21-17357
DATE: 07/21/2023
M300

© FOREFRONT ARCHITECTURE & ENGINEERING LLC 2014 THIS DOCUMENT AND/OR THE DESIGN CONCEPTS EXPRESSED HEREIN ARE THE PROPERTY OF FOREFRONT ARCHITECTURE & ENGINEERING LLC AND ALL RIGHTS OF OWNERSHIP, INCLUDING COPYRIGHT OF INTELLECTUAL PROPERTY, ARE RESERVED. ANY REPRODUCTIONS, COPYING, OR USE OF THIS DOCUMENT AND/OR THE DESIGN CONCEPT WITHOUT THE WRITTEN CONSENT OF FOREFRONT ARCHITECTURE & ENGINEERING LLC IS STRICTLY PROHIBITED AND PROTECTED BY UNITED STATES AND INTERNATIONAL LAW. IF PRINTED ON 11X17 SCALE IS HALF THE SIZE NOTED.

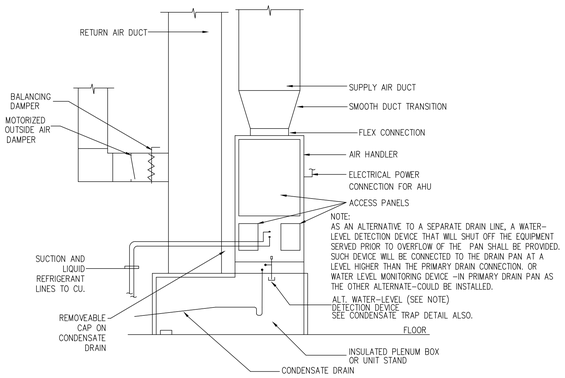

1 M400 VERTICAL AIR HANDLING UNIT DETAIL

SCALE: N.T.S.

USE OF 2 IN. WIDE HANGERS 22 GAGE, 2"x1.5" HANGERS MAY BE SUBSTITUTED FOR 3 HANGERS FOR DUCTS WITH WIDTHS NOT OVER 48 IN. AND DEPTHS NOT OVER 24 IN. PROVIDED THAT NOT MORE THAN ONE JOINT OCCURS BETWEEN HANGERS AND THE MAXIMUM HANGER SPACING IS 4FT.

EXCEPTION: WHEN THE DUCT PERIMETER IS 80 OR LESS AND DOES NOT REQUIRE REINFORCEMENT TWO JOINTS ARE PERMITTED BETWEEN HANGERS.

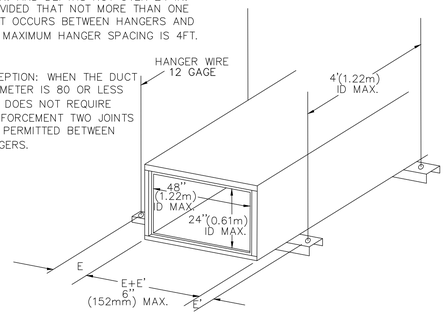

USE OF 2" (50mm) WIDE HANGER CHANNELS

2 M400 FIBROUS GLASS DUCT SUPPORT DETAIL

SCALE: N.T.S.

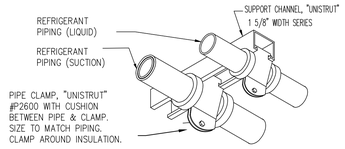

3 M400 REFRIGERANT PIPING SUPPORT DETAIL

SCALE: N.T.S.

TABLE 5-1
RECTANGULAR DUCT HANGERS
MINIMUM SIZE

MAXIMUM HALF OF DUCT PERIMETER	PAIR AT 10 FT SPACING		PAIR AT 8 FT SPACING		PAIR AT 5 FT SPACING		PAIR AT 4 FT SPACING	
	STRAP	WIRE/ ROD	STRAP	WIRE/ ROD	STRAP	WIRE/ ROD	STRAP	WIRE/ ROD
P/2 = 30"	1"x 22 GA.	10 GA. (.135")	1"x 22 GA.	10 GA. (.135")	1"x 22 GA.	12 GA. (.106")	1"x 22 GA.	12 GA. (.106")
P/2 = 72"	1"x 18 GA.	3/8"	1"x 20 GA.	1/4"	1"x 22 GA.	1/4"	1"x 22 GA.	1/4"
P/2 = 96"	1"x 16 GA.	3/8"	1"x 18 GA.	3/8"	1"x 20 GA.	3/8"	1"x 22 GA.	1/4"
P/2 = 120"	1-1/2" x 16 GA	1/2"	1"x 16 GA.	3/8"	1"x 18 GA.	3/8"	1"x 20 GA.	1/4"
P/2 = 168"	1-1/2" x 16 GA	1/2"	1-1/2" x 16 GA	1/2"	1"x 16 GA.	3/8"	1"x 18 GA.	3/8"
P/2 = 192"	NOT GIVEN	1/2"	1-1/2" x 16 GA	1/2"	1"x 16 GA.	3/8"	1"x 16 GA.	3/8"
P/2 = 193" UP	SPECIAL ANALYSIS REQUIRED							

WHEN STRAPS ARE LAP JOINED USE THESE MINIMUM FASTENERS:	SINGLE HANGER MAXIMUM ALLOWABLE LOAD	
	STRAP	WIRE OR ROD (DIA.)
1"x 18, 20, 22 GA.-TWO #10 OR ONE 1/4" BOLT 1"x 16 GA.-TWO 1/4" DIA. 1 1/2"x 16 GA. -TWO 3/8" DIA. PLACE FASTENERS IN SERIES, NOT SIDE BY SIDE.	1"x 22 GA.-260 LBS. 1"x 20 GA.-320 LBS. 1"x 18 GA.-420 LBS. 1"x 16 GA.-700 LBS. 1 1/2"x 16 GA. -1100 LBS.	0.016"-80 LBS. 0.135"- 120 LBS. 0.162"- 160 LBS. 1/4"- 270 LBS. 3/8"- 680 LBS. 1/2"- 1250 LBS. 5/8"- 2000 LBS. 3/4"- 3000 LBS.

NOTES

1. DIMENSIONS OTHER THAN GAGE ARE IN INCHES.
2. TABLES ALLOW FOR DUCT WEIGHT, 1 LB./SF INSULATION WEIGHT AND NORMAL REINFORCEMENT AND TRAPEZE WEIGHT, BUT NO EXTERNAL LOADS.
3. FOR CUSTOM DESIGN OF HANGERS, DESIGNERS MAY CONSULT SMACNA'S RECTANGULAR INDUSTRIAL DUCT STANDARDS, THE AISI COLD FORMED STEEL DESIGN MANUAL AND THE AISC STEEL CONSTRUCTION MANUAL.
4. STRAPS ARE GALVANIZED STEEL; OTHER MATERIALS ARE UNCOATED STEEL.
5. ALLOWABLE LOADS FOR P/2 ASSUME THAT DUCTS ARE 16 GA. MAXIMUM, EXCEPT THAT WHEN MAXIMUM DUCT DIMENSION (W) IS OVER 60" THEN P/2 MAXIMUM IS 1.25W.
6. FOR UPPER ATTACHMENTS REFER TO SMACNA DUCT STANDARDS - THIRD EDITION: FIG. 5-2,5-3, AND 5-4.
7. FOR LOWER ATTACHMENTS REFER TO SMACNA DUCT STANDARDS - THIRD EDITION: FIG. 5-5.
8. FOR TRAPEZE SIZES REFER TO SMACNA DUCT STANDARDS - THIRD EDITION: TABLE 5-3 AND FIG. 5-6.
9. 12, 10, OR 8 GA. WIRE IS STEEL OF BLACK ANNEALED, BRIGHT BASIC, OR GALVANIZED TYPE.
10. CABLE HANGING SYSTEMS WITH ADJUSTABLE MECHANICAL DEVICE.

COPYRIGHT: HVAC DUCT CONSTRUCTION STANDARDS METAL AND FLEXIBLE - THIRD EDITION.

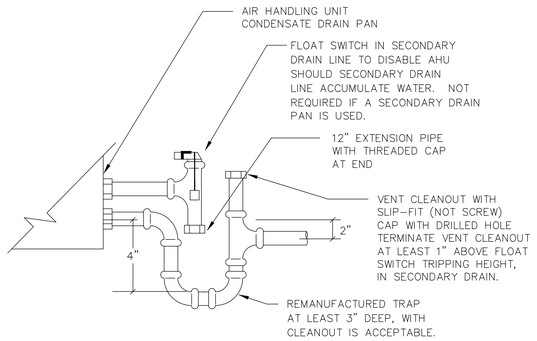

4 M400 CONDENSATE TRAP DETAIL

SCALE: N.T.S.

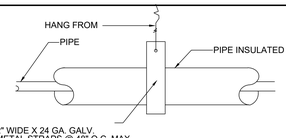

5 M400 HANGER DETAIL

SCALE: N.T.S.

"NOTE: 4 CLIPS PER CONDENSING UNIT". RM CLIPS ARE G-90 RATED FOR CORROSION & WIND RESISTANCE, ASCE 7-10, 150 MPH WINDS RM CLIP

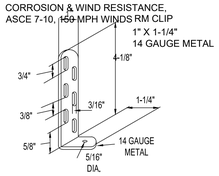

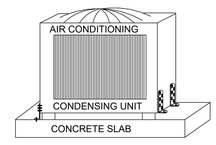

3 EACH 3/16" X 3/8" SHEET METAL SCREWS IN THE SLOTTED HOLES ON RM CLIP

1 EACH 1/4" X 1 3/4" LONG TAPCON CONCRETE SCREW THROUGH RM CLIP INTO CONCRETE SLAB

6 M400 CONDENSING UNIT MOUNTING DETAIL

SCALE: N.T.S.

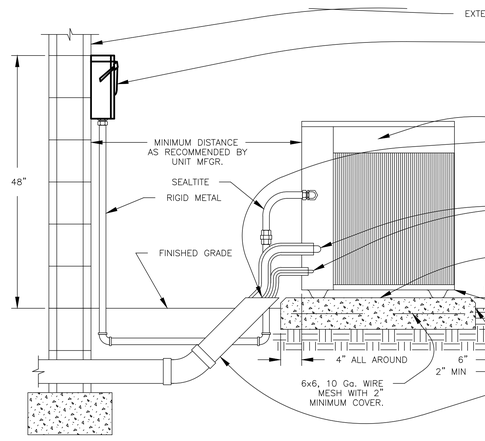

7 M400 CONDENSING UNIT INSTALLATION DETAIL

SCALE: N.T.S.

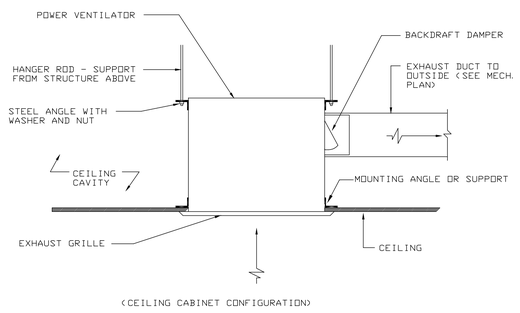

(CEILING CABINET CONFIGURATION)

8 M400 POWER VENTILATOR DETAIL

SCALE: N.T.S.

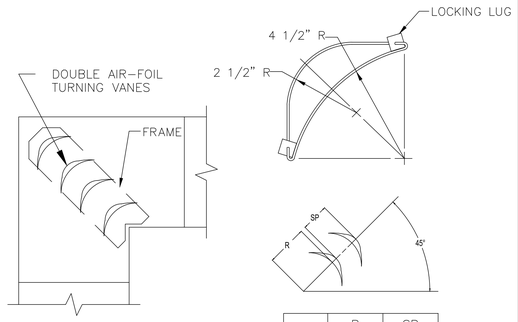

(PROVIDE AT ALL 90 BENDS)

	R	SP
SMALL	2"	1 1/2"
LARGE	4 1/2"	3 1/4"

9 M400 TURNING VANES DETAIL

SCALE: N.T.S.

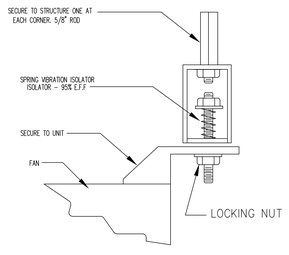

10 M400 FAN SUSPENSION DETAIL

SCALE: N.T.S.

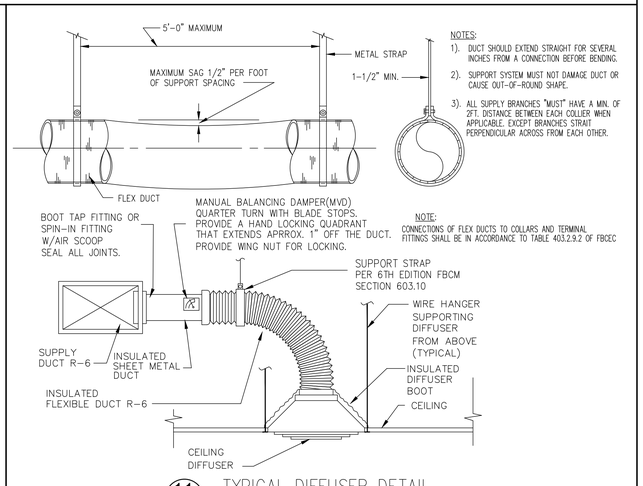

11 M400 TYPICAL DIFFUSER DETAIL

SCALE: N.T.S.

X M400 MECHANICAL DETAILS

N.T.S.

Cabral Engineering Inc
Engineering – Consulting – Project Management
1058 Palm Cove Dr, Orlando, FL 32835
(321) 246 – 4041 C.A. No. 33227
CEI Project # 22.63

REVISION

ARCHITECTURE + ENGINEERING
License No. AR98890 License No. CA30990
1230 Oakley Seaver Drive, Suite 200 - Clermont, FL 34711
P: 888-850-FFAE (3323)
www.forefrontae.com
FOREFRONT Service Beyond Design

This item has been electronically signed & sealed by Farshad Astilchi, PE on the date and/or time stamp shown using a digital signature. Printed copies of this document are not considered signed &sealed and, the signature must be verified on any electronic copies with Engineer of record.



AGING FACILITY
22174 US HIGHWAY 331 N PAXTON FL32567
MECHANICAL DETAILS

ANY DISCREPANCY OR ERROR IN DIMENSIONS OR NOTES SHALL BE BROUGHT TO THE ATTENTION OF THE DESIGN PROFESSIONAL FOR CLARIFICATION PRIOR TO CONSTRUCTION BY CONTRACTOR.

JOB #: 21-17267
DATE: 07/21/2023

M400

© FOREFRONT ARCHITECTURE & ENGINEERING LLC 2014 THIS DOCUMENT AND/OR THE DESIGN CONCEPTS EXPRESSED HEREIN ARE THE PROPERTY OF FOREFRONT ARCHITECTURE & ENGINEERING LLC AND ALL RIGHTS OF OWNERSHIP, INCLUDING COPYRIGHT OF INTELLECTUAL PROPERTY, ARE RESERVED. ANY REPRODUCTIONS, COPYING, OR USE OF THIS DOCUMENT AND/OR THE DESIGN CONCEPT WITHOUT THE WRITTEN CONSENT OF FOREFRONT ARCHITECTURE & ENGINEERING LLC IS STRICTLY PROHIBITED AND PROTECTED BY UNITED STATES AND INTERNATIONAL LAW. IF PRINTED ON 11X17 SCALE IS HALF THE SIZE NOTED.

PLUMBING LEGEND AND ABBREVIATIONS

(ALL SYMBOLS SHOWN ARE NOT NECESSARILY USED ON THE DRAWINGS)

INGENOTECH CONSULTING ENGINEERS,PLLC HEREBY RESERVES ITS COMMON LAW COPYRIGHTS AND OTHER COPYRIGHTS IN THE PLANS, IDEAS, DETAILS, SPECIFICATIONS AND DESIGNS. THESE IDEAS, DESIGNS, SPECIFICATION, DETAILS AND PLANS ARE NOT TO BE COPIED OR CHANGED IN ANY MANNER OR FORM WHAT-SOEVER, NOR ARE THEY TO BE ASSIGNED TO ANY THIRD PARTY WITHOUT FIRST OBTAINING THE EXPRESS WRITTEN PERMISSION FROM INGENOTECH CONSULTING ENGINEERS,PLLC

ABBREVIATIONS - PLUMBING

AD	AREA DRAIN
AP	ACCESS PANEL
BLDG	BUILDING
BOB	BOTTOM OF BEAM
BOP	BOTTOM OF PIPE
BV	BALANCING VALVE
CD	CONDENSATE DRAIN
CFH	CUBIC FEET PER HOUR
CFM	CUBIC FEET PER MINUTE
CFS	CUBIC FEET PER SECOND
CI	CAST IRON
CLG	CEILING
CO	CLEANOUT
COTG	CLEANOUT TO GRADE
CONN	CONNECTION
CONT	CONTINUATION
CP	CIRCULATING PUMP
CV	CHECK VALVE
CW	COLD WATER
DF	DRINKING FOUNTAIN
DFU	DRAINAGE FIXTURE UNIT
DIA	DIAMETER
DN	DOWN
DR	DRAIN
DROP	DROP (WITHIN FLOOR)
DWG	DRAWING
(E)	EXISTING
EEW	EMERGENCY EYE WASH
EL	ELEVATION
ET	EXPANSION TANK
FD	FLOOR DRAIN
FL	FLOOR
FSK	FLOOR SINK
FT	FEET
FU	FIXTURE UNIT
G	(LOW PRESSURE) NATURAL GAS
GAL	GALLONS
GD	GARAGE DRAIN
GPM	GALLONS PER MINUTE
GV	GATE VALVE
HT	HEAT TRACING
HX	HEAT EXCHANGER
ID	INSIDE DIAMETER
IE	INVERT ELEVATION
IN	INCH
IW	INDIRECT WASTE
JS	JANITOR SINK
L	LAVATORY
LDR	LEADER
MAX	MAXIMUM
MG	MEDIUM PRESSURE GAS
MH	MANHOLE
MIN	MINIMUM
(N)	NEW
NC	NORMALLY CLOSED
NIC	NOT IN THIS CONTRACT
NO	NORMALLY OPEN

ABBREVIATIONS - PLUMBING

A/C	ABOVE CEILING
AFF	ABOVE FINISH FLOOR
B/F	BELOW FLOOR
CB	CATCH BASIN
CD	CONDENSATE DRAIN
CFH	CUBIC FEET PER HOUR
CO	CLEANOUT
CONT	CONTINUATION
CW	DOMESTIC COLD WATER
DN	DOWN
DS	DOWNSPOUT
DP	DRAIN PAN DRAIN
EXT	EXISTING
EWC	ELECTRIC WATER COOLER
EWH	ELECTRIC WATER HEATER
FS	FLOOR SINK
°F	DEGREE FAHRENHEIT
FCO	FLOOR CLEANOUT
FD	FLOOR DRAIN
PG	PROPANE GAS
GPM	GALLONS PER MINUTE
HB	HOSE BIBB
HD	HUB DRAIN
HW	DOMESTIC HOT WATER
HWR	DOMESTIC HOT WATER RECIRCULATING
HS	HAND SINK
IE	INVERT ELEVATION
IR	IRRIGATION
KW	KILOWATT
KS	KITCHEN SINK COUNTER TOP
LBS	POUNDS
LAVH	ADA LAVATORY
LAV	REGULAR LAVATORY
MH	MANHOLE
MS	MOP SINK
NIC	NOT IN CONTRACT
NTS	NOT TO SCALE
NC	NORMALLY CLOSED
NG	NATAURAL GAS
NPW	NON-POTABLE WATER
OD	OUTSIDE DIAMETER
OS&Y	OUTSIDE SCREW & YOKE GATE VALVE
OST	OVERFLOW STORM
PVC	POLYVINYL CHLORIDE PIPE
P/FT	PITCH PER FOOT
POC	POINT OF CONNECTION
PRV	PRESSURE REDUCING VALVE
PSI	POUNDS PER SQUARE INCH
PSIG	POUNDS PER SQUARE INCH (GAUGE)
RD	ROOF DRAIN
RPBP	REDUCED PRESSURE BACK FLOW PREVENTION DEVICE
RISE	RISE (WITH IN FLOOR)
SAN	SANITARY
SD	SMOKE DETECTOR
SF	SQUARE FEET
SK	SINK
ST	STORM PIPING
SH	SHEET
ST	STORM
STO	OVERFLOW STORM DRAIN

ABBREVIATIONS - PLUMBING

TD	TRENCH DRAIN
TDH	TOTAL DISCHARGE HEAD
TMV	TEMPERATURE MIXING VALVE
TOP	TOP OF PIPE
TOS	TOP OF SLAB
TP	TRAP PRIMER
TPV	TRAP PRIMER VALVE
TS	TAMPER SWITCH
TYP	TYPICAL
UON	UNLESS OTHERWISE NOTED
UP	UP (PENETRATES FLOOR SLAB)
UR	URINAL
URH	ADA URINAL
V	VENT
VB	VACUUM BREAKER
VR	VENT RISE
VTR	VENT THROUGH ROOF
WC	WATER CLOSET
WCH	ADA WATER CLOSET
WCO	WALL CLEANOUT
WH	WALL HYDRANT
WHA	WATER HAMMER ARRESTER
WF	WATER FILTER
WFU	WATER FIXTURE UNIT
Z	ZONE
3 COMP S	3 COMPARTMENT SINK

PIPING LEGEND

POTABLE WATER

	DOMESTIC COLD WATER PIPING
	DOMESTIC HOT WATER PIPING
	DOMESTIC HOT WATER RETURN PIPING

MISCELLANEOUS

P / 1	P = SAN, VENT STACK OR DOMESTIC WATER RISER
	ST = STORM DRAIN LEADER RISER
	F = FIRE STANDPIPE RISER
	RISER
	RISER NO.
CP / 1	EQUIPMENT DESIGNATION
	EQUIPMENT
	EQUIPMENT NO.
1 / P300	DETAIL DESIGNATION
	DETAIL NUMBER
	DWG. SHEET NO.
1	SHEET NOTE NUMBER
1	REVISION NUMBER

SYMBOL LEGEND

	Y STRAINER WITH BLOW OFF VALVE
	FLEXIBLE CONNECTION
(H) (X) (L)	EXPANSION LOOP SIZE
	SEISMIC JOINT
	SHOCK ABSORBER
	VACUUM BREAKER
M	MANUAL AIR VENT
A	AUTOMATIC AIR VENT
	PRESSURE GAUGE AND COCK
	THERMOMETER
	WATER FLOW SWITCH
	RUNNING TRAP
	BASKET STRAINER
	VALVE (SPECIFICATION FOR TYPE)
	CHECK VALVE
	CHECK VALVE WITH ABD
	SOLENOID VALVE
	PRESSURE REDUCING VALVE
	OS&Y (OUTSIDE SCREW & YOKE) VALVE
	AUTOMATIC FLOW CONTROL VALVE
	BUTTERFLY VALVE (MANUAL)
	GLOBE VALVE
	CALIBRATED BALANCING VALVE
P	VALVE WITH TAMPER SWITCH
	CIRCUIT SOLVER
	GAS COCK VALVE
	SEISMIC VALVE
	RELIEF VALVE
	ANGLE RELIEF VALVE
	TEMPERATURE MIXING VALVE
	UNION
	REDUCER
	ECCENTRIC REDUCER (E.R.)
	SLEEVE
	PUMP
M	METER
	HOSE BIBB
	WATER HAMMER ARRESTER
	FLOOR DRAIN, AREA DRAIN, PLANT DRAIN, GARAGE DRAIN
	FLOOR SINK
	P-TRAP
	HUB DRAIN
	EXTERIOR CLEANOUT
	POINT OF CONNECTION (NEW TO EXISTING)

PIPING LEGEND

WASTE / VENT / STORM

SAN	SANITARY (ABOVE FLOOR)
SAN	SANITARY (BELOW FLOOR)
AV	ACID VENT PIPING
IW	INDIRECT WASTE PIPING
CD	CONDENSATE DRAIN PIPING
GW	GREASE WASTE PIPING
℄	CENTER LINE
NPW	NON-POTABLE WATER
ST	STORM
OST	OVERFLOW STORM

SYMBOL LEGEND

	BOTTOM PIPE CONNECTION
	TOP PIPE CONNECTION
	VALVE IN VERTICAL
	P-TRAP
	FLOOR CLEANOUT/GRADE CLEANOUT
	CLEANOUT/PLUG
	PIPE DOWN
	PIPE UP
	CAP
	CHANGE IN PIPE ELEVATION
	ARROW INDICATES DIRECTION OF FLOW
	PITCH PIPE DOWN IN DIRECTION OF ARROW
	FRESH AIR INLET
	WALL HYDRANT

DRAWING INDEX

SHEET NO.	SHEET TITLE
P100	PLUMBING LEGENDS, ABBREVIATIONS AND INDEX
P101	PLUMBING SPECIFICATION
P200	PLUMBING FLOOR PLAN - SANITARY / WATER
P201	PLUMBING ROOF PLAN
P300	PLUMBING RISER DIAGRAM - SANITARY / WATER
P400	PLUMBING FIXTURE SCHEDULE
P500	PLUMBING DETAILS

SCOPE OF WORK

PROVIDE MECHANICAL SYSTEM DESIGN NEW BUILING WITH ASSEMBLY APPLICATION BASED ON PROPOSED ARCHITECTURAL PLAN AND FBC 8th EDITION 2023.

1 / P100 PLUMBING LEGENDS, ABBREVIATIONS AND INDEX

NOT TO SCALE

Cabral Engineering Inc
Engineering – Consulting – Project Management
1058 Palm Cove Dr, Orlando, FL 32835
(321) 246 – 4041 C.A. No. 33227
CEI Project # 22.63

ARCHITECTURE + ENGINEERING
License No. CA30990
1230 Oakley Seaver Drive, Suite 200 - Clermont, FL 34711
P: 888-850-FFAE (3323)
www.forefrontae.com
FOREFRONT
Service Beyond Design
License No. AR98800

This item has been electronically signed & sealed by Farshad Astilchi, PE on the date and/or time stamp shown using a digital signature. Printed copies of this document are not considered signed &sealed and, the signature must be verified on any electronic copies with Engineer of record.

REVISION

AGING FACILITY
22174 US HIGHWAY 331 N PAXTON FL32567
PLUMBING LEGENDS, ABBREVIATION AND INDEX

ANY DISCREPANCY OR ERROR IN DIMENSIONS OR NOTES SHALL BE BROUGHT TO THE ATTENTION OF THE DESIGN PROFESSIONAL FOR CLARIFICATION PRIOR TO CONSTRUCTION BY CONTRACTOR.

JOB #: 23.17.267
DATE: 07/21/2023

P100

© FOREFRONT ARCHITECTURE & ENGINEERING LLC 2024 THIS DOCUMENT AND/OR THE DESIGN CONCEPTS EXPRESSED HEREIN ARE THE PROPERTY OF FOREFRONT ARCHITECTURE & ENGINEERING LLC AND ALL RIGHTS OF OWNERSHIP, INCLUDING COPYRIGHT OF INTELLECTUAL PROPERTY, ARE RESERVED. ANY REPRODUCTIONS, COPYING, OR USE OF THIS DOCUMENT AND/OR THE DESIGN CONCEPT WITHOUT THE WRITTEN CONSENT OF FOREFRONT ARCHITECTURE & ENGINEERING LLC IS STRICTLY PROHIBITED AND PROTECTED BY UNITED STATES AND INTERNATIONAL LAW. IF PRINTED ON 11x17 SCALE IS HALF THE SIZE NOTED.

SECTION 15400 – PLUMBING

1. SCOPE OF WORK

A. FURNISHING OF ALL LABOR, MATERIALS, TOOLS, TRANSPORTATION SERVICES, ETC. NECESSARY TO COMPLETE THE INSTALLATION OF THE PLUMBING SYSTEM AND AS DESCRIBED IN THESE SPECIFICATIONS, AS ILLUSTRATED ON THE ACCOMPANYING ICE DRAWINGS, OR AS DIRECTED BY THE ARCHITECT.

B. ALL HOT AND COLD WATER SYSTEMS WITH COMPLETE CONNECTIONS FROM THE WATER METER TO ALL PLUMBING FIXTURES AND EQUIPMENT REQUIRING WATER CONNECTIONS. THESE SYSTEMS WILL BE COMPLETE WITH CONTROLS, VALVES, EQUIPMENT, DEVICES AND INSULATION.

C. ALL SOIL, WASTE, AND VENT SYSTEMS OUTSIDE AND INSIDE THE BUILDING AND SEWER CONNECTIONS TO MUNICIPAL SYSTEM AS INDICATED ON ICE DRAWINGS.

D. FURNISH AND SET PLUMBING FIXTURES, INCLUDING ALL THE REQUIRED TRIM AND SUPPORTS.

E. TRENCHING, PIPE BEDDING, BACKFILLING, COMPACTION AND SOIL TREATMENT.

F. ALL ROUGH-IN AND FINAL CONNECTION TO EQUIPMENT, FIXTURES AND SERVICE AREAS IF INDICATED ON THE ICE DRAWINGS, INCLUDING NECESSARY TRAPS AND MISCELLANEOUS ITEMS AS REQUIRED. COORDINATE W/OWNER.

G. FURNISH ALL FINAL PLUMBING CONNECTIONS TO HEATING AND AIR CONDITIONING EQUIPMENT INCLUDING CONDENSATE DRAINS, INDIRECT WASTE AND GAS PIPING.

H. METERS AND UTILITY CONNECTIONS:

1. WATER: COORDINATE WORK WITH THE LOCAL WATER COMPANY. FURNISH ALL LABOR AND/OR MATERIAL (NOT FURNISHED BY THE WATER COMPANY) WHICH IS REQUIRED TO CONNECT TO EXISTING LINE AND/OR SET METER. INSTALL ALL PERMANENT WATER SUPPLY LINES FROM THE POINT OF CONNECTION AND COMPLETE THE WORK AS SHOWN, ALL IN LINES FROM THE POINT OF CONNECTION AND COMPLETE THE WORK AS SHOWN, ALL IN ACCORDANCE WITH THE REQUIREMENTS OF THE LOCAL WATER COMPANY. TAP FEES SHALL BE PAID BY OWNER. (IF REQUIRED) PLUMBING CONTRACTOR SHALL PAY ALL WORK RELATED INSPECTION FEES BY AUTHORITY HAVING JURISDICTION.

2. SEWER CONNECTIONS: COORDINATE WORK WITH THE LANDLORD AND/OR LOCAL UTILITY COMPANY. ALL WORK AND MATERIALS SHALL BE IN STRICT ACCORDANCE WITH THE REQUIREMENTS OF THE LOCAL GOVERNING AUTHORITY. TAP FEES SHALL BE PAID BY OWNER (IF REQUIRED). PLUMBING CONTRACTOR SHALL PAY ALL WORK RELATED INSPECTION FEES BY AUTHORITY HAVING JURISDICTION (IF REQUIRED).

3. GAS: COORDINATE WORK WITH LOCAL UTILITY AND FURNISH ALL LABOR AND/OR MATERIALS (NOT FURNISHED BY UTILITY WHICH IS REQUIRED TO PROVIDE A WORKING UTILITY FOR OWNER, INCLUSIVE OF METER AND/OR REGULATOR. FURNISH SYSTEM FROM TAPPING POINT TO AND IN THE BUILDING AS REQUIRED AND SHOWN ON ICE DRAWINGS. TAP FEES SHALL BE PAID BY OWNER. PLUMBING CONTRACTOR SHALL PAY ALL WORK RELATED INSPECTION FEES.

A. GAS PIPING TO HEATING, VENTILATING AND AIR CONDITIONING EQUIPMENT, AND WATER HEATER.

2. SHOP DRAWINGS

A. WITHIN 15 DAYS AFTER AWARD OF CONTRACT, AND BEFORE ANY PLUMBING MATERIALS ARE DELIVERED TO THE JOB SITE, SUBMIT TO THE OWNER THREE (3) COMPLETE SHOP DRAWINGS IN ACCORDANCE WITH THE PROVISIONS OF SECTION 01300 OF THESE SPECIFICATIONS, INCLUDING ALL PLUMBING FIXTURES, TRIM, DRAINS, CLEANOUTS, PIPING, VALVES, INSULATION, HANGERS, SUPPORTS, EQUIPMENT AND DEVICES PROPOSED TO BE FURNISHED AND INSTALLED. SHOP DRAWINGS SHALL NOT BE REVIEWED UNLESS THEY BEAR THE REVIEW STAMP OF THE GENERAL CONTRACTOR.

3. PRODUCT HANDLING

A. IN THE EVENT OF DAMAGE, IMMEDIATELY MAKE ALL REPAIRS AND REPLACEMENTS NECESSARY TO THE APPROVAL OF, AND AT NO ADDITIONAL COST TO THE OWNER.

4. EXAMINATION OF THE SITE

A. ALL CONTRACTORS SUBMITTING PROPOSALS FOR THIS WORK SHALL FIRST EXAMINE THE SITE AND ALL CONDITIONS, INCLUDING LOCAL RULES & REGULATIONS, THEREON AND/OR THEREIN. ALL PROPOSALS SHALL HAVE TAKEN INTO CONSIDERATION ALL CONDITIONS THAT MAY AFFECT THE WORK UNDER THIS CONTRACT. LACK OF THIS INFORMATION WILL NOT BE CONSIDERED AS JUSTIFICATION FOR EXTRA COST OR ALLOWANCES TO THE CONTRACT PRICE.

5. GUARANTEE

A. ALL WORK PERFORMED UNDER THIS SECTION SHALL BE GUARANTEED TO BE FREE OF DEFECTIVE MATERIALS AND WORKMANSHIP FOR A PERIOD OF ONE YEAR AFTER FINAL ACCEPTANCE OF THE WORK BY THE OWNER.

B. UPON NOTICE RECEIVED FROM THE OWNER, ARCHITECT OR ENGINEER, OF FAILURE OF ANY PART OF THE GUARANTEED EQUIPMENT DURING THE GUARANTY PERIODS, THE AFFECTED PART OR PARTS SHALL BE PROMPTLY REPLACED WITH NEW PARTS BY THE CONTRACTOR AT NO ADDITIONAL COST TO THE OWNER. ALL LABOR REQUIRED TO PERFORM GUARANTEED SHALL BE INCLUDED AS PART OF THE COMPLETE WARRANTY.

6. PRODUCTS

A. DESCRIPTION

(1) SOIL, WASTE AND VENT PIPING: BELOW FLOOR TO 5'0" OUTSIDE BUILDING AND YARD PIPING SHALL BE A.B.S. OR P.V.C. SCHEDULE 40 PIPE AND FITTINGS IF APPROVED BY LOCAL AUTHORITY, OR STANDARD WEIGHT COATED CAST IRON SOIL PIPE AND CAST IRON/NEOPRENE GASKET FITTINGS CONFORM TO ONE OF THE STANDARDS LISTED IN TABLE 702.2 OF FPCP (8th EDITION). YARD PIPING, WHERE UNDER A SUPERIMPOSED LOAD CONDITION SUCH AS A DRIVEWAY OR PARKING AREA, SHALL BE SERVICE WEIGHT CAST IRON SOIL PIPE AND CAST IRON/NEOPRENE GASKET FITTINGS.

(2) ABOVE FLOOR SHALL BE A.B.S. OR P.V.C. SCHEDULE 40 IF APPROVED BY LOCAL AUTHORITY, OR STANDARD WEIGHT COATED CAST IRON PIPE WITH NEOPRENE RUBBER GASKETS, OR HUBLESS CAST IRON PIPE WITH NEOPRENE RUBBER GASKETS AND STAINLESS STEEL CLAMPS (CLAMPS ALL OR EQUAL) CONFORM TO ONE OF THE STANDARDS LISTED IN TABLE 702.1 OF FPCP (8th EDITION).

(3) HOT AND COLD WATER PIPING:

(A) ABOVE THE FLOOR SHALL BE CPVC MATERIAL PIPING; CONFORM TO ONE OF THE STANDARDS LISTED IN TABLE 605.3 AND 605.4 OF FPCP (8th EDITION) BASED ON INTENDED USE OF PIPING. ALL HOT WATER DISTRIBUTION PIPE AND TUBING SHALL HAVE MINIMUM PRESSURE RATING OF 100 PSI AT 180°F.

INGENOTECH CONSULTING ENGINEERS,PLLC HEREBY RESERVES ITS COMMON LAW COPYRIGHTS AND OTHER COPYRIGHTS IN THE PLANS, IDEAS, DETAILS, SPECIFICATIONS AND DESIGNS. THESE IDEAS, DESIGNS, SPECIFICATION, DETAILS AND PLANS ARE NOT TO BE COPIED OR CHANGED IN ANY MANNER OR FORM WHAT-SOEVER, NOR ARE THEY TO BE ASSIGNED TO ANY THIRD PARTY WITHOUT FIRST OBTAINING THE EXPRESS WRITTEN PERMISSION FROM INGENOTECH CONSULTING ENGINEERS,PLLC

(4) CONDENSATE DRAIN PIPING:

(A) CONDENSATE DRAIN PIPING SHALL BE GALVANIZED SCHEDULE 40 OR P.V.C. FROM HVAC ON ROOF AND OTHER EQUIPMENT UNLESS STATED OTHERWISE.

(B) CONTRACTOR SHALL FURNISH AND INSTALL MIN. 1" COPPER CONDENSATE DRAINS ON COOLER/FREEZER EVAPORATOR COILS, WITH TRAP ASSEMBLY AND 2" AIR GAP ABOVE DRAIN AS SHOWN ON THE DRAWINGS. FREEZER CONDENSATE PIPING SHALL BE WRAPPED WITH HEAT TAPE WITH A MINIMUM RATING OF 10 WATTS PER LINEAL FOOT FOR ITS ENTIRE LENGTH WITHIN THE FREEZER COMPARTMENT.

(5) INDIRECT WASTE PIPING: SHALL BE TYPE "L" COPPER WITH 95/5 SWEAT SOLDER AND WROUGHT COPPER FITTINGS (SEE PLUMBING PLAN FOR REQUIREMENTS) UNLESS OTHERWISE INDICATED.

(6) NATURAL GAS PIPING:

(A) GAS PIPING INCLUDING TAP AND SERVICE SHALL BE INCLUDED. COORDINATE METER LOCATION WITH LOCALAUTHORITY.

(B) UNDERGROUND GAS PIPING SHALL BE SCHEDULE 40 BLACK STEEL PIPE WITH LONG RADIUS STEEL WELDING FITTINGS. PROTECT PIPE AND FITTINGS WITH TRANTEX WRAPPING TAPE APPLIED IN ACCORDANCE WITH THE MANUFACTURER'S RECOMMENDATION. OTHER TYPE OF PIPE PROTECTION OF EQUIVALENT QUALITY WILL BE OPTIONAL WITH THIS CONTRACTOR. INSTALLATION OF GAS SERVICE PIPING AND MATERIAL SHALL MEET WITH LOCAL GAS COMPANY'S APPROVAL.

(C) GAS PIPING ABOVE GROUND SHALL BE SCHEDULE 40 BLACK STEEL WITH 125 LB. BLACK MALLEABLE IRON SCREWED FITTINGS AND SUPPORTED AT INTERVALS NOT TO EXCEED 8'-0" AND AT EACH CHANGE IN HORIZONTAL OR VERTICAL DIRECTION. GAS PIPING COMPOUND AT JOINTS SHALL BE IN COMPLIANCE WITH NFPA BULLETIN NO. 54 AND LOCAL APPLICABLE CODES AND SUITABLE FOR NATURAL GAS SERVICE.

(D) GAS PIPING SHALL SUPPLY , WATER HEATER AND KITCHEN EQUIPMENT IF INDICATED ON ICE DRAWINGS BY THIS CONTRACTOR.
(E) MOISTURE TRAPS SHALL BE INSTALLED ON EACH PIPING DROP FOR WATER HEATER AND KITCHEN EQUIPMENT.
(F) ALL SUPPORTS SHALL BE PIPING SHALL BE PROVIDED WITH SUPPORT IN ACCORDANCE WITH SECTION 407 AND 415 FBCFG (8th EDITION).

(7) STORM DRAIN LEADER: SAME AS SOIL, WASTE & VENT PIPING.

(8) INSULATION

(A) ALL WATER PIPES, RAIN LEADERS AND ETC., SHALL BE INSULATED. PIPING SHALL BE INSULATED TO PREVENT EXCESSIVE HEAT LOSS, CONDENSATION AND SWEATING. ALL PIPES RUNNING IN UNCONDITIONED SPACE SHALL BE PROTECTED AGAINST FREEZING. ALL PIPING SHALL BE INSULATED WITH AT LEAST 1" THICK FOAM INSULATION HAVING A CONDUCTIVITY NOT EXCEEDING 0.28 BTU PER INCH/H xSQ.FT PER FBCEC (8th EDITION) SECTION 504.5 AND 607.2.1 AS MANUFACTURED BY ARMSTRONG ARMAFLEX OR APPROVED EQUAL AS INDICATED ON PLANS AND NOTES. AS MUCH OF THE INSULATION AS POSSIBLE SHALL BE SLIPPED ON TO THE PIPING AS THE PIPING IS BEING CONNECTED IN ORDER TO AVOID CUTTING THE INSULATION. ALL BUTT ENDS AND ANY NECESSARY LONGITUDINAL JOINTS SHALL BE SEALED WITH RUBBER BASED ADHESIVE.

7. FIXTURES

A. SEE ICE DRAWINGS FOR SPECIFICATIONS.

8. FLASHINGS

A. ALL PIPING AND VENTS PASSING THROUGH ROOF SHALL BE FLASHED WATERTIGHT WITH SIX POUND TO THE SQUARE FOOT LEAD USING SLEEVE FLASHING WITH BASE EXTENDING AT LEAST 12 INCHES IN EACH DIRECTION BEYOND THE OUTSIDE DIAPHRAGM OF THE PIPE. TURN SLEEVE DOWN A MINIMUM OF 1-1/2" INTO TOP OF VENT PIPE WITH LEAD FITTING SNUGLY INSIDE OF PIPE. ALL GAS VENT CAPS SHALL BE FITTED WITH LEAD FITTING SNUGLY INSIDE OF PIPE. ALL VENT CAPS SHALL BE VANDAL PROOF. VERIFY APPROVED FLASHING MATERIAL AND METHODS WITH ROOFING CONTRACTOR TO ENSURE A COMPLETE JOB. SEE DETAILS ON ARCH. SHEETS.

INGENOTECH CONSULTING ENGINEERS,PLLC HEREBY RESERVES ITS COMMON LAW COPYRIGHTS AND OTHER COPYRIGHTS IN THE PLANS, IDEAS, DETAILS, SPECIFICATIONS AND DESIGNS. THESE IDEAS, DESIGNS, SPECIFICATION, DETAILS AND PLANS ARE NOT TO BE COPIED OR CHANGED IN ANY MANNER OR FORM WHAT-SOEVER, NOR ARE THEY TO BE ASSIGNED TO ANY THIRD PARTY WITHOUT FIRST OBTAINING THE EXPRESS WRITTEN PERMISSION FROM INGENOTECH CONSULTING ENGINEERS,PLLC

9. CLEANOUTS

A. SEE INGENOTECH DRAWINGS FOR SPECIFICATIONS.

10. EQUIPMENT

A. WATER HEATER: FURNISHED, INSTALLED BY PLUMBING CONTRACTOR.

(1) SIZE, CAPACITY, TYPE AND MANUFACTURER AS INDICATED BY INGENOTECH DRAWINGS.

(2) N/A
(3) THE WATER HEATER, GAS OR ELECTRIC, SHALL BE PROVIDED WITH ALL TEMPERATURE AND SAFETY CONTROLS INCLUDING ASME AND ANSI Z21.22 RATED TEMPERATURE CONFORM TO ASSE1070 AND PRESSURE RELIEF VALVE, GAS PRESSURE REGULATOR (IF REQUIRED), DRAIN VALVE, EXPANSION TANK, ETC.

(4) PLUMBER SHALL MAKE WATER, GAS AND RELIEF LINE CONNECTIONS WITH CUTOFF VALVES AND DIELECTRIC UNIONS IN WATER AND GAS LINES.

B. VALVES, COCKS AND FAUCETS

(1) UNLESS SPECIFICALLY INDICATED ELSEWHERE, THE VALVES SHALL BE DESIGNED FOR NOT LESS THAN 160 LBS. WORKING PRESSURE AND SHALL COMPLY WITH SECTION 605 OF 6TH EDITION FBCP 2023. THE VALVES SHALL HAVE SUITABLE VALVE BODY PATTERNS FOR CONNECTION TO THE PIPE FOR WHICH THEY WILL OPERATE. ALL VALVES WITH RISING STEMS SHALL HAVE BACK SEATS FOR PACKING UNDER PRESSURE. ALL VALVES AND CONNECTIONS SHALL BE CONSTRUCTED WITH MATERIAL COMPLY WITH LEAD CONTENT STANDARD PER SECTION 605.2 6TH EDITION OF FBCP (8th EDITION). APPROVED EQUAL GATE VALVES AND CHECK VALVES AS MANUFACTURED BY STOCKHAM, WALWORTH, LUNKENHEIMER, SCOTT, HAMMOND, CRANE OR WATTS WILL BE ACCEPTABLE.

(2) GATE VALVES SHALL BE OF AN APPROVED TYPE AND COMPATIBLE WITH THE TYPE OF PIPING MATERIAL INSTALLED IN THE SYSTEM. ALL VALVES INTENDED TO SUPPLY DRINKING WATER SHALL MEET THE REQUIREMENTS OF NSF 61.

(3) CUTOFF VALVES UNDERNEATH LAVATORIES, TANK TYPE WATER CLOSETS, SANITARY SINKS AND WATER COOLERS SHALL BE CHROME PLATED ANGLE STOP VALVES WITH SOFT ANNEALED CHROME PLATED COPPER CONNECTION PIPES AND CHROME PLATED ESCUTCHEON PLATES.

(4) GAS COCKS FOR ALL EQUIPMENT: SEE ICE DRAWINGS FOR REQUIREMENTS.
(5) WATER CUTOFF VALVE SHALL BE OF AN APPROVED TYPE AND COMPATIBLE WITH THE TYPE OF PIPING MATERIAL INSTALLED IN SYSTEM. ALL VALVES INTENDED TO SUPPLY DRINKING WATER SHALL MEET THE REQUIREMENTS OF NSF61.

(6) EXTERIOR HOSE COCKS AND VALVE FIXTURES TO BE NON-FREEZE TYPE. SUPPLY SHUT-OFF VALVES IF INDICATED ON PLANS.

11. EXECUTION

A. PIPING

1. ALL PIPING SHALL BE RUN CONCEALED EXCEPT WHERE SHOWN OTHERWISE ON ICE DRAWINGS.
2. VALVES, TRAPS, CLEANOUTS AND OTHER APPARATUS SHALL BE INSTALLED IN AN EASILY ACCESSIBLE LOCATION.
3. SOIL, WASTE LINES 2-1/2" AND SMALLER SHALL SLOPE 1/4 INCH PER LINEAL FOOT AND 3" to 6" SHALL SLOPE 1/8 INCH PER LINEAL FOOT IN DIRECTION OF FLOW PER FBCP TABLE 704.1, UNLESS OTHERWISE INDICATED OR REQUIRED BY LOCAL CODES.
4. HOT AND COLD WATER LINES SHALL BE AT LEAST 6" APART WHERE PIPING IS PARALLEL.
5. ALL WATER LINES SHALL BE RUN OVERHEAD AND DOWN PARTITION WALLS UNLESS NO WALL IS PROVIDED; THEN RUN LINES UNDER SLAB TO POINT OF TERMINATION. ALL LINES SHALL BE CONCEALED UNLESS NOTED OTHERWISE ON PLANS.

B. HANGERS AND SUPPORTS

1. COPPER PIPING SHALL BE SUPPORTED AT INTERVALS NOT TO EXCEED 7'-0" AND AT EACH CHANGE IN HORIZONTAL OR VERTICAL DIRECTION. HANGERS SHALL BE FEE & MASON PLASTIC COATED HANGER, FIG. 381 OR APPROVED EQUAL BY GRINNELL. HANGER ATTACHMENT TO STRUCTURE SHALL BE AS REQUIRED. HORIZONTAL SUPPORTS FOR PIPING SHALL WILL BE IN ACCORDANCE TO SECTION 308 OF THE FBCP (8th EDITION).
2. GAS PIPING SHALL BE SUPPORTED AT INTERVALS NOT TO EXCEED 8'-0" AND AT EACH CHANGE IN HORIZONTAL OR VERTICAL DIRECTION. STEEL PIPE HANGERS SHALL BE GRINNELL FIG. 104 OR FEE & MASON FIG. 199. ATTACHMENT TO STRUCTURE TO BE AS REQUIRED. HORIZONTAL SUPPORT FOR PIPING WILL BE IN ACCORDANCE TO SECTION 407 AND 415 OF FBCFG (8th EDITION).
3. HANGER RODS SHALL BE STANDARD BOLT STEEL WITH MACHINE SCREW THREADS, 3/8" DIAMETER MINIMUM.
4. ALL PIPING UNDERGROUND SHALL BE FIRMLY BEDDED ON THE BODY OF THE PIPE, AND BELL HOLES PROVIDED AT EACH BELL. ALL PIPING SHALL BE INSTALLED IN GRADED TRENCH. EXCAVATE, BACKFILL AND SUPPORT PIPING AS HEREIN BEFORE SPECIFIED.
5. FINISHED
   5.1 INDOOR FINISHES
   5.1.1 HANGERS AND CLAMPS FOR SUPPORT OF BARE COPPER PIPING SHALL BE COATED WITH COPPER COLORED EPOXY PAINT, B-LINE DURA-COPPER®. ADDITIONAL PVC COATING OF THE EPOXY PAINTED HANGER SHALL BE USED WHERE NECESSARY.
   5.1.2 HANGERS FOR OTHER THAN BARE COPPER PIPE SHALL BE ZINC PLATED IN ACCORDANCE WITH ASTM B633 OR SHALL HAVE AN ELECTRO-DEPOSITED GREEN EPOXY FINISH, B-LINE DURA-GREEN®.
   5.1.3 STRUT CHANNELS SHALL BE PRE-GALVANIZED IN ACCORDANCE WITH ASTM A653 SS GRADE 33 G90 OR HAVE AN ELECTRO-DEPOSITED GREEN EPOXY FINISH, B-LINE DURA-GREEN®.
   5.2 OUTDOOR AND CORROSIVE AREA FINISHES
   5.2.1 HANGERS AND STRUT LOCATED OUTDOORS SHALL BE HOT DIP GALVANIZED AFTER FABRICATION IN ACCORDANCE WITH ASTM A123. ALL HANGER HARDWARE SHALL BE HOT DIP GALVANIZED OR STAINLESS STEEL. ZINC PLATED HARDWARE IS NOT ACCEPTABLE FOR OUTDOOR OR CORROSIVE USE.
   5.2.2 HANGERS AND STRUT LOCATED IN CORROSIVE AREAS SHALL BE TYPE 304 [316] STAINLESS STEEL WITH STAINLESS STEEL HARDWARE.

C. PLUMBING FIXTURES

1. FURNISH AND INSTALL ALL PLUMBING FIXTURES COMPLETE WITH ALL EQUIPMENT FITTINGS, TRIMMINGS AND ACCESSORIES, AS SPECIFIED. OPEN FRONT SEATS WITH NO COVERS AS MANUFACTURED BY CHURCH WILL BE ACCEPTABLE.
2. ALL FIXTURES SHALL BE GRADE A. THE NAME OR TRADE MARK OF THE MANUFACTURER SHALL BE PRINTED OR PRESSED ON ALL CLOSETS AND LAVATORIES, AND A LABEL, WHICH CANNOT BE REMOVED WITHOUT DESTROYING IT, CONTAINING THE MANUFACTURER'S NAME OR TRADEMARK AND THE QUALITY OR CLASS OF THE FIXTURES, SHALL BE AFFIXED TO ALL FIXTURES AND NOT REMOVED UNTIL AFTER THE WORK HAS BEEN ACCEPTED.
3. EXPOSED PIPING TO FIXTURES SHALL BE A PRODUCT OF THE FIXTURE MANUFACTURER OR APPROVED EQUAL AND SHALL BE:
   A. WATER: CHROMIUM PLATED IRON PIPE SIZE RED BRASS.
   B. WASTE: CHROMIUM PLATED TUBING, EXCEPT WASTE CONNECTIONS TO KITCHEN OR SCULLERY SINKS AS NECESSARY.
4. STOPS AS MANUFACTURED BY THE FIXTURE MANUFACTURER, WITH METAL-TO-METAL SEAT, SHALL BE PROVIDED FOR ALL FIXTURES AND EQUIPMENT. REFER TO SCHEDULE ON ICE DRAWINGS FOR MANUFACTURER'S AND MODEL NUMBERS USED AS GUIDE SPECIFICATIONS. NUMBERS AS LISTED REPRESENT THE COMPLETE WORKABLE OUTFITS WITH ALL BRASS TRIM AS.
5. FIXTURES SHALL BE WHITE UNLESS OTHERWISE NOTED.
6. FIXTURES FURNISHED BY THIS CONTRACTOR OR BY THE OWNER SHALL BE FITTED WITH NECESSARY WATER SUPPLIES, STOPS AND TRAPS WITH CLEANOUT PLUGS UNDER THIS SECTION OF THE SPECIFICATIONS.

D. TESTS

THE PERMIT HOLDER SHALL MAKE THE APPLICABLE TEST PRESCRIBE IN SECTIONS 312.2 THROUGH 312.10 TO DETERMINE COMPLIANCE WITH THE PROVISIONS OF FBCP (8th EDITION). ALL PLUMBING SYSTEM PIPING SHALL BE TESTED WITH EITHER WATER OR, FOR PIPING SYSTEM OTHER THAN PLASTIC, BY AIR.

E. CLEANING AND PROTECTION

1. THE CONTRACTOR SHALL REMOVE FROM THE JOB SITE ALL DEBRIS AND LEFTOVER MATERIALS FOR WHICH HE IS RESPONSIBLE, CLEAN ALL FIXTURES AND EQUIPMENT AND REPAIR ANY BLEMISHES IN THE FINISH. THE CONTRACTOR SHALL BE HELD RESPONSIBLE FOR REPLACING FIXTURES WHERE DAMAGE RESULTS FROM FAILURE TO PROVIDE PROTECTION DURING INSTALLATION.
2. FLUSH OUT PIPES: AFTER THE PLUMBING PIPING HAS BEEN INSTALLED, INSPECTED AND APPROVED, THE PIPING SYSTEM SHALL BE FLUSHED TO REMOVE ANY FOREIGN MATTER FROM THE PIPES WITH CHLORINE OR HTH SOLUTION TO SANITIZE THE NEW PIPING OR AS REQUIRED BY THE LOCAL AUTHORITIES PER SECTION 610 FBCP (8th EDITION).

F. MAINTENANCE

1. ALL PARTS OF THE PLUMBING FIXTURES AND ASSOCIATED EQUIPMENT SHALL BE MAINTAINED BY THE CONTRACTOR THROUGHOUT THE GUARANTEE PERIOD. ONE MONTH AFTER FINAL ACCEPTANCE OF THE BUILDING BY THE OWNER, THE CONTRACTOR SHALL GO OVER ALL THE FIXTURES AND TEST ALL WORKING PARTS AND PUT EVERYTHING IN GOOD WORKING ORDER. ALL FIXTURES, INCLUDING TRAPS, SHALL BE THOROUGHLY CLEANED AND ALL PARTS PUT IN GOOD WORKING ORDER.

1. PLUMBING CONTRACTOR IS REQUIRED TO CLEAN THE DRAIN LINES PRIOR TO TURN OVER
3. PLUMBING CONTRACTOR SHALL PROVIDE REDUCED PRESSURE BACK FLOW PREVENTION DEVICE ON THE MAIN DOMESTIC PIPING CONFORM TO SECTION 608 FBCP (8th EDITION).
4. CONTRACTOR SHALL PROVIDE BACK FLOW PREVENTION DEVICE FOR DISHWASHER, ICE MAKER AND SODA MACHINE PER FBCP (8th EDITION) SECTION 608. FOR D.W. APPROVED BY ASSE 1001, FOR ICE MAKER APPROVED BY ASSE 1024 AND FOR SODA MACHINE SHALL BE APPROVED BY ASSE 1022.

APPLICABLE CODES/STANDARDS:

- FLORIDA BUILDING CODE – BUILDING (8th EDITION)
- FLORIDA BUILDING CODE – MECHANICAL (8th EDITION)
- FLORIDA BUILDING CODE – PLUMBING (8th EDITION)
- FLORIDA BUILDING CODE – ENERGY CONSERVATION (8th EDITION)
- FLORIDA FIRE PREVENTION CODE (8th EDITION)
- NATIONAL ELECTRIC CODE (2019)
- NFPA LATEST EDITION.

GENERAL NOTES

1. IT IS THE RESPONSIBILITY OF THE PLUMBING CONTRACTOR TO REVIEW THE PLUMBING PLANS AND WRITTEN SPECIFICATIONS TO BECOME FAMILIAR WITH THE FULL SCOPE OF WORK. IN ADDITION, THIS CONTRACTOR SHALL COORDINATE WITH AN OWNER PRESENTATIVE TO FULLY UNDERSTAND ANY REQUIREMENTS NOT SPECIFIED HEREIN WHICH MAY CONSIDER PART OF THIS CONTRACT. THE PLUMBING CONTRACTOR SHALL VISIT THE SITE AND NOTE ALL EXISTING
2. ANY EQUIPMENT IN THE KITCHEN AREA THAT NEEDS FILTERED, PURIFIED, OR DISTILLED WATER SHALL BE IDENTIFIED BY OWNER OR KITCHEN DESIGNER. FILTERS, PURIFIER OR R.O. SYSTEM SPECIFICATIONS AND CUT SHEETS SHALL BE PROVIDED AND SPECIFIED IN PLAN BY OWNER OR KITCHEN DESIGNER. PLUMBING CONTRACTOR SHALL REVIEW PLANS FOR FILTRATION SYSTEM AND COORDINATE WITH OWNER TO FULLY UNDERSTAND ANY REQUIREMENTS OF THE SYSTEM AND LOCATIONS THAT NEED TO BE SERVED. FOR ANY DISCREPANCIES OR ADDITIONAL LOCATIONS NOT SHOWN IN PLAN, CONTRACTOR SHALL NOTIFY THE ENGINEER FOR CORRECTION OF THE PLANS. ANY REQUIREMENTS NOT SPECIFIED HERE WITHIN MAY BE CONSIDER PART OF THE PLUMBER'S CONTRACT.
3. CONDITIONS, AS WELL AS ALL CONDITIONS TO BE MET. LACK OF THOROUGH UNDERSTANDING SHALL NOT CONSTITUTE AN EXCUSE FOR ERRORS OR OMISSIONS, NOR FOR A REQUEST FOR EXTRA COMPENSATION.
4. THE CONTRACTOR FOR THIS WORK SHALL CAREFULLY INSPECT AND ACQUAINT HIMSELF WITH EXISTING CONDITIONS IN ORDER THAT HE FULLY UNDERSTANDS THE WORK REQUIRED. HE SHALL FIELD MEASURE AND VERIFY ALL DIMENSIONS AND CONDITIONS BEFORE PROCEEDING WITH THE WORK.
5. ALL PLUMBING INSTALLATIONS SHALL CONFORM WITH THE FBCP (8th EDITION). INSTALLATION OF GAS PIPING EQUIPMENT AND COMPONENTS WILL CONFORM TO FBCFG (8th EDITION).
6. PIPING LAYOUTS ARE DIAGRAMMATIC AND INTEND TO SHOW GENERAL ARRANGEMENT, SIZE AND CAPACITY. ALL OFFSETS ARE NOT NECESSARILY SHOWN. CONTRACTOR SHALL ARRANGE AND COORDINATE THE WORK, FURNISH NECESSARY OFFSETS, VALVES, VENTS AND FITTINGS TO AVOID CONFLICTS WITH OTHER MECHANICAL AND ELECTRICAL SERVICES AND WITH STRUCTURAL AND ARCHITECTURAL ELEMENTS.
7. PLUMBING CONTRACTOR'S WORK SHALL INCLUDE ALL WORK AS INDICATED ON THESE ICE DRAWINGS.
8. ALL TEMPERD WATER PIPING SHALL MAINTAIN A MINIMUM TEMPERATURE OF 110°F. HOT WATER OF 140°F FOR DISHWASHER AND (3) COMP.SINKS.
9. COORDINATE ALL PIPING ROUTING WITH WORK OF OTHER TRADES PRIOR TO INSTALLATION.
10. VERIFY INVERT ELEVATIONS AND EXACT LOCATIONS OF SEWERS TO WHICH NEW SEWER LINES ARE TO BE CONNECTED BEFORE INSTALLATION.
11. INSTALL ISOLATION VALVES AT EACH DOMESTIC WATER BRANCH TAKEOFF AND INSTALL UNION AT EACH PIECE OF EQUIPMENT, FIXTURE AND APPLIANCE SERVICE POINT CONNECTION. PER FBCP (8th EDITION) SECTION 606.1 AND 606.2.
12. INSTALL PRESSURE REDUCING VALVES ON BRANCH LINES SERVING FIXTURES AND/OR EQUIPMENT, WHEN WATER PRESSURE EXCEEDS 60 PSI.
13. ANY EQUIPMENT IN THE KITCHEN THAT NEEDS FILTERED, PURIFIED, OR DISTILLED WATER SHALL BE IDENTIFIED BY OWNER AND KITCHEN DESIGNER. FILTERS, PURIFIER OR RO SYSTEM SPECIFICATIONS AND CUT SHEETS SHALL BE PROVIDED AND SPECIFY IN PLAN BY OWNER OR KITCHEN DESIGNER. THE PLUMBER CONTRACTOR SHALL REVIEW PLANS AND SPECIFICATIONS FOR FILTRATION SYSTEM AND COORDINATE WITH OWNER TO FULLY UNDERSTAND ANY REQUIREMENTS OF THE SYSTEM. FOR ANY DISCREPANCIES OR ADDITIONAL LOCATION, THE CONTRACTOR SHALL NOTIFY THE ENGINEER FOR CORRECTION OF THE PLANS. ANY REQUIREMENTS NOT SPECIFIED HERE WITHIN MAY BE CONSIDER PART OF THE PLUMBER'S CONTACT.
14. INGENOTECH CONSULTING ENGINEERS,PLLC HEREBY RESERVES ITS COMMON LAW COPYRIGHTS AND OTHER COPYRIGHTS IN THE PLANS, IDEAS, DETAILS, SPECIFICATIONS AND DESIGNS. THESE IDEAS, DESIGNS, SPECIFICATION, DETAILS AND PLANS ARE NOT TO BE COPIED OR CHANGED IN ANY MANNER OR FORM WHAT-SOEVER, NOR ARE THEY TO BE ASSIGNED TO ANY THIRD PARTY WITHOUT FIRST OBTAINING THE EXPRESS WRITTEN PERMISSION FROM INGENOTECH CONSULTING ENGINEERS,PLLC

1 P101 PLUMBING SPECIFICATIONS
NOT TO SCALE

Cabral Engineering Inc
Engineering – Consulting – Project Management
1058 Palm Cove Dr, Orlando, FL 32835
(321) 246 – 4041 C.A. No. 33227
CEI Project # 22.63

This item has been electronically signed & sealed by Farshad Anirkchi, PE on the date and/or time stamp shown using a digital signature. Printed copies of this document are not considered signed &sealed and, the signature must be verified on any electronic copies with Engineer of record.

ARCHITECTURE + ENGINEERING
License No. AA26000 License No. CA30900
1230 Oakley Seaver Drive, Suite 200 - Clermont, FL 34711
P: 888-850-FFAE (3323)
www.forefrontae.com
FOREFRONT
Service Beyond Design

FARSHAD ANIRKCHI No. 72996 STATE OF FLORIDA PROFESSIONAL ENGINEER

REVISION
1

AGING FACILITY
22174 US HIGHWAY 331 N PAXTON FL32567
PLUMBING SPECIFICATIONS

ANY DISCREPANCY OR ERROR IN DIMENSIONS OR NOTES SHALL BE BROUGHT TO THE ATTENTION OF THE ENGINEER/ARCHITECT FOR CLARIFICATION PRIOR TO COMMENCEMENT OF CONSTRUCTION.

JOB #: 21-17-357
DATE: 07/17/2023
P101

© FOREFRONT ARCHITECTURE & ENGINEERING LLC 2014 THIS DOCUMENT AND/OR THE DESIGN CONCEPTS EXPRESSED HEREIN ARE THE PROPERTY OF FOREFRONT ARCHITECTURE & ENGINEERING LLC AND ALL RIGHTS OF OWNERSHIP, INCLUDING COPYRIGHT OF INTELLECTUAL PROPERTY, ARE RESERVED. ANY REPRODUCTIONS, COPYING, OR USE OF THIS DOCUMENT AND/OR THE DESIGN CONCEPT WITHOUT THE WRITTEN CONSENT OF FOREFRONT ARCHITECTURE & ENGINEERING LLC IS STRICTLY PROHIBITED AND PROTECTED BY UNITED STATES AND INTERNATIONAL LAW. IF PRINTED ON 11X17 SCALE IS HALF THE SIZE NOTED.

PLUMBING REFERENCE NOTES

(ALL NOTES SHOWN ARE NOT NECESSARILY USED ON THE DRAWINGS)

1. PIPING LOCATED AT OR ABOVE CEILING.
2. PIPING LOCATED BELOW FLOOR SLAB.
3. PIPING LOCATED IN WALL AND RUN TO CONNECT TO FIXTURE(S).
4. PIPING DROP AND RUN IN WALL.
5. WATER PIPING RISE FROM BELOW GRADE, OFFSET INTO WALL ABOVE FLOOR SLAB IN WALL, RISE TO ABOVE CEILING.
6. BUILDING SERVICE WATER SHUT-OFF VALVE IN RECESSED VALVE BOX WITH REMOVABLE ACCESS COVER FLUSH WITH GRADE OR PAVEMENT.
7. PROVIDE SHUTOFF VALVE REQUIRED PER SECTION 606.1 AND 606.2 OF FBC-PLUMBING.
8. SANITARY WASTE PIPING BELOW GRADE. REFER TO CIVIL SITE DRAWING FOR CONTINUATION.
9. WATER PIPING BELOW GRADE. REFER TO CIVIL SITE DRAWING FOR CONTINUATION.
10. NEW REDUCED PRESSURE PRINCIPAL BACK-FLOW PREVENTION ASSEMBLY(R.P.) SHALL BE INSTALLED ON WATER PIPE. PER FBCP SECTION 608. FIELD VERIFY LOCATION. SEE CIVIL DRAWINGS FOR SPECIFICATIONS.
11. PROVIDE CLEAN OUT AT EACH BRANCH, ACCESSIBLE WITH SAME SIZE OF WASTE LINE CONNECTED TO.
12. HOT WATER PIPE DROPS TO FAUCET CONNECTION AND COMES BACK TO THE CEILING TO MEET REQUIREMENT OF FBC-EC SECTION C404.5.1.

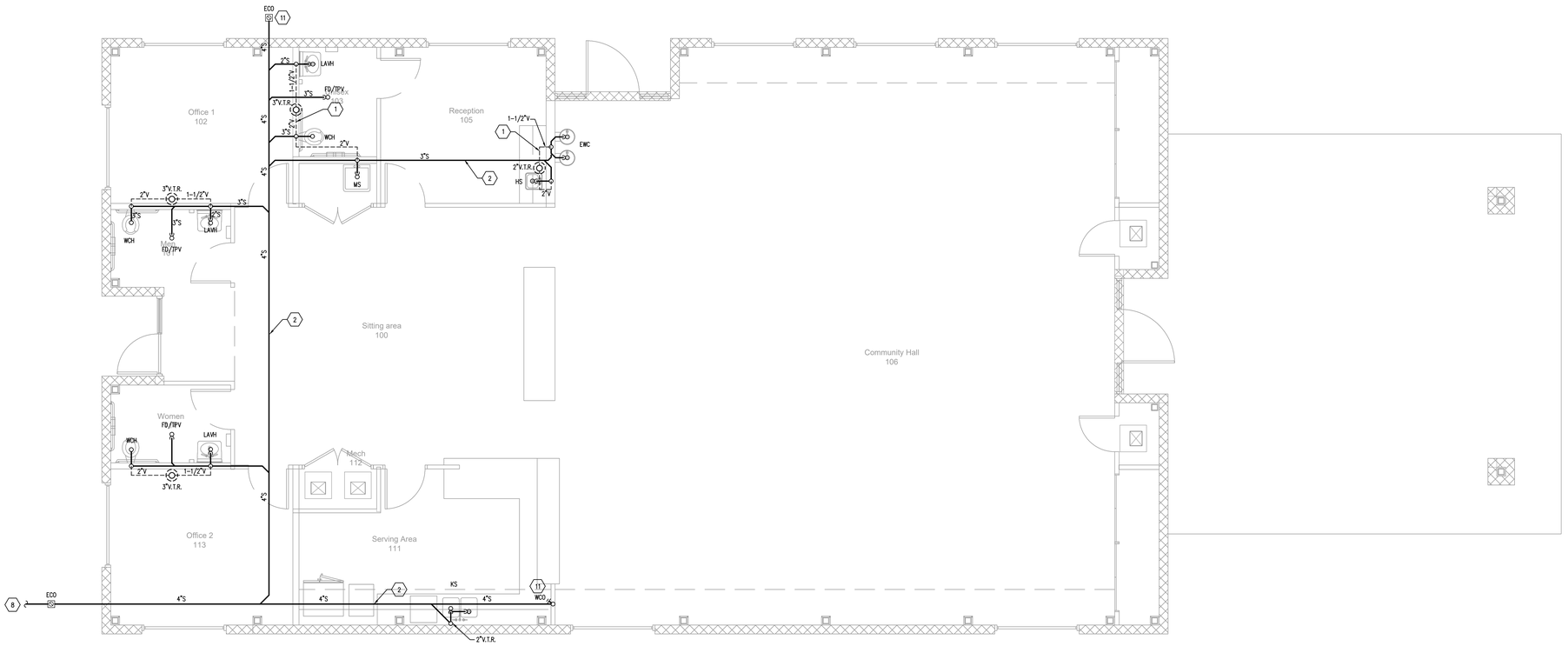

1 P200 PLUMBING FLOOR PLAN – SANITARY

SCALE: 1/4"=1'-0"

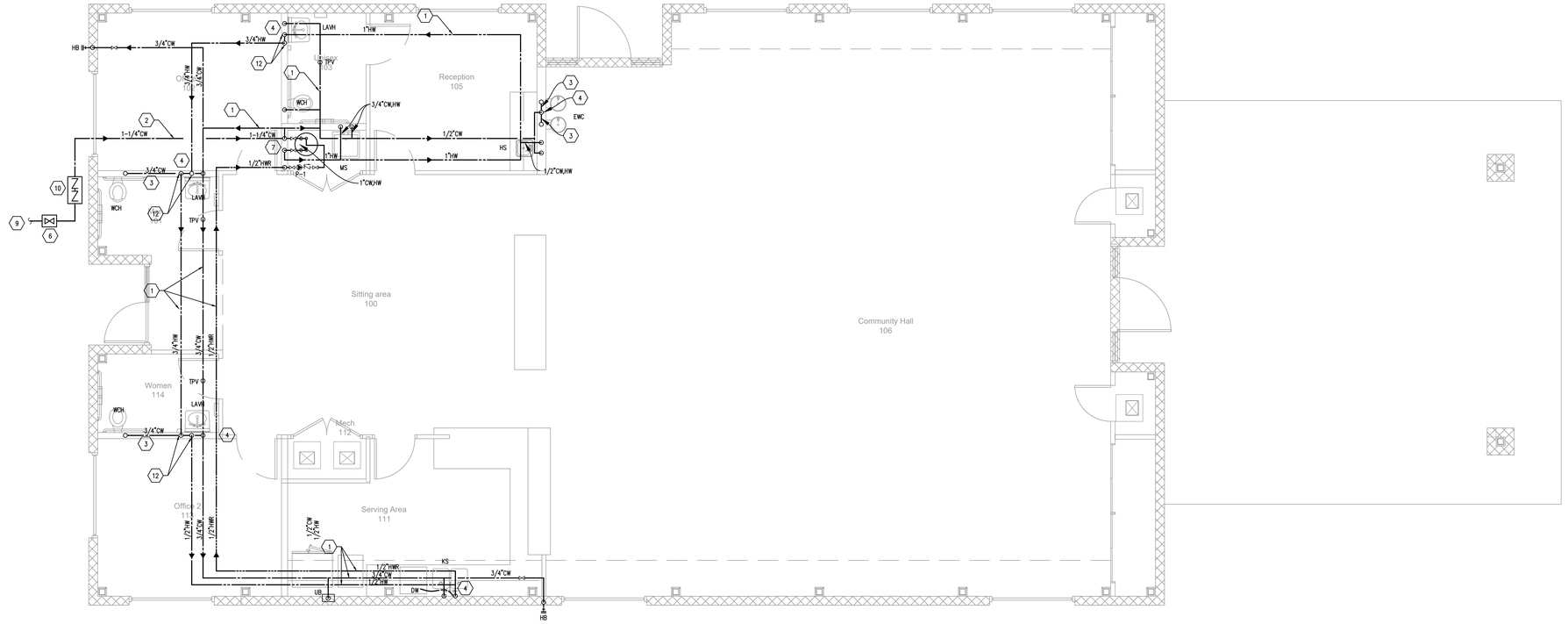

2 P200 PLUMBING FLOOR PLAN – WATER

SCALE: 1/4"=1'-0"

This item has been electronically signed & sealed by **Farshad Ashtiani, PE** on the date and/or time stamp shown using a digital signature. Printed copies of this document are not considered signed &sealed and, the signature must be verified on any electronic copies with Engineer of record.

REVISION

ARCHITECTURE + ENGINEERING
License No. AR98800
FOREFRONT
Service Beyond Design
License No. CA30900
1230 Oakley Seaver Drive, Suite 200 - Clermont, FL 34711
P: 888-850-FFAE (3323)
www.forefrontae.com

FARSHAD ASHTIANI
LICENSE
No. 72996
STATE OF
FLORIDA
PROFESSIONAL
ENGINEER

AGING FACILITY

22174 US HIGHWAY 331 N PAXTON FL32567

PLUMBING FLOOR PLAN - SANITARY / WATER

ANY DISCREPANCY OR ERROR IN DIMENSIONS OR NOTES SHALL BE BROUGHT TO THE ATTENTION OF THE DESIGN PROFESSIONAL FOR CLARIFICATION PRIOR TO CONSTRUCTION OF THE AFFECTED WORK.

JOB #: 23-17267
DATE: 07/16/2024

P200

Cabral Engineering Inc
Engineering – Consulting – Project Management
1058 Palm Cove Dr, Orlando, FL 32835
(321) 246 – 4041 C.A. No. 33227
CEI Project # 22.63

C:\13-ICS- Projects\23\23172\23172-3003- Senior Center-Francisco\Working MEP\MEP DWGs\~P3\23624-New Code\23172-3003-Plumbing- Plot Date: Tuesday, May 28, 2024,4:57:26 PM, Plotted By: usmep

© FOREFRONT ARCHITECTURE & ENGINEERING LLC 2014 THIS DOCUMENT AND/OR THE DESIGN CONCEPTS EXPRESSED HEREIN ARE THE PROPERTY OF FOREFRONT ARCHITECTURE & ENGINEERING LLC AND ALL RIGHTS OF OWNERSHIP, INCLUDING COPYRIGHT OF INTELLECTUAL PROPERTY, ARE RESERVED. ANY REPRODUCTIONS, COPYING, OR USE OF THIS DOCUMENT AND/OR THE DESIGN CONCEPT WITHOUT THE WRITTEN CONSENT OF FOREFRONT ARCHITECTURE & ENGINEERING LLC IS STRICTLY PROHIBITED AND PROTECTED BY UNITED STATES AND INTERNATIONAL LAW. IF PRINTED ON 11x17 SCALE IS HALF THE SIZE NOTED.

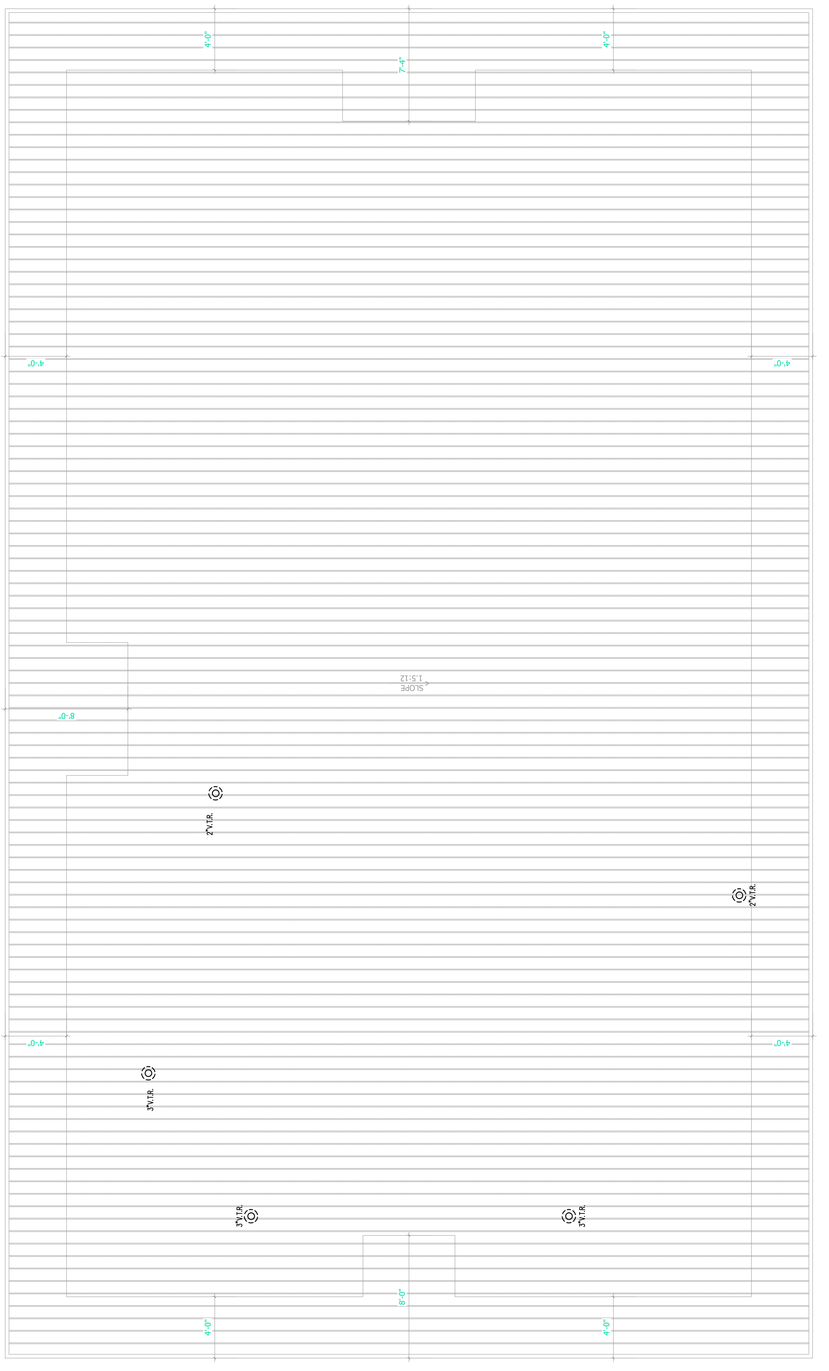

1 P201 PLUMBING ROOF PLAN

SCALE: 1/4"=1'-0"

Cabral Engineering Inc

Engineering — Consulting – Project Management
1888 Sawgrass Corporate Pkwy, Suite 203
(321) 246-0431 Orlando, FL 32837
CEI Project # 22.63

ISSUE DATE	2/17/2023
SCALE	AS SHOWN
SHEET #	P201

ANY UNAUTHORIZED USE, SALE & REPRODUCTION OF THIS PLAN IS PROHIBITED BY THE AUTHORSHIP OF ARCHITECTURAL WORKS COPYRIGHT PROTECTION ACT, 1990.

AGING FACILITY

22174 US HIGHWAY 331 N PAXTON FL32567

PLUMBING ROOF PLAN

FOREFRONT
Service Beyond Design

ARCHITECTURE + ENGINEERING
License No. AR93800 License No. CA30900

1230 Oakley Seaver Drive, Suite 200 - Clermont, FL 34711
P: 888-850-FFAE (3323)
www.forefrontae.com

REVISION

This item has been electronically signed & sealed by **Farshad Ashrafi, PE** on the date and/or time stamp shown using a digital signature. Printed copies of this document are not considered signed &sealed and, the signature must be verified on any electronic copies with Engineer of record.

© 2021 THIS DOCUMENT AND/OR THE DESIGN CONCEPTS EMBODIED HEREIN ARE THE PROPERTY OF FOREFRONT ARCHITECTURE & ENGINEERING LLC AND ALL RIGHTS OF OWNERSHIP, INCLUDING COPYRIGHT OF INTELLECTUAL PROPERTY, ARE RESERVED. ANY REPRODUCTION, COPYING, OR USE OF THIS DOCUMENT AND/OR THE DESIGN CONCEPT WITHOUT THE WRITTEN CONSENT OF FOREFRONT ARCHITECTURE & ENGINEERING LLC IS STRICTLY PROHIBITED AND PROTECTED BY UNITED STATES AND INTERNATIONAL LAW. IF PRINTED ON 11X17 SCALE IS HALF THE SIZE NOTED.

C:\1-EC Projects\2022\2022023 Senior Center Promise\Working\REVIT\REVIT 2022\2022023 Plumbing_Rev1.rvt, Date: Tuesday, May 28, 2024 4:37:28 PM, Plotted By: cyeap

PLUMBING REFERENCE NOTES
(ALL NOTES SHOWN ARE NOT NECESSARILY USED ON THE DRAWINGS)

1. PIPING LOCATED AT OR ABOVE CEILING.
2. PIPING LOCATED BELOW FLOOR SLAB.
3. PIPING LOCATED IN WALL AND RUN TO CONNECT TO FIXTURE(S).
4. PIPING DROP AND RUN IN WALL.
5. WATER PIPING RISE FROM BELOW GRADE, OFFSET INTO WALL ABOVE FLOOR SLAB IN WALL, RISE TO ABOVE CEILING.
6. BUILDING SERVICE WATER SHUT-OFF VALVE IN RECESSED VALVE BOX WITH REMOVABLE ACCESS COVER FLUSH WITH GRADE OR PAVEMENT.
7. PROVIDE SHUTOFF VALVE REQUIRED PER SECTION 608.1 AND 608.2 OF FBC-PLUMBING.
8. SANITARY WASTE PIPING BELOW GRADE. REFER TO CIVIL SITE DRAWING FOR CONTINUATION.
9. WATER PIPING BELOW GRADE. REFER TO CIVIL SITE DRAWING FOR CONTINUATION.
10. NEW REDUCED PRESSURE PRINCIPAL BACK-FLOW PREVENTION ASSEMBLY(R.P.) SHALL BE INSTALLED ON WATER PIPE. PER FBCP SECTION 608. FIELD VERIFY LOCATION. SEE CIVIL DRAWINGS FOR SPECIFICATIONS.
11. PROVIDE CLEAN OUT AT EACH BRANCH, ACCESSIBLE WITH SAME SIZE OF WASTE LINE CONNECTED TO.
12. HOT WATER PIPE DROPS TO FAUCET CONNECTION AND COMES BACK TO THE CEILING TO MEET REQUIREMENT OF FBC-EC SECTION C404.5.1.

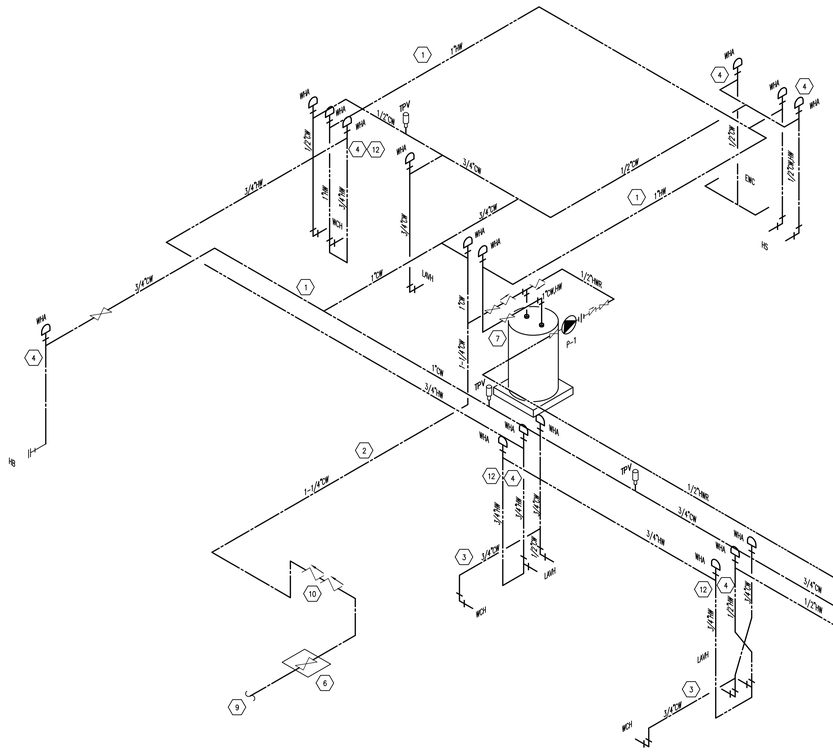

2 P300 PLUMBING RISER DIAGRAM – WATER
NOT TO SCALE

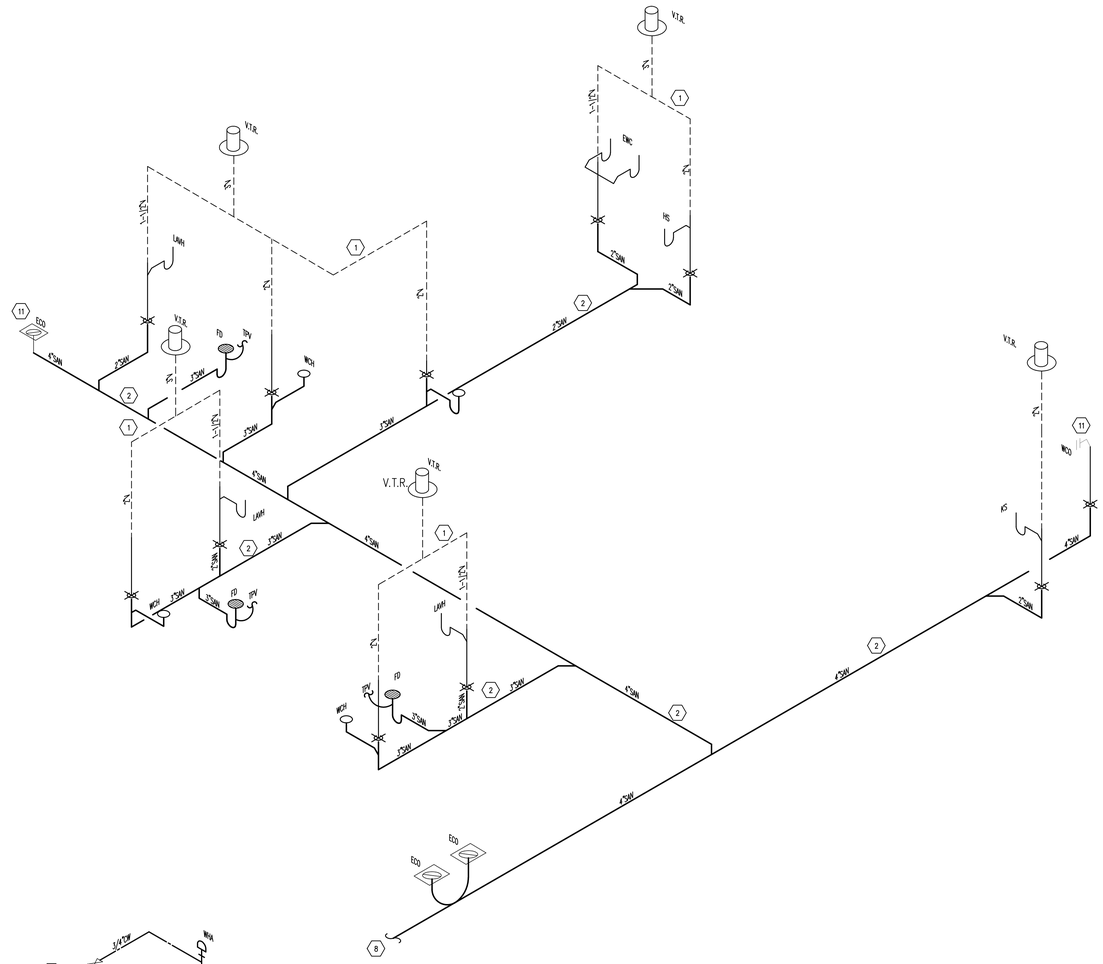

1 P300 PLUMBING RISER DIAGRAM –SANITARY
NOT TO SCALE

This item has been electronically signed & sealed by **Farshad Ashtiani, PE** on the date and/or time stamp shown using a digital signature. Printed copies of this document are not considered signed &sealed and, the signature must be verified on any electronic copies with Engineer of record.

REVISION
1

ARCHITECTURE + ENGINEERING
License No. AR98800 License No. CA30900
1230 Oakley Seaver Drive, Suite 200 - Clermont, FL 34711
P: 888-850-FFAE (3323)
www.forefrontae.com

FOREFRONT
Service Beyond Design

FARSHAD ASHTIANI LICENSE No. 72996 STATE OF FLORIDA PROFESSIONAL ENGINEER

AGING FACILITY
22174 US HIGHWAY 331 N PAXTON FL32567
PLUMBING RISER DIAGRAM - SANITARY / WATER

Cabral Engineering Inc
Engineering – Consulting – Project Management
1058 Palm Cove Dr, Orlando, FL 32835
(321) 246 – 4041 C.A. No. 33227
CEI Project # 22.63

ANY DISCREPANCY OR ERROR IN DIMENSIONS OR NOTES SHALL BE BROUGHT TO THE ATTENTION OF THE ENGINEER OF RECORD FOR CLARIFICATION PRIOR TO COMMENCEMENT OF CONSTRUCTION.

JOB #: 21-17-057
DATE: 07/17/2023
P300

C:\1-ECE- Projects\ECE2021\ECE2053- Senior Center-Francisco\Working MEP\MEP DWGs\1-052824-New Code\ECE2053-Plumbing; Plot Date: Tuesday, May 28, 2024,4:57:29 PM; Plotted By: usmep

© FOREFRONT ARCHITECTURE & ENGINEERING LLC 2014 THIS DOCUMENT AND/OR THE DESIGN CONCEPTS EXPRESSED HEREIN ARE THE PROPERTY OF FOREFRONT ARCHITECTURE & ENGINEERING LLC AND ALL RIGHTS OF OWNERSHIP, INCLUDING COPYRIGHT OF INTELLECTUAL PROPERTY, ARE RESERVED. ANY REPRODUCTIONS, COPYING, OR USE OF THIS DOCUMENT AND/OR THE DESIGN CONCEPT WITHOUT THE WRITTEN CONSENT OF FOREFRONT ARCHITECTURE & ENGINEERING LLC IS STRICTLY PROHIBITED AND PROTECTED BY UNITED STATES AND INTERNATIONAL LAW. IF PRINTED ON 11X17 SCALE IS HALF THE SIZE NOTED.

PLUMBING FIXTURE SCHEDULE

ITEM	MODEL #	DESCRIPTION
TPV		FRESH WATER TRAPE PRIMER VALVE
	MR-500-NPB	MIFAB PRESSURE DROP ACTIVATED TRAP SEAL PRIMER
	MI-DU-625	MIFAB TAP SEAL PRIMER DISTRIBUTION UNIT
FD		FLOOR DRAIN
	30003-5A-Y	JOSAM COMPANY CAST IRON ADJUSTABLE FLOOR DRAIN
WCH		WATER CLOSET/ADA WATER CLOSET (FLUSH TANK TYPE)
	K-5298-0	HIGHLINE COMFORT HEIGHT TWO-PIECE ELONGATED 1.0 GPF TOILET WITH STANDARD LEFT OR RIGHT HAND POLISHED CHROME TROP LEVEL
	ML1055	MAINLINE PLASTIC COMMERCIAL ELONGATED TOLIET SEAT
	C02-011	JONES STEPHENS CORP. CLOSET BOLT KIT
LAVH		ADA LAVATORY
	K-1997-4-0	KOHLER BRENHAM WALL MOUNTED BATHROOM SINK
	K-1998-0	KOHLER BRENHAM SHROUD
	SLOAN-2450	SLOAN TOUCHLESS FAUCET W/SENSOR, BATTERY POWERED 0.5 GPM
	MLB120AF	MAINLINE SS BRAIDED FLEXIBLE SUPPLY
	MLQTCR19CX	MAINLINE CHROME PLATED STOPS
	P9704BG	DEARBORN BRASS PLASTIC TUBULAR P-TRAP
WCO		WALL CLEANOUT
	58910	JOSAM COMPANY CLEANOUT
WHA		WATER HAMMER ARRESTERS
	6508660	SIOUX CHIEF PISTON TYPE
TMV		THERMOSTATIC MIXING
	CHICAGO FAUCETS 122-NF SERIES-THREE PORT (FOR KITCHEN HAND WASHING FIXTURES)	PRE-PIPED BRONZE, CAPABLE OF ADJUSTMENT WITH MIXED OUTLET TEMPERATURE RANGE OF 80° F TO 110° F. PROVIDE SHUT-OFF CHECK VALVES, STRAINER AND THERMOMETER. SET FINAL OUTLET TEMP. AT 105°F, 1" INLET, 1" OUTLET, MAX. 12 GPM @ 10 PSI DROP.
KS		KITCHEN DOUBLE BOWL SINK
	ELUH3118PD	ELKAY LUSTERTONE CLASSIC SS DOUBLE BOWL UNDERMONT SINK W/PERFECT DRAIN
	K-10415	KOHLER FORTE SINGLE HANDLE KITCHEN SINK FAUCET
	MLB120AF	MAINLINE SS BRAIDED FLEXIBLE SUPPLY
	MLQTCR19CX	MAINLINE CHROME PLATED STOPS
	P9704BG	DEARBORN BRASS PLASTIC TUBULAR P-TRAP
UB		ICE MAKER UTILITY BOX
	39121 OR 39122	OATEY STANDARD / FIRE RATED ICE MAKER OUTLET BOX WITH 1/4 TURN BRASS BALL VALVE AND WATER HAMMER ARRESTOR FOR COPPER OR CPVC
EWC		ELECTRIC WATER COOLER
	LMABFTL8SC	ELKAY LMABFTL8SC WALL MOUNT MECHANICAL ACTIVATION BI-LEVEL ADA COOLER FILTERED REFRIGERATED STAINLESS, MOUNTING BRACKET, PROVIDE P-TRAP, SUPPLY STOP AND WALL ESCUTCHEON.
	MLB120AF	MAINLINE SS BRAIDED FLEXIBLE SUPPLY
	MLQTCR19CX	MAINLINE CHROME PLATED STOPS
	P9704BG	DEARBORN BRASS PLASTIC P-TRAP
HS		HAND SINK
	HS-1615IH	ATLANTA CULINARY EQUIPMEN STAINLESS STEEL DROP-IN HAND SINK, 20 GAUGE TYPE 304 STAINLESS STEEL WITH SPECIAL POLISHED SATIN FINISHDIMENSION 16"WX15"LX14"H
	8948	MOEN COMMERCIAL DOUBLE HANDLE BAR WRISTBLADE TYPE, M-BITION COLLECTION W/CHROME PLATED METAL CONSTRUCTION 1.2 GPM
	MLB120AF	MAINLINE SS BRAIDED FLEXIBLE SUPPLY
	MLQTCR19CX	MAINLINE CHROME PLATED STOPS
	P9704BG	DEARBORN BRASS PLASTIC TUBULAR P-TRAP
	TMV	PROVIDE AS SPECIFIED
HB		EXTERIOR HOSE BIB
	WOODFORD 17	FREEZE LESS SILLCOCK THAT WILL NOT RUPTURE WHEN THE FAUCET IS SHUT-OFF AND THE HOSE IS REMOVED. PROVIDE VACUUM BREAKER / ANTI-SIPHON BACKFLOW PREVENTION DEVICE. AN ANTI-SIPHON BACKFLOW PREVENTION DEVICE PROTECTS THE FAUCET FROM ANY POTENCIAL BACK PRESSURE AND CONTAMINATED WATER FLOWING BACK INTO THE MAIN LINE.
MS		MOP SINK
	BKMS-2424-12	BK RESOURCE SS FLOOR MOUNTED MOP SINK
	XD-141-RC	MAINLINE CENTURION TWO HANDLE WALL MOUNT FAUCET
	B-3940	T&S BRASS ROTARY WASTE VALVE W/TWIST HANDLE
	ML710	MAINLINE P-TRAP W/CLEANOUT

SCHEDULE PROVIDED TO ESTABLISH LEVEL OF STANDARD AND SPECIFICATION. FINAL SELECTIONS BY OWNER / ARCHITECT . PLUMBING CONTRACTOR SHALL CONSIDER AN ALLOWANCE DURING BID PROCESS . NO SUBSTITUTION ARE ALLOWED WITHOUT APPROVAL BY OWNER / ARCHITECT.

WATER SHOCK ARRESTOR SIZING CHART

(BASED ON SOUIX CHIEF HYDRA-RESTOR)

NO.FIXTURE UNITS	MODEL NO.	UNIT SIZE	CONNECTION SIZE	LOCATION	REMARKS
1-11	652-A	A	1/2"	CONTRACTOR TO LOCATE IN FIELD	LOCATE AT HIGH POINTS
12-32	653-B	B	3/4"	CONTRACTOR TO LOCATE IN FIELD	LOCATE AT HIGH POINTS

HOT WATER RETURN PUMP SCHEDULE

TAG NO.	MANUFACTURE & MODEL No.	TYPE	CASING	LOCATION	SERVICE	HEAD FT	GPM	ELEC. DATA						WORKING PROGRAM		REMARK
								RPM	WATT	MAX.C.A	VOLT	PH	HZ	SUMMER	WINTER	
P-1	TACO 0012-MSSF2-IFC	IN LINE	ST.STEEL	BACK ROOM	H.W.R	12	8	3250	195	1.65	115	1	60	RUN	RUN	① ②

NOTE: ① RUN ② OR SIMILAR MANUFACTURE

ELECTRICAL WATER HEATER EQUIPMENT SCHEDULE

TAG NO.	MANUFACTURER	LOCATION AREA	MODEL NUMBER	BTUH INPUT	GPH 90° RISE	GALLONS STORAGE	CONNECTION SIZES		VOLTS/PH-FLA	INPUT KW	SHIPPING WEIGHT (LBS)	REMARKS
							INLET	OUTLET				
EWH	BRADFORD	STORAGE	RE250T6	15345	50	50 GALS.	3/4"	3/4"	208/1-21.6	4.5	130	61" HEIGHT 20" DIAM.

NOTES:

1. SEE INSTALLATION DETAIL.
2. SET STORAGE TEMP AT 140°F
3. PROVIDE EWH W/THERMAL EXPANSION TANK AND PRESS. RELIEF VALVE INDIRECTLY OVER FLOOR DRAIN
4. TMV SHALL BE PROVIDED FOR EACH HAND WASHING STATION SEPERATLY.

1 P400 PLUMBING FIXTURE SCHEDULE

NOT TO SCALE

Cabral Engineering Inc
Engineering – Consulting – Project Management
1058 Palm Cove Dr, Orlando, FL 32835
(321) 246 – 4041 C.A. No. 33227
CEI Project # 22.63

This item has been electronically signed & sealed by **Farshad Ashkchi, PE** on the date and/or time stamp shown using a digital signature. Printed copies of this document are not considered signed &sealed and, the signature must be verified on any electronic copies with Engineer of record.

ARCHITECTURE + ENGINEERING
License No. AR98980 License No. CA30900
1230 Oakley Seaver Drive, Suite 200 - Clermont, FL 34711
P: 888-850-FFAE (3323)
www.forefrontae.com
FOREFRONT
Service Beyond Design

REVISION

1

FARSHAD ASHKCHI LICENSE No. 72956 STATE OF FLORIDA PROFESSIONAL ENGINEER

AGING FACILITY

22174 US HIGHWAY 331 N PAXTON FL32567

PLUMBING FIXTURE SCHEDULE

ANY DISCREPANCY OR ERROR IN DIMENSIONS OR NOTES SHALL BE BROUGHT TO THE ATTENTION OF THE DESIGN PROFESSIONAL FOR CLARIFICATION PRIOR TO CONSTRUCTION.

JOB #: 23.17.267

DATE: 07/21/2023

P400

C:\3-ICS - Projects\ICS2023\ICS2353- Senior Center-Francisco\Working REPSHEP DWGs\1-PS2824-New Gold\ICS2353-Plumbing- Plot Date: Tuesday, May 28, 2024,4:57:30 PM, Plotted By: usmep

© FOREFRONT ARCHITECTURE & ENGINEERING LLC 2014 THIS DOCUMENT AND/OR THE DESIGN CONCEPTS EXPRESSED HEREIN ARE THE PROPERTY OF FOREFRONT ARCHITECTURE & ENGINEERING LLC AND ALL RIGHTS OF OWNERSHIP, INCLUDING COPYRIGHT OF INTELLECTUAL PROPERTY, ARE RESERVED. ANY REPRODUCTIONS, COPYING, OR USE OF THIS DOCUMENT AND/OR THE DESIGN CONCEPT WITHOUT THE WRITTEN CONSENT OF FOREFRONT ARCHITECTURE & ENGINEERING LLC IS STRICTLY PROHIBITED AND PROTECTED BY UNITED STATES AND INTERNATIONAL LAW. IF PRINTED ON 11X17 SCALE IS HALF THE SIZE NOTED.

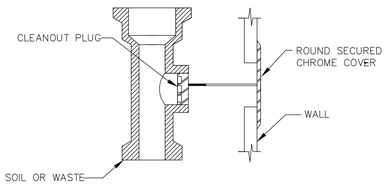

WALL CLEANOUT ZURN Z-1441 WITH SMOOTH ACCESS COVER
FLOOR CLEANOUT ZURN Z-1444 WITH ROUND ACCESS COVER

1 P500 WALL CLEANOUT (WCO) DETAIL
N.T.S

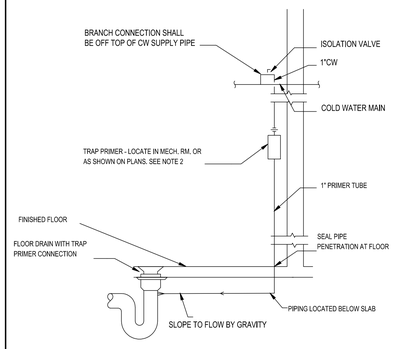

2 P500 TRAP PRIMER DETAIL
N.T.S

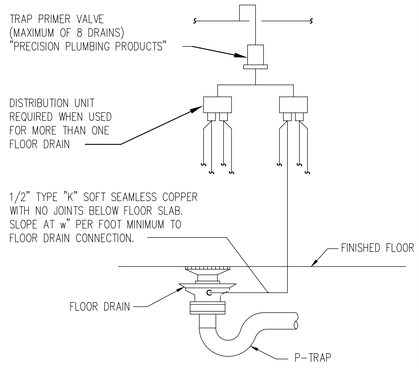

3 P500 TRAP PRIMER DETAIL
N.T.S

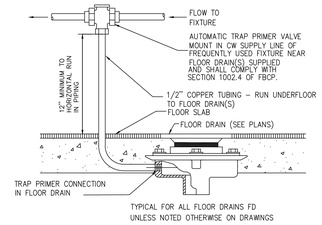

NOTES:
1.TRAP PRIMER SHALL ONLY BE USED TO SERVE SINGLE TRAP. PROVIDE DISTRIBUTION UNIT WHERE MORE THAN ONE TRAP IS SERVED BY TRAP PRIMER.
2.IN FINISHED AREA, ROUTE PIPING WITHIN WALL AND LOCATE TRAP PRIMER ABOVE ACCESSIBLE CEILING.
3.ALL INACCESSIBLE PIPING, SUCH AS PIPING BE LOW FLOOR, SHALL BE SOFT COPPER WITHOUT JOINTS. ALL OTHER PIPING SHALL BE HARD COPPER WITH SOLDER JOINTS.

4 P500 TRAP PRIMER CONNECTION DETAIL
N.T.S

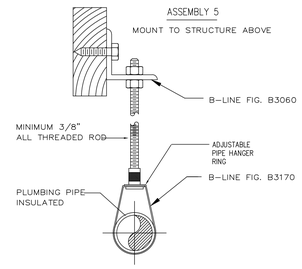

5 P500 PIPE HANGER DETAIL
N.T.S

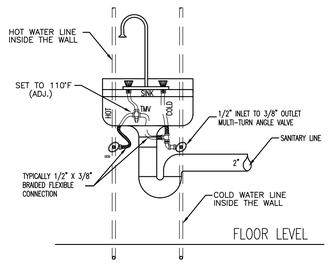

6 P500 LAVATORY PIPING DETAIL WITH TMV
N.T.S

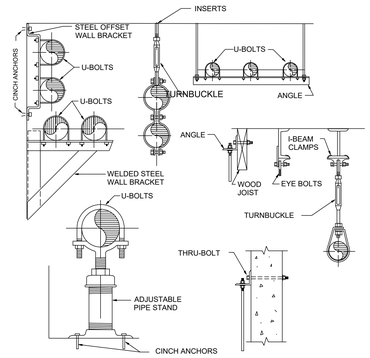

7 P500 TYPICAL PIPE SUPPORT DETAIL
N.T.S

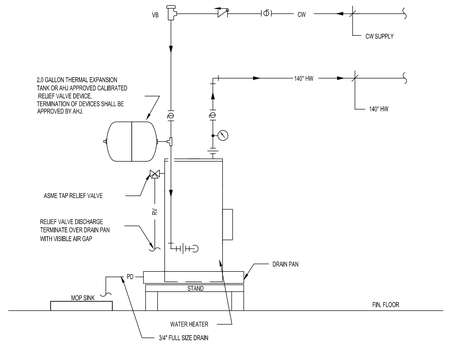

8 P500 WATER HEATER DETAIL
N.T.S

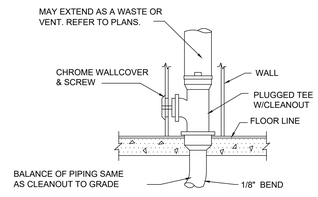

9 P500 WALL CLEANOUT DETAIL(W.C.O)
N.T.S

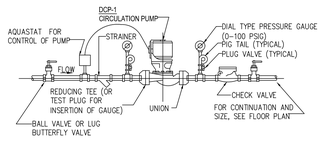

10 P500 IN-LINE CIRCULATING PUMP
N.T.S

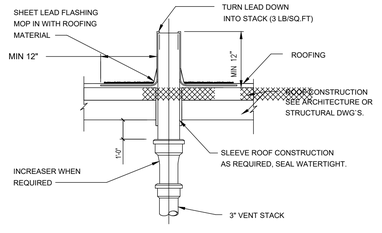

11 P500 VENT THRU ROOF DETAIL(VTR)

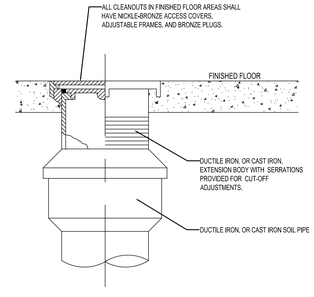

12 P500 CLEAN OUT DETAIL(F.C.O)

X P500 PLUMBING DETAILS
SCALE: NOT TO SCALE

Cabral Engineering Inc
Engineering – Consulting – Project Management
1058 Palm Cove Dr, Orlando, FL 32835
(321) 246 – 4041 C.A. No. 33227
CEI Project # 22.63

This item has been electronically signed & sealed by Farshad Anirkchi, PE on the date and/or time stamp shown using a digital signature. Printed copies of this document are not considered signed &sealed and, the signature must be verified on any electronic copies with Engineer of record.

FOREFRONT Service Beyond Design
ARCHITECTURE + ENGINEERING
License No. AA26000
License No. AR98980
1230 Oakley Seaver Drive, Suite 200 - Clermont, FL 34711
P: 888-850-FFAE (3323)
www.forefrontae.com

FARSHAD ANIRKCHI STATE OF FLORIDA No. 72996 PROFESSIONAL ENGINEER

REVISION
1

AGING FACILITY
22174 US HIGHWAY 331 N PAXTON FL32567
PLUMBING DETAILS

ANY DISCREPANCY OR ERROR IN DIMENSIONS OR NOTES SHALL BE BROUGHT TO THE ATTENTION OF THE DESIGN PROFESSIONAL FOR CLARIFICATION PRIOR TO COMMENCEMENT OF CONSTRUCTION.

JOB # : 21-17367
DATE: 07/17/2024

P500

C:\1-SCE- Projects\2023\23233S- Senior Center-Francisco\Working MEP\MEP DWGs\1-052824-New Code\23233S3-Plumbing; Plot Date: Tuesday, May 28, 2024,4:57:31 PM; Plotted By: usmep
© FOREFRONT ARCHITECTURE & ENGINEERING LLC 2014 THIS DOCUMENT AND/OR THE DESIGN CONCEPTS EXPRESSED HEREIN ARE THE PROPERTY OF FOREFRONT ARCHITECTURE & ENGINEERING LLC AND ALL RIGHTS OF OWNERSHIP, INCLUDING COPYRIGHT OF INTELLECTUAL PROPERTY, ARE RESERVED. ANY REPRODUCTIONS, COPYING, OR USE OF THIS DOCUMENT AND/OR THE DESIGN CONCEPT WITHOUT THE WRITTEN CONSENT OF FOREFRONT ARCHITECTURE & ENGINEERING LLC IS STRICTLY PROHIBITED AND PROTECTED BY UNITED STATES AND INTERNATIONAL LAW. IF PRINTED ON 11X17 SCALE IS HALF THE SIZE NOTED.

DIVISION 26 - ELECTRICAL SPECIFICATIONS

GENERAL ELECTRICAL REQUIREMENTS

A. THE COMPLETE ELECTRICAL INSTALLATION SHALL COMPLY WITH THE LATEST ADOPTED EDITION OF THE FOLLOWING CODES & STANDARDS:
1. NFPA 13 STANDARD FOR THE INSTALLATION OF SPRINKLER SYSTEMS.
2. NFPA 20 STANDARD FOR THE INSTALLATION OF CENTRIFUGAL FIRE PUMPS.
3. NFPA 37 STANDARD FOR THE INSTALLATION AND USE OF STATIONARY COMBUSTION ENGINES AND GAS TURBINES.
4. NFPA 70 NATIONAL ELECTRICAL CODE 2020 ED.
5. NFPA 72 NATIONAL FIRE ALARM CODE.
6. NFPA 780 LIGHTNING PROTECTION CODE.
7. NFPA 90A STANDARD TO THE INSTALLATION OF AIR CONDITIONING AND VENTILATING SYSTEMS.
8. NFPA 96 STANDARD FOR VENTILATION CONTROL AND FIRE PREVENTION OF COMMERCIAL COOKING OPERATIONS.
9. NFPA 101 LIFE SAFETY CODE.
10. NFPA 110 STANDARD FOR EMERGENCY AND STANDBY POWER SYSTEMS.
11. ANSI A17.1 ELEVATOR CODE.
12. ANSI A117.1 ACCESSIBILITY CODE.
13. FLORIDA AMERICANS WITH DISABILITIES ACCESSIBILITY IMPLEMENTATION ACT AS DESCRIBED IN ACCESSIBILITY REQUIREMENTS MANUAL, DEPARTMENT OF COMMUNITY AFFAIRS.
14. AMERICANS WITH DISABILITIES ACT.
15. FLORIDA BUILDING CODE 2020.
16. FLORIDA FIRE PREVENTION CODE 2020 ED.

B. 'FURNISH AND INSTALL' AND 'PROVIDE' ARE EQUIVALENT TERMS WHICH INDICATE MATERIAL AND/OR EQUIPMENT SUPPLIED AND INSTALLED BY THIS CONTRACTOR. 'FURNISHED' DENOTES MATERIAL OR EQUIPMENT SUPPLIED BUT NOT INSTALLED BY THIS CONTRACTOR. 'INSTALLED' DENOTES THE SETTING IN POSITION OR CONNECTION OF MATERIAL OR EQUIPMENT BY THIS CONTRACTOR BUT SUPPLIED BY OTHERS.

C. IT IS THE REQUIREMENT OF THESE CONTRACT DOCUMENTS TO HAVE THE CONTRACTOR PROVIDE SYSTEMS AND COMPONENTS THAT ARE FULLY COMPLETE AND OPERATIONAL AND FULLY SUITABLE FOR THE INTENDED USE.

D. DRAWINGS ARE DIAGRAMMATIC AND SHOULD NOT BE SCALED TO DETERMINE EXACT LOCATIONS. VERIFY ALL LOCATIONS A REQUIREMENTS OF EQUIPMENT FURNISHED AND/OR INSTALLED BY OTHERS BEFORE ROUGHING IN.

E. ELECTRICAL SYSTEMS SHALL BE INSTALLED AS A COMPLETE INSTALLATION. INCIDENTAL DETAILS NOT USUALLY SHOWN OR SPECIFIED, BUT NECESSARY FOR PROPER INSTALLATION AND OPERATION SHALL BE INCLUDED IN THE WORK OF THIS CONTRACTOR.

F. PRE-BID SURVEY.
1. THIS CONTRACTOR SHALL SURVEY THE JOBSITE PRIOR TO SUBMITTING THEIR BID TO DETERMINE THE FOLLOWING:
a. AREAS REQUIRING DEMOLITION, TEMPORARY POWER, RELOCATING, ETC. WHICH ARE INADVERTENTLY NOT SHOWN ON THE DRAWINGS.
b. PROBLEMS WITH WORK SEQUENCE.
2. ANY UNUSUAL CONDITIONS NOT SHOWN ON THE DRAWINGS SHALL BE REPORTED TO THE ENGINEER PRIOR TO BIDDING.

G. ACCEPTABLE MANUFACTURERS: THE LISTING OF A MANUFACTURER AS "ACCEPTABLE" UNDER ANY DIVISION 26 REQUIREMENTS DOES NOT IMPLY AUTOMATIC APPROVAL. IT IS THE SOLE RESPONSIBILITY OF THE CONTRACTOR TO ENSURE THAT ANY SUBMITTAL MADE ARE FOR PRODUCTS THAT MEET OR EXCEED THE SPECIFICATIONS INCLUDED HERE.

H. UPON COMPLETION OF THE WORK, BUT BEFORE FINAL ACCEPTANCE OF THE SYSTEM AND REQUEST FOR FINAL PAYMENT BEING MADE BY THE OWNER, FOR APPROVAL, OPERATION AND MAINTENANCE MANUALS IN LOOSE-LEAF BINDERS. PROVIDE A MINIMUM OF 6 SETS. MANUAL SHALL INCLUDE:
1. SUBMITTAL DATA STATING EQUIPMENT RATING AND OPTIONS FOR EACH PIECE OF EQUIPMENT REQUIRING MAINTENANCE.
2. OPERATION MANUALS AND MAINTENANCE MANUALS FOR EACH PIECE OF EQUIPMENT REQUIRING MAINTENANCE (CLEARLY IDENTIFIED).
3. NAMES AND ADDRESSES OF AT LEAST ONE QUALIFIED SERVICE AGENCY.
a. PROVIDE OWNER WITH A RECORD SET OF AS-BUILT DRAWINGS WITHIN 30 DAYS AFTER THE DATE OF SYSTEM ACCEPTANCE FROM A DESIGNATED MARKED-UP SET OF BLUELINES INCLUDING:
1. A SINGLE-LINE DIAGRAM OF THE BUILDING ELECTRICAL DISTRIBUTION SYSTEM AND
2. FLOOR PLANS INDICATING LOCATION AND AREA SERVED FOR ALL DISTRIBUTION.

I. PROVIDE TEMPORARY ELECTRICAL POWER TO JOBSITE FOR THE DURATION OF THE PROJECT.

J. SUBMIT SHOP DRAWINGS TO ARCHITECT FOR ALL ELECTRICAL ITEMS. THE SHOP DRAWINGS SHALL BE SUBMITTED COMPLETE FOR ALL ELECTRICAL ITEMS. INCOMPLETE SUBMITTALS WILL BE RETURNED WITHOUT BEING REVIEWED OR THE CONTRACTOR SHALL AGREE TO PAY THE ELECTRICAL ENGINEER DIRECTLY AT AN HOURLY RATE OF $135.00 TO REVIEW SUBSEQUENT SUBMITTALS. SHOP DRAWING RE-SUBMITTALS DUE TO REJECTIONS FOR NOT SUBMITTING THE SPECIFIED ITEMS ARE ALSO SUBJECT TO THE HOURLY REVIEW FEE.

K. PROVIDE 4" HIGH CONCRETE HOUSEKEEPING PADS FOR ALL FLOOR MOUNTED ELECTRICAL EQUIPMENT (SWITCHBOARDS, TRANSFORMERS, ETC.).

L. DIVISION 26 SUB-CONTRACTOR SHALL REVIEW DIVISION 15 SHOP DRAWINGS AND VERIFY EQUIPMENT VOLTAGE, PHASE AND AMPS PRIOR TO ROUGH-IN OF ALL EQUIPMENT.

M. ALL EQUIPMENT, DEVICES, ETC. FURNISHED BY ELECTRICAL CONTRACTOR SHALL BE U.L. LISTED (OR EQUIVALENT NATIONAL TESTING AGENCY) FOR IT'S INTENDED PURPOSE. INFORM OWNER THAT ALL OWNER FURNISHED EQUIPMENT, DEVICES, ETC. MUST ALSO HAVE A U.L. LISTING (OR EQUIVALENT LISTING).

N. ALL ELECTRICAL COMPONENTS (CONDUIT, WIRE, FITTINGS, SUPPORTS, CIRCUIT BREAKERS,LAMPS, ETC.) PROVIDED AND INSTALLED IN THIS PROJECT SHALL BE BRAND NEW. RE-USE OF EXISTING COMPONENTS WILL NOT BE APPROVED.

O. UTILITY COORDINATION (WHERE APPLICABLE): CONTRACTOR SHALL SUBMIT A COMPLETE SET OF CONSTRUCTION DOCUMENTS TO UTILITY COMPANY IMMEDIATELY AFTER RECEIVING NOTICE TO PROCEED OR PRIOR TO ANY SITE OR BUILDING ROUGH-IN. COORDINATE EASEMENT LOCATIONS BETWEEN OWNER AND UTILITY COMPANY. VERIFY WITH UTILITY COMPANY: PROPOSED VOLTAGE, PHASE, POLE/PAD-MOUNT TRANSFORMER LOCATIONS, METERING, UTILITY PRIMARY ROUTING AND CONDUIT REQUIREMENTS, ETC.

P. WHERE REQUIRED, AFFIX PERMANENT ARC-FLASH AND AVAILABLE FAULT CURRENT LABELS TO ALL APPLICABLE ELECTRICAL EQUIPMENT IN COMPLIANCE WITH 2014 NEC ARTICLE 110.

Q. PRIOR TO FINAL INSPECTION, CONTRACTOR SHALL PROVIDE FUNCTIONAL TESTING RESULTS SHOWING THAT LIGHTING SYSTEMS COMPLIES WITH FBC CHAPTER 4 SECTION C408.3.1

R. CONTRACTOR TO PROVIDE OWNER, WITHIN 90 DAYS, WITH CERTIFICATION THAT LIGHTING CONTROL SYSTEM MEETS FBC CHAPTER 4 SECTION C408.3.2

ELECTRICAL IDENTIFICATION

A. PROVIDE CABLE/CONDUCTOR IDENTIFICATION BANDS.
B. PROVIDE ENGRAVED PLASTIC LAMINATE SIGNS, WHITE LETTERING ON A BLACK BACKGROUND, FOR EACH UNIT OF THE FOLLOWING CATEGORIES OF ELECTRICAL WORK: SWITCHBOARDS, MOTOR STARTERS, TRANSFORMERS, PANELBOARDS, DISCONNECTS, AND JUNCTION BOXES. NAME PLATES SHALL IDENTIFY PANEL DESIGNATION (NAME), VOLTAGE, PHASE AND WIRE CONFIGURATION.
C. UNDERGROUND CABLE/CONDUIT IDENTIFICATION PLASTIC LINE MARKERS SHALL BE PROVIDED THE CONTINUOUS TRENCH LENGTH.

CONDUIT & RACEWAYS

A. MINIMUM SIZE CONDUIT SHALL BE 1/2".
B. CONDUIT SHALL BE MC CABLE, ELECTRICAL METALLIC TUBING, OR RIGID GALVANIZED STEEL CONDUIT SCHEDULE 40 PVC CONDUIT IS ALLOWED FOR CONDUITS N/UNDER THE SLAB AND UNDERGROUND.
C. ALL CONDUIT SHALL BE CONCEALED. CONDUIT SHALL BE EMT IN INTERIOR AREAS, AND RIGID GALVANIZED STEEL CONDUIT IN EXTERIOR AREAS.
D. COORDINATE ROUTING (LOCATION) OF CONDUIT WITH HVAC DUCTWORK, PLUMBING PIPING AND SPRINKLER PIPING.
E. SECURE CONDUIT IN PLACE WITH CORROSION-PROOF ALLOY STRAPS AT SPACING AS REQUIRED BY N.E.C. CONDUIT SHALL BE SECURED TO BUILDING STRUCTURE.
F. INSTALL FLEXIBLE STEEL CONDUIT NOT OVER 3' LONG TO MOTORS, TRANSFORMERS AND EQUIPMENT SUBJECT TO VIBRATION.
G. INSTALL LIQUID-TIGHT FLEXIBLE CONDUIT NOT OVER 3' LONG WHERE SUBJECT TO MOISTURE, DIRT OR FUMES.
H. TYPE MC CABLE SHALL BE OF THE INTERLOCKING JACKET TYPE. CABLE SHALL BE SUPPORTED AT NOT MORE THAN SIX-FOOT INTERVALS, AND ALL FITTINGS SHALL BE IDENTIFIED FOR USE WITH SAID CABLE.
I. CONTRACTOR SHALL MINIMIZE FLOOR SLAB PENETRATIONS.
J. ALL CONDUIT RUNS SHALL BE DESIGNED TO PRESENT A NEAT AND ORDERLY APPEARANCE.RUN LINES PARALLEL WITH BUILDING STRUCTURE OR WALLS.
K. ROOFTOP UNITS AND EXHAUST FANS ARE TO BE WIRED THROUGH THE ROOF CURBS OR UTILIZE FACTORY-FABRICATED ROOF PIPING CURBS. PITCH POCKETS ARE NOT ALLOWED.
L. ROMEX CABLE IS NOT PERMITTED.
M. CONDUIT SHALL BE ROUTED PERPENDICULAR THROUGH RATED WALLS. PROVIDE PROPER SLEEVES AND FIRE SAFING/SEALANTS.
N. PROVIDE UL APPROVED FIRE SEALS FOR ALL FIRE RATED WALL AND FLOOR PENETRATIONS.

WIRES, CABLES AND CONNECTORS

A. ALL CONDUCTORS IN "AIR-HANDLING" SPACES SHALL BE PLENUM-RATED.
B. ALL CONDUCTORS SHALL BE PLENUM-RATED. ALL CONDUCTORS SHALL BE COPPER WITH 600V 75°C WITH INSULATION SUITABLE FOR INSTALLATION ENVIRONMENT. WHERE INSTALLED BEYOND THE BUILDING CONFINES, SUCH AS IN UNDERGROUND FEEDER BANKS OR CIRCUITRY TO SITE LUMINARIES IT SHALL BE COPPER WITH 600V, 75°, XHHW-2 INSULATION.
C. USE SOLID CONDUCTOR, SINGLE CONDUCTOR, NO. 10 AWG MINIMUM FOR GENERAL USE WIRING.
D. USE STRANDED CONDUCTOR, SINGLE CONDUCTOR NO. 8 AWG AND LARGER, FOR MOTORS AND OTHER INSTALLATIONS WHERE VIBRATION IS GENERATED.
E. COLOR-CODING SHALL IDENTIFY THE SAME PHASE THROUGHOUT THE SYSTEM, FROM SERVICE SWITCH OR TRANSFORMER THROUGH ALL BRANCH CIRCUITRY. ALL WIRING SHALL BE COLOR-CODED AS FOLLOWS:

120/208/240 VOLT	480/277 VOLT
PHASE A-BLACK	PHASE A-BROWN
PHASE B-RED	PHASE B-ORANGE
PHASE C-BLUE	PHASE C-YELLOW
NEUTRAL-WHITE	NEUTRAL-WHITE TRACER OR GRAY

F. A STANDARD 500V MEGGER INSULATION TEST SHALL BE MADE AND RECORDED FOR ALL FEEDER CIRCUITS. PROVIDE A COPY OF TEST RESULTS TO ENGINEER FOR REVIEW.
G. PROVIDE LUGS FOR FEEDER SIZES INDICATED ON DRAWINGS OR AS REQUIRED.
H. WIRING FOR ALL ELECTRICAL CIRCUITS SHALL BE SIZED FOR A 3% MAXIMUM VOLTAGE DROP.
I. ALL TELECOMMUNICATIONS/DATA CABLING SHALL BE CAT 6.
J. ALL TELECOM/DATA CABLING AND ELEMENTS SHALL COMPLY THE OWNER'S TECHNOLOGY REQUIREMENTS. PRIOR TO BIDDING, CONTRACTOR SHALL CONSULT OWNER AND/OR ARCHITECT TO RECEIVE A COPY OF THE OWNERS TECHNOLOGY REQUIREMENT.

BOXES

A. WALL OUTLET BOXES SHALL BE 4 INCH SQUARE WITH A TOTAL DEPTH OF LESS THAN 2-1/2" GALVANIZED PRESSED STEEL WITH PLASTER RINGS OR GANG COVER, OR SIZED AS REQUIRED.
B. WHERE MORE THAN TWO SWITCHES OR DEVICES ARE LOCATED AT ONE POINT, USE GANGED BOXES AND COVERS.
C. ALL BOXES FOR ELECTRICAL EQUIPMENT SHALL HAVE COVERS.
D. DO NOT INSTALL BOXES BACK TO BACK OR THROUGH WALL. OFFSET OUTLET BOXES ON OPPOSITE SIDES OF WALL A MINIMUM OF 12" OR ON OPPOSITE SIDES OF STUD IN PARTITION WALLS. WHERE BACK TO BACK BOXES CANNOT BE AVOIDED, PROVIDE GYPSUM BOARD BETWEEN BOXES. PROVIDE PUTTY PADS ON ALL BOXES WHERE REQUIRED PER FBC 712.3.2.
E. IF A K.O. IS AVAILABLE IN THE BASE JUNCTION BOX, THEN NO TERMINATIONS ARE ALLOWED IN THE EXTENSION RINGS.

WIRING DEVICES

A. CONTRACTOR SHALL INSTALL TAMPER-RESTISTANT RECEPTACLES AS REQUIRED BY NEC 406.12.
B. WIRING DEVICES SHALL BE MANUFACTURED BY HUBBELL, BRYANT OR LEVITON.
C. RECEPTACLES SHALL BE HEAVY DUTY DUPLEX, 2 POLE, 3W, GROUNDING, 20A, 125V, DESIGNED FOR SIDE AND BACK WIRING.
D. RECEPTACLES NEXT TO DATA OUTLETS SHALL BE TVSS.
E. SWITCHES SHALL BE HEAVY DUTY SINGLE POLE AC QUIET SWITCHES, 20 A.
F. PROVIDE SMOOTH NYLON COVERS FOR ALL DEVICES.
G. DIMMERS SHALL BE OF A TYPE APPROPRIATE FOR THE LIGHT FIXTURES CONTROLLED.

MOTOR STARTERS

A. PROVIDE STARTER OF NEMA SIZE AND VOLTAGE RATING COMPATIBLE WITH MOTOR.
B. MANUFACTURERS SHALL BE G.E., SQUARE 'D' OR SIEMENS.
C. AC FRACTIONAL HORSEPOWER MANUAL STARTERS, 2 POLE, SIZE AND RATING AS REQUIRED. EQUIP WITH MANUALLY OPERATED TOGGLE-MECHANISMS; & WITH ONE PIECE, MELTING ALLOY TYPE THERMAL UNITS, GREEN PILOT LIGHT, & SWITCH CAPABLE OF BEING PAD-LOCKED OFF. ENCLOSE STARTER IN NEMA TYPE 1 ENCLOSURE. SQUARE 'D' TYPE 'F'.
D. MANUAL MOTOR STARTING SWITCHES, 2 POLE, TOGGLE TYPE WITHOUT OVERLOAD PROTECTION, SIZE, & RATING AS REQUIRED. NEMA 1 ENCLOSURE WITH SWITCH TOGGLE GUARD WITH OFF LOCK-OUT FEATURE, SQUARE 'D' TYPE 'K'.
E. MEGGER CHECK PHASE-TO-PHASE & PHASE-TO-GROUND INSULATION LEVELS. DO NOT MEGGER CHECK SOLID-STATE EQUIPMENT. TEST EACH MOTOR & RECORD NAMEPLATE DATA, OVERLOAD RELAY EQUIPMENT, PROTECTIVE RELAY SETTING, VOLTAGE & CURRENT PHASE READINGS & DIRECTION OF ROTATION.
F. MAGNETIC COMBINATION NON-REVERSING STARTERS WITH CIRCUIT BREAKERS. EQUIP STARTERS WITH BLOCK TYPE MANUAL RESET OVERLOAD RELAYS. PROVIDE ONE NORMALLY OPEN & TWO NORMALLY CLOSED AUXILIARY CONTACTS. PROVIDE MINIMUM 50VA CONTROL VOLTAGE TRANSFORMER WITH VOLTAGE AS REQUIRED BUT NOT TO EXCEED 120V. PROVIDE ENCLOSURE IN SIZE & NEMA RATING AS REQUIRED. EQUIP WITH PHASE FAILURE, UNDERVOLTAGE & PHASE UNBALANCE RELAY PROTECTION. PROVIDE OPERATING HANDLE FOR DISCONNECT SWITCH MECHANISM WITH INDICATION & CONTROL OF SWITCH POSITION, WITH ENCLOSURE DOOR EITHER OPENED OR CLOSED, CAPABLE OF BEING LOCKED IN OFF POSITION, WITH A PADLOCK. SQUARE 'D' CLASS 8539.

LIGHTING

A. U.L. LABELS MUST APPEAR ON ALL NEW LIGHTING FIXTURES. FLEXIBLE CONDUIT TAILS, UP TO 6' IN LENGTH, MAY BE USED BETWEEN JUNCTION BOXES & RECESSED LIGHTING FIXTURES. OUTLET BOXES MAY SERVE UP TO FOUR SEPARATELY RECESSED FIXTURES. BALLASTS SHALL BE ELECTRONIC HIGH-POWER FACTOR CBM LABELED.
B. PROVIDE PROPER TRIM PER REFLECTED CEILING PLAN OR ACTUAL CEILING INSTALLED.
C. PROVIDE NEW LAMPS IN ALL NEW FIXTURES.
D. PROVIDE FOUNDATIONS FOR ALL SITE LIGHTING FIXTURES/POLES AS RECOMMENDED BY MANUFACTURER.
E. LIGHTING FIXTURES IN MECHANICAL ROOMS, ETC., SHALL BE COORDINATED WITH EQUIPMENT
F. SITE LIGHTING FIXTURES LOCATED BETWEEN PARKING SPACES OR SUBJECT TO BEING DAMAGED BY VEHICLES, SHALL BE PROVIDED WITH 2' HIGH X 2' DIAMETER CONCRETE BASES.
G. LIGHTING FIXTURES IN MECHANICAL ROOMS, ETC., SHALL BE COORDINATED WITH EQUIPMENT.
H. ALL INTERIOR LAMPS SHALL BE 4000°K KELVIN TEMPERATURE. COORDINATE WITH ARCHITECT FOR EXACT COLOR REQUIRED.

LIGHTING RELAY PANELS

A. PROVIDE LIGHTING RELAY PANELS WHERE INDICATED EQUAL TO THE FOLLOWING TYPES:
4-POLE - INTELLIGENT LIGHTING CONTROLS, APPRENTICE-II
8-POLE - DOUGLAS LIGHTING CONTROLS - LITE-PAK
16-POLE - DOUGLAS LIGHTING CONTROLS - LITE-PAK FOR LARGER POLE REQUIREMENTS USE EXTENSION KITS.
B. PROVIDE LOW VOLTAGE SWITCH FOR OVERRIDE. LOCATE NEAR FRONT ENTRANCE UNLESS OTHER WISE NOTED.
C. PROVIDE PHOTOSENSOR FOR SENSING OF NIGHT/DAY TIMES. LOCATE EXTERIOR TO THE BUILDING PER MANUFACTURER INSTRUCTIONS.
D. PROVIDE ADDITIONAL LOW VOLTAGE SWITCHES FROM SAME MANUFACTURER AS INDICATED.
E. PROGRAM ALL OPERATIONS PER OWNER'S OCCUPANCY SCHEDULE. INCLUDE A 4-HOUR TRAINING PERIOD WITH OWNER'S PERSONNEL ON PROBE OPERATION AND INSTRUCTIONS FOR SETTINGS.

SURGE SUPPRESSION EQUIPMENT

A. PROVIDE TYPE 1 SURGE PROTECTION DEVICE FOR ALL SERVICE ENTRANCE PANELS.
B. PROVIDE TYPE 2 SURGE PROTECTION DEVICE FOR ALL DOWNSTREAM PANELS.
C. CONSULT ELECTRICAL PANEL MANUFACTURER REPRESENTATIVE FOR COMPATIBLE DEVICES

PANELBOARDS

A. PANELBOARDS SHALL BE MANUFACTURED BY SQUARE 'D', GENERAL ELECTRIC, ITE SIEMENS, OR EATON.
B. PROVIDE LIGHTING & APPLIANCE PANELBOARDS, & POWER DISTRIBUTION PANELBOARDS WITH DEAD FRONT COVERS, FULL SIZE NEUTRAL & BOLT-ON HEAVY DUTY, QUICK MAKE, QUICK BREAK CIRCUIT BREAKERS. PANEL BOARDS SHALL BE U.L. LISTED.
C. INSTALL PANELBOARDS SO TOP BREAKER IS NOT HIGHER HAN 6'-0" ABOVE FLOOR.
D. CONTRACTOR SHALL BALANCE PHASES IN PANELBOARD SO THAT LOAD IMBALANCE DOES NOT EXCEED 10%.
E. PANELBOARD SHALL INCLUDE COMPLETE TYPEWRITTEN DIRECTORY.
F. PROVIDE SPARE CONDUITS TO CEILING CAVITY FOR SPARES/SPACES IN RECESSED PANELBOARDS. PROVIDE (1) 3/4" FOR EVERY 3 SPACES.
G. PROVIDE 120V POWER TO 480V CIRCUIT BREAKER SHUNT-TRIPS FROM NEAREST 120V PANELBOARD.
H. LOAD CENTERS SHALL BE DEAD FRONT, FACTORY ASSEMBLED, FULL-SIZE NEUTRAL AND GROUND BAR. NOTE: IF LOADCENTERS CANNOT BE FABRICATED TO MEET THE MINIMUM REQUIREMENTS SPECIFIED, PROVIDE LIGHTING & APPLIANCE PANELBOARDS WITH BOLT-ON BREAKERS.
I. NON-LINEAR PANELBOARDS SHALL BE PROVIDED WHERE INDICATED ON DRAWINGS & SHALL BE SUPPLIED WITH 200% RATED NEUTRAL.
J. PROVIDE U.L. LISTED BREAKERS FOR EXISTING PANELBOARDS TO MATCH MANUFACTURER & AIC RATING.
K. PROVIDE AFCI (ARC FAULT CIRCUIT INTERRUPTER) BREAKERS FOR ALL CIRCUITS SERVING BEDROOMS OF DWELLING UNITS PER N.E.C. 210.12.
L. ALL BREAKERS SERVING MECHANICAL, REFRIGERATION, OR OTHER EQUIPMENT WHERE REQUIRED, SHALL BE HACR RATED.
M. BREAKERS WITH HID LIGHTING LOADS SHALL BE HID RATED.
N. BREAKERS SERVING ELEVATOR SHALL BE SHUNT-TRIP TYPE.
O. BREAKERS SERVING CIRCUITS UNDER KITCHEN HOODS SHALL BE SHUNT-TRIP TYPE.

MOTOR AND CIRCUIT DISCONNECTS

A. DISCONNECT SWITCHES MAY BE GENERAL DUTY FOR 240V, & SHALL BE HEAVY DUTY FOR 600V.
B. PROVIDE RAIN-TIGHT HUBS FOR EXTERIOR DISCONNECTS.
C. PROVIDE CLASS R REJECTION FUSE CLIPS & CLASS R FUSES.
D. FUSES SHALL BE MANUFACTURED BY BUSSMAN, LITTLE OR COULD-SHAWMUT.
E. SERVICE DISCONNECT SWITCH SHALL BE HEAVY DUTY TYPE.

CONDUIT FITTINGS

A. COMPRESSION TYPE STEEL OR STEEL SETSCREW TYPE SHALL BE UTILIZED.
B. PROVIDE PROPER EXPANSION FITTINGS WHEN CROSSING BUILDING EXPANSION LINES.

SWITCHBOARDS

A. SWITCHBOARDS SHALL BE SQUARE 'D' QED-5 POWER-STYLE GROUP MOUNTED MULTI-SECTION I-LINE SWITCHBOARDS.
B. SWITCHBOARDS SHALL BE DEAD-FRONT AND TOTALLY FRONT ACCESSIBLE.
C. PROVIDE STAND ALONE, MICROPROCESSOR BASED, 3-PH POWER METERING DEVICE MOUNTED RECESSED IN FRONT OF SWITCHBOARD. SQUARE 'D' POWER LOGIC MODEL CM2250. PROVIDE CURRENT-TRANSFORMERS & RELAYING IN SIZES AS REQUIRED.
D. MAIN BREAKER SHALL BE 100% CURRENT RATED & INCLUDE GROUND FAULT & SHUNT-TRIP.
E. MEGGER CHECK PHASE-TO-PHASE & PHASE-TO-GROUND INSULATION LEVELS PRIOR TO ENERGIZATION.

CODE REQUIREMENTS

A. OPERATING AND MAINTENANCE MANUALS SHALL BE PROVIDED TO THE BUILDING OWNER. THE MANUALS SHALL INCLUDE, AT A MINIMUM, THE FOLLOWING:
1. SUBMITTAL DATA STATING EQUIPMENT RATING AND SELECTED OPTIONS FOR EACH PIECE OF EQUIPMENT REQUIRING MAINTENANCE.
2.OPERATION MANUALS AND MAINTENANCE MANUALS FOR EACH PIECE OF EQUIPMENT REQUIRING MAINTENANCE. REQUIRED ROUTINE MAINTENANCE ACTIONS SHALL BE CLEARLY IDENTIFIED.
3.NAME AND ADDRESS OF AT LEAST ONE QUALIFIED SERVICE AGENCY. FB ECC, CHAPTER 4, SECTION C405.6.4
B. WITHIN 30 DAYS AFTER THE DATE OF SYSTEM ACCEPTANCE, RECORD DRAWINGS OF THE ACTUAL ELECTRICAL INSTALLATION SHALL BE PROVIDED TO THE BUILDING OWNER, INCLUDING:
1. SINGLE-LINE DIAGRAM OF THE BUILDING ELECTRICAL DISTRIBUTION SYSTEM AND
2. FLOOR PLANS INDICATING LOCATION AND AREA SERVED FOR ALL DISTRIBUTION. FB ECC, CHAPTER 4, SECTION C405.6.4.2.
C. PRIOR TO PASSING FINAL INSPECTION, A REGISTERED DESIGN PROFESSIONAL SHALL PROVIDE EVIDENCE THAT THE LIGHTING CONTROL SYSTEMS HAVE BEEN TESTED TO ENSURE THAT CONTROL HARDWARE AND SOFTWARE ARE CALIBRATED, ADJUSTED, PROGRAMMED AND IN PROPER WORKING CONDITION IN ACCORDANCE WITH THE CONSTRUCTION DOCUMENTS AND MANUFACTURER'S INSTRUCTIONS. FUNCTIONAL TESTING SHALL BE IN ACCORDANCE WITH SECTIONS C408.3.1.1 AND C408.3.1.2 FOR THE APPLICABLE CONTROL TYPE. FB ECC, CHAPTER 4, SECTION C408.3.1.
D. WITHIN 90 DAYS FROM THE DATE OF RECEIPT OF THE CERTIFICATE OF OCCUPANCY, THE BUILDING OWNER SHALL BE PROVIDED WITH CERTIFICATION THAT THE LIGHTING CONTROLS MEET THE DOCUMENTED PERFORMANCE CRITERIA OF THE FB ECC, CHAPTER 4, SECTION C408.32 FB ENERGY CONSERVATION CODE C405.6.4, C405.6.4.2, C408.3.1, & C408.3.2.

GROUNDING

A. PROVIDE INSULATED GROUND CONDUCTORS IN ALL CONDUITS.
B. PROVIDE GROUNDING BUSHINGS FOR FEEDER CONDUITS.
C. TRANSFORMERS SHALL BE GROUNDED TO BUILDING STEEL WITH EXOTHERMIC CONNECTIONS.
D. SERVICE GROUND RESISTANCE SHALL BE MEASURED WITHOUT DEPENDING ON WATER PIPING SYSTEM & SHALL BE 25Ω OR LESS, IF GREATER THAN 25Ω, DRIVE ADDITIONAL GROUND RODS TO OBTAIN REQUIRED RESISTANCE.
E. GROUND METAL LIGHTING POLES AS REQUIRED BY N.E.C.

TRANSFORMERS

A. TRANSFORMERS SHALL BE DRY TYPE WITH VENTILATED ENCLOSURES & 115°C TEMPERATURE RISE ABOVE 40°C. 1
B. PROVIDE PRIMARY WINDINGS WITH 6 TAPS, (2) 2 % INCREMENTS ABOVE 2 1 & (4) 2 % INCREMENTS BELOW FULL RATED VOLTAGE.
C. TRANSFORMERS SHALL BE RATED FOR CONTINUOUS OPERATION AT RATED KVA.
D. TRANSFORMERS SHALL HAVE CLASS H INSULATION.
E. WALL MOUNTED TRANSFORMERS SHALL UTILIZE WALL MOUNTING BRACKETS WITH VIBRATION ISOLATION PADS.
F. STRUCTURAL CEILING SUPPORTED TRANSFORMERS SHALL UTILIZE THREADED ROD & UNISTRUT FRAME WITH VIBRATION ISOLATION PADS. SUPPORT STRUCTURE SHALL HAVE MINIMUM 3.0 SAFETY FACTOR.

FIRE ALARM DETECTION SYSTEM

A. INSTALLATION SHALL BE IN ACCORDANCE WITH THE DRAWINGS, SPECIFICATIONS & NEC, NFPA 72, NFPA101, NFPA 90A, NFPA 20, NFPA 2010, FLORIDA FIRE PREVENTION CODE 2004 Ed.; FLORIDA BUILDING CODE 2004 Ed.; FAC 61G15 FLORIDA STATE STATUTES 489, 633 & STATE FIRE MARSHAL RULES & REGULATIONS; APPROVAL FROM THE OFFICE OF THE STATE FIRE MARSHAL. THE CONTRACT DOCUMENTS SHOW MINIMUM REQUIREMENTS OF THE FIRE ALARM SYSTEM. PROVIDE ADDITIONAL FIRE ALARM DEVICES AS REQUIRED FOR A COMPLETE FIRE ALARM SYSTEM PER CODES & AUTHORITY HAVING JURISDICTION. CONTRACTOR SHALL PROVIDE COMPLETE FIRE ALARM SHOP DRAWINGS SIGNED/SEALED/DATED BY A REGISTERED FLORIDA PROFESSIONAL ENGINEER.
B. ALL WIRING & INSTALLATION SHALL COMPLY WITH NFPA 70. RECOMMENDATION BY MANUFACTURER'S DOCUMENTATION FOR WIRING REQUIREMENTS FOR SHIELDING CERTAIN CONDUCTORS FROM OTHERS OR ROUTING IN SEPARATE RACEWAYS SHALL BE FOLLOWED, PROVIDED IT DOES NOT VIOLATE NFPA 70.
C. SYSTEM INCLUDING ALL COMPONENTS SHALL BE LISTED UNDERWRITERS LABORATORIES, INC. (U.L.) FOR THE FIRE PROTECTIVE SIGNALING PURPOSE FOR WHICH USED.
1. U.L. 864 FIRE PROTECTIVE SIGNALING SYSTEMS.
2. U.L. 268 SMOKE DETECTORS.
3. U.L. 1480 FIRE ALARM SIGNALING DEVICES.
D. THE FIRE ALARM PANEL SHALL HAVE A MINIMUM OF 254 ADDRESSABLE POINTS, EXPANDABLE 32,512 POINTS ON A NETWORK AS EQUIPMENT SHALL BE AS SPECIFIED & SHALL BE LOCATED AS SHOWN ON THE DRAWINGS. FIRE ALARM SYSTEM WIRING SHALL BE AS FOLLOWS: INITIATING DEVICE CIRCUITS-STYLE B; NETWORK DATA LINE CIRCUITS-STYLE 7; INDICATING APPLIANCE CIRCUITS-STYLE Y; ANALOG DEVICE LOOPS-STYLE 4. ACCEPTABLE SUBSTITUTIONS BY SIMPLEX & SIEMENS/PYROTRONICS.
E. THE FIRE ALARM SYSTEM SHALL BE A MULTIPLEX TYPE ADDRESSABLE SYSTEM. EACH FIRE ALARM DEVICE SHALL BE ANNUNCIATED AT THE FIRE ALARM CONTROL PANEL.
F. CONTROL PANEL SHALL BE PROVIDED WITH MODULES, PROGRAMMING, SPACE FOR 8 ADDITIONAL ZONE MODULES, BATTERY BACKUP PER NFPA 72 (60 HOURS MINIMUM - REMOTE STATION SERVICE), BYPASS SWITCHES, CPU, POWER SUPPLY, & AS REQUIRED PER NFPA 72. SUBMIT BATTERY CALCULATIONS WITH SHOP DRAWINGS.
G. ADDRESSABLE MANUAL STATIONS SHALL BE SEMI-FLUSH MOUNTED 48" AFF TO TOP OF DEVICE.
H. DUCT SMOKE DETECTORS WITH ADDRESSABLE BASES AND HOUSING SHALL PROVIDE REMOTE DUCT DETECTOR TEST STATION WITH INDICATOR LIGHT.
I. ALARM LIGHTS SHALL BE FLUSH, WALL MOUNTED 80" AFF, WHITE COLOR. STROBE COVERAGE SHALL MEET NFPA 72 STANDARDS.
J. AUDIO-VISUAL ALARM SIGNAL DEVICES SHALL BE WHITE COLOR. ALARM LIGHTS SHALL BE SYNCHRONIZED. PROVIDE WIRING AS REQUIRED. AUDIO DEVICES SHALL BE HORNS.
K. AIR HANDLING SYSTEM & EXHAUST FAN SHUTDOWN ADDRESSABLE RELAYS SHALL BE R2M.
L. WATERFLOW DETECTOR/PRESSURE SWITCHES & SPRINKLER SUPERVISORY SWITCHES TO BE SUPPLIED & INSTALLED BY THE FIRE PROTECTION SYSTEM CONTRACTOR & WIRED TO THE FIRE ALARM SYSTEM BY THIS CONTRACTOR. PROVIDE MONITOR MODULE FRCME-5.
M. REMOTE ANNUNCIATORS SHALL BE 80 CHARACTER, BACK-LIT, ALPHANUMERIC, LCD READOUT & BE SUPERVISED BY CONTROL PANEL.
N. PROVIDE END OF LINE RESISTORS WHERE REQUIRED.
O. ALL FIRE ALARM SYSTEM WIRING SHALL BE PER MANUFACTURER'S RECOMMENDATIONS & SHALL MEET REQUIREMENTS OF ARTICLE 760 OF 3 THE NATIONAL ELECTRICAL CODE. STUB "C. FROM DEVICE BACKBOX 4 TO ACCESSIBLE CEILING CAVITY & TERMINATE WITH PLASTIC BUSHINGS. WIRING NOT IN CONDUIT SHALL BE ROUTED NE

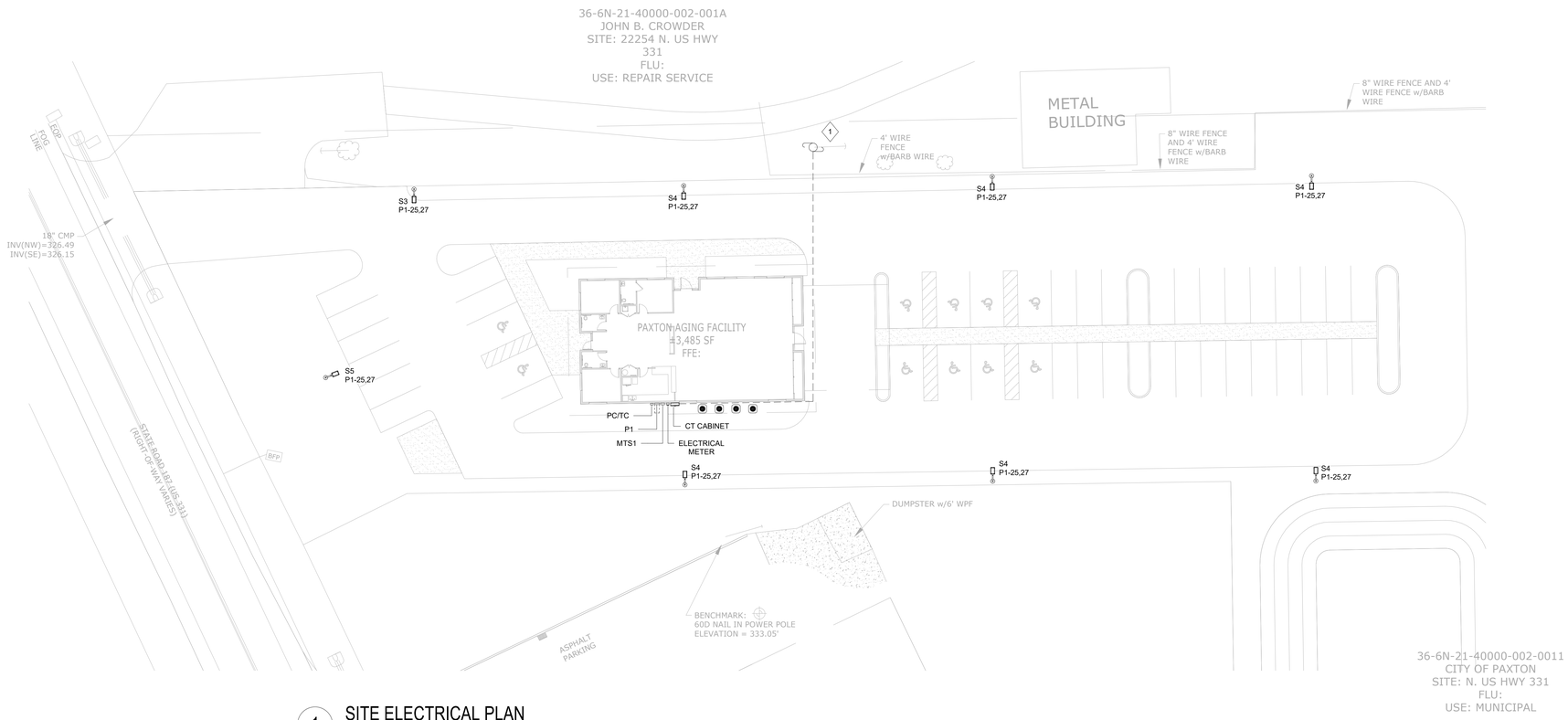

1 SITE ELECTRICAL PLAN
SCALE: 1" = 20'-0"

GENERAL ELECTRICAL NOTES

1. SEE SINGLE LINE DIAGRAM OR RISER DIAGRAM FOR FEEDER WIRE AND CONDUIT SIZE. ALL CIRCUITS NOT SIZED ON DRAWING SHALL BE INSTALLED TO MEET MINIMUM SIZE REQUIRED BY NEC. ALL CONDUCTORS SHALL HAVE AN EQUIPMENT GROUND WIRE SIZED PER NEC.
2. FIELD VERIFY EXACT LOCATION OF ALL DEVICES AND EQUIPMENT PRIOR TO ROUGH-IN.

KEYE NOTES #

1. APPROXIMATE LOCATION OF EXISTING UTILITY POLE. CONTRACTOR SHALL COORDINATE ALL SERVICE REQUIREMENTS WITH UTILITY COMPANY

Cabral Engineering Inc
Engineering - Consulting - Project Management
1058 Palm Cover Dr, Orlando, FL 32835
(321) 246 - 4041 C.A. No. 33227
CEI Project #22.63

N

REVISION
0 00/00/00

ARCHITECTURE + ENGINEERING
License No. 26002939 License No. 30900
1230 Oakley Seaver Drive, Suite 200 - Clermont, FL 34711
P: 888-850-FFAE (3323)
www.forefrontae.com

FOREFRONT
Service Beyond Design

FRANCISCO J CABRAL LICENSE No. 87110 STATE OF FLORIDA PROFESSIONAL ENGINEER

AGING FACILITY
2274 US HIGHWAY 331 N PAXTON FL 32567
SITE ELECTRICAL PLAN

ANY DISCREPANCY OR ERROR IN DIMENSIONS OR NOTES SHALL BE BROUGHT TO THE ATTENTION OF THE DESIGN PROFESSIONAL FOR CLARIFICATION PRIOR TO COMMENCEMENT OF CONSTRUCTION.

JOB #: 21-17367
DATE: 07/21/23

E101

C:\sensitive\Cucuta\OneDrive - cabralengineering.com\DESIGN\ACTIVE\Paxton Senior Center\02 Client Input\20230531 All update\Aging Facility - Standard\TTB; Plot Date: ----,----; Plotted By: MichaelCucuta

© FOREFRONT ARCHITECTURE & ENGINEERING LLC 2014 THIS DOCUMENT AND/OR THE DESIGN CONCEPTS EXPRESSED HEREIN ARE THE PROPERTY OF FOREFRONT ARCHITECTURE & ENGINEERING LLC AND ALL RIGHTS OF OWNERSHIP, INCLUDING COPYRIGHT OF INTELLECTUAL PROPERTY, ARE RESERVED. ANY REPRODUCTIONS, COPYING, OR USE OF THIS DOCUMENT AND/OR THE DESIGN CONCEPT WITHOUT THE WRITTEN CONSENT OF FOREFRONT ARCHITECTURE & ENGINEERING LLC IS STRICTLY PROHIBITED AND PROTECTED BY UNITED STATES AND INTERNATIONAL LAW. IF PRINTED ON 11X17 SCALE IS HALF THE SIZE NOTED.

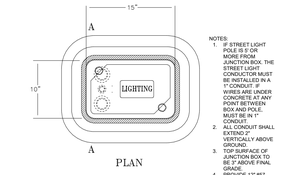

PLAN

NOTES:
1. IF STREET LIGHT POLE IS 5' OR MORE FROM JUNCTION BOX, THE STREET LIGHT CONDUCTOR MUST BE INSTALLED IN A CONDUIT. IF WIRES ARE UNDER CONCRETE AT ANY POINT BETWEEN BOX AND POLE, MUST BE IN 1" CONDUIT.
2. ALL CONDUIT SHALL EXTEND 7" VERTICALLY ABOVE GROUND
3. TOP SURFACE OF JUNCTION BOX TO BE 1" ABOVE FINAL GRADE.
4. PROVIDE 12" #57 ROCK AT THE BOTTOM OF EACH JUNCTION BOX.

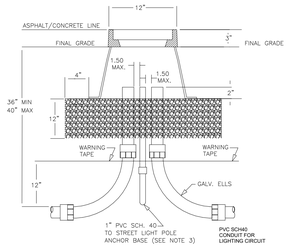

3 LIGHT POLE JB
SCALE: N.T.S.

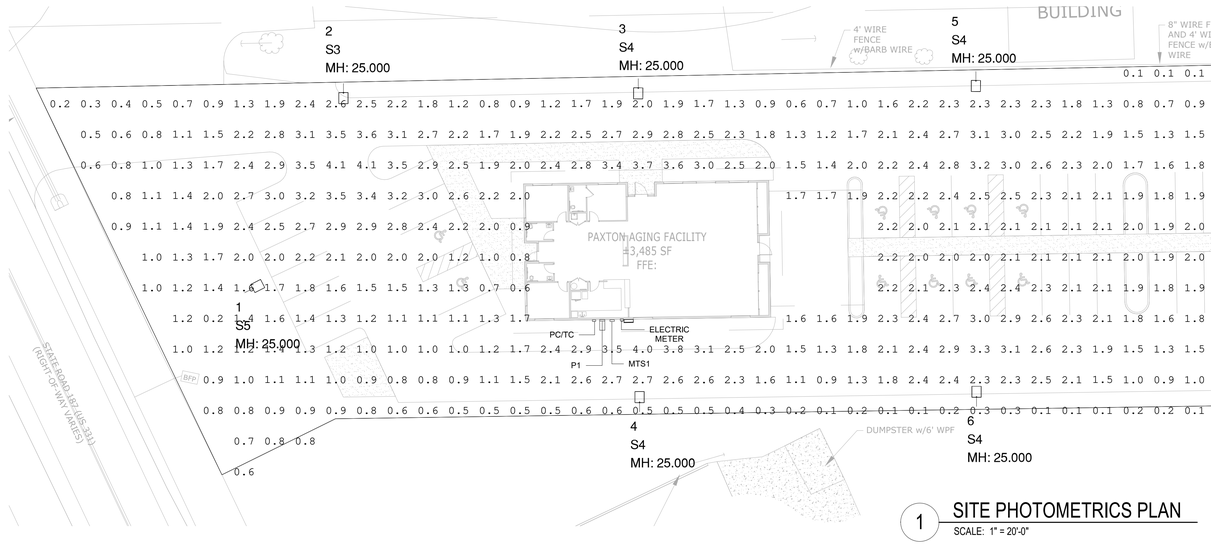

1 SITE PHOTOMETRICS PLAN
SCALE: 1" = 20'-0"

Photometric Model Parameters							
Symbol	Tag	Qty	Label	LLF	Lum. Watts	Description	[MANUFAC]
	S5	1	S5	1.000	137	DSX0 LED P6 40K 70CRI T5W MVOLT RPA NLTAIR2 PIRH	Lithonia Lighting
	S4	6	S4	1.000	137	DSX0 LED P6 40K 70CRI BLC4 MVOLT RPA NLTAIR2 PIRH	Lithonia Lighting
	S3	1	S3	1.000	137	DSX0 LED P6 40K 70CRI BLC3 MVOLT RPA NLTAIR2 PIRH	Lithonia Lighting

Calculation Summary						
Label	CalcType	Units	Avg	Max	Min	Avg/Min
BOUNDARY - EAST	Illuminance	Fc	0.01	0.1	0.0	N.A.
BOUNDARY - NORTH	Illuminance	Fc	0.17	0.7	0.0	N.A.
BOUNDARY - SOUTH	Illuminance	Fc	0.15	0.8	0.0	N.A.
BOUNDARY - WEST	Illuminance	Fc	0.66	1.0	0.1	6.60
SITE	Illuminance	Fc	0.85	4.1	0.0	N.A.
PARKING LOT	Illuminance	Fc	1.98	4.1	0.2	9.90

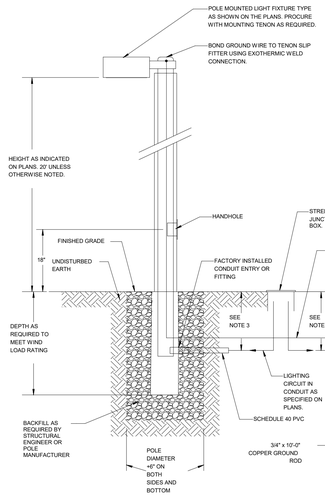

POLE MOUNTED FIXTURE NOTES

1. WHERE STRUCTURAL DRAWINGS ARE NOT PROVIDED, WIND RATINGS SHALL BE IN ACCORDANCE WITH THE 2020 EDITION OF THE FBC. POLE, BASE, ANCHOR BOLT AND LIGHT FIXTURE ASSEMBLY SHALL CERTIFIED BY THE MANUFACTURER FOR THE WIND GUST RATING. THE CONTRACTOR SHALL PROCURE THE SERVICES OF A FLORIDA LICENSED STRUCTURAL ENGINEER TO PROVIDE SIGNED AND SEALED CALCULATIONS AND DRAWINGS CERTIFYING THE POLE MOUNTED LIGHT FIXTURE DETAIL AND/OR MODIFYING THE DETAIL AS REQUIRED TO MEET THE WIND GUST RATINGS PER THE FBC.
2. INSTALL SITE LIGHTING AS INDICATED. IN ACCORDANCE WITH THE MANUFACTURER'S INSTRUCTIONS, NEC AND AHJ STANDARDS.
3. DEPTH MUST COMPLY WITH PER NEC 300.5.
4. PROVIDE AN 10"X15" IN-GROUND JUNCTION BOX SET AT EACH POLE. SEE DETAIL #5/E901.
5. PROVIDE SUFFICIENT SPACE ENCOMPASSING HAND ACCESS AND CABLE ENTRANCE HOLES FOR INSTALLATION OF UNDERGROUND CABLES.
6. PROVIDE BUSSMAN HEB FUSEHOLDER (LITTLEFUSE LEB-XX-S) WITH BREAKAWAY RECEPTACLES IN ALL CONDUCTOR RUNNING TO THE TOP OF THE POLE. LOCATE FUSE HOLDER AT HAND HOLE OR IN BASE JUNCTION BOX AS APPLICABLE. PROVIDE KTK FUSES IN EACH PHASE CONDUCTOR, SIZED 1.5 TIMES THE MAXIMUM FULL LOAD CURRENT OF DRIVER SERVED BY EACH CONDUCTOR. DO NOT EXCEED RATING OF CIRCUIT OVERCURRENT PROTECTIVE DEVICE. PROVIDE FUSE BLANKS IN NEUTRAL CONDUCTORS. MAKE UP ALL OTHER SPLICES IN POLE OR POLE BASE USING SCOTCHCAST 400 RESIN FOR WATERTIGHT CONNECTION.
7. PROVIDE EQUIPMENT GROUNDING CONNECTIONS FOR EACH POLE MOUNTED LIGHT FIXTURE INSTALLATION.
8. ALL HARDWARE SHALL BE STAINLESS STEEL.
9. ALL LIGHT FIXTURES SHALL BE FULL CUT-OFF. SEE LIGHT SCHEDULE FOR MODELS.
10. CONTRACTOR SHALL PROCURE ALL REQUIRED MOUNTING HARDWARE.

4 SITE LIGHT POLE DETAIL
SCALE: N.T.S.

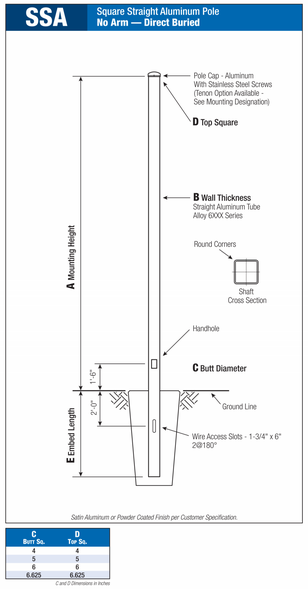

C Butt Sq.	D Top Sq.
4	4
5	5
6	6
6.625	6.625

C and D Dimensions in Inches

Pole
The pole shaft will be constructed of seamless extruded tube of 6XXX Series Aluminum Alloy per the requirements of ASTM B221. The shaft assembly shall be full-length heat treated after base weld.

Handhole
4"-5" Butt Squares -
2" x 4" Handhole with square Lap Style Aluminum Door and two (2) Stainless Steel Self-Tapping Attaching Screws. A Grounding Provision incorporating a tapped 1/4"-20NC Grounding Provision is provided opposite the Handhole.
6" x Butt Square -
3" x 5" Handhole with square Lap Style Aluminum Door and two (2) Stainless Steel Self-Tapping Attaching Screws. A Grounding Provision incorporating a tapped 1/4"-20NC Grounding Provision is provided opposite the Handhole.

Embed Detail
Direct Buried Pole wire access will be provided 24" below ground line. Soil conditions vary by site. Foundation requirements should be determined by a qualified Structural Engineer with knowledge of jobsite soil conditions.

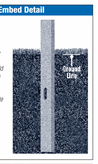

Vibration Damper
If determined necessary by Hapco, a top-mount, field-installed First Mode Vibration Damper will be provided. Customer specification of the damper is available.

Mounting Designation
Side Drill Mount
For Side Drill Mount applications specify luminaire type, quantity and orientation. A luminaire drilling template must be supplied at time of order.

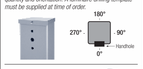

Tenon Mount
For Tenon Mount applications specify both Tenon diameter (2.375", 2.875", 3.5", etc.) and length (3", 4", etc.).



A Mtg. Ht.	B Wall Thk.	C Butt Sq.	E Embed Depth	Total Lum. Wt.	Maximum EPA 120	130	140	150	160	170	180	Catalog Number
8	0.125	4	5	90	10.6	8.8	7.4	6.3	5.4	4.7	4.0	SSA08B4-D-**
10	0.125	4	4	70	7.7	6.3	5.2	4.3	3.6	3.0	2.5	SSA10B4-D-**
10	0.188	4	5	100	11.6	9.6	8.1	6.8	5.8	5.0	4.3	SSA10D4-D-**
12	0.125	4	4	55	5.6	4.5	3.6	2.9	2.3	1.8	1.4	SSA12B4-D-**
12	0.188	4	5	75	8.8	7.2	6.0	4.9	4.1	3.4	2.8	SSA12D4-D-**
12	0.188	5	6	140	17.0	14.1	11.7	9.9	8.3	7.1	6.0	SSA12D5-D-**
14	0.125	4	4	45	4.0	3.1	2.3	1.7	1.2	0.8	-	SSA14B4-D-**
14	0.188	4	5	65	6.7	5.4	4.3	3.5	2.8	2.2	1.7	SSA14D4-D-**
14	0.188	5	6	115	13.4	10.9	9.0	7.4	6.1	5.0	4.1	SSA14D5-D-**
15	0.125	4	4	40	3.4	2.5	1.8	1.2	0.8	-	-	SSA15B4-D-**
15	0.188	4	5	55	5.9	4.6	3.6	2.8	2.2	1.6	1.2	SSA15D4-D-**
15	0.188	5	6	100	11.9	9.6	7.8	6.3	5.1	4.1	3.3	SSA15D5-D-**
16	0.125	4	4	40	2.7	1.9	1.3	0.8	-	-	-	SSA16B4-D-**
16	0.188	4	5	50	5.0	3.9	3.0	2.3	1.7	1.2	0.7	SSA16D4-D-**
16	0.188	5	6	90	10.5	8.4	6.7	5.3	4.2	3.3	2.5	SSA16D5-D-**
18	0.125	4	4	35	1.8	0.9	-	-	-	-	-	SSA18B4-D-**
18	0.188	4	5	45	3.6	2.6	1.9	1.2	0.7	-	-	SSA18D4-D-**
18	0.250	4	5	55	5.3	4.1	3.1	2.3	1.7	1.1	0.7	SSA18F4-D-**
18	0.188	5	6	75	8.0	6.2	4.8	3.6	2.6	1.8	1.2	SSA18D5-D-**
20	0.125	4	4	40	0.7	-	-	-	-	-	-	SSA20B4-D-**
20	0.188	4	5	40	2.4	1.6	0.9	-	-	-	-	SSA20D4-D-**
20	0.250	4	5	45	3.9	2.8	2.0	1.3	0.7	-	-	SSA20F4-D-**
20	0.188	5	6	60	6.0	4.4	3.1	2.1	1.3	0.6	-	SSA20D5-D-**
20	0.250	5	6	80	8.9	6.9	5.3	4.0	2.9	2.1	1.3	SSA20F5-D-**
20	0.188	6	7	80	8.7	6.5	4.7	3.3	2.1	1.2	-	SSA20D6-D-**
20	0.250	6	7	115	12.9	10.0	7.8	6.0	4.5	3.3	2.2	SSA20F6-D-**
25	0.188	5	6	40	2.1	0.9	-	-	-	-	-	SSA25D5-D-**
25	0.250	5	6	50	4.2	2.7	1.6	0.6	-	-	-	SSA25F5-D-**
25	0.188	6	6	45	3.4	1.8	-	-	-	-	-	SSA25D6-D-**
25	0.250	6	7	70	6.5	4.4	2.7	1.4	-	-	-	SSA25F6-D-**
25	0.250	6.625	8	95	9.9	7.1	4.9	3.1	1.6	-	-	SSA25F-J-D-**
30	0.250	6	7	40	2.0	-	-	-	-	-	-	SSA30F6-D-**
30	0.250	6.625	7	55	4.2	2.0	-	-	-	-	-	SSA30F-J-D-**

Catalog Number System
The catalog number for Hapco poles utilizes the following identification system.

SSA [MOUNTING HEIGHT] [BUTT SQ.] - [BASE STYLE] - D - [FINISH]

SHAFT ASSEMBLY | WALL THICK. | TOP SQ.

Catalog Number Example -
SSA 20 D 5 - D – BA
Square Straight Aluminum, 20' Mounting Height, .188" Wall Thickness, 5" Butt Square, No Taper, Direct Buried, Black Powder Coat Finish.

Wall Thickness
B = .125"
D = .188"
F = .250"

Butt Square
4 = 4"
5 = 5"
6 = 6"
J = 6-5/8"

Top Square
- = No Taper

Base Style
D = FBC Direct Buried

Finish
BA = Black Powder Coat
BH = White Powder Coat
BM = Dark Bronze Powder Coat
BV = Dark Green Powder Coat
GC = Gray Powder Coat
★★ = Specify Finish

EPA Note:
EPA's based on symmetrically placed side mounted fixture(s) not exceeding height of the pole.

Embed Note:
Embed depths shown are calculated using the weight and EPA combination corresponding to the maximum windspeed available per pole. The calculation uses the assumption of a Class 3 soil type with a 12" diameter augered hole that is to be back-filled (preferably with chloride-free concrete or high density polyurethane foam). Embed depths are subject to change if the loading changes or if the wind speed changes. Please contact Hapco for help in determining an appropriate embed depth.

SSA - Square Straight Aluminum Pole | No Arm | Direct Buried

Florida Building Code Guide
2017 FBC EPA's

WARNING: *Do not install light pole without luminaire.*

Florida Building Code Guide
2017 FBC EPA's

2 POLE FOR FIXTURE S1
SCALE: N.T.S.

REVISION
0 00/00/00

ARCHITECTURE + ENGINEERING
License No. 30900
1230 Oakley Seaver Drive, Suite 200 - Clermont, FL 34711
P: 888-850-FFAE (3323)
www.forefront.com
FOREFRONT
Service Beyond Design

ARCHITECTURE
STEPHEN J. CRAWFORD
LICENSE
No. 87110
STATE OF FLORIDA
PROFESSIONAL ARCHITECT

AGING FACILITY
2274 US HIGHWAY 331 N PAXTON FL 32567
SITE PHOTOMETRICS PLAN

05.23.2023 10:00:00 AM
CITY OF PAXTON
FLU:
ASSIGNMENT:

PAXTON FLORIDA

ANY DISCREPANCY OR ERROR IN DIMENSIONS OR NOTES SHALL BE BROUGHT TO THE ATTENTION OF THE DESIGN PROFESSIONAL FOR CLARIFICATION PRIOR TO COMMENCEMENT OF CONSTRUCTION.

JOB #: 21-17957
DATE: 07/21/23

E102

Cabral Engineering Inc
Engineering - Consulting - Project Management
1058 Palm Cover Dr, Orlando, FL 32835
(321) 246 - 4041 C.A. No. 33227
CEI Project #22.63

N

C:\serachael\Cucuta\OneDrive - cabralengineering.com\DESIGN\ACTIVE\Paxton Senior Center\02 Client Input\20230523 AR update\Aging Facility - Standard(1TTB) Plot Date: ---\---\---; Plotted By: MichaelCucuta

© FOREFRONT ARCHITECTURE & ENGINEERING LLC 2014 THIS DOCUMENT AND/OR THE DESIGN CONCEPTS EXPRESSED HEREIN ARE THE PROPERTY OF FOREFRONT ARCHITECTURE & ENGINEERING LLC AND ALL RIGHTS OF OWNERSHIP, INCLUDING COPYRIGHT OF INTELLECTUAL PROPERTY, ARE RESERVED. ANY REPRODUCTIONS, COPYING, OR USE OF THIS DOCUMENT AND/OR THE DESIGN CONCEPT WITHOUT THE WRITTEN CONSENT OF FOREFRONT ARCHITECTURE & ENGINEERING LLC IS STRICTLY PROHIBITED AND PROTECTED BY UNITED STATES AND INTERNATIONAL LAW. IF PRINTED ON 11X17 SCALE IS HALF THE SIZE NOTED.

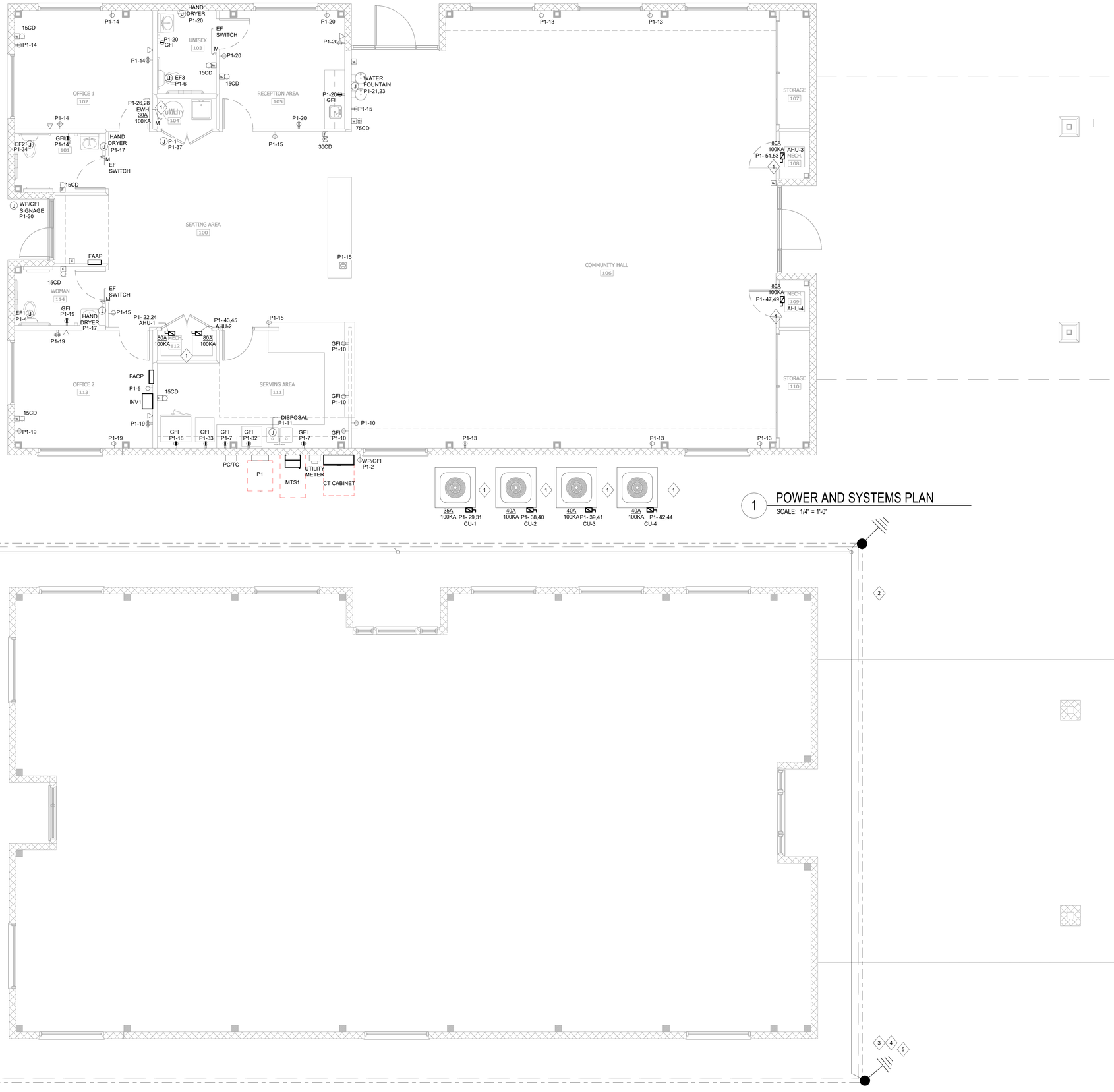

1 POWER AND SYSTEMS PLAN
SCALE: 1/4" = 1'-0"

2 LIGHTNING PROTECTION PLAN
SCALE: 1/4" = 1'-0"

GENERAL NOTES:

1. DO NOT SCALE ELECTRICAL DRAWING FOR ANY DIMENSIONS.
2. REFER TO ARCHITECTURAL INTERIOR ELEVATIONS TO COORDINATE EXACT PLACEMENT OF ALL DEVICES, EQUIPMENT, FIXTURES SWITCHES AND OUTLETS AS NECESSARY PRIOR TO ROUGH-IN.
3. DEVICES ARE SHOWN IN APPROXIMATE LOCATIONS. COORDINATE THE EXACT LOCATIONS OF DEVICES WITH OTHER DIVISIONS AS NECESSARY PRIOR TO ROUGH-IN.
4. ALERT SYSTEM WIRING AND DEVICES TO BE INSTALLED BY CERTIFIED INSTALLER.
5. PROVIDE, AND INSTALL ALL FIRE ALARM SYSTEMS AND EQUIPMENT, INCLUDING, BUT NOT LIMITED TO, RACEWAYS, WIRE CABLE, MODULES, RELAYS. FIRE ALARM ELEMENTS SHOWN ARE PRELIMINARY. A FL-LICENSED FA CONTRACTOR SHALL PROVIDE THE FINAL FA DESIGN.
6. ALL RECEPTACLES AND ELECTRICAL EQUIPMENT SHALL BE TAMPER-RESISTANT.
7. DUCT SMOKE AND FIRE MONITORS, AND DAMPERS SPECIFIED ON MECHANICAL PLANS. ELECTRICAL CONTRACTOR SHALL COORDINATE INSTALLATION WITH MECHANICAL.
8. ALL LIGHTNING PROTECTION CABLES AND DOWN LEADS SHALL BE CONCEALED.
9. THE COMPLETED INSTALLATION SHALL MEET NFPA 780 REQUIREMENTS. THIRD PARTY CERTIFICATION SHALL BE FURNISHED TO THE OWNER UPON COMPLETION.
10. METAL BODIES WITHIN 6' OF THE LIGHTNING PROTECTION SYSTEM SHALL BE BONDED TO THE LIGHTNING PROTECTION SYSTEM.
11. DESIGN SHOWN IS SCHEMATIC AND IS INTENDED TO SHOW BASIC SYSTEM DESIGN. CONTRACTOR SHALL VERIFY DIMENSIONS AND SITE CONDITIONS AND PROVIDE SYSTEM THAT COMPILES WITH CODE REQUIREMENTS AND CAPABLE OF ACHIEVING A MASTER LABEL.
12. ALL LIGHTNING CONDUCTORS ARE TO MAINTAIN A HORIZONTAL OR DOWNWARD PATH. ALL BENDS IN THE CONDUCTOR SHALL HAVE A RADIUS OF 8" OR GREATER AND SHALL HAVE AN ANGLE BEND OF 90 DEGREES OR GREATER.
13. ALL LIGHTNING PROTECTION CONDUCTORS SHALL BE CLASS I ALUMINUM FOR STRUCTURES UP 75' IN HEIGHT. USE CLASS II ALUMINUM FOR STRUCTURES TALLER THAN 75'.
14. ALL METALLIC PIPE STACKS, STRUCTURES, AND OTHER METALLIC APPURTENANCES (WHERE APPLICABLE) MUST BE BONDED TO THE LIGHTNINGPROTECTION SYSTEM PER NFPA 780.
15. PROVIDE GROUNDING ELECTRODE TO STEEL COLUMNS (WHERE APPLICABLE) IN COMPLIANCE WITH NFPA 780.
16. BI-METALLIC LIGHTNING PROTECTION SYSTEM COMPONENTS SHALL BE USED TO AVOID ELECTROLYTIC CORROSION AS APPLICABLE.
17. UNDERGROUND METALLIC PIPING ENTERING THE BUILDING SHALL BE BONDED TO THE NEAREST DOWN CONDUCTOR OR GROUND ELECTRODE.
18. ADHESIVE USED WITH AIR TERMINALS SHALL BE COMPATIBLE WITH ROOFING MEMBRANE. COORDINATE WITH ROOFING CONTRACTOR.
19. AIR TERMINALS ARE TO BE A MAXIMUM OF 24" FROM THE ROOF EDGE AND PROJECT A MINIMUM OF 10" ABOVE THE PROTECTED THE SPACING BETWEEN AIR.
20. TERMINALS ARE NOT TO EXCEED 20'. AIR TERMINALS THAT EXTEND 24" ABOVE THE PROTECTED EDGE ARE NOT TO EXCEED A SPACING GREATER THAN 25', EXCEPT FOR MID-ROOF AIR TERMINALS (50' MAX SPACING). VERIFY THAT THE SPACING BETWEEN DOWN CONDUCTORS IS IN COMPLIANCE WITH NFPA 780.
21. ALL OUTDOOR EQUIPMENT AND FIXTURES TO BE NEMA 3R RATED.

KEYED NOTES: (X)

1. ELECTRICAL CONTRACTOR SHALL CORDINATE LOCATIONS OF ALL DISCONNECTS AND JUNCTION BOXES WITH HVAC / PLUMBING INSTALLER. CONTRACTOR MAY REPLACE DISCONNECTS WITH JUNCTION BOXES AS REQUIRED.
2. #4/0 BARE COPPER GROUND SHALL BE BURIED 30" BELOW GRADE AND PLACED A MINIMUM OF 24" OUTSIDE OF BUILDING FOUNDATION.
3. 3/4" DIA X 20'-0" VERTICALLY DRIVEN CU CLAD GROUND ROD SUCH IN COMPLIANCE WITH NEC 250.53(G).
4. GROUNDING TEST WELL WITH A GROUND ROD.
5. #4/0 COPPER DOWN CONDUCTOR IN NON-METALLIC CONDUIT.

Cabral Engineering Inc
Engineering - Consulting - Project Management
1058 Palm Cover Dr. Orlando, FL 32835
(321) 246 - 4041 C.A. No. 33227
CEI Project #22.63

ARCHITECTURE + ENGINEERING
License No. 39900
1230 Oakley Seaver Drive, Suite 200 - Clermont, FL 34711
License No. 26002939
P: 888-850-FFAE (3323)
www.forefronta.com
FOREFRONT
Service Beyond Design

REVISION
0 00/00/00

AGING FACILITY
2274 US HIGHWAY 331 N PAXTON FL 32567
POWER AND SYSTEMS PLAN

ANY DISCREPANCY OR ERROR IN DIMENSIONS OR NOTES SHALL BE BROUGHT TO THE ATTENTION OF THE ARCHITECT/ENGINEER FOR CLARIFICATION PRIOR TO COMMENCEMENT OF CONSTRUCTION.

JOB #: 21-17367
DATE: 07/21/23

E201

C:\censhael\Cucuta\OneDrive - cabralengineering.com\DESIGN\ACTIVE\Paxton Senior Center\02 Client Input\20230531 AR update\Aging Facility - Standard(TTB) Plot Date: ---,---; Plotted By: MichaelCucuta

C FOREFRONT ARCHITECTURE & ENGINEERING LLC 2014 THIS DOCUMENT AND/OR THE DESIGN CONCEPTS EXPRESSED HEREIN ARE THE PROPERTY OF FOREFRONT ARCHITECTURE & ENGINEERING LLC AND ALL RIGHTS OF OWNERSHIP, INCLUDING COPYRIGHT OF INTELLECTUAL PROPERTY, ARE RESERVED. ANY REPRODUCTIONS, COPYING, OR USE OF THIS DOCUMENT AND/OR THE DESIGN CONCEPT WITHOUT THE WRITTEN CONSENT OF FOREFRONT ARCHITECTURE & ENGINEERING LLC IS STRICTLY PROHIBITED AND PROTECTED BY UNITED STATES AND INTERNATIONAL LAW. IF PRINTED ON 11X17 SCALE IS HALF THE SIZE NOTED.

GENERAL NOTES
1. WIRE ALL EXTERIOR LIGHTS VIA LIGHTING CONTACTOR WITH TIMECLOCK AND/OR PHOTOCELL. CONSULT OWNER FOR DESIRED OPERTATION.
2. WIRE ALL BATTERY PACK FIXTURES AS RECOMMENDED BY MANUFACTURER FOR EMERGENCY LIGHTING USE.

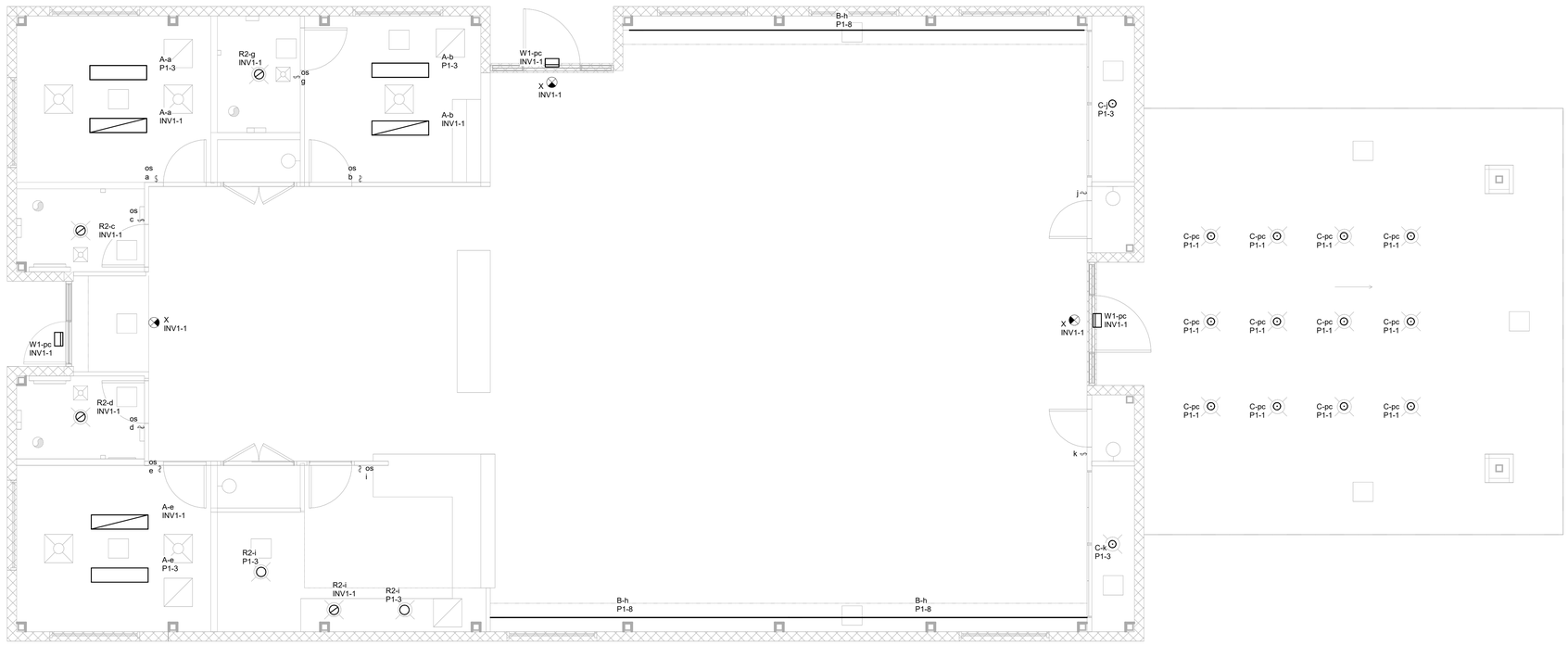

1 LIGHTING PLAN
SCALE: 1/4" = 1'-0"

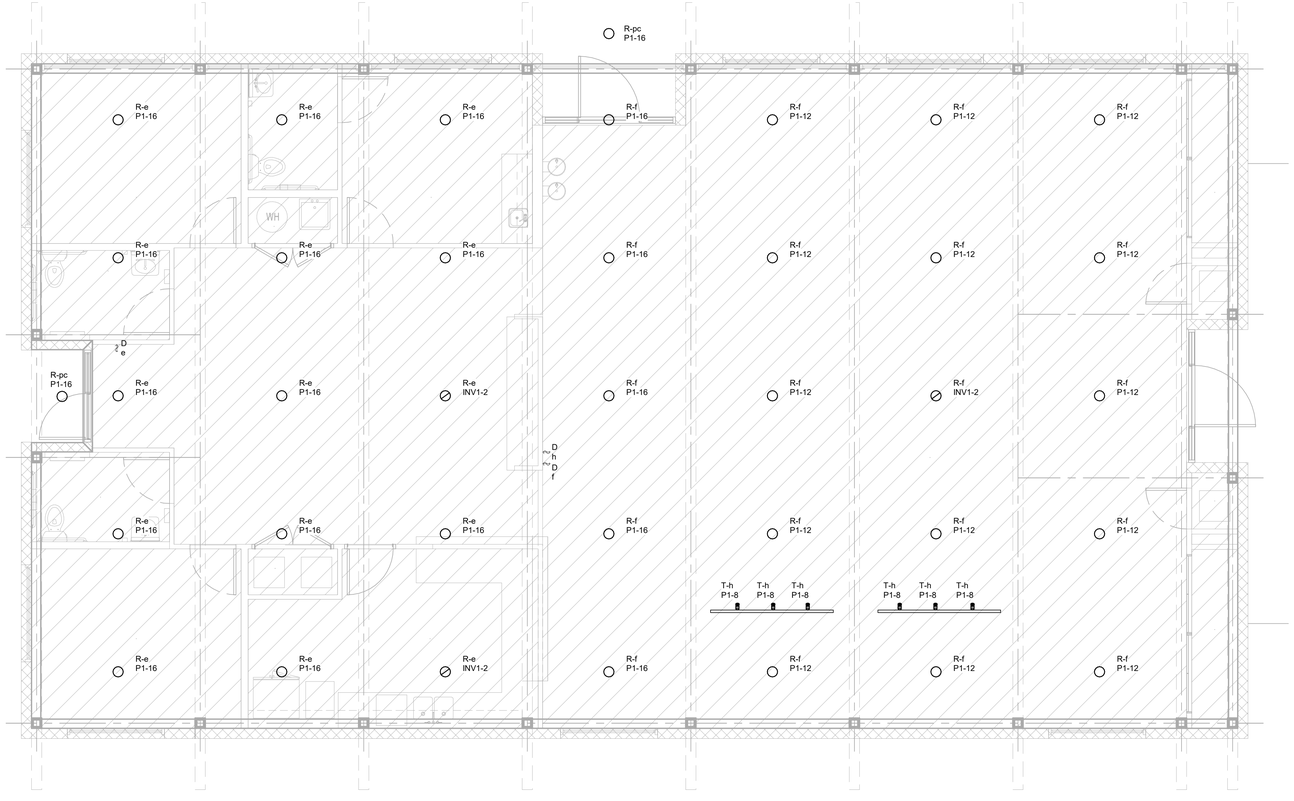

2 LIGHTING PLAN - RAISED FLOOR
SCALE: 1/4" = 1'-0"

Lighting Fixture Schedule

Type Mark	Manufacturer	Model	Load	Remarks
A	LITHONIA LIGHTING	LSIX 4FT 6000 90CRI 4000K FFR SWL MIN10 ZT MVOLT XXX	24.7 W	1X4
B	ConTech Lighting	LLI-LCCW5.8W-20-R30-24V-80-XXX	<varies>	TAPE LIGHT FIXTURE 5.8W PER FT.
C	Acuity Brands Lighting	5911-1DA-T-19C-8040-M-DMU-SS	13.0 W	EXTERIOR DOWNLIGHT
R	Acuity Brands Lighting	EVO6 40 60 AR MWD LD MVOLT GZ10 SCA6 5D	57.6 W	5DEG SLOPED CEILING ADAPTER. CONTRACTOR TO ADJUST ADAPTER TO 7DEG CEILING
R2	Acuity Brands Lighting	EVO6 40 30 AR WD LD MVOLT GZ10	29.5 W	
S3	LITHONIA LIGHTING	DSX0 LED P6 40K 70CRI BLC3 MVOLT RPA NLTAIR2 PIRH	137.0 W	
S4	LITHONIA LIGHTING	DSX0 LED P6 40K 70CRI BLC4 MVOLT RPA NLTAIR2 PIRH	137.0 W	
S5	LITHONIA LIGHTING	DSX0 LED P6 40K 70CR T5W MVOLT RPA NLTAIR2 PIRH	137.0 W	
T	Acuity Brands Lighting	R605L 40K 90CRI PDIM SP	10.5 W	CONTRACTOR TO PROCURE ALL ELEMENTS REQUIRED FOR INSTALLATION. INCLUDING TRACK. CONSULT SUPPLIER.
W1	Acuity Brands Lighting	WDGE2 LED P3 40K 90CRI T3M MVOLT	32.0 W	EXTERIOR WALL PACK
X	LITHONIA LIGHTING	LRP-120/27-N	1.9 W	EXIT SIGN, INTERGRAL 90 MIN EMERGENCY BATTERY BACKUP

Cabral Engineering Inc
Engineering - Consulting - Project Management
1058 Palm Cover Dr, Orlando, FL 32835
(321) 246 - 4041 C.A. No. 33227
CEI Project #22.63

ARCHITECTURE + ENGINEERING
License No. 30900
License No. 26002939
1230 Oakley Seaver Drive, Suite 200 - Clermont, FL 34711
P: 888-850-FFAE (3323)
www.forefrontae.com
FOREFRONT
Service Beyond Design

REVISION
0 00/00/00

AGING FACILITY
2274 US HIGHWAY 331 N PAXTON FL 32567
LIGHTING PLANS

ANY DISCREPANCY OR ERROR IN DIMENSIONS OR NOTES SHALL BE BROUGHT TO THE ATTENTION OF THE DESIGN PROFESSIONAL FOR CLARIFICATION PRIOR TO COMMENCEMENT OF CONSTRUCTION.

JOB #: 21-17367
DATE: 07/21/23

E301

C:\services\Cucuta\OneDrive - cabralengineering.com\DESIGN\ACTIVE\Paxton Senior Center\02 Client Input\20230531 AR update\Aging Facility - Standard\TTB; Plot Date: ---,---; Plotted By: MichaelCucuta

C FOREFRONT ARCHITECTURE & ENGINEERING LLC 2014 THIS DOCUMENT AND/OR THE DESIGN CONCEPTS EXPRESSED HEREIN ARE THE PROPERTY OF FOREFRONT ARCHITECTURE & ENGINEERING LLC AND ALL RIGHTS OF OWNERSHIP, INCLUDING COPYRIGHT OF INTELLECTUAL PROPERTY, ARE RESERVED. ANY REPRODUCTIONS, COPYING, OR USE OF THIS DOCUMENT AND/OR THE DESIGN CONCEPT WITHOUT THE WRITTEN CONSENT OF FOREFRONT ARCHITECTURE & ENGINEERING LLC IS STRICTLY PROHIBITED AND PROTECTED BY UNITED STATES AND INTERNATIONAL LAW. IF PRINTED ON 11X17 SCALE IS HALF THE SIZE NOTED.

208V SINGLE PHASE CIRCUIT LENGTH													
BREAKER AMPACITY (AMPS)	MAX CIRCUIT LOAD (AMPS)	MAX LENGTH (FT)											
		#12 AWG	#10 AWG	#8 AWG	#6 AWG	#4 AWG	#3 AWG	#2 AWG	#1 AWG	1/O	2/O	3/O	4/O
20	4	378	584	928	1496	-	-	-	-	-	-	-	-
20	8	189	292	464	739	-	-	-	-	-	-	-	-
20	12	120	189	309	498	774	-	-	-	-	-	-	-
20	16	86	137	223	361	584	-	-	-	-	-	-	-
30	24	-	86	154	240	395	500	-	-	-	-	-	-
40	32	-	-	120	189	292	370	460	580	-	-	-	-
50	40	-	-	86	137	240	300	360	460	620	-	-	-
60	48	-	-	-	120	189	250	310	385	520	610	760	-
70	56	-	-	-	-	172	210	260	335	445	515	655	825
80	64	-	-	-	-	150	185	230	290	380	450	575	725
90	72	-	-	-	-	-	162	200	260	340	400	510	640
100	80	-	-	-	-	-	148	185	230	310	365	460	580
110	88	-	-	-	-	-	-	165	210	280	330	420	525
125	100	-	-	-	-	-	-	-	180	245	290	365	460
150	120	-	-	-	-	-	-	-	-	205	240	310	385

NOTE:
1. FOR 240V SINGLE PHASE, MULTIPLY LENGTH BY 1.15.
2. FOR 277V SINGLE PAHSE, MULTIPLY LENGTH BY 1.32.
3. FOR 480V SINGLE PHASE, MULTIPLY LENGTH BY 2.3.

208V THREE PHASE CIRCUIT LENGTH													
BREAKER AMPACITY (AMPS)	MAX CIRCUIT LOAD (AMPS)	MAX LENGTH (FT)											
		#12 AWG	#10 AWG	#8 AWG	#6 AWG	#4 AWG	#3 AWG	#2 AWG	#1 AWG	1/O	2/O	3/O	4/O
20	4	421	649	1040	-	-	-	-	-	-	-	-	-
20	8	210	325	520	832	-	-	-	-	-	-	-	-
20	12	134	210	347	561	875	-	-	-	-	-	-	-
20	16	96	153	250	407	660	-	-	-	-	-	-	-
30	24	-	96	173	270	447	568	-	-	-	-	-	-
40	32	-	-	135	213	330	420	525	662	-	-	-	-
50	40	-	-	97	155	272	341	411	525	707	-	-	-
60	48	-	-	-	135	214	284	354	439	593	697	868	-
70	56	-	-	-	-	195	239	297	382	508	589	749	946
80	64	-	-	-	-	170	210	263	331	434	514	657	831
90	72	-	-	-	-	-	184	228	297	388	457	583	734
100	80	-	-	-	-	-	168	211	263	354	417	526	665
110	88	-	-	-	-	-	-	189	240	320	377	480	602
125	100	-	-	-	-	-	-	-	206	280	332	417	528
150	120	-	-	-	-	-	-	-	-	234	275	355	442

NOTE:
1. FOR 240V 3-PHASE, MULTIPLY LENGTH BY 1.15.
2. FOR 480V 3-PHASE, MULTIPLY LENGTH BY 2.3.

120V SINGLE PHASE CIRCUIT LENGTH						
BREAKER AMPACITY (AMPS)	MAX CIRCUIT LOAD (AMPS)	MAX LENGTH (FT)				
		#12 AWG	#10 AWG	#8 AWG	#6 AWG	#4 AWG
20	4	220	340	540	870	-
20	8	110	170	270	430	690
20	12	70	110	180	290	450
20	16	50	80	130	210	340
30	24	-	50	90	140	230
40	32	-	-	70	110	170
50	40	-	-	50	80	140
60	48	-	-	-	70	110
70	56	-	-	-	-	100

CIRCUIT LENGTH NOTES

1. UON, CIRCUIT MAXIMUM DISTANCE IS BASED ON NEC CHAPTER 9, TABLE 8 CONDUCTOR PROPERTIES FOR COATED COPPER CONDUCTORS AT 75 DEGREES CELSIUS. CONTRACTOR SHALL RECALCULATE AMPACITIES AND CIRCUIT LENGTHS WHEN USING ALUMINUM OR IF TEMPERATURE RATINGS ARE DIFFERENT.
2. BASED OF MAX VD=3%.
3. BASED ON UP TO 3 CURRENT-CARRYING CONDUCTORS IN A RACEWAY. CONTRACTOR SHALL DE-RATE PER NEC AS REQUIRED WHEN INSTALLING MORE THAN 3 CURRENT-CARRYING CONDUCTORS IN A SINGLE RACEWAY.
4. SIZE CONDUIT BASED ON TYPE FOR A MAX 40% FILL.
5. CONTRACTOR SHALL SIZE GROUND CONDUCTOR PER NEC AND INCREASE AS REQUIRED FOR VOLTAGE DROP.
6. CONTRACTOR SHALL USE CABLE REDUCERS WHEN REQUIRED TO CONNECT UPSIZED CONDUCTORS.

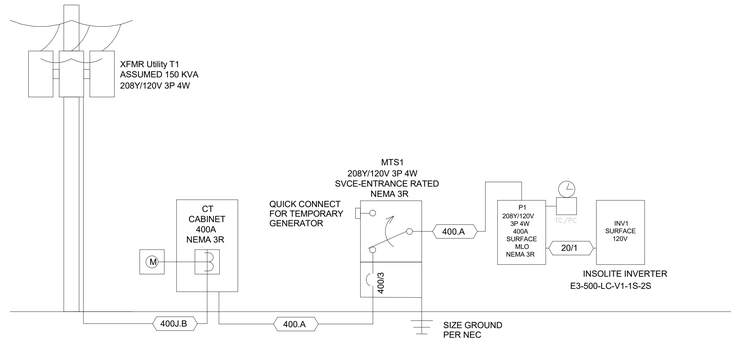

FEEDER SCHEDULE

ID	FEEDER AMPS	CONDUIT AND FEEDER
20/1	20	1#12,#12N,#12G,4"C
400.A	400	3#600kcmil,#600kcmil N,#2G,4"C
400J.B	400	3#600kcmil,#600kcmil N,#1/0G,4"C

USE CU GROUNDS

VOLTAGE DROP SCHEDULE

DEVICE	FEEDER		
	VOLTAGE DROP	WIRE SIZE	LENGTH
CT CABINET	1.07%	#600kcmil	100'
MTS1	1.23% / 0.43%	#600kcmil / #600kcmil	15' / IGNORED
P1	1.44%	#600kcmil	20'
INV1	1.72%	#12	40'

RISER DIRAGRAM NOTES:

1. ALL CONDUCTORS ARE 75 DEG COPPER.
2. SCA REPERESENTS THE AVAILABLE FAULT CURRENT AND THUS THE MINIMUM FAULT CURRENT RATING REQUIRED FOR THE EQUIPMENT.
3. CABLE LENGTHS ARE ESTIMATED FOR VOLTAGE DROP AND FAULT CURRENT CALCULATION. CONTRACTOR SHALL VERIFY WITH UTILITY COMPANY FOR EXACT LOCATION OF SERVICE TRANSFORMER BEFORE ESTIMATING PROJECT COSTS.
4. ALL OUTDOOR ELECTRICAL EQUIPMENT SHALL HAVE A MINIMUM NEMA RATING OR 3R.

FAULT CURRENT SCHEDULE

DEVICE	FAULT	AIC RATING	L-L VOLTS	TRANSFORMER		
				KVA	Z%	FAULT AT PRIMARY
Utility T1	27,800	65,000	208V	150	2	UTILITY
CT CABINET	13,761	22,000	208V			
MTS1	12,778	22,000	208V			
P1	11,665	22,000	208V			
INV1	1,416	22,000	120V			

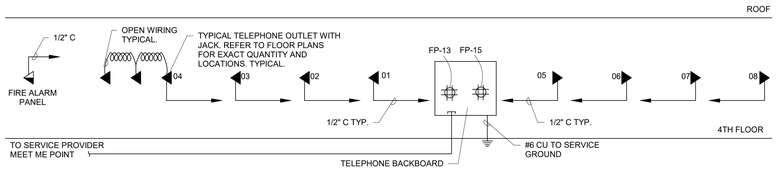

TELECOM/DATA RISER NOTES:

1. THE TELECOM/DATA RISER DIAGRAM IS PROVIDED TO COMMUNICATE THE OVERALL PROJECT SCOPE. THE ENGINEER HAS SHOWN SUGGESTED LOCATIONS

   FOR TELECOM/DATA DROPS THAT ALLOW FOR MINIMUM OPERABILITY OF A TELECOM/DATA SYSTEM. THE CONTRACTOR AND/OR LOW VOLTAGE CONSULTANT SHALL CONSULT THE OWNER TO DETERMINE ACTUAL TELECOM/DATA SYSTEM NEEDS PRIOR TO ROUGH-IN AND SYSTEM PROCUREMENT.
2. USE CAT 6 CONDUCTORS. PROVIDE ONE CAT 6 TELEPHONE CONDUCTOR AND ONE CAT 6 DATA CONDUCTOR TO EACH DATA/TELEPHONE OUTLET. HOMERUN

   EACH DATA/TELEPHONE PORT TO THE EXISTING TELECOMM BACKBOARD. CONSULT OWNER FOR BACKBOARD LOCATION.
3. CONTRACTOR SHALL TERMINATE ALL TELEPHONE/DATA OUTLETS THROUGHOUT SCOPE AREA.

2 TYPICAL TELECOM/DATA RISER DIAGRAM

SCALE: N.T.S.

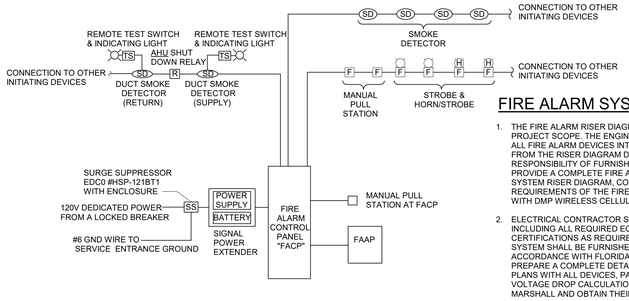

FIRE ALARM SYSTEM NOTES:

1. THE FIRE ALARM RISER DIAGRAM IS PROVIDED IN ORDER TO COMMUNICATE THE OVERALL PROJECT SCOPE. THE ENGINEER HAS MADE A GOOD FAITH EFFORT TO IDENTIFY AND INCLUDE ALL FIRE ALARM DEVICES INTO THE RISER DIAGRAM. THE OMISSION OF A PARTICULAR DEVICE FROM THE RISER DIAGRAM DOES NOT ALLEVIATE THE CONTRACTOR FROM THE RESPONSIBILITY OF FURNISHING AND INSTALLING THAT DEVICE. THE CONTRACTOR SHALL PROVIDE A COMPLETE FIRE ALARM SYSTEM SUBMITTAL TO INCLUDE DEVICE LOCATIONS, FULL SYSTEM RISER DIAGRAM, CONDUCTOR SIZES. BATTERY CALCULATIONS, ETC. PER REQUIREMENTS OF THE FIRE ALARM CODE. FIRE ALARM CONTROL PANEL TO BE FURNISHED WITH DMP WIRELESS CELLULAR COMMUNICATOR.
2. ELECTRICAL CONTRACTOR SHALL PROVIDE A COMPLETE AND OPERABLE FIRE ALARM SYSTEM INCLUDING ALL REQUIRED EQUIPMENT, DEVICES, COMPONENTS, PERMITS, INSPECTIONS AND CERTIFICATIONS AS REQUIRED BY LOCAL AUTHORITY HAVING JURISDICTION. FIRE ALARM SYSTEM SHALL BE FURNISHED WITH A DMP WIRELESS CELLULAR COMMUNICATOR. IN ACCORDANCE WITH FLORIDA ADMINISTRATIVE CODE 61G15-32.008 THE CONTRACTOR SHALL PREPARE A COMPLETE DETAILED FIRE ALARM SYSTEM SHOP DRAWING INCLUDING FLOOR PLANS WITH ALL DEVICES, PANELS, WIRING ETC. AS WELL AS EQUIPMENT CUT SHEETS AND VOLTAGE DROP CALCULATIONS (IF REQUIRED) AND SHALL SUBMIT THEM TO THE FIRE MARSHALL AND OBTAIN THEIR APPROVAL PRIOR TO COMMENCEMENT OF THE WORK.
3. THE FIRE ALARM SYSTEM SHALL BE INSTALLED PER NFPA72. AND THE APPROVED CONTRACTOR SHALL PROVIDE SHOP DRAWINGS AND SECURE A SEPARATE PERMIT.

1 TYPICAL FIRE ALARM RISER DIAGRAM

SCALE: N.T.S.

INVERTER INV1

Location: | **Volts:**
Supply From: | **Phases:** 1
Mounting: SURFACE | **Wires:**
Enclosure: Type 1

Notes:

CKT	Circuit Description	# of Poles	Trip Rating	Load
1	EGRESS LIGHTING	1	20 A	290 VA
2	EGRESS LIGHTING - RAISED FLOOR	1	20 A	173 VA
3				
4				
				463 VA
				4 A

Legend:

Load Classification	Connected Load	Panel Totals	
Lighting	463 VA		
		Total Connected Load:	463 VA
		Total Connected Current:	4 A

Notes:

P1

Location: | **Volts:** 120/208 Wye | **A.I.C. Rating:** 22KA
Supplied From: | **Phases:** 3 | **Mains Type:** MLO
Mounting: Surface | **Wires:** 4 | **Mains Rating:** 400 A
Enclosure: 3R

#	Circuit Description	Trip (A)	P	A		B		C		P	Trip (A)	Circuit Description	#
1	LGT - EXTERIOR	20	1	1.3	1.5					1	20	LIGHTING CONTACTOR	2
3	LGT - INTERIOR	20	1			1.3	1.7			1	20	EF1	4
5	FACP	20	1					1.5	1.7	1	20	EF3	6
7	REC - SERVING AREA	20	1	3.0	5.8					1	20	LTG - SPOTS LIGHTS AND...	8
9	INV1	20	1			3.9	6.0			1	20	REC - KITCHEN	10
11	DISPOSAL	20	1					4.2	6.7	1	20	LGT - RAISED FLOOR	12
13	REC - COMMUNITY HALL	20	1	7.5	10.5					1	20	REC - OFFICE 1, MEN R/R	14
15	REC - SEATING AREA	20	1			7.5	9.6			1	20	LGT - RAISED FLOOR	16
17	RR HAND DRYERS	20	1					8.3	1.5	1	20	REC - REF.	18
19	REC - OFFICE 2, WOMEN R/R	20	1	10.5	13.2					1	20	REC - RECEPTION AREA....	20
21	REC - WATER FOUNTAIN	20	2			2.4	71.5			2	80	AHU-1	22
23								2.4	71.5				24
25	PARKING LOT LIGHTING	20	2	9.8	21.6					2	30	EWH	26
27						5.3	21.6						28
29	CU-1	35	2					34.4	1.7	1	20	SIGNAGE	30
31				34.4	1.5					1	20	REC - DISHWASHER	32
33	REC - REF	20	1			1.5	1.7			1	20	REC - WOMEN REST.	34
35													36
37	P-1	20	1	1.7	36.2								38
39	CU-3	40	2			36.2	36.2			2	40	CU-2	40
41								36.2	36.2				42
43	AHU-2	80	2	71.5	36.2					2	40	CU-4	44
45						71.5	1.0			1	20	PC/TC	46
47	AHU-4	80	2					71.5					48
49				71.5	--								50
51	AHU-3	80	2			71.5	--			3	--	SPD	52
53								71.5	--				54

Subfeeds and Feed-Through

#	Description	Poles	A (A)	B (A)	C (A)	Trip (A)	Remarks
			0 A	0 A	0 A		
	Total Load		36093 VA	36905 VA	36692 VA		
	Total Amps		301 A	308 A	307 A		

Load Classification	Connected Load	Demand...	Estimated Demand	Panel Totals	
HVAC	89232 VA	125.00%	111540 VA		
Other	5309 VA	125.00%	6636 VA	Total Conn. Load:	109688 VA
Receptacle	7200 VA	100.00%	7200 VA	Total Est. Demand:	135310 VA
Spare	120 VA	125.00%	150 VA	Total Conn.:	304 A
Power	3500 VA	125.00%	4375 VA	Total Est. Demand:	376 A
Lighting	4392 VA	125.00%	5490 VA		

Notes:

Cabral Engineering Inc
Engineering - Consulting - Project Management
1058 Palm Cover Dr, Orlando, FL 32835
(321) 246 - 4041 C.A. No. 33227
CEI Project #22.63

N

REVISION
0 00/00/00

ARCHITECTURE + ENGINEERING
License No. 30900
1230 Oakley Seaver Drive, Suite 200 - Clermont, FL 34711
P: 888-850-FFAE (3323)
www.forefrontae.com
FOREFRONT
Service Beyond Design

FRANCISCO J. CABRAL LICENSE No. 87110 STATE OF FLORIDA PROFESSIONAL ENGINEER

AGING FACILITY
2274 US HIGHWAY 331 N PAXTON FL 32567
ELECTRICAL DIAGRAMS AND SCHEDULES

ANY DISCREPANCY OR ERROR IN THESE PLANS SHALL BE IMMEDIATELY BROUGHT TO THE ATTENTION OF THE DESIGN PROFESSIONAL FOR CLARIFICATION PRIOR TO COMMENCEMENT OF CONSTRUCTION.

JOB #: 21-17267
DATE: 07/21/23

E701

C:\rachaelCucuta\OneDrive - cabralengineering.com\DESIGN\ACTIVE\Paxton Senior Center\02 Client Input\20230531 AR update\Aging Facility - Standard(1TTB; Plot Date: ---,---; Plotted By: MichaelCucuta

C FOREFRONT ARCHITECTURE & ENGINEERING LLC 2014 THIS DOCUMENT AND/OR THE DESIGN CONCEPTS EXPRESSED HEREIN ARE THE PROPERTY OF FOREFRONT ARCHITECTURE & ENGINEERING LLC AND ALL RIGHTS OF OWNERSHIP, INCLUDING COPYRIGHT OF INTELLECTUAL PROPERTY, ARE RESERVED. ANY REPRODUCTIONS, COPYING, OR USE OF THIS DOCUMENT AND/OR THE DESIGN CONCEPT WITHOUT THE WRITTEN CONSENT OF FOREFRONT ARCHITECTURE & ENGINEERING LLC IS STRICTLY PROHIBITED AND PROTECTED BY UNITED STATES AND INTERNATIONAL LAW. IF PRINTED ON 11X17 SCALE IS HALF THE SIZE NOTED.

System No. W-L-1001
F Rating - 1,2,3, and 4 Hr (See Items 2 and 3)
T Rating - 0, 1, 2, 3, and 4 Hr (See Item 3)
L Rating At Ambient - less than 1 CFM/sq ft
L Rating At 400 F - less than 1 CFM/sq ft

1. Wall Assembly - The 1, 2, 3 or 4 hr fire-rated gypsum wallboard/stud wall assembly shall be constructed of the materials and in the manner described in the individual U300 or U400 Series Wall or Partition Designs in the UL Fire Resistance Directory and shall include the following construction features:
A. Studs - Wall framing may consist of either wood studs (max 2 hr fire rated assemblies) or steel channel studs. Wood studs to consist of nom 2 by 4 in. (51 by 102 mm) Lumber spaced 16 in. (406 mm) OC with nom 2 by 4 in. (51 by 102 mm Lumber end plates and cross braces. Steel studs to be min 3-5/8 in. (92 mm) wide by 1-3/8 in. (35 mm) deep channels spaced max 24 in. (610 mm) OC.
B. Gypsum Board* - Nom 1/2 or 5/8 in. (13 or 16 mm) thick, 4 ft. (122 cm) wide with square or tapered edges. The gypsum wallboard type, thickness, number of Layers, fastener type and sheet orientation shall be as specified in the individual U300 or U400 Series Design in the UL Fire Resistance Directory. Max diam of opening is 26 in. (660 mm).
2. Through Penetrates - One metallic pipe, conduit or tubing installed either concentrically or eccentrically within the firestop system. The annular space between pipe, conduit or tubing and periphery of opening shall be min of 0 in. (0 mm) (point contact) to max 2 in. (51 mm). Pipe, conduit or tubing to be rigidly supported on both sides of wall assembly. The following types and sizes of metallic pipes, conduits or tubing may be used:
A. Steel Pipe - Nom 24 in. (610 mm) diam (or smaller) Schedule 10 (or heavier) steel pipe.
B. Iron Pipe - Nom 24 in. (610 mm) diam (or smaller) service weight (or heavier) cast iron soil pipe, nom 12 in. (305 mm)diam (or smaller) or Class 50 (or heavier) ductile iron pressure pipe.
C. Conduit - Nom 6 in. (152 mm) diam (or smaller) steel conduit or nom 4 in. (102 mm) diam (or smaller) steel electrical metallic tubing
D. Copper Tubing - Nom 6 in. (152 mm) diam (or smaller) Type L (or heavier) copper tubing.
E. Copper Pipe - Nom 6 in. (152 mm) diam (or smaller) Regular (or heavier) copper pipe.
F. Through Penetrating Product* - Metal Piping - The following types of steel flexible metal gas piping may be used:
1. Nom 2 in. (51 mm) diam (or smaller) steel flexible metal gas piping. Plastic covering on piping may or may not be removed on both sides of floor or wall assembly.OMEGA FLEX INC
2. Nom 1 in. (25 mm) diam (or smaller) steel flexible metal gas piping. Plastic covering on piping may or may not be removed on both sides of floor or wall assembly. TITEFLEX CORP A BUNDY CO
3. Nom 1 in. (25 mm) diam (or smaller) steel flexible metal gas piping. Plastic covering on piping may or may not be removed on both sides of floor or wall assembly. WARD MGF INC

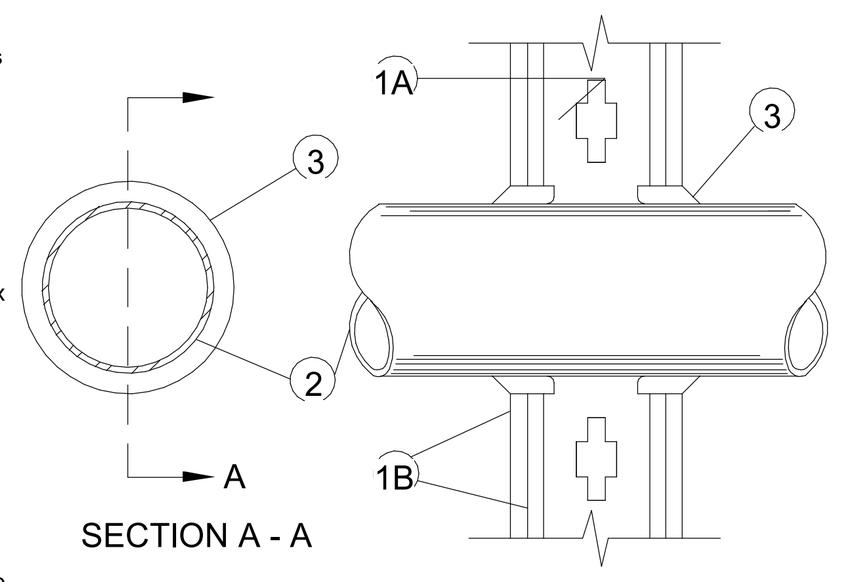

Max Pipe or Conduit Diam in. (mm)	F Rating Hr	T Rating Hr
1 (25)	1 or 2	0+,1 or 2
1 (25)	3 or 4	3 or 4
4 (102)	1 or 2	0
6 (152)	3 or 4	0
12 (305)	1 or 2	0

3. Fill, void or Cavity material* - Caulk or sealant - Min 5/8, 1-1/4,1-7/8 and 2-1/2 in. (16, 32, 48 and 64 mm) thickness of caulk for 1, 2, 3 and 4 hr rated assemblies, respectively, applied within annulus, flush with both surfaces of wall. Min 1/4 in. (6 mm) diam bead of caulk applied to gypsum board/penetrate interface at point contact Location on both sides of wall. The hourly F Rating of the firestop system is dependent upon the hourly fire rating of the wall assembly in which it is installed, as shown in the following table. The hourly T Rating of the firestop system is dependent upon the type or size of the pipe or conduit and the hourly fire rating of the wall assembly in which it is installed, as tabulated to the left.

+When copper pipe is used, T Rating is 0 hr.*Bearing the UL Classification Marking

7 SYSTEM NO. W-L-1001
SCALE: N.T.S.

SYSTEM NO W-L-3015
(FORMERLY SYSTEM NO. 328)
F RATINGS-- 1 AND 2 HR (SEE ITEM 3)
T RATINGS-- 0, 3/4, AND 2 HR (SEE ITEM 2)
L RATING AT AMBIENT-- LESS THAN 1 CFM/sq ft (SEE ITEM 3)
L RATING AT 400° F-- LESS THAN 1 CFM/sq ft (SEE ITEM 3)

1. Wall Assembly - The 1 or 2 hr fire rated gypsum wallboard/stud wall assembly shall be constructed of the materials and in the manner described in the individual U300 or U400 Series wall or Partition Designs in the UL Fire Resistance Directory and shall include the following construction features:
A. Studs - Wall framing may consist of either wood studs or steel channel studs. Wood studs to consist of nom 2 by 4 in. l umber spaced 16 in. OC with nom 2 by 4 in. Lumber end plates and cross braces. Steel studs to be min 3-5/8 in. wide by 1-3/8 in. deep channels spaced max 24 in. OC.
B. Gypsum Board* - Nom 5/8 in. thick, 4 ft. wide with square or tapered edges. The gypsum wallboard type, number of Layers and sheet orientation shall be as specified in the individual Wall and Partition Design. Max diam of openings cut in gypsum Wallboard is 2 in.
C. Fasteners- When wood stud framing is employed, gypsum wallboard attached to studs with cement coated nails as specified in the individual
Wall or Partition Design. When steel channel stud framing is employed, gypsum wallboard attached to studs with Type S self-drilling, self-tapping bugle-head steel screws as specified in the individual Wall or Partition Design. Diam of circular through opening cut through gypsum wallboard on each side of wall assembly to be min 1/4 in. to max 11/16 in. Larger than diam of through penetrating product (Item 2) installed in through opening. Side edge of circular opening to be min 3 in. from nearest stud in wall cavity.
2. Trough Penetrating Product* - Max four copper conductor No. 2 AWG (or smaller) aluminum or steel Armored Cable+ or Metal-Clad Cable+. Max one armored cable or metal clad cable to be installed near center of circular opening in gypsum wallboard. Through penetrating product to be rigidly supported on both sides of wall assembly. When installed in 1 hr fire rated wall assembly, T Rating is 0 hr. When installed in 2 hr fire rated wall assembly, T Rating is 3/4 hr when max No. 2 AWG cable is used and 2 hr when max 12 AWG cable is used.
AFC CABLE SYSTEMS INC
3. Fill, Void or CavityMaterial* - Caulk fill material forced into annular space around entire circumference of through penetrating product to completely fill opening in gypsum wallboard on each side of the wall assembly. A min 5/8 in. thickness of caulk is required for the 1 hr F Rating. A min 1-1/4 in. thickness of caulk is required for the 2 hr F Rating.
*Bearing the UL Classification Marking

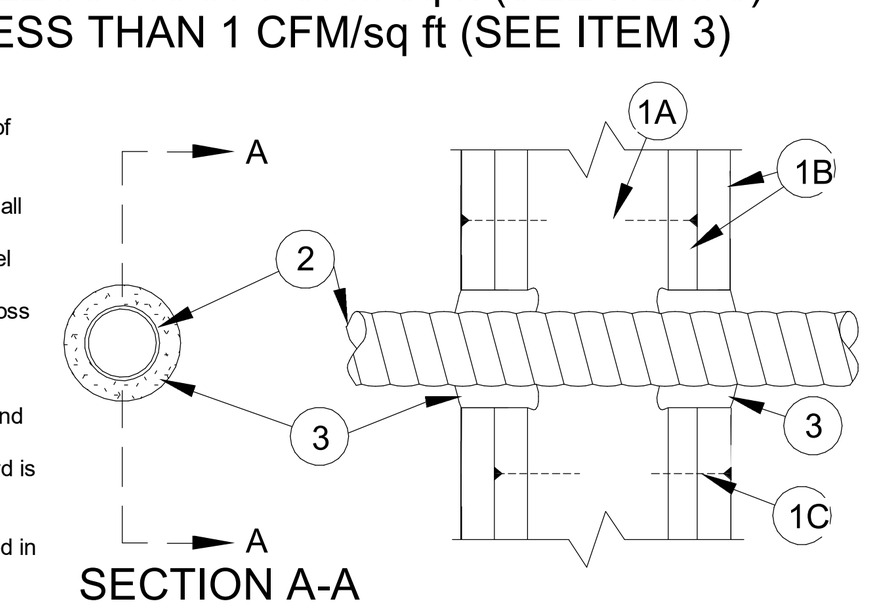

8 SYSTEM NO. W-L-3015
SCALE: N.T.S.

System No. C-AJ-1044
F Rating - 2,3, and 4 Hr (See Items 2A and 4)
T Rating - 0 Hr
L Rating At Ambient - 2 CFM/sq ft
L Rating At 400 F - less than 1 CFM/sq ft
W Rating - Class I (See Item 4)

1. Floor or Wall Assembly - Lightweight or normal weight (100-150 pcf or 1600-2400 kg/m3) concrete. Except as noted in table under Item 4, min thickness of solid concrete floor or wall assembly is 4-1/2 in. (114 mm). Floor may also be constructed of any min 6 in. (152 mm) thick UL Classified hollow core Precast Concrete Units*. When floor is constructed of hollow core precast concrete units, packing material (Item 3) and caulk fill material (Item 4) to be installed symmetrically on both sides of floor, flush with floor surface. Wall assembly may also be constructed of any UL Classified Concrete Blocks*. Max diam of opening is in solid Lightweight or normal weight concrete. Floor is 32 in. (813 mm). Max diam of opening in floor constructed of hollow-core precast concrete units is 7 in. (178 mm). See Concrete Blocks (CAZT) and Precast Concrete Units (CFTV) categories in the Fire Resistance Directory for names of manufacturers.
1A. Steel Sleeve (Optional, not shown) - Max 15 in. (381 mm) ID (or smaller) Schedule 10 (or heavier) steel sleeve cast or grouted into floor or wall assembly. Sleeve may extend a max of 2 in. (51 mm) above top of floor or beyond either surface of wall. Max 16 in. (406 mm) ID (or smaller) min 0.028 (0.71 mm) wall thickness (or heavier) galvanized steel sleeve cast or grouted into floor or wall assembly. Sleeve may extend a max of 1/2 in. (13 mm) beyond either surface of floor or wall.
2. Through Penetrates - One metallic pipe, conduit or tubing to be installed either concentrically or eccentrically within the firestop system. Max annular space between pipe, conduit or tubing and edge of through opening or sleeve is dependent on the parameters shown in Item 4. Min annular space between pipe or conduit and edge of through opening is 0 in. (0 mm) (point contact). Pipe conduit or tubing to be rigidly supported on both sides of floor or wall assembly. The following types and sizes of metallic pipes, conduits or tubing may be used:
A. Steel Pipe - Nom 30 in. (762 mm) diam (or smaller) Schedule 10 (or heavier) steel pipe.
B. Iron Pipe - Nom 30 in. (762 mm) diam (or smaller) cast or ductile iron pipe.
C. Conduit - Nom 6 in. (152 mm) diam (or smaller) rigid steel conduit.
D. Conduit - Nom 4 in. (102 mm) diam (or smaller) steel electrical metallic tubing.
E. Copper - Tubing Nom 6 in. (152 mm) diam (or smaller) Type L (or heavier) copper tube.
F. Copper Pipe - Nom 6 in. (152 mm) diam (or smaller) Regular (or heavier) copper tube.
3. Packing Material - Polyethylene backer rod or nom 1 in. (25 mm) thickness of tightly- packed mineral wool batt or glass fiber insulation firmly packed into opening as a permanent form. Packing material to be recessed from top surface of floor or from both surfaces of wall as required to accommodate the required thickness of caulk fill material (Item 4).
4. Fill, void or Cavity material* - Caulk or sealant - Applied to fill the annular space flush with top surface of floor. In wall assemblies, required caulk thickness to be installed symmetrically on both sides of wall, flush with wall surface. At point contact Location between penetrate and sleeve or between penetrate and concrete, a min 1/4 in.(6 mm) diam bead of caulk shall be applied at top surface of floor and at both surfaces of wall. The hourly F Ratings and the min required caulk thicknesses are dependent upon a number of parameters, as shown in the following table.

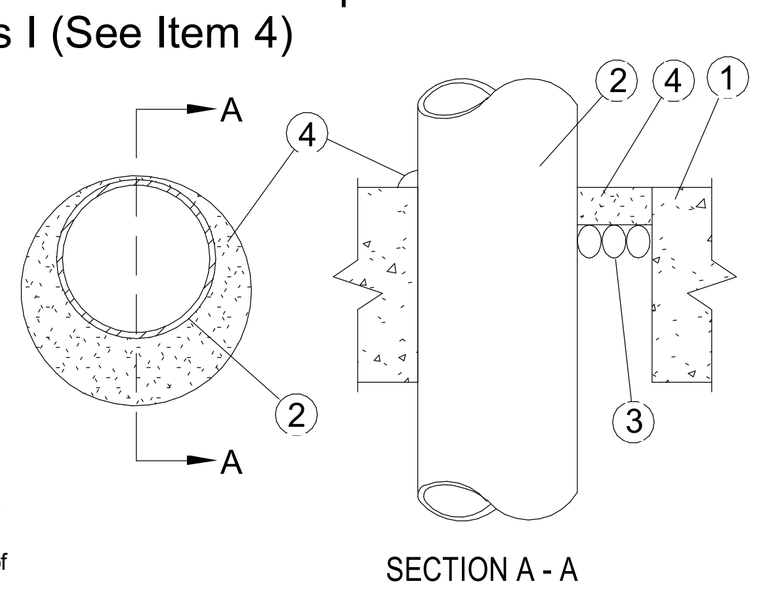

Min Floor or Wall Thkns In. (mm)	Nom Pipe Tube or Conduit Diam in. (mm)	Max Annular Space in. (mm)	Min Caulk Thkns In. (mm)	F Rating Hr
2-1/2 (64)	1/2-12 (13-305)	1-3/8 (35)	1/2 (13)	2
2-1/2 (64)	1/2-12 (13-305)	3-1/4 (83)	1 (25)	2
4-1/2 (114)	1/2-6 (13-152)	1-3/8 (35)	1/4 (6) (a)	2
4-1/2 (114)	1/2-12 (13-305)	1-1/4 (32)	1/2 (13)	3
4-1/2 (114)	1/2-12 (13-305)	2 (51)	1 (25)	3
4-1/2 (114)	1/2-12 (13-305)	2 (51)	1 (25)	3
4-1/2 (114)	1/2-12 (13-305)	3-1/4 (83)	1 (25)	3
4-1/2 (114)	22-30 (558-762)	2 (51)	1 (25)	3
5-1/2 (140)	1/2-6 (13-152)	1-3/8 (35)	1 (25) (b)	4

(a)Min 2 in. (51 mm) thickness of mineral wool batt insulation required in annular space.
(b)Min 1 in. (25 mm) thickness of mineral wool batt insulation required in annular space on both sides of floor or wall assembly. Min 1 in. (25 mm) thickness of caulk to be installed flush with each surface of floor or wall assembly.

*Bearing the UL Classification Marking

9 SYSTEM NO. C-AJ-1044
SCALE: N.T.S.

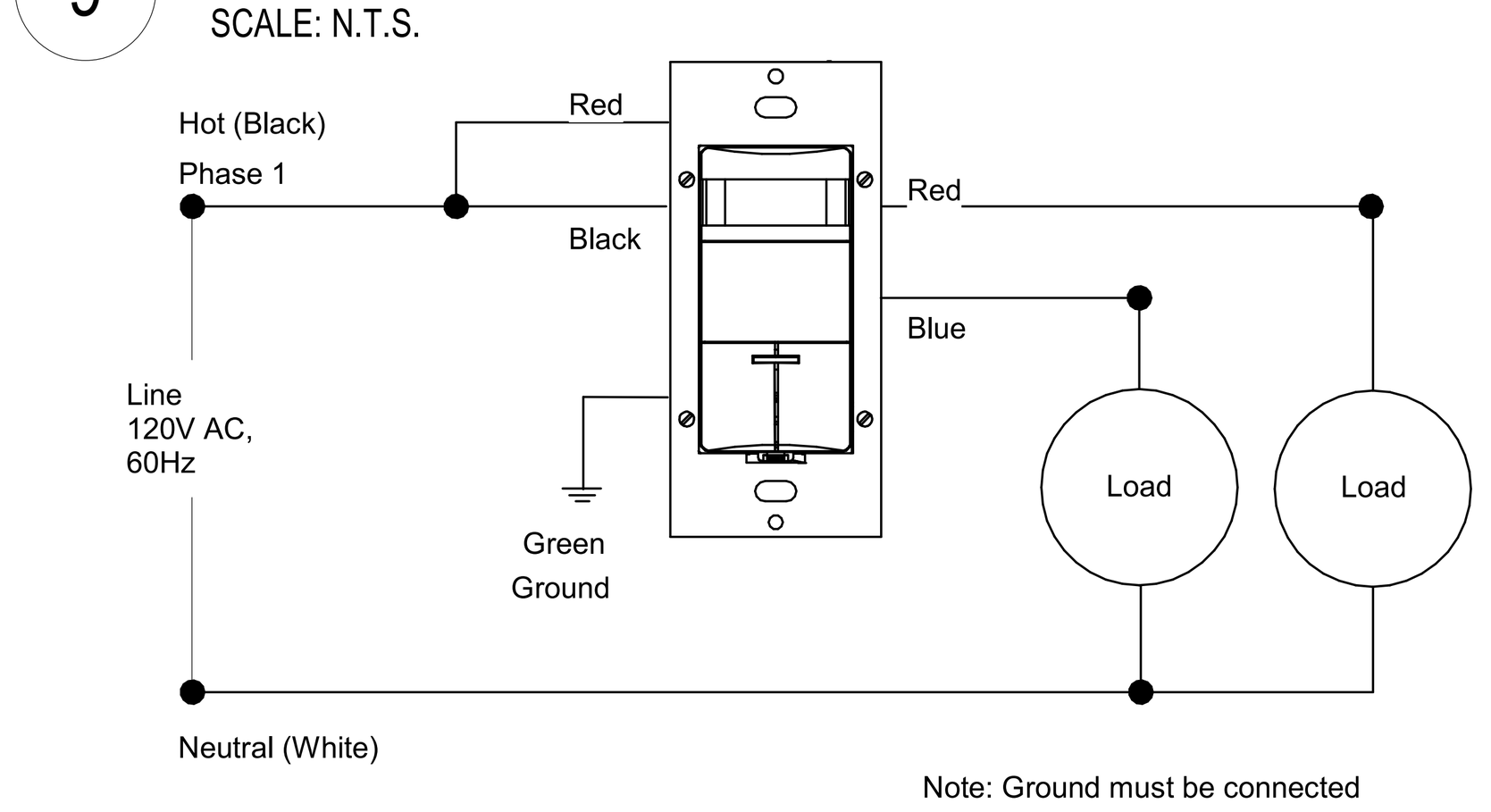

10 WALL-SWITCH OCCUPANCY SENSOR DETAIL
SCALE: N.T.S.

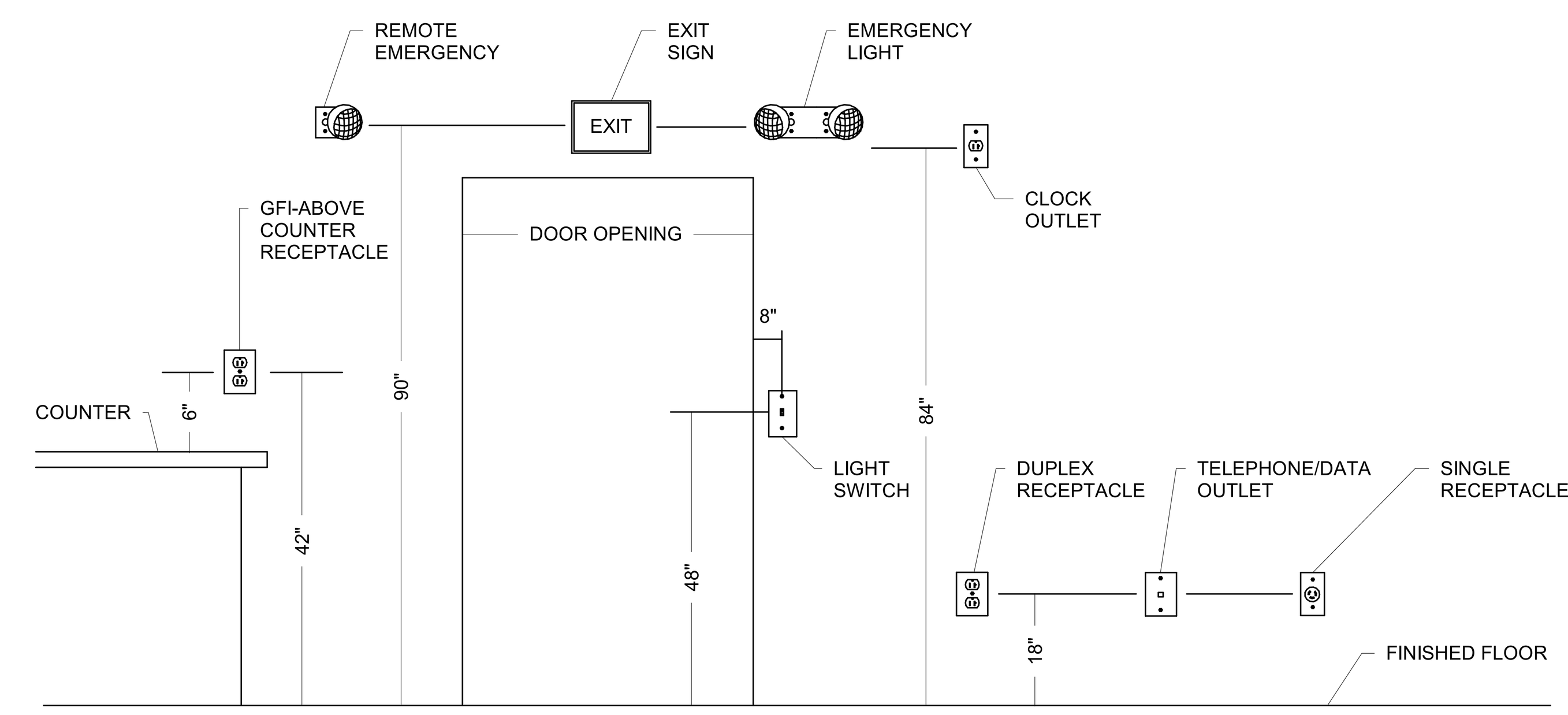

1 MOUNTING HEIGHT DETAIL
SCALE: N.T.S.

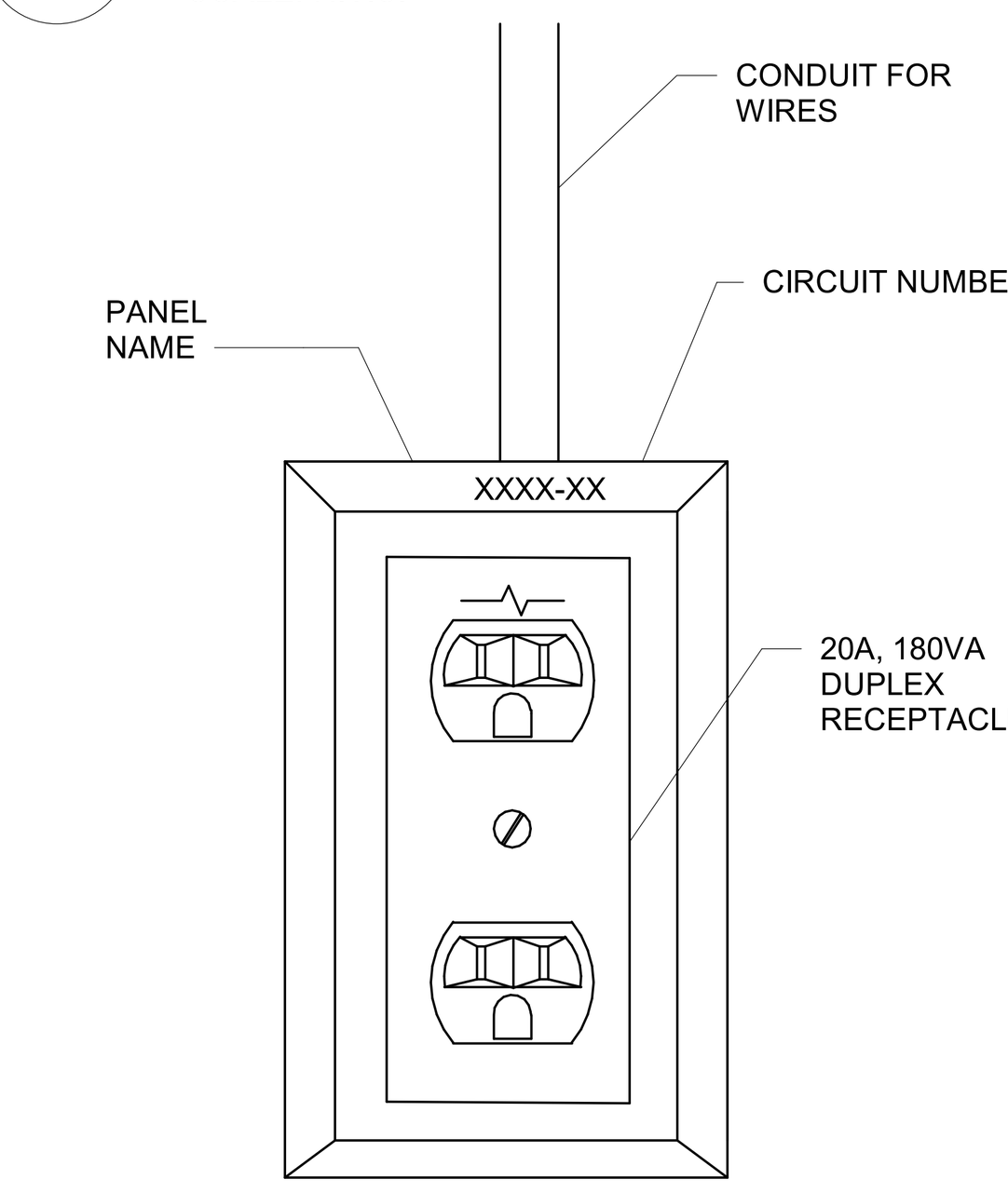

3 POWER OUTLET DETAIL
SCALE: N.T.S.

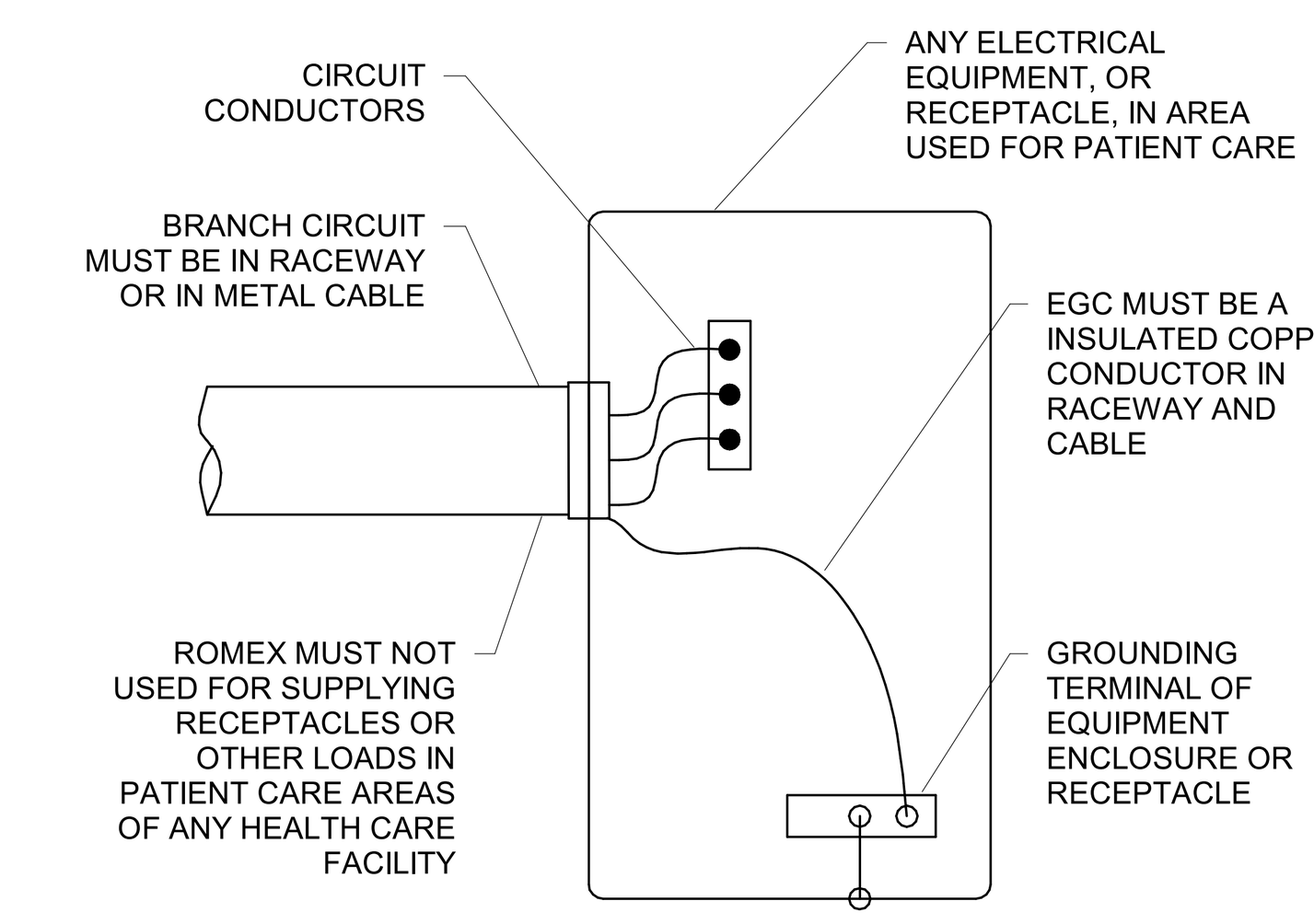

2 REDUNDANT GROUNDING DETAIL
SCALE: N.T.S.

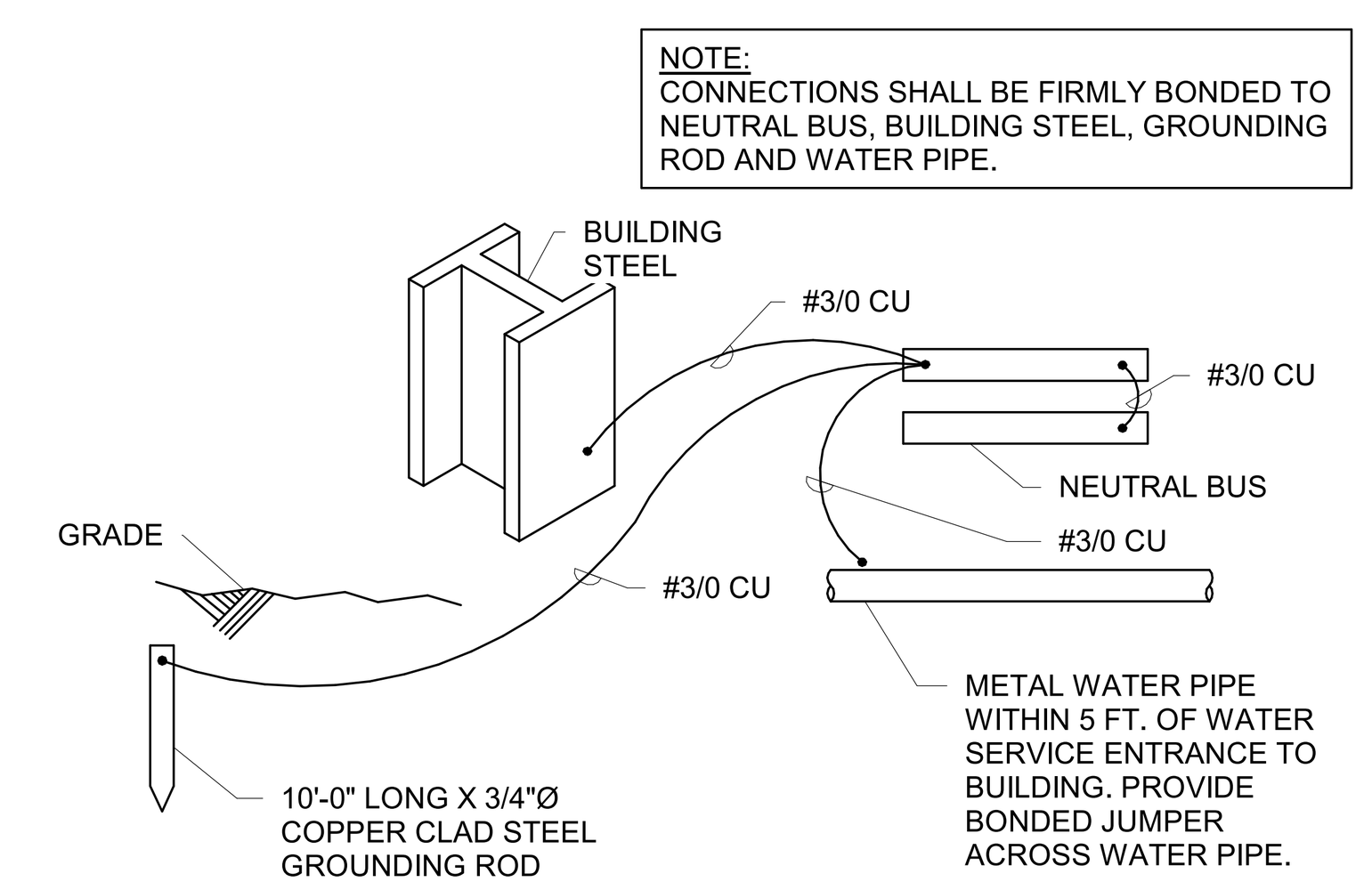

5 GROUNDING SYSTEM DETAIL
SCALE: N.T.S.

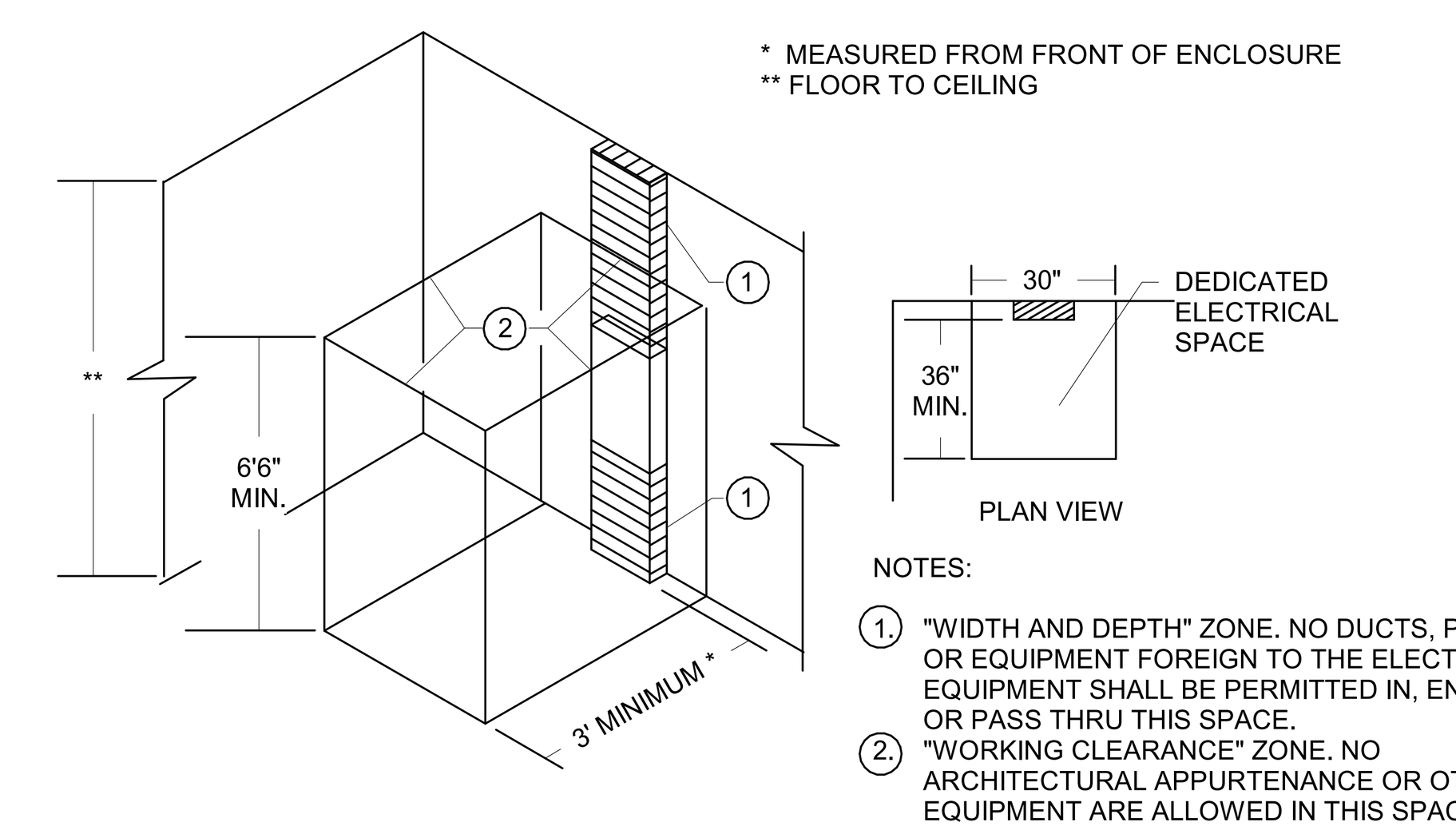

4 PANEL CLEARENCE DETAIL
SCALE: N.T.S.

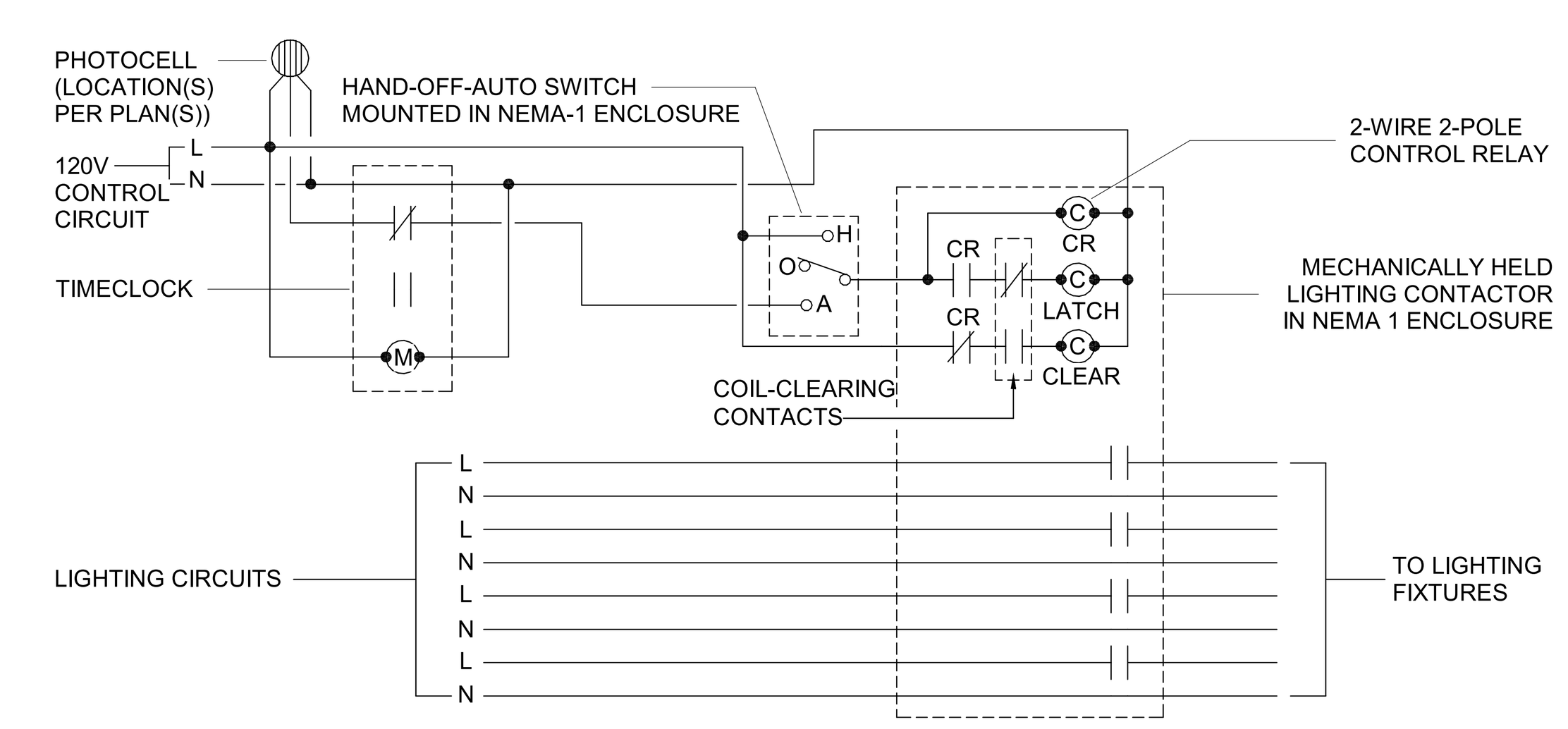

PROVIDE ADDITIONAL LIGHTING CONTACTORS AS REQUIRED. EXACT NUMBER OF POLES VARIES BY PROJECT.
INCLUDE A MINIMUM OF (2) SPARE CONTACTS FOR EACH LIGHTING CONTACTOR ENCLOSURE.

6 LIGHTING CONTACTOR
SCALE: N.T.S.

Cabral Engineering Inc
Engineering - Consulting - Project Management
1058 Palm Cover Dr, Orlando, FL 32835
(321) 246 - 4041 C.A. No. 33227
CEI Project #22.63

REVISION	
0	00/00/00

ARCHITECTURE + ENGINEERING
License No. 26002939 License No. 30900
1230 Oakley Seaver Drive, Suite 200 - Clermont, FL 34711
P: 888-850-FFAE (3323)
www.forefrontae.com
FOREFRONT
Service Beyond Design
FRANCISCO J CABRAL LICENSE No. 87110 STATE OF FLORIDA PROFESSIONAL ENGINEER SEAL

AGING FACILITY
2274 US HIGHWAY 331 N PAXTON FL 32567
ELECTRICAL DETAILS

ANY DISCREPANCY OR ERROR IN DIMENSIONS OR NOTES SHALL BE BROUGHT TO THE ATTENTION OF THE DESIGN PROFESSIONAL FOR CLARIFICATION PRIOR TO COMMENCEMENT OF CONSTRUCTION.

JOB #: 21-17367
DATE: 07/21/23

E901

C:sersichaelCucuta\OneDrive - cabralengineering.com\DESIGN\ACTIVE\Paxton Senior Center\02 Client Input\20230531 AR update\Aging Facility - Standard\TTB; Plot Date: ----,----; Plotted By: MichaelCucuta
C FOREFRONT ARCHITECTURE & ENGINEERING LLC 2014 THIS DOCUMENT AND/OR THE DESIGN CONCEPTS EXPRESSED HEREIN ARE THE PROPERTY OF FOREFRONT ARCHITECTURE & ENGINEERING LLC AND ALL RIGHTS OF OWNERSHIP, INCLUDING COPYRIGHT OF INTELLECTUAL PROPERTY, ARE RESERVED. ANY REPRODUCTIONS, COPYING, OR USE OF THIS DOCUMENT AND/OR THE DESIGN CONCEPT WITHOUT THE WRITTEN CONSENT OF FOREFRONT ARCHITECTURE & ENGINEERING LLC IS STRICTLY PROHIBITED AND PROTECTED BY UNITED STATES AND INTERNATIONAL LAW. IF PRINTED ON 11X17 SCALE IS HALF THE SIZE NOTED.

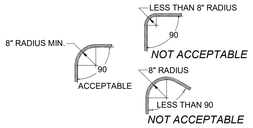

13 TYP. CABLE BEND REQUIREMENTS

SCALE: N.T.S.

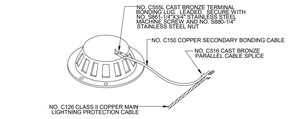

10 TYPICAL ROOF DRAIN BOND

SCALE: N.T.S.

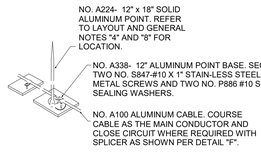

14 TOP MOUNT AIR TERMINAL

SCALE: N.T.S.

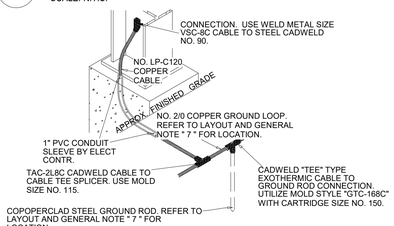

11 CLASS 1 STEEL COLUMN CONN. TO C/P

SCALE: N.T.S.

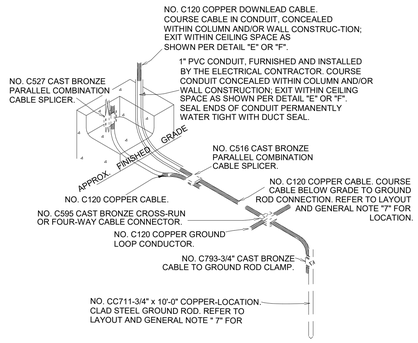

5 CONCEALED DOWNLEAD TO GROUNDING CONN.

SCALE: N.T.S.

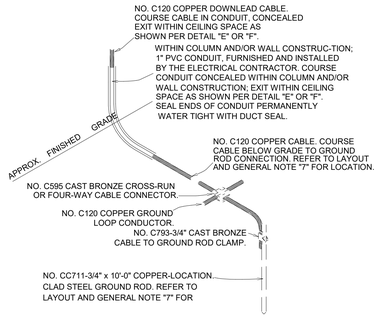

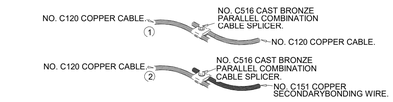

1 TYP. CABLE SPLICERS

SCALE: N.T.S.

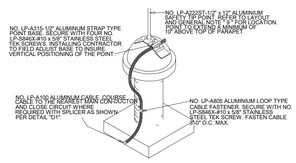

7 EQUIPMENT AIR TERMINAL

SCALE: N.T.S.

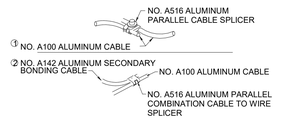

15 TYP. CABLE SPLICER

SCALE: N.T.S.

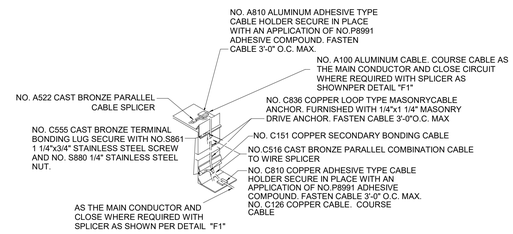

12 EXPOSED DOWNLEAD TO LOWER ROOF

SCALE: N.T.S.

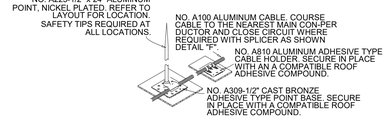

8 MID ROOF AIR TERMINAL

SCALE: N.T.S.

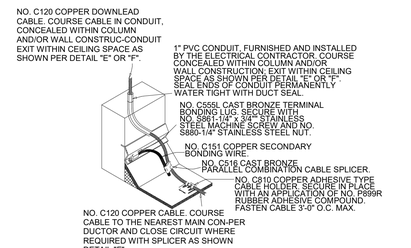

6 CONCEALED DOWNLEAD TO LOWER ROOF

SCALE: N.T.S.

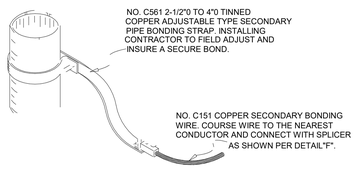

3 TYP. SECONDARY ROOF PIPE BOND

SCALE: N.T.S.

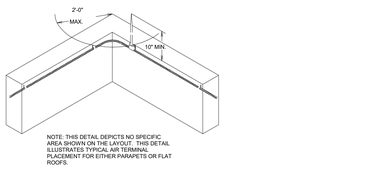

9 TYP. AIR TERMINAL PLACEMENT AT OUTSIDE CORNERS

SCALE: N.T.S.

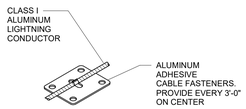

2 TYPICAL LIGHTNING PROTECTION CABLE SUPPORT DETAIL

SCALE: N.T.S

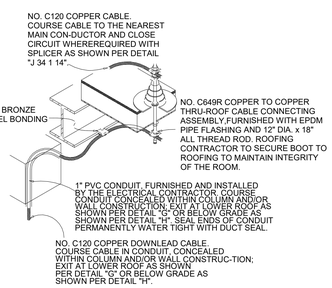

4 THRU-ROOF CABLE CONN.

SCALE: N.T.S.

Cabral Engineering Inc
Engineering - Consulting - Project Management
1058 Palm Cover Dr, Orlando, FL 32835
(321) 246 - 4041 C.A. No. 33227
CEI Project #22.63

N

REVISION
0 00/00/00

ARCHITECTURE + ENGINEERING
License No. 30900
1230 Oakley Seaver Drive, Suite 200 - Clermont, FL 34711
P: 888-850-FFAE (3323)
www.forefront.com
FOREFRONT
Service Beyond Design

REGISTERED LICENSED ARCHITECT STATE OF FLORIDA No. 87110 PROFESSIONAL ENGINEER

AGING FACILITY

2274 US HIGHWAY 331 N PAXTON FL 32567

LIGHTNING PROTECTION DETAILS

ANY DISCREPANCY OR ERROR IN DIMENSIONS OR NOTES SHALL BE BROUGHT TO THE ATTENTION OF THE DESIGN PROFESSIONAL FOR CLARIFICATION PRIOR TO COMMENCEMENT OF CONSTRUCTION.

JOB #: 21-17367
DATE: 07/21/23

E902

C:\sarahael\Cucuta\OneDrive - cabralengineering.com\DESIGN\ACTIVE\Paxton Senior Center\02 Client Input\20230531 AR update\Aging Facility - Standard\TTB; Plot Date: ---:--:--; Plotted By: MichaelCucuta

C FOREFRONT ARCHITECTURE & ENGINEERING LLC 2014 THIS DOCUMENT AND/OR THE DESIGN CONCEPTS EXPRESSED HEREIN ARE THE PROPERTY OF FOREFRONT ARCHITECTURE & ENGINEERING LLC AND ALL RIGHTS OF OWNERSHIP, INCLUDING COPYRIGHT OF INTELLECTUAL PROPERTY, ARE RESERVED. ANY REPRODUCTIONS, COPYING, OR USE OF THIS DOCUMENT AND/OR THE DESIGN CONCEPT WITHOUT THE WRITTEN CONSENT OF FOREFRONT ARCHITECTURE & ENGINEERING LLC IS STRICTLY PROHIBITED AND PROTECTED BY UNITED STATES AND INTERNATIONAL LAW. IF PRINTED ON 11X17 SCALE IS HALF THE SIZE NOTED.