New Security Building
BRKR 009063
Birmingham IAP (ANG), AL

David Donovan

Digitally signed by David Donovan
DN: cn=David Donovan, o=SS&L, ou=SS&L, email=ddonovan@sslarch.com, c=US
Date: 2024.06.20 21:28:36 -05'00'

Schedule of Bid Options

Bid Option #1	Security Forces Parking Lot
Bid Option #2	Mechanical Screen Wall
Bid Option #3	Alternate Roof Configuration
Bid Option #4	Alternate Finish Schedule

Approvals:

Title:	Signature:	Date:
Base Commander:		
Base Civil Engineer:		
Base Project Engineer:		
Bio Enviornmental Eng:		
Safety:		
Security Police:		
Base Communications:		
Fire Chief:		
Using Agent:		

Design Team:

Architect:

SS&L

www.sslarch.com / Seay Seay & Litchfield, P.C. / 334.263.5162
architecture . interiors . planning . graphics

Consulting Engineers:

Civil:

PEC
PROFESSIONAL ENGINEERING CONSULTANTS, INC.
822 South McDonough Street
Montgomery, Alabama 36104
Phone: (334) 262-7307
Fax: (334) 262-7309

Structural

BLACKBURN DANIELS O'BARR
Blackburn Daniels O'Barr Inc.
8805 County Road 40 East, P.O. Box 100
Lowndesboro, Alabama 36752
P:334-285-0206 F:334 285-0207

Plumbing, Mechanical & Fire Protection:

WHORTON ENGINEERING, INC.
HVAC – PLUMBING – PROCESS CONTROL
RANDALL WHORTON, P.E.
PH 256/820-9897 FAX 256/820-9896
DATE
25 SUMMERALL GATE ROAD
ANNISTON, ALABAMA 36205

Electrical

McCARTER ENGINEERING
ELECTRICAL ENGINEERING CONSULTANTS
PHONE: (256) 240-7335
FAX: (256) 240-7336
878 AVALON LANE
ANNISTON, AL 36207
M.E. JOB #1301

SS&L
ARCHITECTURE & INTERIOR DESIGN
1133 South Court Street, Montgomery, AL 36104
Tel. 334.263.5162 | WWW.SSLARCH.COM

Rev.	Description	Date

Job Number: 12072
Date: JUNE 2024
Drawn By: JJ, NB, DCD, JBW, DOB
Checked By: DCD
Project Title

New Security Building
117th Air Refueling Wing
Birmingham, AL

Sheet Title: Title Sheet & Index to Drawings
Sheet Number: T1.0

STATE OF ALABAMA MONTGOMERY ALABAMA REGISTERED ARCHITECTS

GENERAL PROJECT NOTES:

GENERAL NOTES APPLY TO THE ENTIRE PROJECT. SPECIFIC NOTES APPLY TO ISOLATED WORK AREAS AND ARE FOR THE CONVENIENCE OF THE CONTRACTOR. HOWEVER, ALL ISOLATED WORK AREAS ARE NOT NOTED. SHOULD A CONDITION OCCUR THAT IS NOT SPECIFICALLY NOTED, THE CONTRACTOR SHALL PROCEED WITH WORK PER GENERAL DEMOLITION NOTES OR A SPECIFIC WORK NOTE(S) USED IN OTHER SIMILAR CONDITIONS, WHICHEVER IS MORE STRINGENT, PER APPROVAL OF ARCHITECT.

CONTRACTOR'S RESPONSIBILITY TO FIELD VERIFY CONDITIONS

1. CONTRACTOR TO VISIT SITE AND TO BECOME TOTALLY FAMILIAR WITH EXTENT OF WORK REQUIRED PRIOR TO BID.
2. CONTRACTOR TO VERIFY DIMENSIONS OF INTERIOR PARTITION WALLS. IF DISCREPANCY OCCURS, NOTIFY ARCHITECT PRIOR TO FRAMING.
3. CONTRACTOR TO VERIFY ALL FINISHED DIMENSIONS BEFORE INSTALLATION OF CABINET WORK, TRIMWORK, AND EQUIPMENT INSTALLATION.
4. DIMENSIONS OF EXISTING STRUCTURES ARE ONLY FOR THE CONVENIENCE OF THE CONTRACTOR, VERIFY ALL EXISTING CONDITIONS. LOCATION OF WALLS SHALL BE AS SHOWN ON PLAN RELATIVE TO EXISTING CONDITIONS.
5. CONTRACTOR TO VERIFY ALL DIMENSIONS AND FIELD CONDITIONS WITH THE DRAWINGS, IN PARTICULAR: WALL DIMENSIONS, INCOMING UTILITIES, ETC. REPORT IMMEDIATELY TO THE ARCHITECT ANY VARIANCES OR FIELD CONDITIONS THAT MAY CAUSE CONSTRUCTION PROBLEMS PRIOR TO COMMENCING WORK.

CONTRACTOR'S REPONSIBILITY TO COORDINATE THE WORK

1. CONTRACTOR TO VERIFY LOCATIONS OF ALL UTILITIES PRIOR TO COMMENCING. FURNISH INFORMATION NECESSARY TO ADJUST, MOVE OR RELOCATE EXISTING STRUCTURES, UTILITY POLES, LINES, SERVICES OF OTHER SYSTEMS LOCATED IN, OR AFFECTED BY CONSTRUCTION. COORDINATE WITH LOCAL AUTHORITIES HAVING JURISDICTION WITH CONSTRUCTION.
2. CONTRACTOR TO VERIFY APPLICABLE OPENINGS, DOOR SIZES, AND DIMENSIONS OF MECHANICAL ROOMS WITH EQUIPMENT. IF DISCREPANCY OCCURS, NOTIFY THE GOVERNMENT PRIOR TO FRAMING.
3. CONTRACTOR TO COORDINATE PLUMBING AND MECHANICAL LINES WITH CEILING HEIGHTS AND CRAWL SPACE, ABOVE CEILING AREAS AND STRUCTURAL ELEMENTS.
4. CONTRACTOR TO VERIFY WITH STRUCTURAL, PLUMBING, MECHANICAL, AND ELECTRICAL THE QUANTITY AND SIZES OF ALL SLEEVES REQUIRED. ALL SLEEVES TO BE ONE HOUR RATED, PROVIDE GREATER RATING IF PENETRATING INTO HIGHER RATED SPACE.
5. COORDINATE CONDUIT, PIPING, AND DUCTWORK SO THAT THE HEAD HEIGHT IS NOT ENCUMBERED AND SERVICES ARE AS TIGHT UP TO STRUCTURE AS POSSIBLE.
6. CONTRACTOR TO COORDINATE PLUMBING, MECHANICAL, FIRE SPRINKLER, ELECTRICAL, AND LIGHTING WITH STRUCTURAL ELEMENTS WHERE THERE IS EXPOSED STRUCTURE. CONDUIT LINES, ECT. SHALL RUN AT RIGHT ANGLES OR SEGMENTED BETWEEN COLUMN LINES AND BE CLEAN AND NEAT IN APPEARANCE.
7. COORDINATE LOCATION OF SWITCHES, OUTLETS, THERMOSTATS, LIGHTS, ETC. WITH SHELVING, TRIM, MARKER BOARDS, CABINETRY, AND TOILET ACCESSORIES. MOVE AS REQUIRED TO MISS SHELVING, STORAGE, CASEWORK, VISUAL DISPLAY BOARDS.
8. COORDINATE CONDUIT, PIPING, AND DUCTWORK SO THAT HEAD HEIGHT IS NOT ENCUMBERED AND SERVICES ARE AS TIGHT UP TO STRUCTURE AS POSSIBLE, THIS WILL INCLUDE JOGGING DUCTS, PLUMBING LINES, CONDUIT, ETC. UP AND DOWN OR AROUND AS REQUIRED TO ACHIEVE CEILING HEIGHTS AS INDICATED. COORDINATE INSTALLATION AND SEQUENCING OF DISCIPLINES TO ACHIEVE.
9. THE GENERAL CONTRACTOR SHALL STAKE OUT ALL MAJOR FEATURES SHOWN ON THE SITE PLAN TO VERIFY THE SITE LAYOUT RELATIVE TO THE PROPERTY LINES AND SITE CONDITIONS PRIOR TO ANY UTILITIES OR FOOTINGS BEING INSTALLED.
10. COORDINATE FINAL CEILING HEIGHT WITH ALL WINDOWS. ALL TRADES SHOULD BE ABLE TO FIT WITHIN THE ALLOTTED SPACE IF COORDINATED BY THE GENERAL CONTRACTOR AND EACH TRADE. IF FURR DOWNS ARE REQUIRED TO ACCOMMODATE ABOVE CEILING ITEMS, THE CONTRACTOR IS RESPONSIBLE TO PROVIDE FURR DOWNS AND COORDINATE LOCATIONS WITH THE GOVERNMENT.
11. PLUMBING, FIRE-PROTECTION, MECHANICAL, AND ELECTRICAL WORK REQUIRED BY THIS CONTRACT IS NOTED ON CONTRACT DOCUMENTS. THE TRADE CONTRACTORS SHALL BE RESPONSIBLE FOR COORDINATION OF THEIR WORK WITH ALL TRADES. CHANGE ORDERS SHALL NOT BE APPROVED FOR EXTRA WORK ARISING FROM TRADE CONTRACTORS NOT COORDINATING WORK.
12. CONTRACTOR WILL BE RESPONSIBLE FOR ALL LAYOUT FOR INTERIOR/EXTERIOR WALLS AND FOUNDATION AND WILL BE RESPONSIBLE FOR MAINTAINING A BENCHMARK AND CONTROL LINES AT EACH FLOOR LEVEL. CONTRACTOR IS ALSO RESPONSIBLE FOR VERIFYING ACTUAL FLOOR HEIGHTS AND COORDINATING NEW AND EXISTING FLOORS TO ALIGN.
13. EACH TRADE CONTRACTOR WILL BE RESPONSIBLE FOR FURNISHING AND INSTALLING CEILING OR WALL-MOUNTED ACCESS DOORS AS REQUIRED TO ACCESS COMPONENTS OF ITS SYSTEM AND TO COORDINATE WITH OTHER TRADES SO ACCESS IS MAINTAINED. PROVIDE FIRE RATING ON ACCESS DOORS AS REQUIRED.
14. PLUMBING, FIRE-PROTECTION, MECHANICAL, AND ELECTRICAL WORK REQUIRED BY THIS CONTRACT IS NOTED ON CONTRACT DOCUMENTS. THE TRADE CONTRACTORS SHALL BE RESPONSIBLE FOR COORDINATION OF THEIR WORK WITH ALL TRADES. CHANGE ORDERS SHALL NOT BE APPROVED FOR EXTRA WORK ARISING FROM TRADE CONTRACTORS NOT COORDINATING WORK.
15. CONTRACTOR SHALL COORDINATE TO ASSURE ALL EQUIPMENT CAN BE BROUGHT INTO THE BUILDING AND PROPERLY INSTALLED. THIS INCLUDES MANUFACTURE COMPONENT SIZE/ASSEMBLY, CRITICAL PATH SCHEDULING, AND COORDINATION OF OTHER TRADES. CONTRACTOR SHALL BE RESPONSIBLE FOR ALL NECESSARY DEMOLITON AND ASSOCIATED RPARATION TO ACCOMPLISH ALL EQUIPMENT INSTALLATION.

CONTRACTOR'S RESPONSIBILTY TO COMPLY WITH APPLICABLE GOVERNING CODES/AUTHORITIES:

1. ALL WORK SHALL BE IN ACCORDANCE WITH ALL APPLICABLE CODES, LAWS, AND ORDINANCES. EACH TRADE CONTRACTOR IS RESPONSIBLE FOR OBTAINING ALL PERMITS, INSPECTIONS, AND CERTIFICATES REQUIRED BY GOVERNING ENTITIES.
2. CONTRACTOR TO CONFIRM ALL OSHA AND APPLICABLE STANDARDS TO ASSURE SAFETY OF ALL PERSONS ON SITE DURING ENTIRE COURSE OF CONSTRUCTION.
3. NEITHER THE ARCHITECT, NOR THE GOVERNMENT SHALL BE RESPONSIBLE FOR JOB SAFETY. EACH TRADE CONTRACTOR SHALL BE RESPONSIBLE FOR JOB SITE SAFETY AND SAFETY OF THE PUBLIC DURING CONSTRUCTION AND SHALL PROVIDE APPROPRIATE WARNINGS, BARRICADES, ETC. AS REQUIRED PER CODES.
4. PROMPTLY NOTIFY THE GOVERNMENT IN WRITING IF ANY CONTRACT DOCUMENTS ARE FOUND TO BE IN VARIANCE WITH THE APPLICABLE LAWS AND ORDINANCES. NECESSARY CHANGES WILL BE MADE BY APPROPRIATE MODIFICATIONS.
5. IF ANY WORK IS PERFORMED KNOWING IT TO BE CONTRARY TO SUCH CODES, LAWS, ORDINANCES, RULES AND REGULATIONS, AND WITHOUT NOTICE TO THE CONTRACTING OFFICER, THAT TRADE CONTRACTOR ASSUMES FULL RESPONSIBILITY AND BEARS COSTS ATTRIBUTED TO BRING WORK TO COMPLIANCE OF SUCH CODES, LAWS, ORDINANCES, AND RULES AND REGULATIONS.

GENERAL PROJECT NOTES (CONTINUED):

GENERAL PROVISIONS FOR FIRE RATED CONSTRUCTION

1. ALL RECESSED ACCESSORIES LOCATED IN FIRE RATED WALLS SHALL BE EITHER OF FIRE RATED CONSTRUCTION OR COORDINATED WITH THE ADJACENT TRADES TO ALLOW THE GYPSUM BOARD TO BE CONTINUOUS BEHIND THE ACCESSORIES.
2. EACH RESPONSIBLE CONTRACTOR SHALL SEAL ALL PENETRATIONS MADE AS PART OF THEIR WORK IN FIRE-RATED CONSTRUCTION AS REQUIRED BY ALL APPLICABLE CODES. EACH CONTRACTOR TO VERIFY WITH LOCAL FIRE MARSHAL OR BUILDING OFFICIAL HAVING JURISDICTION. EACH RESPONSIBLE CONTRACTOR WILL SEAL ALL PENETRATIONS MADE AS PART OF THEIR WORK THROUGH NON-RATED PARTITIONS. ALL FIRE CAULK TO BE THE SAME BRAND AS DETERMINED BY CONTRACTOR.
3. ALL NEW AND EXISTING FIRE WALLS IN WORK AREAS ARE TO BE CARRIED TO THE UNDERSIDE OF THE ROOF DECK AND SEALED AS REQUIRED FOR NECESSARY FIRE RATINGS, AND LABELED PER THE AUTHORITY HAVING JURISDICTION.
4. MATERIALS WITHIN PLENUMS. EXCEPT AS REQUIRED BY THE 2009 INTERNATIONAL MECHANICAL CODE SECTION 602.2.1.1 THROUGH 602.2.1.6, MATERIALS WITHIN PLENUMS SHALL BE NONCOMBUSTIBLE OR SHALL HAVE A FLAME SPEAD INDEX OF NOT MORE THAN 25 AND A SMOKE-DEVELOPED INDEX OF NOT MORE THAN 50 WHEN TESTED IN ACCORDANCE WITH ASTM E84 OR UL 723.

MISCELLANEOUS GENERAL PROVISIONS:

1. CONTRACTOR TO NOTIFY THE GOVERNMENT IMMEDIATELY IF THERE ARE ANY DISCREPANCIES WITH TAGGED DETAILS, ENLARGED PLANS, ELEVATIONS, ETC.
2. IN ROOMS WITH FLOOR DRAINS, WHERE CONCRETE SLOPE TO DRAIN AT 1 PERCENT SLOPE UNLESS SPECIFICALLY NOTED OTHERWISE.

TYPICAL ABBREVIATION LEGEND:

ACT	Acoustical Ceiling Tile	JT	Joint
A/C	Air Conditioning	LAM	Laminate
AB	Anchor Bolt	LAV	Lavatory
ADA	American Disabilities Act	LVR	Louver
AFF	Above Finish Floor	MIN	Minimum
BM	Beam	MAX	Maximum
BRG	Bearing	MECH	Mechanical
BRK	Brick	MET	Metal
CFCI	Contractor Furnished Contractor Installed	MFR	Manufacturer
		MH	Man Hole
CIP	Cast In Place	MIN	Minimum
CJ	Control Joint	MISC	Miscellaneous
CL	Column Line	MLDG	Moulding
CLG	Ceiling	MO	Masonry Opening
CLR	Clear	MTD	Mounted
CMU	Concrete Masonry Unit	MW	Microwave
COL	Column	NIC	Not In Contract
CONC	Concrete	NO	Number
CONT	Continuous	NOM	Nominal
CONTR	Contractor	NTS	Not to Scale
COORDF	Coordination	OC	On Center
CORR	Corridor	OFCI	Owner Furnished Contractor Installed
CT	Ceramic Tile		
CTR	Center	OFOI	Owner Furnished Owner Installed
DBL	Double		
DET	Detail	OPP	Opposite
DIA	Diameter	P	Paint
DR	Drain	PL	Plate / Property Line
DN	Down	PL LAM	Plastic Laminate
DS	Downspout	PLYWD	Plywood
DW	Dishwasher	PNL	Panel
DWG	Drawing	PT	Pressure Treated
DWR	Drawer	R	Radius / Riser
EA	Each	RB	Rubber Base
EF	Exhaust Fan	REFR	Refrigerator
EJ	Expansion Joint	REINF	Reinforce (D)
EL	Elevation	REV	Revised
ELEC	Electrical	RM	Room
EQ	Equal	SCHED	Schedule
EX	Existing	SECT	Section
EXT	Exterior	SHT	Sheet
FF	Finish Floor	SHW	Single Hung Window
FIN	Finish	SIM	Similar
FL	Floor Line	SPECS	Specifications
FlSNG	Flashing	SQ	Square
FTG	Footing	SS	Sanitary Sewer
GA	Gauge	STD	Standard
GFRC	Glass Fiber Reinforced Concrete	SVT	Solid Vinyl Tile
		STL	Steel
GWB	GWB	T	Tile
HT	Height	T&G	Tongue & Groove
HM	Hollow Metal	TYP	Typical
HOR	Horizontal	UNO	Unless Noted Otherwise
HR	Handrail		
HTR	Heater	VERT	Vertical
HVAC	Heating, Ventilation & Air Conditioning	VTR	Vent Thru Roof
		VWC	Vinyl Wall Covering
HxWxL	Height, width, length	WD	Wood
IN	Inches	WWM	Welded Wire Mesh
INSUL	Insulation	WWF	Welded Wire Fabric
INT	Interior	YP	Yellow Pine
JST	Joist		

GENERAL SYMBOL LEGEND

SYMBOLS APPLY TO ALL ARCHITECTURAL SHEETS

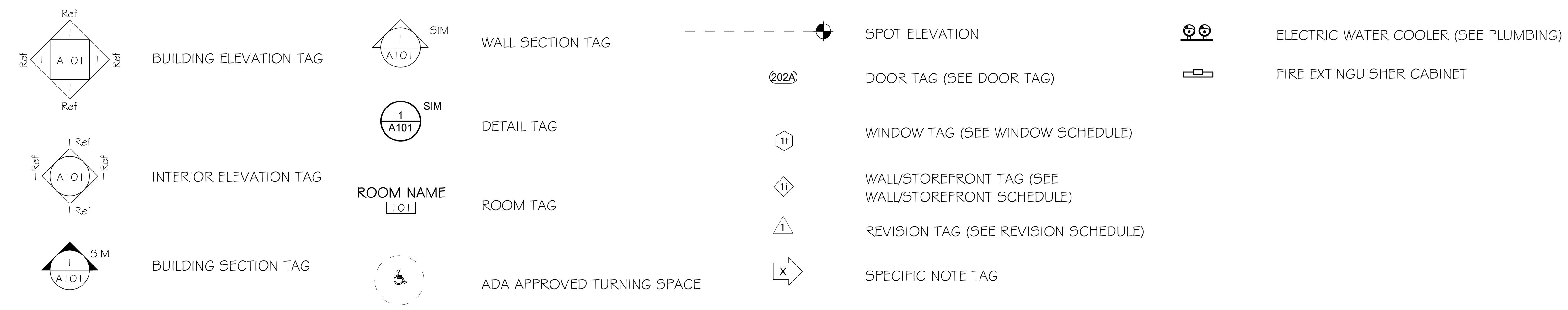

Sheet Schedule

Sheet No.	Sheet Name
00 Title	
T1.0	Title Sheet & Index to Drawings
T2.0	General Work Notes, Abbreviations, Symbols, & Index To Drawings
T3.0	Typical Mounting Heights & Clearances
01 Civil	
C1.1	Topographic Survey
C2.1	Site Demolition Plan
C3.1	Site Layout Plan
C4.1	Site Grading and Drainage Plan
C5.1	Site Utilities Plan
C6.1	Site Erosion Control and B.M.P. Plan
C7.1	Pavement Joint Layout
C8.1	Site Details
C9.1	Site Details
C10.1	Site Details
C11.1	Site Details
02 Landscape	
L1.0	Landscape Site Plan
L1.1	Landscape Details
02.1 Life Safety	
LS1.0	Life Safety Plan, Criteria, and Calculations
03 Architectural	
A2.1	First Floor Plan
A2.2	Dimensioned Floor Plan
A2.3	Roof Plan (Base Bid)
A2.3A	Roof Plan (Bid Option)
A2.4	Wall Type Plan
A3.1	Finish Schedule
A3.2	Door Schedule & Details
A3.3	Opening Schedule
A3.4	Curtain Wall & Storefront Details
A4.1	Elevations (Base Bid)
A4.1A	Elevations (Bid Option)
A5.1	Building Sections
A5.2	Wall Sections
A5.3	Wall Sections
A5.4	Vapor Barrier Details
A6.1	Enlarged Floor Plans & Interior Elevations (Base Bid)
A6.2	Enlarged Floor Plans & Interior Elevations (Bid Option)
A6.3	Enlarged Floor Plans & Interior Elevations
A7.1	Cabinet Elevations
A8.1	Reflected Ceiling Plan
A9.1	Floor Pattern Plan

Sheet Schedule

Sheet No.	Sheet Name
04 Structural	
S0.1	General Notes / Schedules / Typical Details
S1.1	First Floor and Foundation Plan - (Base Bid)
S1.1A	First Floor and Foundation Plan - (Bid Option)
S1.2	Mezzanine Framing Plan
S1.3	Roof Framing Plan - (Base Bid)
S1.3A	Roof Framing Plan - (Bid Option)
S2.1	Sections and Details
S2.2	Sections and Details
S2.3	Sections and Details
05 Mechanical	
M1.1	HVAC Legend, Notes, and Schedules
M1.2	HVAC Schedules
M1.3	HVAC Schedules and Details
M2.1	HVAC Details
M2.2	HVAC Details
M2.3	HVAC Details
M2.4	HVAC Details
M2.5	HVAC Details
M2.6	HVAC Details and Compliance Calculations
M3.1	HVAC Plans
M4.1	HVAC Chilled Water Piping Plans
M5.1	HVAC Hot Water Piping Plans
M6.1	HVAC Chilled Water Piping Riser Diagram
M6.2	HVAC Hot Water Piping Riser Diagram
06 Plumbing	
P1.1	Plumbing Schedules, Legend, and Notes
P1.2	Plumbing Details
P2.1	First Floor Waste & Condensate Plumbing Plan
P3.1	First Floor Water & Gas Plumbing Plan
P4.1	Mechanical Platform Plumbing Plan
P5.1	Waste & Gas Plumbing Riser Diagrams
P5.2	Water Plumbing Riser Diagram
07 Fire Protection	
SP1.1	Fire Sprinkler Plumbing Legend, Notes and Details
SP2.1	Fire Sprinkler Plumbing Plans
08 Electrical	
E1.1	Symbols, Notes and Lighting Fixture Schedule
E2.1	Electrical Demolition Site Plan
E2.2	Site Plan, Single Line Diagram and Details
E2.3	Panelboard Schedules
E2.4	Panelboard Schedules Continued
E3.1	First Floor Lighting Plan and Mezzanine Lighting Plan
E4.1	Base Bid First Floor Power Plan and Mezzanine Power and Auxiliaries Plan
E5.1	Base Bid First Floor Auxiliaries Plan
E6.1	Electrical Details

SS&L
ARCHITECTURE & INTERIOR DESIGN
1115 South Court Street | Montgomery, AL 36104
Tel. 334. 263. 5162 | WWW.SSLARCH.COM

Rev.	Description	Date

Job Number 12072

Date JUNE 2024

Drawn By JJ, NB, DCD, JBW, DOB

Checked By DCD

Project Title

New Security Building
117th Air Refueling Wing
Birmingham, AL

Sheet Title
General Work Notes, Abbreviations, Symbols, & Index To Drawings

Sheet Number
T2.0

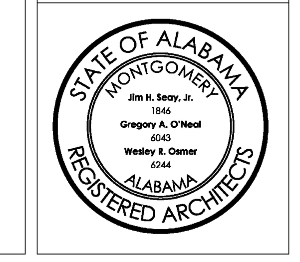

TYPICAL ADA MOUNTING HEIGHTS (UNLESS OTHERWISE NOTED)

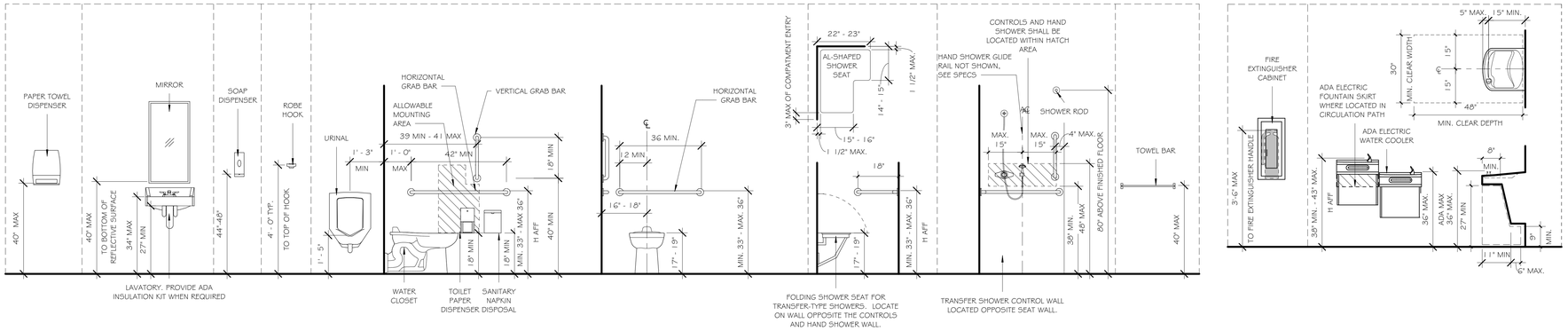

1 / T3.0 TYPICAL ADA MOUNTING HEIGHTS
1/2" = 1'-0"

GENERAL NOTES:

1. ADA STANDARDS FOR ACCESSIBLE DESIGN AND ICC/ANSI A117.1 ARE THE REFERENCE STANDARDS USED FOR SCOOPING PROVISIONS FOR ACCESSIBILITY. THE MORE STRINGENT PROVISIONS OF THE TWO STANDARDS ARE INDICATED.
2. DIAGRAMS SHOWN ARE FOR MOUNTING HEIGHT INFORMATION ONLY. FIXTURES SHOWN ARE NOT NECESSARILY INCLUDED IN THE PROJECT.
3. COORDINATE ADA REQUIREMENTS WITH ALL REQUIRED CONCEALED WOOD BLOCKING.
4. REFER TO MANUFACTURER'S LITERATURE REGARDING RECOMMENDATIONS FOR MOUNTING PRODUCTS AND MATERIALS IN COMPLIANCE WITH ADA STANDARDS.

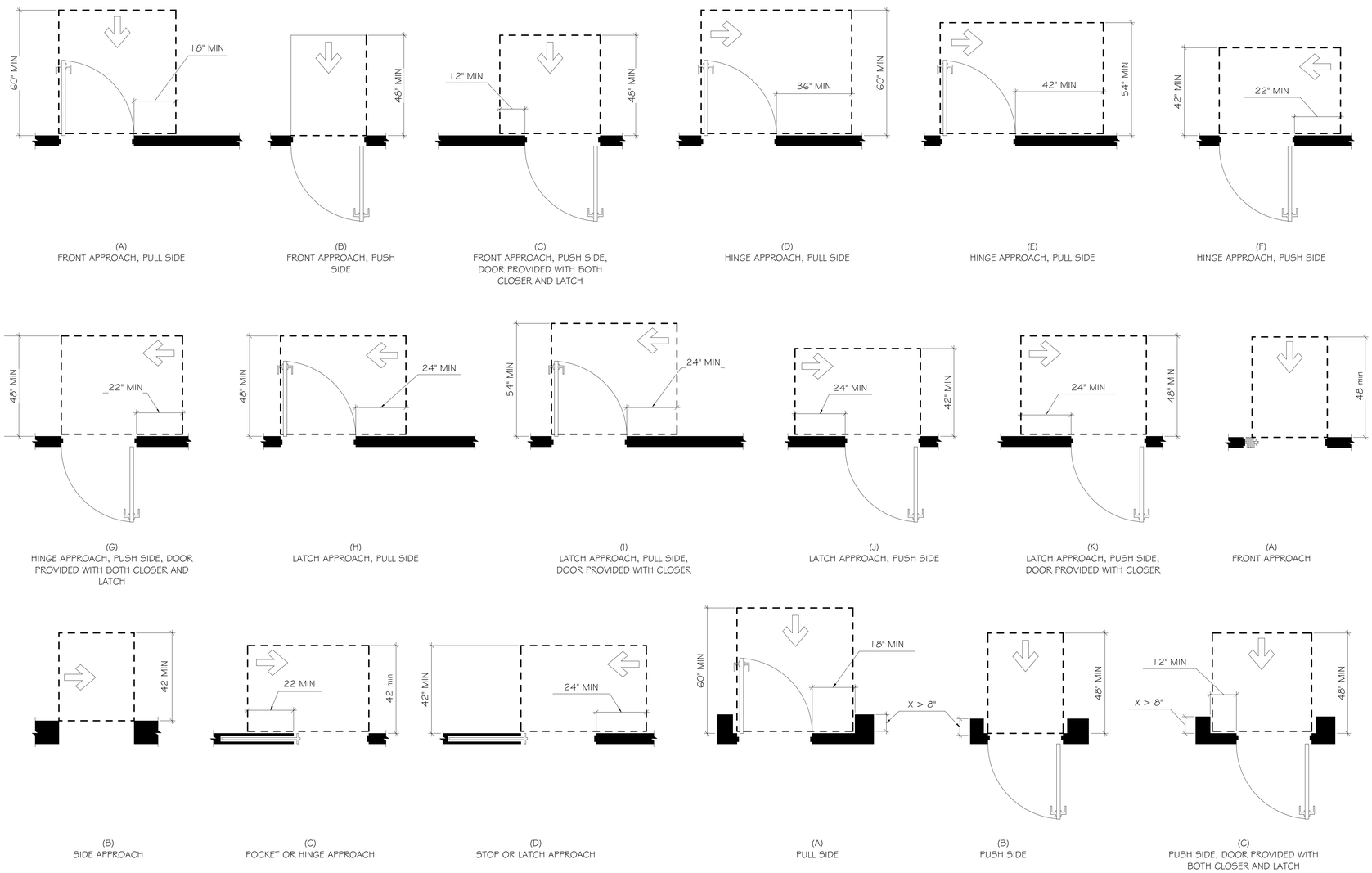

(A) FRONT APPROACH, PULL SIDE
(B) FRONT APPROACH, PUSH SIDE
(C) FRONT APPROACH, PUSH SIDE, DOOR PROVIDED WITH BOTH CLOSER AND LATCH
(D) HINGE APPROACH, PULL SIDE
(E) HINGE APPROACH, PULL SIDE
(F) HINGE APPROACH, PUSH SIDE
(G) HINGE APPROACH, PUSH SIDE, DOOR PROVIDED WITH BOTH CLOSER AND LATCH
(H) LATCH APPROACH, PULL SIDE
(I) LATCH APPROACH, PULL SIDE, DOOR PROVIDED WITH CLOSER
(J) LATCH APPROACH, PUSH SIDE
(K) LATCH APPROACH, PUSH SIDE, DOOR PROVIDED WITH CLOSER
(A) FRONT APPROACH
(B) SIDE APPROACH
(C) POCKET OR HINGE APPROACH
(D) STOP OR LATCH APPROACH
(A) PULL SIDE
(B) PUSH SIDE
(C) PUSH SIDE, DOOR PROVIDED WITH BOTH CLOSER AND LATCH

2 / T3.0 ADA DOOR OPENING MANEUVERING CLEARANCES
1/2" = 1'-0"

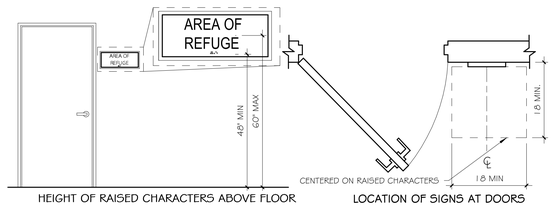

3 / T3.0 TYPICAL SIGNAGE MOUNTING DETAILS
1/8" = 1'-0"

S|S&L
ARCHITECTURE & INTERIOR DESIGN
1115 South Colonnade Birmingham, AL 35204
Tel. 334.263.5102 | WWW.SSLARCH.COM

Rev.	Description	Date

Job Number
12072

Date
JUNE 2024

Drawn By
JJ, NB, DCD, JBW, DOB

Checked By
DCD

Project Title

New Security Building
117th Air Refueling Wing
Birmingham, AL

Sheet Title
Typical Mounting Heights & Clearances

Sheet Number
T3.0

STATE OF ALABAMA
MONTGOMERY
Jim H. Sorg, Jr. 1866
Gregory A. O'Neal 6043
Wesley S. Clarke 6044
ALABAMA
REGISTERED ARCHITECTS

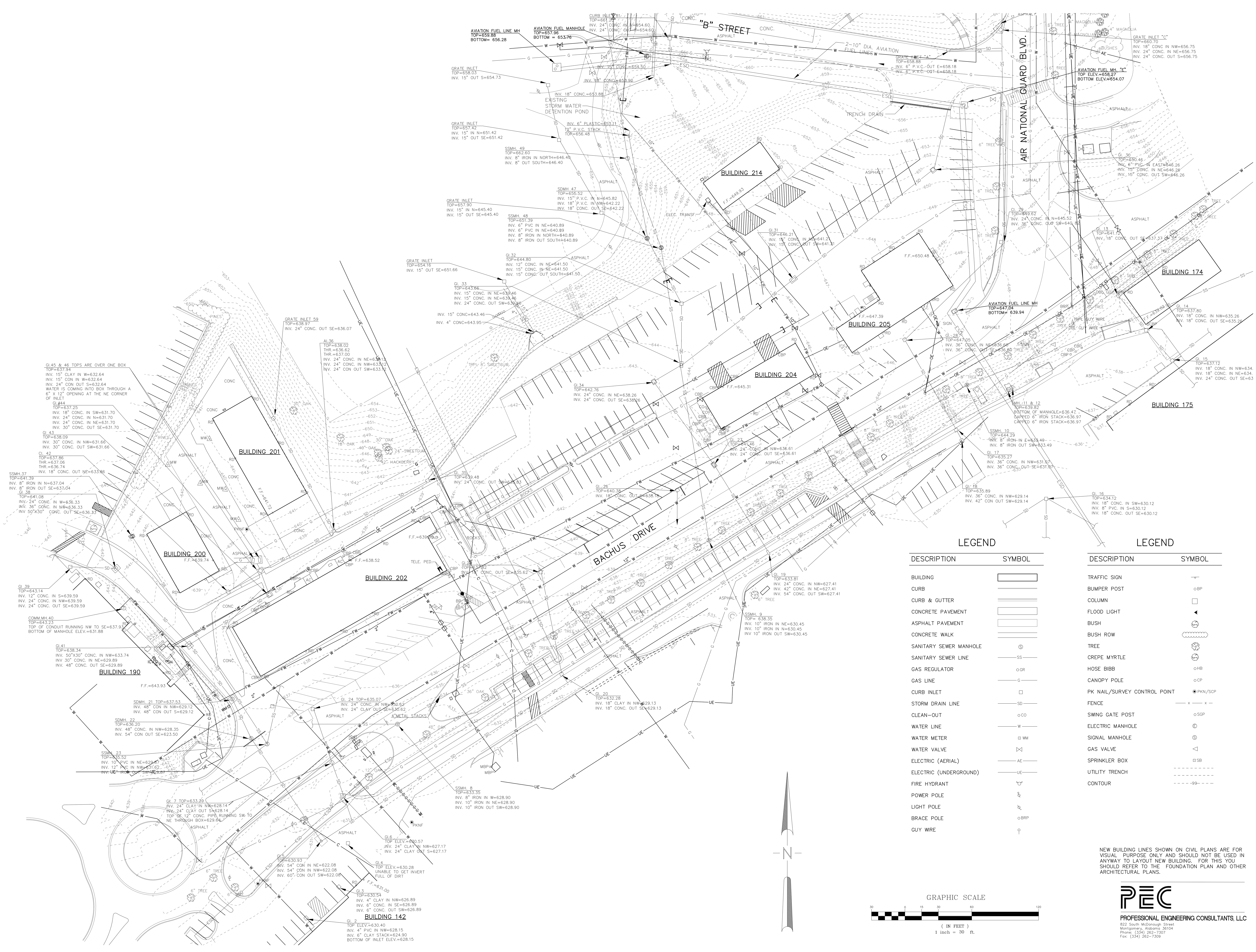

LEGEND

DESCRIPTION	SYMBOL
BUILDING	
CURB	
CURB & GUTTER	
CONCRETE PAVEMENT	
ASPHALT PAVEMENT	
CONCRETE WALK	
SANITARY SEWER MANHOLE	
SANITARY SEWER LINE	SS
GAS REGULATOR	GR
GAS LINE	G
CURB INLET	
STORM DRAIN LINE	SD
CLEAN-OUT	CO
WATER LINE	W
WATER METER	WM
WATER VALVE	
ELECTRIC (AERIAL)	AE
ELECTRIC (UNDERGROUND)	UE
FIRE HYDRANT	
POWER POLE	
LIGHT POLE	
BRACE POLE	BRP
GUY WIRE	

LEGEND

DESCRIPTION	SYMBOL
TRAFFIC SIGN	
BUMPER POST	BP
COLUMN	
FLOOD LIGHT	
BUSH	
BUSH ROW	
TREE	
CREPE MYRTLE	
HOSE BIBB	HB
CANOPY POLE	CP
PK NAIL/SURVEY CONTROL POINT	PKN/SCP
FENCE	x
SWING GATE POST	SGP
ELECTRIC MANHOLE	
SIGNAL MANHOLE	
GAS VALVE	
SPRINKLER BOX	SB
UTILITY TRENCH	
CONTOUR	99

NEW BUILDING LINES SHOWN ON CIVIL PLANS ARE FOR VISUAL PURPOSE ONLY AND SHOULD NOT BE USED IN ANYWAY TO LAYOUT NEW BUILDING. FOR THIS YOU SHOULD REFER TO THE FOUNDATION PLAN AND OTHER ARCHITECTURAL PLANS.

GRAPHIC SCALE

0 15 30 60 120

(IN FEET)
1 inch = 30 ft.

PEC
PROFESSIONAL ENGINEERING CONSULTANTS, LLC
822 South McDonough Street
Montgomery, Alabama 36104
Phone: (334) 262-7307
Fax: (334) 262-7309

SS&L
ARCHITECTURE & INTERIOR DESIGN
1115 South Court Street | Montgomery, AL 36104
Tel. 334.263.5162 | WWW.SSLARCH.COM

Rev.	Description	Date

Job Number 12072
Date JUNE 2024
Drawn By SBG
Checked By SBG

Project Title
New Security Building
117th Air Refueling Wing
Birmingham, AL

Sheet Title
Topographic Survey

Sheet Number
C1.1

ALABAMA LICENSED No. 5935 PROFESSIONAL ENGINEER
6/14/24

NOTE TO CONTRACTOR

CONTRACTOR SHALL FIELD DETERMINE LOCATION AND ELEVATION OF EXISTING AVIATION FUEL LINES PRIOR TO PERFORMING ANY WORK IN THE AREA OF THE LINES. THESE LINES SHALL NOT BE DISTURBED UNDER ANY CONDITIONS.

NOTES
1. REMOVE ALL UTILITIES SERVING BUILDINGS TO BE REMOVED TO A POINT AT MAIN LINES OR AS SHOWN ON DRAWINGS.
2. SEE ELECTRICAL DRAWINGS FOR REMOVAL OF ELECTRICAL AND COMMUNICATION LINES.

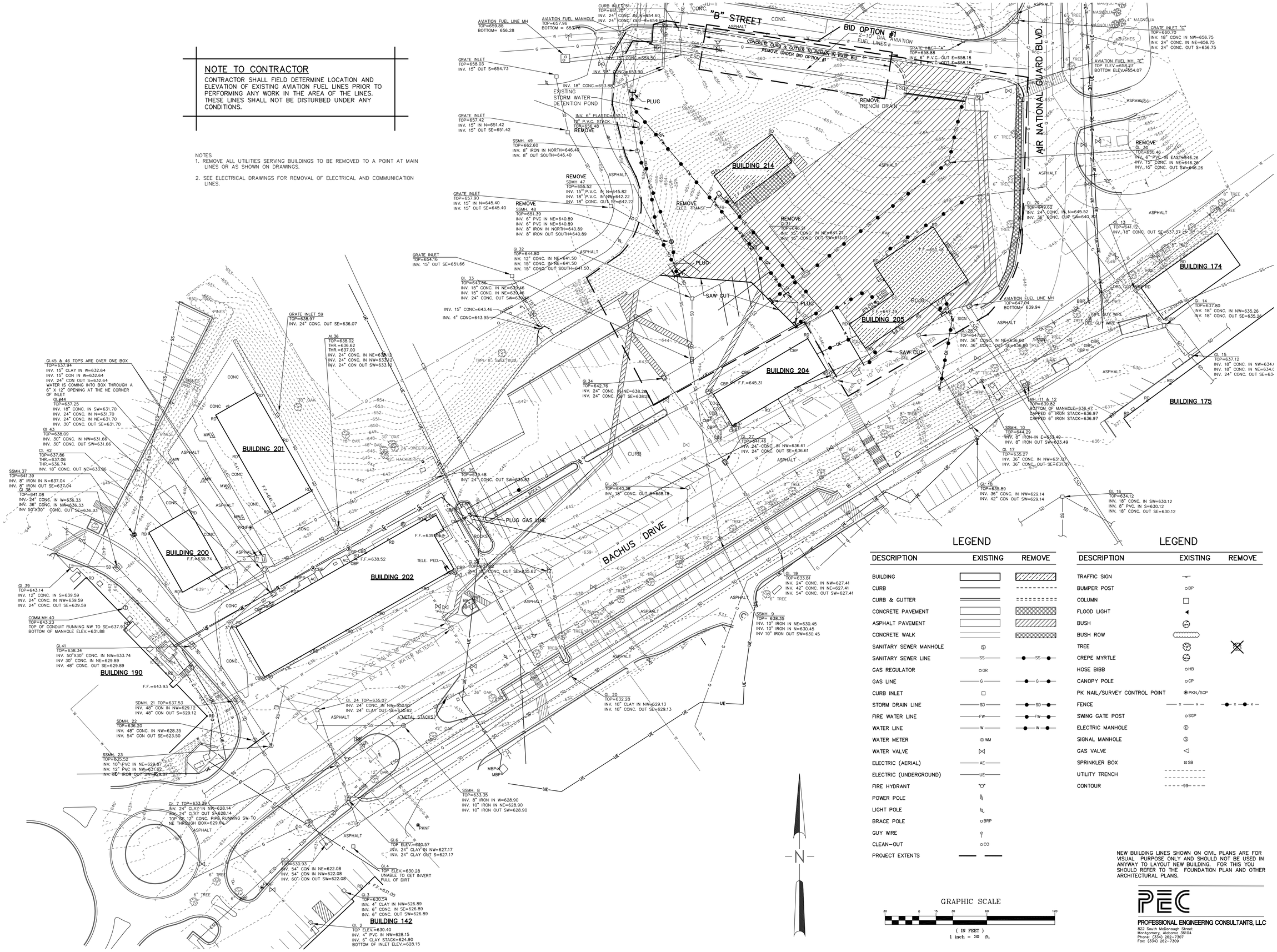

LEGEND

DESCRIPTION	EXISTING	REMOVE
BUILDING		
CURB		
CURB & GUTTER		
CONCRETE PAVEMENT		
ASPHALT PAVEMENT		
CONCRETE WALK		
SANITARY SEWER MANHOLE	Ⓢ	
SANITARY SEWER LINE	—SS—	—●—SS—●—
GAS REGULATOR	○GR	
GAS LINE	—G—	—●—G—●—
CURB INLET	□	
STORM DRAIN LINE	—SD—	—●—SD—●—
FIRE WATER LINE	—FW—	—●—FW—●—
WATER LINE	—W—	—●—W—●—
WATER METER	⊡WM	
WATER VALVE	⋈	
ELECTRIC (AERIAL)	—AE—	
ELECTRIC (UNDERGROUND)	—UE—	
FIRE HYDRANT		
POWER POLE		
LIGHT POLE		
BRACE POLE	○BRP	
GUY WIRE		
CLEAN-OUT	○CO	
PROJECT EXTENTS	— —	

LEGEND

DESCRIPTION	EXISTING	REMOVE
TRAFFIC SIGN		
BUMPER POST	○BP	
COLUMN	□	
FLOOD LIGHT	◄	
BUSH		
BUSH ROW		
TREE		
CREPE MYRTLE		
HOSE BIBB	○HB	
CANOPY POLE	○CP	
PK NAIL/SURVEY CONTROL POINT	⊛PKN/SCP	
FENCE	—x—x—	—●—x—●—
SWING GATE POST	○SGP	
ELECTRIC MANHOLE	Ⓔ	
SIGNAL MANHOLE	Ⓢ	
GAS VALVE	◁	
SPRINKLER BOX	⊡SB	
UTILITY TRENCH		
CONTOUR	---99---	

NEW BUILDING LINES SHOWN ON CIVIL PLANS ARE FOR VISUAL PURPOSE ONLY AND SHOULD NOT BE USED IN ANYWAY TO LAYOUT NEW BUILDING. FOR THIS YOU SHOULD REFER TO THE FOUNDATION PLAN AND OTHER ARCHITECTURAL PLANS.

GRAPHIC SCALE

30 0 15 30 60 120

(IN FEET)
1 inch = 30 ft.

PEC
PROFESSIONAL ENGINEERING CONSULTANTS, LLC
822 South McDonough Street
Montgomery, Alabama 36104
Phone: (334) 262-7307
Fax: (334) 262-7309

SS&L
ARCHITECTURE & INTERIOR DESIGN
1115 South Court Street | Montgomery, AL 36104
Tel. 334. 263. 5162 | WWW.SSLARCH.COM

Rev.	Description	Date

Job Number 12072

Date JUNE 2024

Drawn By SBG

Checked By SBG

Project Title

New Security Building
117th Air Refueling Wing
Birmingham, AL

Sheet Title
Site Demolition Plan

Sheet Number
C2.1

ALABAMA LICENSED No. 5935 PROFESSIONAL ENGINEER PATRICK A. MOSELEY
6/14/24

NOTE TO CONTRACTOR

CONTRACTOR SHALL FIELD DETERMINE LOCATION AND ELEVATION OF EXISTING AVIATION FUEL LINES PRIOR TO PERFORMING ANY WORK IN THE AREA OF THE LINES. THESE LINES SHALL NOT BE DISTURBED UNDER ANY CONDITIONS.

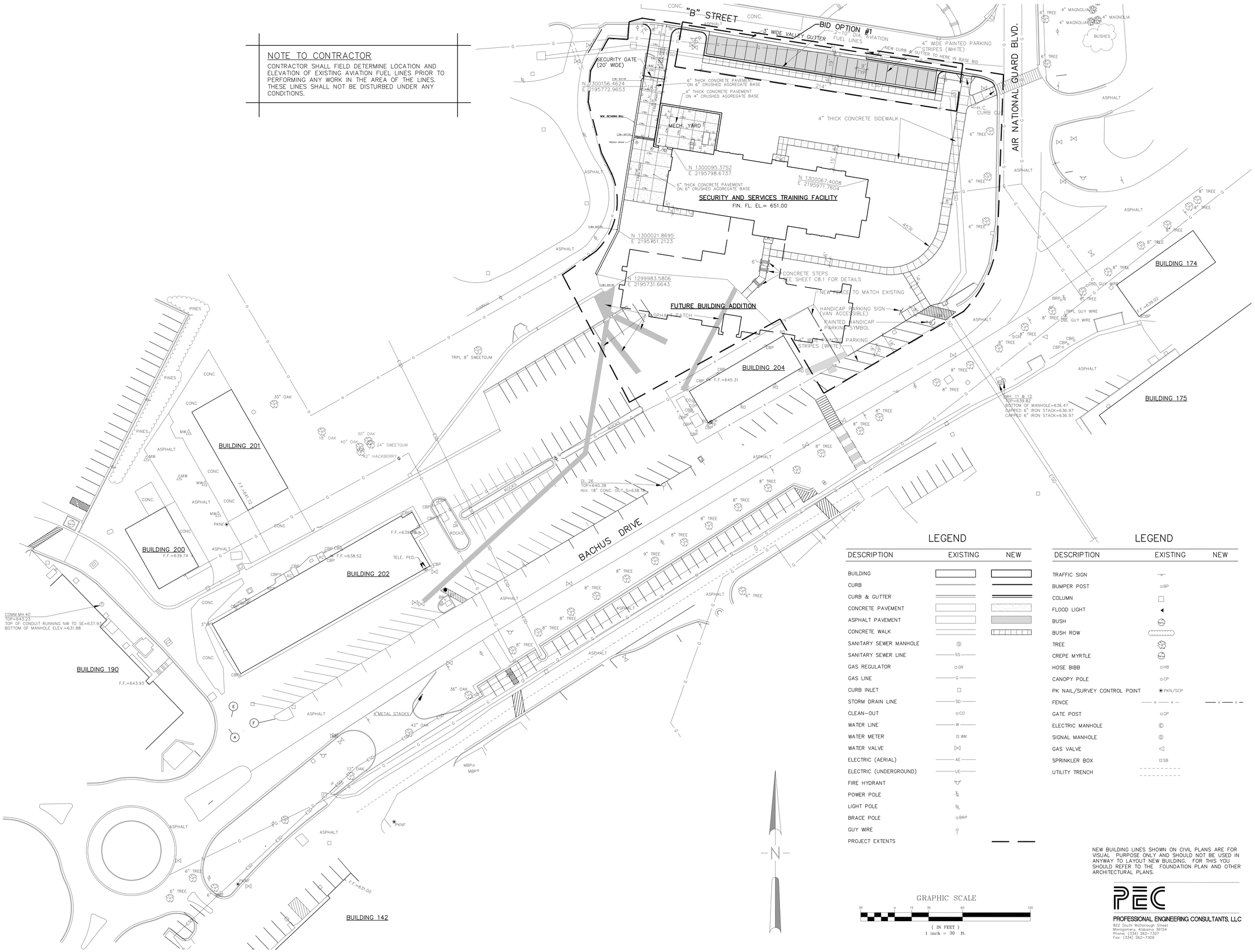

LEGEND

DESCRIPTION	EXISTING	NEW
BUILDING		
CURB		
CURB & GUTTER		
CONCRETE PAVEMENT		
ASPHALT PAVEMENT		
CONCRETE WALK		
SANITARY SEWER MANHOLE	Ⓢ	
SANITARY SEWER LINE	SS	
GAS REGULATOR	GR	
GAS LINE	G	
CURB INLET		
STORM DRAIN LINE	SD	
CLEAN-OUT	CO	
WATER LINE	W	
WATER METER	WM	
WATER VALVE		
ELECTRIC (AERIAL)	AE	
ELECTRIC (UNDERGROUND)	UE	
FIRE HYDRANT		
POWER POLE		
LIGHT POLE		
BRACE POLE	BRP	
GUY WIRE		
PROJECT EXTENTS		

LEGEND

DESCRIPTION	EXISTING	NEW
TRAFFIC SIGN		
BUMPER POST	BP	
COLUMN		
FLOOD LIGHT		
BUSH		
BUSH ROW		
TREE		
CREPE MYRTLE		
HOSE BIBB	HB	
CANOPY POLE	CP	
PK NAIL/SURVEY CONTROL POINT	PKN/SCP	
FENCE	x x x	x x x
GATE POST	GP	
ELECTRIC MANHOLE	Ⓔ	
SIGNAL MANHOLE	Ⓢ	
GAS VALVE		
SPRINKLER BOX	SB	
UTILITY TRENCH		

NEW BUILDING LINES SHOWN ON CIVIL PLANS ARE FOR VISUAL PURPOSE ONLY AND SHOULD NOT BE USED IN ANYWAY TO LAYOUT NEW BUILDING. FOR THIS YOU SHOULD REFER TO THE FOUNDATION PLAN AND OTHER ARCHITECTURAL PLANS.

GRAPHIC SCALE

30 0 15 30 60 120

(IN FEET)
1 inch = 30 ft.

PEC
PROFESSIONAL ENGINEERING CONSULTANTS, LLC
822 South McDonough Street
Montgomery, Alabama 36104
Phone: (334) 262-7307
Fax: (334) 262-7309

SS&L
ARCHITECTURE & INTERIOR DESIGN
1115 South Court Street | Montgomery, AL 36104
Tel. 334. 265.5162 | WWW.SSLARCH.COM

Rev.	Description	Date

Job Number: 12072

Date: JUNE 2024

Drawn By: SBG

Checked By: SBG

Project Title

New Security Building
117th Air Refueling Wing
Birmingham, AL

Sheet Title: Site Layout Plan

Sheet Number: C3.1

ALABAMA LICENSED No. 5935 PROFESSIONAL ENGINEER PATRICK A. MOSLEY

6/14/24

NOTE TO CONTRACTOR

CONTRACTOR SHALL FIELD DETERMINE LOCATION AND ELEVATION OF EXISTING AVIATION FUEL LINES PRIOR TO PERFORMING ANY WORK IN THE AREA OF THE LINES. THESE LINES SHALL NOT BE DISTURBED UNDER ANY CONDITIONS.

NOTES:
1. TOP OF EXISTING INLET 51 SHALL BE REMOVED AND CONVERTED TO MANHOLE WITH SOLID MANHOLE COVER. NEW TOP ELEVATION = 660.70.
2. ALL SLOPES 10:1 AND STEEPER SHALL BE HYDOSEEDED.

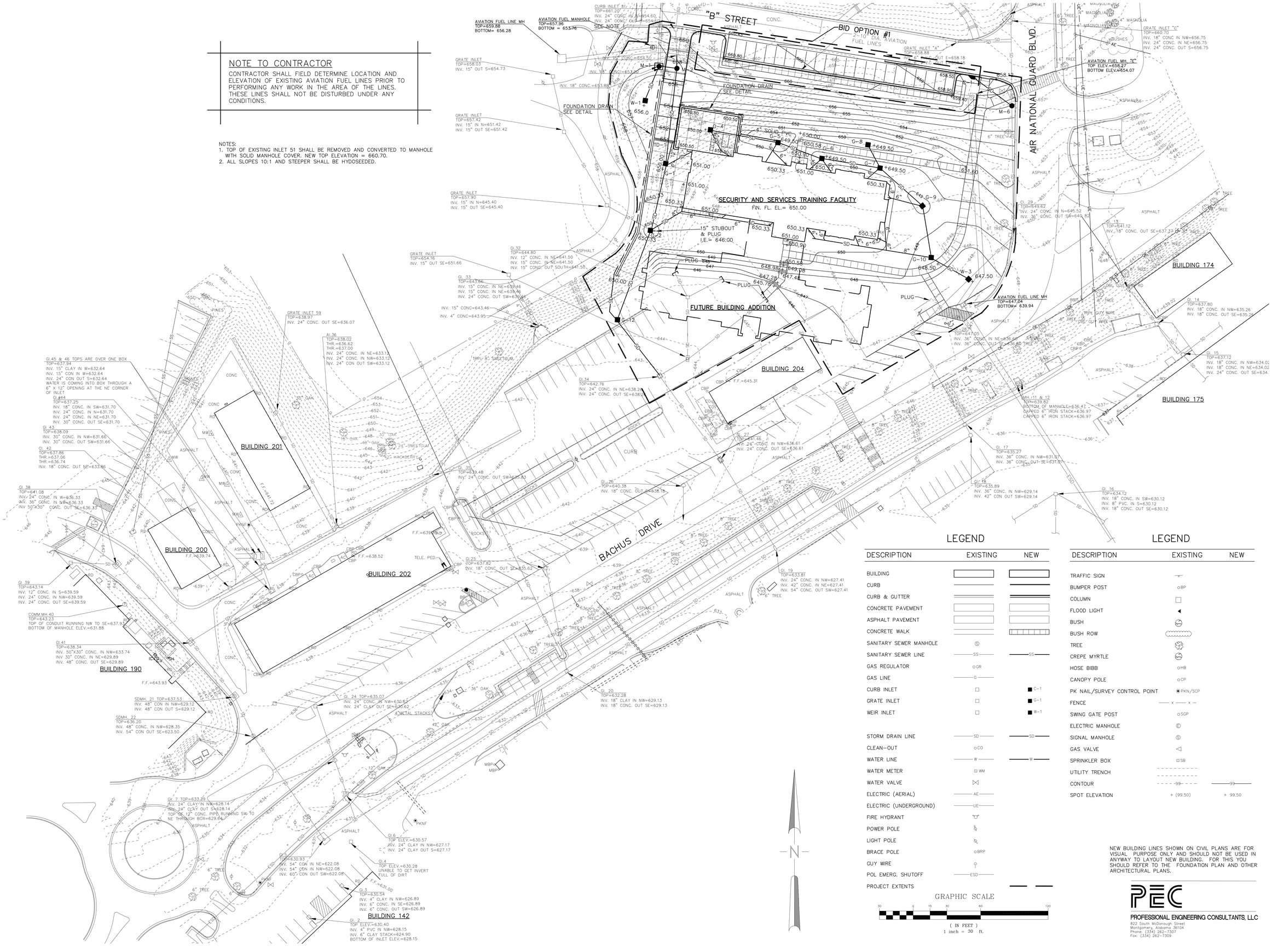

LEGEND

DESCRIPTION	EXISTING	NEW
BUILDING		
CURB		
CURB & GUTTER		
CONCRETE PAVEMENT		
ASPHALT PAVEMENT		
CONCRETE WALK		
SANITARY SEWER MANHOLE	Ⓢ	
SANITARY SEWER LINE	SS	SS
GAS REGULATOR	GR	
GAS LINE	G	
CURB INLET		G-1
GRATE INLET		G-1
WEIR INLET		W-1
STORM DRAIN LINE	SD	SD
CLEAN-OUT	CO	
WATER LINE	W	W
WATER METER	WM	
WATER VALVE		
ELECTRIC (AERIAL)	AE	
ELECTRIC (UNDERGROUND)	UE	
FIRE HYDRANT		
POWER POLE		
LIGHT POLE		
BRACE POLE	BRP	
GUY WIRE		
POL EMERG. SHUTOFF	ESD	
PROJECT EXTENTS		

LEGEND

DESCRIPTION	EXISTING	NEW
TRAFFIC SIGN		
BUMPER POST	BP	
COLUMN		
FLOOD LIGHT		
BUSH		
BUSH ROW		
TREE		
CREPE MYRTLE		
HOSE BIBB	HB	
CANOPY POLE	CP	
PK NAIL/SURVEY CONTROL POINT	PKN/SCP	
FENCE	x x	
SWING GATE POST	SGP	
ELECTRIC MANHOLE		
SIGNAL MANHOLE		
GAS VALVE		
SPRINKLER BOX	SB	
UTILITY TRENCH		
CONTOUR	99	99
SPOT ELEVATION	+ (99.50)	+ 99.50

GRAPHIC SCALE

30 0 15 30 60 120

(IN FEET)
1 inch = 30 ft.

NEW BUILDING LINES SHOWN ON CIVIL PLANS ARE FOR VISUAL PURPOSE ONLY AND SHOULD NOT BE USED IN ANYWAY TO LAYOUT NEW BUILDING. FOR THIS YOU SHOULD REFER TO THE FOUNDATION PLAN AND OTHER ARCHITECTURAL PLANS.

PEC
PROFESSIONAL ENGINEERING CONSULTANTS, LLC
822 South McDonough Street
Montgomery, Alabama 36104
Phone: (334) 262-7307
Fax: (334) 262-7309

SS&L
ARCHITECTURE & INTERIOR DESIGN
1115 South Court Street | Montgomery, AL 36104
Tel. 334. 263. 5162 | WWW.SSLARCH.COM

Rev.	Description	Date

Job Number: 12072
Date: JUNE 2024
Drawn By: SBG
Checked By: SBG
Project Title

New Security Building
117th Air Refueling Wing
Birmingham, AL

Sheet Title: Site Grading and Drainage Plan

Sheet Number: C4.1

ALABAMA LICENSED No. 5935 PROFESSIONAL ENGINEER PATRICK A. MOSLEY
6/14/24

NOTE TO CONTRACTOR

CONTRACTOR SHALL FIELD DETERMINE LOCATION AND ELEVATION OF EXISTING AVIATION FUEL LINES AND FUEL EMERGENCY SHUTOFF CABLES PRIOR TO PERFORMING ANY WORK IN THE AREA OF THE LINES. THESE LINES SHALL NOT BE DISTURBED UNDER ANY CONDITIONS, EXCEPT AS SHOWN.

NOTES:

1. ALL NEW GAS LINE WORK SHALL BE DONE BY LOCAL GAS COMPANY. GAS COMPANY SHALL INSTALL NEW SERVICE LINE , SET METER AND REGULATOR AT LOCATION INDICATION. CONTRACTOR SHALL CONTACT LOCAL GAS COMPANY TO COORDINATE WORK AND PAY ANY AND ALL SERVICE CHARGES FOR THIS WORK.

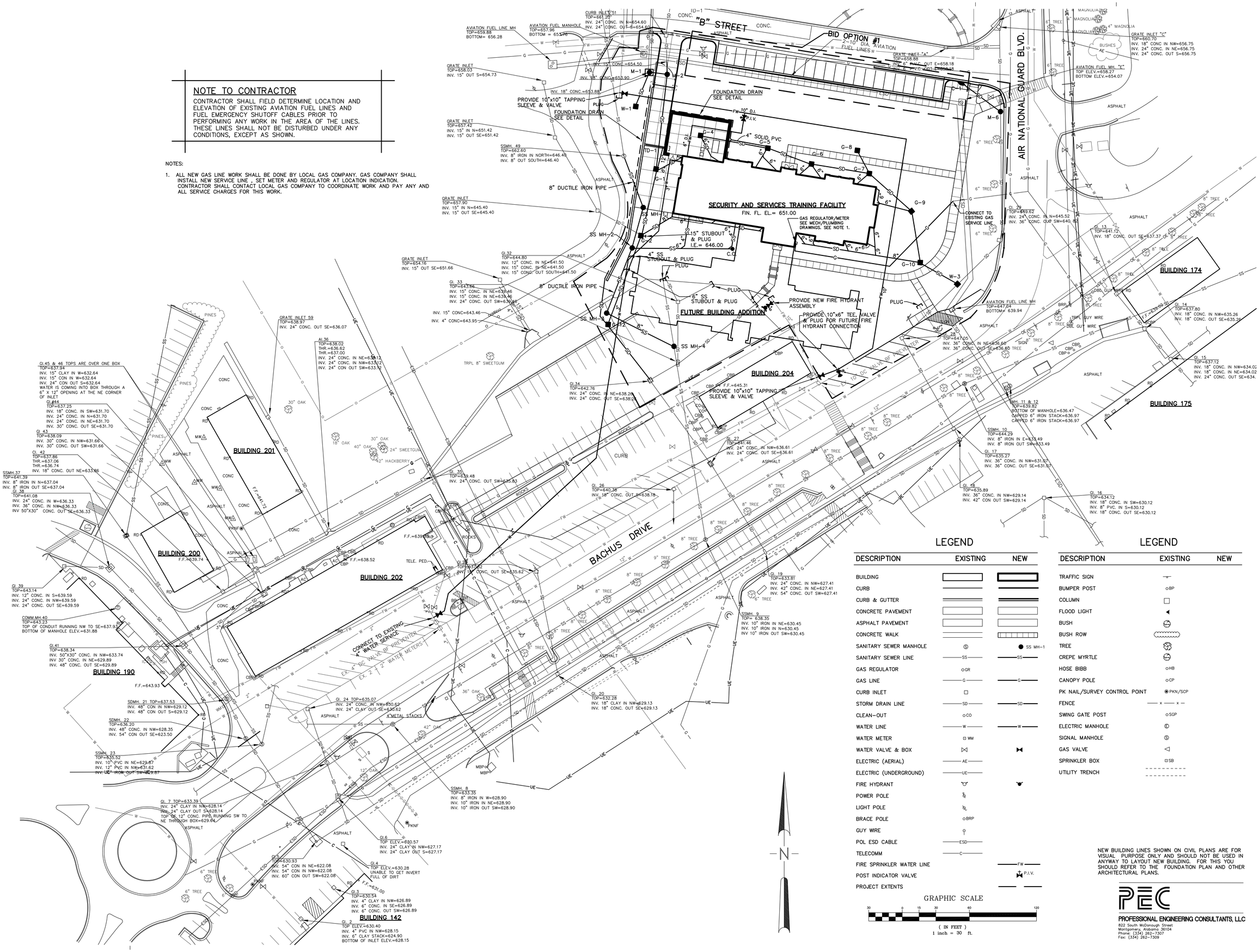

LEGEND

DESCRIPTION	EXISTING	NEW
BUILDING		
CURB		
CURB & GUTTER		
CONCRETE PAVEMENT		
ASPHALT PAVEMENT		
CONCRETE WALK		
SANITARY SEWER MANHOLE	Ⓢ	● SS MH-1
SANITARY SEWER LINE	—SS—	—SS—
GAS REGULATOR	○GR	
GAS LINE	—G—	—G—
CURB INLET	□	
STORM DRAIN LINE	—SD—	—SD—
CLEAN-OUT	○CO	
WATER LINE	—W—	—W—
WATER METER	⊡WM	
WATER VALVE & BOX	⋈	⋈
ELECTRIC (AERIAL)	—AE—	
ELECTRIC (UNDERGROUND)	—UE—	
FIRE HYDRANT		
POWER POLE		
LIGHT POLE		
BRACE POLE	○BRP	
GUY WIRE		
POL ESD CABLE	—ESD—	
TELECOMM	—C—	
FIRE SPRINKLER WATER LINE		—FW—
POST INDICATOR VALVE		P.I.V.
PROJECT EXTENTS		

LEGEND

DESCRIPTION	EXISTING	NEW
TRAFFIC SIGN		
BUMPER POST	○BP	
COLUMN	□	
FLOOD LIGHT	◄	
BUSH		
BUSH ROW		
TREE		
CREPE MYRTLE		
HOSE BIBB	○HB	
CANOPY POLE	○CP	
PK NAIL/SURVEY CONTROL POINT	◉PKN/SCP	
FENCE	—x—x—	
SWING GATE POST	○SGP	
ELECTRIC MANHOLE	Ⓔ	
SIGNAL MANHOLE	Ⓢ	
GAS VALVE	◁	
SPRINKLER BOX	⊡SB	
UTILITY TRENCH		

GRAPHIC SCALE

30 0 15 30 60 120

(IN FEET)
1 inch = 30 ft.

NEW BUILDING LINES SHOWN ON CIVIL PLANS ARE FOR VISUAL PURPOSE ONLY AND SHOULD NOT BE USED IN ANYWAY TO LAYOUT NEW BUILDING. FOR THIS YOU SHOULD REFER TO THE FOUNDATION PLAN AND OTHER ARCHITECTURAL PLANS.

PEC
PROFESSIONAL ENGINEERING CONSULTANTS, LLC
822 South McDonough Street
Montgomery, Alabama 36104
Phone: (334) 262-7307
Fax: (334) 262-7309

SS&L
ARCHITECTURE & INTERIOR DESIGN
1115 South Court Street | Montgomery, AL 36104
Tel. 334. 265. 5162 | WWW.SSLARCH.COM

Rev.	Description	Date

Job Number: 12072

Date: JUNE 2024

Drawn By: SBG

Checked By: SBG

Project Title

New Security Building
117th Air Refueling Wing
Birmingham, AL

Sheet Title: Site Utilities Plan

Sheet Number: C5.1

ALABAMA LICENSED No. 5935 PROFESSIONAL ENGINEER PATRICK A. MOSELEY

6/14/24

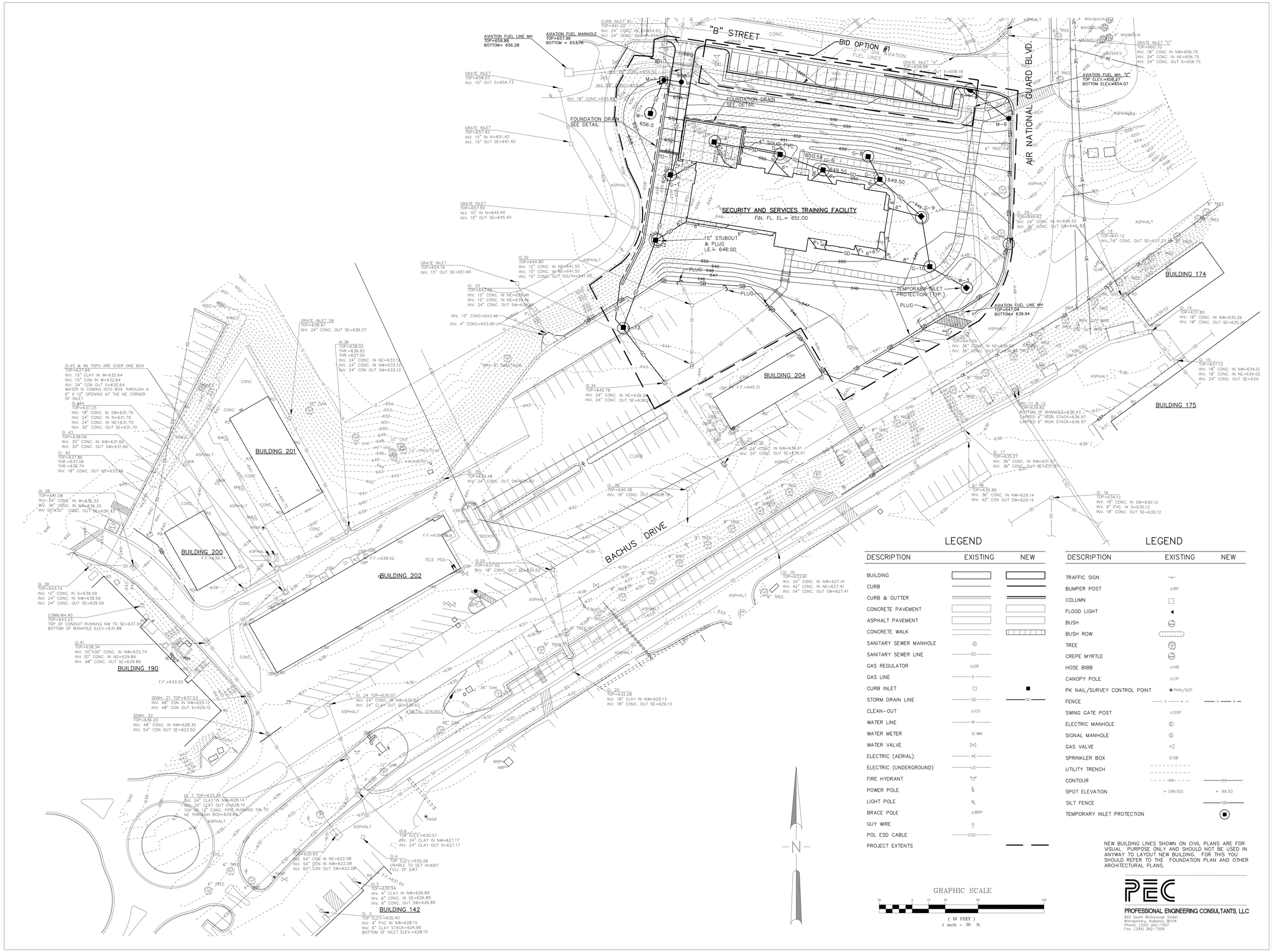

LEGEND

DESCRIPTION	EXISTING	NEW
BUILDING		
CURB		
CURB & GUTTER		
CONCRETE PAVEMENT		
ASPHALT PAVEMENT		
CONCRETE WALK		
SANITARY SEWER MANHOLE	Ⓢ	
SANITARY SEWER LINE	SS	
GAS REGULATOR	GR	
GAS LINE	G	
CURB INLET		
STORM DRAIN LINE	SD	SD
CLEAN-OUT	CO	
WATER LINE	W	
WATER METER	WM	
WATER VALVE		
ELECTRIC (AERIAL)	AE	
ELECTRIC (UNDERGROUND)	UE	
FIRE HYDRANT		
POWER POLE		
LIGHT POLE		
BRACE POLE	BRP	
GUY WIRE		
POL ESD CABLE	ESD	
PROJECT EXTENTS		

LEGEND

DESCRIPTION	EXISTING	NEW
TRAFFIC SIGN		
BUMPER POST	BP	
COLUMN		
FLOOD LIGHT		
BUSH		
BUSH ROW		
TREE		
CREPE MYRTLE		
HOSE BIBB	HB	
CANOPY POLE	CP	
PK NAIL/SURVEY CONTROL POINT	PKN/SCP	
FENCE	x x	x x
SWING GATE POST	SGP	
ELECTRIC MANHOLE	Ⓔ	
SIGNAL MANHOLE	Ⓢ	
GAS VALVE		
SPRINKLER BOX	SB	
UTILITY TRENCH		
CONTOUR	99	99
SPOT ELEVATION	+ (99.50)	+ 99.50
SILT FENCE		SB
TEMPORARY INLET PROTECTION		

NEW BUILDING LINES SHOWN ON CIVIL PLANS ARE FOR VISUAL PURPOSE ONLY AND SHOULD NOT BE USED IN ANYWAY TO LAYOUT NEW BUILDING. FOR THIS YOU SHOULD REFER TO THE FOUNDATION PLAN AND OTHER ARCHITECTURAL PLANS.

PEC
PROFESSIONAL ENGINEERING CONSULTANTS, LLC
822 South McDonough Street
Montgomery, Alabama 36104
Phone: (334) 262-7307
Fax: (334) 262-7309

SS&L
ARCHITECTURE & INTERIOR DESIGN
1115 South Court Street | Montgomery, AL 36104
Tel. 334. 263. 5162 | WWW.SSLARCH.COM

Rev.	Description	Date

Job Number: 12072
Date: JUNE 2024
Drawn By: SBG
Checked By: SBG
Project Title

New Security Building
117th Air Refueling Wing
Birmingham, AL

Sheet Title: Site Erosion Control and B.M.P. Plan

Sheet Number: C6.1

ALABAMA LICENSED No. 5935 PROFESSIONAL ENGINEER PATRICK A. MOSELEY
6/14/24

"B" STREET
CONC.
ASPHALT
BID OPTION #1
3' WIDE VALLEY GUTTER
2-10" DIA. AVIATION FUEL LINES
4" WIDE PAINTED PARKING STRIPES (WHITE)
NEW CURB & GUTTER TO HERE IN BASE BID
SECURITY GATE (20' WIDE)
9.50'
9.50'
9 EQUAL SPACES
9 EQUAL SPACES
19'
9' TYP.
214'
6'
5'
T/W= 657.50
N 1300156.4624
E 2195772.9653
6" THICK CONCRETE PAVEMENT ON 6" CRUSHED AGGREGATE BASE
4" THICK CONCRETE PAVEMENT ON 4" CRUSHED AGGREGATE BASE
NEW RETAINING WALL
MECH. YARD
4" THICK CONCRETE SIDEWALK
H.C. CURB CUT
6" TREE
6" TREE
T/W= 657.50
TRENCH DRAIN
5 EQUAL SPACES
54.73'
5 EQUAL SPACES
37.46'
N 1300095.3752
E 2195798.6737
6" THICK CONCRETE PAVEMENT ON 6" CRUSHED AGGREGATE BASE
N 1300067.4008
E 2195971.7604
15'
6'
ASPHALT
SECURITY AND SERVICES TRAINING FACILITY
FIN. FL. EL.= 651.00
5'
8'
45'R
T/W= 657.50
N 1300021.8695
E 2195751.2123
6'
6'
CONCRETE STEPS
SEE SHEET C8.1 FOR DETAILS
N 1299983.5806
E 2195731.6643
T/W= 651.00
NEW FENCE TO MATCH EXISTIN
HANDICAP PARKING SIGN - (VAN ACCESSIBLE)
ASPHALT PATCH

PAVEMENT JOINT LEGEND

CJ = CONSTRUCTION JOINT
EJ = EXPANSION JOINT
CTRJ = CONTRACTION JOINT

PAVEMENT REINFORCING LEGEND

(R) = 6x6-W2.9xW2.9 CENTERED

N

GRAPHIC SCALE

10 0 5 10 20 40

(IN FEET)
1 inch = 10 ft.

PEC
PROFESSIONAL ENGINEERING CONSULTANTS, LLC
822 South McDonough Street
Montgomery, Alabama 36104
Phone: (334) 262-7307
Fax: (334) 262-7309

SS&L
ARCHITECTURE & INTERIOR DESIGN
1115 South Court Street | Montgomery, AL 36104
Tel. 334. 265. 5162 | WWW.SSLARCH.COM

Rev.	Description	Date
1	ADD #2	1/6/23

Job Number 12072
Date JUNE 2024
Drawn By SBG
Checked By SBG
Project Title

New Security Building
117th Air Refueling Wing
Birmingham, AL

Sheet Title
Pavement Joint Layout

Sheet Number
C7.1

ALABAMA LICENSED No. 5935 PROFESSIONAL ENGINEER PATRICK A. MOSELEY
6/14/24

LIST OF ABBREVATIONS

BLDG.	BUILDING
BP	BUMPER POST
CONC.	CONCRETE
EL.	ELEVATION
E	EAST
F.F. OR FIN. FL.	FINISH FLOOR
INV.	INVERT
N	NORTH
NW	NORTHWEST
PB	POWER BOX
PM	POWER METER
PC	POWER CONNECTION
S	SOUTH
SE	SOUTHEAST
SW	SOUTHWEST
PT.	POINT
SCP	SURVEY CONTROL POINT
RD	ROOF DRAIN
T.B.M.	TEMPORARY BENCH MARK
W	WEST
C.J.	CONSTRUCTION JOINT
E.J.	EXPANSION JOINT
S.C.	SAW CUT CONTRACTION JOINT
R	RADIUS
±	PLUS OR MINUS
@	AT
BIP	BLOCK AND GRAVEL INLET PROTECTION
FIP	FABRIC DROP INLET PROTECTION
SB	SEDIMENT BARRIER

NOTES:

1. THE UNDERGROUND UTILITIES SHOWN HAVE BEEN LOCATED FROM FIELD SURVEY INFORMATION AND EXISTING DRAWINGS. THE SURVEYOR MAKES NO GUARANTEE THAT THE UNDERGROUND UTILITIES SHOWN COMPRISE ALL SUCH UTILITIES IN THE AREA, EITHER IN SERVICE OR ABANDONED. THE SURVEYOR FURTHER DOES NOT WARRANT THAT THE UNDERGROUND UTILITIES SHOWN ARE IN THE EXACT LOCATION INDICATED ALTHOUGH HE DOES CERTIFY THAT THEY ARE LOCATED AS ACCURATELY AS POSSIBLE FROM THE INFORMATION AVAILABLE. THE SURVEYOR HAS NOT PHYSICALLY LOCATED ALL OF THE UNDERGROUND UTILITIES.

GENERAL NOTES FOR SOIL EROSION AND SEDIMENT CONTROL

1. AN ALABAMA DEPARTMENT OF ENVIRONMENTAL MANAGEMENT (ADEM) STORMWATER PERMIT (NOI) FOR THIS PROJECT WILL BE REQUIRED DUE TO THE DISTURBED AREA BEING MORE THAN ONE (1) ACRE. THE CONTRACTOR SHALL BE RESPONSIBLE FOR OBTAINING THE PERMIT AND INSTALLATION OF EROSION CONTROL MEASURES AND THE MAINTENANCE OF SAME DURING ALL PHASES OF CONSTRUCTION.
2. ADDITIONAL EROSION AND SEDIMENT CONTROL MEASURES SHALL BE INSTALLED IF DEEMED NECESSARY BY ONSITE INSPECTION DUE TO CONDITIONS NOT SHOWN ON PLANS.
3. FAILURE TO PROPERLY INSTALL AND MAINTAIN EROSION CONTROL PRACTICES MAY RESULT IN CONSTRUCTION BEING HALTED.
4. EROSION CONTROL MEASURES WILL BE INSPECTED AT LEAST WEEKLY AND FOLLOWING RAINFALL AND REPAIRED BY CONTRACTOR.
5. ALL SILT FENCING SHALL COMPLY WITH ALABAMA DEPARTMENT OF TRANSPORTATION STANDARDS AND SPECIFICATIONS.
6. STORM DRAIN SYSTEMS SHALL BE MAINTAINED CLEAN AND FREE OF SILT AND DEBRIS.
7. A RESPONSE TO A NOTIFICATION OF NON COMPLIANCE OR INADEQUATE MEASURES SHALL BE MADE WITHIN 24 HOURS AFTER RECEIVING SUCH NOTIFICATION, UNLESS OTHERWISE SPECIFIED FOR CONDITIONS DEEMED CRITICAL.
8. IMPLEMENTATION AND MAINTENANCE:
   A) IMPLEMENTATION:
      1. NO CLEARING, GRADING, FILLING, OR OTHER LAND DISTURBING ACTIVITIES SHALL BE PERMITTED UNTIL APPROVED EROSION AND SEDIMENT CONTROL MEASURES HAVE BEEN INSTALLED, EXCEPT THOSE OPERATIONS NEEDED TO INSTALL SUCH MEASURES.
      2. THESE EROSION AND SEDIMENT CONTROL MEASURES SHALL APPLY TO ALL FEATURES OF THE CONSTRUCTION SITE, INCLUDING BUT NOT LIMITED TO STREET AND UTILITY INSTALLATIONS AS WELL.
   B) MAINTENANCE: ALL EROSION AND SEDIMENT CONTROL MEASURES SHALL BE CONTINUOUSLY MAINTAINED BY THE CONTRACTOR DURING THE CONSTRUCTION PHASE OF THE DEVELOPMENT.
9. ALL EROSION CONTROL MEASURES SHALL BE REMOVED AT THE COMPLETION OF THIS CONTRACT.

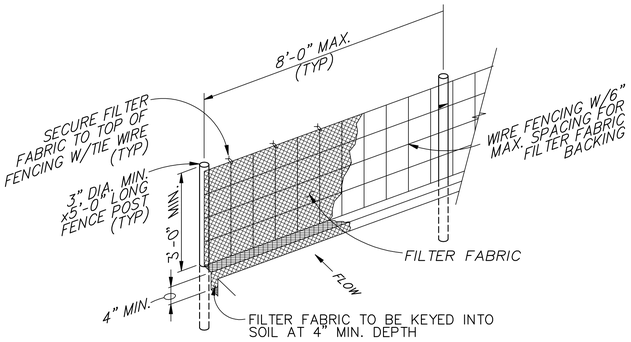

SILT FENCE DETAIL
NTS

NOTE: CONTRACTOR SHALL INSTALL AND MAINTAIN SILT FENCES WHERE SHOWN ON THE DRAWINGS PRIOR TO ALLOWING ANY CONSTRUCTION ACTIVITIES TO COMMENCE

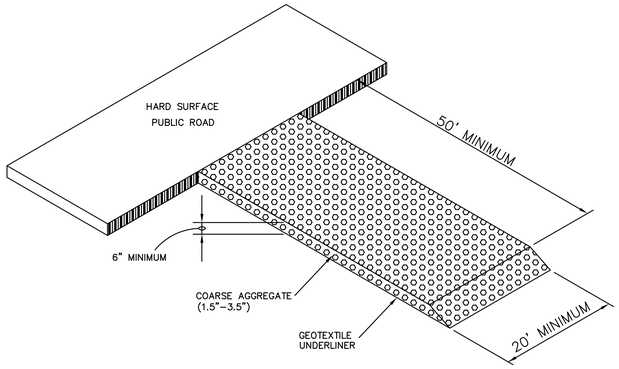

NOTE: UNLESS SHOWN OTHERWISE ON PLANS, CONTRACTOR HAS OPTION ON EXACT LOCATION OF CONSTRUCTION EXIT.

STABILIZED CRUSHED STONE CONSTRUCTION EXIT PAD
NOT TO SCALE

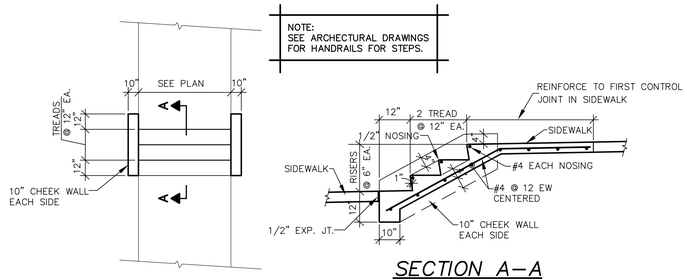

PLAN
1/4"=1'-0"

SECTION A–A
1/2"=1'-0"

NOTE: SEE PLAN FOR NUMBER OF TREADS AND RISERS.

TYPICAL CONCRETE STEP DETAILS

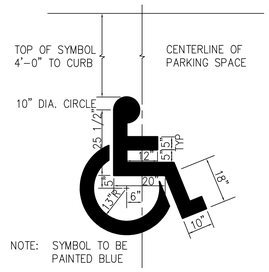

INTERNATIONAL SYMBOL OF ACCESS
NTS

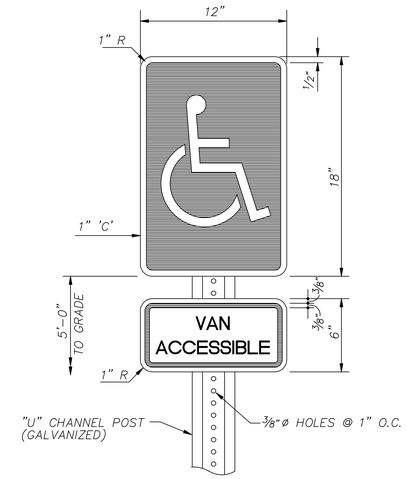

NOTE: MOUNT EACH SIGN W/ 2 – 5/16"ø GALV. STL. BOLTS TO 3½" (4LB./FT.) "U" CHANNEL SET 1'–6" MIN. BELOW FINISH GRADE & ENCASED IN 6"ø CONC. FILLED HOLE. SIGN SHALL BE PLACED AS NOT TO BE OBSCURED BY A VEHICLE PARKED IN THE SPACE.

HANDICAPPED PARKING SIGN
NTS

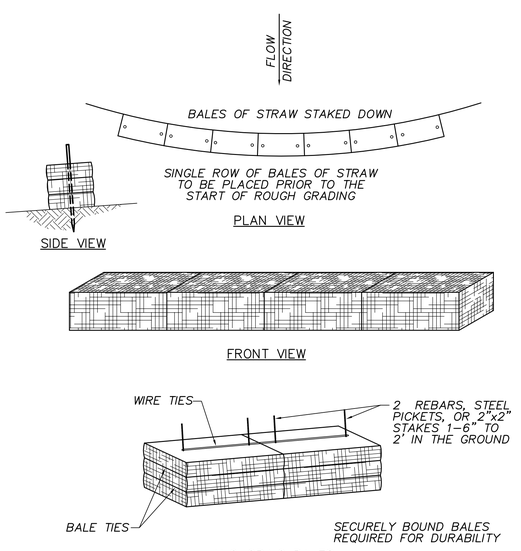

TEMPORARY STRAW BALE SEDIMENT BARRIER
NTS

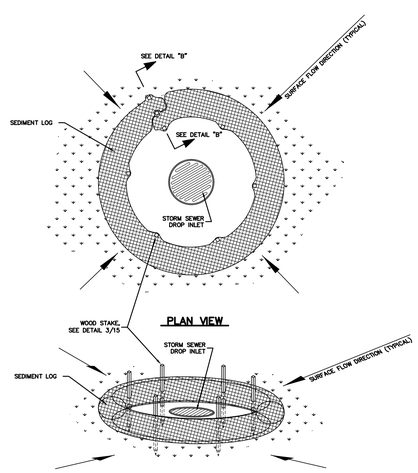

PLAN VIEW

SEDIMENT LOGS
DROP INLET PROTECTION
NTS

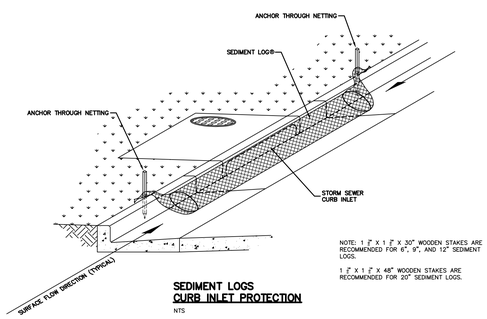

NOTE: 1 2" X 1 2" X 30" WOODEN STAKES ARE RECOMMENDED FOR 6", 9", AND 12" SEDIMENT LOGS.

1 2" X 1 2" X 48" WOODEN STAKES ARE RECOMMENDED FOR 20" SEDIMENT LOGS.

SEDIMENT LOGS
CURB INLET PROTECTION
NTS

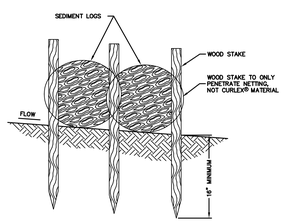

STAKE DETAIL "B"
NTS

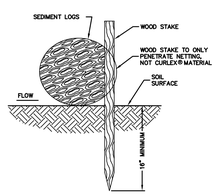

STAKE DETAIL "A"
NTS

PEC
PROFESSIONAL ENGINEERING CONSULTANTS, LLC
822 South McDonough Street
Montgomery, Alabama 36104
Phone: (334) 262-7307
Fax: (334) 262-7309

SS&L
ARCHITECTURE & INTERIOR DESIGN
1115 South Court Street | Montgomery, AL 36104
Tel. 334. 265. 5162 | WWW.SSLARCH.COM

Rev.	Description	Date

Job Number: 12072
Date: JUNE 2024
Drawn By: SBG
Checked By: SBG
Project Title

New Security Building
117th Air Refueling Wing
Birmingham, AL

Sheet Title: Site Details

Sheet Number: C8.1

ALABAMA LICENSED No. 5935 PROFESSIONAL ENGINEER PATRICK A. MOSELEY
6/14/24

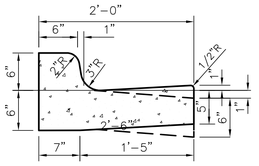

TYPICAL CONCRETE CURB & GUTTER
NTS

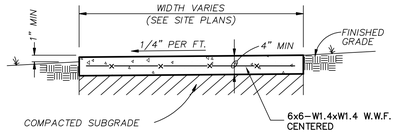

SIDEWALK DETAIL
NTS

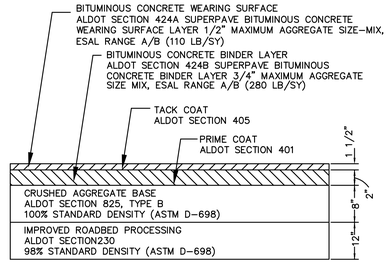

ASPHALT PAVEMENT SECTION
NTS

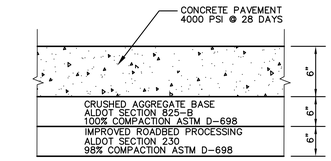

RIGID PAVEMENT SECTION

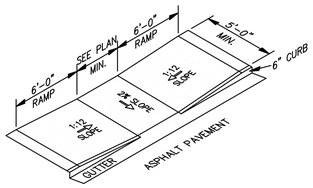

HANDICAP RAMP DETAILS
NTS

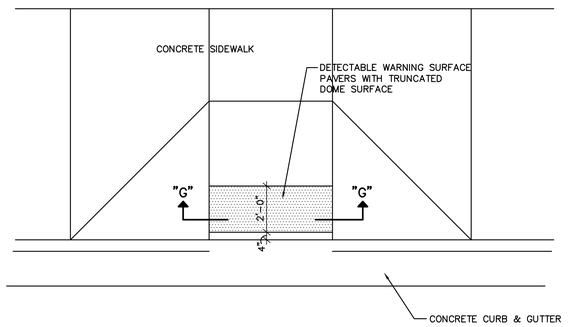

TYPICAL PLAN

GENERAL NOTES FOR DETECTABLE WARNINGS:

1. FURNISH DETECTABLE WARNING PAVER UNITS MEETING ALL REQUIREMENTS OF ADA, AASHTO, ASTM C-936, C-33. LAY IN A TWO BY TWO UNIT BASKET WEAVE PATTERN OR AS DIRECTED.
2. CURB RAMPS MUST CONTAIN A DETECTABLE WARNING SURFACE THAT CONSISTS OF RAISED TRUNCATED DOMES. THE SURFACE MUST CONTRAST VISUALLY WITH ADJOINING SURFACES, INCLUDING SIDE FLARES. FURNISH DARK BROWN OR DARK RED DETECTABLE WARNING SURFACE ADJACENT TO UNCOLORED CONCRETE UNLESS SPECIFIED ELSEWHERE.
3. DETECTABLE WARNING SURFACES MUST BE SLIP RESISTANT AND NOT ALLOW WATER TO ACCUMULATE.
4. ALIGN TRUNCATED DOMES IN THE DIRECTION OF PEDESTRAIN TRAVEL WHEN ENTERING THE STREET.
5. DETECTABLE WARNING SURFACES SHALL BE A MINIMUM OF 24" IN DEPTH IN THE DIRECTION OF PEDESTRAIN TRAVEL, AND EXTEND THE FULL WIDTH OF THE CURB RAMP OR LANDING WHERE THE PEDESTRAIN ACCESS ROUTE ENTERS THE STREET.
6. LAY FULL-SIZE UNITS FIRST FOLLOWED BY CLOSURE UNITS CONSISTING OF AT LEAST 25 PERCENT OF A FULL UNIT. CUT DETECTABLE WARNING PAVER UNITS USING A POWER SAW.

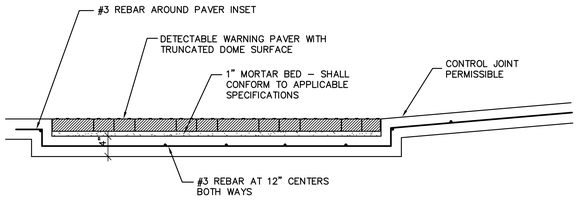

SECTION G-G

DETECTABLE WARNING SURFACE ON LANDING AT STREET EDGE
NTS

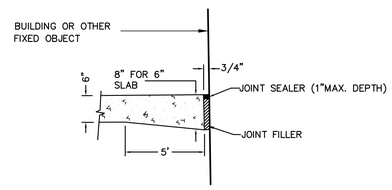

EXPANSION JOINT (EJ)

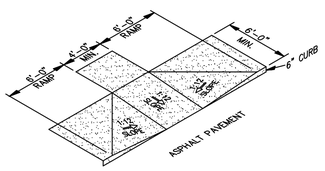

RAMP WITH WALKS PARALLEL AND PERPENDICULAR TO ROAD

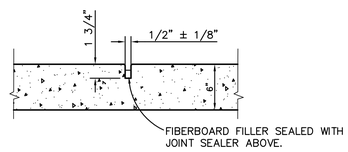

NOTE: INSTALL CONTRACTION JOINTS WHERE SHOWN ON PLANS.

CONTRACTION JOINT DETAIL (CTRJ)
NTS

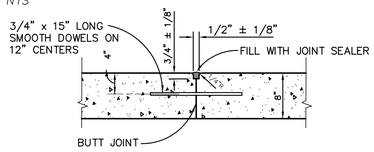

NOTE: INSTALL CONSTRUCTION JOINTS AT THE END OF EACH DAY'S PAVING OPERATION AND AT OTHER POINTS WHERE PAVING IS DISCONTINUED LONG ENOUGH FOR CONCRETE TO SET. LOCATE CONSTRUCTION JOINTS IN PLACE OF CONTRACTION JOINTS.

CONSTRUCTION JOINT DETAIL (CJ)
NTS

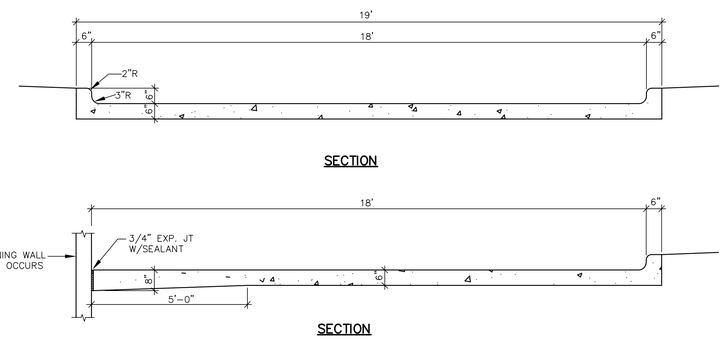

SECTIONS THRU CONCRETE DRIVEWAY

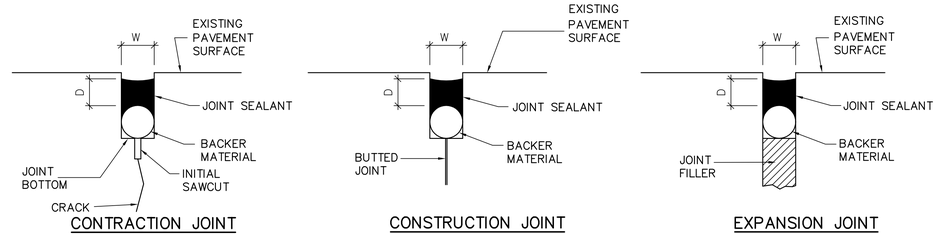

W= WIDTH OF SEALANT RESERVOIR (1/2" MIN, 5/8" MAX.)
D= DEPTH OF SEALANT; 0.5W FOR SILICONE SEALANT
DIAMETER OF BACKER MATERIAL= W + 1/8"

NOTE:
TOP OF SEALANT SHALL BE 1/4" TO 1/16" BELOW TOP OF PAVEMENT

JOINT SEALANT DETAILS (BACKER MATERIAL)
N.T.S.

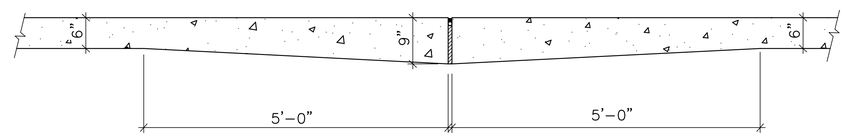

EXPANSION JOINT (EJ)
N.T.S.

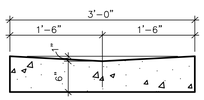

NOTE:
PROVIDE TRANSVERSE CONTRACTION JOINTS AT 10' CENTERS MAXIMUM.

CONCRETE VALLEY GUTTER
NTS

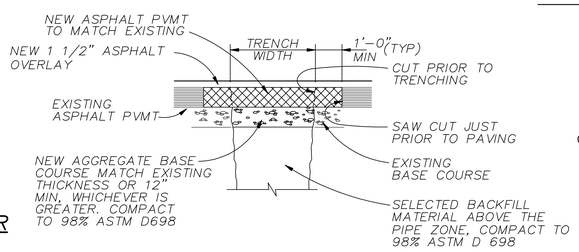

PAVEMENT PATCH DETAIL
N.T.S.

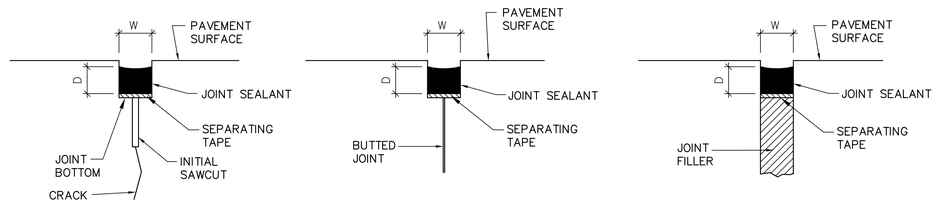

W= WIDTH OF SEALANT RESERVOIR (1/2" MIN, 5/8" MAX.)
D= DEPTH OF SEALANT; 0.5W FOR SILICONE SEALANT
DIAMETER OF BACKER MATERIAL= W + 1/8"

NOTE:
TOP OF SEALANT SHALL BE 1/4" TO 1/16" BELOW TOP OF PAVEMENT

JOINT SEALANT DETAILS (SEPARATING TAPE)
N.T.S.

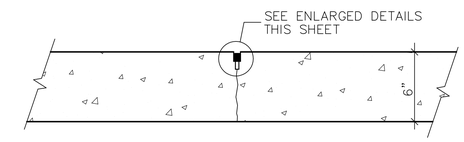

SAW CUT (S.C.) CONTRACTION JOINT
N.T.S.

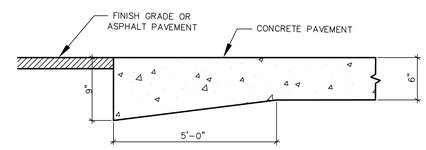

THICKENED EDGE DETAIL
NTS

PEC
PROFESSIONAL ENGINEERING CONSULTANTS, LLC
822 South McDonough Street
Montgomery, Alabama 36104
Phone: (334) 262-7307
Fax: (334) 262-7309

SS&L
ARCHITECTURE & INTERIOR DESIGN
1115 South Court Street | Montgomery, AL 36104
Tel. 334. 265.3162 | WWW.SSLARCH.COM

Rev.	Description	Date

Job Number: 12072
Date: JUNE 2024
Drawn By: SBG
Checked By: SBG
Project Title

New Security Building
117th Air Refueling Wing
Birmingham, AL

Sheet Title: Site Details

Sheet Number: C9.1

ALABAMA LICENSED No. 5935 PROFESSIONAL ENGINEER PATRICK A. MOSELEY
6/14/24

STORM DRAINAGE PIPE AND STRUCTURE SCHEDULE

STRUCTURE		PIPES					STRUCTURES			REMARKS
FROM	TO	PIPE LGTH. FT.	DIA. IN.	SLOPE %	INVERT ELEV. UP STREAM	INVERT ELEV. DOWN STREAM	NO.	TYPE STURCTURE	TOP ELEV.	
W-1	M-1	32	15	1.00	653.32	653.00	W-1	WEIR INLET	656.83	
M-1	M-2	15	24	1.00	653.00	652.85	M-1	MANHOLE	658.00	
EX 24" PIPE	M-2	12	24	1.00	654.50	654.38	M-2	MANHOLE	657.40	VERIFY EXISTING PIPE ELEVATION PRIOR TO SETTING DISCHARGE ELEVATION (M-2)
M-2	G-1	87	24	1.84	645.50	643.90	G-1	GRATE INLET	650.00	
TD-1	G-1	22	12	9.00	649.00	647.00	TD-1	TRENCH DRAIN	651.00	
G-1	G-2	58	24	1.16	643.67	643.00	G-2	GRATE INLET	649.75	PROVIDE 15" STUBOUT & PLUG ON EAST SIDE I.E.= 646.00
G-2	G-12	82	24	1.00	642.22	641.40	G-12	GRATE INLET	644.50	
G-12	EX. G.I. 34	60	24	1.00	641.40	640.80				
C-1	M-6	43	18	5.47	655.35	653.00	C-1	CURB INLET	658.85	VERIFY EXISTING PIPE ELEVATION AT M-6 PRIOR TO SETTING SLOPE FROM C-1 TO M-6/ PRIOR TO ESTABLISHING UPSTREAM ELEVATION ON M-6
							M-6	MANHOLE	657.00	TO BE CONSTRUCTED ON EXIST. PIPE CALCULATED INV. EL. EXISTING PIPE =652.30
G-4	G-5	61	12	1.00	647.50	646.89	G-4	GRATE INLET	650.00	
G-5	G-6	40	18	1.00	646.50	646.10	G-5	GRATE INLET	649.50	
G-6	G-7	50	18	1.00	646.10	645.60	G-6	GRATE INLET	649.50	
G-8	G-7	22	18	1.00	646.50	646.28	G-7	GRATE INLET	649.50	
G-7	G-9	49	18	1.00	645.60	645.11	G-8	GRATE INLET	649.50	
G-9	G-10	45	18	1.00	645.11	644.47	G-9	GRATE INLET	648.50	
G-10	W-3	38	18	1.24	644.47	644.00	G-10	GRATE INLET	648.25	
							W-3	WEIR INLET	648.33	TO BE CONSTRUCTED ON EXIST. 36" PIPE CALCULATED INV. EL. EX. PIPE =638.95± FIELD VERIFY

NOTES:
1. PIPE LENGTHS SHOWN IN SCHEDULE ARE HORIZONTAL DISTANCES.
2. PIPES FROM BUILDING DOWNSPOUTS TO DRAINAGE SYSTEM ARE NOT SHOWN IN SCHEDULE. SEE GRADING PLAN FOR PIPE SIZES AND LENGTHS. PIPES SHALL SLOPE AT MINIMUM 1.0%.

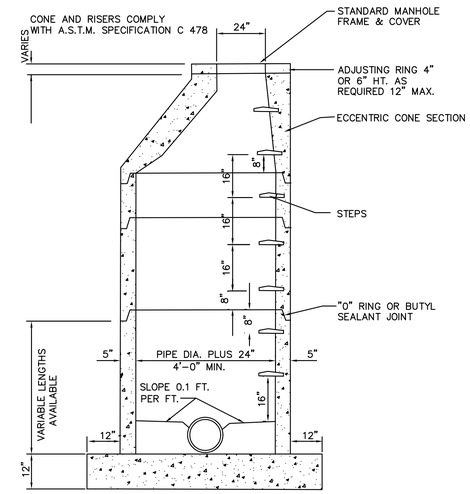

PRECAST CONCRETE MANHOLE
NTS

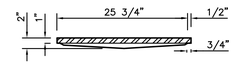

SECTION "B-B"

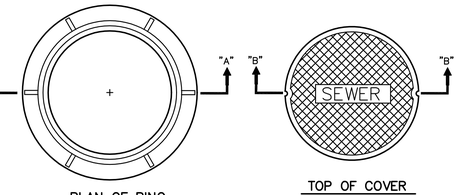

PLAN OF RING

TOP OF COVER

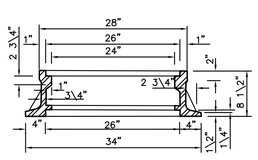

SECTION "A-A"

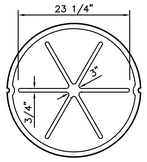

BOTTOM OF COVER

STANDARD MANHOLE COVER & RING
NTS

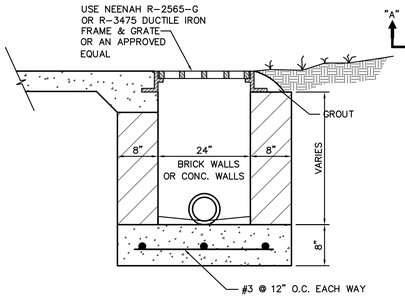

GRATE INLET
NTS

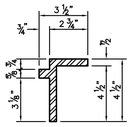

SECTION "X"-"X"

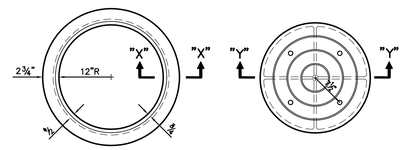

PLAN OF RING

PLAN OF COVER

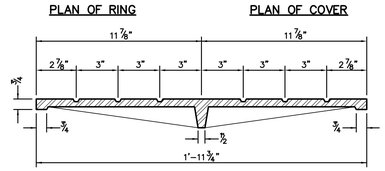

SECTION "Y"-"Y"

LIGHT DUTY MANHOLE FRAME & COVER
NTS

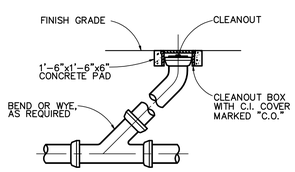

TYPICAL CLEANOUT DETAIL
NTS

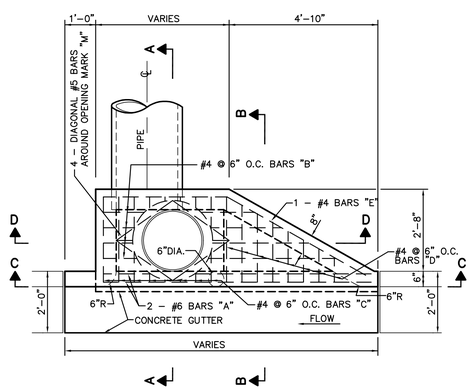

PLAN
NTS

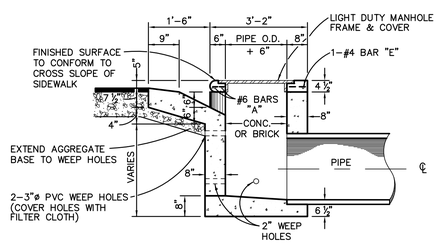

SECTION A-A
NTS

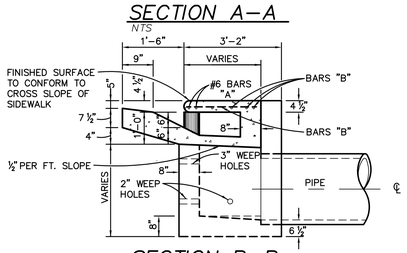

SECTION B-B
NTS

TYPE 'S' CURB INLET DETAILS

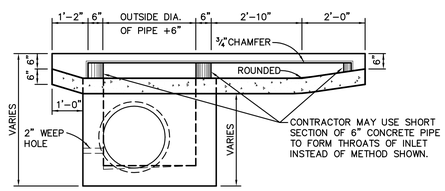

SECTION C-C
NTS

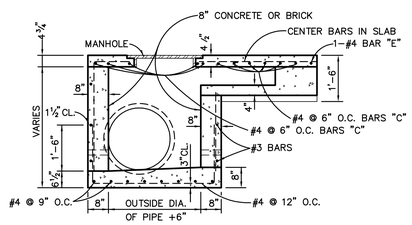

SECTION D-D
NTS

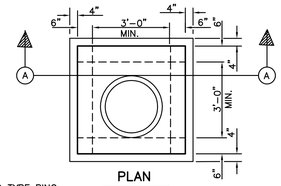

PLAN

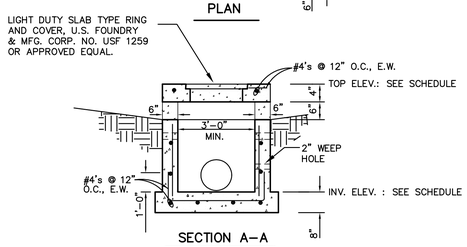

SECTION A-A

WEIR INLET DETAIL
NTS

PEC
PROFESSIONAL ENGINEERING CONSULTANTS, LLC
822 South McDonough Street
Montgomery, Alabama 36104
Phone: (334) 262-7307
Fax: (334) 262-7309

ALABAMA LICENSED No. 5935 PROFESSIONAL ENGINEER PATRICK A. MOSELEY
6/14/24

SS&L
ARCHITECTURE & INTERIOR DESIGN
1115 South Court Street | Montgomery, AL 36104
Tel. 334. 265.3162 | WWW.SSLARCH.COM

Rev.	Description	Date

Job Number: 12072
Date: JUNE 2024
Drawn By: SBG
Checked By: SBG
Project Title

New Security Building
117th Air Refueling Wing
Birmingham, AL

Sheet Title: Site Details

Sheet Number: C10.1

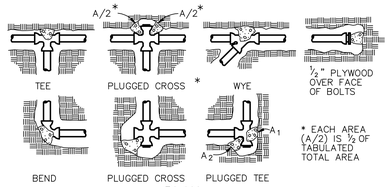

* EACH AREA (A/2) IS ½ OF TABULATED TOTAL AREA

PLAN
NTS

BEARING AREA OF THRUST BLOCKS IN SQ. FT. (HORIZONTAL BENDS)							
FITTING SIZE	TEE, WYE, PLUG, OR CAP	90° BEND PLUGGED CROSS	TEE PLUGGED RUN		BEND ANGLE		
			A1	A2	45°	22½°	11¼°
4	1.0	1.4	1.9	1.4	1.0	—	—
6	2.1	3.0	4.3	3.0	1.6	1.0	—
8	3.8	5.3	7.6	5.4	2.9	1.5	1.0
10	5.9	8.4	11.8	8.4	4.6	2.4	1.2
12	8.5	12.0	17.0	12.0	6.6	3.4	1.7
14	11.5	16.3	23.0	16.3	8.9	4.6	2.3
16	15.0	21.3	30.0	21.3	11.6	6.0	3.0
18	19.0	27.0	38.0	27.0	14.6	7.6	3.8
20	23.5	33.3	47.0	33.3	18.1	9.4	4.7
24	34.0	48.0	68.0	48.0	26.2	13.6	6.8

VOLUME OF THRUST BLOCK IN CUBIC YARDS (VERTICAL BENDS)			
FITTING SIZE	BEND ANGLE		
	45°	22½°	11¼°
4	1.1	0.4	0.2
6	2.7	1.0	0.4
8	4.0	1.5	0.6
10	6.0	2.3	0.9
12	8.5	3.2	1.3
14	11.5	4.3	1.8
16	14.8	5.6	2.3

* SEE NOTE 5.

FITTING SIZE	ROD SIZE	EMBEDDMENT
12" AND LESS	#6	30"
14"–16"	#8	36"

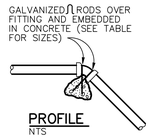

PROFILE
NTS

THRUST BLOCK NOTES

1. KEEP CONCRETE CLEAR OF JOINT AND JOINT ACCESSORIES.
2. CONCRETE THRUST BLOCKING SHALL BE POURED AGAINST UNDISTURBED EARTH.
3. REQUIRED VOLUMES OR BEARING AREAS AT FITTINGS SHALL BE AS INDICATED BELOW, ADJUSTED, IF NECESSARY, TO CONFORM TO THE TEST PRESSURE(S) AND ALLOWABLE SOIL BEARING STRESS(ES) STATED IN THE SPECIFICATIONS.
4. THRUST BLOCK VOLUMES FOR VERTICAL BENDS HAVING UPWARD RESULTANT THRUSTS ARE BASED ON TEST PRESSURE OF 150 PSIG AND THE WEIGHT OF CONCRETE = 4050 LBS/CU YD. TO COMPUTE VOLUMES FOR DIFFERENT TEST PRESSURES, USE THE FOLLOWING EQUATION: VOLUME = (TEST PRESS./150) × (TABLE VALUE).
5. BEARING AREAS FOR HORIZONTAL BEND THRUST BLOCKS ARE BASED ON TEST PRESSURE OF 150 PSIG AND AN ALLOWABLE SOIL BEARING STRESS OF 2000 LBS/SQ FT. TO COMPUTE BEARING AREAS FOR DIFFERENT TEST PRESSURES AND SOIL BEARING STRESSES, MULTIPLY TABLE VALUES BY THE FACTOR $(13.33)(P'/S_b')$, WHERE: P' =ACTUAL TEST PRESSURE, PSIG
   S_b' =ACTUAL SOIL BEARING PRESSURE, PSF.
6. THRUST BLOCKS FOR VERTICAL BENDS HAVING DOWNWARD RESULTANT THRUSTS SHALL BE THE SAME AS FOR HORIZONTAL BENDS.
7. BEARING AREAS, VOLUMES, AND SPECIAL BLOCKING DETAILS SHOWN ON PLANS TAKE PRECEDENCE OVER THIS STANDARD
8. BEARING AREA OF THRUST BLOCK SHALL NOT BE LESS THAN 1.0 SQ FT.
9. VERTICAL BENDS THAT REQUIRE A THRUST BLOCK VOLUME EXCEEDING 5 CUBIC YARDS REQUIRE SPECIAL BLOCKING DETAILS. SEE PLANS FOR VOLUMES SHOWN TO LEFT OF SOLID LINE IN TABLE.
10. TEST PRESSURES ARE SHOWN IN THE PIPING SCHEDULE.
11. ALLOWABLE SOIL BEARING STRESS IS 2000 LBS/SQ FT.
12. ALL DETAILS TO BE IN ACCORDANCE WITH THE WATER WORKS AND SANITARY SEWER BOARD'S STANDARD SPECIFICATIONS.

THRUST BLOCK NOTES AND DETAILS
NTS

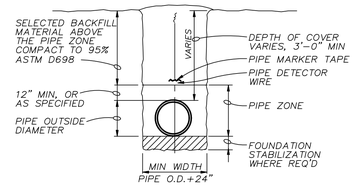

TYPICAL TRENCH
N.T.S.

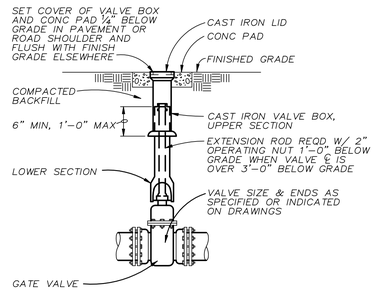

BURIED GATE VALVE BOX SETTING
N.T.S.

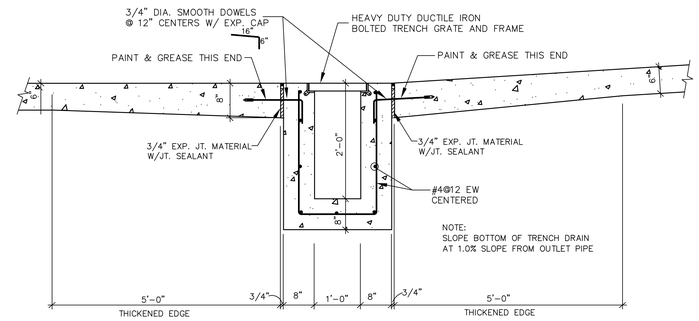

TRENCH DRAIN DETAIL
SCALE: 3/4" = 1'-0"

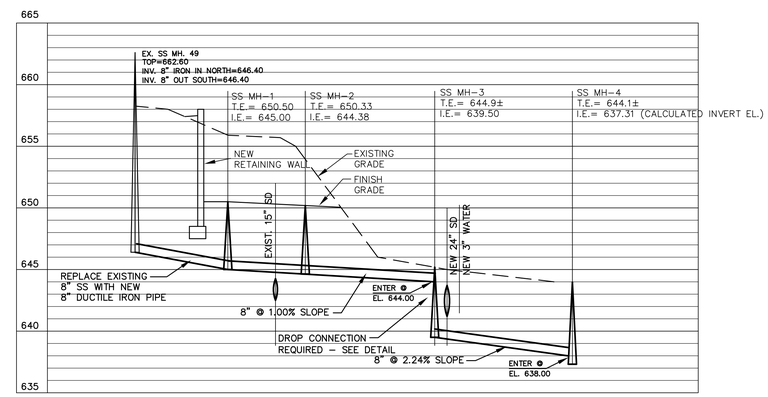

SANITARY SEWER PROFILE – EX. SSMH 49 TO NEW SS MH-4
SCALES HORIZONTAL: 1"=30'
VERTICAL: 1"=5'

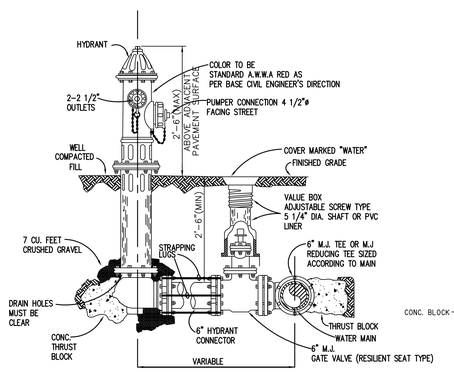

FIRE HYDRANT DETAIL
NTS

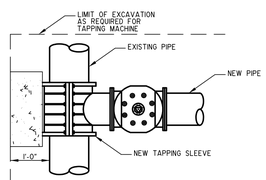

PLAN

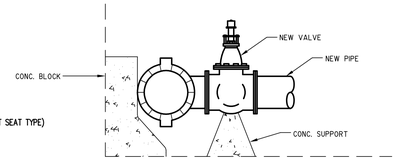

ELEVATION
TAPPING SLEEVE & VALVE INSTALLATION DETAIL
NO SCALE

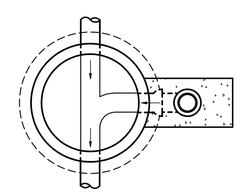

PLAN

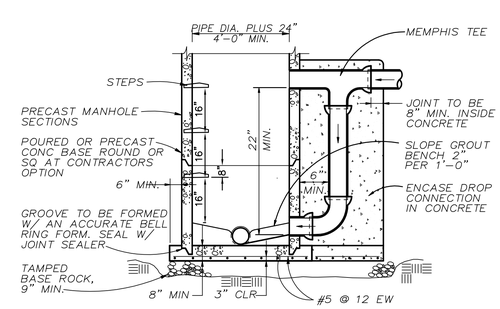

MANHOLE BASE SECTION

DROP MANHOLE DETAIL
NTS

PEC
PROFESSIONAL ENGINEERING CONSULTANTS, LLC
822 South McDonough Street
Montgomery, Alabama 36104
Phone: (334) 262-7307
Fax: (334) 262-7309

SS&L
ARCHITECTURE & INTERIOR DESIGN
1115 South Court Street | Montgomery, AL 36104
Tel. 334. 265.3162 | WWW.SSLARCH.COM

Rev.	Description	Date

Job Number: 12072
Date: JUNE 2024
Drawn By: SBG
Checked By: SBG
Project Title

New Security Building
117th Air Refueling Wing
Birmingham, AL

Sheet Title: Site Details

Sheet Number: C11.1

ALABAMA LICENSED No. 5935 PROFESSIONAL ENGINEER PATRICK A. MOSLEY
6/14/24

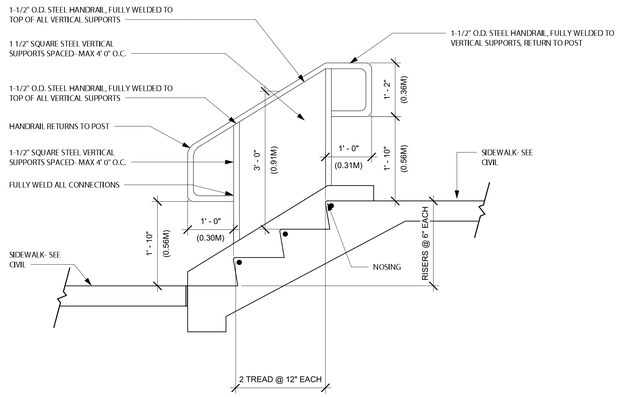

2 / L1.0 Typical Handrail Detail
3/4" = 1'-0"

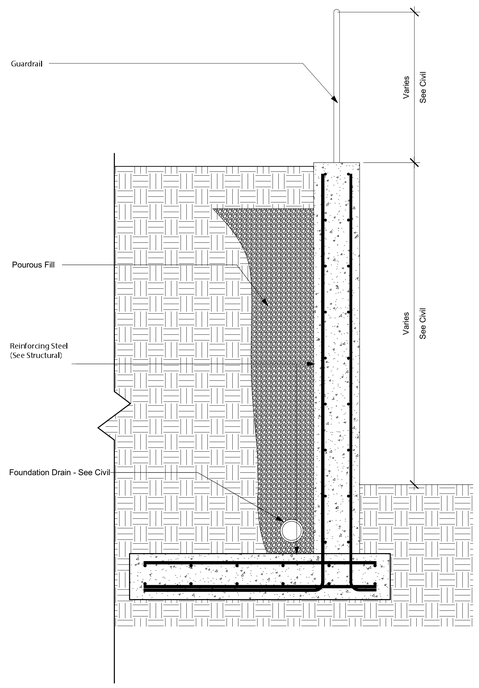

4 / L1.0 Retaining Wall Detail
3/4" = 1'-0"

Landscaping Notes:

1. Plants shall be adjusted on the site to avoid conflicts with underground utilities, surface drainage ways, and exterior lighting standards. Adjustment shall be approved prior to planting.
2. Plant mix for all plantings shall be as detailed in specifications.
3. Plant materials shall be nursery-grown, root-pruned, stock conformed to ANSI Z.60.1 standards of nursery stock.
4. Inspections at place of growth shall not impair the right of rejection at site.
5. Remove all soil and vegetation to a depth of 9" in areas to receive shrubs or ground covers and replace with soil mix.
6. Do not injure root systems of existing trees.
7. Verify exact number and locations of all plantings with architect.
8. If any existing plantings or trees are disturbed, distressed, or die - contractor to replace by matching existing plants.
9. Landscaper note existing solid conditions in geotechnical report in specifications and make site visit to become familiar with existing soil conditions.
10. Landscaper to verify existing grades. Consult with architect before installation of any trees, shrubs, or ground covers.
11. Contractor to sod all areas disturbed by construction activities in addition to that shown in drawings.
12. Provide river rock mulch at all planting areas unless specifically noted otherwise.

Tree Protection Notes:

1. Protect trees and shrubs designated to remain with 6' ht. chain link fence.
2. Erect fencing before starting any other construction activities on site.
3. Protected areas may not be used for storage of materials or equipment, parking or wash-off areas.
4. Do not trench or fill within fenced ares without architect's on-site review and approval.
5. Fences shall remain in place until completion of the project, unless approved by the architect
6. Mow areas within tree protection fencing every other week during the growing season (March - November).

Site Plan Legend
1/8" = 1'-0"

- EXISTING GRASS
- NEW EMERALD ZOYSIA SEED
- NEW CONCRETE CURB & GUTTER - SEE CIVIL
- EXISITNG ASPHALT PAVING - SEE CIVIL
- NEW CONCRETE WALKWAYS - SEE CIVIL
- NEW ASPHALT PAVING - SEE CIVIL

3 / L1.0 Site Access Plan
1" = 80'-0"

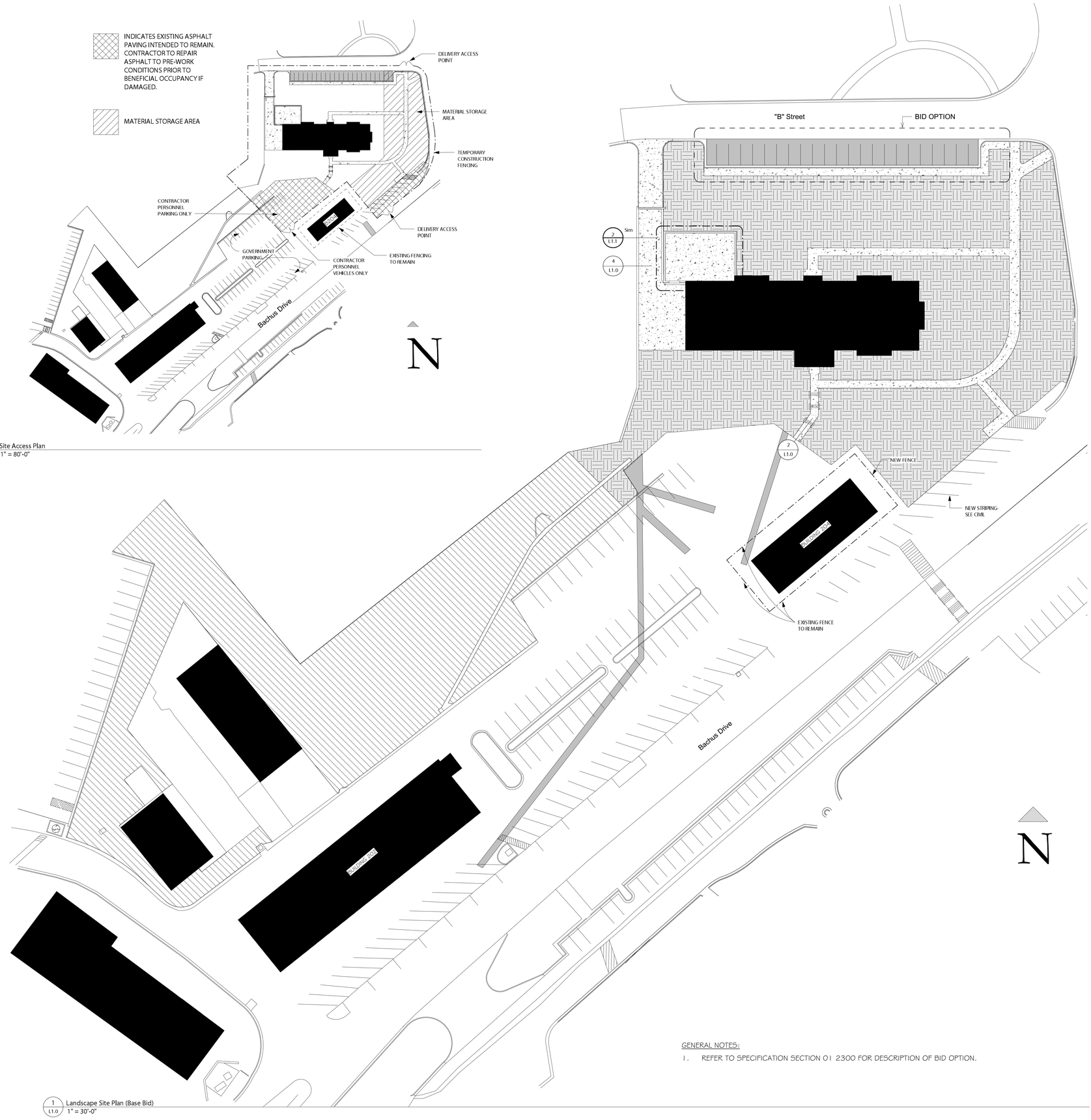

1 / L1.0 Landscape Site Plan (Base Bid)
1" = 30'-0"

GENERAL NOTES:

1. REFER TO SPECIFICATION SECTION 01 2300 FOR DESCRIPTION OF BID OPTION.

S|S&L
ARCHITECTURE & INTERIOR DESIGN
1115 South Colonnade Montgomery, AL 36104
Tel. 334. 263. 5102 | WWW.SSLARCH.COM

Rev.	Description	Date

Job Number
12072

Date
JUNE 2024

Drawn By
JJ, NB, DCD, JBW, DOB

Checked By
DCD

Project Title
New Security Building
117th Air Refueling Wing
Birmingham, AL

Sheet Title
Landscape Site Plan

Sheet Number
L1.0

STATE OF ALABAMA
MONTGOMERY
Wm. S. Seely, Jr. 1944
Gregory A. O'Neal 6043
Wesley S. Carter 6344
ALABAMA
REGISTERED ARCHITECTS

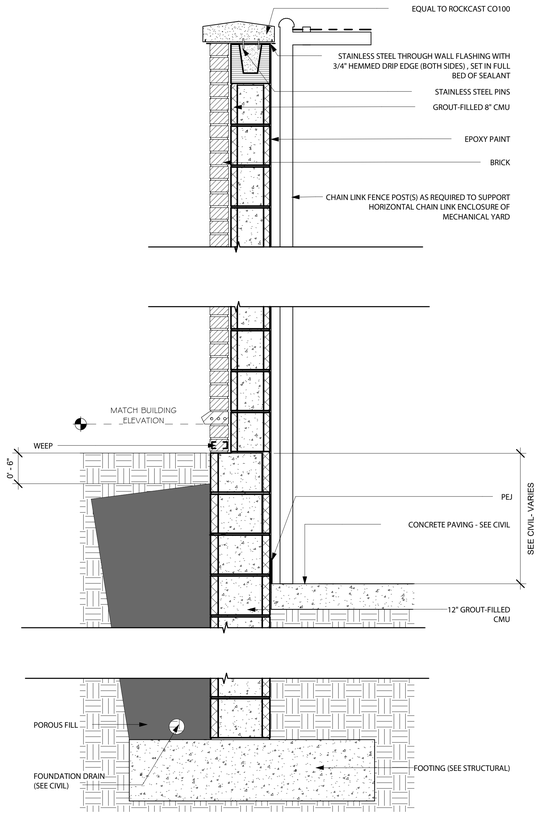

1 L1.1 Mechanical Screen Wall (Bid Option)
1" = 1'-0"

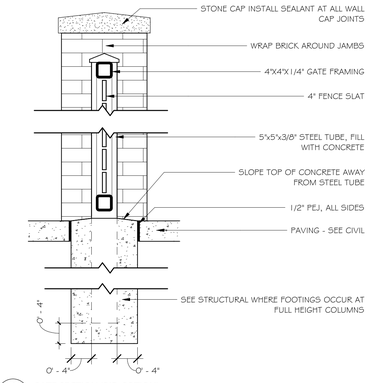

4 L1.1 GATE SECTION (BID OPTION)
1" = 1'-0"

GENERAL NOTES:

1. REFER TO SPECIFICATION SECTION 01 2300 FOR DESCRIPTION OF BID OPTIONS.

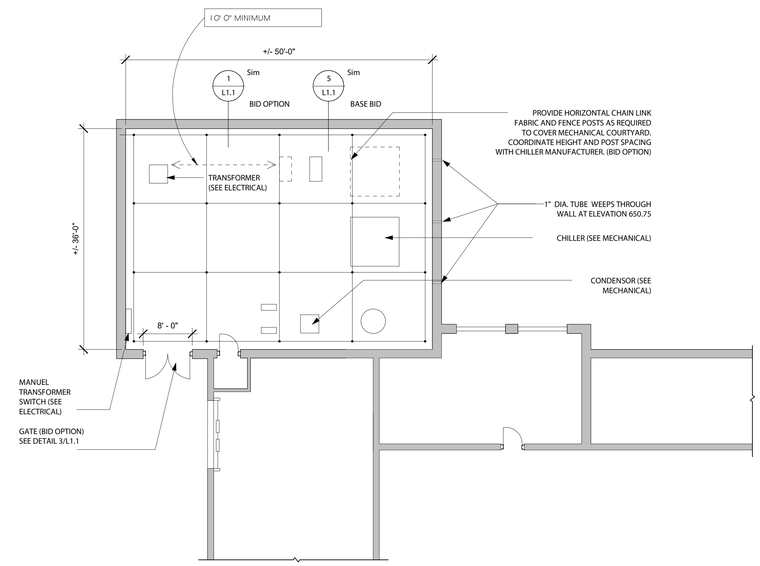

2 L1.1 MECH/ELECTRICAL COURT LAYOUT
1" = 10'-0"

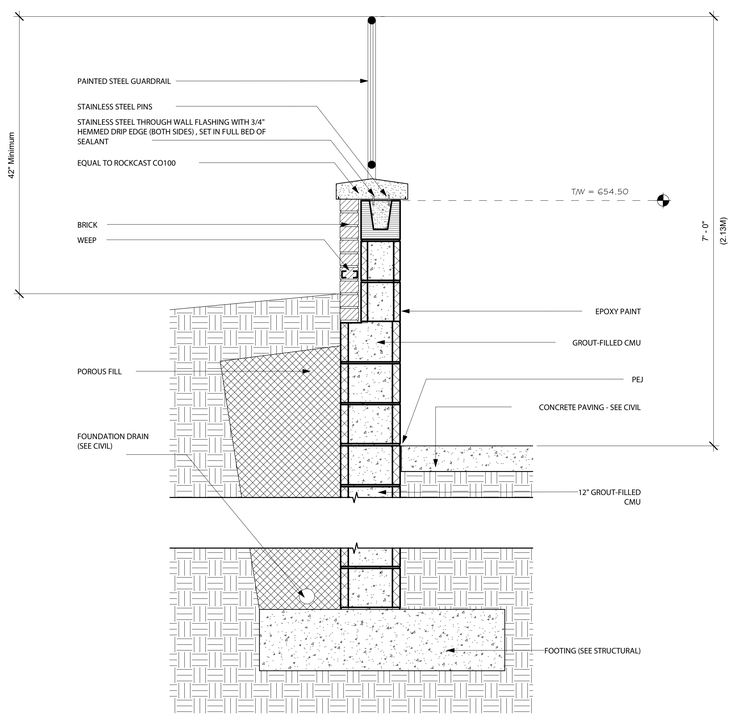

5 L1.1 Mechanical Screen Wall (Base Bid)
1" = 1'-0"

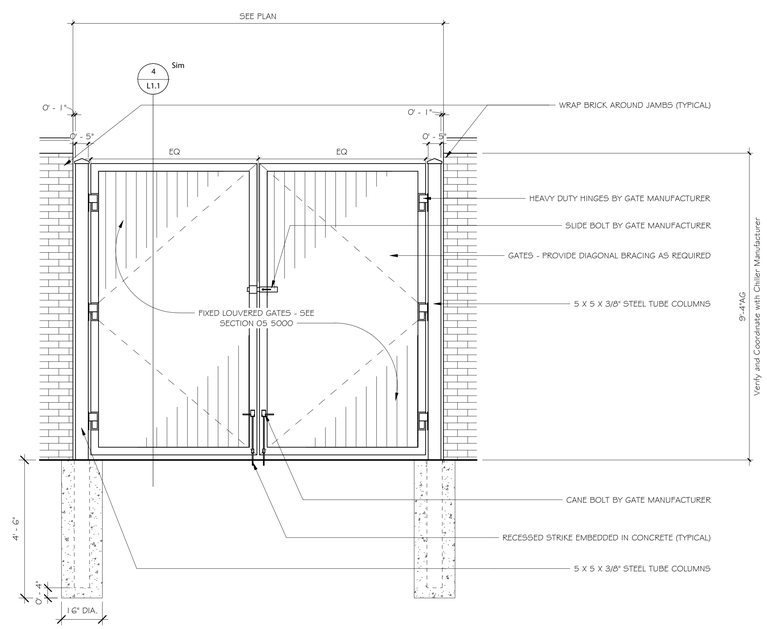

3 L1.1 FENCE GATE (BID OPTION)
1/2" = 1'-0"

S|S&L
ARCHITECTURE & INTERIOR DESIGN
1115 South Colonnade, Montgomery, AL 36104
Tel. 334. 263. 5162 | WWW.SSLARCH.COM

Rev.	Description	Date

Job Number
12072

Date
JUNE 2024

Drawn By
JJ, NB, DCD, JBW, DOB

Checked By
DCD

Project Title

New Security Building
117th Air Refueling Wing
Birmingham, AL

Sheet Title
Landscape Details

Sheet Number
L1.1

STATE OF ALABAMA
MONTGOMERY
Jim H. Seay, Jr.
1844
Gregory A. O'Neal
4043
Wesley S. Clarke
4244
ALABAMA
REGISTERED ARCHITECTS

LIFE SAFETY CALCULATIONS:

PLUMBING FIXTURE SCHEDULE - OFFICE AREA							
Occupancy Type	Male Occupancy	Female Occupancy	Plumbing Fixtures Calculations				Drinking Fountains
			Water Closets		Lavatories		
			Men	Women	Men's	Women's	
Business	72	18	3.60	0.90	3.60	0.90	1.20
Grand total: 11							

PLUMBING FIXTURE CALCULATIONS ARE BASED UPON UTA OCCUPANCY OF 89.

SYMBOLS LEGEND:

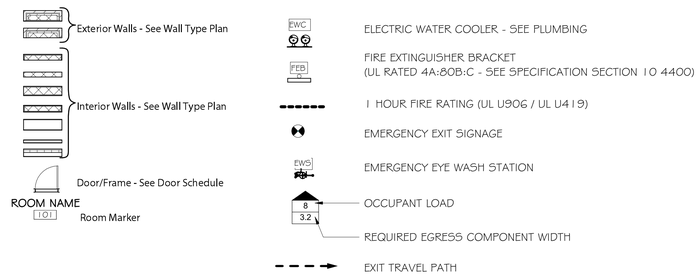

OCCUPANCY TYPE LEGEND:

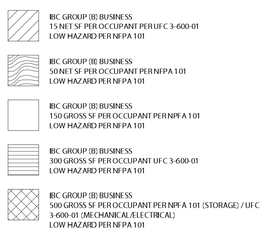

LIFE SAFETY REQUIREMENTS OUTLINE

APPLICABLE CODES:
- BUILDING CODE.....*UFC 1-200-01 / 2021 INTERNATIONAL BUILDING CODE*
- STRUCTURAL CODE.....*UFC 3-301-01 / IBC 2021*
- PLUMBING CODE.....*UFC 3-420-01 / IBC 2021*
- MECHANICAL CODE.....*UFC 3-401-01 / IBC 2021*
- ELECTRICAL CODE.....*UFC 3-501-01 / IBC 2021 / NFPA 70*
- ENERGY CODE.....*UFC 1-200-02*
- ACCESSIBILITY CODE.....*ARCHITECTURAL BARRIERS ACT STANDARDS*
- LIFE SAFETY CODE.....*UFC 3-600-01 / NFPA 101*
- ANTI-TERRORIST FORCE PROTECTION.....*UFC 4-010-01(DECEMBER 2018)*

IBC CHAPTER 3 AND UFC 3-600-01 OCCUPANCY & USE:
NFPA 101 CHAPTER 6:
- SEE LEGEND ON LIFE SAFETY PLAN

IBC CHAPTER 4 - SPECIAL DETAILED REQUIREMENTS:
- *NOT APPLICABLE*

IBC CHAPTER 5 - GENERAL BUILDING HEIGHTS & AREAS:
- 9,937 SF (BASE BID AND BID OPTION) GROSS BUILDING AREA
- CONSTRUCTION TYPE = *II-B, SPRINKLED*
- ALLOWABLE BUILDING HEIGHT *(PER TABLE 504.3)*
  TYPE B - 75 FEET ABOVE GRADE PLANE
- ALLOWABLE NUMBER OF STORIES ABOVE GRADE PLANE *(PER TABLE 504.4)*
  TYPE B - 4 STORIES ABOVE GRADE PLANE
- TABULAR BUILDING AREA *(PER TABLE 506.2)*

OCCUPANCIES	ALLOWABLE AREA
B	92,000 SF

- ALLOWABLE BUILDING AREA *(PER SECTION 506.2)*
  92,000 + (23,000*.75)= 109,250 SF (B)
- FIRE SEPARATION REQUIREMENTS *PER TABLE 508.4*

OCCUPANCIES	RATING (HR)
B	0

- INCIDENTAL USE AREAS *(PER TABLE 509)*
  NOT APPLICABLE

IBC CHAPTER 6 TYPES OF CONSTRUCTION:
- CONSTRUCTION TYPE: *II-B*
- FIRE RATINGS *(PER TABLE 601)* AS FOLLOWS (EXCEPT WHERE NOTED OTHERWISE)
  - PRIMARY STRUCTURAL FRAME..... *0 HOUR*
  - BEARING WALLS (INTERIOR & EXTERIOR)..... *0 HOUR*
  - NON-BEARING WALLS AND PARITIONS (INTERIOR).....*0 HOUR*
  - FLOOR CONSTRUCTION AND SECONDARY MEMBERS....*0 HOUR*
  - ROOF CONSTRUCTION AND SECONDARY MEMBERS.....*0 HOUR*

IBC CHAPTER 7 - FIRE AND SMOKE PROTECTION FEATURES:
- MAXIMUM EXTERIOR WALL OPENINGS *(PER TABLE 705.8)*

FIRE SEPARATION:	DEGREE OF OPENING PROTECTION:	ALLOWABLE AREA:
GREATER THAN 30 FT	*UNPROTECTED, SPRINKLERED , (UP, S)*	*NO LIMIT*

IBC CHAPTER 8, UFC 3-600-01, NFPA 101 - INTERIOR FINISHES:
- FINISH MATERIAL RATING REQUIREMENTS *(PER NFPA 101)*
  - BUSINESS *(CHAPTER 38)*
    - EXITS AND EXIT ACCESS CORRIDORS
      - INTERIOR WALL AND CEILING FINISH - *CLASS A OR B (38.3.3.2.1)*
      - INTERIOR FLOOR FINISH - *CLASS I OR CLASS II (38.3.3.2)*
    - AREAS OTHER THAN EXITS AND EXIT ACCESS CORRIDORS
      - INTERIOR WALL AND CEILING FINISH - *CLASS A, B, OR C (38.3.3.2.2)*
      - INTERIOR FLOOR FINISH - *COMPLY WITH SECTION 10.2.7*

UFC 3-600-01(REPLACES IBC CHAPTER 9) - FIRE PROTECTION SYSTEMS:
- *SECTION 9-1 - EMERGENCY VEHICLE ACCESS*
  1. FACILITY *REQUIRES* ONE MEANS OF ALL-WEATHER EMERGENCY VEHICLE GROUND ACCESS IN ACCORDANCE WITH *9-1.1*
  2. FACILITY *IS NOT* REQUIRED AERIAL APPARATUS ACCESS IN ACCORDANCE WITH *9-1.2*
- *SECTION 9-2 - FIRE FLOW FOR FACILITIES*
  1. FIRE FLOW FOR SPRINKLER SYSTEM IS PROVIDED IN ACCORDANCE WITH *9-2.1*
- *SECTION 9-3 - SERVICE MAINS AND LATERALS*
  1. FIRE HYDRANTS ARE PROVIDED IN ACCORDANCE WITH *9-3.5.8*
     A. HYDRANTS ARE SPACED AT *300 FT* MAXIMUM
- *SECTION 9-5 - FIRE PUMPS*
  1. A FIRE PUMP *IS NOT* REQUIRED TO MEET FIRE PROTECTION DEMAND.
- *SECTION 9-7 - AUTOMATIC SPRINKLER SYSTEMS*
  1. PER *9-7.2.1*, AN AUTOMATIC SPRINKLER SYSTEM *IS* PROVIDED
- *SECTION 9-10 - STANDPIPE SYSTEMS*
  1. PER *9-10*, A STANDPIPE SYSTEM *IS NOT* REQUIRED
- *SECTION 9-17 - PORTABLE FIRE EXTINGUISHERS*
  1. PER *9-17.1*, PORTABLE FIRE EXTINGUISHERS *ARE NOT* REQUIRED
  2. FIRE EXTINGUISHERS ARE PROVIDED, SEE PLANS FOR LOCATIONS

NFPA 101 CHAPTER 7 (REPLACES IBC CHAPTER 10) - MEANS OF EGRESS:
- OCCUPANCY LOAD *(PER TABLE 7.3.1.2, AS MODIFIED BY UFC 3-600-01)*
  SEE OCCUPANCY LEGEND
- EGRESS CAPACITY SIZING *(PER TABLE 7.3.3.1)*
  0.2 INCHES PER OCCUPANT *(PER TABLE 7.3.3.1)*
  36 INCHES MIN EGRESS WIDTH *(PER SECTION 7.3.4.1)*
  SEE LIFE SAFETY PLAN FOR INDIVIDUAL ROOM EGRESS ANALYSIS
- NUMBER OF MEANS OF EGRESS *(PER SECTION 7.4.1)*
  TOTAL NUMBER OF EXITS REQUIRED
  BUSINESS OCCUPANCY *(CHAPTER 38)*
  GROUND FLOOR - 2 EXITS REQUIRED
- COMMON PATH OF EGRESS TRAVEL DISTANCE
  BUSINESS OCCUPANCY *(CHAPTER 38)*
  100 FT PER *38.2.5.3.1*
- EXIT ACCESS TRAVEL DISTANCE
  BUSINESS OCCUPANCY *(CHAPTER 38)*
  300 FT PER *38.2.6.3*
  SEE LIFE SAFTEY PLAN FOR EXIT ACCESS TRAVEL DISTANCE
- CORRIDORS
  OCCUPANCY TYPE *(B)* REQUIRES:
  NO FIRE RATING REQUIRED FOR CORRIDOR WALLS
  SEE LIFE SAFTEY PLAN FOR LOCATIONS OF RATED CORRIDORS

  MINIMUM CORRIDOR WIDTH
  BUSINESS OCCUPANCY *(CHAPTER 38)*
  44 INCHES PER *38.2.3.2*
  DEAD END CORRIDORS
  BUSINESS OCCUPANCY *(CHAPTER 38)*
  MAXIMUM OF *50* FEET PER *38.2.5.2.1*

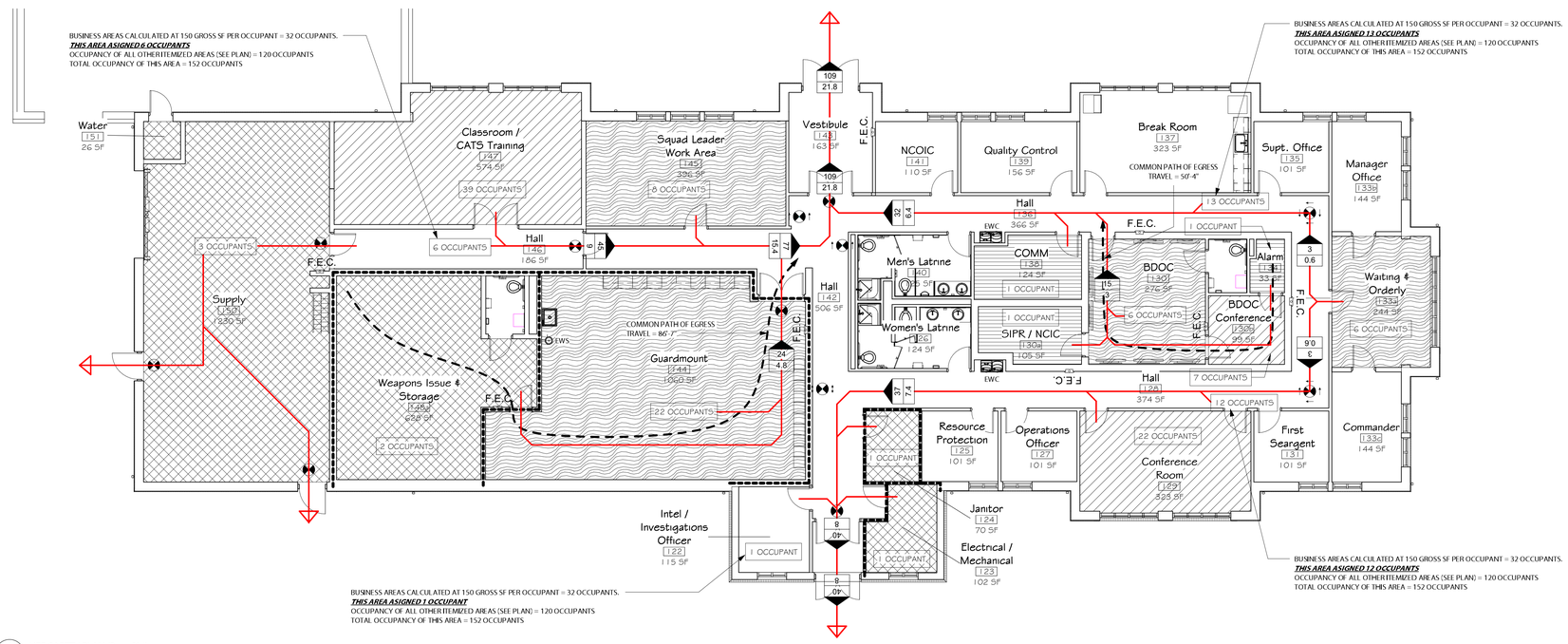

1 / LS1.0 LIFE SAFETY PLAN (Base Bid)
1/8" = 1'-0"

S|S&L
ARCHITECTURE & INTERIOR DESIGN
1115 Second Avenue North, Birmingham, AL 35203
Tel. 334.263.5162 | WWW.SSLARCH.COM

Rev.	Description	Date

Job Number: 12072
Date: JUNE 2024
Drawn By: JJ, NB, DCD, JBW, DOB
Checked By: DCD
Project Title

New Security Building
117th Air Refueling Wing
Birmingham, AL

Sheet Title: Life Safety Plan, Criteria, and Calculations

Sheet Number: LS1.0

STATE OF ALABAMA
MONTGOMERY
This 15, Sept., A. 1966
Gregory A. O'Neal
6043
Wesley S. Cramer
6264
ALABAMA
REGISTERED ARCHITECTS

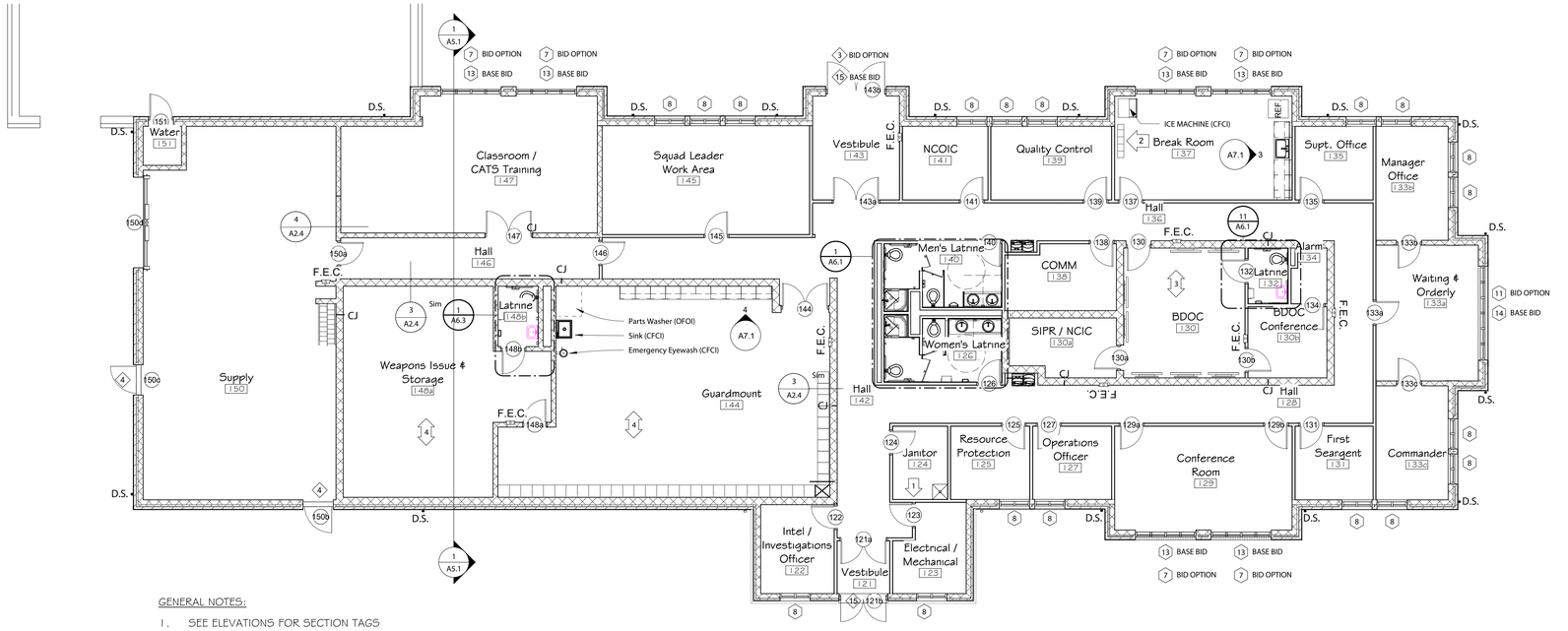

GENERAL NOTES:

1. SEE ELEVATIONS FOR SECTION TAGS

1 / A2.1 First Floor Plan (Base Bid)
1/8" = 1'-0"

0' 4' 8' 16' 32'

1. PROVIDE MOP HOLDER/ SHELF IN THIS SPACE. REFER TO SPECIFICATION SECTION 10 2800.
2. CONTRACTOR FURNISHED RECYCLING RECEPTACLES. SEE SPECIFICATION SECTION 10 8500
3. SEAL CMU WALL TO METAL DECK IN ROOMS 130, 130A, 130B, 132, AND 134. SEE DETAIL 4/A2.4A.
4. SEAL CMU WALL TO METAL DECK AND INSTALL GYPSUM BOARD/ METAL STUD FRAMING EXTENDING TO ROOF DECK ABOVE. SEE 3/A2.4.

See Structural Detail for Additional Requirements

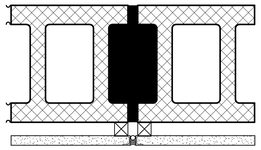

2 / A2.1 Interior Masonry Control Joint Detail
3" = 1'-0"

Legend:

- Exterior Walls - See Wall Type Plan
- Interior Walls - See Wall Type Plan
- Door/Frame - See Door Schedule
- Elevation Marker (1 Ref / A101)
- Detail Callout/ Section Tag (SIM / 1 / A101)
- Window/Curtain Wall/Storefront Tag - See Curtain Wall & Storefront Schedules
- Door Tag - See Door Schedule
- D.S. Downspout - See Typical Downspout Boot Detail & Civil Drawings
- CJ Interior CMU Control Joint - See 2A2.1. See Elevations for Locations of Exterior Control Joints
- ROOM NAME / 101 Room Marker

S|S&L
ARCHITECTURE & INTERIOR DESIGN
1115 South Court Montgomery, AL 36104
Tel 334.263.5162 | WWW.SSLARCH.COM

Rev.	Description	Date

Job Number
12072

Date
JUNE 2024

Drawn By
JJ, NB, DCD, JBW, DOB

Checked By
DCD

Project Title

New Security Building
117th Air Refueling Wing
Birmingham, AL

Sheet Title
First Floor Plan

Sheet Number
A2.1

STATE OF ALABAMA
MONTGOMERY
Jim H. Seay, Jr.
1844
Gregory A. O'Neal
8127
Walter E. Conner
1041
ALABAMA
REGISTERED ARCHITECTS

SOFT METRIC DIMENSIONS ARE PROVIDED FOR THE OWNER'S INFORMATION & USE ONLY. FOR THE PURPOSES OF CONSTRUCTION, THE CONTRACTOR SHALL USE THE LISTED ENGLISH DIMENSION. IF DISCREPANCIES EXIST WITH THE METRIC & ENGLISH UNIT'S, THE ENGLISH UNITS SHALL SUPERCEDE. TYPICAL ON ALL DRAWINGS.

ALL INTERIOR PARTITION DIMENSIONS ARE TAKEN TO THE CENTER LINE OF WALL UNLESS NOTED OTHERWISE. ALL EXTERIOR WALL DIMENSIONS ARE TAKE TO THE OUTSIDE (EXTERIOR) FACE OF THE CONCRETE MASONRY UNIT UNLESS NOTED OTHERWISE.

GENERAL CONTRACTOR SHALL FIELD VERIFY AND COORDINATE ALL DIMENSIONS. NOTIFY CONTRACTING OFFICER OF ANY DISCREPANCIES NOTED PRIOR TO PROCEEDING.

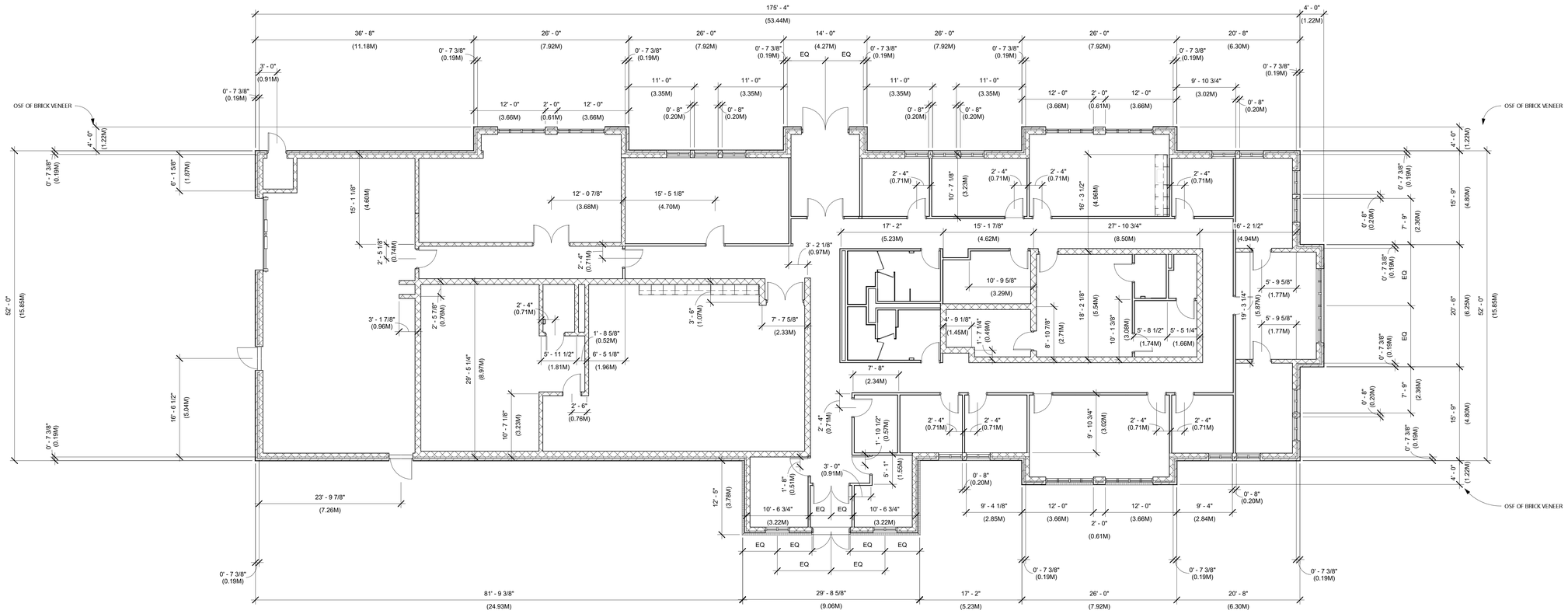

1 A2.2 Dimensioned Floor Plan
1/8" = 1'-0"

S|S&L
ARCHITECTURE & INTERIOR DESIGN
1115 South Colonnade, Birmingham, AL 35204
Tel. 334.263.5102 | WWW.SSLARCH.COM

Rev.	Description	Date

Job Number
12072

Date
JUNE 2024

Drawn By
JJ, NB, DCD, JBW, DOB

Checked By
DCD

Project Title

New Security Building

117th Air Refueling Wing
Birmingham, AL

Sheet Title
Dimensioned Floor Plan

Sheet Number
A2.2

STATE OF ALABAMA
MONTGOMERY
Jim H. Sears, Jr.
#1013
Gregory A. O'Neal
#243
Wesley S. Cannon
#244
ALABAMA
REGISTERED ARCHITECTS

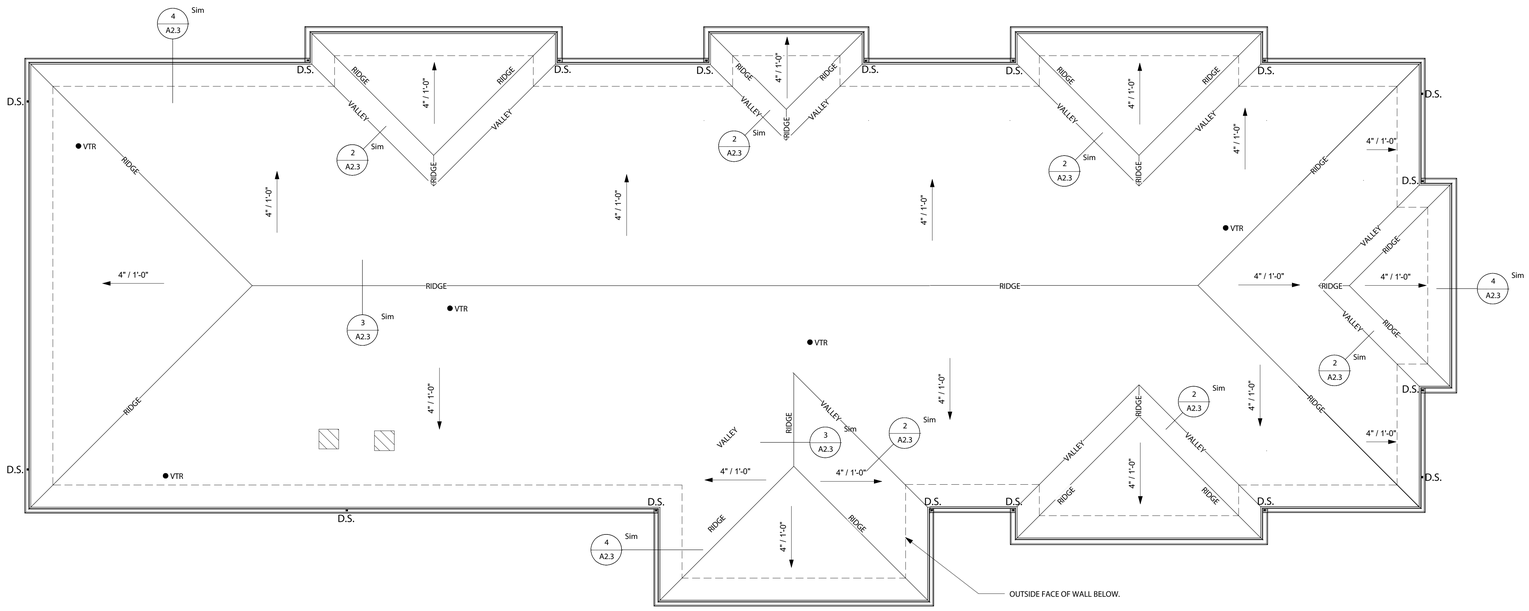

1 A2.3 Roof Plan
1/8" = 1'-0"

0 4' 8' 16' 32'

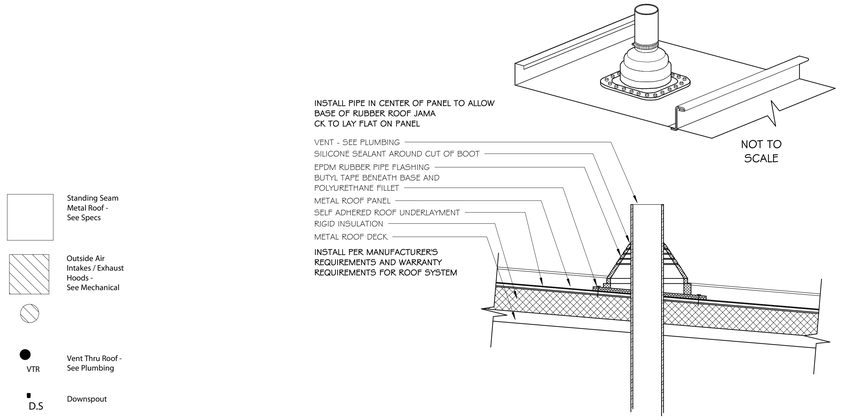

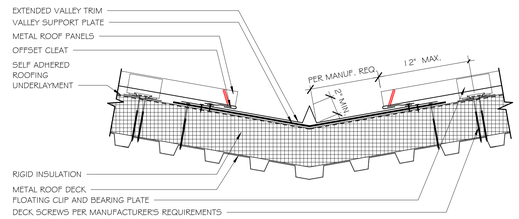

Standing Seam Metal Roof - See Specs

Outside Air Intakes / Exhaust Hoods - See Mechanical

VTR Vent Thru Roof - See Plumbing

D.S. Downspout

Roof Plan Legend
1/4" = 1'-0"

6 A2.3 Plumbing Vent Detail
1 1/2" = 1'-0"

2 A2.3 Valley Detail
1 1/2" = 1'-0"

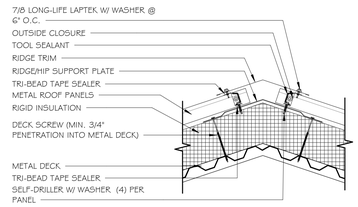

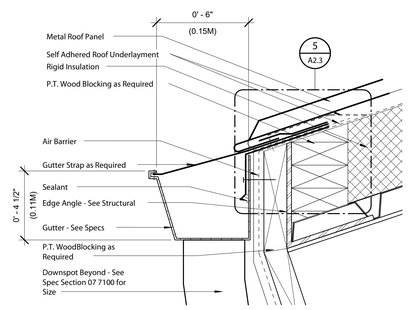

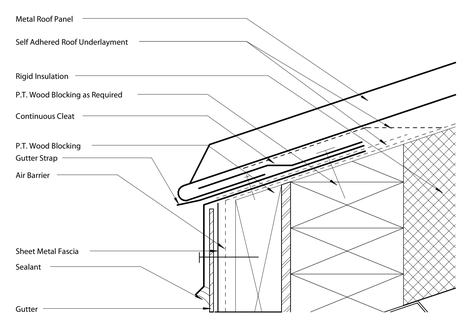

3 A2.3 Ridge Detail
1 1/2" = 1'-0"

4 A2.3 gutter detail
3" = 1'-0"

5 A2.3 gutter flashing detail
6" = 1'-0"

S|S&L
ARCHITECTURE & INTERIOR DESIGN
1115 South Court St. Montgomery, AL 36104
Tel 334.263.5162 | WWW.SSLARCH.COM

Rev.	Description	Date

Job Number
12072

Date
JUNE 2024

Drawn By
JJ, NB, DCD, JBW, DOB

Checked By
DCD

Project Title

New Security Building

117th Air Refueling Wing
Birmingham, AL

Sheet Title
Roof Plan (Base Bid)

Sheet Number
A2.3

STATE OF ALABAMA
MONTGOMERY
Jim A. Sorrie, Jr. 1966
Gregory A. O'Neal 4045
Wesley S. Carter 4244
ALABAMA
REGISTERED ARCHITECTS

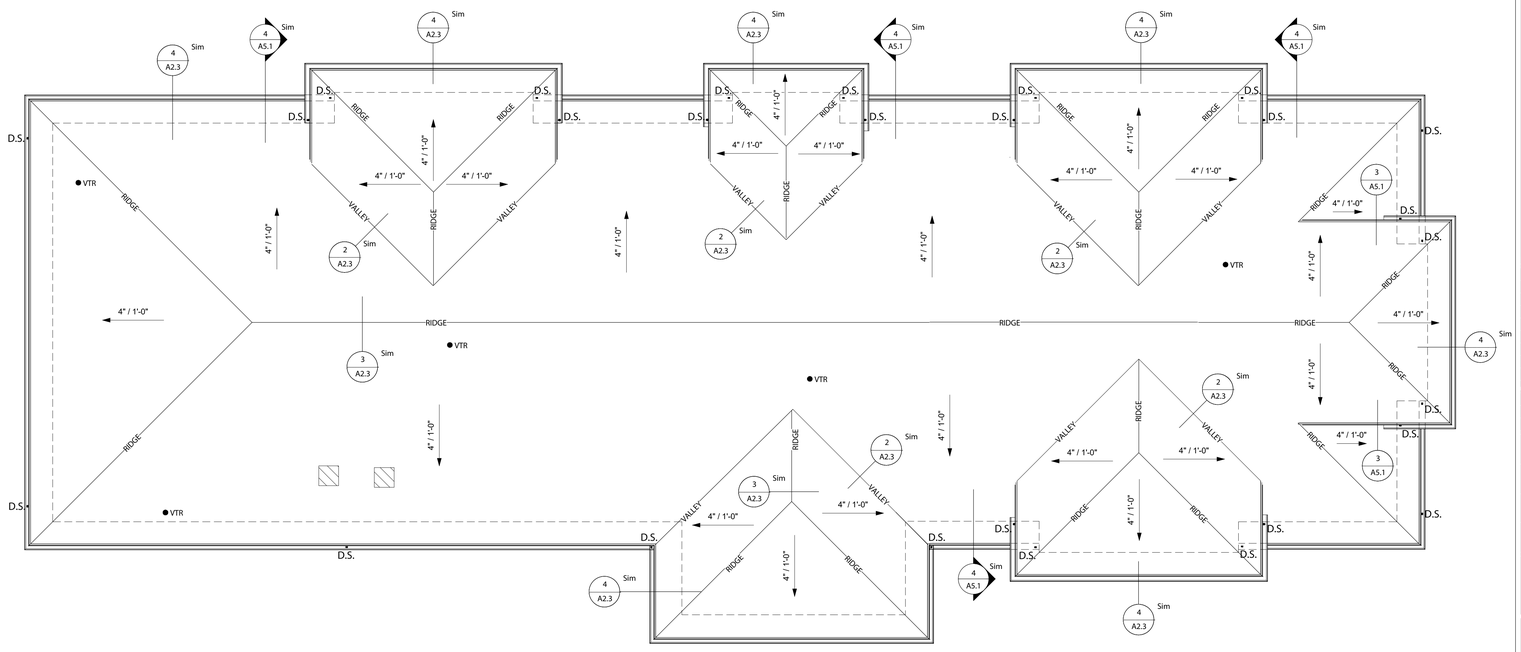

1 / A2.3A Roof Plan(Bid Option)
1/8" = 1'-0"

GENERAL NOTES:

1. REFER TO SPECIFICATION SECTION 01 2300 FOR DESCRIPTION OF BID OPTION.

Standing Seam Metal Roof - See Specs

Outside Air Intakes / Exhaust Hoods - See Mechanical

VTR — Vent Thru Roof - See Plumbing

D.S — Downspout

Roof Plan Legend
1/4" = 1'-0"

S|S&L
ARCHITECTURE & INTERIOR DESIGN
1115 South Court St. Montgomery, AL 36104
Tel. 334. 263. 5102 | WWW.SSLARCH.COM

Rev.	Description	Date

Job Number
12072

Date
JUNE 2024

Drawn By
JJ, NB, DCD, JBW, DOB

Checked By
DCD

Project Title

New Security Building
117th Air Refueling Wing
Birmingham, AL

Sheet Title
Roof Plan (Bid Option)

Sheet Number
A2.3A

STATE OF ALABAMA
MONTGOMERY
Jim S. Sorg, Jr.
Tim
Gregory A. O'Neal
DCD
Wesley J. Carter
JBW
ALABAMA
REGISTERED ARCHITECTS

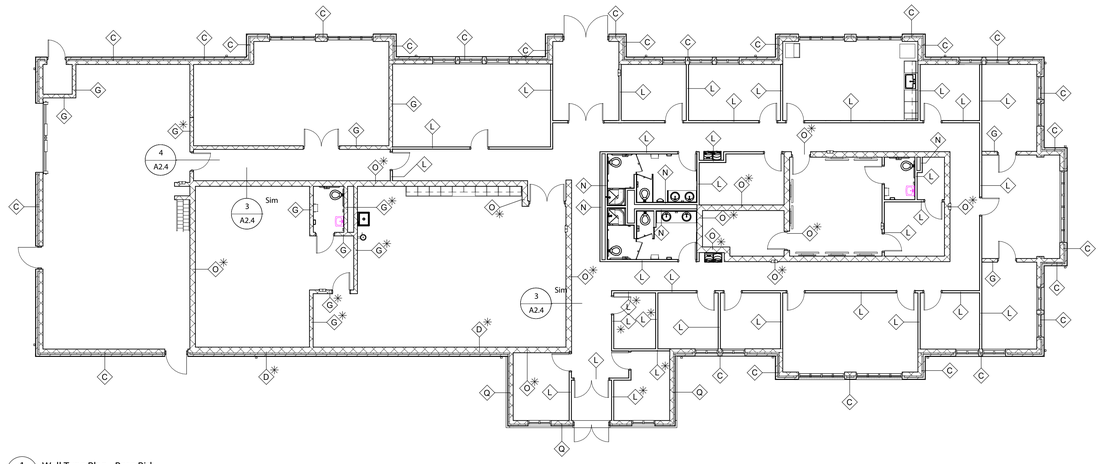

1 A2.4 Wall Type Plan - Base Bid
3/32" = 1'-0"

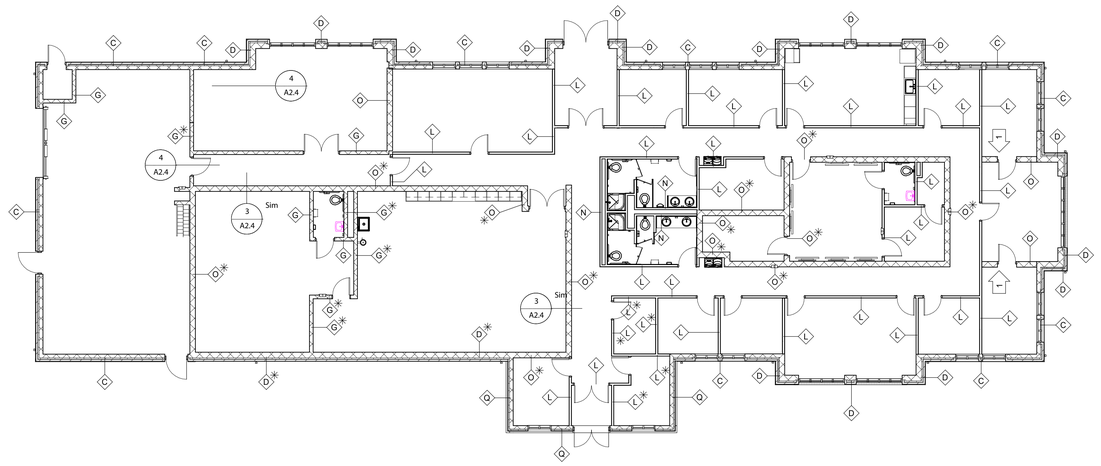

2 A2.4 Wall Type Plan - Bid Option
3/32" = 1'-0"

Wall Schedule			
Type Mark	Description	Comments	Minimum NIC Rating
C	8" CMU, Airspace, Brick Veneer		
D	12" CMU, Airspace, Brick Veneer	See Finish Schedule for Locations where this wall type is scheduled to receive wall tile.	
G	8" CMU		45
L	5/8" GWB, 3-5/8" Metal Stud, 5/8" GWB		45
N	5/8" GWB, 3-5/8" Metal Stud		
O	12" CMU		45
Q	Upper Wall: 8" CMU, Metal Panel; Lower Wall: 8" CMU, Airspace, Brick Veneer.		

GENERAL NOTES:

1. ALL INTERIOR WALLS TO EXTEND TO 12'-0" ABOVE FINISHED FLOOR UNLESS NOTED OTHERWISE.

1 REFER TO STRUCTURAL FOR HEIGHT OF CMU INTERIOR WALL.

✳ EXTEND WALLS TO MECHANICAL EQUIPMENT FLOOR, ROOF DECK, OR CONCRETE SECURITY CEILING AND SEAL TIGHT. REFER TO LIFE SAFETY PLAN FOR LOCATIONS OF FIRE RATED WALLS.

SEE LS-1 FOR LOCATIONS OF FIRE RATED WALL ASSEMBLIES NOT SHOWN ON THIS SHEET

Wall Type Legend:

- Wall Type C
- Wall Type D
- Wall Type G
- Wall Type L
- Wall Type N
- Wall Type O
- Wall Type Q

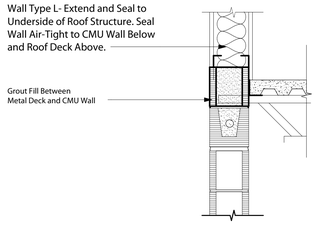

3 A2.4 Gypsum Wallboard Detail
1" = 1'-0"

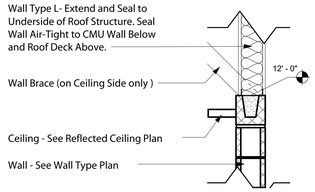

4 A2.4 Wall Transition Detail
3/4" = 1'-0"

S|S&L
ARCHITECTURE & INTERIOR DESIGN
1135 South Court St. Montgomery, AL 36104
Tel 334.263.5162 | WWW.SSLARCH.COM

Rev.	Description	Date

Job Number
12072

Date
JUNE 2024

Drawn By
JJ, NB, DCD, JBW, DOB

Checked By
DCD

Project Title

New Security Building
117th Air Refueling Wing
Birmingham, AL

Sheet Title
Wall Type Plan

Sheet Number
A2.4

STATE OF ALABAMA
MONTGOMERY
Jim H. Seay, Jr.
1844
Gregory A. O'Neal
8121
Walter L. Dunn
6041
ALABAMA
REGISTERED ARCHITECTS

FINISH SCHEDULE - BASE BID & BID OPTION #4

NO.	ROOM NAME	FLOOR FINISH: BASE BID FLOOR FINISH	FLOOR FINISH: BID OPTION FLOOR FINISH	BASE FINISH: BASE BID	BASE FINISH: BID OPTION	WALL FINISH: BASE BID NORTH	WALL FINISH: BASE BID EAST	WALL FINISH: BASE BID SOUTH	WALL FINISH: BASE BID WEST	WALL FINISH: BID OPTION NORTH	WALL FINISH: BID OPTION EAST	WALL FINISH: BID OPTION SOUTH	WALL FINISH: BID OPTION WEST	CEILING FINISH	DOORS: FINISH	DOORS: CASING & TRIM	WINDOW: SHADE	WINDOW: SILL	MILLWORK: CASEWORK UPPER	MILLWORK: CASEWORK LOWER	MILLWORK: COUNTER TOP	TOILET PARTITIONS	NOTES
Level 1																							
121	Vestibule	VCT 1, WM 1	VCT 1, WM 1	RUBBER	RUBBER	PNT 1	PNT 1	PNT 1	PNT 1	PNT 1	PNT 1	PNT 1	PNT 1	ACT 1	ST 1	PNT 2							
122	Intel / Investigations Officer	VCT 1	CPT 1	RUBBER	RUBBER	PNT 1	PNT 1	PNT 1	PNT 1	PNT 1	PNT 1	PNT 1	PNT 1	ACT 1	ST 1	PNT 2	WS 1						
123	Electrical / Mechanical	SC	SC	RUBBER	RUBBER	PNT 1	PNT 1	PNT 1	PNT 1	PNT 1	PNT 1	PNT 1	PNT 1	Exposed / PNT 4	ST 1	PNT 2							
124	Janitor	SC	SC	RUBBER	RUBBER	FRP / PNT 1	FRP / PNT 1	FRP / PNT 1	FRP / PNT 1	FRP / PNT 1	FRP / PNT 1	FRP / PNT 1	FRP / PNT 1	ACT 2	ST 1	PNT 2							PROVIDE FRP PANELS TO 8'-0" AFF AND PNT-1 ABOVE ON WALLS
125	Resource Protection	VCT 1	CPT 1	RUBBER	RUBBER	PNT 1	PNT 1	PNT 1	PNT 1	PNT 1	PNT 1	PNT 1	PNT 1	ACT 1	ST 1	PNT 2	WS 1						
126	Women's Latrine	HT-2	HT-2	HT-2	HT-2	HT-1, HT-2, PNT 3	HT-1, HT-2, PNT 3	HT-1, HT-2, PNT 3	HT-1, HT-2, PNT 3	HT 1	HT 1	HT 1	HT 1	ACT 2	ST 1	PNT 2			PL1	SS1	STAINLESS		REFER TO ELEVATIONS FOR EXTENT OF TILE INCLUDED IN BASE BID
127	Operations Officer	VCT 1	CPT 1	RUBBER	RUBBER	PNT 1	PNT 1	PNT 1	PNT 1	PNT 1	PNT 1	PNT 1	PNT 1	ACT 1	ST 1	PNT 2	WS 1						
128	Hall	VCT 1	VCT 1	RUBBER	RUBBER	PNT 1	PNT 1	PNT 1	PNT 1	PNT 1	PNT 1	PNT 1	PNT 1	ACT 1	ST 1	PNT 2							
129	Conference Room	VCT 1	CPT 1	RUBBER	RUBBER	PNT 1	PNT 1	PNT 1	PNT 1	PNT 1	PNT 1	PNT 1	PNT 1	ACT 1	ST 1	PNT 2	WS 1						
130	BDOC	VCT 1	CPT 1	RUBBER	RUBBER	PNT 1	PNT 1	PNT 1	PNT 1	PNT 1	PNT 1	PNT 1	PNT 1	ACT 1	ST 1	PNT 2							
130a	SIPR / NCIC	VCT 1	VCT 1	RUBBER	RUBBER	PNT 1	PNT 1	PNT 1	PNT 1	PNT 1	PNT 1	PNT 1	PNT 1	ACT 1	ST 1	PNT 2							
130b	BDOC Conference	VCT 1	CPT 1	RUBBER	RUBBER	PNT 1	PNT 1	PNT 1	PNT 1	PNT 1	PNT 1	PNT 1	PNT 1	ACT 1	ST 1	PNT 2							
131	First Seargent	VCT 1	CPT 1	RUBBER	RUBBER	PNT 1	PNT 1	PNT 1	PNT 1	PNT 1	PNT 1	PNT 1	PNT 1	ACT 1	ST 1	PNT 2	WS 1						
132	Latrine	HT-2	HT-2	HT-2	HT-2	HT-1, HT-2, PNT 3	HT-1, HT-2, PNT 3	HT-1, HT-2, PNT 3	HT-1, HT-2, PNT 3	HT 1	HT 1	HT 1	HT 1	ACT 2	ST 1	PNT 2							REFER TO ELEVATIONS FOR EXTENT OF TILE INCLUDED IN BASE BID
133a	Waiting & Orderly	VCT 1	CPT 1	RUBBER	RUBBER	PNT 1	PNT 1	PNT 1	PNT 1	PNT 1	PNT 1	PNT 1	PNT 1	ACT 1	ST 1	PNT 2	WS 1						
133b	Manager Office	VCT 1	CPT 1	RUBBER	RUBBER	PNT 1	PNT 1	PNT 1	PNT 1	PNT 1	PNT 1	PNT 1	PNT 1	ACT 1	ST 1	PNT 2	WS 1						
133c	Commander	VCT 1	CPT 1	RUBBER	RUBBER	PNT 1	PNT 1	PNT 1	PNT 1	PNT 1	PNT 1	PNT 1	PNT 1	ACT 1	ST 1	PNT 2	WS 1						
134	Alarm	VCT 1	VCT 1	RUBBER	RUBBER	PNT 1	PNT 1	PNT 1	PNT 1	PNT 1	PNT 1	PNT 1	PNT 1	ACT 1	ST 1	PNT 2							
135	Supt. Office	VCT 1	CPT 1	RUBBER	RUBBER	PNT 1	PNT 1	PNT 1	PNT 1	PNT 1	PNT 1	PNT 1	PNT 1	ACT 1	ST 1	PNT 2	WS 1						
136	Hall	VCT 1	VCT 1	RUBBER	RUBBER	PNT 1	PNT 1	PNT 1	PNT 1	PNT 1	PNT 1	PNT 1	PNT 1	ACT 1	ST 1	PNT 2							
137	Break Room	VCT 1	VCT 1	RUBBER	RUBBER	PNT 1	PNT 1	PNT 1	PNT 1	PNT 1	PNT 1	PNT 1	PNT 1	ACT 1	ST 1	PNT 2	WS 1		PL1	PL1	SS1		
138	COMM	VCT 1	VCT 1	RUBBER	RUBBER	PNT 1	PNT 1	PNT 1	PNT 1	PNT 1	PNT 1	PNT 1	PNT 1	ACT 1	ST 1	PNT 2							
139	Quality Control	VCT 1	CPT 1	RUBBER	RUBBER	PNT 1	PNT 1	PNT 1	PNT 1	PNT 1	PNT 1	PNT 1	PNT 1	ACT 1	ST 1	PNT 2	WS 1						
140	Men's Latrine	HT-2	HT-2	HT-2	HT-2	HT-1, HT-2, PNT 3	HT-1, HT-2, PNT 3	HT-1, HT-2, PNT 3	HT-1, HT-2, PNT 3	HT-1	HT-1	HT-1	HT-1	ACT 2	ST 1	PNT 2			PL1	SS1	STAINLESS		REFER TO ELEVATIONS FOR EXTENT OF TILE INCLUDED IN BASE BID
141	NCOIC	VCT 1	CPT 1	RUBBER	RUBBER	PNT 1	PNT 1	PNT 1	PNT 1	PNT 1	PNT 1	PNT 1	PNT 1	ACT 1	ST 1	PNT 2	WS 1						
142	Hall	VCT 1	VCT 1	RUBBER	RUBBER	PNT 1	PNT 1	PNT 1	PNT 1	PNT 1	PNT 1	PNT 1	PNT 1	ACT 1	ST 1	PNT 2							
143	Vestibule	VCT 1, WM 1	VCT 1, WM 1	RUBBER	RUBBER	PNT 1	PNT 1	PNT 1	PNT 1	PNT 1	PNT 1	PNT 1	PNT 1	ACT 1	ST 1	PNT 2							
144	Guardmount	SC	SC	RUBBER	RUBBER	PNT 1	PNT 1	PNT 1	PNT 1	PNT 1	PNT 1	PNT 1	PNT 1	ACT 1	ST 1	PNT 2			PL1	PL1	SS1		
145	Squad Leader Work Area	VCT 1	CPT 1	RUBBER	RUBBER	PNT 1	PNT 1	PNT 1	PNT 1	PNT 1	PNT 1	PNT 1	PNT 1	ACT 1	ST 1	PNT 2	WS 1						
146	Hall	VCT 1	VCT 1	RUBBER	RUBBER	PNT 1	PNT 1	PNT 1	PNT 1	PNT 1	PNT 1	PNT 1	PNT 1	ACT 1	ST 1	PNT 2							
147	Classroom / CATS Training	VCT 1	CPT 1	RUBBER	RUBBER	PNT 1	PNT 1	PNT 1	PNT 1	PNT 1	PNT 1	PNT 1	PNT 1	ACT 1	ST 1	PNT 2	WS 1						
148a	Weapons Issue & Storage	SC	SC	RUBBER	RUBBER	PNT 1	PNT 1	PNT 1	PNT 1	PNT 1	PNT 1	PNT 1	PNT 1	ACT 1	PNT 2	PNT 2							
148b	Latrine	SC	HT-2	RUBBER	HT-2	PNT 3	PNT 3	PNT 3	PNT 3	HT-1	HT-1	HT-1	HT-1	ACT 2	PNT 2	PNT 2							REFER TO ELEVATIONS FOR EXTENT OF TILE INCLUDED IN BASE BID
150	Supply	SC	SC	RUBBER	RUBBER	PNT 1	PNT 1	PNT 1	PNT 1	PNT 1	PNT 1	PNT 1	PNT 1	Exposed / PNT 4	PNT 2	PNT 2							PAINT ALL EXPOSED STRUCTURAL AND MEP ITEMS IN CEILING OF THIS SPACE.
151	Water	SC	SC	RUBBER	RUBBER	PNT 1	PNT 1	PNT 1	PNT 1	PNT 1	PNT 1	PNT 1	PNT 1	Exposed	PNT 2	PNT 2							

FINISH SCHEDULE LEGEND

CARPET

CPT1: Manufacturer: Shaw Contract
Style: Memory Tile
Color: Nestle
Size: 24" x 24"
Install Method: Monolithic

ACOUSTIC CEILING

ACT1: Manufacturer: Armstrong
Style: Cirrus
Size: 24" x 24" x 7/8"
Suspension System: Type 11
Edge: Square
See specification section 09 5100

ACT2: Manufacturer: Armstrong
Style: Clean Room VL
Size: 24" x 24" x 7/8"
Suspension System: Type 11
Edge: Square
See specification section 09 5100

PLASTIC LAMINATE

PL1: Manufacturer: Formica
Color: Noir Cedar 1547-PG

PAINT

PNT1: Manufacturer: Sherwin Williams
Color: Agreeable Gray SW7029

PNT2: Manufacturer: Sherwin Williams
Color: Urbane Bronze SW7048

PNT3: Manufacturer: Sherwin Williams
Color: Dovetail SW7018

PNT4: Manufacturer: Sherwin Williams
Color: Requisite Gray SW7023

PNT5: Manufacturer: Sherwin Williams
Color: Foggy Day SW6235

VINYL COMPOSITION TILE FLOORING

VCT1: Manufacturer: Armstrong
Style: Premium Excelon Raffia Stream
Color: Rain 55901
Size: 12" x 24"
Install Pattern: Ashlar

CONCRETE

SC: Sealed Concrete
See Spec Section: 09 9123

DOOR STAIN/ WOOD STAIN TO MATCH

ST1: Manufacturer: Oshkosh
Type: SWB
Color: Chestnut 1550

WALK OFF MAT - SEE SPECIFICATION 12 4813

WM1: Manufacturer: Pawling Corp.
Style: EM-650
Rigid Back Nylon Capet Inserts: 519 Near Black

RUBBER BASE

RB1: Manufacturer: Roppe
Color: P178 Pewter

WINDOW SHADES

WS1: Manufacturer: Mecho
Type: ThermoVeil
Color: 1516 Eggshell
Openess: 3%

FIBERGLASS REINFORCED PANELING

FRP: Refer to Specification Section 06 8316

SOLID SURFACE

SS1: Manufacturer: Conan
Color: Carbon Concrete

SS2: HANDRYERS
Manufacturer: Conan Solid Surface
Color: Cameo White
Edge Finish: Square

TILE

HT1: Manufacturer: Daltile
Style: Exquisite
Color: Ivory EQ10
Size: 12 x 24
Install Pattern: 1/3 Ashlar

HT2: Manufacturer: Daltile
Style: Chord
Color: Canon Gray
Size: 12 x 24
Install Pattern: 1/3 Ashlar

GROUT: Manufacturer: Laticrete
Color: Dusty Grey 60

HT3: Manufacturer: Daltile
Style: Exquisite
Color: Ivory EQ10
Size: 2 x 4
Install Pattern: Brick Pattern Mosaic

GENERAL NOTES:

1. REFER TO SPECIFICATION SECTION 01 2300 FOR DESCRIPTION OF BID OPTIONS.

S|S&L
ARCHITECTURE & INTERIOR DESIGN
1135 South Court Montgomery, AL 36104
Tel 334.263.5162 | WWW.SSLARCH.COM

Rev.	Description	Date

Job Number
12072

Date
JUNE 2024

Drawn By
JJ, NB, DCD, JBW, DOB

Checked By
DCD

Project Title

New Security Building
117th Air Refueling Wing
Birmingham, AL

Sheet Title
Finish Schedule

Sheet Number
A3.1

STATE OF ALABAMA
MONTGOMERY
Jim S. Sealy, Jr.
1966
Gregory A. O'Neal
6015
Wesley S. Carter
6104
ALABAMA
REGISTERED ARCHITECTS

Door, Opening & Frame Schedule - BASE BID

	Width	Height	Thickness	Door Type	Frame Type	Glazing Type	Head Detail 2	Jamb Detail	Sill Detail	Notes	Fire Resistance Rating	SIGNAGE TYPE
Level 1												
121a	6' - 0"	7' - 0"	0' - 1 3/4"	FG WD	MH F2	S-1	3/A3.2	3/A3.2 SIM.				A
121b	6' - 0"	9' - 9 1/2"	0' - 2"	CW EXT	SEE OPENING SCHEDULE	IG-1	SEE OPENING SCHEDULE	SEE OPENING SCHEDULE	SEE OPENING SCHEDULE			
122	3' - 0"	7' - 0"	0' - 1 3/4"	FG WD	MH F2	S-2	3/A3.2	3/A3.2 SIM.				C
123	3' - 0"	7' - 0"	0' - 1 3/4"	F WD	MH F2		3/A3.2	3/A3.2 SIM.			45 Min.	C
124	3' - 0"	7' - 0"	0' - 1 3/4"	F WD	MH F2		3/A3.2	3/A3.2 SIM.			45 Min.	C
125	3' - 0"	7' - 0"	0' - 1 3/4"	FG WD	MH F2	S-2	3/A3.2	3/A3.2 SIM.				C
126	3' - 0"	7' - 0"	0' - 1 3/4"	F WD	MH F2		3/A3.2	3/A3.2 SIM.				D
127	3' - 0"	7' - 0"	0' - 1 3/4"	FG WD	MH F2	S-2	3/A3.2	3/A3.2 SIM.				C
129a	3' - 0"	7' - 0"	0' - 1 3/4"	FG WD	MH F2	S-1	3/A3.2	3/A3.2 SIM.				C
129b	3' - 0"	7' - 0"	0' - 1 3/4"	FG WD	MH F2	S-1	3/A3.2	3/A3.2 SIM.				C
130	3' - 0"	7' - 0"	0' - 1 3/4"	F WD	MH F2		4/A3.2	4/A3.2 SIM.				C
130a	3' - 0"	7' - 0"	0' - 1 3/4"	F WD	MH F2		4/A3.2	4/A3.2 SIM.				C
130b	3' - 0"	7' - 0"	0' - 1 3/4"	F WD	MH F2		3/A3.2	3/A3.2 SIM.				C
131	3' - 0"	7' - 0"	0' - 1 3/4"	FG WD	MH F2	S-2	3/A3.2	3/A3.2 SIM.				C
132	3' - 0"	7' - 0"	0' - 1 3/4"	F WD	MH F2		3/A3.2	3/A3.2 SIM.				D
133a	3' - 0"	7' - 0"	0' - 1 3/4"	FG WD	MH F2	S-1	3/A3.2	3/A3.2 SIM.				C
133b	3' - 0"	7' - 0"	0' - 1 3/4"	FG WD	MH F2	S-2	4/A3.2	4/A3.2 SIM.				C
133c	3' - 0"	7' - 0"	0' - 1 3/4"	FG WD	MH F2	S-2	4/A3.2	4/A3.2 SIM.				C
134	3' - 0"	7' - 0"	0' - 1 3/4"	F WD	MH F2		3/A3.2	3/A3.2 SIM.				C
135	3' - 0"	7' - 0"	0' - 1 3/4"	FG WD	MH F2	S-2	3/A3.2	3/A3.2 SIM.				C
137	3' - 0"	7' - 0"	0' - 1 3/4"	FG WD	MH F2	S-1	3/A3.2	3/A3.2 SIM.				C
138	3' - 0"	7' - 0"	0' - 1 3/4"	F WD	MH F2		3/A3.2	3/A3.2 SIM.				C
139	3' - 0"	7' - 0"	0' - 1 3/4"	FG WD	MH F2	S-2	3/A3.2	3/A3.2 SIM.				C
140	3' - 0"	7' - 0"	0' - 1 3/4"	F WD	MH F2		3/A3.2	3/A3.2 SIM.				D
141	3' - 0"	7' - 0"	0' - 1 3/4"	FG WD	MH F2	S-2	3/A3.2	3/A3.2 SIM.				C
143a	6' - 0"	7' - 0"	0' - 1 3/4"	FG WD	MH F2	S-1	3/A3.2	3/A3.2 SIM.				A
143b	7' - 7"	10' - 1 1/2"	0' - 2"	CW EXT	SEE OPENING SCHEDULE	IG-1	SEE OPENING SCHEDULE	SEE OPENING SCHEDULE	SEE OPENING SCHEDULE			
144	6' - 0"	7' - 0"	0' - 1 3/4"	F HM	MH F2		4/A3.2	4/A3.2 SIM.			45 Min.	A, C
145	3' - 0"	7' - 0"	0' - 1 3/4"	FG WD	MH F2	S-1	3/A3.2	3/A3.2 SIM.				C
146	3' - 0"	7' - 0"	0' - 1 3/4"	NL WD	MH F2	S-1	3/A3.2	3/A3.2 SIM.				A, B
147	6' - 0"	7' - 0"	0' - 1 3/4"	F HM	MH F2		4/A3.2	4/A3.2 SIM.				C
148a	3' - 0"	7' - 0"	0' - 1 3/4"	VDA	VDA F		4/A3.2	4/A3.2 SIM.			45 Min.	B, C
148b	3' - 0"	7' - 0"	0' - 1 3/4"	F HM	MH F2		4/A3.2	4/A3.2 SIM.				D
150a	3' - 0"	7' - 0"	0' - 1 3/4"	F HM EXT	MH F2		4/A3.2	4/A3.2 SIM.			45 Min.	A, B, C
150b	3' - 7"	7' - 9 1/2"	0' - 2"	CW EXT	SEE OPENING SCHEDULE	IG-1	SEE OPENING SCHEDULE	SEE OPENING SCHEDULE	SEE OPENING SCHEDULE			A
150c	3' - 7"	7' - 9 1/2"	0' - 2"	CW EXT	SEE OPENING SCHEDULE	IG-1	SEE OPENING SCHEDULE	SEE OPENING SCHEDULE	SEE OPENING SCHEDULE			A
150d	12' - 0"	10' - 0"	0' - 3"	SOD EXT	SOD F		6/A3.2	8/A3.2	5/A3.2			
151	3' - 0"	7' - 0"	0' - 1 3/4"	F HM EXT	MH F2		2/A3.4 SIM.	9/A3.4 SIM.	10/A3.4 SIM.			C

DOOR LEGEND:

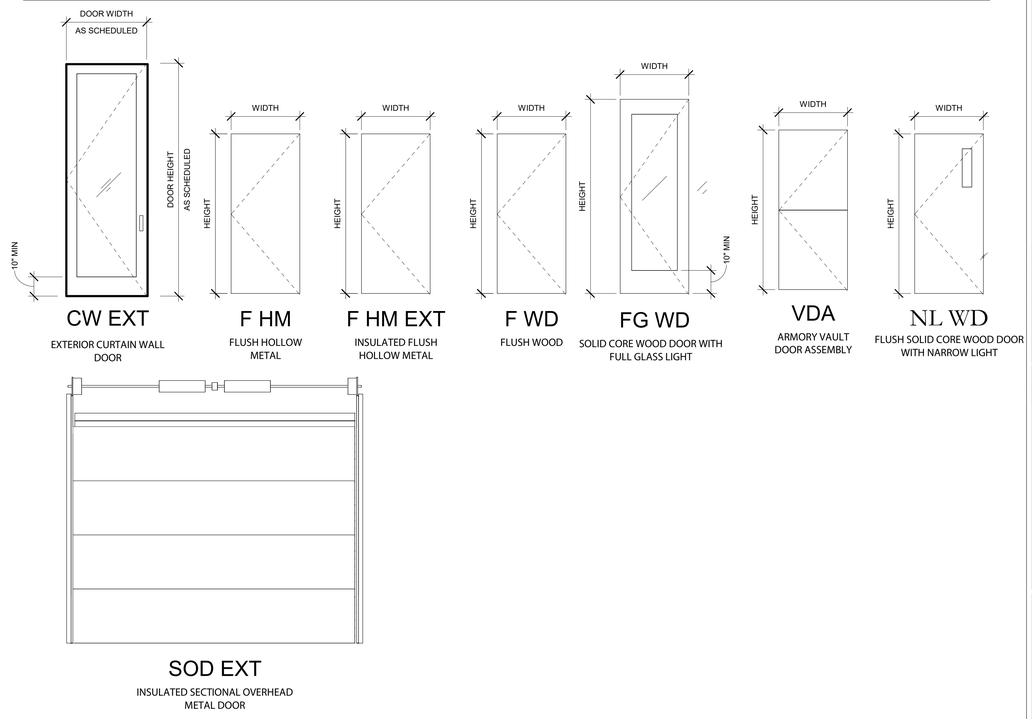

FRAME LEGEND:

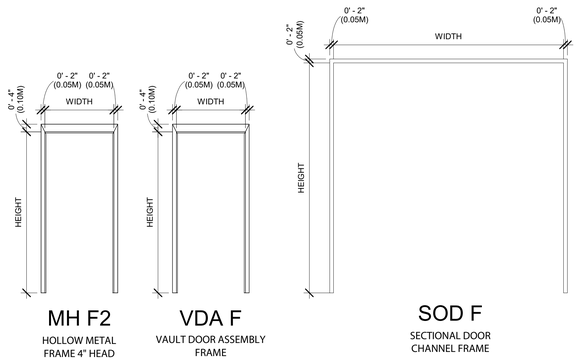

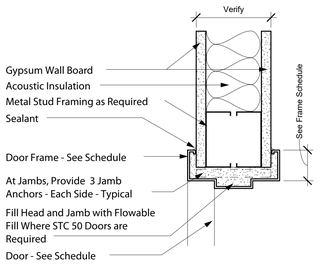

3 / A3.2 HM MTL STUD
3" = 1'-0"

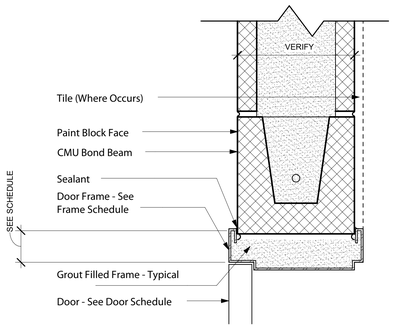

4 / A3.2 Head Detail - HM & CMU - (Jamb Sim)
3" = 1'-0"

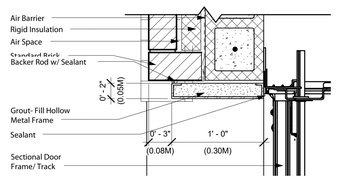

8 / A3.2 Sectional Door Jamb Detail
1 1/2" = 1'-0"

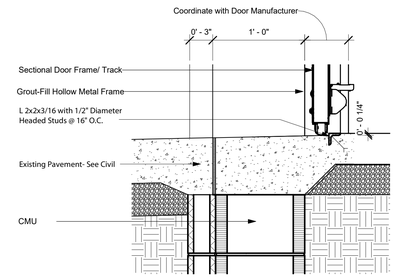

5 / A3.2 Sectional Door Sill Detail
1 1/2" = 1'-0"

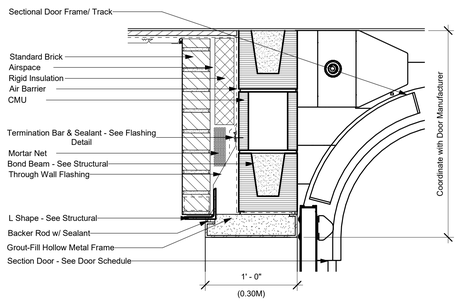

6 / A3.2 Sectional Door Head Detail
1 1/2" = 1'-0"

7 / A3.2 Omitted . .
3" = 1'-0"

SIGNAGE SCHEDULE

NOTE: ALL SIGNS SHALL COMPLY WITH NFPA 101 AND ANSI A117.1

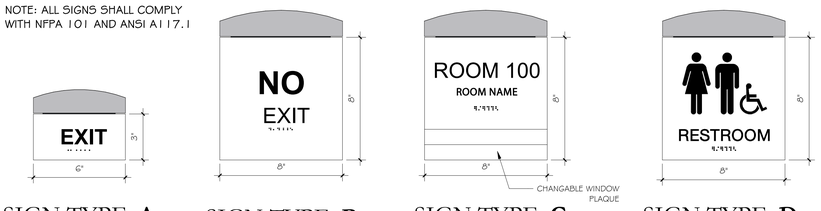

SIGN TYPE: **A**
WAYFINDING ID MOUNTED ADJACENT TO DOOR

SIGN TYPE: **B**
ROOM ID MOUNTED ADJACENT TO DOOR

SIGN TYPE: **C**
ROOM ID MOUNTED ADJACENT TO DOOR

SIGN TYPE: **D**
RESTROOM ID MOUNTED ADJACENT TO DOOR

S|S&L
ARCHITECTURE & INTERIOR DESIGN
1115 South Colonnade Hoover, AL 35216
Tel. 334. 263. 5102 | WWW.SSLARCH.COM

Rev.	Description	Date

Job Number
12072

Date
JUNE 2024

Drawn By
JJ, NB, DCD, JBW, DOB

Checked By
DCD

Project Title
New Security Building
117th Air Refueling Wing
Birmingham, AL

Sheet Title
Door Schedule & Details

Sheet Number
A3.2

STATE OF ALABAMA
MONTGOMERY
This 11. Sept. 2
1944
Gregory A. O'Neal
6015
Wesley S. Carter
6104
ALABAMA
REGISTERED ARCHITECTS

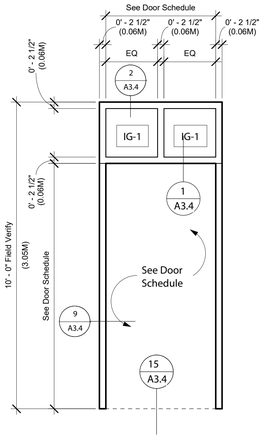

Curtain Wall Type 4

4

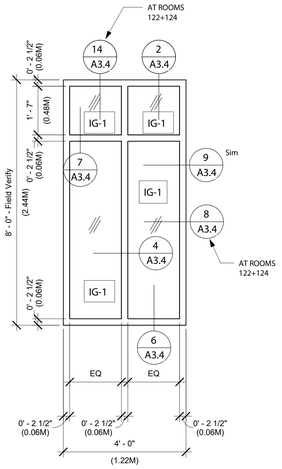

Curtain Wall Type 8

8

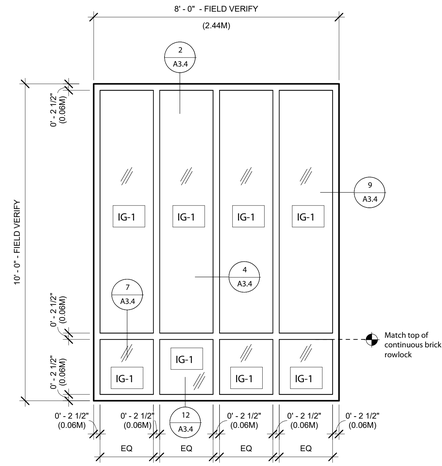

Curtain Wall Type 13

13

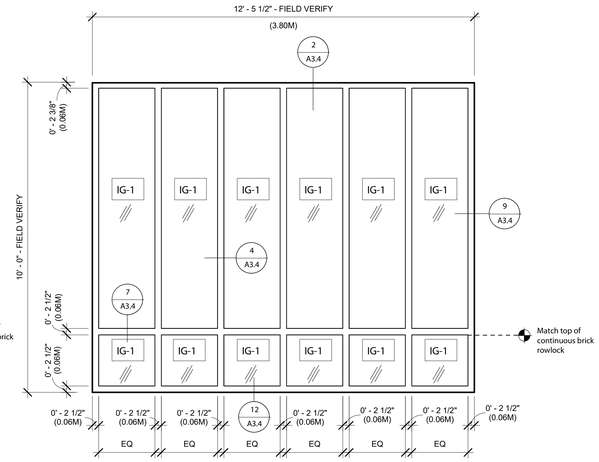

Curtain Wall Type 14

14

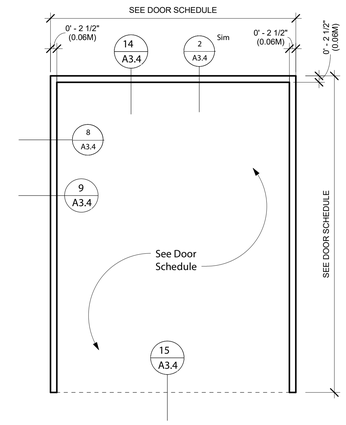

Curtain Wall Type 15

15

GENERAL NOTES:

1. TYPES 1,2,5,6,9,10, AND 12 ARE OMMITTED.

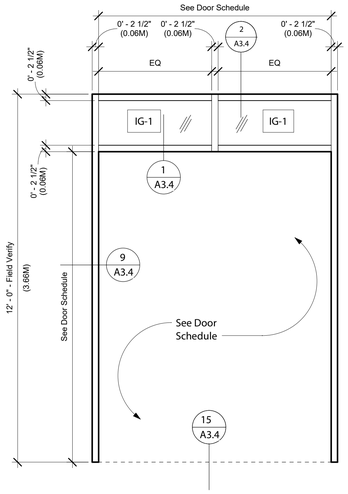

Curtain Wall Type 3

3

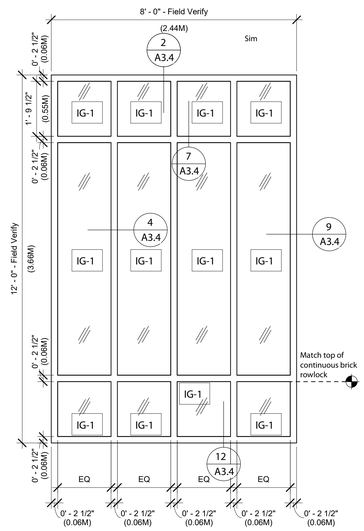

Curtain Wall Type 7

7

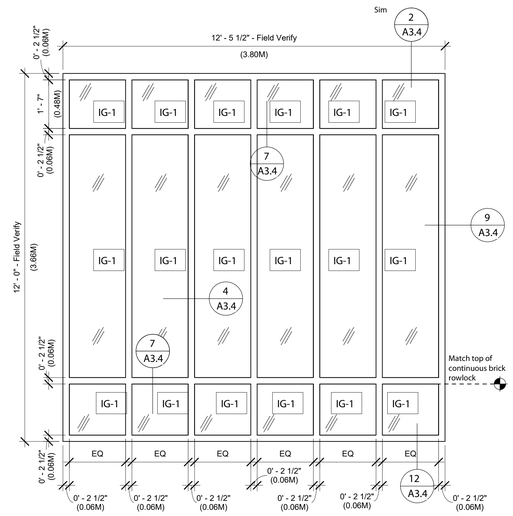

Curtain Wall Type 11

11

BID OPTION

S|S&L
ARCHITECTURE & INTERIOR DESIGN
1115 South Colonnade, Birmingham, AL 35204
Tel. 334. 263. 5102 | WWW.SSLARCH.COM

Rev.	Description	Date

Job Number
12072

Date
JUNE 2024

Drawn By
JJ, NB, DCD, JBW, DOB

Checked By
DCD

Project Title

New Security Building

117th Air Refueling Wing
Birmingham, AL

Sheet Title
Opening Schedule

Sheet Number
A3.3

STATE OF ALABAMA
MONTGOMERY
Jim H. Sears, Jr.
#1013
Gregory A. O'Neal
#243
Wesley S. Conner
#242
ALABAMA
REGISTERED ARCHITECTS

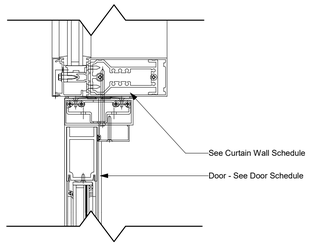

1 A3.4 Curtain Wall Door Head at Transom
3" = 1'-0"

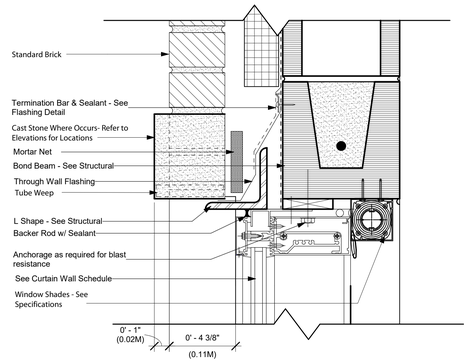

2 A3.4 Window Head Detail
3" = 1'-0"

3 A3.4 OMITTED
3" = 1'-0"

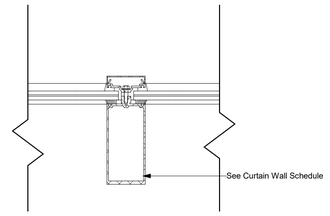

4 A3.4 Vertical Mullion Detail
3" = 1'-0"

5 A3.4 OMITTED.
3" = 1'-0"

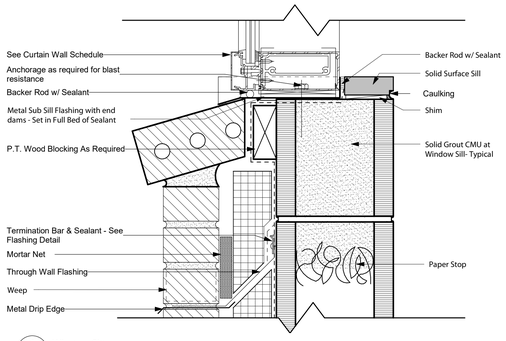

6 A3.4 Window Sill
3" = 1'-0"

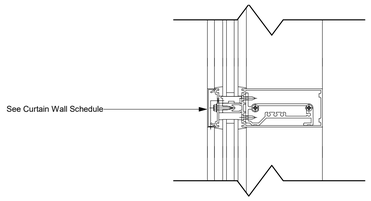

7 A3.4 Curtain Wall Horizontal Mulltion Detail
3" = 1'-0"

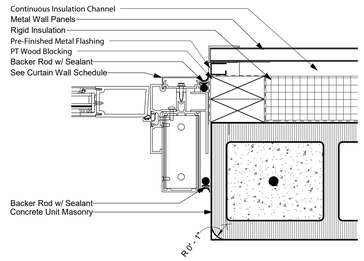

Note: Radiused Jamb Block - Typical base course block to be squared edge

8 A3.4 Curtian Wall Door Jamb at Metal Panel
3" = 1'-0"

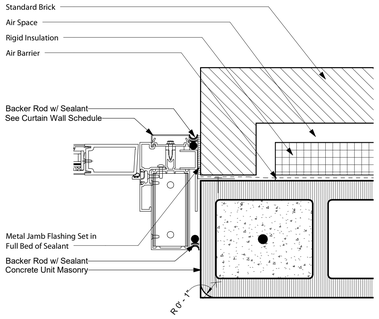

Note: Radiused Jamb Block - Typical base course block to be squared edge

9 A3.4 Jamb without GWB
3" = 1'-0"

10 A3.4 OMITTED.....
3" = 1'-0"

11 A3.4 OMITTED.....
3" = 1'-0"

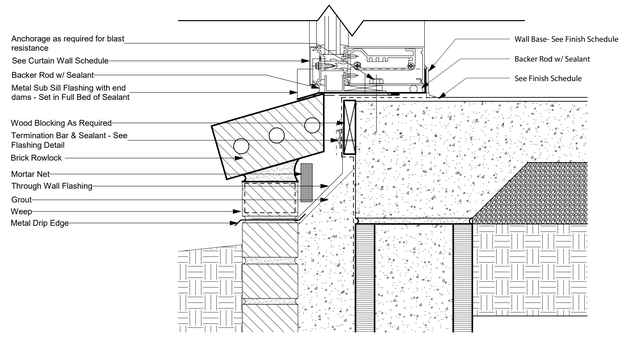

12 A3.4 Window Sill at Finished Floor Detail
3" = 1'-0"

13 A3.4 OMITTED....
3" = 1'-0"

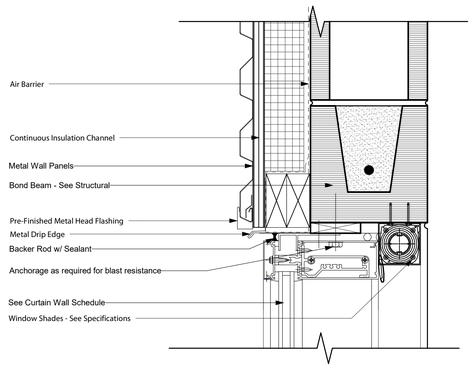

14 A3.4 Window Head at Metal Panel Option
3" = 1'-0"

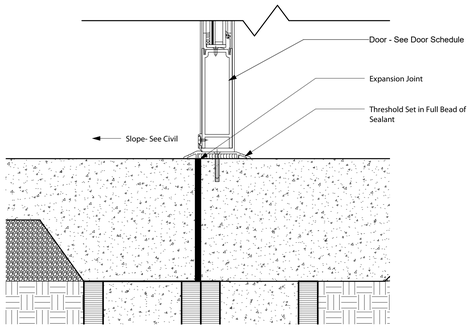

15 A3.4 Curtain Wall Door Sill
3" = 1'-0"

16 A3.4 OMITTED...
3" = 1'-0"

17 A3.4 OMITTED..
3" = 1'-0"

S|S&L
ARCHITECTURE & INTERIOR DESIGN
1115 South Court Street | Montgomery, AL 36104
Tel. 334. 263. 5102 | WWW.SSLARCH.COM

Rev.	Description	Date

Job Number
12072

Date
JUNE 2024

Drawn By
JJ, NB, DCD, JBW, DOB

Checked By
DCD

Project Title

New Security Building
117th Air Refueling Wing
Birmingham, AL

Sheet Title
Curtain Wall & Storefront Details

Sheet Number
A3.4

STATE OF ALABAMA
MONTGOMERY
This 11. Sept. 2. 1944
Gregory A. O'Neal
6045
Wesley S. Carter
6104
ALABAMA
REGISTERED ARCHITECTS

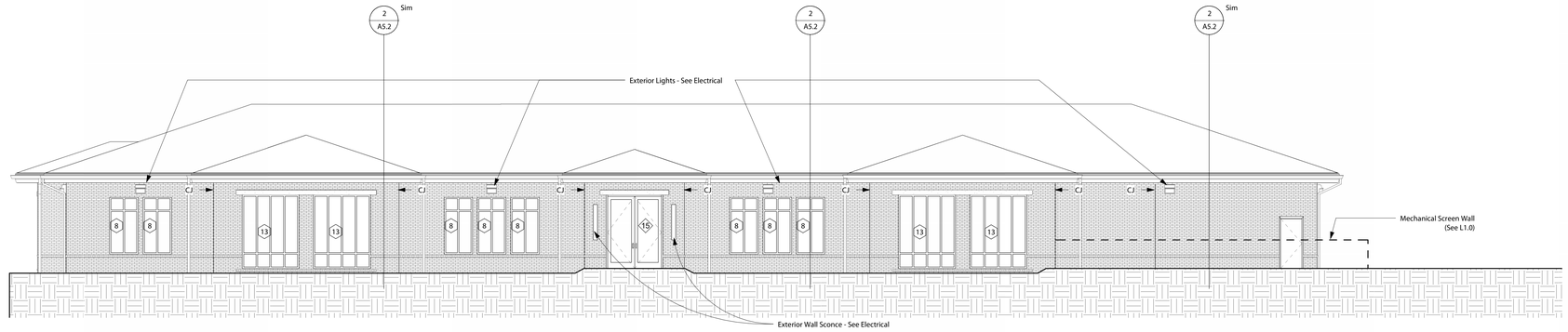

1 A4.1 North Elevation (Base Bid)
1/8" = 1'-0"

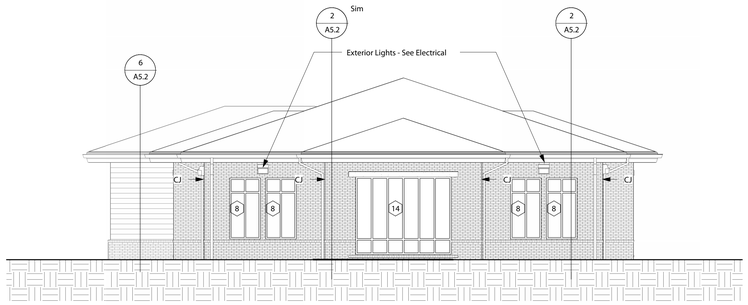

2 A4.1 East Elevation (Base Bid)
1/8" = 1'-0"

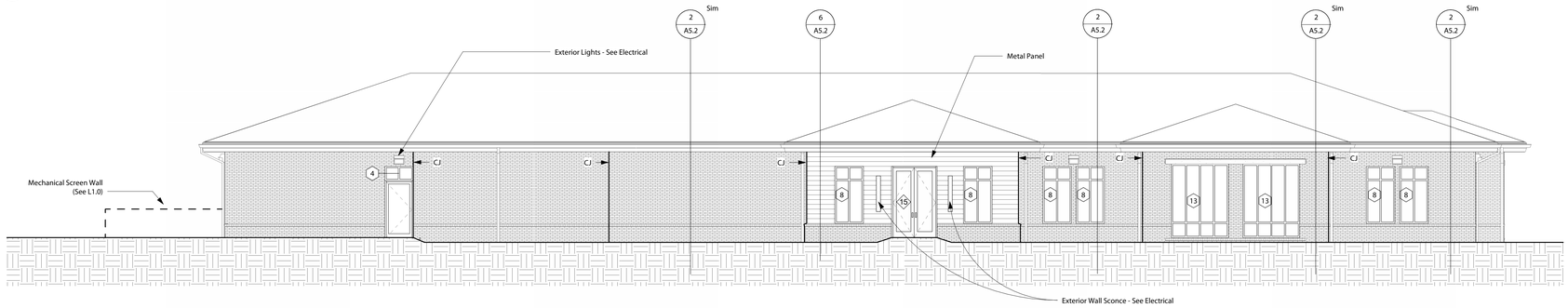

3 A4.1 South Elevation (Base Bid)
1/8" = 1'-0"

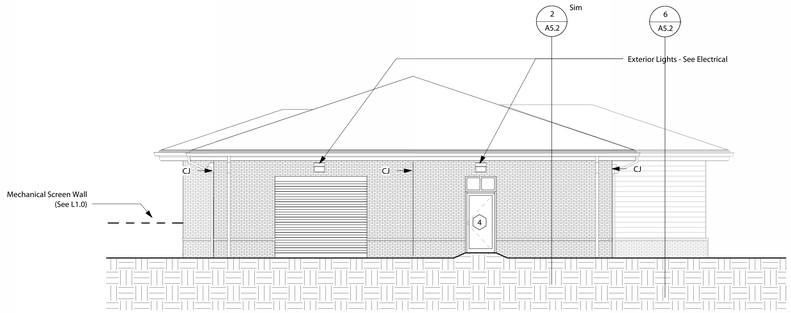

4 A4.1 West Elevation (Base Bid)
1/8" = 1'-0"

See Structural Detail for Additional Requirements

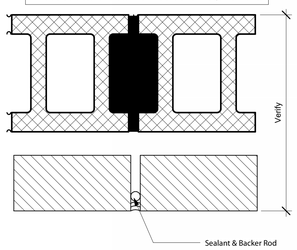

5 A4.1 Masonry Control Joint Detail
3" = 1'-0"

LEGEND

- BRICK
- METAL PANEL
- OPENING TAG
- LIGHT- SEE ELECTRICAL
- CJ — MASONRY CONTROL JOINT- SEE DETAIL 5/A4.1

S|S&L
ARCHITECTURE & INTERIOR DESIGN
1115 South Colonnade | Birmingham, AL 35205
Tel 334.263.5102 | WWW.SSLARCH.COM

Rev.	Description	Date

Job Number
12072

Date
JUNE 2024

Drawn By
JJ, NB, DCD, JBW, DOB

Checked By
DCD

Project Title
New Security Building
117th Air Refueling Wing
Birmingham, AL

Sheet Title
Elevations (Base Bid)

Sheet Number
A4.1

STATE OF ALABAMA
MONTGOMERY
Jim S. Seay, Jr.
1566
Gregory A. O'Neal
4043
Wesley S. Dunn
4084
ALABAMA
REGISTERED ARCHITECTS

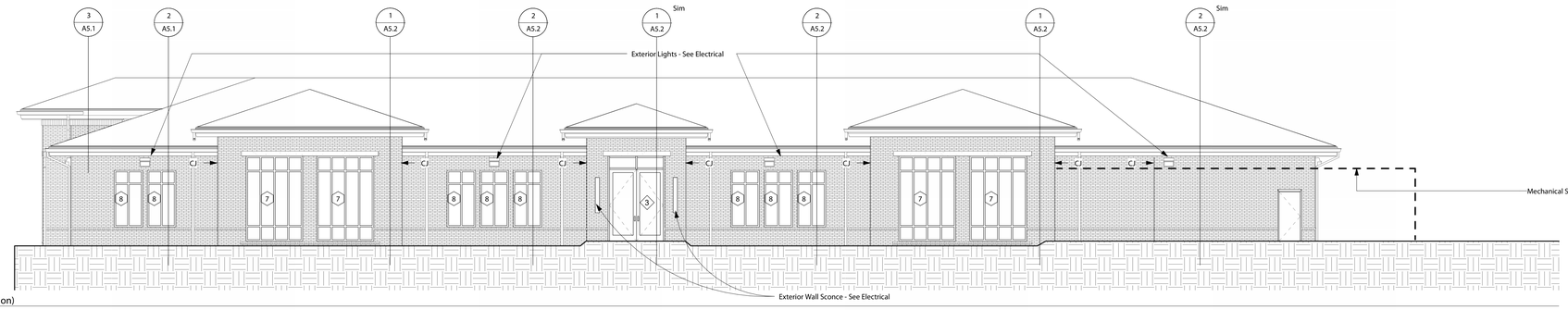

1 / A4.1A North Elevation (Bid Option)
1/8" = 1'-0"

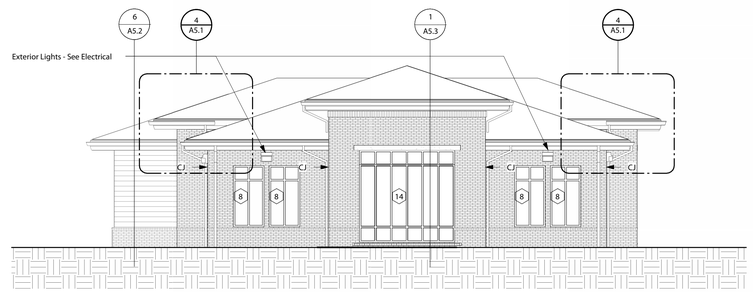

2 / A4.1A East Elevation (Bid Option)
1/8" = 1'-0"

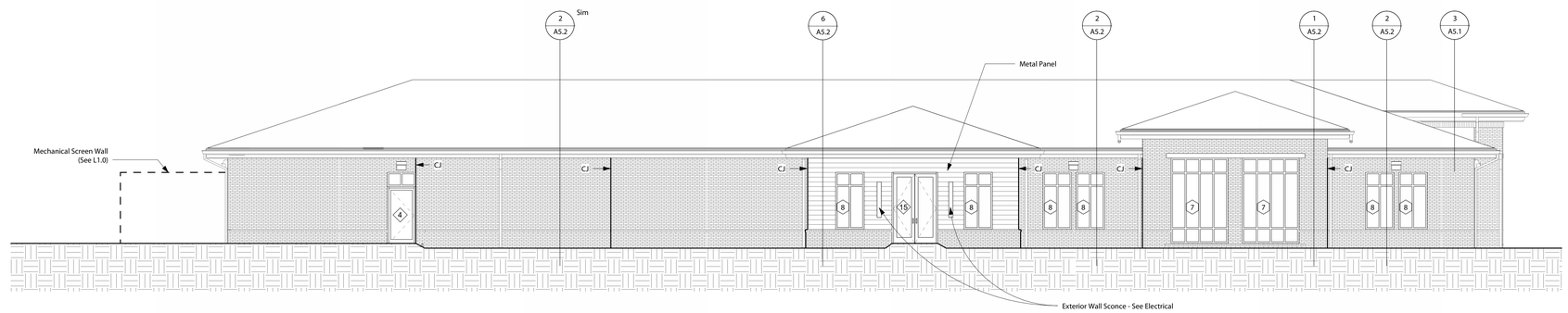

3 / A4.1A South Elevation (Bid Option)
1/8" = 1'-0"

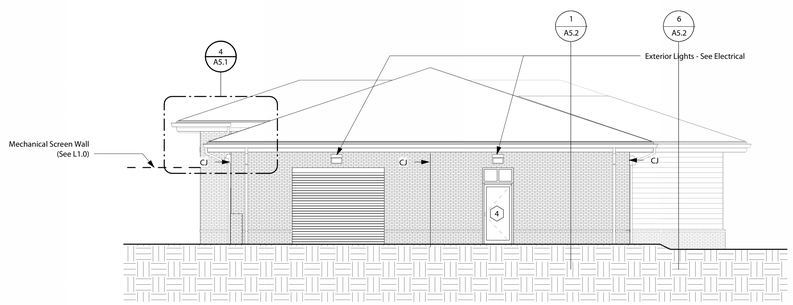

4 / A4.1A West Elevation (Bid Option)
1/8" = 1'-0"

LEGEND

- BRICK
- METAL PANEL
- OPENING TAG
- LIGHT- SEE ELECTRICAL
- CJ — MASONRY CONTROL JOINT- SEE DETAIL 5/A4.1

GENERAL NOTES:

1. REFER TO SPECIFICATION SECTION 01 2300 FOR DESCRIPTION OF BID OPTION.

S|S&L
ARCHITECTURE & INTERIOR DESIGN
1115 South Colonnade | Birmingham, AL 35205
Tel 334.263.5102 | WWW.SSLARCH.COM

Rev.	Description	Date

Job Number
12072

Date
JUNE 2024

Drawn By
JJ, NB, DCD, JBW, DOB

Checked By
DCD

Project Title
New Security Building
117th Air Refueling Wing
Birmingham, AL

Sheet Title
Elevations (Bid Option)

Sheet Number
A4.1A

STATE OF ALABAMA
MONTGOMERY
Jim H. Seay, Jr.
1544
Gregory A. O'Neal
4043
Wesley S. Carter
4544
ALABAMA
REGISTERED ARCHITECTS

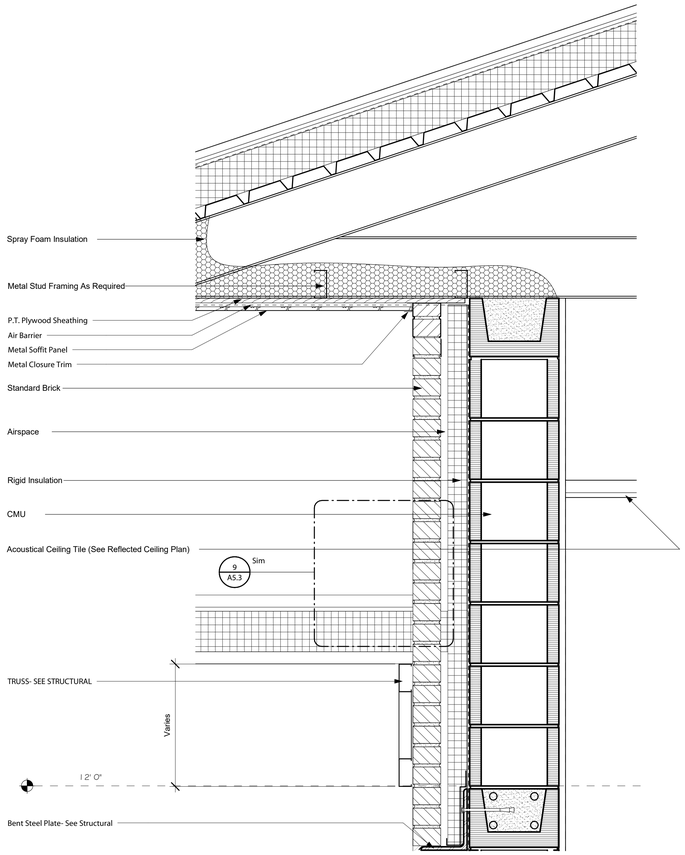

3 A5.1 Wall Section Detail (Bid Option)
1 1/2" = 1'-0"

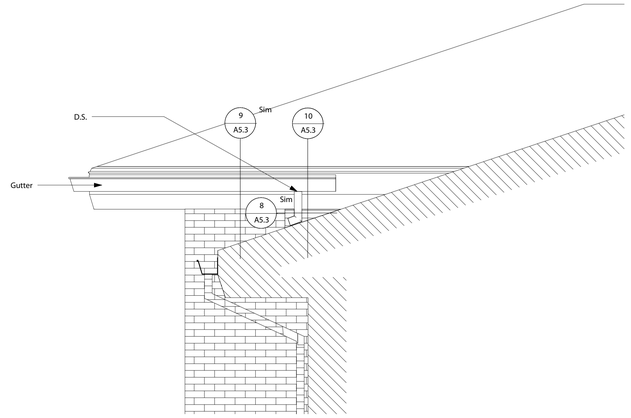

4 A5.1 Roof Detail (Bid Option)
1/2" = 1'-0"

GENERAL NOTES:

1. REFER TO SPECIFICATION SECTION 01 2300 FOR DESCRIPTION OF BID OPTION.

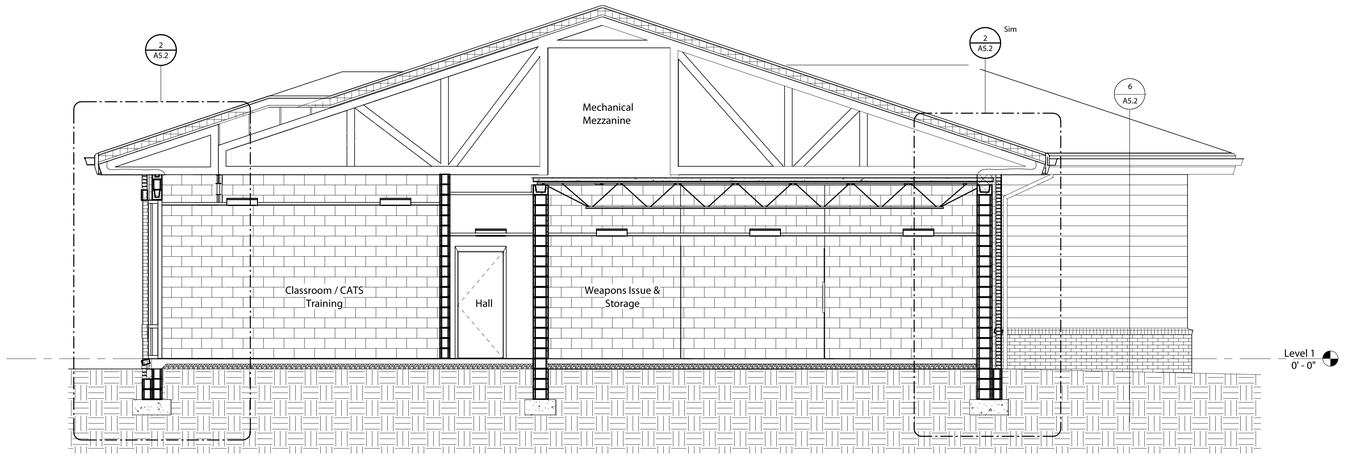

1 A5.1 Building Section (Base Bid)
1/4" = 1'-0"

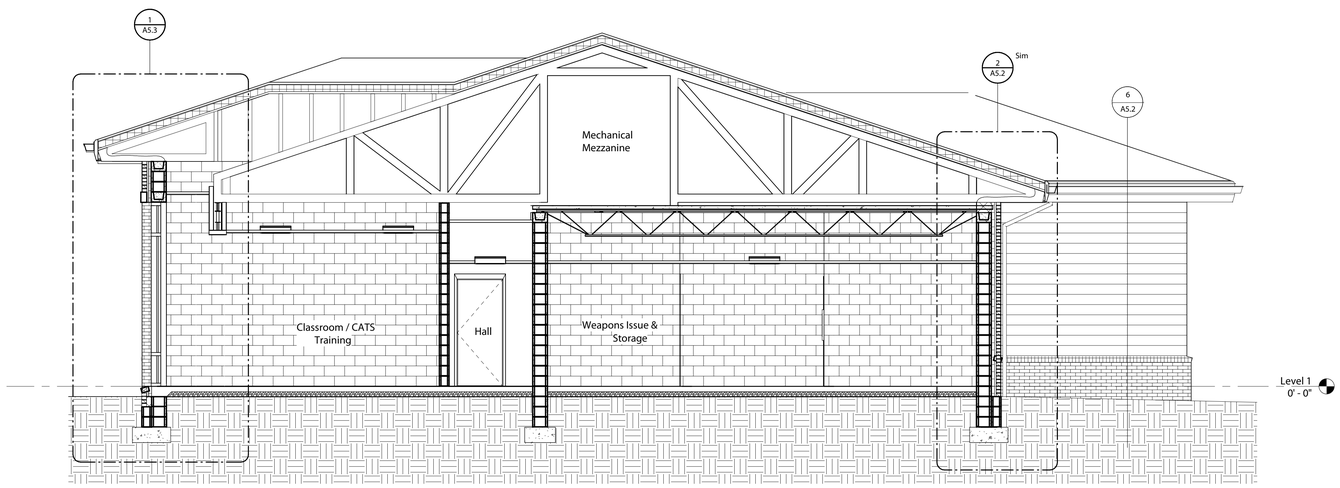

2 A5.1 Building Section (Bid Option)
1/4" = 1'-0"

S|S&L
ARCHITECTURE & INTERIOR DESIGN
1115 South Court Street | Montgomery, AL 36104
Tel 334.263.5102 | WWW.SSLARCH.COM

Rev.	Description	Date

Job Number
12072

Date
JUNE 2024

Drawn By
JJ, NB, DCD, JBW, DOB

Checked By
DCD

Project Title

New Security Building

117th Air Refueling Wing
Birmingham, AL

Sheet Title
Building Sections

Sheet Number
A5.1

STATE OF ALABAMA
MONTGOMERY
Jim S. Seay, Jr.
1566
Gregory A. O'Neal
4043
Wesley S. Joiner
4084
ALABAMA
REGISTERED ARCHITECTS

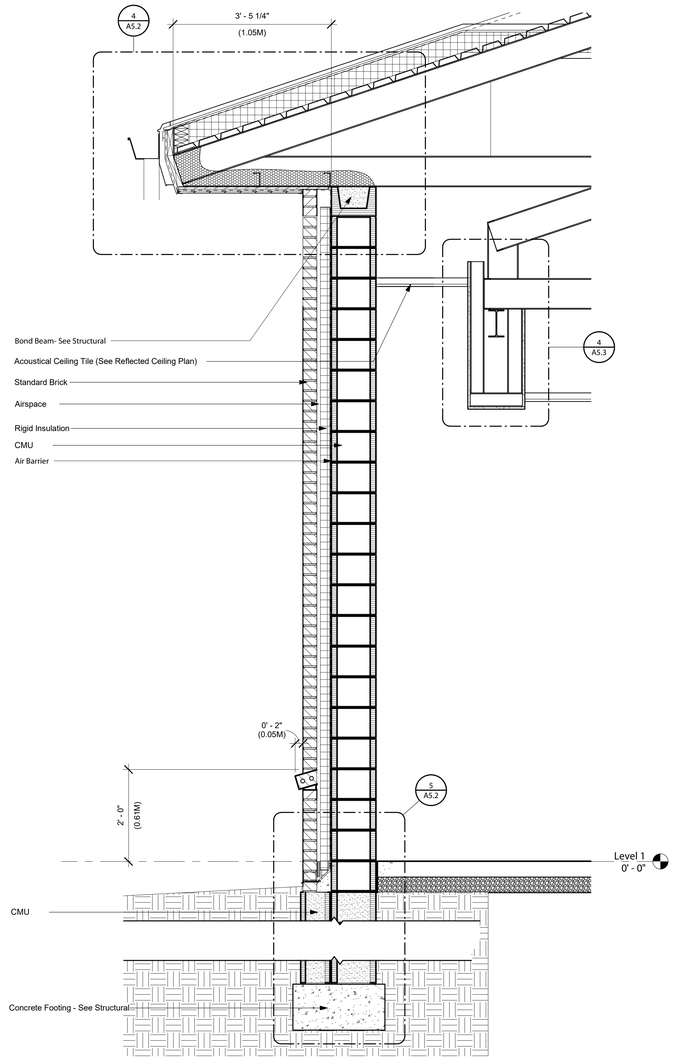

1 A5.2 Typical Wall Section at High Roof (Bid Option)
3/4" = 1'-0"

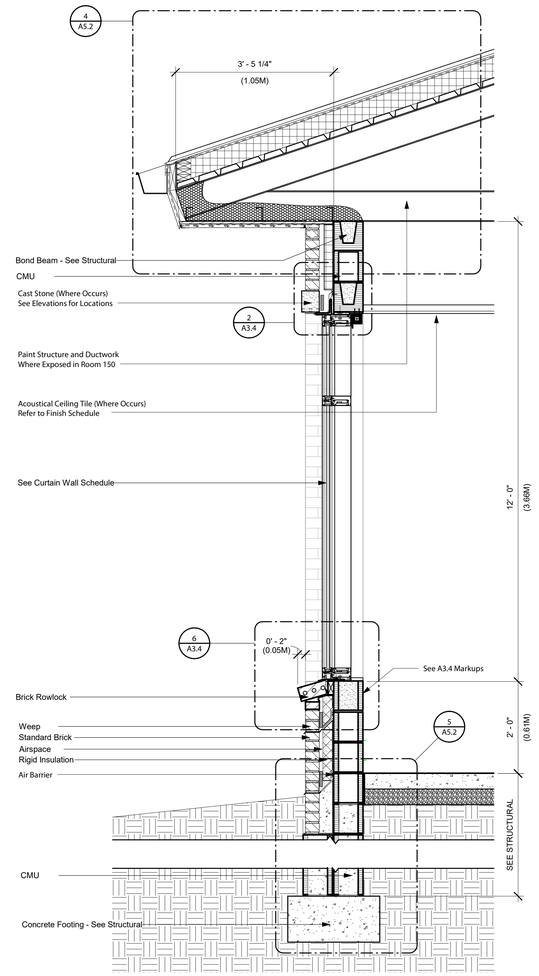

2 A5.2 Typical Wall Section at Window
3/4" = 1'-0"

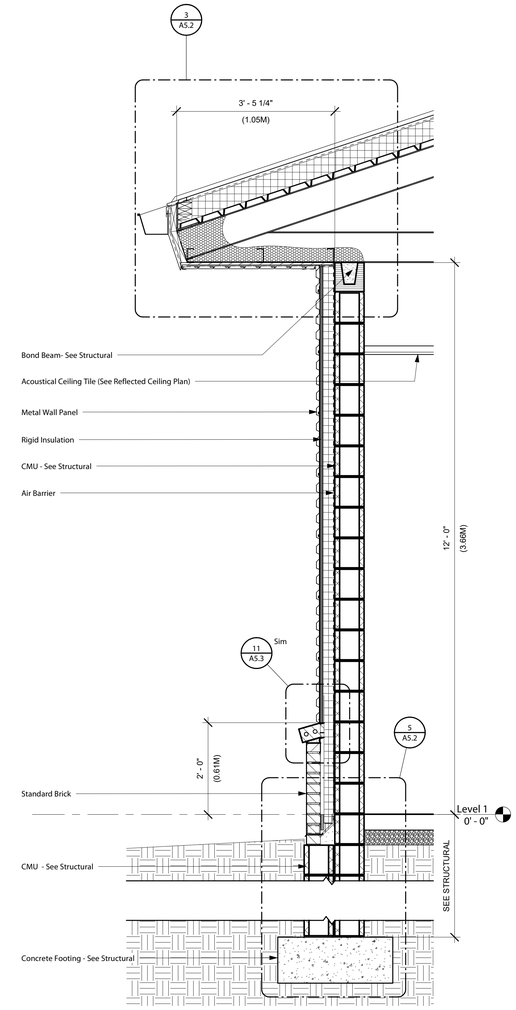

6 A5.2 Typical Wall Section at Metal Wall Panel
3/4" = 1'-0"

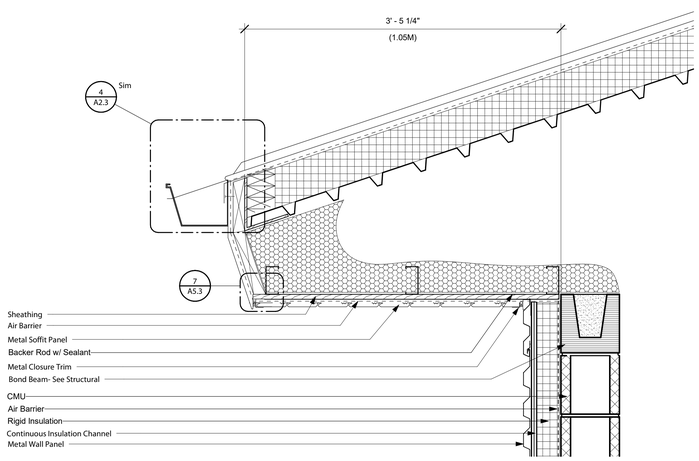

3 A5.2 Roof Eave Detail at Metal Stud
1 1/2" = 1'-0"

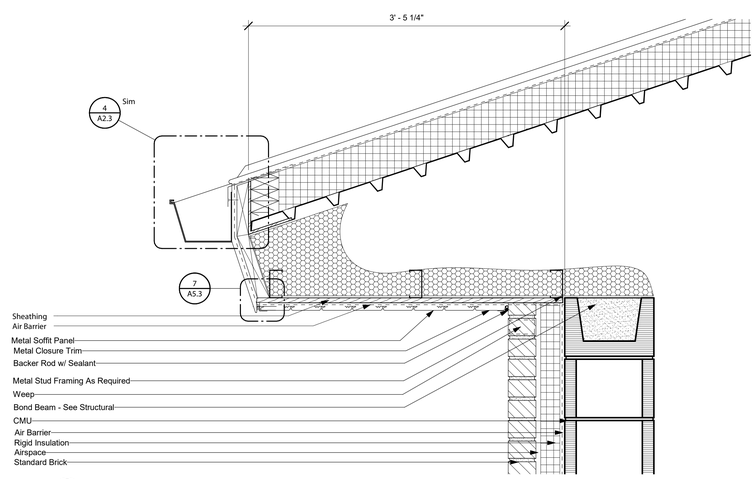

4 A5.2 Roof Eave Detail
1 1/2" = 1'-0"

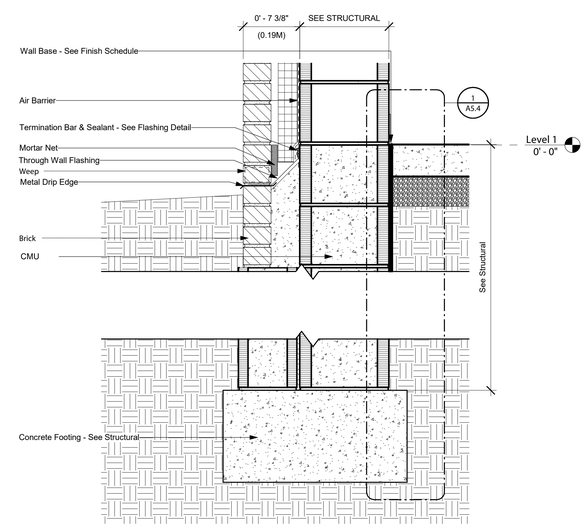

5 A5.2 Wall Base Detail
1 1/2" = 1'-0"

S|S&L
ARCHITECTURE & INTERIOR DESIGN
1135 South Cahaba Vestavia Hills, AL 35216
Tel. 334. 263. 5162 | WWW.SSLARCH.COM

Rev.	Description	Date

Job Number
12072

Date
JUNE 2024

Drawn By
JJ, NB, DCD, JBW, DOB

Checked By
DCD

Project Title

New Security Building
117th Air Refueling Wing
Birmingham, AL

Sheet Title
Wall Sections

Sheet Number
A5.2

STATE OF ALABAMA
MONTGOMERY
Jim H. Sorey Jr.
1994
Gregory A. O'Neal
4010
Wesley S. Carter
4244
ALABAMA
REGISTERED ARCHITECTS

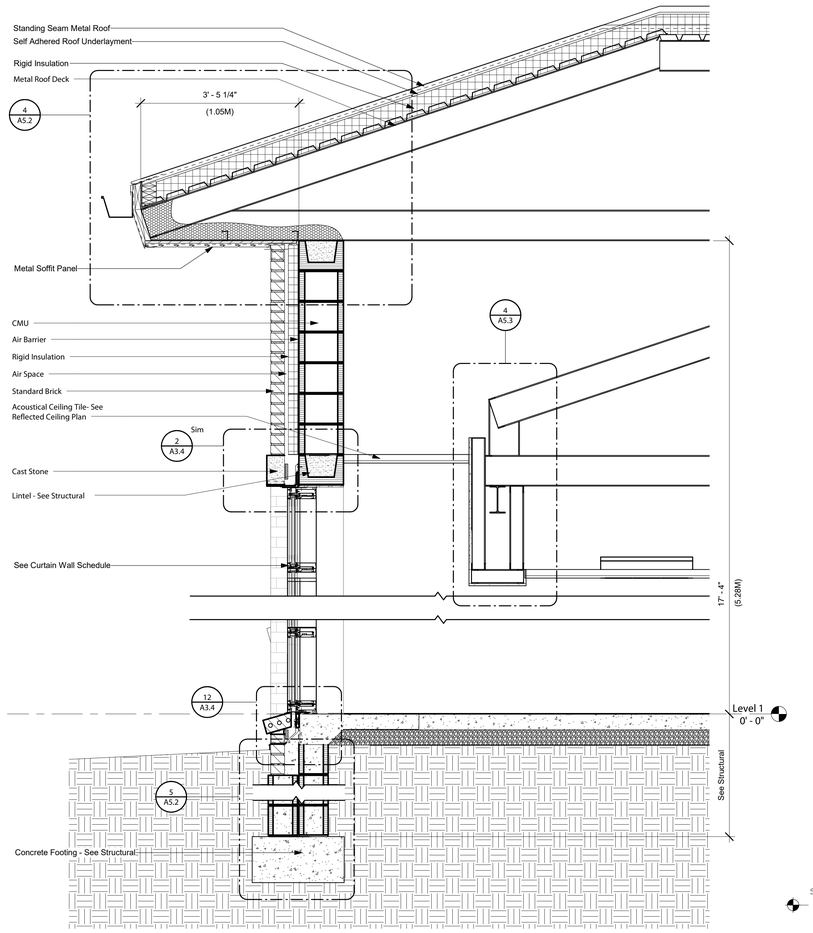

1 / A5.3 Wall Section at Orderly Room (Bid Option)
3/4" = 1'-0"

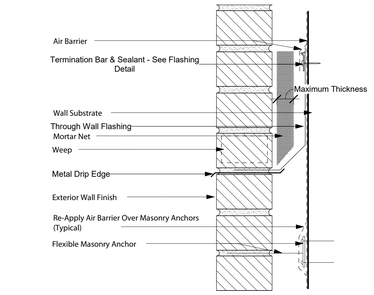

2 / A5.3 Typical Flashing Detail
3" = 1'-0"

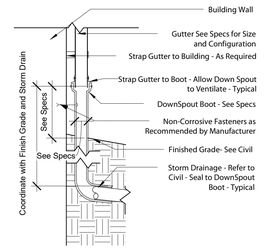

3 / A5.3 Typical Downspout Boot Detail
3" = 1'-0"

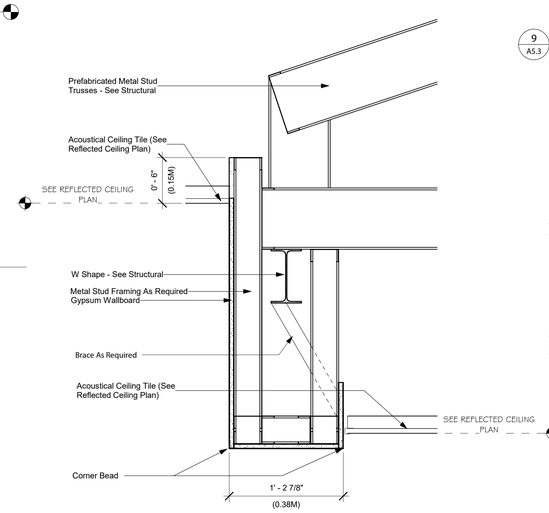

4 / A5.3 Bulkhead Detail at Orderly Room
1 1/2" = 1'-0"

5 / A5.3 OMITTED. .
3" = 1'-0"

6 / A5.3 OMITTED. . .
3" = 1'-0"

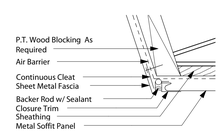

7 / A5.3 Typical Fascia Detail
3" = 1'-0"

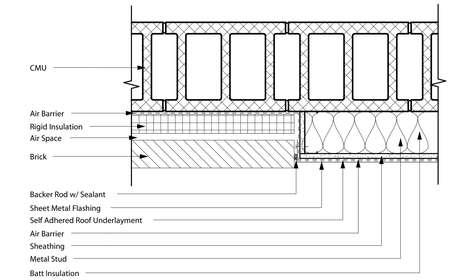

8 / A5.3 Brick to Metal Panel Transition
1 1/2" = 1'-0"

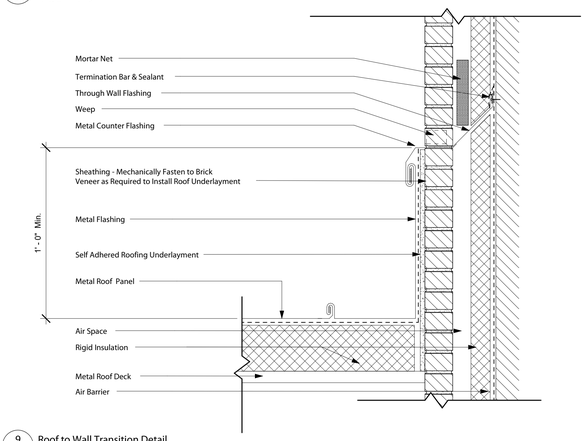

9 / A5.3 Roof to Wall Transition Detail
1 1/2" = 1'-0"

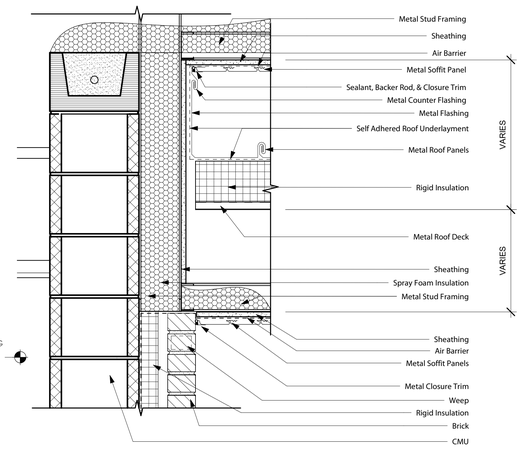

10 / A5.3 Metal Panel Corner Detail
1 1/2" = 1'-0"

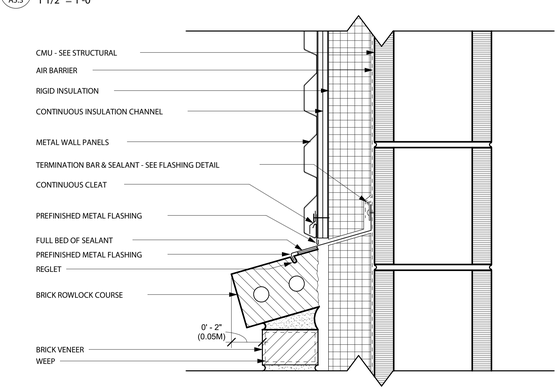

11 / A5.3 Brick to Metal Panel Transition Detail
3" = 1'-0"

S|S&L
ARCHITECTURE & INTERIOR DESIGN
1115 South Court St. Montgomery, AL 36104
Tel. 334. 263. 5102 | WWW.SSLARCH.COM

Rev.	Description	Date

Job Number
12072

Date
JUNE 2024

Drawn By
JJ, NB, DCD, JBW, DOB

Checked By
DCD

Project Title
New Security Building
117th Air Refueling Wing
Birmingham, AL

Sheet Title
Wall Sections

Sheet Number
A5.3

STATE OF ALABAMA
MONTGOMERY
Jim H. Sorey, Jr.
1594
Gregory A. O'Neal
4043
Wesley S. Clemer
4244
ALABAMA
REGISTERED ARCHITECTS

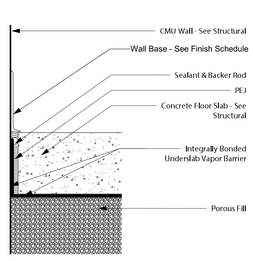

1 / A5.4 EXTERIOR WALL VAPOR BARRIER DETAIL - CMU WALL
3" = 1'-0"

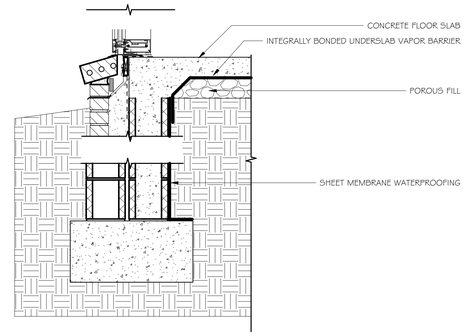

2 / A5.4 EXTERIOR WALL VAPOR BARRIER DETAIL - CURTAIN WALL
1" = 1'-0"

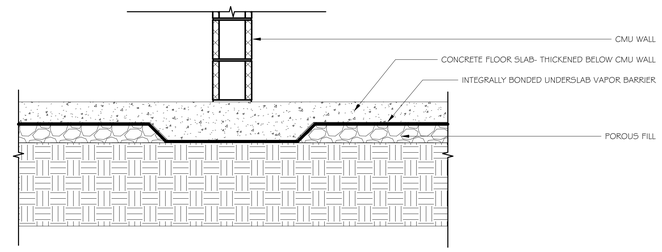

3 / A5.4 INTERIOR WALL VAPOR BARRIER DETAIL - THICKENED SLAB
1" = 1'-0"

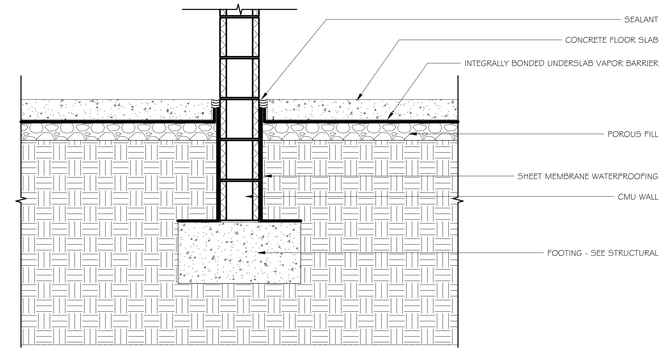

4 / A5.4 INTERIOR WALL VAPOR BARRIER DETAIL - CMU WALL W/ FOOTING
1" = 1'-0"

S|S&L
ARCHITECTURE & INTERIOR DESIGN
1115 South Colonnade Montgomery, AL 36104
Tel. 334.263.5162 | WWW.SSLARCH.COM

Rev.	Description	Date

Job Number
12072

Date
JUNE 2024

Drawn By
JJ, NB, DCD, JBW, DOB

Checked By
DCD

Project Title

New Security Building
117th Air Refueling Wing
Birmingham, AL

Sheet Title
Vapor Barrier Details

Sheet Number
A5.4

STATE OF ALABAMA
MONTGOMERY
Jim S. Sorg, Jr.
1644
Gregory A. O'Neal
6045
Wesley S. Carver
6244
ALABAMA
REGISTERED ARCHITECTS

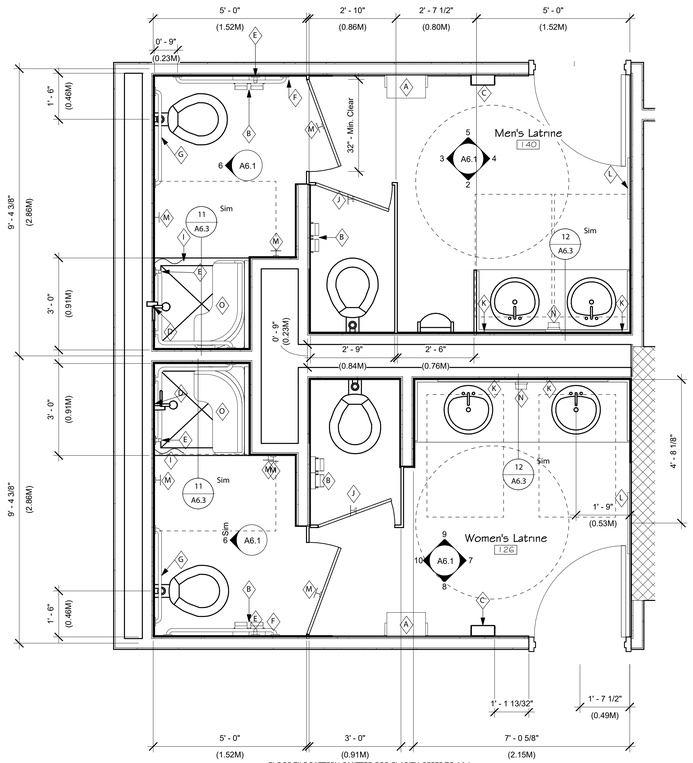

FLOOR TILE PATTERN OMITTED FOR CLARITY. REFER TO A9.1.
REFER TO 1/A6.2 FOR BID OPTION.

1 / A6.1 Enlarged Floor Plan
1/2" = 1'-0"

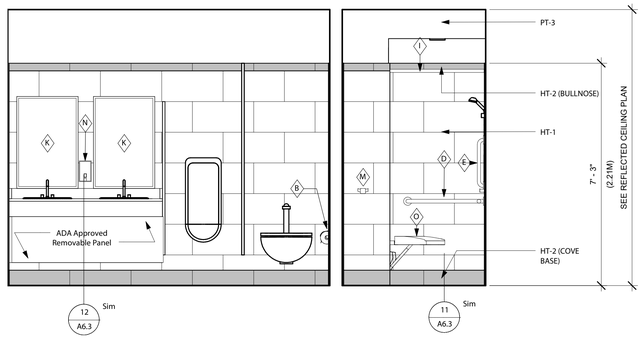

2 / A6.1 Men's Latrine 140 Elevation 1 (BASE BID)
1/2" = 1'-0"

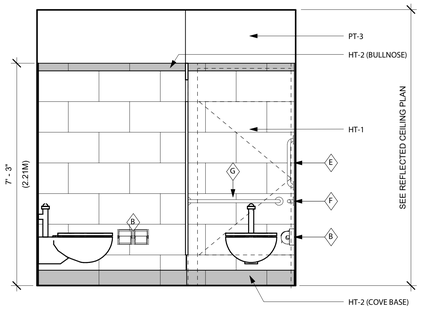

3 / A6.1 Men's Latrine 140 Elevation 2 (BASE BID)
1/2" = 1'-0"

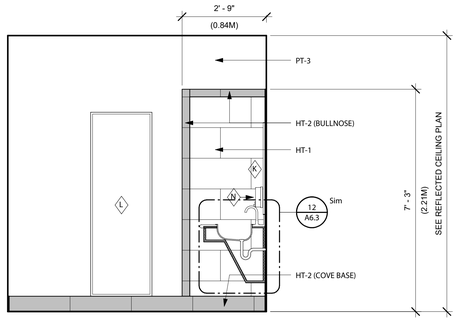

4 / A6.1 Men's Latrine 140 Elevation 3 (BASE BID)
1/2" = 1'-0"

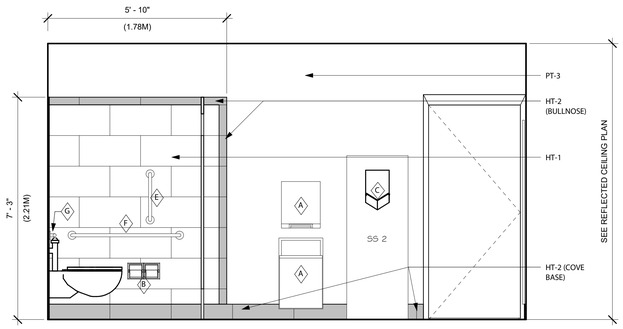

5 / A6.1 Men's Latrine 140 Elevation 4 (BASE BID)
1/2" = 1'-0"

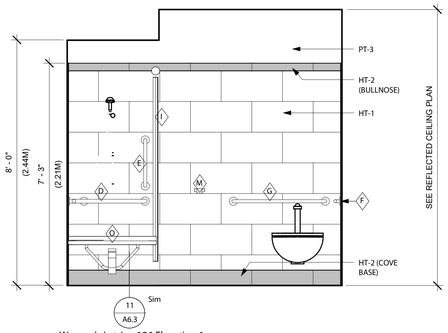

6 / A6.1 Women's Latrine 126 Elevation 1 (BASE BID)
1/2" = 1'-0"

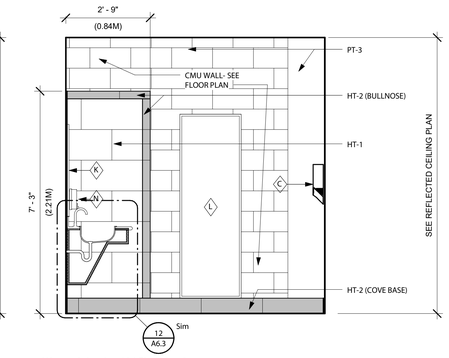

7 / A6.1 Women's Latrine 126 Elevation 2 (BASE BID)
1/2" = 1'-0"

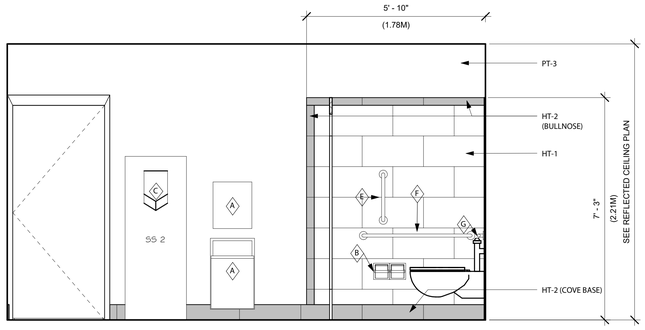

8 / A6.1 Women's Latrine 126 Elevation 3 (BASE BID)
1/2" = 1'-0"

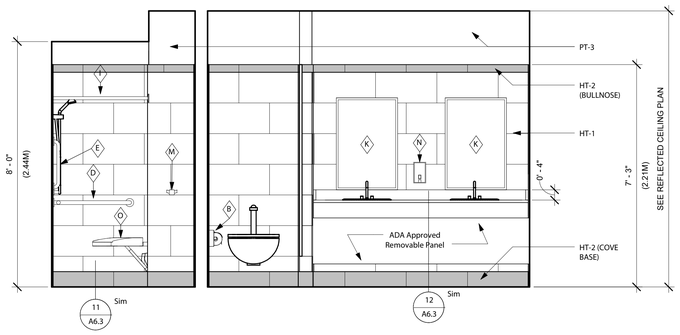

9 / A6.1 Women's Latrine 126 Elevation 4 (BASE BID)
1/2" = 1'-0"

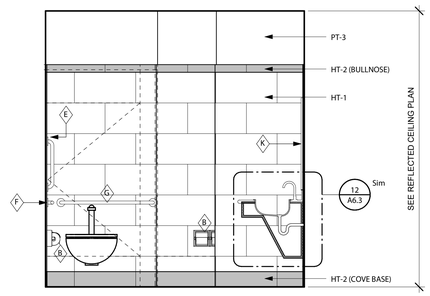

10 / A6.1 Women's Latrine 126 Elevation 5 (BASE BID)
1/2" = 1'-0"

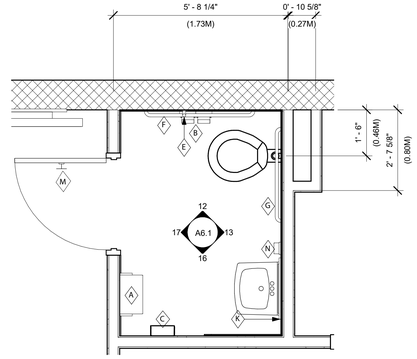

FLOOR TILE PATTERN OMITTED FOR CLARITY. REFER TO A9.1.
REFER TO 11/A6.2 FOR BID OPTION.

11 / A6.1 BDOC Latrine 140 Floor Plan (BASE BID)
1/2" = 1'-0"

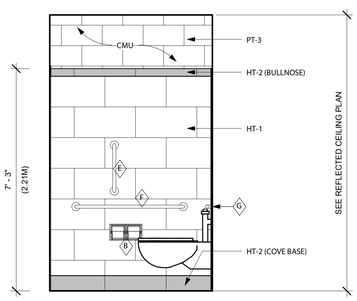

12 / A6.1 BDOC RESTROOM ELEVATION 1 (BASE BID)
1/2" = 1'-0"

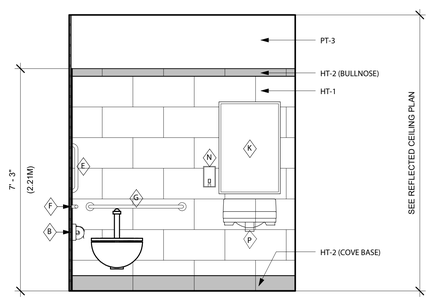

13 / A6.1 BDOC RESTROOM ELEVATION 2 (BASE BID)
1/2" = 1'-0"

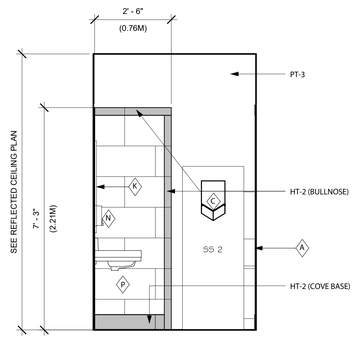

16 / A6.1 BDOC RESTROOM ELEVATION 3 (BASE BID)
1/2" = 1'-0"

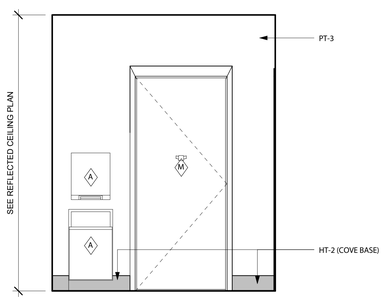

17 / A6.1 BDOC RESTROOM ELEVATION 4 (BASE BID)
1/2" = 1'-0"

SS&L
ARCHITECTURE & INTERIOR DESIGN
1135 South Coosa River Parkway, AL 35004
Tel. 334. 263. 5102 | WWW.SSLARCH.COM

Rev.	Description	Date

Job Number
12072

Date
JUNE 2024

Drawn By
JJ, NB, DCD, JBW, DOB

Checked By
DCD

Project Title

New Security Building
117th Air Refueling Wing
Birmingham, AL

Sheet Title
Enlarged Floor Plans & Interior Elevations (Base Bid)

Sheet Number
A6.1

STATE OF ALABAMA
MONTGOMERY
Jim S. Seay, Jr.
1544
Gregory A. O'Neal
4043
Wesley S. Carter
4544
ALABAMA
REGISTERED ARCHITECTS

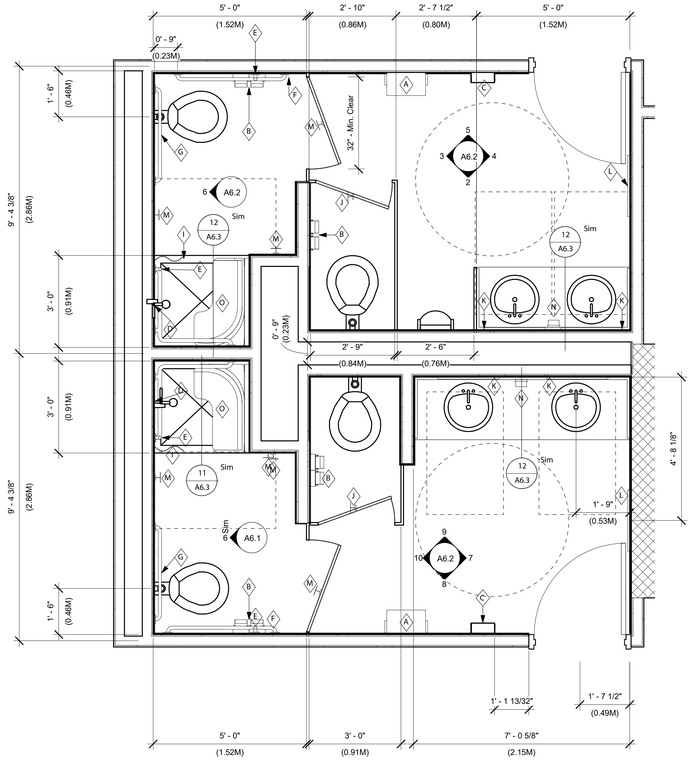

FLOOR TILE PATTERN OMITTED FOR CLARITY. REFER TO A9.1.

1 / A6.2 Enlarged Floor Plan Copy 1
1/2" = 1'-0"

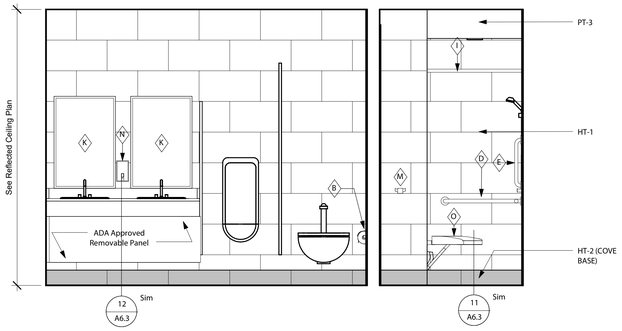

2 / A6.2 Men's Latrine 140 Elevation 1 (BID OPTION)
1/2" = 1'-0"

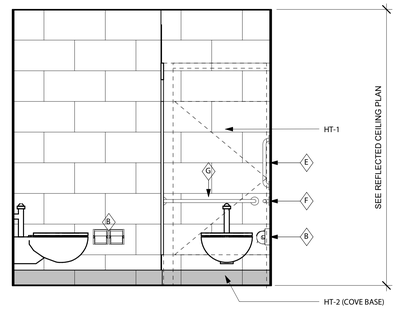

3 / A6.2 Men's Latrine 140 Elevation 2 (BID OPTION)
1/2" = 1'-0"

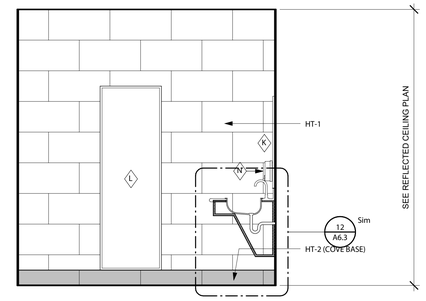

4 / A6.2 Men's Latrine 140 Elevation 3 (BID OPTION)
1/2" = 1'-0"

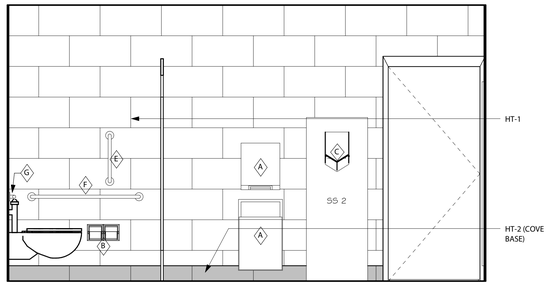

5 / A6.2 Men's Latrine 140 Elevation 4 (BID OPTION)
1/2" = 1'-0"

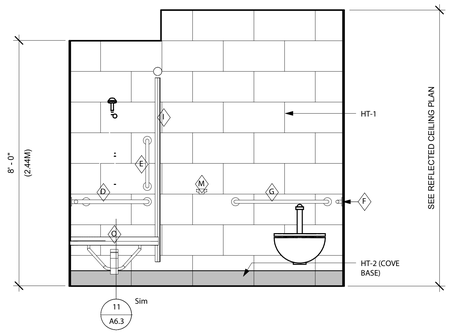

6 / A6.2 Women's Latrine 126 Elevation 1 (BID OPTION)
1/2" = 1'-0"

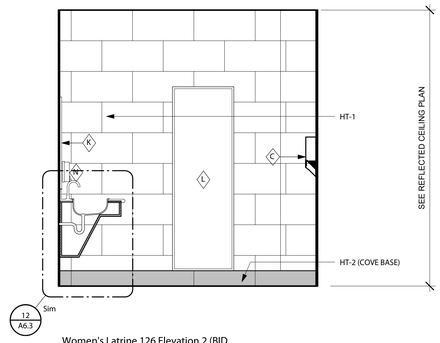

7 / A6.2 Women's Latrine 126 Elevation 2 (BID OPTION)
1/2" = 1'-0"

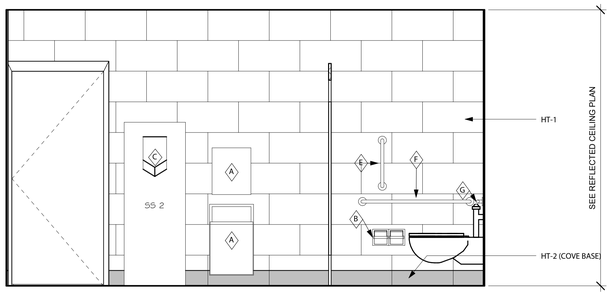

8 / A6.2 Women's Latrine 126 Elevation 3 (BID OPTION)
1/2" = 1'-0"

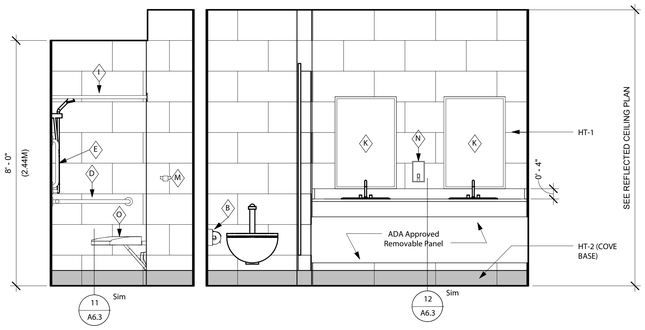

9 / A6.2 Women's Latrine 126 Elevation 4 (BID OPTION)
1/2" = 1'-0"

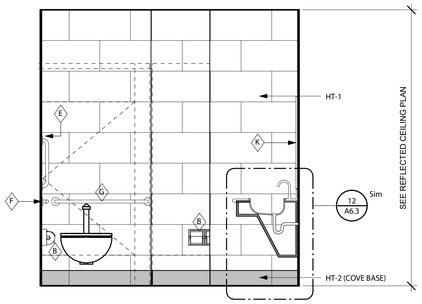

10 / A6.2 Women's Latrine 126 Elevation 5 (BID OPTION)
1/2" = 1'-0"

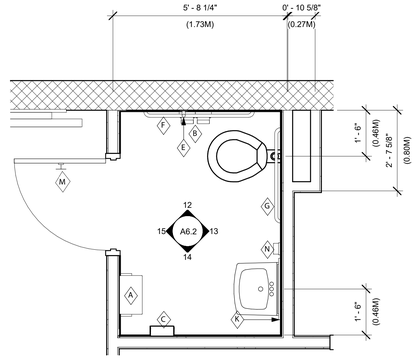

FLOOR TILE PATTERN OMITTED FOR CLARITY. REFER TO A9.1.

11 / A6.2 BDOC Latrine 140 Floor Plan (BID OPTION)
1/2" = 1'-0"

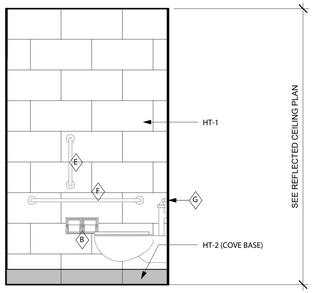

12 / A6.2 BDOC RESTROOM ELEVATION 1 (BID OPTION)
1/2" = 1'-0"

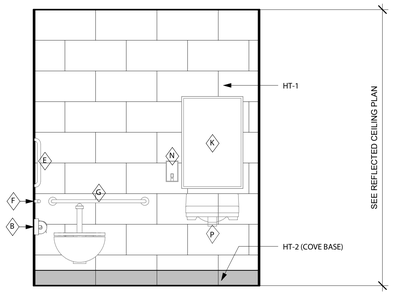

13 / A6.2 BDOC RESTROOM ELEVATION 2 (BID OPTION)
1/2" = 1'-0"

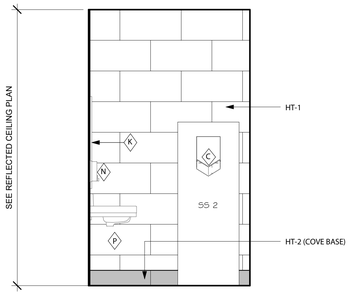

14 / A6.2 BDOC RESTROOM ELEVATION 3 (BID OPTION)
1/2" = 1'-0"

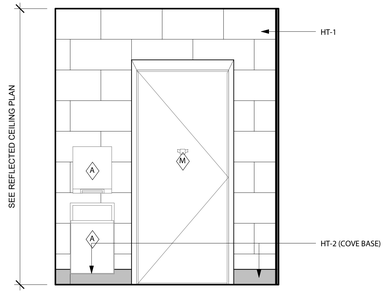

15 / A6.2 BDOC RESTROOM ELEVATION 4 (BID OPTION)
1/2" = 1'-0"

S|S&L
ARCHITECTURE & INTERIOR DESIGN
1115 South Court Square | Montgomery, AL 36104
Tel. 334. 263. 5102 | WWW.SSLARCH.COM

Rev.	Description	Date

Job Number
12072

Date
JUNE 2024

Drawn By
JJ, NB, DCD, JBW, DOB

Checked By
DCD

Project Title

New Security Building
117th Air Refueling Wing
Birmingham, AL

Sheet Title
Enlarged Floor Plans & Interior Elevations (Bid Option)

Sheet Number
A6.2

STATE OF ALABAMA
MONTGOMERY
Jim H. Sorrer, Jr.
1544
Gregory A. O'Neal
4010
Wesley S. Carrie
4244
ALABAMA
REGISTERED ARCHITECTS

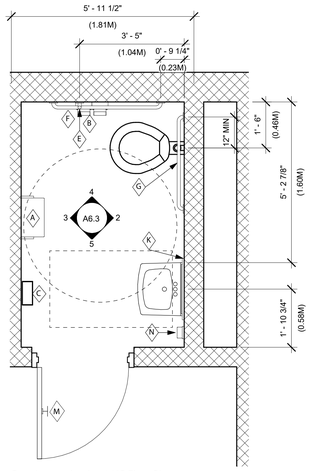

1 A6.3 Guardmount Latrine 148B Floor Plan (BASE BID)
1/2" = 1'-0"

REFER TO G/AG.3 FOR BID OPTION.

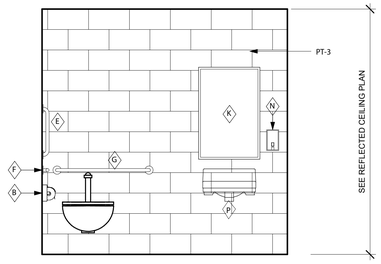

2 A6.3 GUARDMOUNT LATRINE 148B ELEVATION 1 (BASE BID)
1/2" = 1'-0"

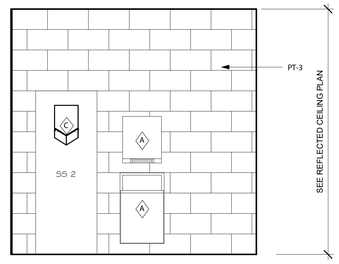

3 A6.3 GUARDMOUNT LATRINE 148B ELEVATION 2 (BASE BID)
1/2" = 1'-0"

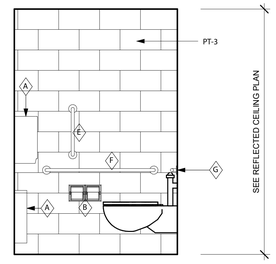

4 A6.3 GUARDMOUNT LATRINE 148B ELEVATION 3(BASE BID)
1/2" = 1'-0"

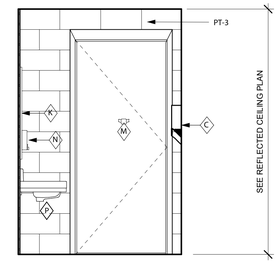

5 A6.3 GUARDMOUNT LATRINE 148B ELEVATION 4 (BASE BID)
1/2" = 1'-0"

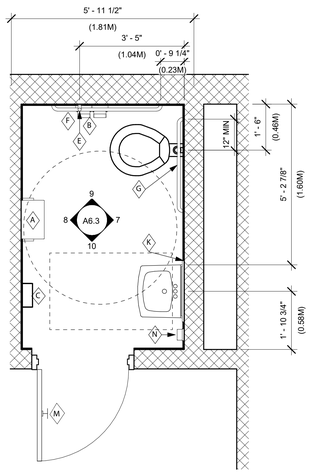

6 A6.3 Guardmount Latrine 148B Floor Plan (BID OPTION)
1/2" = 1'-0"

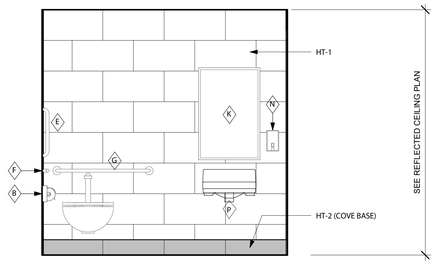

7 A6.3 GUARDMOUNT LATRINE 148B ELEVATION 1 (BID OPTION)
1/2" = 1'-0"

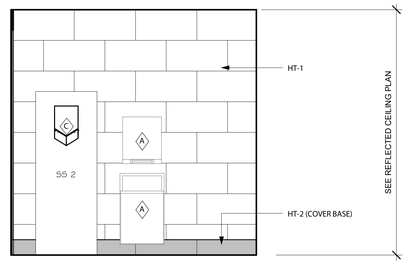

8 A6.3 GUARDMOUNT LATRINE 148B ELEVATION 2 (BID OPTION)
1/2" = 1'-0"

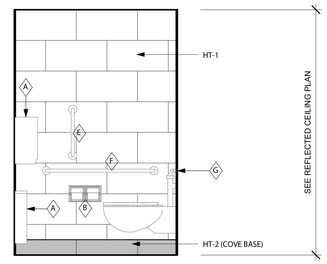

9 A6.3 GUARDMOUNT LATRINE 148B ELEVATION 3(BID OPTION)
1/2" = 1'-0"

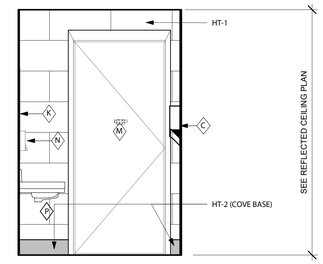

10 A6.3 GUARDMOUNT LATRINE 148B ELEVATION 4 (BID OPTION)
1/2" = 1'-0"

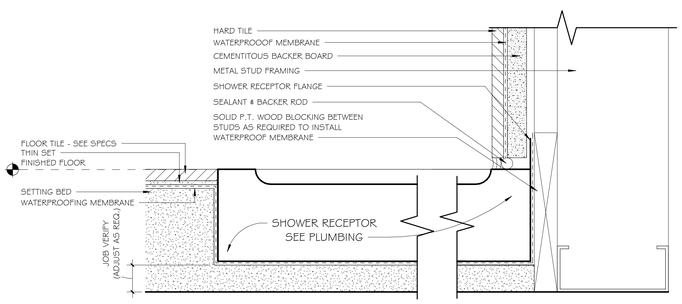

11 A6.3 SHOWER RECEPTOR DETAIL
6" = 1'-0"

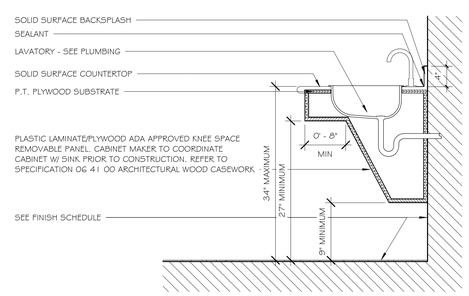

12 A6.3 ADA SINK DETAIL
1" = 1'-0"

S|S&L
ARCHITECTURE & INTERIOR DESIGN
113 South Court Street | Montgomery, AL 36104
Tel 334.263.5102 | WWW.SSLARCH.COM

Rev.	Description	Date

Job Number
12072

Date
JUNE 2024

Drawn By
JJ, NB, DCD, JBW, DOB

Checked By
DCD

Project Title

New Security Building
117th Air Refueling Wing
Birmingham, AL

Sheet Title
Enlarged Floor Plans & Interior Elevations

Sheet Number
A6.3

STATE OF ALABAMA
MONTGOMERY
Tim L. Sartin, Jr.
1686
Gregory A. O'Neal
4043
Wesley S. Cramer
4244
ALABAMA
REGISTERED ARCHITECTS

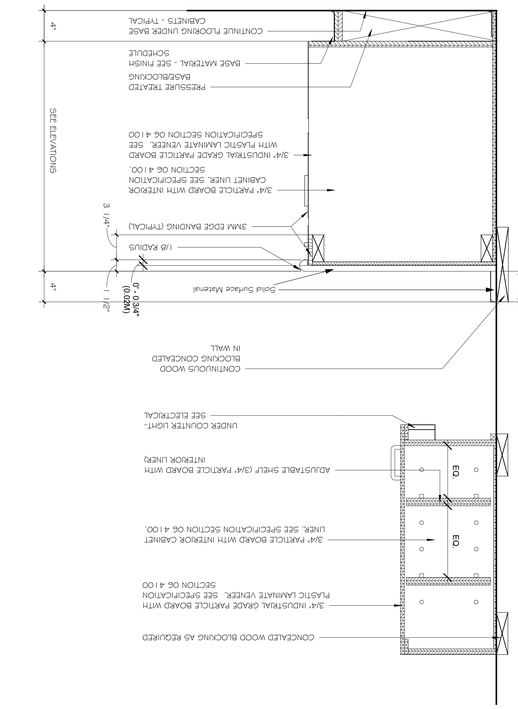

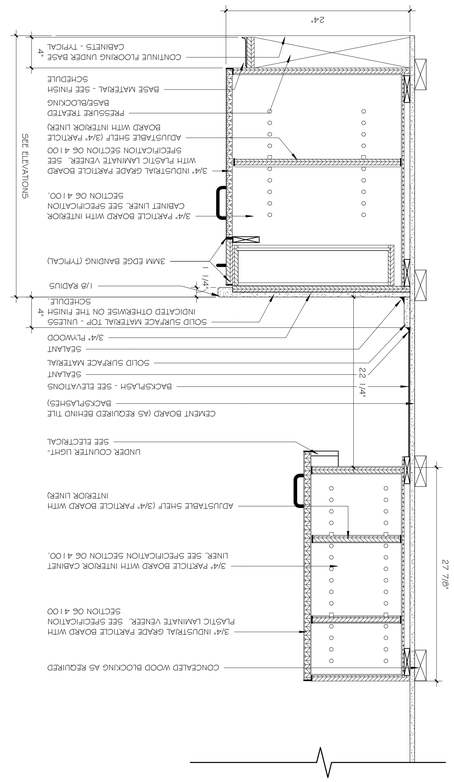

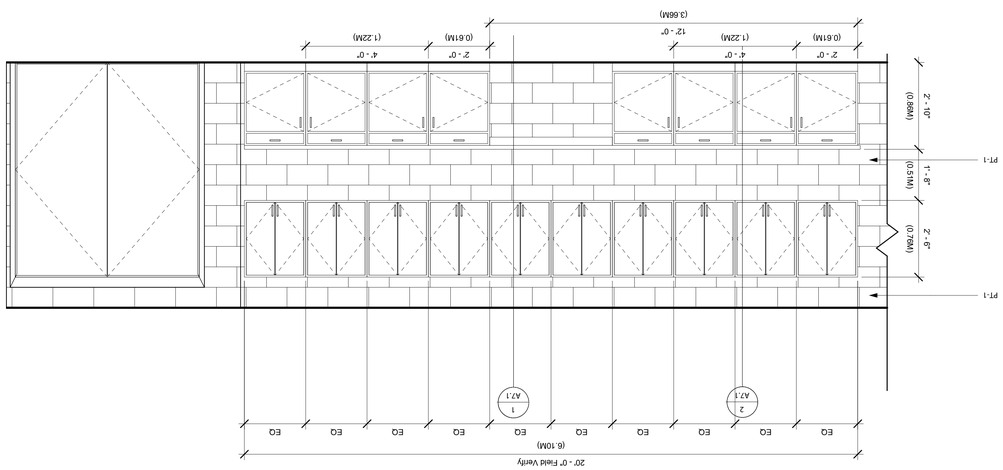

20' - 0" Field Verify
(6.10M)
EQ
EQ
EQ
EQ
EQ
EQ
EQ
EQ
EQ
EQ
2
A7.1
1
A7.1
PT-1
PT-1
2' - 6"
(0.76M)
1' - 8"
(0.51M)
2' - 10"
(0.86M)
2' - 0"
(0.61M)
4' - 0"
(1.22M)
12' - 0"
(3.66M)
2' - 0"
(0.61M)
4' - 0"
(1.22M)

4
A7.1
Guardmount Cabinet Elevation
1/2" = 1'-0"

10' - 2 1/8" - Field Verify
(3.10M)
EQ
3' - 0"
(0.91M)
EQ
EQ
1' - 0"
(0.30M)
PNT-1
2
A7.1
HT-3
12
A6.3
Sim
REF
(CFCI)
MICROWAVE
(CFCI)
ADA Knee Space Removable Panel
2' - 6"
(0.76M)
1' - 8"
(0.51M)
2' - 10"
(0.86M)
EQ
EQ
1' - 0"
(0.30M)
0' - 3 5/8"
(0.09M)

3
A7.1
Break Room Cabinet Elevation
1/2" = 1'-0"

CONCEALED WOOD BLOCKING AS REQUIRED
3/4" INDUSTRIAL GRADE PARTICLE BOARD WITH PLASTIC LAMINATE VENEER. SEE SPECIFICATION SECTION 06 4100
3/4" PARTICLE BOARD WITH INTERIOR CABINET LINER. SEE SPECIFICATION SECTION 06 4100.
ADJUSTABLE SHELF (3/4" PARTICLE BOARD WITH INTERIOR LINER)
UNDER COUNTER LIGHT- SEE ELECTRICAL
CEMENT BOARD (AS REQUIRED BEHIND TILE BACKSPLASHES)
BACKSPLASH - SEE ELEVATIONS
SEALANT
SOLID SURFACE MATERIAL
SEALANT
3/4" PLYWOOD
SOLID SURFACE MATERIAL TOP - UNLESS INDICATED OTHERWISE ON THE FINISH SCHEDULE.
1/8 RADIUS
3MM EDGE BANDING (TYPICAL)
3/4" PARTICLE BOARD WITH INTERIOR CABINET LINER. SEE SPECIFICATION SECTION 06 4100.
3/4" INDUSTRIAL GRADE PARTICLE BOARD WITH PLASTIC LAMINATE VENEER. SEE SPECIFICATION SECTION 06 4100
ADJUSTABLE SHELF (3/4" PARTICLE BOARD WITH INTERIOR LINER)
PRESSURE TREATED BASE/BLOCKING
BASE MATERIAL - SEE FINISH SCHEDULE
CONTINUE FLOORING UNDER BASE CABINETS - TYPICAL
27 7/8"
22 1/4"
4"
1 1/4"
SEE ELEVATIONS
4"
24"

2
A7.1
SOLID SURFACE CABINET WITH UPPERS
1 1/2" = 1'-0"

CONCEALED WOOD BLOCKING AS REQUIRED
3/4" INDUSTRIAL GRADE PARTICLE BOARD WITH PLASTIC LAMINATE VENEER. SEE SPECIFICATION SECTION 06 4100
3/4" PARTICLE BOARD WITH INTERIOR CABINET LINER. SEE SPECIFICATION SECTION 06 4100.
EQ.
EQ.
ADJUSTABLE SHELF (3/4" PARTICLE BOARD WITH INTERIOR LINER)
UNDER COUNTER LIGHT- SEE ELECTRICAL
CONTINUOUS WOOD BLOCKING CONCEALED IN WALL
0' - 4"
(0.10M)
Solid Surface Material
0' - 0 3/4"
(0.02M)
1 1/2"
4"
1/8 RADIUS
3MM EDGE BANDING (TYPICAL)
3 1/4"
3/4" PARTICLE BOARD WITH INTERIOR CABINET LINER. SEE SPECIFICATION SECTION 06 4100.
3/4" INDUSTRIAL GRADE PARTICLE BOARD WITH PLASTIC LAMINATE VENEER. SEE SPECIFICATION SECTION 06 4100
SEE ELEVATIONS
PRESSURE TREATED BASE/BLOCKING
BASE MATERIAL - SEE FINISH SCHEDULE
CONTINUE FLOORING UNDER BASE CABINETS - TYPICAL
4"

1
A7.1
Cabinet Detail Through Knee Space
1 1/2" = 1'-0"

SS&L
ARCHITECTURE & INTERIOR DESIGN
1115 South Court Street | Montgomery, AL 36104
Tel. 334. 263. 5162 | **WWW.SSLARCH.COM**

Rev.	Description	Date

Job Number
12072

Date
JUNE 2024

Drawn By
JJ, NB, DCD, JBW, DOB

Checked By
DCD

Project Title

New Security Building
117th Air Refueling Wing
Birmingham, AL

Sheet Title
Cabinet Elevations

Sheet Number
A7.1

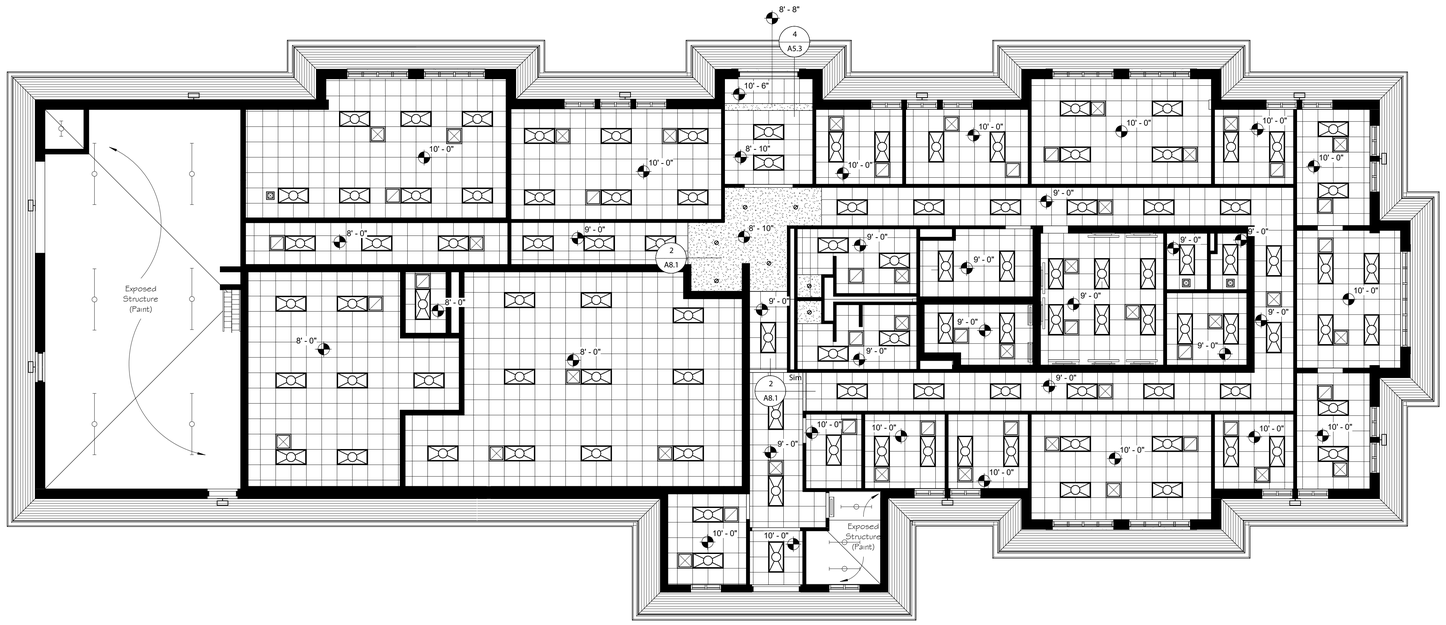

1 A8.1 Reflected Ceiling Plan (Base Bid)
1/8" = 1'-0"

GENERAL NOTES:

1. REFER TO SPECIFICATION SECTION 01 2300 FOR DESCRIPTION OF BID OPTION.

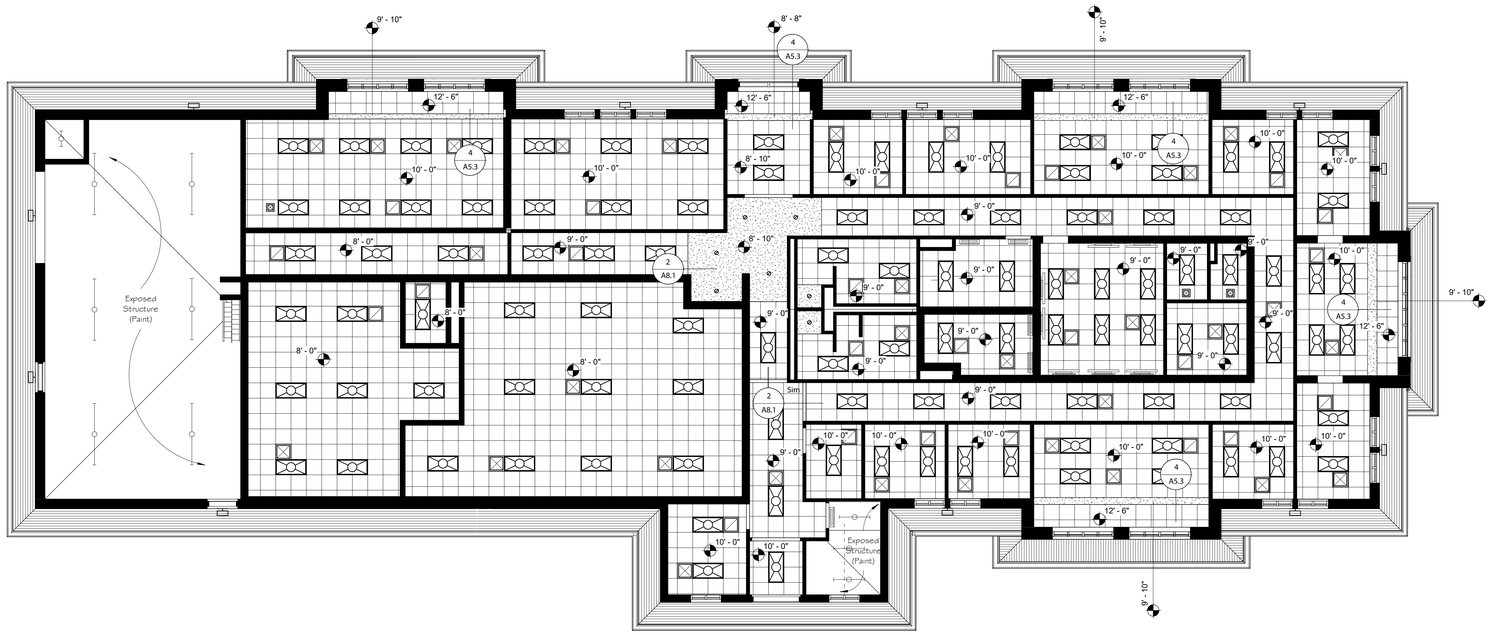

3 A8.1 Reflected Ceiling Plan (Bid Option)
1/8" = 1'-0"

Acoustical Tile Ceiling

Gypsum Board Ceiling Paint with PNT5

Metal Soffit Panels

1 A101 Detail Tag

Return Air (See Mechanical)

Supply Air (See Mechanical)

Recessed Flourescent Fixture (See Electrical)

Surface Mounted Flourescent Fixture (See Electrical)

Recessed Can Light (See Electrical)

Ceiling Legend
1/4" = 1'-0"

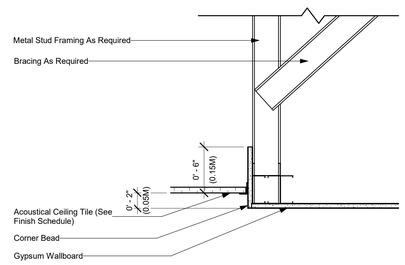

2 A8.1 Ceiling Joint Detail
1 1/2" = 1'-0"

S|S&L
ARCHITECTURE & INTERIOR DESIGN
1115 South Court Square | Montgomery, AL 36104
Tel 334.263.5162 | WWW.SSLARCH.COM

Rev.	Description	Date

Job Number
12072

Date
JUNE 2024

Drawn By
JJ, NB, DCD, JBW, DOB

Checked By
DCD

Project Title

New Security Building
117th Air Refueling Wing
Birmingham, AL

Sheet Title
Reflected Ceiling Plan

Sheet Number
A8.1

STATE OF ALABAMA
MONTGOMERY
Jim S. Seay, Jr.
1644
Gregory A. O'Neal
4043
Wesley S. Carter
4344
ALABAMA
REGISTERED ARCHITECTS

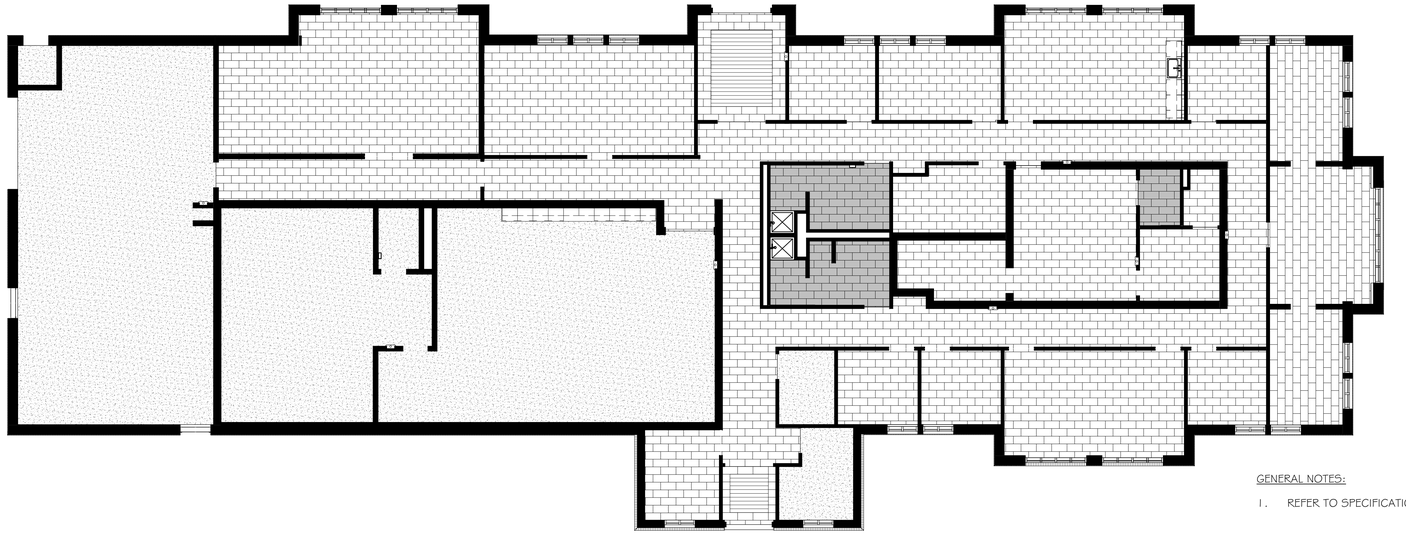

1 / A9.1 Floor Pattern Plan (Base Bid)
1/8" = 1'-0"

FLOOR PATTERN LEGEND

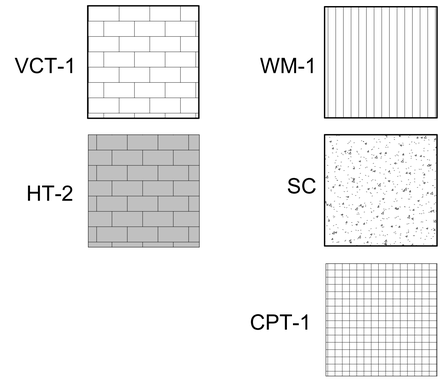

GENERAL NOTES:

1. REFER TO SPECIFICATION SECTION 01 2300 FOR DESCRIPTION OF BID OPTION.

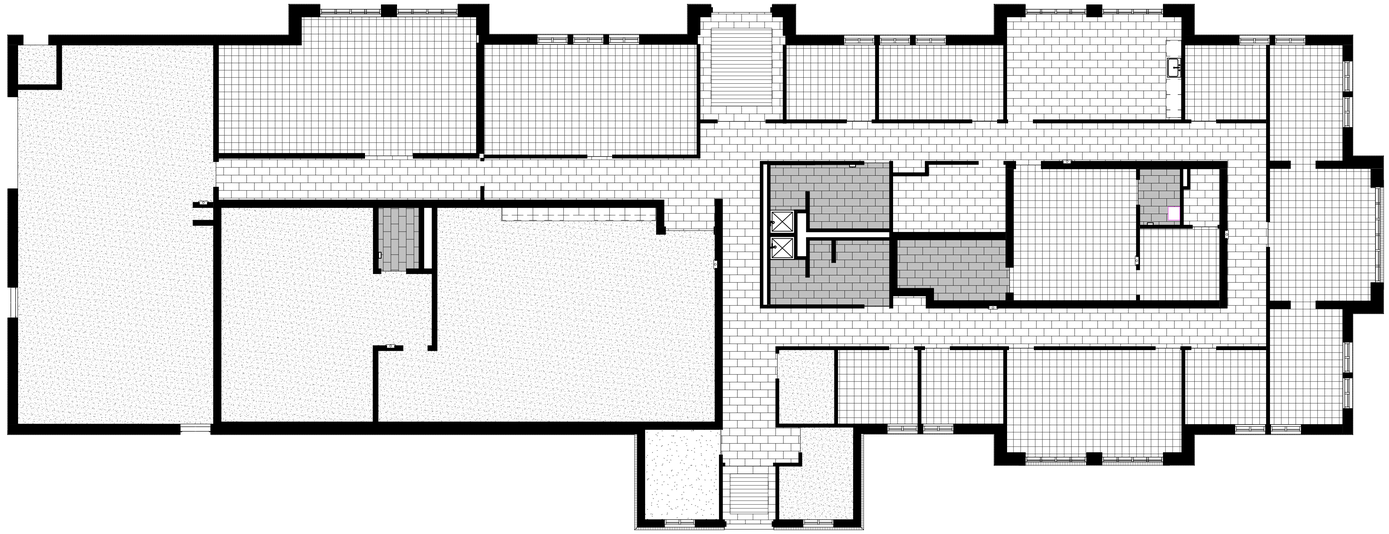

7 / A9.1 Floor Pattern Plan (Bid Option)
1/8" = 1'-0"

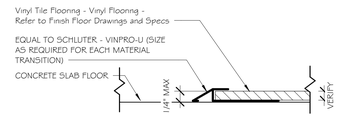

8 / A9.1 CONCRETE TO LVT/VCT TRANSITION
1" = 1'-0"

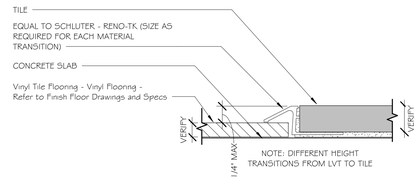

10 / A9.1 TILE TO LVT/VCT TRANSITION
1" = 1'-0"

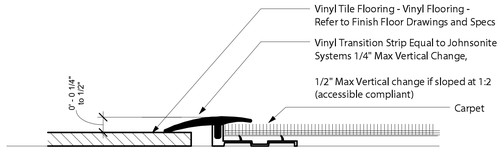

2 / A9.1 CARPET TO LVT/VCT TRANSITION
12" = 1'-0"

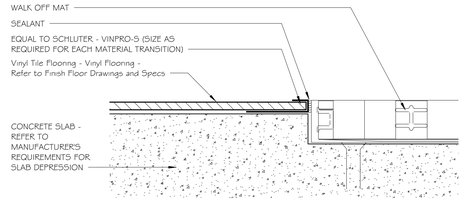

6 / A9.1 WALK OFF MAT TO LVT/VCT TRANSITION
12" = 1'-0"

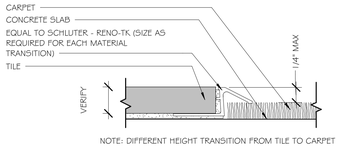

9 / A9.1 TILE TO CARPET TRANSITION
1" = 1'-0"

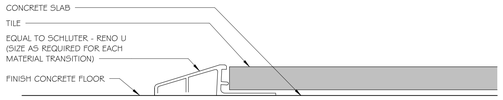

12 / A9.1 CONCRETE TO TILE TRANSITION
12" = 1'-0"

SS&L
ARCHITECTURE & INTERIOR DESIGN
1135 South Court Street | Montgomery, AL 36104
Tel 334.263.5102 | WWW.SSLARCH.COM

Rev.	Description	Date

Job Number
12072

Date
JUNE 2024

Drawn By
JJ, NB, DCD, JBW, DOB

Checked By
DCD

Project Title

New Security Building

117th Air Refueling Wing
Birmingham, AL

Sheet Title
Floor Pattern Plan

Sheet Number
A9.1

STATE OF ALABAMA
MONTGOMERY
Jim S. Sevy, Jr.
1966
Gregory A. O'Neal
6010
Wesley S. Carter
6244
ALABAMA
REGISTERED ARCHITECTS

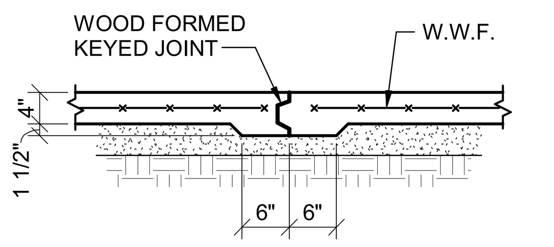

TYPICAL SLAB CONSTRUCTION JOINT DETAIL-(C.J.)

NOTE:
IF SAWED JOINTS ARE USED, JOINTS MUST BE SAWED SAME DAY AS SLAB POUR.

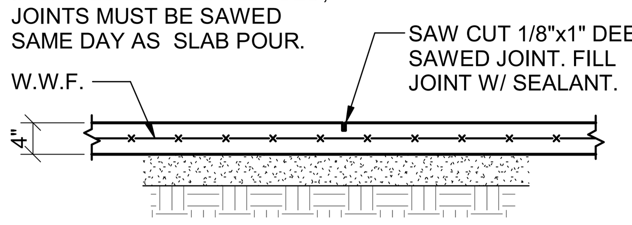

ALTERNATE SLAB CONSTRUCTION JOINT DETAIL (SAWED JOINT)

NOTE:
PROVIDE A TYPICAL THICKENED SLAB UNDER ALL C.M.U. PARTITIONS NOT BEARING ON A FTG. OR GRADE BEAM.

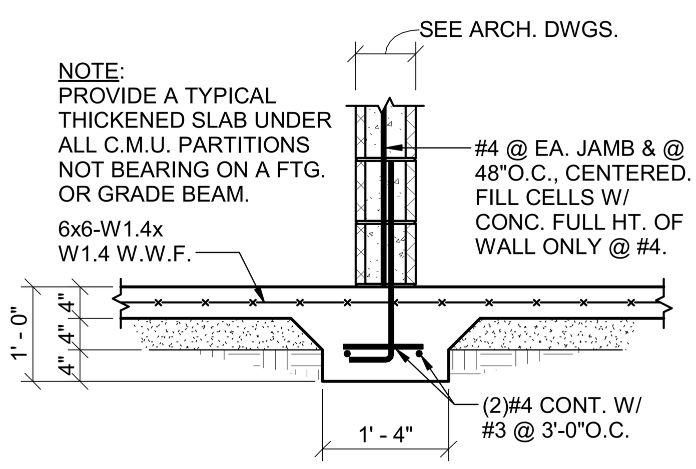

TYPICAL THICKENED SLAB DETAIL

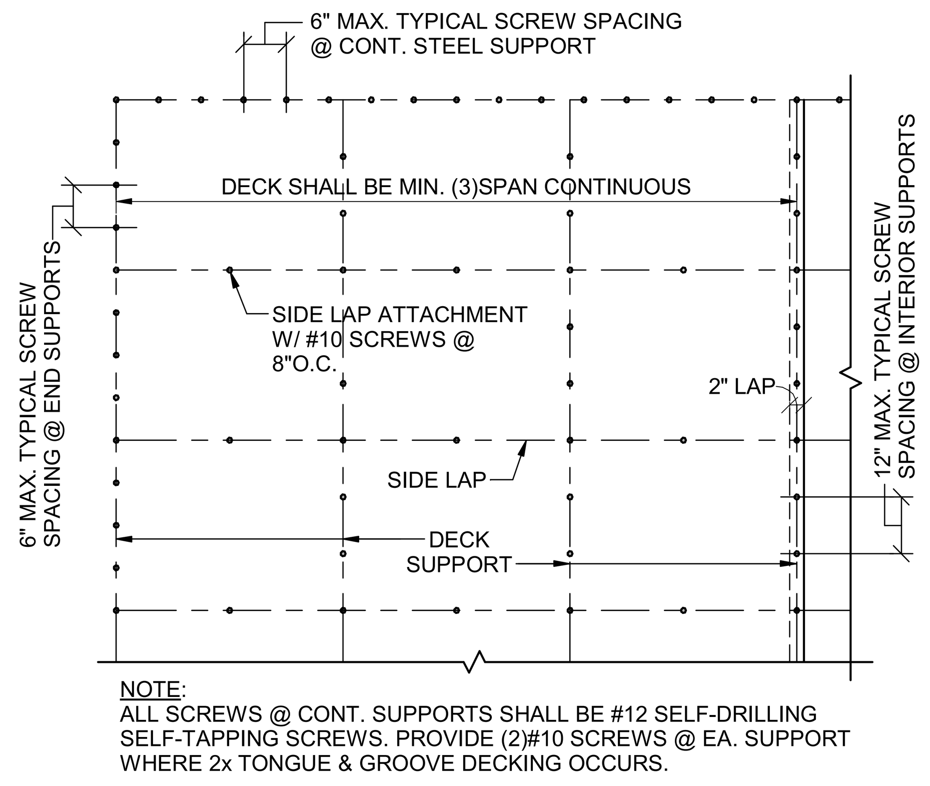

NOTE:
ALL SCREWS @ CONT. SUPPORTS SHALL BE #12 SELF-DRILLING SELF-TAPPING SCREWS. PROVIDE (2)#10 SCREWS @ EA. SUPPORT WHERE 2x TONGUE & GROOVE DECKING OCCURS.

TYPICAL ROOF DECK FASTENING REQUIREMENTS
NO SCALE

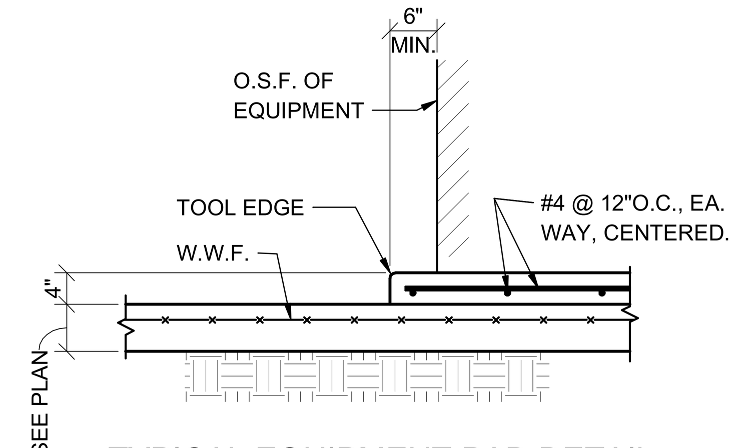

TYPICAL EQUIPMENT PAD DETAIL

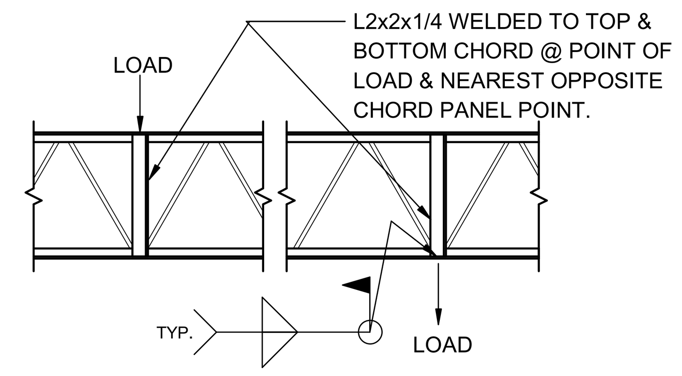

TYPICAL JOIST WHERE LOAD IS ADDED OTHER THAN AT PANEL POINT

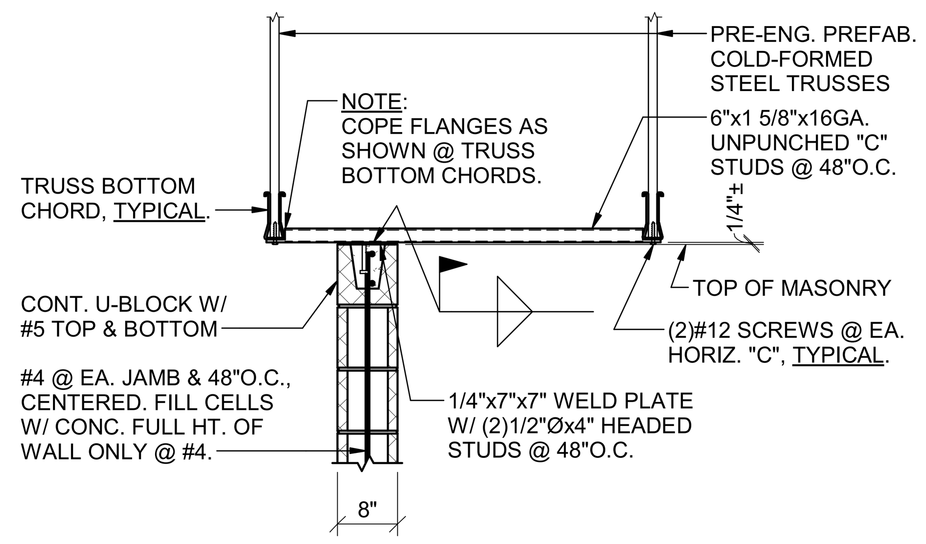

WALL PARALLEL TO TRUSSES

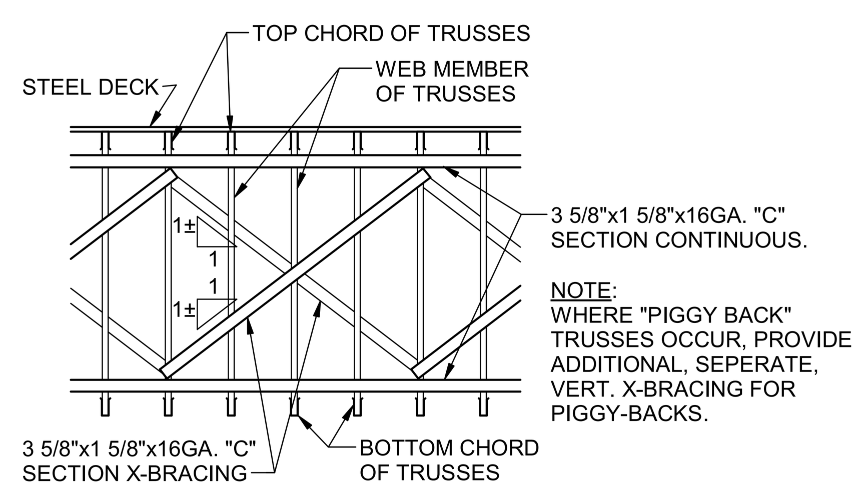

TYPICAL 'X'-BRACING DETAIL

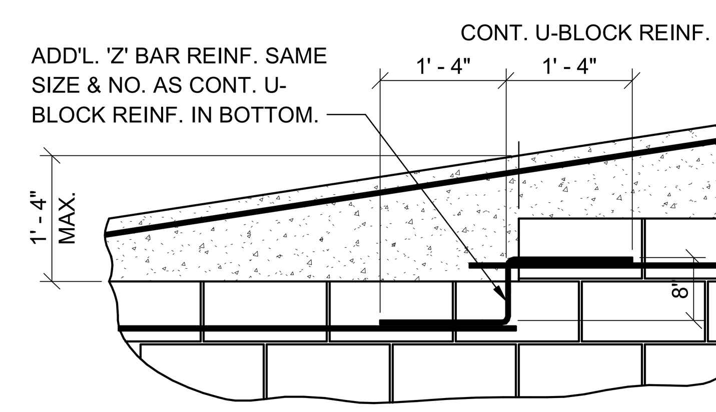

TYPICAL U-BLOCK STEP DETAIL

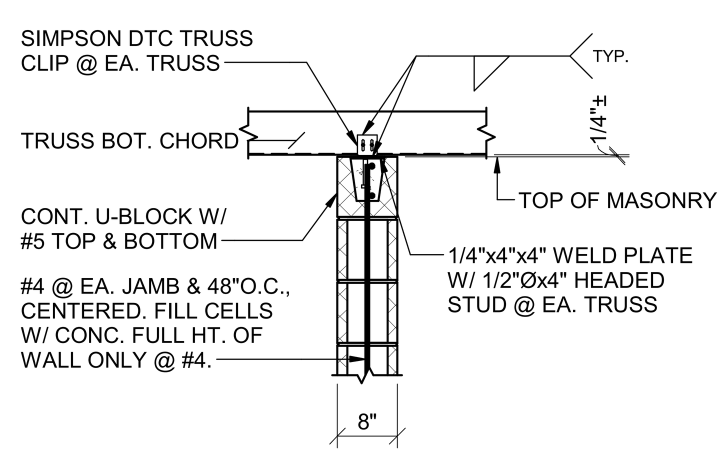

WALL PERPENDICULAR TO TRUSSES

TYPICAL NON-BEARING C.M.U. WALL ANCHORAGE DETAIL AT COLD-FORMED STEEL TRUSSES

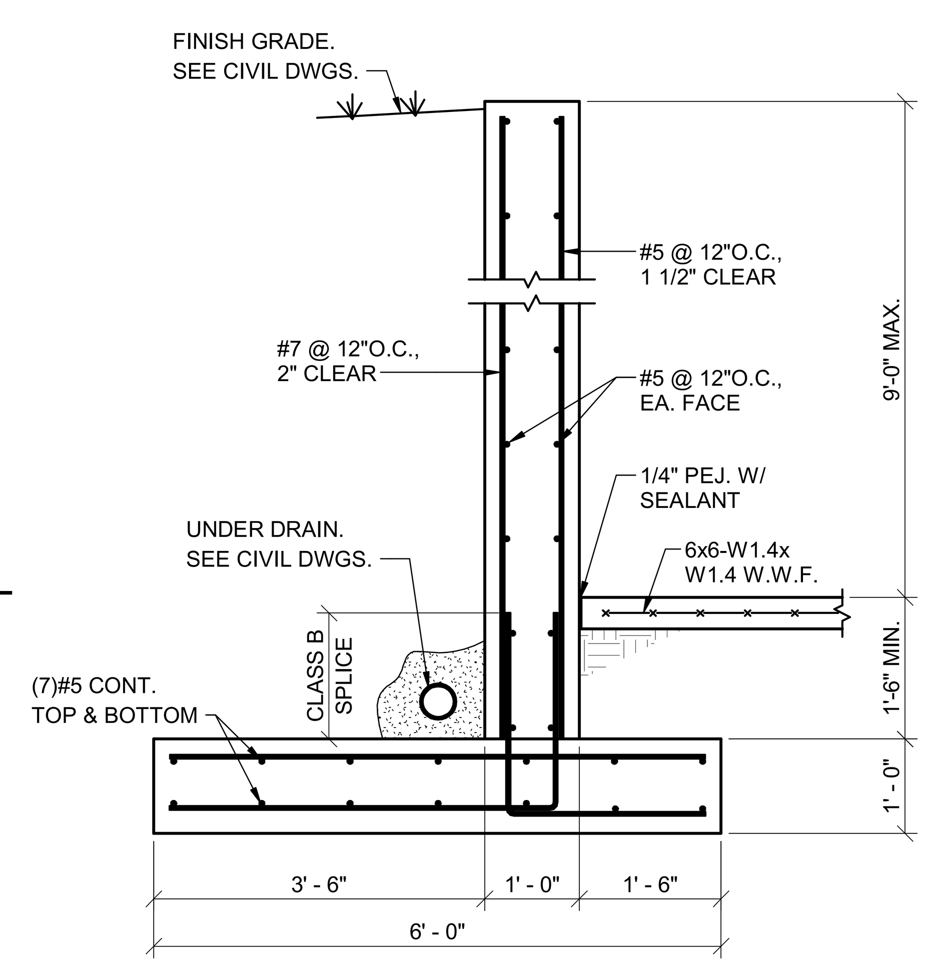

TYPICAL RETAINING WALL SECTION
(SEE CIVIL DWGS. FOR LOCATION)

BEARING & BASE PLATE SCHEDULE			
MARK	PLATE SIZE	PLATE TYPE	ANCHOR BOLT NO. & SIZE
BP-1	3/4"x10"x10"	A	(4)3/4"Øx16" HEADED
BP-2	3/4"x11"x16"	B & C	(2)3/4"Øx14" HEADED
BP-3	3/4"x7"x16"	B & C	(2)3/4"Øx14" HEADED
BP-4	1 1/4"x7"x16"	B & C	(2)3/4"Øx14" HEADED

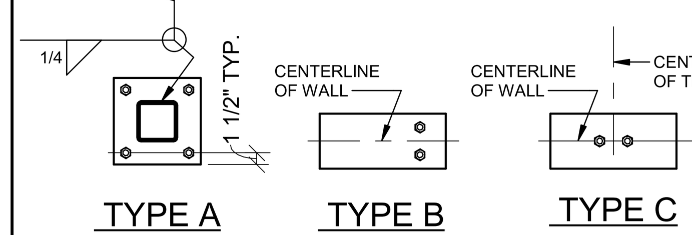

BASE PLATE TYPES

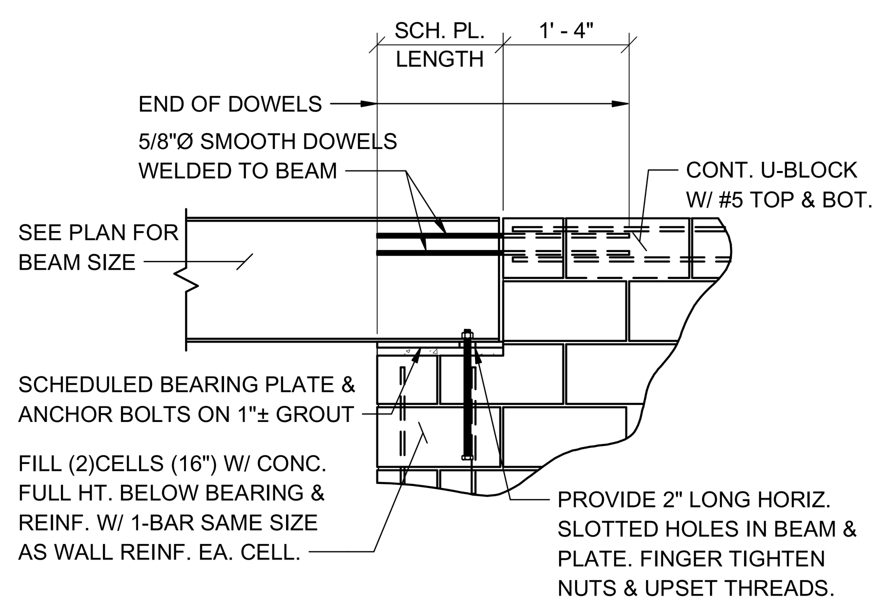

TYPICAL BEAM BEARING ON C.M.U. WALL DETAIL (PARALLEL)

Lintel Schedule					
Mark or Location	Max. Span	Type	Size	Reinforcing	Remarks
8"C.M.U.	3'-4"	U-BLOCK	8x8	#5 TOP & BOTTOM	8" HIGH U-BLOCK
8"C.M.U.	6'-4"	U-BLOCK	8x16	(2)#5 TOP & BOTTOM	16" HIGH U-BLOCK
8"C.M.U.	8'-8"	U-BLOCK	8x24	(2)#5 TOP & BOTTOM	24" HIGH U-BLOCK
8"C.M.U.	13'-4"	REINF. CONC. BEAM	7 5/8x16	(2)#5 TOP & BOTTOM W/ #3 @ 6"O.C.	SEE NOTE 4
12"C.M.U.	3'-4"	U-BLOCK	12x8	(2)#5 TOP & BOTTOM	8" HIGH U-BLOCK
12"C.M.U.	8'-0"	U-BLOCK	12x16	(2)#5 TOP & BOTTOM	16" HIGH U-BLOCK
BRICK	6'-4"	STEEL ANGLE	L6x4x5/16		BEAR 8" EA. END
BRICK	10'-0"	STEEL ANGLE	L7x4x3/8		BEAR 16" EA. END

NOTES:
1. BEAR 8" HIGH U-BLOCKS 8" EACH END & 16" & 24" HIGH U-BLOCKS 16" EACH END.
2. FILL CELLS W/ CONCRETE FULL HEIGHT @ U-BLOCK BEARING FOR ENTIRE LENGTH OF BEARING & REINFORCE EACH CELL W/ BAR SAME SIZE AS WALL REINFORCING. VERTICAL REINFORCING SHALL BE CONTINUOUS THRU LINTEL @ BEARING.
3. FILL CELLS OF U-BLOCK LINTEL TO FULL HEIGHT IN ONE POUR.
4. BEAR CONC. BEAMS 16" EA. END. USE REINF. BAR EA. FACE (8"O.C. = 4 BARS TOTAL EA. JAMB). SEE TYP. JAMB CONDITION @ CONC. BEAM LINTELS THIS SHEET.

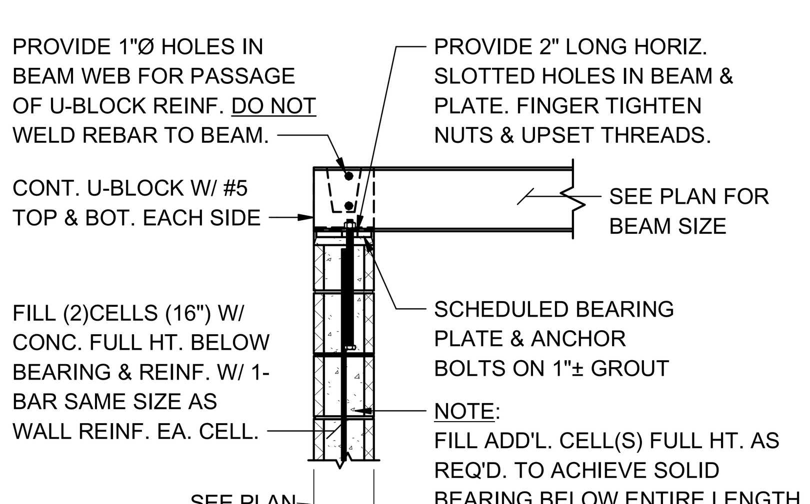

TYPICAL BEAM BEARING ON C.M.U. WALL DETAIL (PERPENDICULAR)

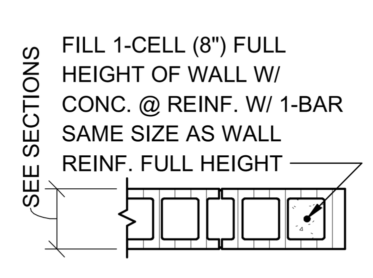

JAMB AT LINTELS BEARING 8"

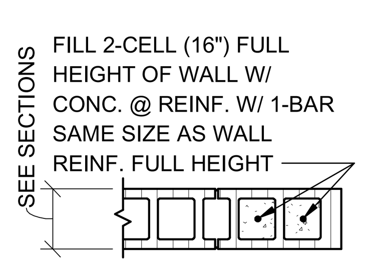

JAMB AT LINTELS BEARING 16"

NOTE:
ALL JAMB REINF. SHALL BE CONT. THRU LINTEL. MAINTAIN 3" VERT. BAR SPACING WHERE LINTEL HORIZ. REINF. PASSES BETWEEN VERT. BARS. MAINTAIN 1" CLEARANCE BETWEEN BEAM HORIZ. BARS.

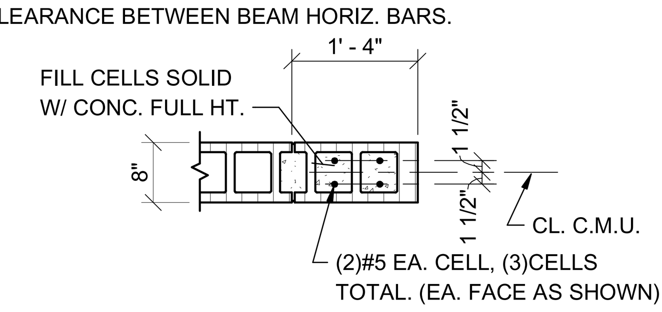

TYPICAL JAMB CONDITION @ CONC. BEAM LINTELS

TYPICAL JAMB REINFORCING DETAILS
(UNLESS NOTED OTHERWISE ON DRAWINGS)

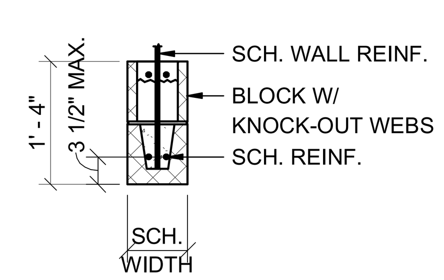

16" HIGH U-BLOCK

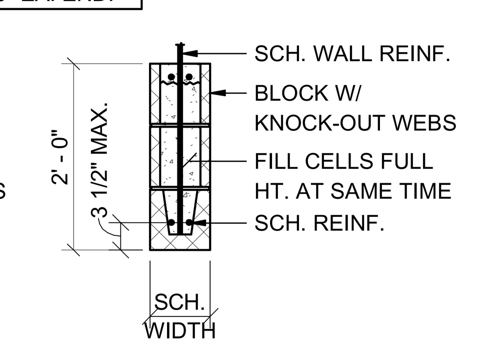

24" HIGH U-BLOCK

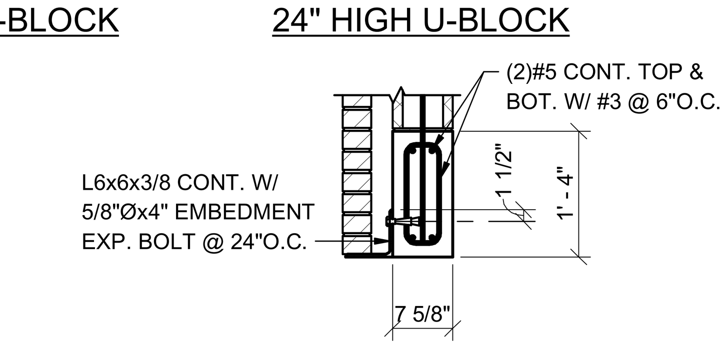

16" DEEP CONC. LINTEL

GENERAL NOTES

FOUNDATION:
1. THE BEARING STRATA OF ALL FOOTINGS AND GRADE BEAMS SHALL BE INSPECTED AND APPROVED BY THE SOILS TESTING LABORATORY PRIOR TO PLACING THE REINFORCING STEEL AND CONCRETE.
2. ALL FOOTINGS SHALL BEAR ON AN UNDISTURBED SOIL STRATA OR COMPACTED FILL CAPABLE OF SUSTAINING THE LOADS.
3. FOOTINGS WERE DESIGNED FOR AN ALLOWABLE SOIL BEARING OF P = 2500 PSF.THE TESTING AGENCY SHALL VERIFY THAT THE SOILS ARE CAPABLE OF SUSTAINING 2500 PSF PRIOR TO CONCRETE PLACEMENT.
4. ELEVATIONS SHOWN ON PLAN ARE TOP OF FOOTINGS AND ARE MINIMUM DEPTH. DIFFERENT OR UNUSUAL CONDITIONS SHALL BE REPORTED TO THE ARCHITECT AND/OR ENGINEER.
5. ALL FOOTING REINFORCEMENT SHALL BE HELD SECURELY FROM THE GROUND. CONCRETE BLOCK AND BROKEN TILE SHALL NOT BE USED. CONCRETE OR CLAY BRICK MAY BE USED.
6. DOWEL ALL FOOTINGS AND WALLS WHERE THEY ABUT WITH SAME STEEL AS VERTICAL.
7. PROVIDE PREFORMED EXPANSION JOINT WHERE SHOWN.
8. IN FOOTINGS PROVIDE CORNER BARS AT ALL EXTERIOR BUILDING CORNERS.
9. DO NOT BACK FILL BEHIND FOUNDATION WALLS UNTIL TOP AND BOTTOM SLABS HAVE BEEN POURED AND ATTAINED THEIR DESIGN STRENGTHS.
10. BACK FILL BOTH SIDES OF FOUNDATION WALLS AT SAME TIME TO PREVENT OVERTURNING.
11. BACK FILL BEHIND ALL RETAINING WALLS AND BASEMENT WALLS SHALL BE AN APPROVED GRANULAR MATERIAL.

CONCRETE:
1. ALL CONCRETE SHALL HAVE A COMPRESSIVE STRENGTH AT 28 DAYS OF F'c = 3000 PSI AND A MAXIMUM WATER-CEMENT RATIO OF 0.53. ALL CONCRETE FOR EXTERIOR APPLICATIONS SHALL CONTAIN ENTRAINED AIR. SEE SPECS FOR ADDITIONAL INFORMATION.
2. REINFORCING STEEL SHALL CONFORM TO ASTM A615 GRADE 60.
3. WELDED WIRE FABRIC SHALL CONFORM TO ASTM A185 OR ASTM A1064.
4. UNLESS NOTED OTHERWISE PROTECTIVE COVERING OF REINFORCEMENT SHALL BE AS FOLLOWS (SEE DETAILS) : FOOTINGS AND GRADE BEAMS 3" CLEAR BOTTOM AND SIDES, 1 1/2" CLEAR TOP. CONCRETE SLABS 3/4" CLEAR. WALLS 1 1/2" CLEAR SIDES. BEAMS 1 1/2" CLEAR TO STIRRUPS. FORMED CONCRETE COLUMNS 1 1/2" CLEAR TO TIES.
5. LAP ALL CONCRETE WALL VERTICAL REINFORCING AND CONCRETE BEAM HORIZONTAL REINFORCING WITH CLASS B LAP SPLICES. LAP ALL OTHER CONTINUOUS BARS WITH CLASS A SPLICES UNLESS NOTED OTHERWISE.
6. PLACING PLANS AND DETAILS SHALL BE IN ACCORDANCE WITH THE LATEST "A.C.I. DETAILING MANUAL".
7. STEEL FABRICATOR SHALL SUBMIT SHOP DRAWINGS FOR THE ARCHITECT AND/OR ENGINEER'S REVIEW.
8. DO NOT RUN CONDUITS, RACEWAYS, OR PIPES IN CONCRETE SLABS, BEAMS, OR COLUMNS WITHOUT SPECIFIC APPROVAL FROM BLACKBURN DANIELS O'BARR.

MASONRY:
1. PROVIDE MASONRY HORIZONTAL JOINT REINFORCEMENT 16" O.C. VERTICAL IN ALL CONCRETE BLOCK WALLS. REINFORCEMENT SHALL BE FOR TOTAL WIDTH OF CAVITY WALLS.
2. WHERE CONCRETE OR STEEL BEAMS BEAR ON CONCRETE BLOCK WALLS, BLOCK CELLS SHALL BE FILLED WITH CONCRETE 1'-4" WIDE TO FOUNDATION AND REINFORCED WITH A #5 EACH CELL UNLESS NOTED OR DETAILED OTHERWISE.
3. CONCRETE OR GROUT FOR BLOCK FILL SHALL HAVE 3/8 INCH MAXIMUM SIZE COARSE AGGREGATE AND SUFFICIENT WATER SO THE CONCRETE WILL FLOW INTO THE BLOCK CELLS WITHOUT LEAVING VOIDS. HEIGHT OF LIFT WHEN FILLING CELLS SHALL NOT EXCEED 4'-0".
4. CONCRETE OR GROUT FILL FOR C.M.U. SHALL HAVE A 28 DAY COMPRESSIVE STRENGTH OF F'c = 3000 PSI. ON 16" AND DEEPER U-BLOCKS, FILL CELLS FULL HEIGHT OF LINTEL AT SAME TIME.
5. ANCHOR ALL MASONRY WALLS TO STEEL COLUMNS WITH STRAP ANCHORS AT 16" O.C. VERTICALLY UNLESS SHOWN OTHERWISE.
6. UNLESS INDICATED OTHERWISE PROVIDE KEYED RUBBER MASONRY CONTROL JOINTS AT A MAXIMUM SPACING OF 25'-4". JOINT SHALL BE DISCONTINUOUS AT BOND BEAM. COORDINATE EXACT LOCATIONS WITH ARCHITECT.
7. PROVIDE REINFORCING BAR SUPPORTS TO CENTER VERTICAL REINFORCING IN MASONRY WALLS.
8. PROVIDE 48 DIAMETER LAP SPLICE IN VERTICAL MASONRY REINFORCING.
9. PROVIDE CORNER BARS IN U-BLOCK BOND BEAMS AT CORNERS, TYPICAL.
10. ALL CMU SHALL BE PLACED IN A RUNNING BOND PATTERN UNLESS NOTED OTHERWISE ON ARCHITECTURAL DRAWINGS.
11. VERTICAL REINFORCING SHALL BE CONTINUOUS THROUGH BOND BEAMS AND LINTELS (CUT OUT OR NOTCH BOTTOM OF U-BLOCKS AS REQUIRED -- DO NOT SUBSTITUTE BLOCK WITH KNOCK-OUT WEBS WHERE STANDARD U-BLOCK IS INDICATED). FOR BOND BEAMS AT TOP OF WALL, EXTEND VERTICAL REINFORCING TO 1" CLEAR TOP OF BOND BEAM.

STRUCTURAL STEEL:
1. ALL STRUCTURAL STEEL W AND WT SHAPES SHALL CONFORM TO ASTM A992 (GRADE 50). OTHER SHAPES SHALL CONFORM TO ASTM, A36, LATEST EDITION (EXCEPT STEEL JOISTS AND TUBE SECTIONS).
2. STRUCTURAL STEEL TUBE SECTIONS SHALL CONFORM TO ASTM A500, GRADE B, Fy = 46.0 KSI.
3. HEADED STUDS SHALL BE TYPE B SHEAR CONNECTORS (Fu = 65 KSI).
4. STEEL FABRICATOR SHALL SUBMIT SHOP DRAWINGS FOR THE ARCHITECT AND/OR ENGINEER'S REVIEW.
5. THE CONTRACTOR SHALL VERIFY ALL SH0P DRAWINGS DIMENSIONS WITH STRUCTURAL AND ARCHITECTURAL PLANS AND DETAILS.
6. BOLTED CONNECTIONS SHALL BE MADE WITH HIGH STRENGTH BOLTS CONFORMING TO ASTM A325. USE 3/4 INCH DIAMETER MINIMUM. UNLESS NOTED OTHERWISE, ALL BOLTS SHALL BE TIGHTENED AS FULLY PRETENSIONED BEARING CONNECTIONS.
7. CONNECTIONS NOT SHOWN ON DRAWINGS SHALL BE DESIGNED BY THE FABRICATOR. WHERE POSSIBLE USE DOUBLE ANGLE CONNECTIONS. USE MAXIMUM NUMBER OF BOLTS FOR DEPTH OF BEAM WITH SINGLE ROW OF BOLTS. WHERE DOUBLE ANGLE CONNECTIONS ARE NOT POSSIBLE, FABRICATOR SHALL DESIGN CONNECTION FOR CAPACITY EQUIVALENT TO DBL-ANGLE CONNECTION WITH MAX NO. BOLTS UNLESS DETAILED OTHERWISE.
8. FOR DBL-ANGLE CONNECTIONS, MIN ANGLE THICKNESS SHALL BE 5/16" FOR 3/4 INCH DIAMETER BOLTS AND 3/8" FOR 7/8 INCH DIAMETER BOLTS AND LARGER.
9. UNLESS SHOWN OTHERWISE PROVIDE 1/2 X 7 1/2 X 7 1/2 BEARING PLATES ON 1 INCH GROUT WITH 2-3/4" DIAMETER ANCHOR BOLTS UNDER ALL STEEL BEAMS THAT BEAR ON MASONRY WALLS.
10. OPEN WEB STEEL JOIST SHALL CONFORM TO THE SPECIFICATIONS OF THE AISC AND SJI AND TO THE LATEST OSHA STEEL ERECTION STANDARD.
11. UNLESS SHOWN OTHERWISE PROVIDE BRIDGING, BEARING SEATS, AND STABILIZER PLATES IN ACCORDANCE WITH ABOVE SPECIFICATIONS AND STANDARD.
12. ALL BRIDGING SHALL BE SECURELY ANCHORED AT END OF EACH RUN. WELD TO STEEL BEAM OR ANCHOR TO MASONRY WALL WITH 3/8 " ANCHOR BOLTS.
13. WHERE JOISTS CAN NOT BEAR 2 1/2 INCHES ON STEEL BEAMS, STAGGER LOCATION OF JOISTS TO PROVIDE 2 1/2 INCHES MINIMUM BEARING.
14. ROOF JOISTS AND BRIDGING SHALL BE DESIGNED FOR A NET UPLIFT OF 15 PSF (ASD).
15. ANY MEMBER CALLED OUT TO BE BENT TO RADIUS SHALL BE FABRICATED OUT OF PLATE WITH EQUIVALENT SECTION PROPERTIES IF BENDING TO RADIUS IS IMPRACTICAL.

COLD-FORMED STEEL TRUSSES:
1. PROVIDE PREFABRICATED, PRE-ENGINEERED, COLD-FORMED STEEL TRUSSES WHERE INDICATED ON PLAN.
2. ALL TRUSSES SHALL BE DESIGNED AND MANUFACTURED TO MEET THE FOLLOWING WORKING LOADS AND CODES.
MINIMUM LOADS:
ROOF LIVE LOAD...............20 PSF.
ROOF DEAD LOAD...............15 PSF.
CEILING LOAD.................10 PSF.
3. MANUFACTURER SHALL SUBMIT SHOP DRAWINGS AND DESIGN CALCULATIONS FOR EACH TYPE TRUSS. DESIGNS SHALL BE SIGNED BY A REGISTERED PROFESSIONAL ENGINEER, REGISTERED IN THE STATE OF ALABAMA.
4. PROVIDE CAMBER IN ALL TRUSSES.
5. ALL TRUSSES SHALL BE SHOP-FABRICATED. FIELD-FABRICATED TRUSSES ARE NOT ACCEPTABLE. THE TOP AND BOTTOM CHORDS SHALL BE FABRICATED FROM SECTIONS THAT ARE SYMMETRICAL ABOUT THE Y-Y AXIS. "C" SECTIONS ARE NOT ACCEPTABLE.
6. ANCHOR ALL TRUSSES TO SUPPORTS WITH GALVANIZED ANCHORS PER MANUFACTURER'S RECOMMENDATIONS UNLESS SHOWN OTHERWISE ON THE STRUCTURAL CONTRACT DRAWINGS. TRUSS MANUFACTURER SHALL INDICATE ON SHOP DRAWINGS THE REQUIRED ANCHORAGE TO RESIST NET UPLIFT.
7. TRUSS TOP AND BOTTOM CHORDS SHALL BE A MINIMUM OF 16 GAGE. TRUSS WEB MEMBERS SHALL BE A MINIMUM OF 18 GAGE.
8. PROVIDE VERTICAL WEB MEMBERS TO ACCOMODATE TRUSS VERTICAL X-BRACING (SEE PLAN FOR LOCATIONS). X-BRACING SHOWN ON CONTRACT DRAWINGS IS IN ADDITION TO ALL BRACING REQUIRED BY TRUSS MFR (SHOWN ON TRUSS SHOP DWGS).
9. BLOCKING BETWEEN TRUSS TOP CHORDS @ HIPS, VALLEYS, & RIDGES MAY BE OMITTED ONLY IF CONT BENT-PLATE (ABOVE BLKG) HAS BEEN DESIGNED AND DETAILED BY COLD-FORMED SUPPLIER TO SERVE AS STRUCTURAL SUPPORT FOR DECK (SPANNING BETWEEN SUPPORTING TRUSSES ASSUMING 35 PSF MIN ROOF LOAD ON BENT-PL).

COLD-FORMED STEEL STUDS:
1. PROVIDE COLD FORMED STEEL STUDS WHERE INDICATED ON THE PLAN. ALL SIZES AND GAGES SHOWN SHALL BE CONSIDERED MINIMUM.
2. LIGHT STEEL GALVANIZED (G-60) METAL STUDS, OF SIZES SHOWN COMPLETE WITH ALL ACCESSORIES REQUIRED. 16 GA AND HEAVIER MEMBERS SHALL MEET ASTM A-1003/A1003M, GRADE D WITH 50 KSI YIELD.
3. PROVIDE SHOP DRAWINGS PREPARED BY COLD FORMED METAL FRAMING MANUFACTURER. SUBMIT FOR APPROVAL SHOWING PLANS, SECTIONS, ELEVATIONS, LAYOUTS, PROFILES, PRODUCT COMPONENTS, AND INDICATING SPACING OF MEMBERS, PROPOSED METHODS OF FRAMING LINTELS, DOORWAY FRAMING, ETC. SHOW CONNECTION DETAILS WITH SCREW TYPE AND LOCATIONS AND ALL OTHER FASTENER REQUIREMENTS. INCLUDE CATALOG DATA ON ALL PRODUCT MATERIAL.
4. MANUFACTURER SHALL SUBMIT SHOP DRAWINGS AND DESIGN CALCULATIONS INCLUDING ALL CONNNECTIONS. DESIGNS SHALL BE SIGNED BY A REGISTERED PROFESSIONAL ENGINEER, REGISTERED IN THE STATE OF ALABAMA.
5. MINIMUM CONNECTION OF THE TRACK TO THE FOUNDATION SHALL BE (2)-0.157IN DIAMETER X 1-1/2" EMBEDMENT HILTI X-U ANCHORS AT EACH STUD. FOLLOW ALL MANUFACTURERS RECOMMENDED EDGE DISTANCES AND SPACING REQUIREMENTS.

CODES:
ALL PARTS SHALL BE FURNISHED AND ERECTED ACCORDING TO THE APPLICABLE CODES AND SPECIFICATIONS OF THE FOLLOWING:
AMERICAN CONCRETE INSTITUTE (ACI)
AMERICAN INSTITUTE OF STEEL CONSTRUCTION (AISC)
AMERICAN WELDING SOCIETY (AWS)
OSHA STEEL ERECTION STANDARD (OSHA)
STEEL JOIST INSTITUTE (SJI)
INTERNATIONAL BUILDING CODE (IBC 2018) (ICC)

DESIGN LIVE LOADS:
ROOF.........20 PSF.
MEZZANINE....150 PSF
RISK CATEGORY (PER IBC 2018/ASCE 7-16)..........III
WIND.......INTERNATIONAL BUILDING CODE (PER ASCE 7-16)
ULTIMATE DESIGN WIND SPEED (Vult).........120 MPH
NOMINAL DESIGN WIND SPEED (Vasd)..........93 MPH
WIND EXPOSURE............................C
INTERNAL PRESSURE COEFFICIENTS...........+/-0.18
SEISMIC....INTERNATIONAL BUILDING CODE (PER ASCE 7-16)
SEISMIC IMPORTANCE FACTOR.................Ie=1.25
MAPPED SPECTRAL ACCELERATION (SHORT-TERM).Ss=0.3
MAPPED SPECTRAL ACCELERATION (1-SECOND)...S1=0.102
SITE CLASS...............................D
SHORT-PERIOD SPECTRAL RESPONSE ACCEL......Sds=0.312g
1-SECOND SPECTRAL RESPONSE ACCEL..........Sd1=0.163g
SEISMIC DESIGN CATEGORY...................C
SEISMIC FORCE-RESISTING SYSTEM............INTERMEDIATE
REINFORCED MASONRY SHEAR WALLS
DESIGN BASE SHEAR (ULTIMATE)..............135k
SEISMIC RESPONSE COEFFICIENT..............Cs=0.114
RESPONSE MODIFICATION FACTOR..............R=3.5
ANALYSIS PROCEDURE........................ASCE 7 (SECT 12.8)

SNOW.......INTERNATIONAL BUILDING CODE
GROUND SNOW LOAD.........................Pg=5 PSF

COMPONENTS AND CLADDING ULTIMATE WIND PRESSURES:
NOTE: MULTIPLY ALL VALUES SHOWN BELOW BY 0.6 TO GET ALLOWABLE DESIGN PRESSURES. SEE FIGURE 30.4-1 OF ASCE 7-16 FOR INDICATED ZONES. (IN TABLE BELOW, ZONE 2 INCLUDES ZONES 2e, 2n, & 2r. ZONE 3 INCLUDES ZONES 3e & 3r.)

ROOF:TRIBUTARY AREA A = 10 SF
ZONE 1: -49.7 PSF/31.3 PSF
ZONE 2: -86.5 PSF/31.3 PSF
ZONE 3: -128.0 PSF/31.3 PSF
ROOF:TRIBUTARY AREA A = 100 SF
ZONE 1: -45.1PSF/22.1PSF
ZONE 2: -63.5PSF/22.1PSF
ZONE 3: -100.4PSF/22.1PSF
WALL:TRIBUTARY AREA A = 10 SF
ZONE 4: -58.9PSF/54.3PSF
ZONE 5: -72.7PSF/54.3PSF
WALL:TRIBUTARY AREA A = 50 SF
ZONE 4: -53.3PSF/48.7PSF
ZONE 5: -61.4PSF/48.7PSF
WALL:TRIBUTARY AREA A = 100 SF
ZONE 4: -50.8PSF/46.2PSF
ZONE 5: -56.5PSF/46.2PSF
CORNER ZONE =5 FT

SPECIAL INSPECTIONS:
ALL SPECIAL INSPECTIONS REQUIRED BY CHAPTER 17 OF IBC SHALL BE PERFORMED BY A DESIGNATED TESTING AGENCY OR AGENCIES RESPONSIBLE FOR SPECIAL INSPECTIONS.

SEISMIC REQUIREMENTS FOR SPECIAL INSPECTIONS:
1. THE FOLLOWING STRUCTURAL COMPONENTS ARE DESIGNATED AS SEISMIC SYSTEMS AND/OR PART OF THE SEISMIC-FORCE-RESISTING SYSTEM OF THE BUILDING AND ARE SUBJECT TO THE REQUIREMENTS OF SECTIONS 1705.12 AND 1705.13 OF IBC 2018 AND PROJECT SPECIFICATIONS:
SHEAR WALLS (INCL. ANCHORAGE TO FOUNDATION)
THESE SPECIFIC COMPONENTS ARE IN ADDTION TO ALL GENERAL COMPONENTS LISTED IN SECTIONS 1705.12 AND 1705.13 OF IBC 2018 AND ARE SUBJECT TO ALL SPECIAL INSPECTIONS AND TESTING AS REQUIRED BY CHAPTER 17 OF IBC 2018, PROJECT SPECIFICATIONS, AND SCHEDULE OF SPECIAL INSPECTIONS. SPECIAL INSPECTION REPORTS SHALL BE SUBMITTED AS PER THE STATEMENT OF SPECIAL INSPECTIONS.
2. OTHER ARCHITECTURAL, MECHANICAL, OR ELECTRICAL COMPONENTS AND THEIR ANCHORAGES MAY ALSO BE DESIGNATED AS SEISMIC SYSTEMS. SEE OTHER DISCIPLINE'S DRAWINGS AND SPECIFICATIONS.

WIND REQUIREMENTS FOR SPECIAL INSPECTIONS:
1. THE FOLLOWING STRUCTURAL COMPONENTS ARE DESIGNATED AS WIND SYSTEMS AND/OR PART OF THE MAIN WINDFORCE-RESISTING SYSTEM OF THE BUILDING AND ARE SUBJECT TO THE REQUIREMENTS OF SECTION 1705.11 OF IBC 2018 AND PROJECT SPECIFICATIONS:
ROOF DIAPHRAGM SYSTEM AND ATTACHMENT
LOAD-BEARING CMU (SHEAR) WALLS
JOIST CONNECTIONS TO SHEAR WALLS
SHEAR WALL ANCHORAGE TO FOUNDATION
THESE SPECIFIC COMPONENTS ARE IN ADDTION TO ALL GENERAL COMPONENTS LISTED IN SECTION 1705.11 OF IBC 2018 AND ARE SUBJECT TO ALL SPECIAL INSPECTIONS AND TESTING AS REQUIRED BY CHAPTER 17 OF IBC 2018, PROJECT SPECIFICATIONS, AND SCHEDULE OF SPECIAL INSPECTIONS. SPECIAL INSPECTION REPORTS SHALL BE SUBMITTED AS PER THE STATEMENT OF SPECIAL INSPECTIONS.
2. OTHER ARCHITECTURAL COMPONENTS AND THEIR ANCHORAGES MAY ALSO BE DESIGNATED AS WIND-RESISTING COMPONENTS. SEE OTHER DISCIPLINE'S DRAWINGS AND SPECIFICATIONS.

SS&L
ARCHITECTURE & INTERIOR DESIGN
1115 South Court Street | Montgomery, AL 36104
Tel. 334.263.5162 | WWW.SSLARCH.COM

Rev.	Description	Date

Job Number: 12072
Date: JUNE 2024
Drawn By
Checked By
Project Title: New Security Building, 117th Air Refueling Wing, Birmingham, Alabama
Sheet Title: General Notes / Schedules / Typical Details
Sheet Number: S0.1

ALABAMA REGISTERED PROFESSIONAL ENGINEER No. 30036 JACK W. DANIELS
06-17-24

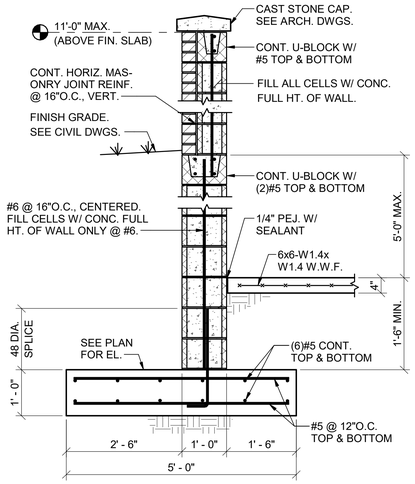

1 S1.1 SECTION
3/4" = 1'-0"

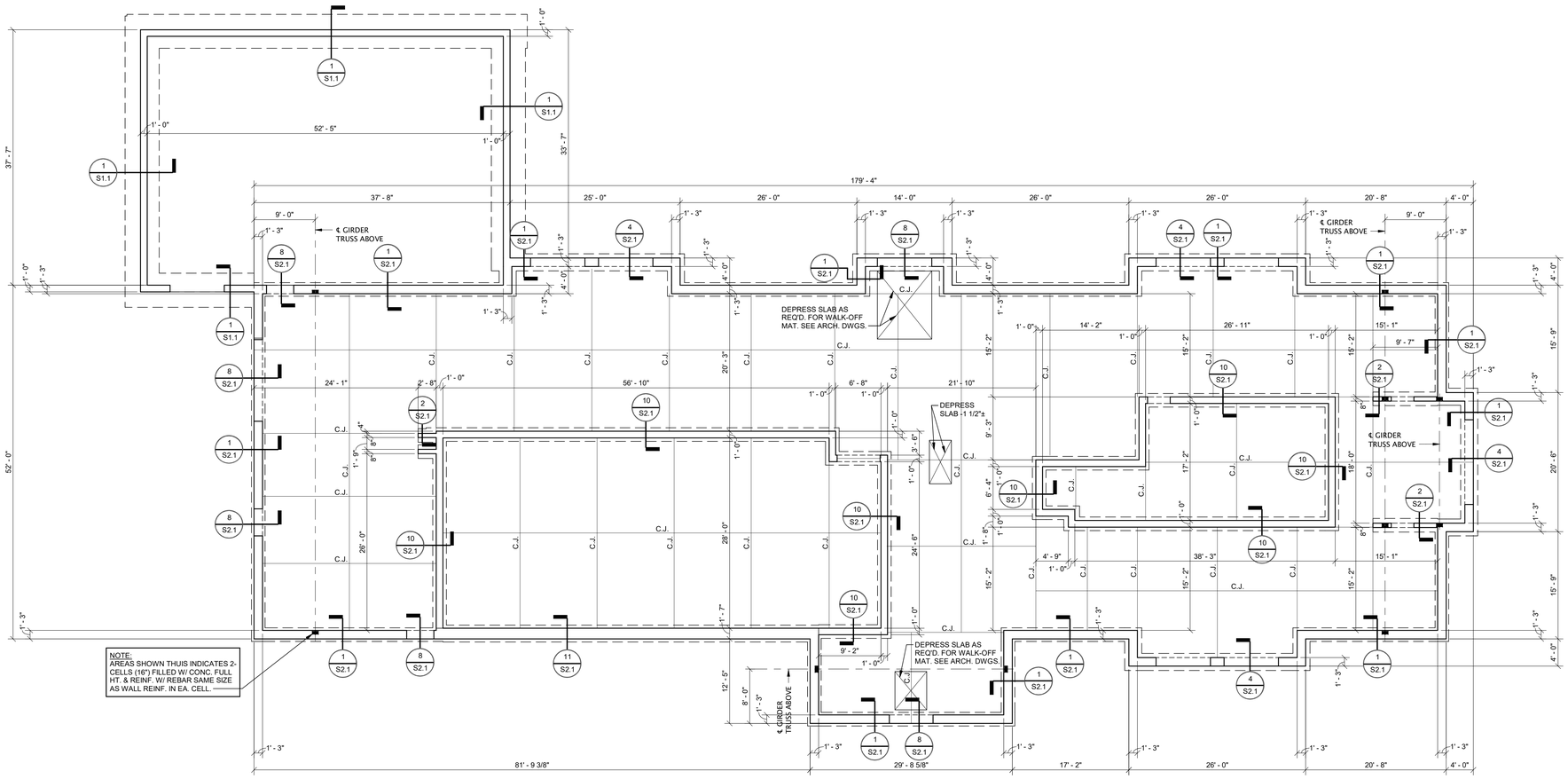

FIRST FLOOR AND FOUNDATION PLAN - BASE BID

1/8" = 1'-0"

NOTE:
UNLESS NOTED OTHERWISE,
TOP OF FOOTING EL. = -2'-8"

FLOOR CONSTRUCTION

4" THICK CONCRETE SLAB W/ 6x6-W1.4x W1.4 W.W.F. OVER VAPOR BARRIER OVER 4" POUROUS FILL.
FINISH FLOOR EL.=+0'-0"

NOTE:
PROVIDE A TYPICAL THICKENED SLAB UNDER ALL C.M.U. PARTITIONS NOT BEARING ON A FOOTING. SEE SHEET S0.1 FOR TYPICAL THICKENED SLAB DETAIL.

S|S&L
ARCHITECTURE & INTERIOR DESIGN
1115 South Governors Drive, Huntsville, AL 35804
Tel. 334. 303. 5102 | WWW.SSLARCH.COM

Rev.	Description	Date

Job Number
12072

Date
JUNE 2024

Drawn By

Checked By

Project Title

New Security Building
117th Air Refueling Wing
Birmingham, Alabama

Sheet Title
First Floor and Foundation Plan - (Base Bid)

Sheet Number
S1.1

ALABAMA REGISTERED PROFESSIONAL ENGINEER No. 30036 JACK W. DANIELS
06-17-24

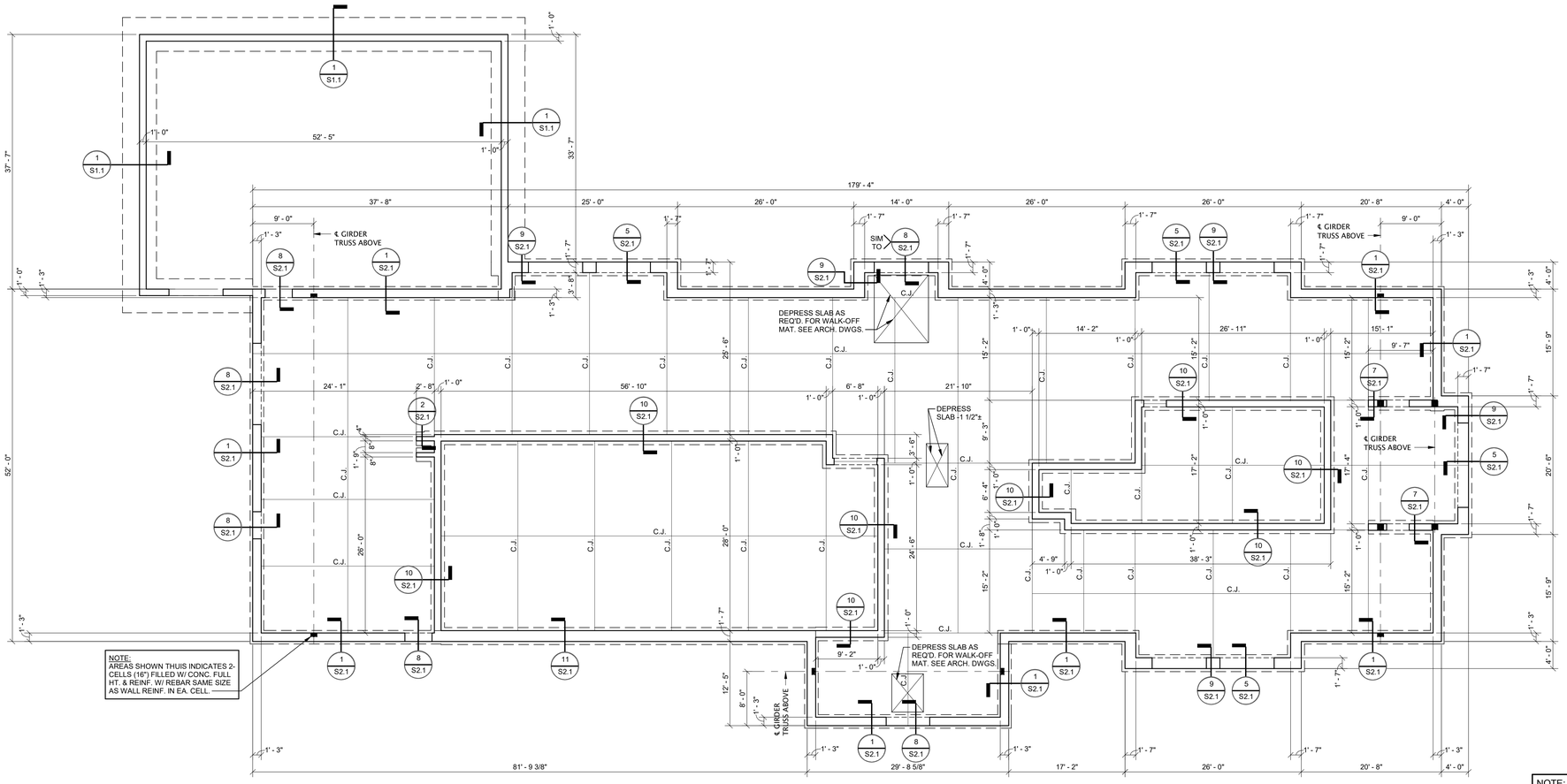

NOTE:
UNLESS NOTED OTHERWISE, TOP OF FOOTING EL. = -2'-8"

FIRST FLOOR AND FOUNDATION PLAN - BID OPTION

1/8" = 1'-0"

FLOOR CONSTRUCTION

4" THICK CONCRETE SLAB W/ 6x6-W1.4x W1.4 W.W.F. OVER VAPOR BARRIER OVER 4" POUROUS FILL.
FINISH FLOOR EL =+0'-0"

NOTE:
PROVIDE A TYPICAL THICKENED SLAB UNDER ALL C.M.U. PARTITIONS NOT BEARING ON A FOOTING. SEE SHEET S0.1 FOR TYPICAL THICKENED SLAB DETAIL.

GENERAL NOTE:

REFER TO SPECIFICATION SECTION 0 / 2300 FOR DESCRIPTION OF BID OPTION.

S|S&L
ARCHITECTURE & INTERIOR DESIGN
1115 South Governor's Drive, Huntsville, AL 35805-1104
Tel. 334. 303. 5102 | WWW.SSLARCH.COM

Rev.	Description	Date

Job Number
12072

Date
JUNE 2024

Drawn By

Checked By

Project Title

New Security Building

117th Air Refueling Wing
Birmingham, Alabama

Sheet Title
First Floor and Foundation Plan - (Bid Option)

Sheet Number
S1.1A

ALABAMA REGISTERED No. 30036 PROFESSIONAL ENGINEER JACK W. DANIELS
06-17-24

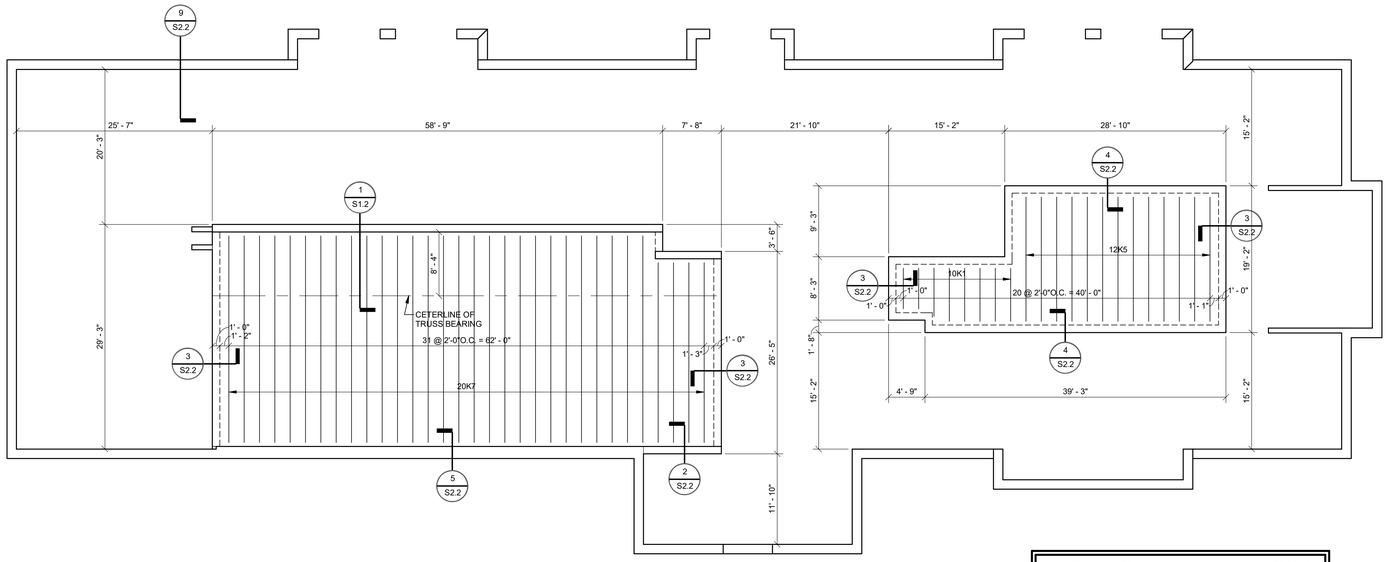

Mezzanine & Structural Ceiling Framing Plan

1/8" = 1'-0"

MECHANICAL MEZZANINE FLOOR & CEILING CONSTRUCTION

3" THICK NORMAL WEIGHT CONCRETE SLAB W/ 6x6-W2.1xW2.1 W.W.F. 3/4" CLEAR TOP, OVER STANDARD GALVANIZED, 28 GAGE STEEL FORM DECK W/ THE FOLLOWING SECTION PROPERTIES:

$S_+ = 0.036$ IN.^{3} $S_- = 0.037$ IN.^{3} $I = 0.011$ IN.^{4}

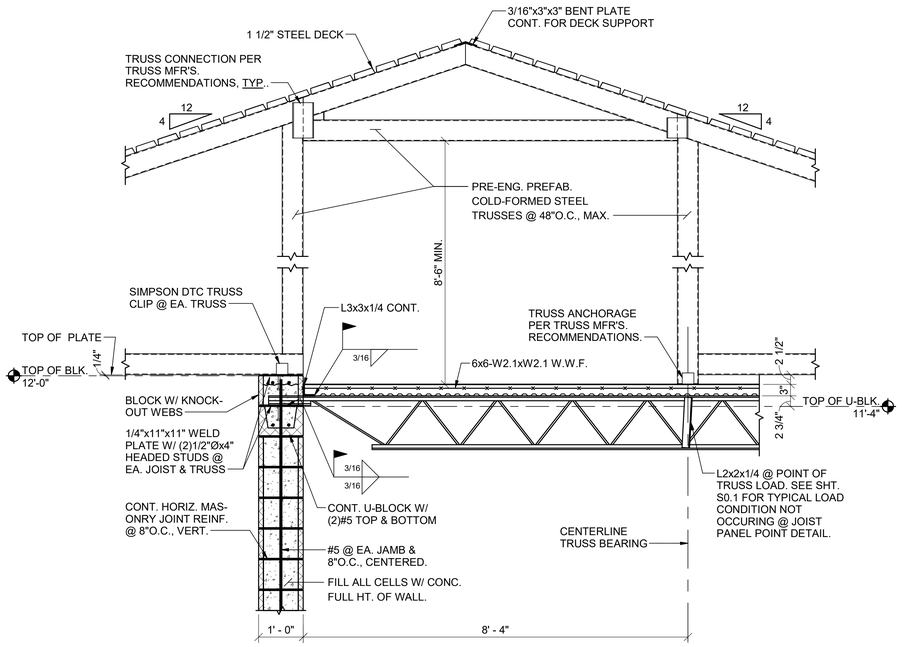

1 S1.2 SECTION
3/4" = 1'-0"

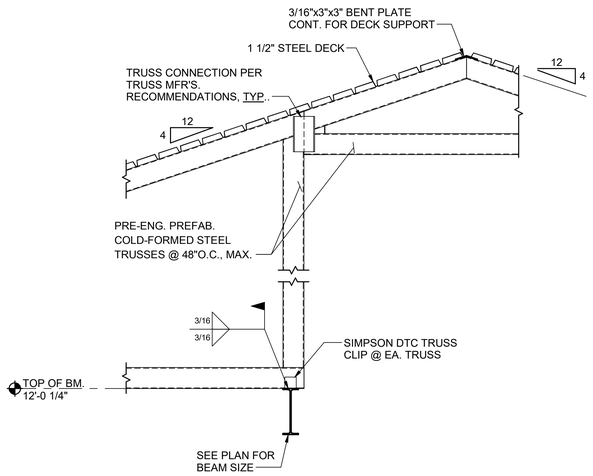

2 S1.2 SECTION
3/4" = 1'-0"

S|S&L
ARCHITECTURE & INTERIOR DESIGN
1115 South Governor Highway, Hoover, AL 35244
Tel 334.303.5102 | WWW.SSLARCH.COM

Rev.	Description	Date

Job Number
12072

Date
JUNE 2024

Drawn By

Checked By

Project Title

New Security Building
117th Air Refueling Wing
Birmingham, Alabama

Sheet Title
Mezzanine Framing Plan

Sheet Number
S1.2

ALABAMA REGISTERED No. 30036 PROFESSIONAL ENGINEER JACK W. DANIELS
06-17-24

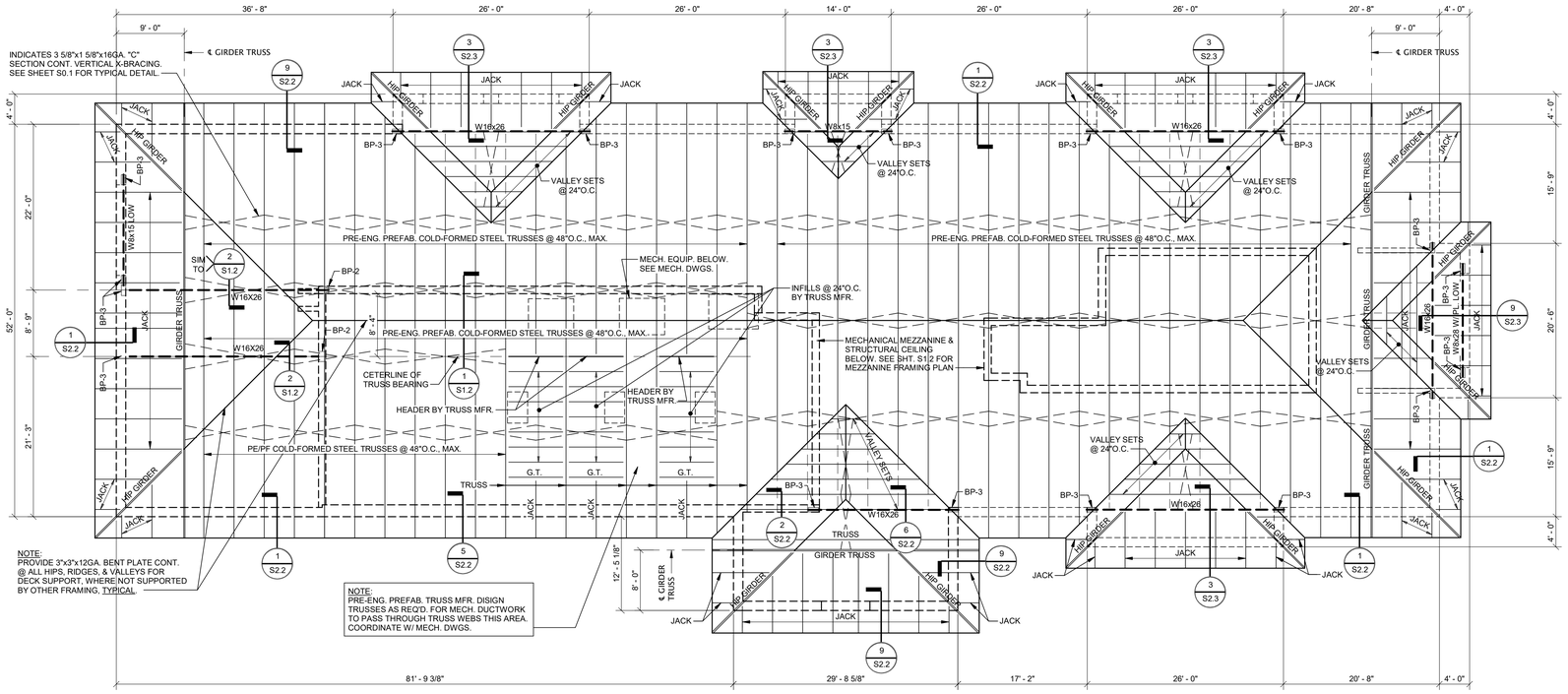

NOTE:
PROVIDE 3"x3"x12GA. BENT PLATE CONT. @ ALL HIPS, RIDGES, & VALLEYS FOR DECK SUPPORT, WHERE NOT SUPPORTED BY OTHER FRAMING. TYPICAL.

NOTE:
PRE-ENG. PREFAB. TRUSS MFR. DISIGN TRUSSES AS REQ'D. FOR MECH. DUCTWORK TO PASS THROUGH TRUSS WEBS THIS AREA. COORDINATE W/ MECH. DWGS.

ROOF FRAMING PLAN - BASE BID

1/8" = 1'-0"

ROOF CONSTRUCTION

1 1/2" DEEP, 22 GAGE, WIDE RIB STEEL DECK W/ THE MINIMUM SECTION PROPERTIES PER FOOT OF WIDTH:

$S=0.19$ IN.^{3} $I=0.16$ IN.^{4}

OVER PRE-ENGINEERED PREFABRICATED COLD-FORMED STEEL TRUSSES @ 48"O.C., MAX.

S|S&L
ARCHITECTURE & INTERIOR DESIGN
1113 South Cobern Valley Drive, Vestavia Hills, AL 35244
Tel. 334. 303. 5102 | WWW.SSLARCH.COM

Rev.	Description	Date

Job Number: 12072

Date: JUNE 2024

Drawn By

Checked By

Project Title

New Security Building

117th Air Refueling Wing
Birmingham, Alabama

Sheet Title: Roof Framing Plan - (Base Bid)

Sheet Number: S1.3

ALABAMA REGISTERED No. 30036 PROFESSIONAL ENGINEER JACK W. DANIELS

06-17-24

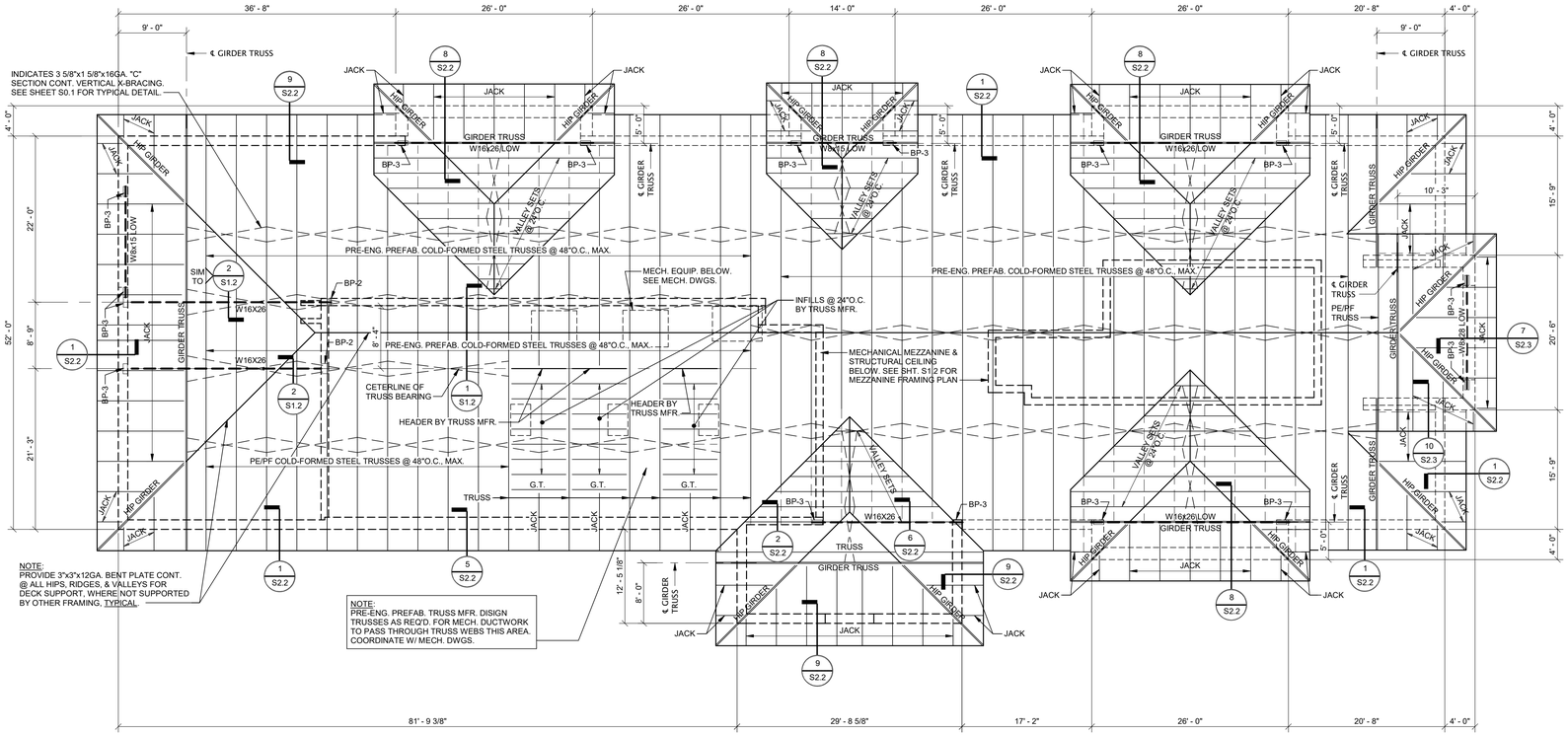

NOTE:
PROVIDE 3"x3"x12GA. BENT PLATE CONT. @ ALL HIPS, RIDGES, & VALLEYS FOR DECK SUPPORT, WHERE NOT SUPPORTED BY OTHER FRAMING, TYPICAL.

NOTE:
PRE-ENG. PREFAB. TRUSS MFR. DISIGN TRUSSES AS REQ'D. FOR MECH. DUCTWORK TO PASS THROUGH TRUSS WEBS THIS AREA. COORDINATE W/ MECH. DWGS.

ROOF FRAMING PLAN - BID OPTION

1/8" = 1'-0"

ROOF CONSTRUCTION

1 1/2" DEEP, 22 GAGE, WIDE RIB STEEL DECK W/ THE MINIMUM SECTION PROPERTIES PER FOOT OF WIDTH:

$S = 0.19\ IN.^3$ $I = 0.16\ IN.^4$

OVER PRE-ENGINEERED PREFABRICATED COLD-FORMED STEEL TRUSSES @ 48"O.C., MAX.

GENERAL NOTE:

REFER TO SPECIFICATION SECTION 0 / 2300 FOR DESCRIPTION OF BID OPTION.

S|S&L
ARCHITECTURE & INTERIOR DESIGN
1115 South Colonnade, Birmingham, AL 35204
Tel. 334. 323. 5102 | WWW.SSLARCH.COM

Rev.	Description	Date

Job Number: 12072

Date: JUNE 2024

Drawn By

Checked By

Project Title

New Security Building

117th Air Refueling Wing
Birmingham, Alabama

Sheet Title: Roof Framing Plan - (Bid Option)

Sheet Number: S1.3A

ALABAMA REGISTERED No. 30036 PROFESSIONAL ENGINEER JACK W. DANIELS

06-17-24

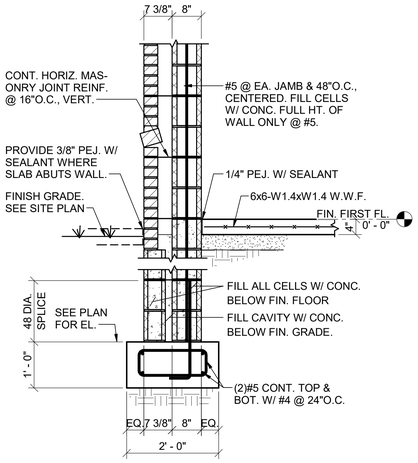

1 S2.1 SECTION
3/4" = 1'-0"

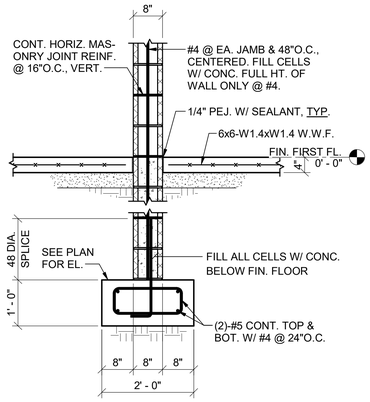

2 S2.1 SECTION
3/4" = 1'-0"

OMITTED

3 S2.1 SECTION
3/4" = 1'-0"

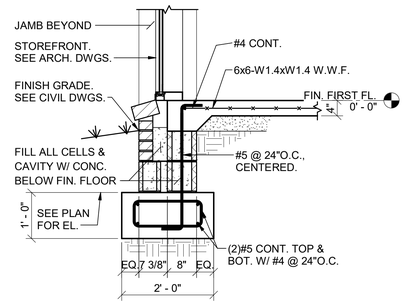

4 S2.1 SECTION
3/4" = 1'-0"

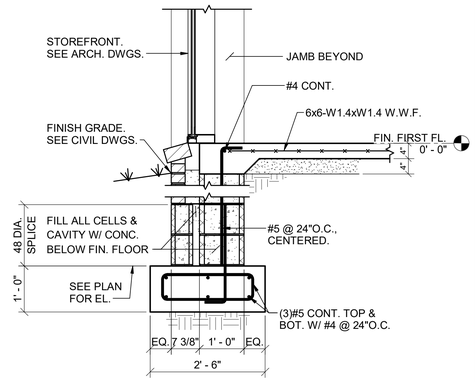

5 S2.1 SECTION
3/4" = 1'-0"

OMITTED

6 S2.1 SECTION
3/4" = 1'-0"

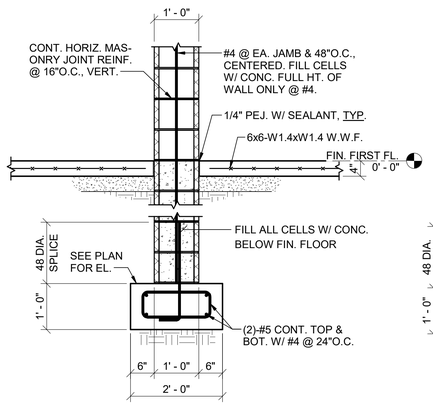

7 S2.1 SECTION
3/4" = 1'-0"

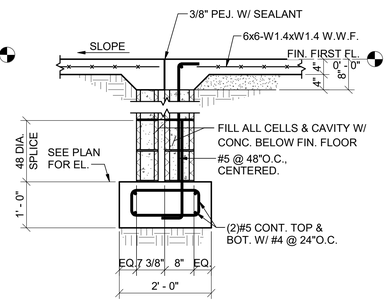

8 S2.1 SECTION
3/4" = 1'-0"

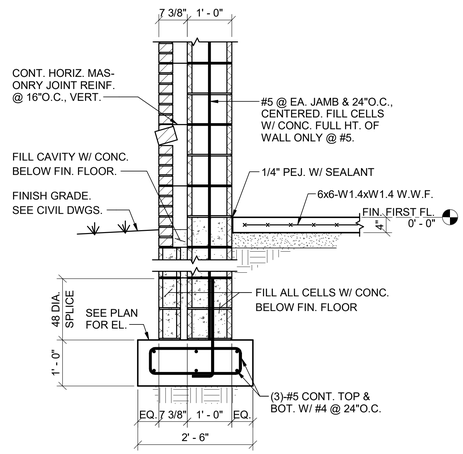

9 S2.1 SECTION
3/4" = 1'-0"

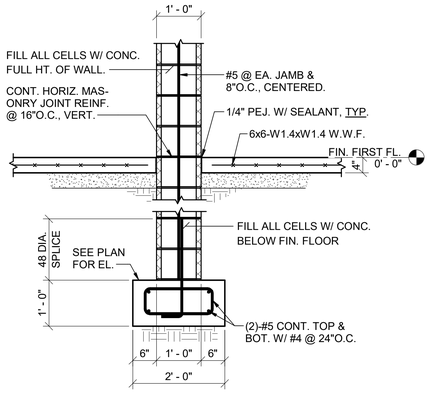

10 S2.1 SECTION
3/4" = 1'-0"

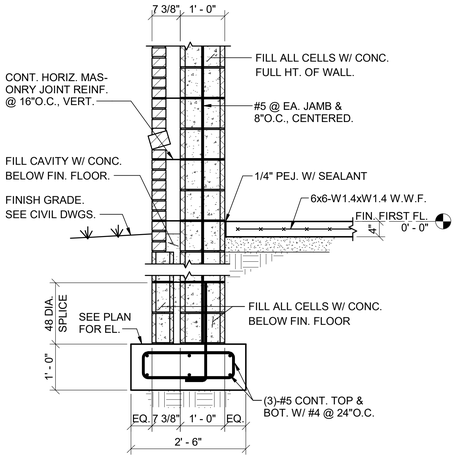

11 S2.1 SECTION
3/4" = 1'-0"

SS&L
ARCHITECTURE & INTERIOR DESIGN
1115 South Gordon Drive, Florence, AL 35630
Tel. 334. 763. 5162 | WWW.SSLARCH.COM

Rev.	Description	Date

Job Number
12072

Date
JUNE 2024

Drawn By

Checked By

Project Title

New Security Building
117th Air Refueling Wing
Birmingham, Alabama

Sheet Title
Sections and Details

Sheet Number
S2.1

ALABAMA REGISTERED No. 30036 PROFESSIONAL ENGINEER J. K. W. DANIEL

06-17-24

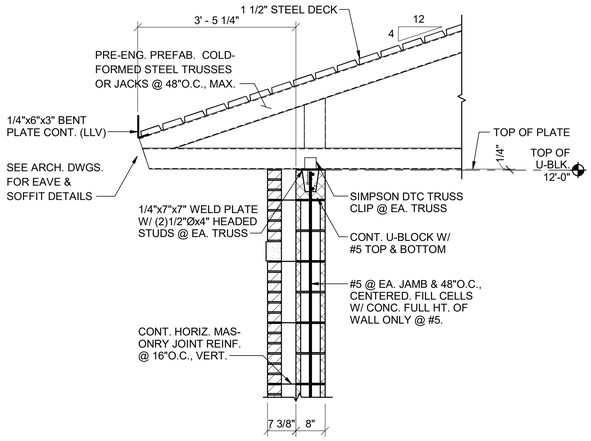

1 S2.2 SECTION
3/4" = 1'-0"

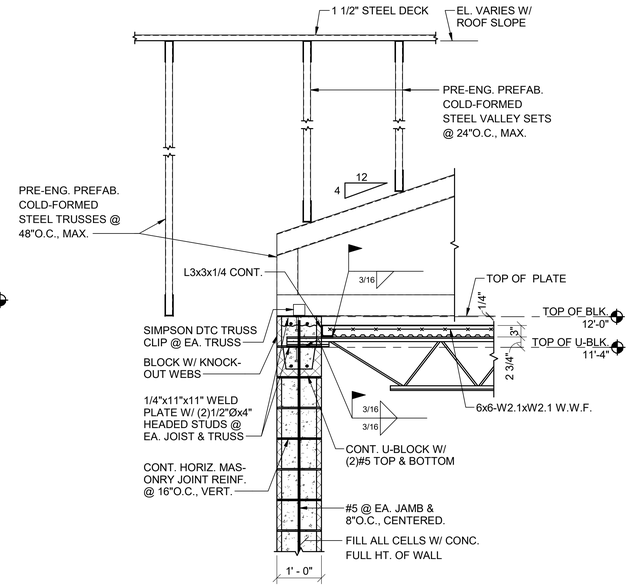

2 S2.2 SECTION
3/4" = 1'-0"

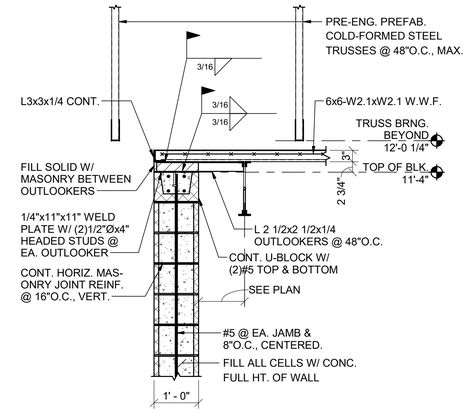

3 S2.2 SECTION
3/4" = 1'-0"

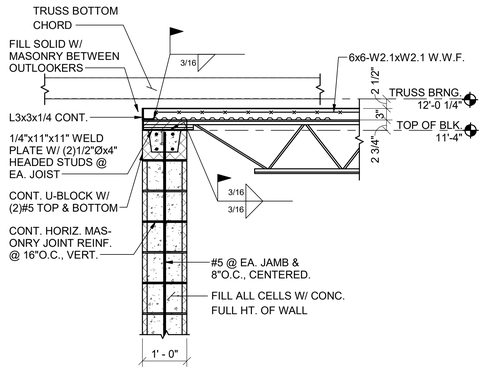

4 S2.2 SECTION
3/4" = 1'-0"

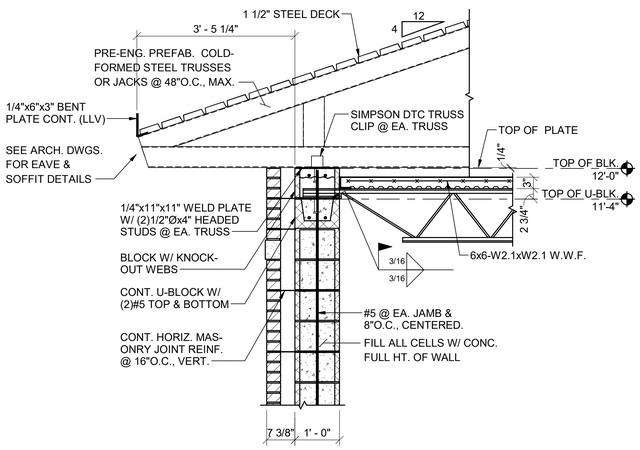

5 S2.2 SECTION
3/4" = 1'-0"

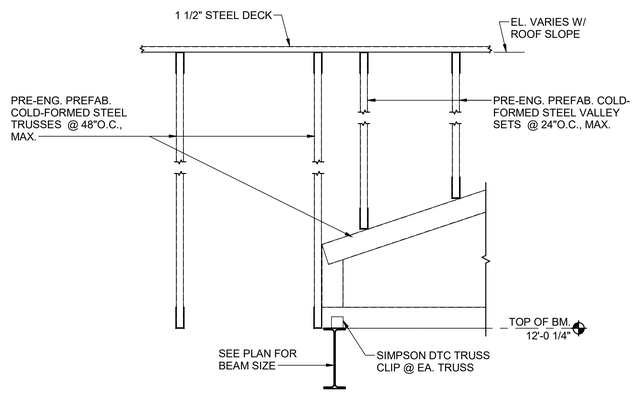

6 S2.2 SECTION
3/4" = 1'-0"

OMITTED

7 S2.2 SECTION
3/4" = 1'-0"

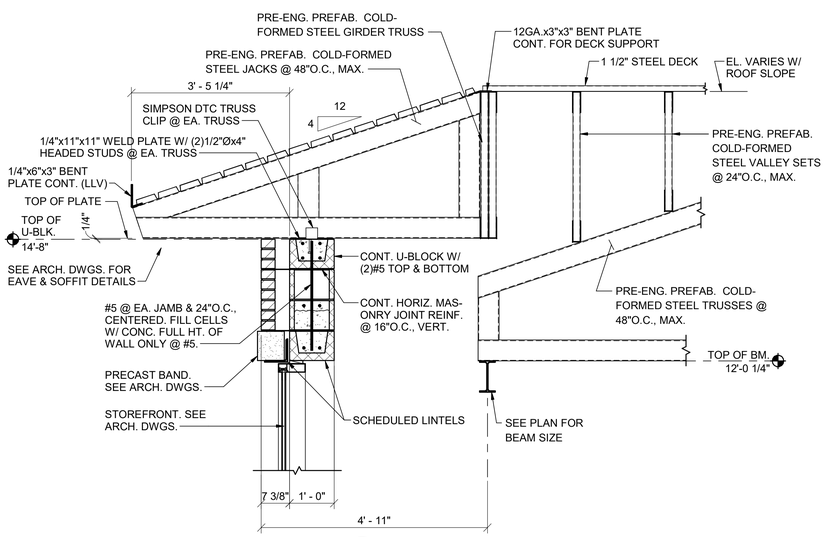

8 S2.2 SECTION
3/4" = 1'-0"

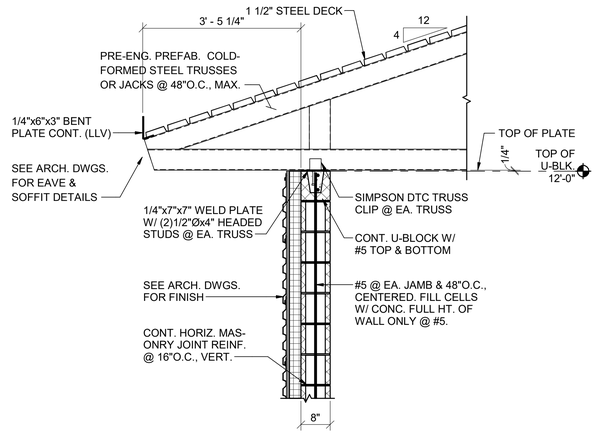

9 S2.2 SECTION
3/4" = 1'-0"

OMITTED

A S2.2 DETAIL
3/4" = 1'-0"

S|S&L
ARCHITECTURE & INTERIOR DESIGN
1115 South Governor Highway, Huntsville, AL 35801
Tel. 334.263.5102 | WWW.SSLARCH.COM

Rev.	Description	Date

Job Number: 12072
Date: JUNE 2024
Drawn By
Checked By
Project Title

New Security Building
117th Air Refueling Wing
Birmingham, Alabama

Sheet Title: Sections and Details

Sheet Number: S2.2

ALABAMA REGISTERED No. 30036 PROFESSIONAL ENGINEER JACK W. DANIELS
06-17-24

OMITTED

1 S2.3 SECTION
3/4" = 1'-0"

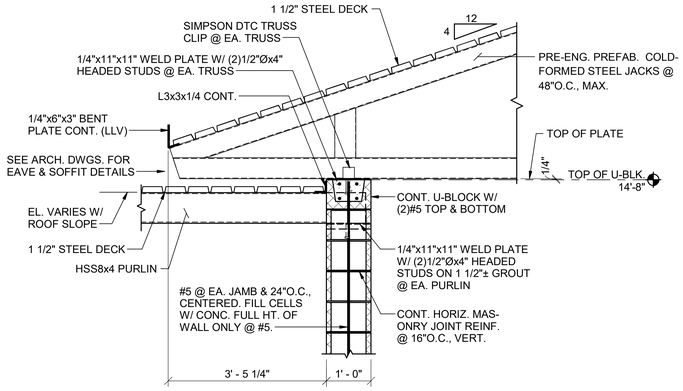

2 S2.3 SECTION
3/4" = 1'-0"

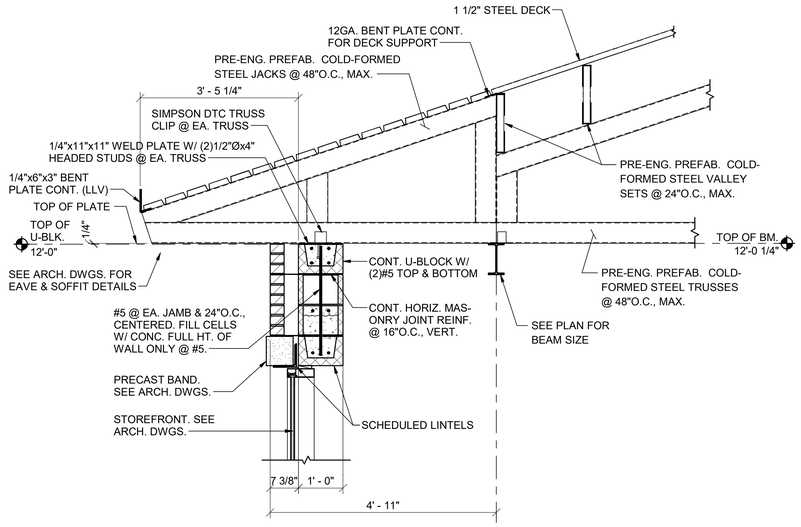

3 S2.3 SECTION
3/4" = 1'-0"

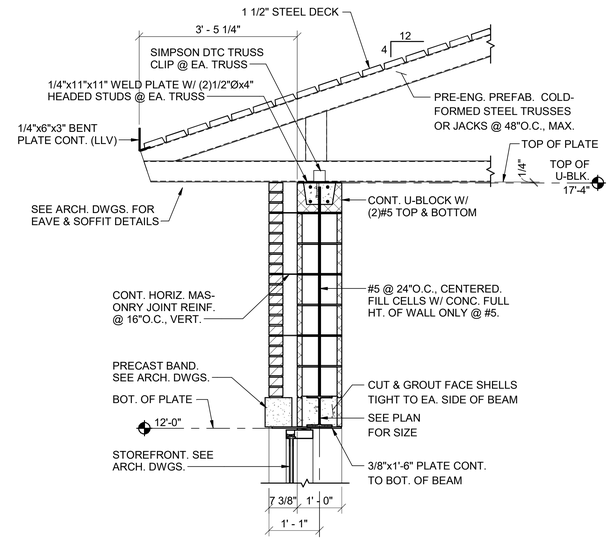

7 S2.3 SECTION
3/4" = 1'-0"

OMITTED

4 S2.3 SECTION
3/4" = 1'-0"

OMITTED

5 S2.3 SECTION
3/4" = 1'-0"

OMITTED

6 S2.3 SECTION
3/4" = 1'-0"

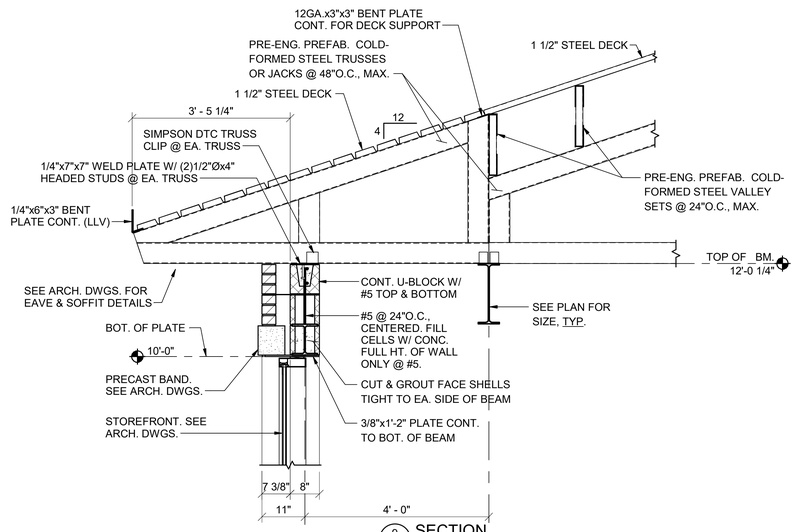

9 S2.3 SECTION
3/4" = 1'-0"

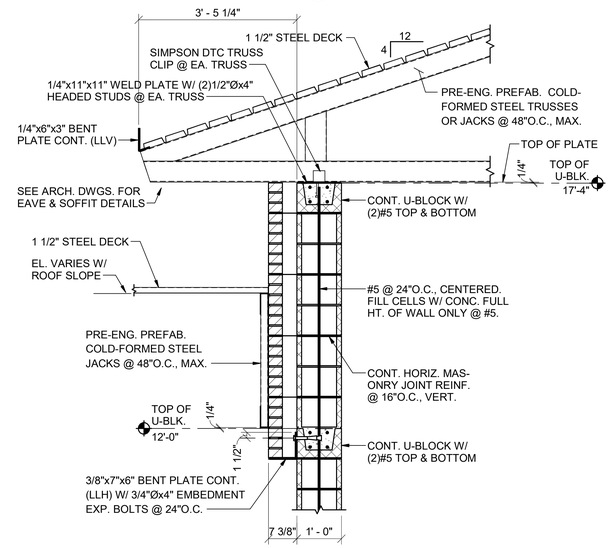

10 S2.3 SECTION
3/4" = 1'-0"

OMITTED

8 S2.3 SECTION
3/4" = 1'-0"

S|S&L
ARCHITECTURE & INTERIOR DESIGN
1115 South Colonnade Parkway, Birmingham, AL 35243
Tel: 334.263.5102 | WWW.SSLARCH.COM

Rev.	Description	Date

Job Number: 12072
Date: JUNE 2024
Drawn By:
Checked By:
Project Title:

New Security Building
117th Air Refueling Wing
Birmingham, Alabama

Sheet Title: Sections and Details

Sheet Number: S2.3

ALABAMA REGISTERED No. 30036 PROFESSIONAL ENGINEER JACK W. DANIELS
06-17-24

DUCTLESS AIR CONDITIONING EQUIPMENT SCHEDULE (WALL MOUNT)

MARK NO.	NOMINAL FAN CFM	COOLING CAPACITY					MANUFACTURER (OR APPROVED EQUAL)	INDOOR UNIT DATA					OUTDOOR UNIT DATA						APPROXIMATE REFRIG. PIPING SIZE		NOTES
		SENS. CAP. MBH	TOTAL CAP. MBH	COND. E.A.T.	EVAP. E.W.B. TEMP	MIN. SEER		VOLTAGE	MODEL NO.	FAN MOTOR FLA	MCA	UNIT WEIGHT (LBS.)	VOLTAGE	MODEL NO.	COMPRESSOR RLA	MCA	MOCP	UNIT WEIGHT (LBS.)	GAS (IN. O.D.)	LIQUID (IN. O.D.)	
DAC 1	450	13.1	18.0	95	80/67	19.8	MITSUBISHI	208/230–1–60	PKA–A18LA	0.19	1	28	208/230–1–60	PUY–A18NKA7	7	11	28	99	1/2	1/4	SEE BELOW

1. UNIT TO INCLUDE A WALL MOUNTED 7–DAY PROGRAMMABLE AUTOMATIC CHANGEOVER THERMOSTAT WITH SUB–BASE AND LOCKING COVER. THERMOSTAT SHALL BE FACTORY MA REMOTE CONTROLLER MODEL PAR–40MAAU.
2. INDOOR UNIT TO BE WALL MOUNTED WITH FACTORY CONDENSATE PUMP AND SHALL INCLUDE LINE SET/CONDENSATE PUMP ENCLOSURE KIT (CONDENSATE PUMP APPROVED EQUALS: LITTLE GIANT EC–1K AND ASPEN/AIRTEC MINI AND MAXI LIME).
3. INDOOR UNIT TO RECEIVE POWER FROM OUTDOOR UNITS THROUGH FIELD–SUPPLIED INTERCONNECTED WIRING.
4. UNIT TO INCLUDE LOW AMBIENT CONTROLS TO 0°F.
5. REFRIGERANT R–410A (VERIFY FINAL REFRIGERANT PIPING SIZE AND LENGTH WITH MANUFACTURER).
6. ALL INDOOR UNITS TO BE MOUNTED AS HIGH AS POSSIBLE.
7. UNIT SHALL BE COMPLETELY INTERFACED TO THE BUILDING AUTOMATION SYSTEM.
8. ADDITIONAL REFRIGERANT CHARGE IS NEEDED DEPENDING ON THE SIZE AND LENGTH OF EXTENDED PIPING. COORDINATE WITH EQUIPMENT MANUFACTURER.
9. CONTRACTOR'S VENDOR SHALL PROVIDE REFRIGERANT LINE FINAL SIZES, LENGTHS, ETC. PER MANUFACTURER'S RECOMMENDATION. SUBMITTAL DRAWINGS SHALL INCLUDE CONTROLS, LINE SIZES, ETC. CONTRACTOR SHALL COORDINATE SIZES SHOWN ON PLANS WITH ACTUAL EQUIPMENT QUOTED PRIOR TO BIDDING.
10. FURNISH AND INSTALL PRE–INSULATED REFRIGERANT LINE SETS.
11. REFRIGERANT PIPING SHALL BE LABELED TO MATCH ASSOCIATED INDOOR AND OUTDOOR UNIT.
12. ALL EXPOSED INTERIOR REFRIGERANT PIPING SHALL BE ROUTED IN SCHEDULE 40 PVC. PRIME AND PAINT TO MATCH ADJACENT SURFACES. VERIFY PAINT COLOR WITH OWNER/ARCHITECT.
13. USE INSULATED REFRIGERANT PIPING CLAMPS WHERE REFRIGERANT PIPING IS INSULATED.
14. UNIT SHALL BE ASHRAE 90.1–2013 COMPLIANT.

APPROVED EQUALS: FRIEDRICH AND FUJITSU

HVAC LEGEND

SYMBOL	DESCRIPTION	SYMBOL	DESCRIPTION	SYMBOL	DESCRIPTION
	CEILING DIFFUSER – SUPPLY RECTANGULAR WITH ROUND NECK 4–WAY THROW UNLESS OTHERWISE INDICATED		MANUAL VOLUME DAMPER OPPOSED BLADE		STANDARD 90° RADIUS ELBOW
	CEILING DIFFUSER – RETURN RECTANGULAR WITH SQUARE NECK	M	LOW LEAKAGE MOTORIZED VOLUME DAMPER		STANDARD 45° RADIUS ELBOW
	SIDEWALL DIFFUSER – SUPPLY WITH MULTI–VANE DEFLECTOR	SD	SMOKE DETECTOR FOR FAN SHUT–DOWN		90° VANED ELBOW (PROVIDE ALL SQUARE OR RECTANGULAR ELBOWS WITH VANES EVEN IF SYMBOL IS MISSING)
	SIDEWALL DIFFUSER – RETURN WITH 30° FIXED DEFLECTION		HORIZONTAL MOUNTED FIRE DAMPER		45° VANED ELBOW (PROVIDE ALL SQUARE OR RECTANGULAR ELBOWS WITH VANES EVEN IF SYMBOL IS MISSING)
XX–X XXX CFM	DIFFUSER TAG REFERENCE SCHEDULE FOR SIZING		VERTICAL MOUNTED FIRE DAMPER		VANED TEE (PROVIDE ALL SQUARE OR RECTANGULAR TEE'S WITH VANES EVEN IF SYMBOL IS MISSING)
12"X12"	NEW RECTANGULAR DUCT WIDTH X DEPTH	T	THERMOSTAT/HUMIDITY SENSOR LOCATION		STANDARD DUCT SIZE TRANSITION
10"ø	NEW ROUND DUCT DIAMETER	H	HUMIDISTAT LOCATION		STANDARD SQUARE TO ROUND TRANSITION
	ACCESS DOORS VERTICAL OR HORIZONTAL	M	CARBON MONOXIDE SENSOR LOCATION	— CD —	HVAC CONDENSATE DRAIN PIPING
R —	DUCT RISE IN DIRECTION OF ARROW	C	CARBON DIOXIDE SENSOR LOCATION	— R —	HVAC REFRIGERANT LINE
— D	DUCT DROP IN DIRECTION OF ARROW		ELECTRIC UNIT HEATER WALL MOUNTED (RECESSED)		

HVAC NOTES

1. ALL DUCT DIMENSIONS SHOWN ARE NET INTERNAL.
2. INSTALL OPPOSED BLADE BALANCING DAMPERS IN ALL NEW DIFFUSERS AND GRILLES.
3. THESE DRAWINGS ARE SCHEMATIC IN NATURE AND ARE NOT INTENDED TO SHOW ALL POSSIBLE CONDITIONS. IT IS INTENDED THAT A COMPLETE HVAC SYSTEM BE PROVIDED WITH ALL NECESSARY EQUIPMENT, APPURTENANCES, AND CONTROLS, COMPLETELY COORDINATED WITH ALL DISCIPLINES. ALL REQUIREMENTS OF THESE DOCUMENTS SHALL BE STRICTLY CONFORMED WITH. ANY ITEMS AND LABOR REQUIRED FOR A COMPLETE HVAC SYSTEM IN ACCORDANCE WITH ALL APPLICABLE CODES, STANDARDS, AND THESE CONTRACT DOCUMENTS SHALL BE FURNISHED WITHOUT INCURRING ANY ADDITIONAL COST TO THE CONTRACT. CAREFULLY REVIEW ALL CONTRACT DOCUMENTS AND THE DESIGN OF OTHER TRADES BEFORE PREPARING SHOP DRAWINGS.
4. COORDINATE DUCTWORK AND PIPING WITH STRUCTURAL, PLUMBING, FIRE PROTECTION AND ELECTRICAL. MAKE OFFSETS AND TRANSITIONS AS REQUIRED TO CLEAR STRUCTURAL MEMBERS, ETC. COORDINATE WITH OTHER TRADES WITHOUT ADDITIONAL EXPENSE TO THE OWNER.
5. REFER TO ARCHITECTURAL CEILING PLANS FOR EXACT LOCATION OF ALL CEILING MOUNTED AIR DISTRIBUTION DEVICES; COORDINATE EXACT LOCATION OF GRILLES, REGISTERS, AND DIFFUSERS WITH ARCHITECTURAL AND INTERIOR REFLECTED CEILING PLANS AND LIGHTING FIXTURES. FOR PARTICULAR ITEMS NOT SHOWN ON THE ARCHITECTURAL REFLECTED CEILING PLAN, PREPARE A DRAWING AND PRESENT IT TO THE ARCHITECT FOR REVIEW AND/OR APPROVAL.
6. COORDINATE ALL ROOF AND SLAB PENETRATIONS WITH THE STRUCTURAL ENGINEER. TRANSITIONS RECTANGULAR DUCTWORK ON THE BOTTOM AND THE SIDES. MAINTAIN DUCTWORK LEVEL AS HIGH AS POSSIBLE UNLESS NOTED OTHERWISE.
7. THE HVAC CONTRACTOR IS TO REVIEW THE ENTIRE SET OF PLANS FOR COORDINATION WITH OTHER TRADES. SHOP DRAWINGS WITH ALL TRADES COORDINATED WILL BE REQUIRED.
8. THE HVAC CONTRACTOR SHALL REVIEW THE ARCHITECTURAL PLANS FOR FINAL LOCATIONS OF ALL RATED WALLS, CEILINGS, FLOORS, ETC. THE HVAC CONTRACTOR SHALL FURNISH AND INSTALL FIRE OR FIRE/SMOKE DAMPERS IN ALL RATED LOCATIONS WHETHER SHOWN ON THE MECHANICAL PLANS OR NOT.
9. CONTRACTOR SHALL COORDINATE VOLTAGE AND PHASE OF EACH PIECE OF EQUIPMENT WITH THE ELECTRICAL CONTRACTOR PRIOR TO ORDERING.
10. ALL THREE PHASE EQUIPMENT SHALL BE EQUIPPED WITH PHASE LOSS PROTECTION.
11. ALL MOTOR STARTERS SHALL BE FURNISHED BY THE MECHANICAL CONTRACTOR.
12. CONTRACTOR TO COORDINATE ALL CEILING TYPES WITH DIFFUSERS. ALL DIFFUSERS IN GYPSUM CEILING SHALL INCLUDE PLASTER FRAME.
13. ALL DISTRIBUTION DEVICES SHALL HAVE FACE OPERABLE DAMPERS. ALL DIFFUSER RUNOUTS SHALL INCLUDE SPIN–IN WITH DAMPER IN ROUND DUCTS.
14. INSULATE TOP SIDE/BACK OF ALL DIFFUSERS/GRILLES, ETC.
15. CONDENSATE DRAIN PIPING SHALL BE SLOPED A MINIMUM OF 1/8" PER FOOT AND SHALL BE SIZED PER TABLE 307.2.2 IN THE 2021 INTERNATIONAL MECHANICAL CODE UNLESS SHOWN LARGER ON PLANS.
16. ALL 3/4" AND 1" CONDENSATE DRAIN TRAPS SHALL BE EZ–TRAP OR APPROVED EQUAL WITH FLOAT SWITCH.
17. INSTALL AUXILIARY DRAIN PAN UNDER ALL UNITS MOUNTED IN ATTIC, ABOVE CEILINGS, ETC. INSTALL FLOAT SWITCH FOR UNIT SHUT DOWN IN AUXILIARY DRAIN PAN.
18. REFERENCE PLUMBING PLANS FOR CONDENSATE PIPING. IF CONDENSATE DRAINS ARE NOT SHOWN ON THE PLUMBING PLANS, ALL CONDENSATE DRAINS SHALL BE FURNISHED AND INSTALLED BY THE HVAC CONTRACTOR.
19. VERIFY WITH THE ARCHITECTURAL DRAWINGS, SIZE, LOCATION, AND MOUNTING HEIGHT OF ALL LOUVERS. VERIFY COLOR AND FINISH WITH OWNER.
20. ALL THERMOSTATS TO BE MOUNTED 4'–0" A.F.F. TO HIGHEST OPERABLE CONTROL UNLESS OTHERWISE INDICATED.
21. ALL REFRIGERANT LINES SHALL BE SIZED/APPROVED BY THE EQUIPMENT VENDOR/COMPRESSOR MANUFACTURER. ALL REFRIGERANT LINES SHALL BE INSTALLED USING INSULATED LINE CLAMPS.
22. PAINT ALL EXTERIOR EXPOSED ARMAFLEX INSULATION FOR UV PROTECTION.
23. INSULATE HOT GAS REHEAT REFRIGERANT PIPING. INTERIOR PIPING SHALL BE INSULATED WITH 1" FLEXIBLE ELASTOMERIC AND SHALL INCLUDE VAPOR BARRIER. EXTERIOR PIPING SHALL BE INSULATED WITH 2" GLASS FIBER OR 1" FLEXIBLE ELASTOMERIC AND SHALL INCLUDE VAPOR BARRIER. GLASS FIBER INSULATION SHALL INCLUDE FIELD–APPLIED ALUMINUM JACKET.
24. PORTIONS OF DUCTWORK VISIBLE THROUGH GRILLES, REGISTERS, AND DIFFUSERS IN FINISHED AREAS SHALL BE PAINTED FLAT BLACK.
25. FLEXIBLE DUCT (SUPPLY RUNOUTS ONLY) SHALL NOT EXCEED 6'–0" IN LENGTH.
26. DUCTWORK SHALL BE INSULATED IN ACCORDANCE WITH THE FOLLOWING SCHEDULE:
    - RECTANGULAR SUPPLY: 1–1/2" EXTERNAL
    - ROUND SUPPLY: 1–1/2" EXTERNAL
    - FLEXIBLE SUPPLY: 1" PRE INSULATED
    - RECTANGULAR RETURN: 1–1/2" EXTERNAL
    - OSA/EXHAUST: 1–1/2" EXTERNAL
27. DUCTWORK SHALL BE GALVANIZED AND INSTALLED IN ACCORDANCE WITH SMACNA STANDARDS.
28. LABEL ALL DUCTS WITH TYPE (SUPPLY, RETURN, ETC.) AND ARROWS INDICATING DIRECTION OF AIR FLOW. LABELS SHALL BE EVERY SIX FEET AND AT EACH CHANGE OF DIRECTION (T'S, ELBOWS, ETC.)
29. ROUND DUCT SHALL BE INSULATED WITH DUCT WRAP EQUAL TO CERTAINTEED SOFT TOUCH DUCT WRAP WITH FSK VAPOR RETARDER FACING TYPE 75 WITH MINIMUM INSTALLED R–VALUE 4.2. ROUND DUCTS LOCATED WITHIN THE ATTIC SHALL BE INSULATED WITH DUCT WRAP EQUAL TO CERTAINTEED SOFT TOUCH DUCT WRAP WITH FSK VAPOR RETARDER FACING TYPE 100 WITH MINIMUM INSTALLED R–VALUE 6.0
30. ALL OPEN ENDED DUCT SHALL BE CAPPED WITH 1/2"X1/2" WIRE MESH.
31. THE HVAC CONTRACTOR SHALL FURNISH AND INSTALL A SMOKE DETECTOR FOR FIRE SHUT DOWN IN ALL UNITS 2000 CFM AND ABOVE AND IN ALL UNITS SERVING EXIT ACCESS CORRIDORS REGARDLESS OF SIZE.
32. ALL DAMPERS INTERLOCKED WITH CARBON DIOXIDE SENSOR SHALL BE 24 VOLT MODULATING MOTORIZED DAMPER. DAMPER SHALL INCLUDE STEP DOWN TRANSFORMER 120V/24V.
33. WARRANTIES SHALL BEGIN AT FINAL ACCEPTANCE. ALL COMPRESSORS SHALL INCLUDE MIN. OF FIVE YEAR WARRANTY. ONE YEAR WARRANTY FOR LABOR, PARTS, UNITS, ETC. IS REQUIRED FOR ALL EQUIPMENT. ADDITIONALLY CONTRACTOR IS RESPONSIBLE FOR ALL PREVENTATIVE MAINTENANCE AND ROUTINE SERVICE ON INSTALLED EQUIPMENT FOR THE ONE YEAR WARRANTY PERIOD IN ORDER TO MAINTAIN ALL FACTORY/MANUFACTURER WARRANTIES.
34. INSTALL ANGLE COVER OVER CONDENSATE LINES, REFRIGERANT LINES, ETC. THAT CROSS MEZZANINE FLOOR WHERE TRIPPING MIGHT BE A HAZARD. PRIME AND PAINT ANGLE COVER SAFETY YELLOW COLOR.
35. CONTRACTOR SHALL ANCHOR OUTDOOR UNITS TO CONCRETE PAD IN ACCORDANCE WITH MANUFACTURER'S RECOMMENDATION, WIND LOAD REQUIREMENTS, AND AS PER PLANS/SPECIFICATIONS. COORDINATE CONCRETE PAD SIZE, UNIT CLEARANCES, ETC. WITH STRUCTURAL AND ARCHITECTURAL PLANS, FRAMING, ETC.
36. THE CONTRACTOR SHALL INSTALL ANY CURB–MOUNTED EQUIPMENT IN SUCH A WAY THAT NO WATER LEAKAGE IS INTRODUCED INTO THE BUILDING.
37. INSTALL SECURITY BAR GRATE IN ALL OPENINGS 6"x6" OR GREATER AT SECURE AREAS. REFERENCE HVAC PLANS FOR REQUIRED LOCATIONS AND SECURITY BAR GRATE DETAIL ON SHEET M2.3 FOR ADDITIONAL INFORMATION.
38. ALL INDOOR AND OUTDOOR UNITS SHALL BE LOCATED SO THAT MAINTENANCE CLEARANCES IN ACCORDANCE WITH MANUFACTURER'S RECOMMENDATION AND AS PER PLANS/SPECIFICATIONS ARE MAINTAINED. COORDINATE MAINTENANCE CLEARANCES WITH STRUCTURAL AND ARCHITECTURAL PLANS, FRAMING, ETC.
39. ALL COLOR/FINISH SELECTIONS SHALL BE MADE BY OWNER/ARCHITECT.
40. EXHAUST FAN CONTROL RELAYS SHALL BE WIRED TO THE NORMALLY CLOSED CONTACTS TO ALLOW THE FANS TO OPERATE IN THE EVENT THAT THE DDC CONTROLS ARE OFFLINE. EXHAUST FANS SHALL BE CONTROLLED BY THE BUILDING SCHEDULE.
41. COORDINATE DDC CONTROLLER TERMINAL ASSIGNMENTS WITH AANG DDC STANDARDS AND PRACTICES.

INTAKE VENT SCHEDULE

MARK NO.	CFM	THROAT AREA S.F.	P.D.	MATERIAL	MANUFACTURER (OR APPROVED EQUAL)	MODEL NO.	NOTES
IV 1	1,200	9.968	0.05	SPUN ALUMINUM	LOREN COOK	PR–42	SEE BELOW

1. INTAKE VENT TO INCLUDE FACTORY ROOF CURB. COORDINATE ALL ROOF CURBS WITH THE ROOFING CONTRACTOR. PRIME AND PAINT ROOF CURB AND INTAKE VENT TO MATCH ROOF.
2. INTAKE VENT TO INCLUDE FACTORY MOTORIZED DAMPER, MANUAL DAMPER, AND BIRDSCREEN.

APPROVED EQUALS: CARNES, GREENHECK, AND PENN

RELIEF VENT SCHEDULE

MARK NO.	CFM	THROAT AREA S.F.	P.D.	MATERIAL	MANUFACTURER (OR APPROVED EQUAL)	MODEL NO.	NOTES
RV 1	1,100	9.968	0.05	SPUN ALUMINUM	LOREN COOK	PR–42	SEE BELOW

1. RELIEF VENT TO INCLUDE FACTORY ROOF CURB. COORDINATE ALL ROOF CURBS WITH THE ROOFING CONTRACTOR. PRIME AND PAINT ROOF CURB AND RELIEF VENT TO MATCH ROOF.
2. RELIEF VENT TO INCLUDE FACTORY BACKDRAFT DAMPER AND BIRDSCREEN.

APPROVED EQUALS: CARNES, GREENHECK, AND PENN

OUTDOOR BOILER SCHEDULE

MARK NO.	TYPE	WORKING PRESSURE PSIG	NAT. GAS INPUT (MBH)	NAT. GAS OUTPUT (MBH)	WATER CONNECTION	GAS CONNECTION	VOLTAGE	MODEL NO. DATA		UNIT SHIPPING WEIGHT (LBS)	NOTES
								MANUFACTURER (OR APPROVED EQUAL)	UNIT MODEL NO.		
B 1	HOT WATER	160	999	962	2–1/2"	1–1/4"	120–1–60	LOCHINVAR	KBX1000–0	580	SEE BELOW

1. EACH BOILER TO INCLUDE ELECTRONIC IGNITION MODULE (3–TRY).
2. BOILER TO BE NATURAL GAS.
3. BOILER DIMENSIONS: 24"W X 45"H X 62"D
4. BOILER TO INCLUDE FACTORY OUTDOOR INSTALLATION KIT.
5. TURN DOWN: 10:1
6. AHRI THERMAL EFFICIENCY: 96%
7. BOILER TO INCLUDE BMS GATEWAY TO BACNET – FACTORY MOUNTED.
8. BOILER TO INCLUDE FACTORY SMART TOUCH.
9. BOILER TO INCLUDE ALARM WITH 4" BELL WITH SILENCE AND RESET SWITCHES.
10. BOILER TO INCLUDE FACTORY ALARM ON ANY FAILURE.
11. BOILER TO INCLUDE FACTORY LOW WATER CUT–OFF WITH MANUAL RESET.
12. BOILER TO INCLUDE STAINLESS STEEL VENT TERMINATING MINIMUM 36" ABOVE TOP OF UNIT. VENTING SHALL BE INSTALLED PER MANUFACTURER'S RECOMMENDATIONS. VENT SHALL BE TERMINATED WITH RAIN CAP IN ACCORDANCE WITH MANUFACTURER'S RECOMMENDATION.
13. BOILER TO INCLUDE HIGH LIMIT, AUTO RESET, 200°F.
14. BOILER TO INCLUDE LOW GAS PRESSURE SWITCH, MANUAL RESET.
15. BOILER TO INCLUDE HIGH GAS PRESSURE SWITCH, MANUAL RESET.
16. BOILER TO INCLUDE EMERGENCY SHUT–DOWN SWITCH.
17. BOILER TO INCLUDE CONDENSATE NEUTRALIZATION KIT.
18. CONDENSATE TRAP, DRAIN LINES, ETC. SHALL BE HEAT TRACED. 115–1–60 OUTLET IS REQUIRED FOR HEAT TRACE. REFERENCE ELECTRICAL PLANS FOR ADDITIONAL INFORMATION.
19. CONTRACTOR SHALL ARRANGE FOR THE STATE OF ALABAMA BOILER AND PRESSURE VESSEL SAFETY DIVISION INSPECTOR TO VISIT THE JOB SITE TO INSPECT THE BOILER INSTALLATION. THE CONTRACTOR SHALL FURNISH A WRITTEN REPORT OF FINDINGS & COMPLY WITH ALL COMMENTS.
20. ALL EXTERIOR EXPOSED PIPING SHALL BE HEAT TRACED.

APPROVED EQUALS: LAARS AND RAYPACK

CODES & STANDARDS

- **2021 INTERNATIONAL PLUMBING CODE**
- **2021 INTERNATIONAL MECHANICAL CODE**
- **2021 INTERNATIONAL FUEL GAS CODE**
- **2010 ADA STANDARDS FOR ACCESSIBLE DESIGN**
- **ASHRAE 90.1-2013 ENERGY STANDARD**

CEILING MOUNTED ELECTRIC HEATER SCHEDULE

MARK NO.	NOMINAL CFM	VOLTAGE	K.W.	BTU/HR (000)	AMPS	MANUFACTURER (OR APPROVED EQUAL)	UNIT MODEL NO.	UNIT WEIGHT (LBS)	NOTES
CEH 1	300	208–1–60	2.0	6.8	9.6	BERKO	FFCH–548	27	SEE BELOW
CEH 2	300	208–1–60	2.0	6.8	9.6	BERKO	FFCH–548	27	SEE BELOW

1. UNIT TO INCLUDE A RECESS MOUNTING ENCLOSURE.
2. UNIT TO INCLUDE AUTOMATIC THERMAL CUTOUT AND POWER DISCONNECT.
3. UNIT TO INCLUDE AN INTEGRAL THERMOSTAT.

APPROVED EQUALS: INDEECO, MARKEL, QMARK, AND RAYWALL

HVAC DRAWING INDEX

SHEET NO.	SHEET TITLE
M1.1	HVAC LEGEND, NOTES, AND SCHEDULES
M1.2	HVAC SCHEDULES
M1.3	HVAC SCHEDULES AND DETAILS
M2.1	HVAC DETAILS
M2.2	HVAC DETAILS
M2.3	HVAC DETAILS
M2.4	HVAC DETAILS
M2.5	HVAC DETAILS
M2.6	HVAC DETAILS AND COMPLIANCE CALCULATIONS
M3.1	HVAC PLANS – BASE BID
M4.1	HVAC CHILLED WATER PIPING PLANS – BASE BID
M5.1	HVAC HOT WATER PIPING PLANS – BASE BID
M6.1	HVAC CHILLED WATER PIPING RISER DIAGRAM – BASE BID
M6.2	HVAC HOT WATER PIPING RISER DIAGRAM – BASE BID

WALL MOUNTED ELECTRIC HEATER SCHEDULE

MARK NO.	NOMINAL CFM	VOLTAGE	WATTS	BTU/HR	AMPS	MANUFACTURER (OR APPROVED EQUAL)	UNIT MODEL NO.	UNIT WEIGHT (LBS)	NOTES
WEH 1	100	208–1–60	1500	5,120	7.2	BERKO	FRC4024	25	SEE BELOW

1. UNIT TO INCLUDE BUILT–IN TAMPER–PROOF THERMOSTAT.
2. UNIT TO INCLUDE FACTORY DISCONNECT SWITCH – MOUNTED BEHIND FRONT GRID PANEL.
3. UNIT TO INCLUDE THERMAL CUTOUT.
4. UNIT TO INCLUDE SEMI–RECESSED MOUNTING FRAME.
5. UNIT TO BE MOUNTED AT 16" AFF.

APPROVED EQUALS: INDEECO, MARKEL, QMARK, AND RAYWALL

HVAC LEGEND, NOTES, AND SCHEDULES

WHORTON ENGINEERING, INC.
HVAC – PLUMBING – PROCESS CONTROL
RANDALL WHORTON, P.E.
PHONE: (256) 820–9897
25 SUMMERALL GATE ROAD
ANNISTON, ALABAMA 36205
WHORTON ENGINEERING PROJECT NO. 24135

SS&L
ARCHITECTURE & INTERIOR DESIGN
1115 South Court Street | Montgomery, AL 36104
Tel. 334. 263. 5162 | WWW.SSLARCH.COM

Rev.	Description	Date

Job Number: 12072
Date: JUNE 2024
Drawn By: JH
Checked By: RDW

Project Title: New Security Building
117th Air Refueling Wing
Birmingham, AL

Sheet Title: HVAC LEGEND, NOTES, AND SCHEDULES

Sheet Number: M1.1

STATE OF ALABAMA REGISTERED PROFESSIONAL ENGINEER No.14192 RANDALL D. WHORTON
06–20–2024

VARIABLE AIR VOLUME BOX SCHEDULE (AHU-1)

MARK NO.	TYPE	UNIT	INLET SIZE	OUTLET SIZE	PRIMARY AIRFLOW MAX CFM	PRIMARY AIRFLOW MIN CFM	PRIMARY AIRFLOW INLET S.P.	HEATING COIL CFM	HEATING COIL MBH	HEATING COIL ENT. AIR DB/WB	HEATING COIL LVG. AIR DB/WB	HEATING COIL GPM	HEATING COIL EWT (DEG. F)	HEATING COIL LWT (DEG. F)	HEATING COIL WPD	HEATING COIL APD	HEATING COIL ROWS	VOLTS	MANUFACTURER (OR APPROVED EQUAL)	UNIT MODEL NO.	NOTES
VAV 1-1	SINGLE	12	12	16X15	1,000	500	1	500	25.6	53	100.1	1.0	180	127.9	0.14	0.23	2	24	TITUS	DESV	SEE BELOW
VAV 1-2	SINGLE	8	8	12X10	400	100	1	220	11.6	53	101.5	0.5	180	132.7	0.04	0.16	2	24	TITUS	DESV	SEE BELOW
VAV 1-3	NOT USED																				
VAV 1-4	SINGLE	12	12	16X15	1,200	350	1	700	36.6	53	101.2	2.0	180	143.0	0.55	0.32	2	24	TITUS	DESV	SEE BELOW
VAV 1-5	SINGLE	10	10	14X13	500	150	1	275	11.6	53	92.0	1.0	180	156.2	0.11	0.06	1	24	TITUS	DESV	SEE BELOW
VAV 1-6	SINGLE	10	10	14X13	600	100	1	200	10.0	53	99.3	1.0	180	159.4	0.11	0.08	1	24	TITUS	DESV	SEE BELOW
VAV 1-7	SINGLE	6	6	12X8	160	75	1	135	5.8	53	92.9	0.5	180	156.1	0.12	0.03	1	24	TITUS	DESV	SEE BELOW
VAV 1-8	SINGLE	6	6	12X8	250	100	1	200	12.2	53	109.0	1.0	180	155.1	0.12	0.12	2	24	TITUS	DESV	SEE BELOW
VAV 1-9	SINGLE	12	12	16X15	950	300	1	500	25.6	53	100.1	1.0	180	127.9	0.14	0.22	2	24	TITUS	DESV	SEE BELOW
VAV 1-10	SINGLE	6	6	12X8	150	75	1	100	5.1	53	99.9	0.5	180	159.1	0.12	0.02	1	24	TITUS	DESV	SEE BELOW
VAV 1-11	SINGLE	6	6	12X8	250	100	1	200	12.2	53	109.0	1.0	180	155.1	0.12	0.12	2	24	TITUS	DESV	SEE BELOW
VAV 1-12	SINGLE	8	8	12X10	350	100	1	270	15.7	53	106.7	1.0	180	147.8	0.17	0.13	2	24	TITUS	DESV	SEE BELOW
VAV 1-13	SINGLE	6	6	12X8	275	100	1	225	12.9	53	105.8	1.0	180	153.6	0.12	0.14	2	24	TITUS	DESV	SEE BELOW
VAV 1-14	SINGLE	6	6	12X8	150	75	1	100	5.1	53	99.9	0.5	180	159.1	0.12	0.02	1	24	TITUS	DESV	SEE BELOW
VAV 1-15	SINGLE	10	10	14X13	600	200	1	450	21.8	53	97.7	1.0	180	135.4	0.12	0.17	2	24	TITUS	DESV	SEE BELOW
VAV 1-16	SINGLE	6	6	12X8	150	75	1	100	5.1	53	99.9	0.5	180	159.1	0.12	0.02	1	24	TITUS	DESV	SEE BELOW
VAV 1-17	SINGLE	6	6	12X8	150	75	1	100	5.1	53	99.9	0.5	180	159.1	0.12	0.02	1	24	TITUS	DESV	SEE BELOW
TOTAL					7,135	2,475		4,275	222.0			14.0									

1. UNIT PRESSURE INCLUDES VALVE, CABINET, HEATING COIL, ETC.
2. UNIT TO INCLUDE DDC BACNET COMMUNICATION AND SHALL BE INTERFACED TO THE BUILDING AUTOMATION SYSTEM.
3. UNIT TO INCLUDE CONTROLLER AND THERMOSTAT.
4. FIELD VERIFY INSTALLATION MODE (RIGHT OR LEFT).
5. UNIT TO INCLUDE PERFORATED LINER.
6. 24V POWERED CONTROLS/CONNECTION.
7. UNIT TO INCLUDE FACTORY SOUND ATTENUATION.

APPROVED EQUALS: CARRIER AND PRICE

HEAT PUMP EQUIPMENT SCHEDULE

MARK NO.	NOMINAL FAN CFM	MINIMUM OSA CFM	EXT. STATIC (IN. W.G.)	COOLING CAPACITY TOTAL CAP. MBH	COOLING CAPACITY SENS. CAP. MBH	COOLING CAPACITY COND. E.A.T.	COOLING CAPACITY EVAP. E.W.B. TEMP	COOLING CAPACITY MIN. SEER	COOLING CAPACITY MIN. IEER	HEATING CAPACITY LOW TEMP 17° E.A.T. MBH	HEATING CAPACITY HIGH TEMP 47° E.A.T. MBH	HEATING CAPACITY MIN. HSPF	MODEL NO. DATA MANUFACTURER (OR APPROVED EQUAL)	MODEL NO. DATA INDOOR UNIT MODEL NO.	MODEL NO. DATA OUTDOOR UNIT MODEL NO.	APPROXIMATE REFRIG. PIPING SIZE GAS (IN. O.D.)	APPROXIMATE REFRIG. PIPING SIZE LIQUID (IN. O.D.)	NOTES
HP 1	1,200	200	0.8"	34.6	27.9	95	80/67	22.5	N/A	32.8	35.0	11.0	CARRIER	FE4ANB005	25VNA436	7/8	3/8	SEE BELOW

1. UNIT TO INCLUDE DDC CONTROLS BASED ON HONEYWELL SPYDER PUL6438S/SR PROGRAMMABLE CONTROLLER WITH HONEYWELL TR-71H THERMOSTAT.
2. UNIT TO INCLUDE OUTDOOR THERMOSTAT.
3. UNIT TO INCLUDE CONDENSER HAIL GUARD AND FILTER RACK.
4. UNIT TO INCLUDE FACTORY HOT GAS REHEAT FOR DEHUMIDIFICATION CONTROL AND RAWAL APR CONTROL VALVE.
5. REFRIGERANT R-410A.
6. UNIT TO INCLUDE LOW AMBIENT CONTROLS TO 0°F.
7. UNIT TO INCLUDE 2" FILTERS.
8. UNIT TO INCLUDE BIOCLIMATIC (OR APPROVED EQUAL) BI-POLAR IONIZATION UNIT (NEEDLEPOINT) MOUNTED IN UNIT RETURN DUCT PER MANUFACTURER'S RECOMMENDATION. IONIZATION UNIT SHALL BE POWERED FROM ASSOCIATED HEAT PUMP.
9. VERIFY FINAL REFRIGERANT PIPING SIZE AND LENGTH WITH MANUFACTURER.
10. ALL UNITS TO INCLUDE MERV 13 PLEATED FILTER.
11. ALL UNITS TO INCLUDE UV-C PROTECTION. EQUIPMENT SHALL BE FRESH-AIRE UV AIRBORNE DUCT SYSTEM MODEL TUV-C-ADS (OR APPROVED EQUAL).
12. ALL UNITS SHALL BE ASHRAE 90.1-2013 COMPLIANT.

APPROVED EQUALS: BRYANT, FRIEDRICH, AND LENNOX

HEAT PUMP EQUIPMENT ELECTRICAL SCHEDULE

MARK NO.	OUTDOOR UNIT VOLTAGE	OUTDOOR UNIT COMPRESSOR R.L.A.	OUTDOOR UNIT FAN F.L.A.	OUTDOOR UNIT MINIMUM CIRCUIT AMPS	OUTDOOR UNIT MAXIMUM OVERCURRENT PROTECTION	OUTDOOR UNIT WEIGHT (LBS.)	INDOOR UNIT VOLTAGE	INDOOR UNIT FAN H.P.	INDOOR UNIT ELECTRIC STRIP HEAT K.W.	INDOOR UNIT MINIMUM CIRCUIT AMPS	INDOOR UNIT MAXIMUM OVERCURRENT PROTECTION	INDOOR UNIT WEIGHT (LBS.)	SINGLE POINT CONNECTION
HP 1	208/230-1-60	13.7	0.88	18	30	367	208/230-3-60	1/2	6.8/9.0	32/34.5	35/35	175	YES

DEHUMIDIFIER EQUIPMENT SCHEDULE

MARK NO.	NOMINAL FAN CFM	REFRIGERANT	WATER REMOVAL 80°F 60% RH	OPERATING RANGE	ELECTRICAL POWER SUPPLY	ELECTRICAL AMPS	MODEL NO. DATA MANUFACTURER (OR APPROVED EQUAL)	MODEL NO. DATA UNIT MODEL NO.	NOTES
DH 1	495	R-410A	205 PINTS/DAY	49°-95°F	115-1-60	13.2	THERMA-STOR	SANTA-FE ULTRA205	SEE BELOW
DH 2	495	R-410A	205 PINTS/DAY	49°-95°F	115-1-60	13.2	THERMA-STOR	SANTA-FE ULTRA205	SEE BELOW
DH 3	495	R-410A	205 PINTS/DAY	49°-95°F	115-1-60	13.2	THERMA-STOR	SANTA-FE ULTRA205	SEE BELOW

1. UNIT SHALL INCLUDE FULL DDC CONTROLS UTILIZING A HONEYWELL SPYDER PUL4024S (OR EQUAL) PROGRAMMABLE DDC CONTROLLER WITH A HONEYWELL TR-42H (OR EQUAL) COMMUNICATING TEMPERATURE/HUMIDITY WALL MODULE INTERFACED TO THE BUILDING AUTOMATION SYSTEM.
2. UNIT TO INCLUDE FACTORY DUCT COLLARS (10").
3. UNIT TO INCLUDE FACTORY MERV - 13 FILTER.
4. UNIT TO INCLUDE BIOCLIMATIC (OR APPROVED EQUAL) BI-POLAR IONIZATION UNIT MOUNTED IN UNIT SUPPLY DUCT AND SHALL BE POWERED FROM ASSOCIATED DEHUMIDIFIER AND SHALL INCLUDE ALL NECESSARY TRANSFORMERS, INTERLOCK, ETC.
5. UNIT TO INCLUDE FACTORY CONDENSATE PUMP KIT.

PUMP SCHEDULE

MARK NO.	SERVICE	TYPE	GPM	TOTAL HEAD FT. WG.	MAXIMUM H.P.	MINIMUM EFFICIENCY	VOLTAGE	MANUFACTURER (OR APPROVED EQUAL)	MODEL NO.	NOTES
CWP 1	CHILLED WATER	FRAME MOUNTED	190	60	5	76%	208-3-60	TACO	FI-2510C	SEE BELOW
CWP 2	CHILLED WATER	FRAME MOUNTED	190	60	5	76%	208-3-60	TACO	FI-2510C	SEE BELOW
HWP 1	HOT WATER	FRAME MOUNTED	60	50	1.5	55%	208-3-60	TACO	FI-1507	SEE BELOW
HWP 2	HOT WATER	FRAME MOUNTED	60	50	1.5	55%	208-3-60	TACO	FI-1507	SEE BELOW
BP 1	BOILER	VERTICAL IN-LINE	60	30	0.75	63%	208-3-60	TACO	1635	SEE BELOW

1. FACTORY MOUNTING FRAME TO BE PROVIDED, DOUBLE SUCTION DIFFUSER.
2. EACH PUMP SYSTEM SHALL INCLUDE VARIABLE SPEED PUMPING COMPLETE WITH ALL CONTROLS AND INTERFACE TO BUILDING AUTOMATION SYSTEM. ELECTRONIC VARIABLE SPEED CONTROLS SHALL BE BY BELL AND GOSSETT, ABS, OR AN APPROVED EQUAL. SYSTEM SHALL BE FURNISHED AND INSTALLED IN ACCORDANCE WITH MANUFACTURER'S RECOMMENDATIONS AND INSTRUCTIONS FOR A VARIABLE SPEED INSTALLATION. FULL COORDINATION WITH THE EQUIPMENT SUPPLIER IS REQUIRED. THE VARIABLE SPEED DRIVE SYSTEM SHALL REQUIRE ONLY SINGLE POINT ELECTRICAL SERVICE AND SHALL INCLUDE A FACTORY DISCONNECT.
3. CWP-1 AND CWP-2 SHALL BE LEAD/LAG AND ROTATE LEAD PUMP WEEKLY.
4. HWP-1 AND HWP-2 SHALL BE LEAD/LAG AND ROTATE LEAD PUMP WEEKLY.
5. BP-1 TO BE MOUNTED AT OUTDOOR BOILER. FURNISH AND INSTALL IN WEATHERPROOF HOUSING.
6. ALL EXPOSED EXTERIOR PIPING SHALL BE HEAT TRACED.
7. PUMPS ARE SIZED FOR PHASE 2 ADDITION.

APPROVED EQUALS: BELL AND GOSSETT, ARMSTRONG, AURORA, GRUNDFOS, AND PACO

AIR / DIRT SEPARATOR SCHEDULE

MARK NO.	SYSTEM	SIZE	GPM	MAX. PD (FT.)	TYPE	MANUFACTURER (OR APPROVED EQUAL)	MODEL NO.	NOTES
AS 1	HVAC WATER	4"	60	1.0	TANK - HIGH VELOCITY (AIR/DIRT)	SPIROTHERM	SPIROVENT VDN400	SEE BELOW
AS 2	HVAC WATER	2-1/2"	60	1.0	TANK - HIGH VELOCITY (AIR/DIRT)	SPIROTHERM	SPIROVENT VDN250	SEE BELOW

1. ASME CERTIFIED
2. AIR/DIRT SEPARATOR WITH REMOVABLE HEAD.

EXPANSION TANK SCHEDULE

MARK NO.	SYSTEM	TANK VOLUME (GAL)	SHIPPING WEIGHT (LBS)	CHARGE PRESSURE PSI	DIAMETER (IN.)	HEIGHT (IN.)	MANUFACTURER (OR APPROVED EQUAL)	MODEL NO.	NOTES
ET 1	HVAC WATER	79	320	125	20	57-3/4	TACO	CA300-125	SEE BELOW
ET 2	HVAC WATER	37	195	125	20	40-1/8	TACO	CA-140-125	SEE BELOW

1. ASME CERTIFIED

HVAC SCHEDULES

WHORTON ENGINEERING, INC.
HVAC - PLUMBING - PROCESS CONTROL
RANDALL WHORTON, P.E.
PHONE: (256) 820-9897
25 SUMMERALL GATE ROAD
ANNISTON, ALABAMA 36205

WHORTON ENGINEERING PROJECT NO. 24135

SS&L
ARCHITECTURE & INTERIOR DESIGN
1115 South Court Street | Montgomery, AL 36104
Tel. 334.263.5162 | WWW.SSLARCH.COM

Rev.	Description	Date

Job Number 12072
Date JUNE 2024
Drawn By JH
Checked By RDW

Project Title
New Security Building
117th Air Refueling Wing
Birmingham, AL.

Sheet Title
HVAC SCHEDULES

Sheet Number
M1.2

ALABAMA REGISTERED No.14192 PROFESSIONAL ENGINEER RANDALL D. WHORTON
06-20-2024

VARIABLE AIR VOLUME AIR HANDLING UNIT SCHEDULE

MARK NO.	TYPE	MAX CFM	OPERATING CFM	MIN CFM	OSA CFM	EXT STATIC (IN WC)	MOTOR			COOLING COIL										FILTERS		MANUFACTURER (OR APPROVED EQUAL)	UNIT MODEL NO.	NOTES
							BHP	VOLTS	PHASE	TOTAL MBH	SENS MBH	ENT. AIR DB/WB	LVG. AIR DB/WB	GPM	EWT (DEG. F)	LWT (DEG. F)	WPD (FT WG)	APD	ROWS	TYPE	EFFICIENCY			
AHU 1	AERO	7,890	6,885	2,500	1,200	3	7.5	208	3	288.8	203.3	80.4/66.8	52.53/52.31	57.6	44	54	8.0	0.82	6	4" ANGLE	MERV 13	CARRIER	39MN SIZE 14W	SEE BELOW

1. UNIT TO INCLUDE BIOCLIMATIC (OR APPROVED EQUAL) BI-POLAR IONIZATION UNIT (NEEDLEPOINT) MOUNTED IN UNIT RETURN DUCT PER MANUFACTURER'S RECOMMENDATION. IONIZATION UNIT SHALL BE POWERED FROM ASSOCIATED AIR HANDLER.
2. UNIT TO BE COMPLETELY INTERFACED TO THE BUILDING AUTOMATION SYSTEM.
3. UNIT TO INCLUDE UV-C PROTECTION. EQUIPMENT SHALL BE FRESH-AIRE UV (OR APPROVED EQUAL).
4. COIL MAX LEAVING AIR TEMPERATURE SHALL BE 53 DEGREES.
5. UNIT TO INCLUDE THREE WAY CHILLED WATER VALVE.

APPROVED EQUALS: KLIMOR AND MCQUAY

AIR COOLED CHILLER NOTES (ACC-1)

1. DIMENSIONS SHOWN ARE IN INCHES.
2. DO NOT CAP OR OTHERWISE OBSTRUCT THE LIQUID LINE TEMPERATURE RELIEF.
3. 7/8" DIAMETER PILOT HOLE PROVIDED FOR LOCATION FIELD POWER WIRING ACTUAL HOLE REQUIRED DEPENDS ON FIELD WIRING SIZING.
4. DIAMETER 0.5 HOLE AND 0.8 X 0.4 SLOT USED FOR MOUNTING UNIT ON FRONT AND REAR BASE RAIL.
5. UNIT MUST HAVE SERVICE CLEARANCES AS FOLLOWS:
   TOP – DO NOT RESTRICT.
   COIL SIDE – 42" FROM SOLID SURFACE.
   PANEL SIDE – 48" PER NEC.
6. CHILLER MANUFACTURER DOES NOT RECOMMEND INSTALLATION IN A PIT.
7. UNIT CAN BE HANDLED USING THE FORK TRUCK LIFT POCKETS.
8. WATER CONNECTIONS RECESSED 2-1/8" INSIDE UNIT. ALL WATER DRAIN AND VENTING HOLES ARE 1/4" NPT.

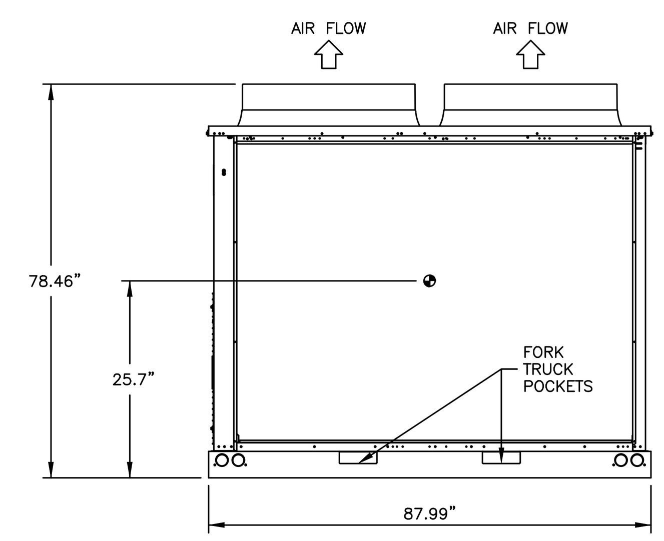

REAR VIEW

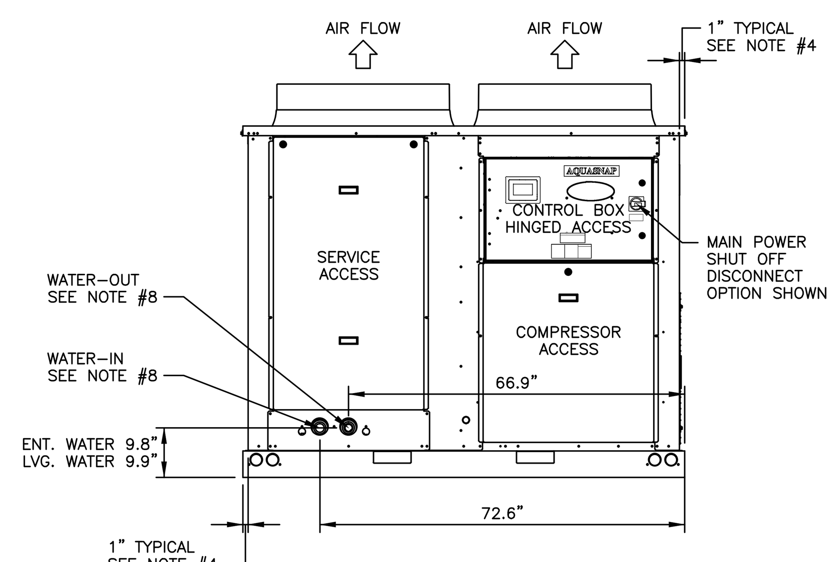

FRONT VIEW

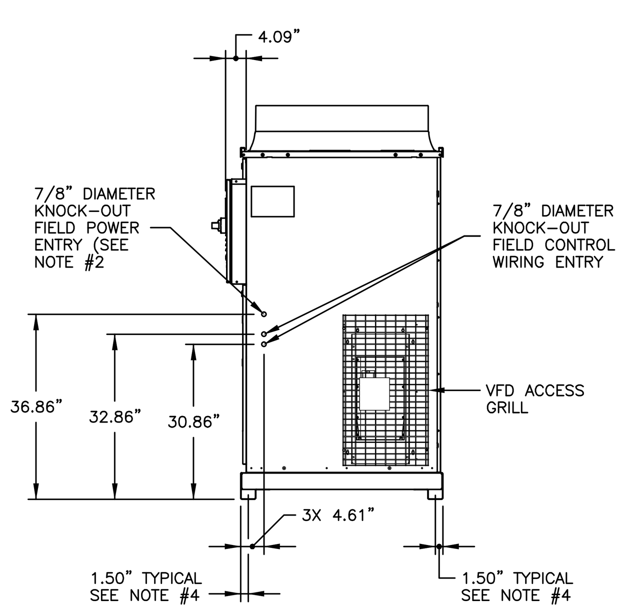

RIGHT SIDE VIEW

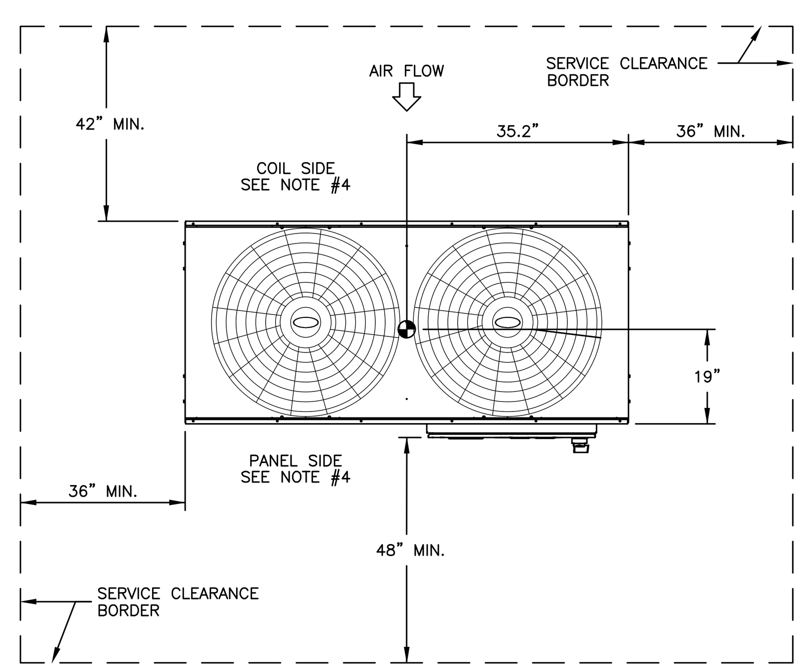

PLAN VIEW

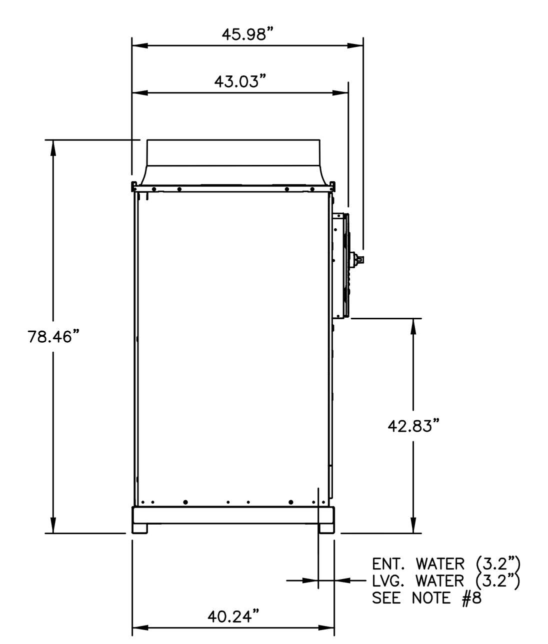

LEFT SIDE VIEW

AIR COOLED CHILLER DETAILS (ACC-1)

NOT TO SCALE

ABBREVIATIONS

EA:	EXHAUST AIR TO OUTSIDE
OA:	OUTSIDE AIR INTAKE
RA:	ROOM AIR TO BE EXHAUSTED
FA:	FRESH AIR TO INSIDE

INSTALLATION ORIENTATION

UNIT MAY BE INSTALLED IN ANY ORIENTATION.

SEE HVAC PLANS FOR ADDITIONAL INFORMATION.

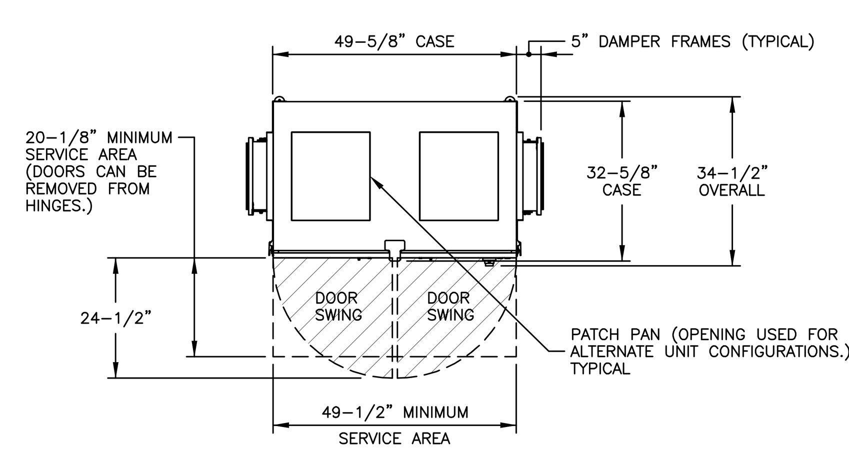

TOP VIEW

ENERGY RECOVERY VENTILATION UNIT (ERV-1)

NOTES

1. UNLESS OTHERWISE SPECIFIED, DIMENSIONS ARE ROUNDED TO THE NEAREST EIGHTH OF AN INCH.
2. SPECIFICATIONS MAY BE SUBJECT TO CHANGE WITHOUT NOTICE.
3. MINIMUM DUCT CLEARANCE FROM DAMPER BLADE WHEN FULLY OPENED TO BE 2". SMACNA RULES APPLY.

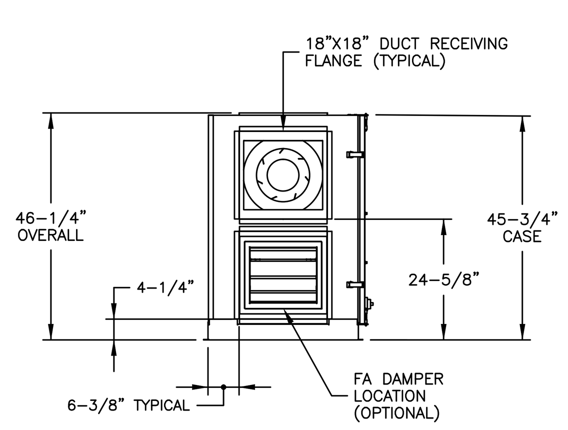

LEFT VIEW

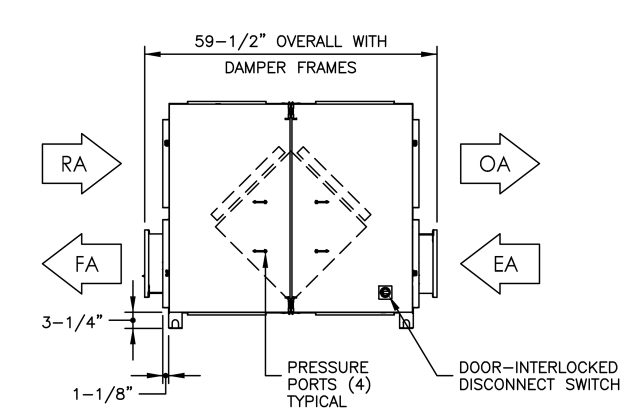

FRONT VIEW

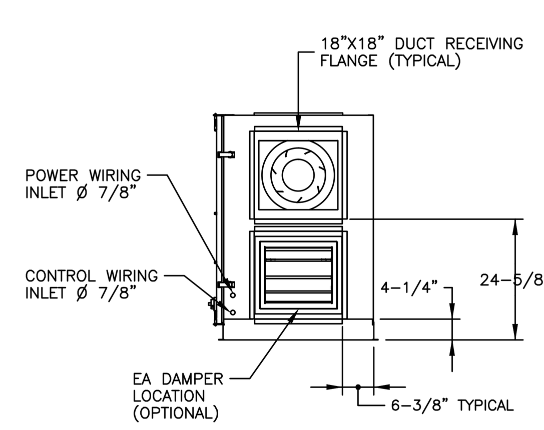

RIGHT VIEW

ENERGY RECOVERY VENTILATION UNIT - HE1.5XINV (ERV-1)

NOT TO SCALE

AIR COOLED CHILLER SCHEDULE

MARK NO.	NOMINAL TONS	MIN. NOMINAL TONS	REFRIGERANT	VOLTAGE	EVAPORATOR					CONDENSER		MANUFACTURER (OR APPROVED EQUAL)	UNIT MODEL NO.	NOTES
					EER	ENTERING WATER (°F)	LEAVING WATER (°F)	GPM	MAX PD (FT.)	ENTERING AIR (°F)	CFM			
ACC 1	30	30	R-32	208/230-3-60	10.39	54°	44°	70.75	13.5	95°	21,052	CARRIER	30RC-030561-013	SEE BELOW

CHILLER OPTIONS

1. MINIMUM LOAD CONTROL.
2. FULL UNIT ARCHITECTURAL LOUVERS.
3. VICTAULIC CONNECTION.
4. FREEZE PROTECTION.
5. SINGLE POINT POWER.
6. FLOW SWITCH.
7. CIRCUIT BREAKER.
8. REFRIGERANT ISOLATION VALVES.
9. SECURITY GRILLE PACKAGE.
10. LOW AMBIENT HEAD PRESSURE CONTROL.
11. VARIABLE SPEED CONDENSER FAN.
12. DIGITAL COMPRESSOR.
13. UNIT DIMENSIONS: 88" W X 43" L X 78" H.
14. UNIT OPERATING WEIGHT: 1,418 LBS.
15. UNIT SHALL BE ASHRAE 90.1-2013 COMPLIANT.
16. ALL EXTERIOR EXPOSED PIPING SHALL BE HEAT TRACED.
17. MIN. FLUID FLOW = 36 GPM.

CHILLER ELECTRICAL

1. ACC-1: MCA = 146.6 AMPS, MOCP = 200 AMPS, REC FUSE SIZE = 175 AMPS.
2. CONTROL CIRCUIT: 120-1-60
3. ELECTRIC HEAT TRACE: 115-1-60

CHILLER CONTROLS

1. UNIT SHALL BE COMPLETELY INTERFACED TO THE BUILDING AUTOMATION SYSTEM.

BUFFER TANK (BT-1)

1. BUFFER TANK (BT-1) SHALL BE 500 GALLON EQUAL TO TACO MODEL BTH500F4-125N AND SHALL INCLUDE INSULATION AND ALUMINUM JACKET FOR OUTDOOR INSTALLATION. BUFFER TANK SHALL BE HEAT TRACED WITH ELECTRIC CABLE.

APPROVED EQUALS: DAIKIN MCQUAY, DUNHAM-BUSH, AND SMARDT

PROVIDE AND INSTALL MANUFACTURER'S STANDARD CHILLER ENCLOSURE LOUVER KIT TO MEET UFC 4-010-01.

HYDRONIC INDOOR UNIT SCHEDULE (CEILING CASSETTE)

MARK NO.	CFM	COOLING COIL							HEATING COIL				MOTOR DATA		UNIT WEIGHT (LBS)	MANUFACTURER (OR APPROVED EQUAL)	UNIT MODEL NO.	NOTES
		TOTAL MBH	SENS MBH	ENT. AIR DB	GPM	EWT (DEG. F)	LWT (DEG. F)	WPD (FT.)	MBH	E.A.T. (DEG. F)	GPM	MAX WPD (FT.)	HP	VOLTAGE				
CS 3	630	11.3	9.8	75	2.3	45	55	2.31	24.8	70	2.5	2.31	1/8	115-1-60	45	CARRIER	42WKN18	SEE BELOW

1. ALL UNITS TO INCLUDE INTERNAL FACTORY CONDENSATE PUMP.
2. ALL UNITS TO INCLUDE BIOCLIMATIC (OR APPROVED EQUAL) BI-POLAR IONIZATION UNIT MOUNTED INSIDE CEILING CASSETTE PER MANUFACTURER'S RECOMMENDATION. IONIZATION UNIT SHALL BE POWERED FROM ASSOCIATED UNIT.
3. ALL UNITS TO INCLUDE UV-C PROTECTION. EQUIPMENT SHALL BE FRESH-AIRE UV (OR APPROVED EQUAL).
4. CASSETTE UNIT FRAME SHALL NOT IMPEDE ACCESS TO ADJACENT ITEMS SUCH AS CEILING LIGHTS, ETC.
5. ALL UNITS TO BE COMPLETELY INTERFACED TO THE BUILDING AUTOMATION SYSTEM.
6. UNIT TO INCLUDE FACTORY TWO WAY CHILLED WATER VALVE AND HOT WATER VALVE.
7. UNIT TO INCLUDE FACTORY HOT WATER HEATING COIL.
8. UNIT TO INCLUDE FACTORY MICROPROCESSOR CONTROLS.
9. UNIT TO INCLUDE MERV 10 FILTER.

APPROVED EQUALS: MODINE

ENERGY RECOVERY VENTILATION UNIT SCHEDULE

MARK NO.	TYPE	OSA CFM	EXHAUST CFM	EXT STATIC (IN WC)	MINIMUM EFFICIENCY	MOTOR			MANUFACTURER (OR APPROVED EQUAL)	UNIT MODEL NO.	NOTES
						HP	VOLTS	PHASE			
ERV 1	VERTICAL	1,200	1,100	1	70%	1	208	3	RENEWAIRE	HE1.5XINV	SEE BELOW

1. UNIT TO INCLUDE BIOCLIMATIC (OR APPROVED EQUAL) BI-POLAR IONIZATION UNIT (NEEDLEPOINT) MOUNTED IN UNIT RETURN DUCT PER MANUFACTURER'S RECOMMENDATION. IONIZATION UNIT SHALL BE POWERED FROM ASSOCIATED AIR HANDLER.
2. UNIT TO BE COMPLETELY INTERFACED TO THE BUILDING AUTOMATION SYSTEM. UNIT SHALL INCLUDE FACTORY PREMIUM CONTROLS WITH BACNET FOR FULL INTERFACE TO THE BUILDING AUTOMATION SYSTEM.
3. STATIC PLATE, HEAT AND HUMIDITY TRANSFER.
4. UNIT TO INCLUDE OUTSIDE AIR AND EXHAUST AIR MOTORIZED INSULATED LOW LEAKAGE DAMPERS.
5. SUMMER INDOOR DESIGN: 75°F D.B., 50% RH – WINTER INDOOR DESIGN: 72°F D.B., 35% RH.
6. UNIT TO INCLUDE MODULATING FAN VFD'S
7. UNIT TO INCLUDE DIRTY FILTER SENSORS (OUTDOOR AND EXHAUST).
8. SUBMITTAL SHALL INCLUDE WINTER EAT OF 20.8 DEGREES.
9. SUBMITTAL TO INCLUDE ASHRAE SUMMER DESIGN (95.6/74.6), DEHUMIDIFICATION (82.8/77.67) AND EVAPORATION (88.5/78.4) DESIGN FOR OUTSIDE AIR CONDITIONS.
10. UNIT SHALL INCLUDE FACTORY LOW LEAKAGE MOTORIZED ISOLATION DAMPERS (FA AND EA).
11. UNIT SHALL INCLUDE FACTORY INSTALLED VFD FOR SOFT START.
12. UNIT ERV-3 SHALL BE PLACED IN OCCUPIED MODE BASED ON ROOM OCCUPANCY. INTERFACE ROOM OCCUPANCY SENSORS (SEE ELECTRICAL) TO THE BUILDING AUTOMATION SYSTEM.
13. UNIT SHALL BE ASHRAE 90.1-2013 COMPLIANT.

APPROVED EQUALS: CAPTIVE AIRE, LOREN COOK, AND SEMCO

HVAC SCHEDULES AND DETAILS

WHORTON ENGINEERING, INC.
HVAC – PLUMBING – PROCESS CONTROL
RANDALL WHORTON, P.E.
PHONE: (256) 820-9897
25 SUMMERALL GATE ROAD
ANNISTON, ALABAMA 36205
WHORTON ENGINEERING PROJECT NO. 24135

SS&L
ARCHITECTURE & INTERIOR DESIGN
1115 South Court Street | Montgomery, AL 36104
Tel. 334. 263. 5162 | WWW.SSLARCH.COM

Rev.	Description	Date

Job Number 12072

Date JUNE 2024

Drawn By JH

Checked By RDW

Project Title

New Security Building
117th Air Refueling Wing
Birmingham, AL

Sheet Title
HVAC SCHEDULES AND DETAILS

Sheet Number
M1.3

ALABAMA No.14192 PROFESSIONAL ENGINEER RANDALL D. WHORTON
06-20-2024

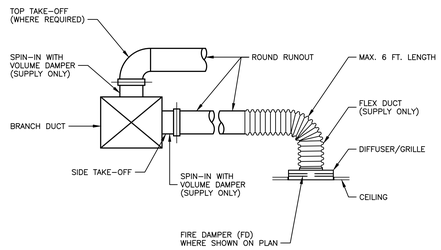

DIFFUSER / GRILLE RUNOUT DETAIL

NOT TO SCALE

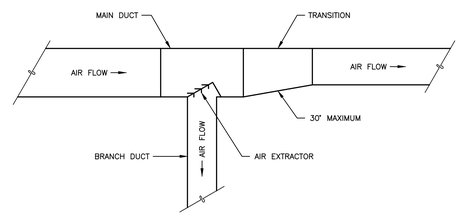

TYPICAL DUCT TAKE OFF DETAIL

NOT TO SCALE

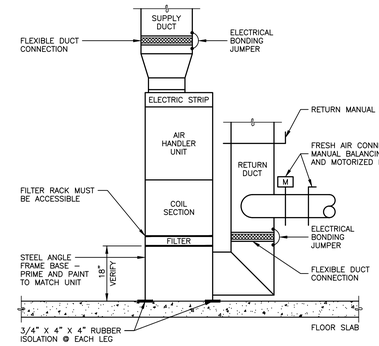

TYPICAL SECTION AT INDOOR UNIT

NOT TO SCALE

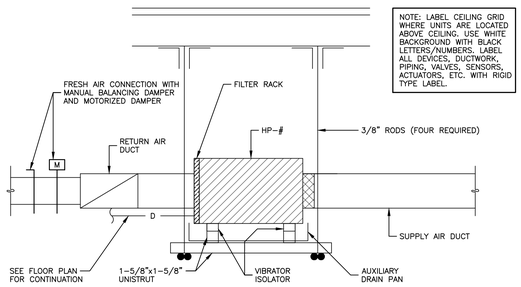

TYPICAL SECTION AT HORIZONTAL HEAT PUMP

NOT TO SCALE

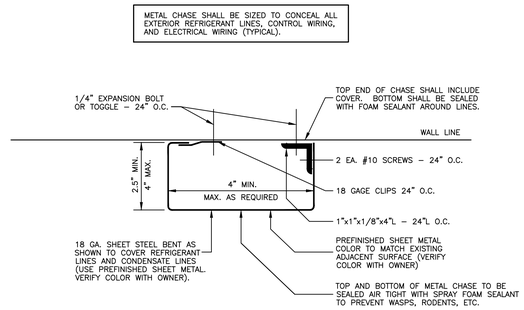

TYPICAL SECTION THRU METAL CHASE

NOT TO SCALE

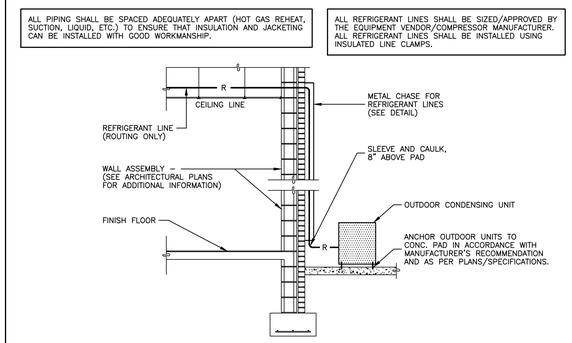

REFRIGERANT LINE ROUTING DETAIL

NOT TO SCALE

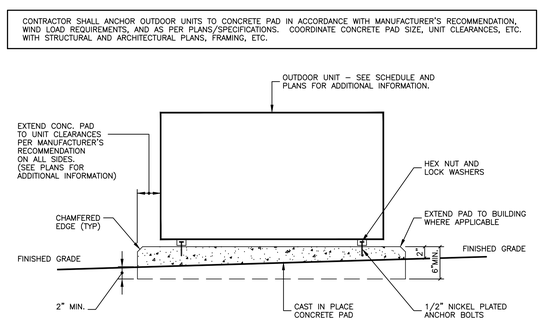

TYPICAL OUTDOOR UNIT SUPPORT PAD

NOT TO SCALE

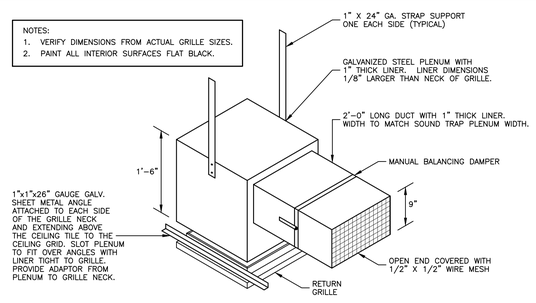

CEILING RETURN GRILLE AND SOUND TRAP DETAIL

NOT TO SCALE

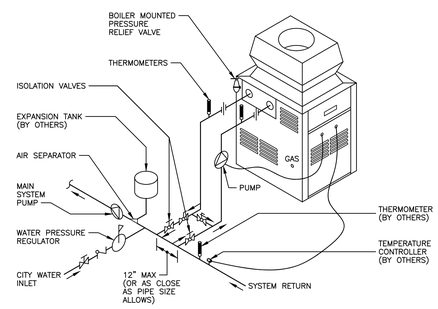

GAS BOILER PLUMBING DETAIL

NOT TO SCALE

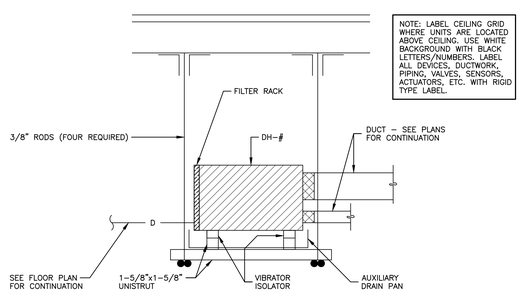

TYPICAL SECTION AT ABOVE CEILING DEHUMIDIFIER

NOT TO SCALE

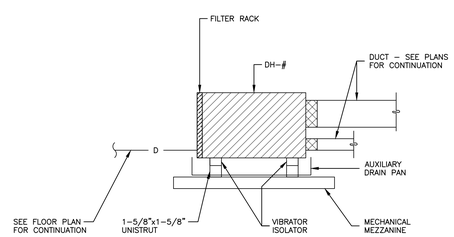

TYPICAL SECTION AT ABOVE CEILING DEHUMIDIFIER (MEZZANINE)

NOT TO SCALE

HVAC DETAILS

WHORTON ENGINEERING, INC.
HVAC – PLUMBING – PROCESS CONTROL
RANDALL WHORTON, P.E.
PHONE: (256) 820-9897
25 SUMMERALL GATE ROAD
ANNISTON, ALABAMA 36205

WHORTON ENGINEERING PROJECT NO. 24135

S|S&L
ARCHITECTURE & INTERIOR DESIGN
1115 Second Avenue North, Birmingham, AL 35203-3704
Tel. 334.263.5102 | WWW.SSLARCH.COM

Rev.	Description	Date

Job Number: 12072
Date: JUNE 2024
Drawn By: JH
Checked By: RDW
Project Title

New Security Building
117th Air Refueling Wing
Birmingham, AL

Sheet Title: HVAC DETAILS

Sheet Number: M2.1

STATE OF ALABAMA LICENSED RANDALL DEWAYNE WHORTON No.14192 PROFESSIONAL ENGINEER
06-20-2024

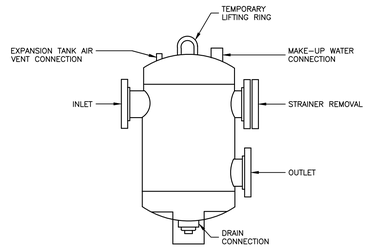

TYPICAL AIR / DIRT SEPARATOR DETAIL

NOT TO SCALE

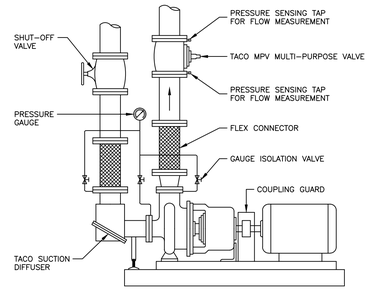

TYPICAL WATER PUMP INSTALLATION

NOT TO SCALE

NOTE: PRECHARGE TANK TO MINIMUM SYSTEM PRESSURE AT TANK LOCATION

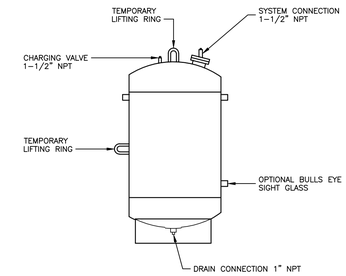

TYPICAL EXPANSION TANK DETAIL

NOT TO SCALE

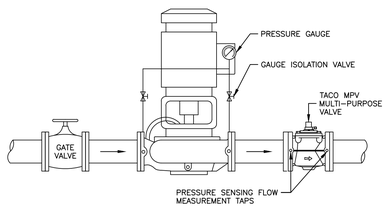

TYPICAL VERTICAL INLINE WATER PUMP INSTALLATION

NOT TO SCALE

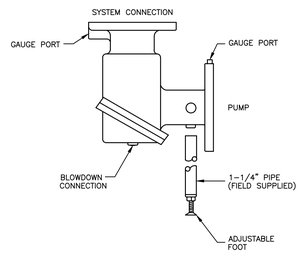

TYPICAL PUMP SUCTION DIFFUSER

NOT TO SCALE

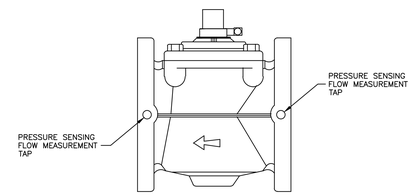

TYPICAL MULTI-PURPOSE VALVE DETAIL

NOT TO SCALE

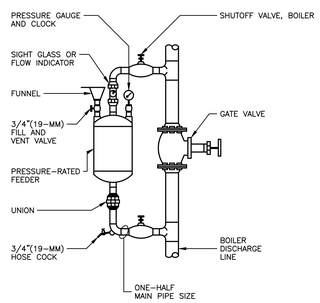

TYPICAL ONE-SHOT CHEMICAL FEEDER

NOT TO SCALE

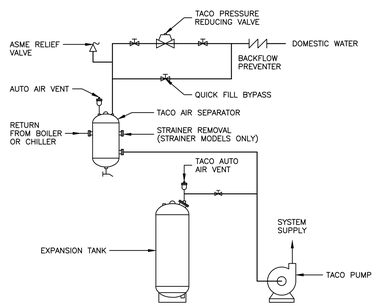

TYPICAL AIR CONTROL SYSTEM WITH BLADDER EXPANSION TANK PIPING

NOT TO SCALE

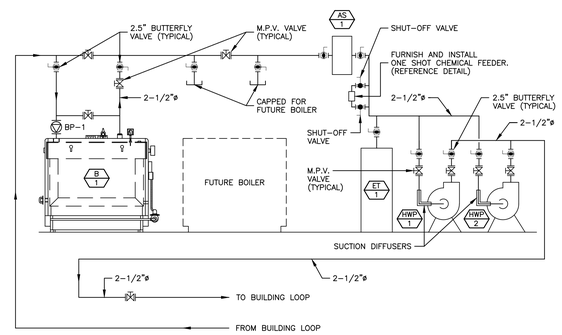

BOILER WATER PLUMBING DETAIL

NOT TO SCALE

NOTE: SIMILAR CLAMP IS TO BE USED FOR SUPPORT OF VERTICAL CARRIER PIPE AT FLOORS.

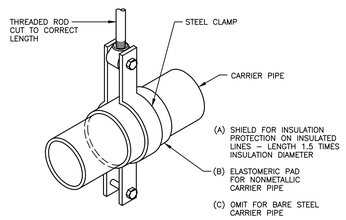

CLAMP TYPE PIPE HANGER DETAIL

NOT TO SCALE

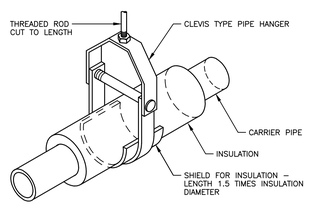

TYPICAL CLEVIS TYPE PIPE HANGER FOR INSULATED PIPE DETAIL

NOT TO SCALE

HVAC DETAILS

WHORTON ENGINEERING, INC.

HVAC – PLUMBING – PROCESS CONTROL

RANDALL WHORTON, P.E.
PHONE: (256) 820-9897

25 SUMMERALL GATE ROAD
ANNISTON, ALABAMA 36205

WHORTON ENGINEERING PROJECT NO. 24135

S|S&L
ARCHITECTURE & INTERIOR DESIGN
1115 Second Avenue North, Birmingham, AL 35203
Tel. 334.263.5102 | WWW.SSLARCH.COM

Rev.	Description	Date

Job Number: 12072

Date: JUNE 2024

Drawn By: JH

Checked By: RDW

Project Title

New Security Building

117th Air Refueling Wing
Birmingham, AL

Sheet Title: HVAC DETAILS

Sheet Number: M2.2

STATE OF ALABAMA
RANDALL DOUGLAS WHORTON
No.14192
PROFESSIONAL ENGINEER
06-20-2024

VERTICAL PIPE SUPPORT NOTES
1 SIZE CLAMP TO ADEQUATELY SUPPORT LOAD.
2 FOR COPPER TUBING USE COPPER PLATED OR PAINTED OR PLASTIC COATED CLAMPS.

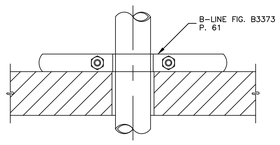

TYPICAL VERTICAL PIPE SUPPORTS

NOT TO SCALE

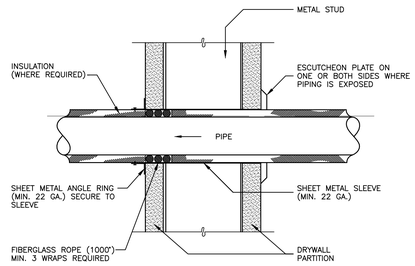

PIPE SLEEVE THROUGH WALL DETAIL

NOT TO SCALE

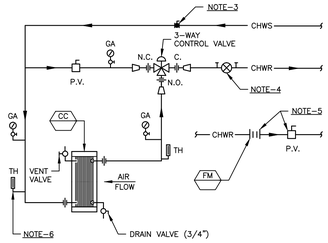

NOTES
1 INSTALL FLOW METER ACCORDING TO MANUFACTURE REQUIREMENTS.
2 INSTALL PIPING COUNTER FLOW TO AIR FLOW.
3 CHILLED WATER SUPPLY. BALL VALVE – UP TO 2-1/2". BUTTERFLY VALVE – 3" AND UP.
4 CHILLED WATER RETURN. CIRCUIT SETTER BALANCING VALVE WITH POSITIVE SHUT-OFF UP TO 2-1/2".
5 FLOW METER WITH PLUG VALVE – 3" TO 6". FLOW METER WITH BUTTERFLY VALVE – 8" AND UP.
6 THERMOMETERS TO BE INSTALLED IN ELBOWS ON PIPE 3" AND SMALLER.
7 GAUGE RANGE TO BE TWO TIMES NORMAL OPERATING PRESSURE.
8 THERMOMETER RANGE TO BE TWO TIMES NORMAL OPERATING PRESSURE.

PIPING ARRANGEMENT - CHILLED WATER COIL - AHU MTD.

NOT TO SCALE

(3-WAY AUTOMATIC CONTROL VALVE – N.O. TO COIL)

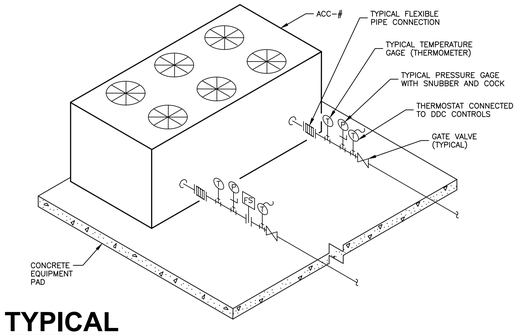

TYPICAL AIR COOLED CHILLER CONNECTION

NOT TO SCALE

1 MECHANICAL CONTRACTOR TO SUPPLY AND INSTALL ELECTRIC HEAT TRACING ON ALL EXTERIOR PLUMBING. THIS SHALL INCLUDE CHILLER, PIPE, PUMPS, ETC.	4 BYPASS VALVE AND BYPASS PIPING SHALL BE INSTALLED INSIDE BUILDING.
2 ALL OUTDOOR PIPING INSULATION SHALL INCLUDE 0.02" THICK SMOOTH SURFACE ALUMINUM JACKET.	5 CONTRACTOR SHALL FURNISH AND INSTALL STRUCTURAL STEEL SUPPORT BASE AS RECOMMENDED BY THE EQUIPMENT MANUFACTURER.
3 PROVIDE DDC ACTUATORS ON VALVES.	

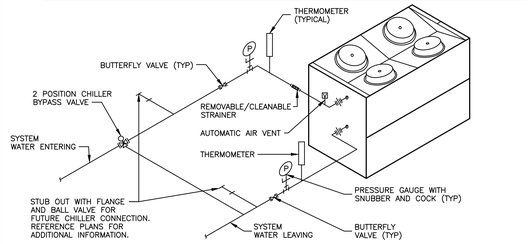

TYP. AIR COOLED CHILLER PIPING DETAIL

NOT TO SCALE

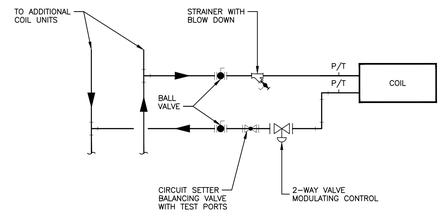

TYPICAL CHILLED WATER / HOT WATER COIL PIPING DETAIL (2-WAY VALVE)

NOT TO SCALE

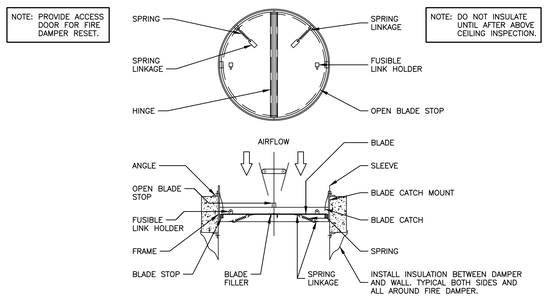

TYPICAL SMALL ROUND FIRE DAMPER INSTALLATION DETAIL

NOT TO SCALE

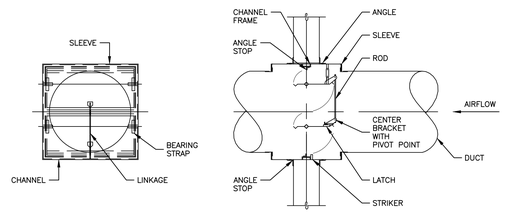

CLOSED POSITION **OPEN POSITION**

TYPICAL LARGE ROUND FIRE DAMPER INSTALLATION DETAIL

NOT TO SCALE

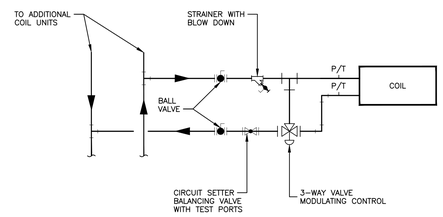

TYPICAL CHILLED WATER / HOT WATER COIL PIPING DETAIL (3-WAY VALVE)

NOT TO SCALE

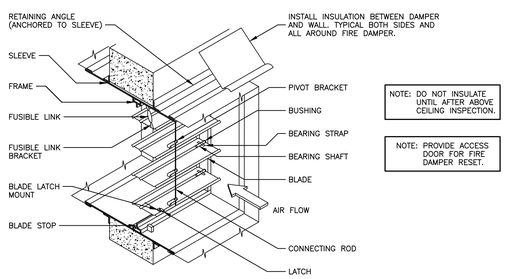

TYPICAL RECTANGULAR FIRE DAMPER INSTALLATION DETAIL

NOT TO SCALE

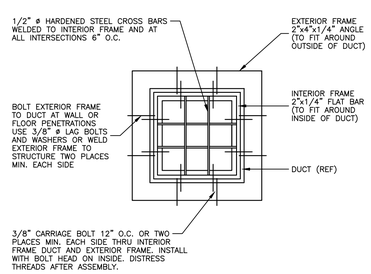

SECURITY BAR DUCT OPENING DETAIL

NOT TO SCALE

HVAC DETAILS

WHORTON ENGINEERING, INC.

HVAC – PLUMBING – PROCESS CONTROL

RANDALL WHORTON, P.E.
PHONE: (256) 820-9897

25 SUMMERALL GATE ROAD
ANNISTON, ALABAMA 36205

WHORTON ENGINEERING PROJECT NO. 24135

S|S&L
ARCHITECTURE & INTERIOR DESIGN
1145 Shades Creek Parkway, Birmingham, AL 35209
Tel. 334.263.5102 | WWW.SSLARCH.COM

Rev.	Description	Date

Job Number: 12072

Date: JUNE 2024

Drawn By: JH

Checked By: RDW

Project Title

New Security Building
117th Air Refueling Wing
Birmingham, AL

Sheet Title: HVAC DETAILS

Sheet Number: M2.3

ALABAMA RANDALL WHORTON No.14192 PROFESSIONAL ENGINEER

06-20-2024

DDC SYSTEM NOTES

1. INTERFACE ALL EQUIPMENT INTO THE BUILDING AUTOMATION SYSTEM. GRAPHICS, FLOOR PLANS, EQUIPMENT GRAPHICS, ETC. SHALL BE PROVIDED IN THE BUILDING AUTOMATION SYSTEM TO COORDINATE WITH PLANS.
2. ALL UNITS SHALL BE PROGRAMMED FOR OCCUPIED MODE, OCCUPIED STANDBY, AND UNOCCUPIED MODE. LIGHTING OCCUPANCY SENSORS SHALL BE TIED INTO BUILDING AUTOMATION SYSTEM TO PLACE UNITS IN OCCUPIED MODE, OCCUPIED STANDBY MODE, OR UNOCCUPIED MODE.
3. ALL UNITS SHALL BE COMPLETELY INTERFACED TO THE BUILDING AUTOMATION SYSTEM. BUILDING AUTOMATION SYSTEM SHALL BE CAPABLE OF ADJUSTING SETPOINTS, PROGRAMMING OCCUPIED/UNOCCUPIED CONDITIONS FOR HOLIDAYS, WEEKDAYS, WEEKENDS, ETC. THE BUILDING AUTOMATION SYSTEM SHALL BE CAPABLE OF LIMITING ROOM OVERRIDES TO +/– 4 DEGREES (ADJUSTABLE).
4. INTERFACE ALL LIGHTING CIRCUITS OR OCCUPANCY SENSORS IN ANY GIVEN ZONE TO THE DDC CONTROLS FOR THE HVAC UNIT SERVING THAT ZONE. THE HVAC UNIT CONTROLS SHALL PROVIDE A STATUS POINT INDICATING THE STATE OF THE ZONE OCCUPANCY. FOR ALL ZONES, THE OCCUPANCY SENSOR SHALL PLACE THE HVAC UNIT IN STANDBY MODE WHEN THE ZONE IS UNOCCUPIED. OCCUPIED AND UNOCCUPIED MODES ARE CONTROLLED BY THE BUILDING SCHEDULE.
5. BUILDING AUTOMATION CONTRACTOR SHALL INSTALL WATER SUB–METER, GAS SUB–METER, AND POWER SUB–METER FOR INTERFACE WITH THE BUILDING AUTOMATION SYSTEM TO OBTAIN TOTAL ENERGY ON THE BUILDING. WATER AND GAS SUB–METER PULSE OUTPUTS SHALL BE CONNECTED TO POWER METER PULSE INPUTS.
6. POWER SUB–METER INSTALLATION SHALL BE INSTALLED BETWEEN POWER METER AND BLDG. ENTRANCE AT BUILDING EXTERIOR. SUB–METER MUST BE LABELED "CUSTOMER OWNED". COORDINATE INSTALLATION WITH LOCAL UTILITY OFFICE. FIELD VERIFY EXACT LOCATION. REFERENCE PLUMBING PLANS FOR ADDITIONAL INFORMATION.
7. GAS PRESSURE TO THE BUILDING SHALL BE MEASURED BY LOCAL UTILITY. COORDINATE SUB–METER INSTALLATION WITH LOCAL OFFICE. REFERENCE PLUMBING PLANS FOR METER LOCATION.
8. INSTALL WATER SUB–METER AT WATER METER. FIELD VERIFY EXACT LOCATION. REFERENCE PLUMBING/CIVIL PLANS FOR ADDITIONAL INFORMATION.
9. INSTALLATION OF GAS AND WATER SUB–METERS SHALL INCLUDE METER BYPASS. BYPASS PIPING SHALL BE FULL SIZE OF PIPE MAIN AND SHALL INCLUDE ISOLATION VALVES.
10. ALL NEW FRESH AIR MOTORIZED DAMPERS SHALL BE CONTROLLED BY THE BUILDING AUTOMATION SYSTEM WITH OCCUPANCY SCHEDULE.
11. ALL CONTROLS COMPONENTS INCLUDING SENSORS, DAMPERS, ETC. SHALL BE LABELED TO MATCH CONTROL DRAWINGS.
12. ALL I.P. ADDRESSES SHALL BE LABELED.
13. ALL CONTROL PANELS SHALL BE LABELED.
14. LAMINATED CONTROL DRAWINGS SHALL BE INSTALLED AT CONTROL JACE PANELS.
15. ALL JACE CONTROL PANELS SHALL INCLUDE BATTERY BACKUP UPS.
16. COORDINATE DDC CONTROLLER TERMINAL ASSIGNMENTS WITH AANG DDC STANDARDS AND PRACTICES.
17. DDC CONTROLS AS–BUILT DRAWINGS SHALL INCLUDE COLOR CODES FOR ALL MULTI–CONDUCTOR CABLES.
18. CARBON MONOXIDE DETECTORS SHALL BE MACURCO MODEL CM–6 (OR APPROVED EQUAL).
19. BUILDING AUTOMATION CONTRACTOR SHALL INSTALL GENERATOR GAS SUB–METER FOR INTERFACE WITH THE BUILDING AUTOMATION SYSTEM TO OBTAIN TOTAL ENERGY ON THE BUILDING.
20. INSTALLATION OF GENERATOR GAS SUB–METER SHALL INCLUDE METER BYPASS. BYPASS PIPING SHALL BE FULL SIZE OF PIPE MAIN AND SHALL INCLUDE ISOLATION VALVES.
21. ALL CONTROL DEVICES SHOWN ON THE CONTROL DIAGRAMS SHALL BE FURNISHED BY THE FMS CONTRACTOR UNLESS OTHERWISE NOTED OR SPECIFIED.
22. ALL COMPONENTS REQUIRED FOR THE SEQUENCES OF OPERATION, SHOWN AND/OR DESCRIBED ON THE CONTROL DIAGRAMS AND/OR SPECIFICATIONS, OR AS REQUIRED FOR A PROPERLY OPERATING SYSTEM SHALL BE FURNISHED AND INSTALLED BY THE FMS CONTRACTOR UNLESS OTHERWISE NOTED.
23. FMS CONTRACTOR IS RESPONSIBLE TO FURNISH, INSTALL, AND WIRE ALL COMPONENTS REQUIRED FOR INTEGRATION OF INFORMATION SHOWN TO BE ACCESSED BY THE FMS FROM OTHER SYSTEMS AND EQUIPMENT UNLESS OTHERWISE BE NOTED OR SPECIFIED.
24. ALL POWER WIRING AND TRANSFORMERS FOR SENSORS, ACTUATORS, AND OTHER CONTROL COMPONENTS AS REQUIRED FOR THE FMS AND/OR DDC SYSTEMS TO FUNCTION PROPERLY, SHALL BE FURNISHED AND INSTALLED BY THE FMS CONTRACTOR UNLESS OTHERWISE SHOWN, NOTED, OR SPECIFIED.
25. ALL POWER WIRING FOR SENSORS, ACTUATORS, AND OTHER DEVICES SHALL BE FROM THE DDC PANEL OR THE FMS/BAS PANEL OF THE ASSOCIATED SYSTEM.
26. ALL CONTROL, INTERLOCK, AND POWER WIRING SHALL BE INSTALLED PER THE ELECTRICAL SPECIFICATION, LOCAL, STATE, AND NATIONAL CODES. RACEWAY SHALL BE INSTALLED PER THE ELECTRICAL SPECIFICATIONS.
27. ALL CONTROL POINTS SHOWN ON THE CONTROL DIAGRAMS SHALL BE PROVIDED AND INTEGRATED INTO A FMS/BAS SYSTEM GRAPHIC REPRESENTATIVE OF THE CONTROL DIAGRAMS.
28. ALL CONTROL BANDS, SETPOINTS, SETPOINT LIMITS, SETPOINT INCREMENT VALUES, SETPOINT DECREMENT VALUES, ALARM LIMITS, AND OTHER PARAMETERS SHALL BE ADJUSTABLE FROM THE FMS/BAS.
29. ALL SETPOINTS SHALL BE ADJUSTABLE FROM THE FMS/BAS SYSTEM GRAPHIC(S).
30. SPACE SETPOINTS SHALL BE ADJUSTABLE FROM THE ROOM SENSOR UNLESS OTHERWISE SHOWN ON DRAWINGS OR SPECIFIED.
31. THE FMS/BAS SYSTEM GRAPHICS SHALL BE LINKED WITH ASSOCIATED BUILDING FLOOR PLANS FROM THE SPACE SENSOR OR AREA SERVED.
32. WHERE ONE SYSTEM IS ASSOCIATED WITH ANOTHER SYSTEM, THE SYSTEM GRAPHIC SHALL BE LINKED TO THE ASSOCIATED GRAPHIC AS WELL AS THE BUILDING FLOOR PLAN GRAPHIC. EXAMPLE – A WATER SOURCE/GEOTHERMAL HEAT PUMP UNIT SYSTEM GRAPHIC SHALL BE LINKED TO THE LOOP WATER SYSTEM GRAPHIC IN ADDITION TO BOTH BEING LINKED TO THE BUILDING FLOOR PLAN.
33. THE BUILDING FLOOR PLAN SHALL DISPLAY THE SPACE TEMPERATURE AT EACH SPACE SENSOR LOCATION WITH AREA SERVED DISPLAYED IN SEPARATE COLORS BASED ON THE CONDITION OF THE ZONE. EXAMPLE – ALARM, NORMAL, HIGH OR LOW TEMPERATURE, HIGH OR LOW HUMIDITY, ETC.
34. ALL BUILDING FLOOR PLANS AND SYSTEM GRAPHICS SHALL DISPLAY OUTSIDE AIR TEMPERATURE AND HUMIDITY.
35. THE FLOOR PLAN GRAPHICS SHALL BE LINKED TO A BUILDING GRAPHIC WITH A DIGITAL PHOTOGRAPH BACKGROUND OF THE ACTUAL BUILDING. DURING CONSTRUCTION A TEMPORARY GRAPHICS MAY BE USED THAT IS REPRESENTATIVE OF THE BUILDING.
36. ALL GRAPHICS SHALL BE SUBMITTED IN COLOR WITH THE FMS/BAS SUBMITTAL.

BUILDING AUTOMATION SYSTEM INTER-TRADE RESPONSIBILITY MATRIX

FMS = FACILITY MANAGEMENT SYSTEM/BUILDING AUTOMATION SYSTEM CONTRACTOR
23 = DIVISION 23 CONTRACTOR (PLUMBING OR HVAC)
26 = DIVISION 26 CONTRACTOR (ELECTRICAL OR FIRE ALARM CONTRACTOR)

	WORK	FURNISH	INSTALL	LOW VOLTAGE WIRE AND CONDUIT	LINE POWER AND CONDUIT
1	DUCT SMOKE DETECTORS (SHOWN ON PLANS)	26	23	FMS	26
2	AUTOMATION DAMPERS	FMS	23	FMS	FMS
3	MANUAL VALVES, DAMPERS	23	23		
4	AUTOMATIC VALVES	FMS	23	FMS	FMS
5	PIPE INSERTION DEVICES AND TAPS INCLUDING THERMOWELLS FLOW AND PRESSURE STATIONS, ETC REQUIRING DDC INTERFACE.	FMS	23	FMS	FMS
6	PIPE INSERTION DEVICES AND TAPS INCLUDING THERMOWELLS FLOW AND PRESSURE STATIONS, ETC. NOT REQUIRING DDC INTERFACE.	23	23		
7	PUMP FLOW SWITCHES	23	23	FMS	
8	VAV UNIT CONTROLLER	FMS	FMS	FMS	26
9	THERMOSTATS AND HUMIDISTATS	FMS	FMS	FMS	
10	WATER TREATMENT SYSTEM	23	23	23	26
11	VARIABLE FREQUENCY DRIVES	FMS	23	FMS	26
12	FMS LOW VOLTAGE AND COMMUNICATION WIRING	FMS	FMS	FMS	
13	FMS CONDUITS AND RACEWAY	FMS	FMS	FMS	
14	CONTROL RELAYS	FMS	FMS	FMS	
15	FMS NETWORK ROUTERS, BRIDGES, HUBS AND ASSOCIATED CABLING	FMS	FMS	FMS	
16	FMS NODES, EQUIPMENT, HOUSINGS, ENCLOSURES AND PANELS AND POWER FROM DIV. 16 PANELS	FMS	FMS	FMS	FMS
17	THERMOSTAT/HUMIDISTAT/CO2 DETECTOR FOR CONTROL OF FRESH AIR MOTORIZED DAMPERS	FMS	23	FMS	FMS
18	FMS SOFTWARE, FIRMWARE AND PROJECT SPECIFIC SOFTWARE CONFIGURATIONS AND DATABASE ENTRIES	FMS	FMS	FMS	
19	ERV UNIT CONTROLLERS	FMS	FMS	FMS	26
20	MOTORIZED DAMPERS	FMS	23	FMS	FMS
21	SPLIT SYSTEM CONTROLLERS, DEHUMIDIFIER CONTROLLERS	FMS	FMS	FMS	26
22	AIR HANDLING UNIT CONTROLLERS	FMS	FMS	FMS	26
23	GAS SUB–METERS	FMS	FMS	FMS	
24	POWER SUB–METERS	FMS	FMS	FMS	
25	DOMESTIC WATER HEATER/PUMP CONTROLS	FMS	FMS	FMS	26
26	OCCUPANCY SENSORS	FMS	FMS	FMS	FMS
27	CARBON MONOXIDE DETECTOR/ALARM	FMS	FMS	FMS	

1. SMOKE DETECTORS MUST BE COORDINATED WITH THE FIRE ALARM CONTRACTOR.
2. THE ABOVE MATRIX IS FURNISHED BY THE ENGINEER OF RECORD AS A GUIDE FOR THE CONTRACTOR'S USE. THE CONTRACTOR SHALL SUBMIT A RESPONSIBILITY MATRIX BASED UPON THE CONTRACTOR'S PROJECT COORDINATION AND BID PREPARATION. THE CONTRACTOR SHALL PREPARE AND SUBMIT A FINAL MATRIX OF THE COORDINATED RESPONSIBILITIES OF THE REQUIRED TRADES WITH PROJECT SUBMITTALS AND SUB–CONTRACTORS IDENTIFIED BY NAME, ADDRESS, ETC.

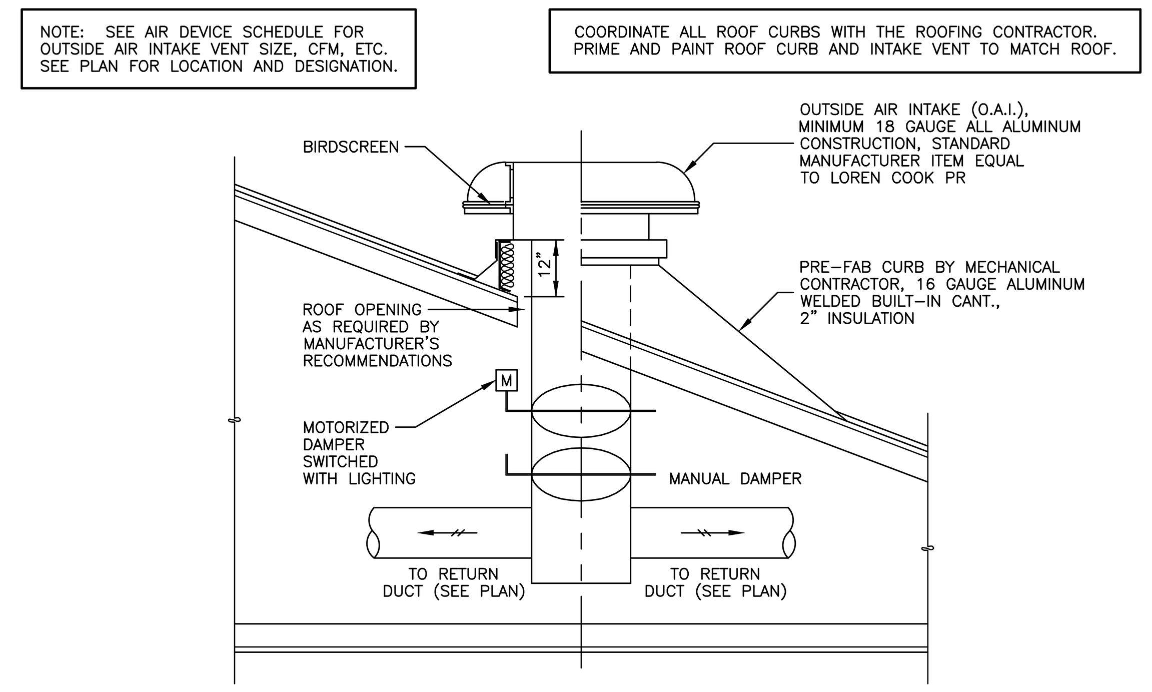

TYPICAL INTAKE VENT DETAIL

NOT TO SCALE

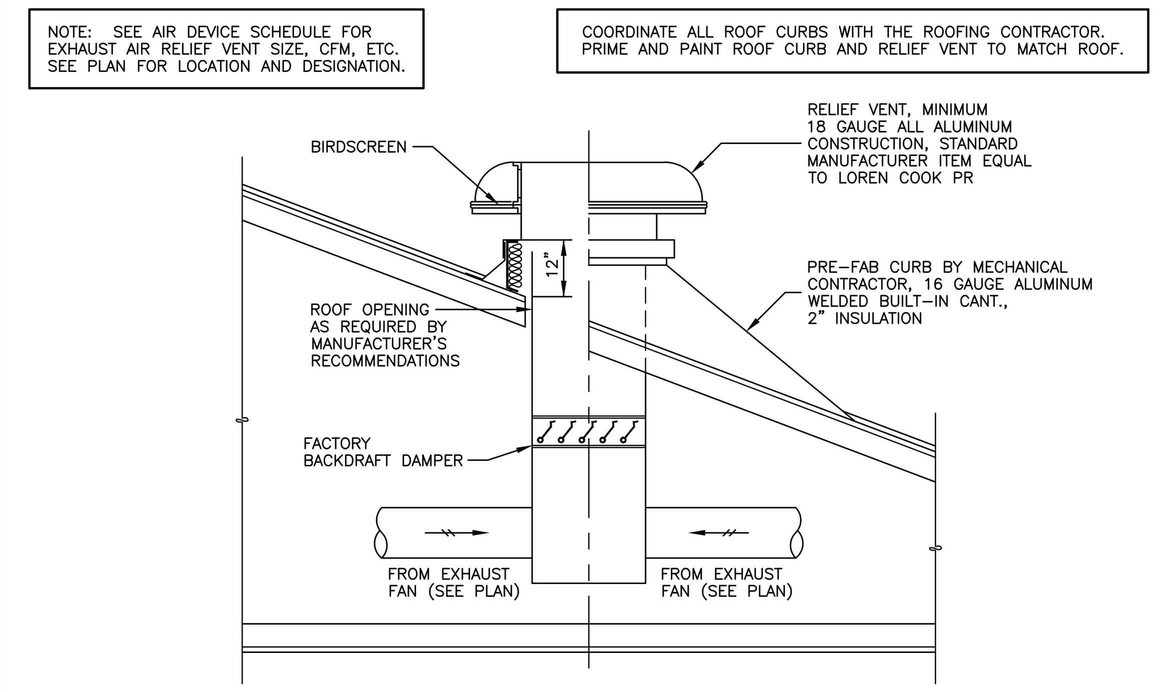

TYPICAL RELIEF VENT DETAIL

NOT TO SCALE

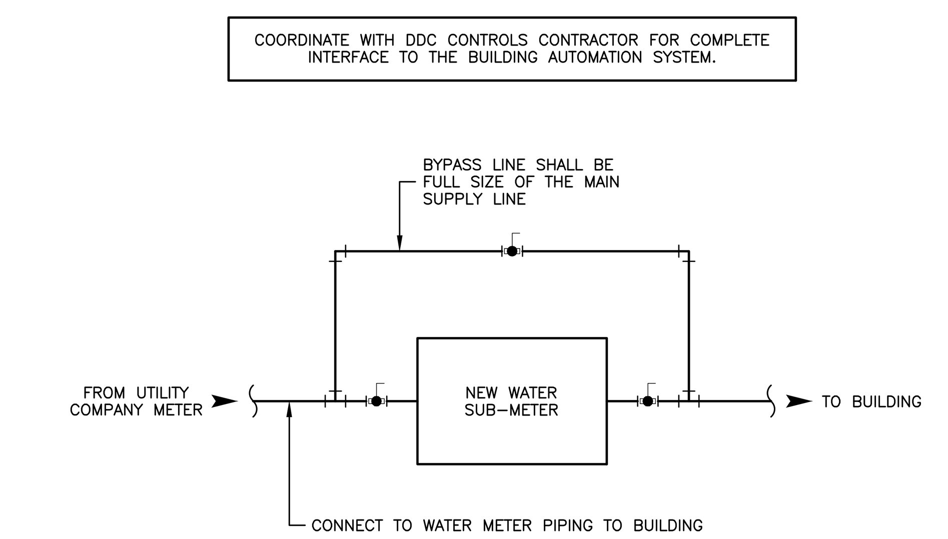

TYPICAL NEW WATER SUB-METER PIPING DIAGRAM

NOT TO SCALE

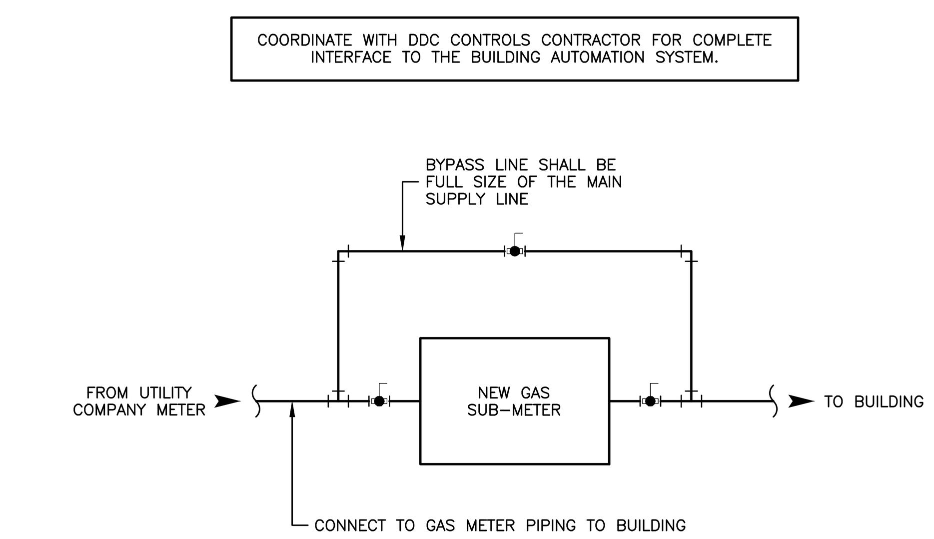

TYPICAL NEW GAS SUB-METER PIPING DIAGRAM

NOT TO SCALE

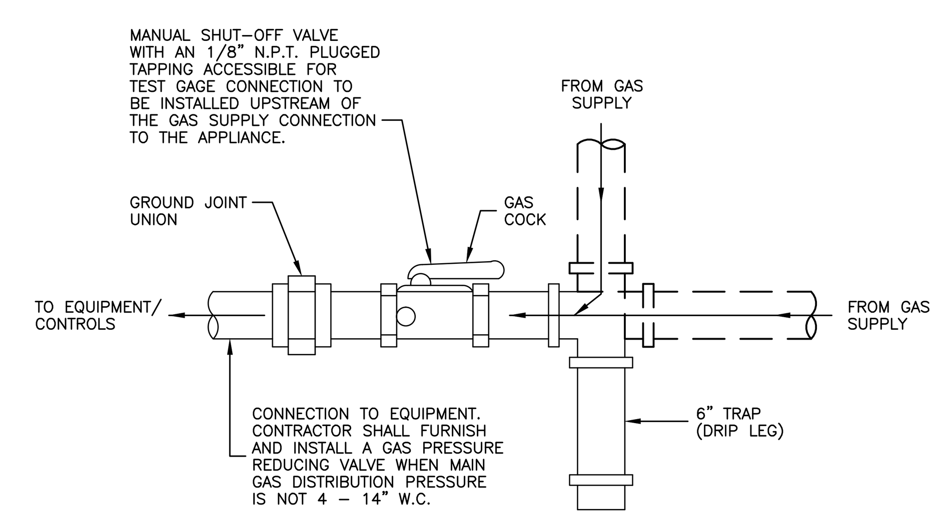

TYPICAL GAS CONNECTION TO EQUIPMENT DETAIL

NOT TO SCALE

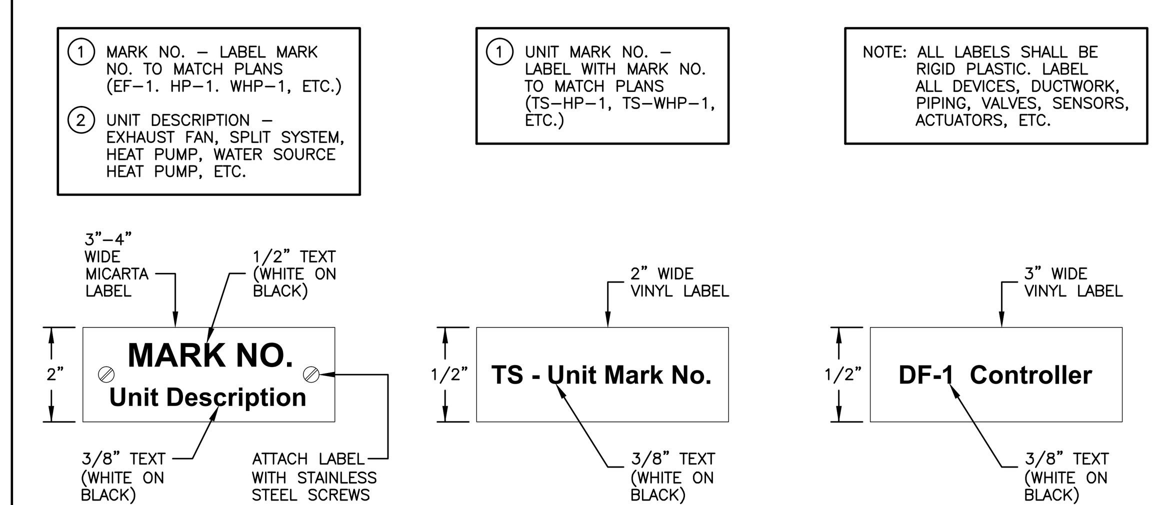

TYPICAL HVAC EQUIPMENT LABEL DETAIL

TYPICAL TEMP. SENSOR / THERMOSTAT LABEL DETAIL

TYPICAL FAN CONTROLLER LABEL DETAIL

HVAC EQUIPMENT LABELING DETAILS

NOT TO SCALE

OUTDOOR AIR DELIVERY & CARBON DIOXIDE MONITORING

1. EACH ERV (1 TOTAL) SHALL INCLUDE OUTDOOR AIR MONITORS. ALL MONITORING DEVICES SHALL BE CAPABLE OF MEASURING WITH AN ACCURACY OF PLUS/MINUS 15%.
2. OUTDOOR AIRFLOW MONITORING EQUIPMENT SHALL BE PROGRAMMED TO GENERATE AN ALARM THROUGH THE BUILDING AUTOMATION SYSTEM TO THE BUILDING OPERATOR WHEN AIRFLOW VARIES BY 10% OR MORE FROM THE DESIGN VALUE.
3. CARBON DIOXIDE SENSORS SHALL BE INSTALLED IN THE FOLLOWING SPACES: GUARDMOUNT AND CONFERENCE.
4. CARBON DIOXIDE SENSORS SHALL BE LOCATED ADJACENT TO SPACE THERMOSTAT AT 48" A.F.F.
5. CARBON DIOXIDE SENSORS SHALL BE PROGRAMMED TO GENERATE AN ALARM THROUGH THE BUILDING AUTOMATION SYSTEM TO THE SYSTEM OPERATOR WHEN THE CONDITIONS VARY BY 10% OR MORE FROM THE DESIGN VALUE (1500 PPM).

HVAC DETAILS

WHORTON ENGINEERING, INC.
HVAC – PLUMBING – PROCESS CONTROL
RANDALL WHORTON, P.E.
PHONE: (256) 820-9897
25 SUMMERALL GATE ROAD
ANNISTON, ALABAMA 36205
WHORTON ENGINEERING PROJECT NO. 24135

SS&L
ARCHITECTURE & INTERIOR DESIGN
1115 South Court Street | Montgomery, AL 36104
Tel. 334. 263. 5162 | WWW.SSLARCH.COM

Rev.	Description	Date

Job Number: 12072
Date: JUNE 2024
Drawn By: JH
Checked By: RDW

Project Title: New Security Building
117th Air Refueling Wing
Birmingham, AL.

Sheet Title: HVAC DETAILS

Sheet Number: M2.4

No.14192 PROFESSIONAL ENGINEER RANDALL D. WHORTON
06-20-2024

THIS POWER MONITORING INTERFACE SCHEMATIC MAY NOT REFLECT THE ACTUAL SENSORS AND POINTS AS SUPPLIED BY THE POWER MONITORING MANUFACTURER.

ALL INTERFACE POINTS SHALL BE COORDINATED WITH THE POWER MONITORING SUPPLIER.

REFERENCE SPECIFICATIONS FOR CONTROL POINTS AND SEQUENCE OF OPERATIONS.

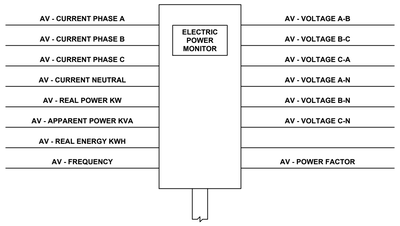

POWER MONITORING INTERFACE CONTROL DETAIL

NOT TO SCALE

REFERENCE SPECIFICATIONS FOR CONTROL POINTS AND SEQUENCE OF OPERATIONS.

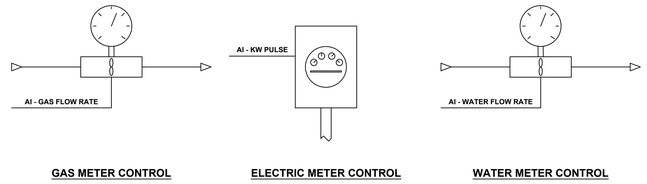

TYPICAL GAS / ELECTRIC / WATER METERING CONTROL DETAILS

NOT TO SCALE

THIS BOILER INTERFACE SCHEMATIC MAY NOT REFLECT THE ACTUAL SENSORS AND POINTS AS SUPPLIED BY THE BOILER MANUFACTURER.

ALL INTERFACE POINTS SHALL BE COORDINATED WITH THE BOILER SUPPLIER.

REFERENCE SPECIFICATIONS FOR CONTROL POINTS AND SEQUENCE OF OPERATIONS.

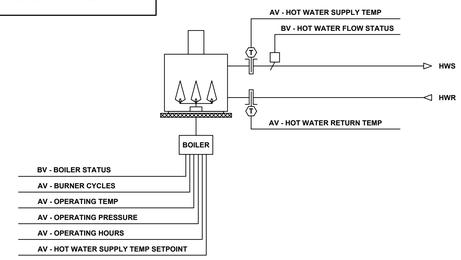

TYPICAL BOILER INTERFACE CONTROL DETAIL

NOT TO SCALE

THIS VARIABLE FREQUENCY DRIVE (VFD) INTERFACE SCHEMATIC MAY NOT REFLECT THE ACTUAL SENSORS AND POINTS AS SUPPLIED BY THE VFD MANUFACTURER.

ALL INTERFACE POINTS SHALL BE COORDINATED WITH THE VFD SUPPLIER.

REFERENCE SPECIFICATIONS FOR CONTROL POINTS AND SEQUENCE OF OPERATIONS.

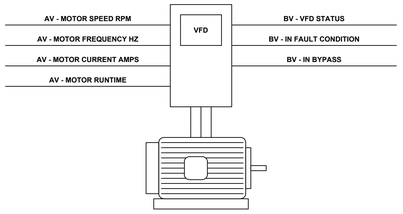

VARIABLE FREQUENCY DRIVE INTERFACE CONTROL DETAIL

NOT TO SCALE

REFERENCE SPECIFICATIONS FOR CONTROL POINTS AND SEQUENCE OF OPERATIONS.

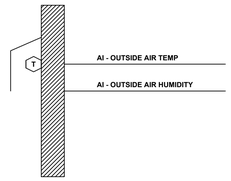

TYPICAL OUTSIDE AIR CONDITIONS CONTROL DETAIL

NOT TO SCALE

REFERENCE SPECIFICATIONS FOR CONTROL POINTS AND SEQUENCE OF OPERATIONS.

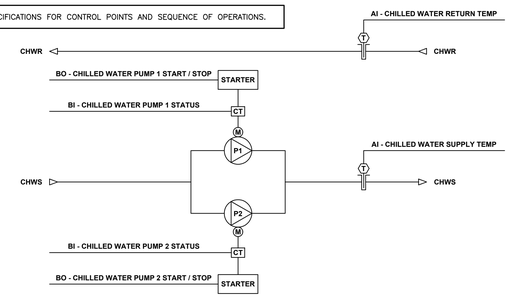

TYPICAL CHILLED WATER LOOP PUMPS CONTROL DETAIL

NOT TO SCALE

REFERENCE SPECIFICATIONS FOR CONTROL POINTS AND SEQUENCE OF OPERATIONS.

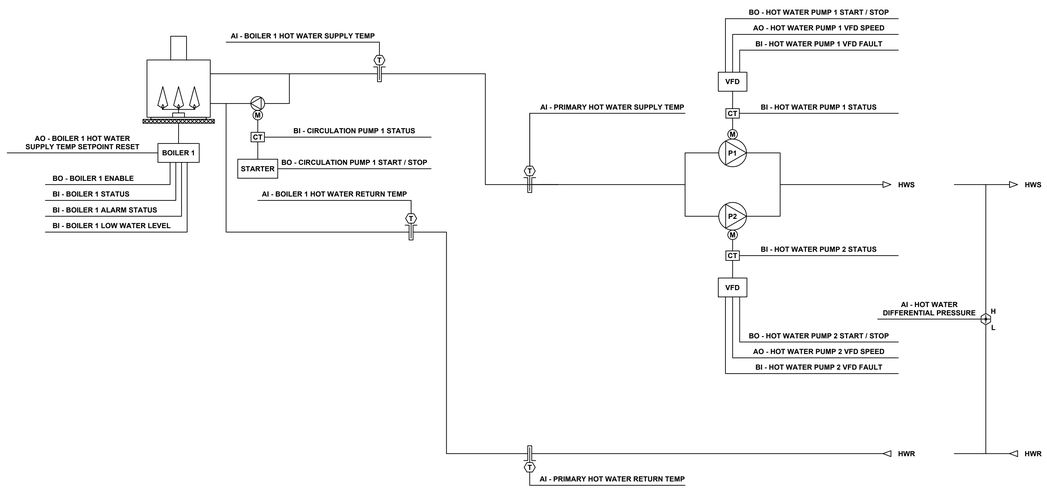

TYPICAL BOILER SYSTEM CONTROL DETAIL

NOT TO SCALE

REFERENCE SPECIFICATIONS FOR CONTROL POINTS AND SEQUENCE OF OPERATIONS.

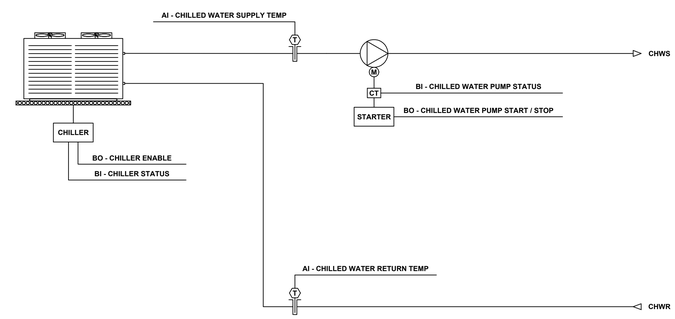

TYPICAL SINGLE AIR COOLED CHILLER CONTROL DETAIL

NOT TO SCALE

HVAC DETAILS

WHORTON ENGINEERING, INC.

HVAC – PLUMBING – PROCESS CONTROL

RANDALL WHORTON, P.E.
PHONE: (256) 820-9897

25 SUMMERALL GATE ROAD
ANNISTON, ALABAMA 36205

WHORTON ENGINEERING PROJECT NO. 24135

S|S&L
ARCHITECTURE & INTERIOR DESIGN
1145 Shades Crest Road, Birmingham, AL 35226
Tel. 334.263.5162 | WWW.SSLARCH.COM

Rev.	Description	Date

Job Number: 12072

Date: JUNE 2024

Drawn By: JH

Checked By: RDW

Project Title

New Security Building

117th Air Refueling Wing
Birmingham, AL

Sheet Title: HVAC DETAILS

Sheet Number: M2.5

06-20-2024

REFERENCE SPECIFICATIONS FOR CONTROL POINTS AND SEQUENCE OF OPERATIONS.

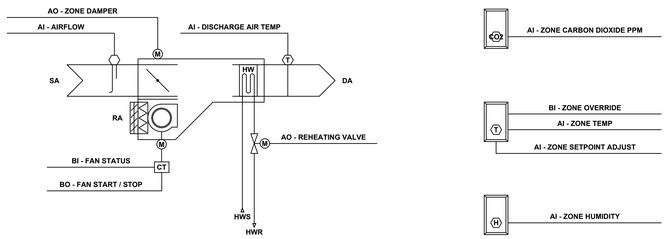

TYPICAL VARIABLE AIR VOLUME TERMINAL UNIT CONTROL DETAIL

NOT TO SCALE

REFERENCE SPECIFICATIONS FOR CONTROL POINTS AND SEQUENCE OF OPERATIONS.

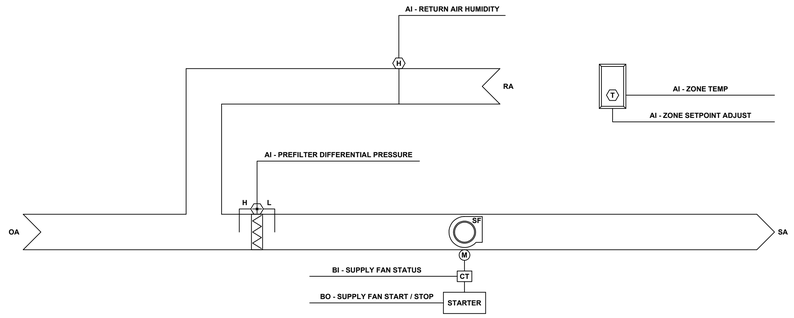

TYPICAL DEHUMIDIFIER CONTROL DETAIL

NOT TO SCALE

NEW SECURITY BUILDING
117TH AIR REFUELING WING - BIRMINGHAM, AL
MINIMUM AND CORRECTED OSA REQUIREMENTS FOR AHU-1 PER ASHRAE STANDARD 62.1 AND IMC 2021

UNIT	ZONE	ROOM NAME	OCCUPANCY CATEGORY	AREA (AZ)	PEOPLE (QTY)	OUTDOOR AIR CALCULATIONS					EZ	VOZ CFM (VOZ=VOU/EZ)	SUPPLY AIR CFM (VPZ)
						CFM/PERSON	PEOPLE OSA CFM (RP)	AREA (CFM/SF)	AREA OSA CFM (RA)	TOTAL (VOU)			
AHU-1	VAV-1-1	GUARDMOUNT	OFFICE SPACE	1,119	56	5	280	0.06	67.14	347	1.0	347	1,000
AHU-1	VAV-1-2	WEAPONS ISSUE AND STORAGE	OFFICE SPACE	687	2	5	10	0.06	41.22	51	1.0	51	350
AHU-1	VAV-1-3	NOT USED											
AHU-1	VAV-1-4	CATS TRAINING	OFFICE SPACE	621	4	5	20	0.06	37.26	57	1.0	57	900
AHU-1	VAV-1-4	HALL	CORRIDOR	266	0	0	0	0.06	15.96	16	1.0	16	300
AHU-1	VAV-1-5	SQUAD LEADER WORK	OFFICE SPACE	427	4	5	20	0.06	25.62	46	1.0	46	500
AHU-1	VAV-1-6	HALL	CORRIDOR	594	0	0	0	0.06	35.64	36	1.0	36	400
AHU-1	VAV-1-7	NCOIC	OFFICE SPACE	124	1	5	5	0.06	7.44	12	1.0	12	160
AHU-1	VAV-1-8	QUALITY CONTROL	OFFICE SPACE	174	1	5	5	0.06	10.44	15	1.0	15	250
AHU-1	VAV-1-9	BREAK ROOM/HALL	BREAK	1,237	6	5	30	0.06	74.22	104	1.0	104	950
AHU-1	VAV-1-10	SUPT. OFFICE	OFFICE SPACE	114	1	5	5	0.06	6.84	12	1.0	12	150
AHU-1	VAV-1-11	MANAGER OFFICE	OFFICE SPACE	171	1	5	5	0.06	10.26	15	1.0	15	250
AHU-1	VAV-1-12	WAITING AND ORDERLY	OFFICE SPACE	269	1	5	5	0.06	16.14	21	1.0	21	350
AHU-1	VAV-1-13	COMMANDER	OFFICE SPACE	171	1	5	5	0.06	10.26	15	1.0	15	275
AHU-1	VAV-1-14	FIRST SERGEANT	OFFICE SPACE	114	1	5	5	0.06	6.84	12	1.0	12	150
AHU-1	VAV-1-15	CONFERENCE ROOM	CONFERENCE	371	18	5	90	0.06	22.26	112	1.0	112	600
AHU-1	VAV-1-16	OPERATIONS OFFICER	OFFICE SPACE	114	1	5	5	0.06	6.84	12	1.0	12	150
AHU-1	VAV-1-17	RESOURCE PROTECTION	OFFICE SPACE	113	1	5	5	0.06	6.78	12	1.0	12	150
TOTALS AHU-1:				6,686	99		495		401.16	895		895	6,885
				(AZ)	(SPZ)		(SRP)		(SRA)	(VOU)		(VOZ)	(VPS=SVPZ)

UNCORRECTED OUTDOOR AIR CFM (VOU):	738
OCCUPANT DIVERSITY:	0.7
AVERAGE OUTDOOR AIR FRACTION AT AHU (XS):	0.295
SYSTEM VENTILATION EFFICIENCY = MINIMUM EVZ	0.634
CORRECTED OUTDOOR AIR CFM	1,164
DESIGN OUTDOOR AIR CFM:	1,200

AHU-1

REFERENCE SPECIFICATIONS FOR CONTROL POINTS AND SEQUENCE OF OPERATIONS.

VARIABLE AIR VOLUME STATIC PRESSURE SETPOINT NOTES

- INITIAL STATIC PRESSURE SETPOINT SHALL BE SET TO 1.8".
- FINAL STATIC PRESSURE SETPOINT SHALL BE ADJUSTED WITH TEST AND BALANCE.

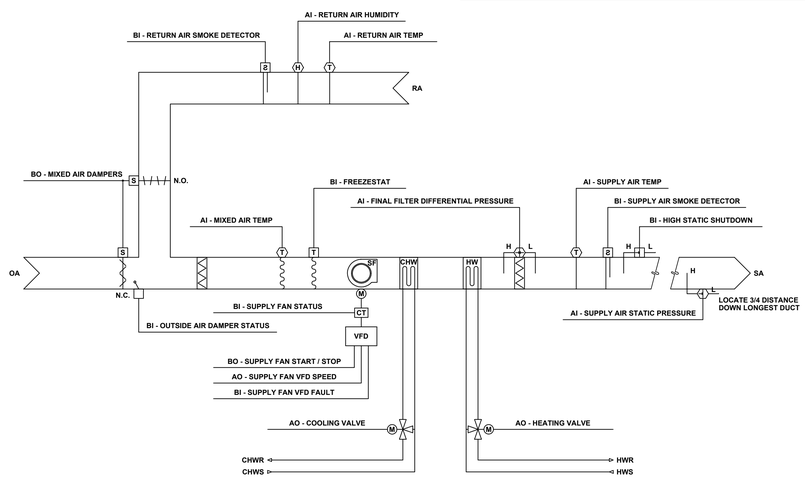

TYPICAL VARIABLE AIR VOLUME CONTROL DETAIL (AHU)

NOT TO SCALE

HVAC DETAILS AND COMPLIANCE CALCULATIONS

WHORTON ENGINEERING, INC.
HVAC – PLUMBING – PROCESS CONTROL
RANDALL WHORTON, P.E.
PHONE: (256) 820-9897
25 SUMMERALL GATE ROAD
ANNISTON, ALABAMA 36205

WHORTON ENGINEERING PROJECT NO. 24135

S|S&L
ARCHITECTURE & INTERIOR DESIGN
1115 Second Avenue North, Birmingham, AL 35203
Tel. 334.263.5102 | WWW.SSLARCH.COM

Rev.	Description	Date

Job Number: 12072
Date: JUNE 2024
Drawn By: JH
Checked By: RDW
Project Title:

New Security Building
117th Air Refueling Wing
Birmingham, AL

Sheet Title: HVAC DETAILS AND COMPLIANCE CALCULATIONS

Sheet Number: M2.6

06-20-2024

DIFFUSER SCHEDULE

Tag	Size	Type	Neck Size	Model Number	Manufacturer	Notes
SSD-6	12"X12"	SUPPLY	6"∅	TDC	TITUS	
SD-8	24"X24"	SUPPLY	8"∅	TDC	TITUS	
SD-10	24"X24"	SUPPLY	10"∅	TDC	TITUS	
ASD-6	24"X24"	SUPPLY	6"∅	TDC-AA	TITUS	ALUMINUM
ASD-8	24"X24"	SUPPLY	8"∅	TDC-AA	TITUS	ALUMINUM
ASD-10	24"X24"	SUPPLY	10"∅	TDC-AA	TITUS	ALUMINUM
SWS-1	20"X6"	SUPPLY		272RL	TITUS	
SWS-2	12"X6"	SUPPLY		272RL	TITUS	
SW-188	18"X8"	SUPPLY		272RL	TITUS	
DSD-1	24"X24"	SUPPLY	10"∅	TDCA	TITUS	
RG-1	24"X24"	RETURN	22"X22"	8RF	TITUS	1" FILTER
SWR-1	36"X8"	RETURN		33RLF	TITUS	1" FILTER
ATG-1	24"X24"	RETURN	22"X22"	8F	TITUS	ALUMINUM
AEG-1	24"X24"	EXHAUST	22"X22"	8F	TITUS	ALUMINUM
AEG-2	12"X12"	EXHAUST	11"X11"	8F	TITUS	ALUMINUM
SD-1	24"X24"	SUPPLY	10"∅	TDC	TITUS	
EG-1	24"X24"	EXHAUST	22"X22"	8F	TITUS	ALUMINUM
SD-12	24"X24"	SUPPLY	12"∅	TDC	TITUS	
FURNISH AND INSTALL AN INSULATION BLANKET ON THE BACK OF ALL DIFFUSERS AND GRILLES						

GENERAL NOTES:

1. ALL DIFFUSERS/GRILLE RUNOUTS SHALL INCLUDE SPIN-IN WITH DAMPER.
2. ALL OUTSIDE AIR RUNOUTS, EXHAUST, ETC. AND BRANCH DUCTS SHALL INCLUDE SPIN-IN WITH DAMPER
3. REFERENCE PLUMBING PLANS FOR CONDENSATE PIPING.
4. TEST AND BALANCE IS REQUIRED FOR ALL UNITS, DUCT, GRILLES, ETC. SHOWN ON PLANS. REFERENCE SPECIFICATIONS FOR ADDITIONAL INFORMATION.
5. ALL LOUVERS SHALL HAVE A PLENUM BOX. PLENUM BOX SHALL BE SIZED TO MATCH LOUVER DIMENSIONS. PLENUM BOX SHALL BE 2'-0" DEEP.
6. MECHANICAL CONTRACTOR SHALL COORDINATE ROUTING OF REFRIGERANT LINES AND DUCTWORK WITH ALL OTHER TRADES.
7. 10"X10" RUSKIN MODEL FD (OR APPROVED EQUAL), FIRE DAMPER WITH FACTORY SECURITY BARS.
8. 22"X10" RUSKIN MODEL FD (OR APPROVED EQUAL), FIRE DAMPER WITH FACTORY SECURITY BARS.
9. 22"X6" RUSKIN MODEL FD (OR APPROVED EQUAL), FIRE DAMPER WITH FACTORY SECURITY BARS.
10. 14"X14" TITUS SECURITY BAR, MODEL SG-BG-SLV OR APPROVED EQUAL.
11. 6"X6" TITUS SECURITY BAR, MODEL SG-BG-SLV OR APPROVED EQUAL.
12. 20"X6" TITUS SECURITY BAR, MODEL SG-BG-SLV OR APPROVED EQUAL.
13. 8"X8" TITUS SECURITY BAR, MODEL SG-BG-SLV OR APPROVED EQUAL.
14. 12"X12" RUSKIN MODEL FD (OR APPROVED EQUAL), FIRE DAMPER WITH FACTORY SECURITY BARS.
15. ABOVE CEILING IS BEING USED AS A RETURN AIR PLENUM.
16. FOR VAV INLET DUCT SIZE REFERENCE VAV BOX SCHEDULE
17. DH-2 TO INCLUDE A 12"X12" SUPPLY DUCT WITH ELBOW AND A 12"X12" RETURN DUCT WITH ELBOW. OPENINGS TO BE 3'-0" MINIMUM BETWEEN RETURN AND SUPPLY. CAP OPEN END OF DUCTS WITH 1/4"X1/4" WIRE MESH. MOUNT HUMIDISTAT ABOVE CEILING IN RETURN AIR PLENUM
18. ALL EXTERIOR EXPOSED HYDRONIC PIPING SHALL BE HEAT TRACED. 115-1-60 OUTLET IS REQUIRED.
19. RUN DUCT IN TRUSS WEB AREA ABOVE 12'-0" AFF

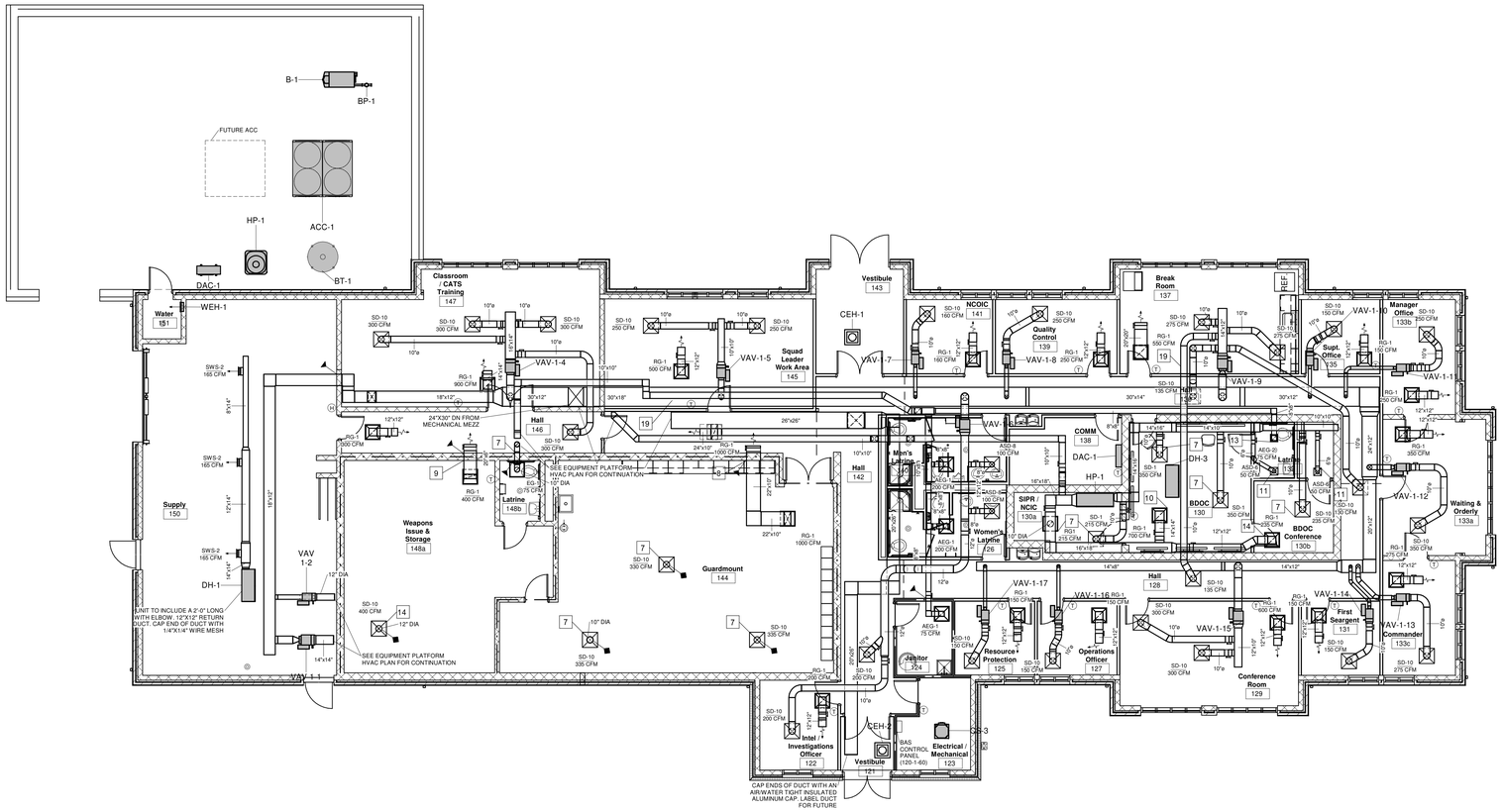

FIRST FLOOR HVAC PLANS - BASE BID

1/8" = 1'-0"

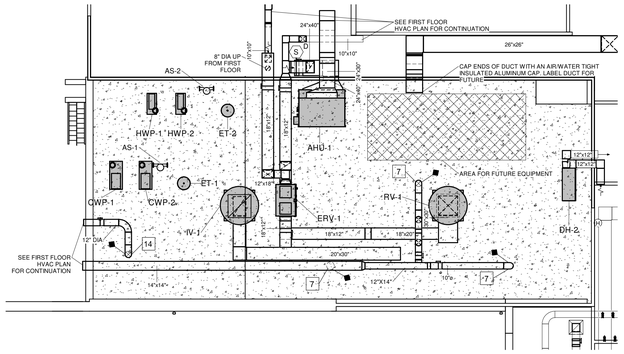

EQUIPMENT PLATFORM HVAC PLAN - BASE BID

1/8" = 1'-0"

HVAC PLANS - BASE BID

1/8" = 1'-0"

0' 4' 8' 16'

FIRE WALL LEGEND

1 HOUR WALL	—— · —— · —— · ——

WHORTON ENGINEERING, INC.
HVAC – PLUMBING – PROCESS CONTROL
RANDALL WHORTON, P.E.
PHONE: (256) 820-9897
25 SUMMERALL GATE ROAD
ANNISTON, ALABAMA 36205
WHORTON ENGINEERING PROJECT NO. 24135

S|S&L
ARCHITECTURE & INTERIOR DESIGN
1135 Squire Court | Huntsville, AL 35801-5004
Tel. 334.303.5102 | WWW.SSLARCH.COM

Rev.	Description	Date

Job Number: 12072

Date: JUNE 2024

Drawn By

Checked By

Project Title

A New Security Building

117th Air Refueling Wing
Birmingham, AL

Sheet Title: HVAC PLANS - BASE BID

Sheet Number: M3.1

STATE OF ALABAMA
RANDALL D. WHORTON
No. 14192
PROFESSIONAL ENGINEER
06-20-2024

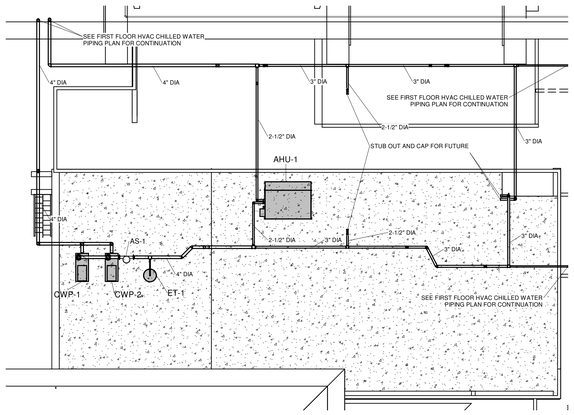

EQUIPMENT PLATFORM CHILLED WATER PIPING PLAN - BASE BID

1/8" = 1'-0"

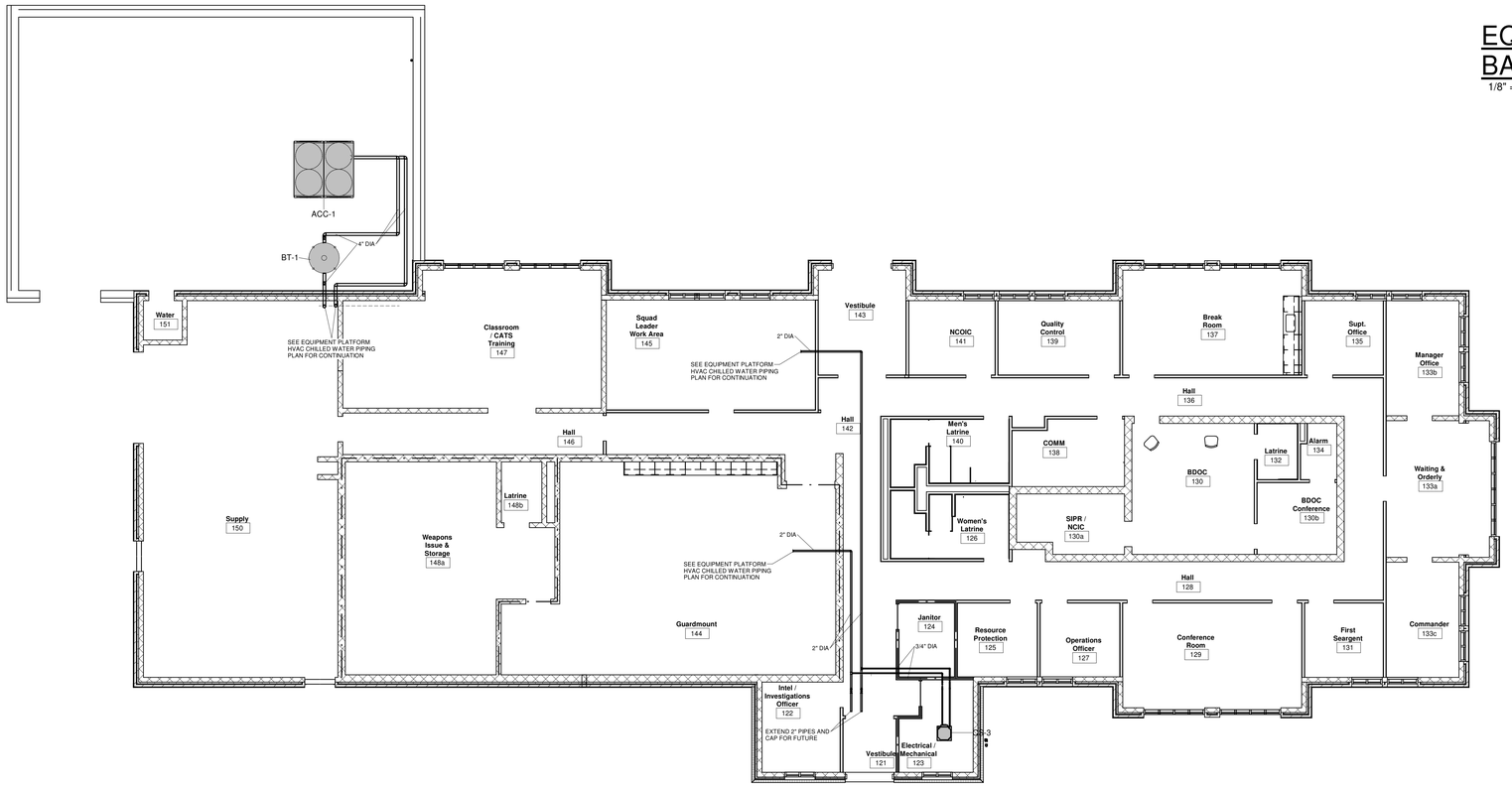

FIRST FLOOR HVAC CHILLED WATER PIPING PLAN - BASE BID

1/8" = 1'-0"

GENERAL NOTES:

1. ALL DIFFUSERS/GRILLE RUNOUTS SHALL INCLUDE SPIN-IN WITH DAMPER.
2. ALL OUTSIDE AIR RUNOUTS, EXHAUST, ETC. AND BRANCH DUCTS SHALL INCLUDE SPIN-IN WITH DAMPER
3. REFERENCE PLUMBING PLANS FOR CONDENSATE PIPING.
4. TEST AND BALANCE IS REQUIRED FOR ALL UNITS, DUCT, GRILLES, ETC. SHOWN ON PLANS. REFERENCE SPECIFICATIONS FOR ADDITIONAL INFORMATION.
5. ALL LOUVERS SHALL HAVE A PLENUM BOX. PLENUM BOX SHALL BE SIZED TO MATCH LOUVER DIMENSIONS. PLENUM BOX SHALL BE 2'-0" DEEP.
6. MECHANICAL CONTRACTOR SHALL COORDINATE ROUTING OF REFRIGERANT LINES AND DUCTWORK WITH ALL OTHER TRADES.
7. 10"X10" RUSKIN MODEL FD (OR APPROVED EQUAL), FIRE DAMPER WITH FACTORY SECURITY BARS.
8. 22"X10" RUSKIN MODEL FD (OR APPROVED EQUAL), FIRE DAMPER WITH FACTORY SECURITY BARS.
9. 22"X6" RUSKIN MODEL FD (OR APPROVED EQUAL), FIRE DAMPER WITH FACTORY SECURITY BARS.
10. 14"X14" TITUS SECURITY BAR, MODEL SG-BG-SLV OR APPROVED EQUAL.
11. 6"X6" TITUS SECURITY BAR, MODEL SG-BG-SLV OR APPROVED EQUAL.
12. 20"X6" TITUS SECURITY BAR, MODEL SG-BG-SLV OR APPROVED EQUAL.
13. 8"X8" TITUS SECURITY BAR, MODEL SG-BG-SLV OR APPROVED EQUAL.
14. 12"X12" RUSKIN MODEL FD (OR APPROVED EQUAL), FIRE DAMPER WITH FACTORY SECURITY BARS.
15. ABOVE CEILING IS BEING USED AS A RETURN AIR PLENUM.
16. FOR VAV INLET DUCT SIZE REFERENCE VAV BOX SCHEDULE
17. DH-2 TO INCLUDE A 12"X12" SUPPLY DUCT WITH ELBOW AND A 12"X12" RETURN DUCT WITH ELBOW. OPENINGS TO BE 3'-0" MINIMUM BETWEEN RETURN AND SUPPLY. CAP OPEN END OF DUCTS WITH 1/4"X1/4" WIRE MESH. MOUNT HUMIDISTAT ABOVE CEILING IN RETURN AIR PLENUM
18. ALL EXTERIOR EXPOSED HYDRONIC PIPING SHALL BE HEAT TRACED. 115-1-60 OUTLET IS REQUIRED.
19. RUN DUCT IN TRUSS WEB AREA ABOVE 12'-0" AFF

FIRE WALL LEGEND

1 HOUR WALL —— · —— · —— · ——

HVAC PIPING NOTES

1. REFERENCE PLAN VIEWS FOR PIPE SIZES
2. ALL UNITS TO INCLUDE BALL VALVES. (SEE DETAIL)
3. REFERENCE PLUMBING PLANS FOR CONDENSATE PIPING.
4. CONTRACTOR SHALL COORDINATE ROUTING OF HVAC HOT/CHILLED WATER PIPING WITH ALL OTHER TRADES.
5. RUN ALL PIPING IN TRUSS WEB AREA ABOVE 12'-0" AFF

HVAC CHILLED WATER PIPING PLANS - BASE BID

1/8" = 1'-0"

0' 4' 8' 16'

WHORTON ENGINEERING, INC.

HVAC – PLUMBING – PROCESS CONTROL

RANDALL WHORTON, P.E.
PHONE: (256) 820-9897

25 SUMMERALL GATE ROAD
ANNISTON, ALABAMA 36205

WHORTON ENGINEERING PROJECT NO. 24135

S|S&L
ARCHITECTURE & INTERIOR DESIGN
1115 South Governors Drive, Huntsville, AL 35804
Tel. 334.263.5162 | WWW.SSLARCH.COM

Rev.	Description	Date

Job Number: 12072

Date: JUNE 2024

Drawn By

Checked By

Project Title

A New Security Building

117th Air Refueling Wing
Birmingham, AL

Sheet Title: HVAC CHILLED WATER PIPING PLANS - BASE BID

Sheet Number: M4.1

STATE OF ALABAMA
RANDALL D. WHORTON
No.14192
PROFESSIONAL ENGINEER
06-20-2024

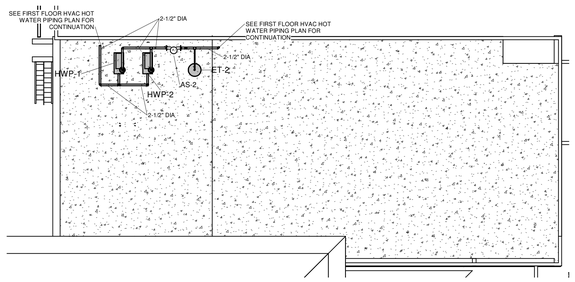

EQUIPMENT PLATFORM HVAC HOT WATER PIPING PLAN - BASE BID

1/8" = 1'-0"

GENERAL NOTES:

1. ALL DIFFUSERS/GRILLE RUNOUTS SHALL INCLUDE SPIN-IN WITH DAMPER.
2. ALL OUTSIDE AIR RUNOUTS, EXHAUST, ETC. AND BRANCH DUCTS SHALL INCLUDE SPIN-IN WITH DAMPER
3. REFERENCE PLUMBING PLANS FOR CONDENSATE PIPING.
4. TEST AND BALANCE IS REQUIRED FOR ALL UNITS, DUCT, GRILLES, ETC. SHOWN ON PLANS. REFERENCE SPECIFICATIONS FOR ADDITIONAL INFORMATION.
5. ALL LOUVERS SHALL HAVE A PLENUM BOX. PLENUM BOX SHALL BE SIZED TO MATCH LOUVER DIMENSIONS. PLENUM BOX SHALL BE 2'-0" DEEP.
6. MECHANICAL CONTRACTOR SHALL COORDINATE ROUTING OF REFRIGERANT LINES AND DUCTWORK WITH ALL OTHER TRADES.
7. 10"X10" RUSKIN MODEL FD (OR APPROVED EQUAL), FIRE DAMPER WITH FACTORY SECURITY BARS.
8. 22"X10" RUSKIN MODEL FD (OR APPROVED EQUAL), FIRE DAMPER WITH FACTORY SECURITY BARS.
9. 22"X6" RUSKIN MODEL FD (OR APPROVED EQUAL), FIRE DAMPER WITH FACTORY SECURITY BARS.
10. 14"X14" TITUS SECURITY BAR, MODEL SG-BG-SLV OR APPROVED EQUAL.
11. 6"X6" TITUS SECURITY BAR, MODEL SG-BG-SLV OR APPROVED EQUAL.
12. 20"X6" TITUS SECURITY BAR, MODEL SG-BG-SLV OR APPROVED EQUAL.
13. 8"X8" TITUS SECURITY BAR, MODEL SG-BG-SLV OR APPROVED EQUAL.
14. 12"X12" RUSKIN MODEL FD (OR APPROVED EQUAL), FIRE DAMPER WITH FACTORY SECURITY BARS.
15. ABOVE CEILING IS BEING USED AS A RETURN AIR PLENUM.
16. FOR VAV INLET DUCT SIZE REFERENCE VAV BOX SCHEDULE
17. DH-2 TO INCLUDE A 12"X12" SUPPLY DUCT WITH ELBOW AND A 12"X12" RETURN DUCT WITH ELBOW. OPENINGS TO BE 3'-0" MINIMUM BETWEEN RETURN AND SUPPLY. CAP OPEN END OF DUCTS WITH 1/4"X1/4" WIRE MESH. MOUNT HUMIDISTAT ABOVE CEILING IN RETURN AIR PLENUM
18. ALL EXTERIOR EXPOSED HYDRONIC PIPING SHALL BE HEAT TRACED. 115-1-60 OUTLET IS REQUIRED.
19. RUN DUCT IN TRUSS WEB AREA ABOVE 12'-0" AFF

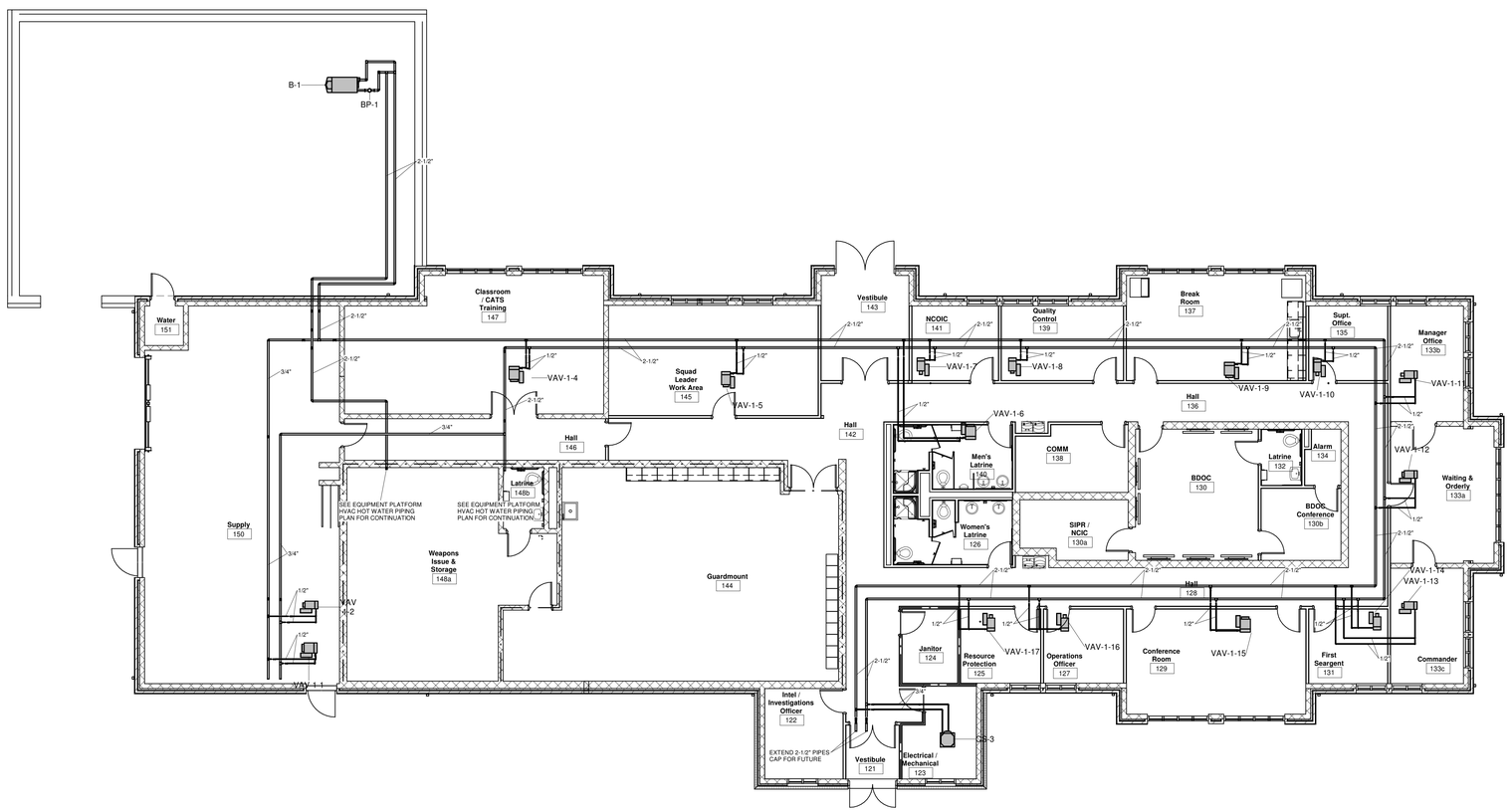

FIRST FLOOR HVAC HOT WATER PIPING PLAN -BASE BID

1/8" = 1'-0"

HVAC HOT WATER PIPING PLANS - BASE BID

1/8" = 1'-0"

0' 4' 8' 16'

HVAC PIPING NOTES

1. REFERENCE PLAN VIEWS FOR PIPE SIZES
2. ALL UNITS TO INCLUDE BALL VALVES. (SEE DETAIL)
3. REFERENCE PLUMBING PLANS FOR CONDENSATE PIPING.
4. CONTRACTOR SHALL COORDINATE ROUTING OF HVAC HOT/CHILLED WATER PIPING WITH ALL OTHER TRADES.
5. RUN ALL PIPING IN TRUSS WEB AREA ABOVE 12'-0" AFF

FIRE WALL LEGEND

1 HOUR WALL —— · —— · —— · ——

WHORTON ENGINEERING, INC.
HVAC – PLUMBING – PROCESS CONTROL
RANDALL WHORTON, P.E.
PHONE: (256) 820-8897
25 SUMMERALL GATE ROAD
ANNISTON, ALABAMA 36205

WHORTON ENGINEERING PROJECT NO. 24135

ALABAMA LICENSED No.14192 PROFESSIONAL ENGINEER RANDALL D. WHORTON 06-20-2024

S|S&L
ARCHITECTURE & INTERIOR DESIGN
1115 South Colonnade Parkway, Birmingham, AL 35204
Tel: 334.263.5162 | WWW.SSLARCH.COM

Rev.	Description	Date

Job Number: 12072

Date: JUNE 2024

Drawn By

Checked By

Project Title

A New Security Building

117th Air Refueling Wing
Birmingham, AL

Sheet Title: HVAC HOT WATER PIPING PLANS - BASE BID

Sheet Number: M5.1

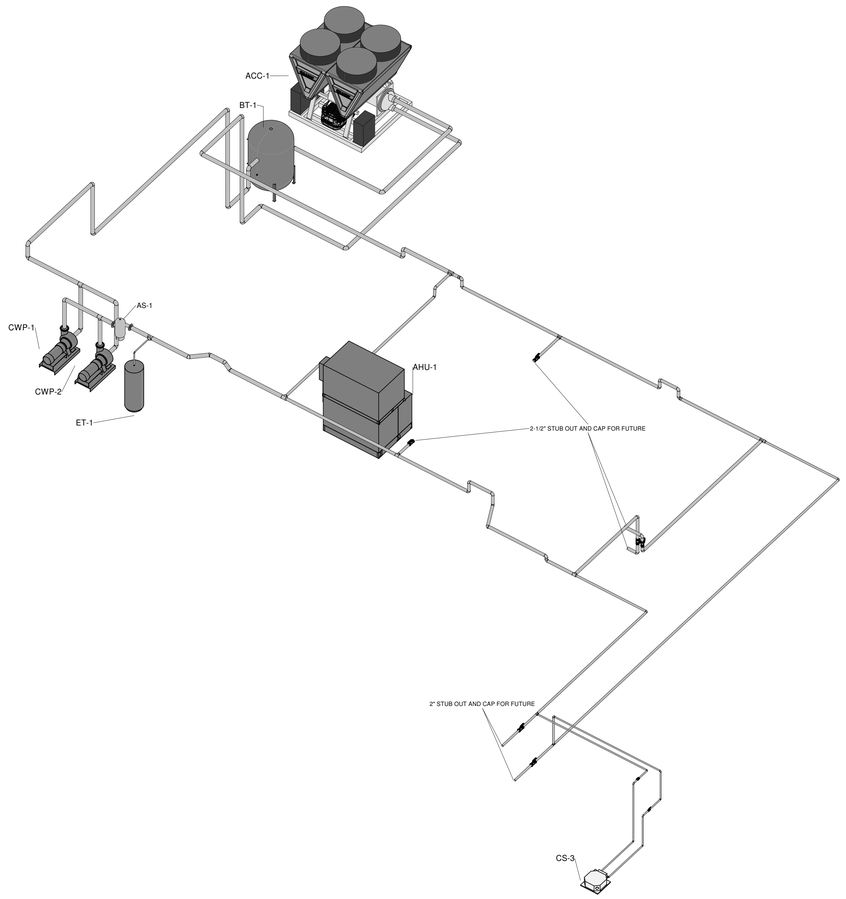

HVAC CHILLED WATER PIPING RISER DIAGRAM - BASE BID

HVAC PIPING NOTES

1. REFERENCE PLAN VIEWS FOR PIPE SIZES
2. ALL UNITS TO INCLUDE BALL VALVES. (SEE DETAIL)
3. REFERENCE PLUMBING PLANS FOR CONDENSATE PIPING.
4. CONTRACTOR SHALL COORDINATE ROUTING OF HVAC HOT/CHILLED WATER PIPING WITH ALL OTHER TRADES.
5. RUN ALL PIPING IN TRUSS WEB AREA ABOVE 12'-0" AFF

WHORTON ENGINEERING, INC.
HVAC – PLUMBING – PROCESS CONTROL
RANDALL WHORTON, P.E.
PHONE: (256) 820-9897
25 SUMMERALL GATE ROAD
ANNISTON, ALABAMA 36205

WHORTON ENGINEERING PROJECT NO. 24135

S|S&L
ARCHITECTURE & INTERIOR DESIGN
1115 South Governor's Drive, Huntsville, AL 35801
Tel 334.263.5162 | WWW.SSLARCH.COM

Rev.	Description	Date

Job Number
12072

Date
JUNE 2024

Drawn By

Checked By

Project Title

A New Security Building

117th Air Refueling Wing
Birmingham, AL

Sheet Title
HVAC CHILLED WATER PIPING RISER DIAGRAM - BASE BID

Sheet Number
M6.1

STATE OF ALABAMA
RANDALL WHORTON
No.14192
PROFESSIONAL ENGINEER
06-20-2024

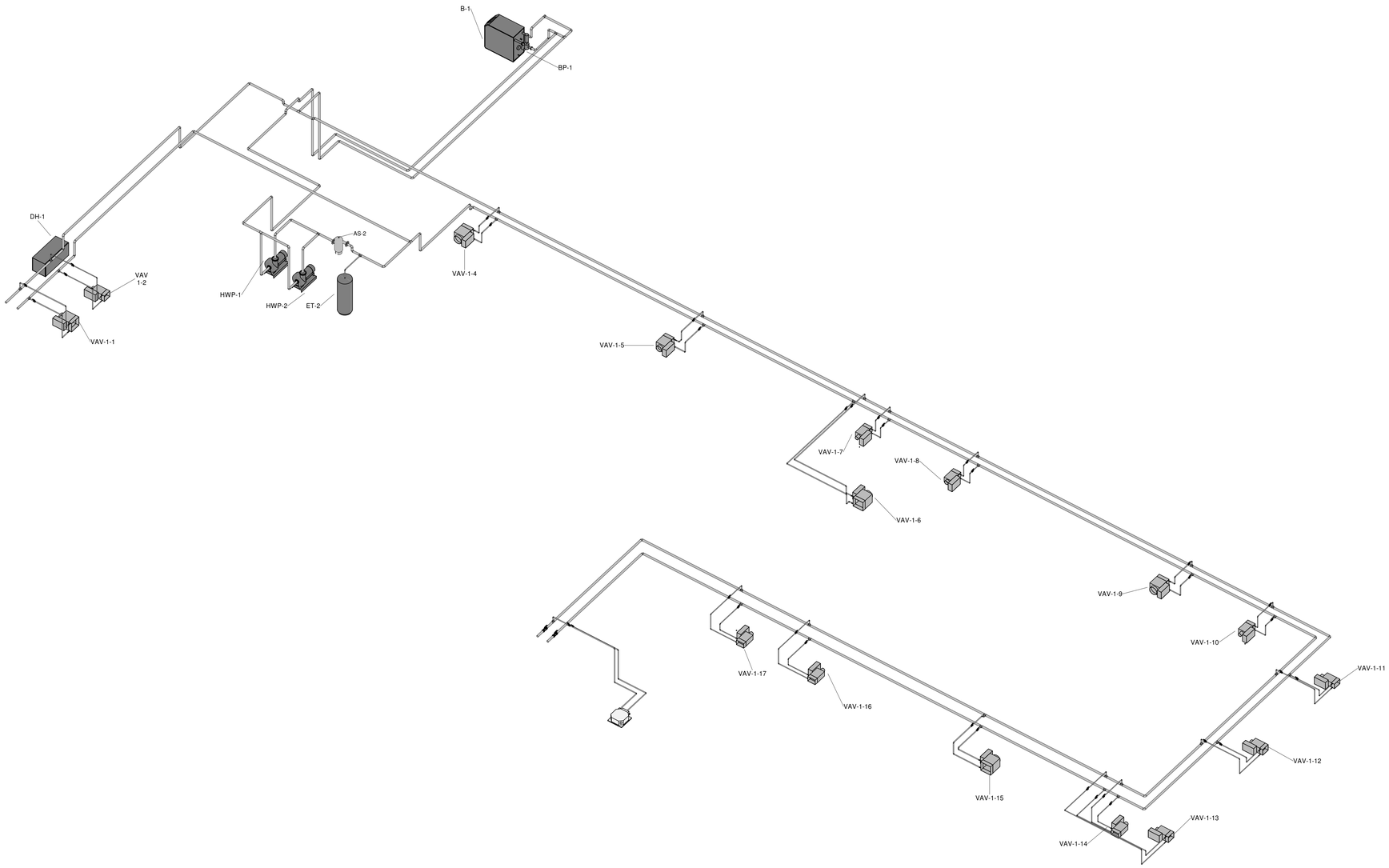

HVAC PIPING NOTES

1. REFERENCE PLAN VIEWS FOR PIPE SIZES
2. ALL UNITS TO INCLUDE BALL VALVES. (SEE DETAIL)
3. REFERENCE PLUMBING PLANS FOR CONDENSATE PIPING.
4. CONTRACTOR SHALL COORDINATE ROUTING OF HVAC HOT/CHILLED WATER PIPING WITH ALL OTHER TRADES.
5. RUN ALL PIPING IN TRUSS WEB AREA ABOVE 12'-0" AFF

HVAC HOT WATER PIPING RISER DIAGRAM - BASE BID

WHORTON ENGINEERING, INC.
HVAC – PLUMBING – PROCESS CONTROL
RANDALL WHORTON, P.E.
PHONE: (256) 820-9897
25 SUMMERALL GATE ROAD
ANNISTON, ALABAMA 36205
WHORTON ENGINEERING PROJECT NO. 24135

S|S&L
ARCHITECTURE & INTERIOR DESIGN
1115 South Colonnade Parkway, Birmingham, AL 35204
Tel 334.263.5162 | WWW.SSLARCH.COM

Rev.	Description	Date

Job Number: 12072
Date: JUNE 2024
Drawn By:
Checked By:
Project Title:

A New Security Building
117th Air Refueling Wing
Birmingham, AL

Sheet Title: HVAC HOT WATER PIPING RISER DIAGRAM - BASE BID

Sheet Number: M6.2

ALABAMA No.14192 PROFESSIONAL ENGINEER RANDALL D. WHORTON
06-20-2024

PLUMBING NOTES

1. THESE DRAWINGS ARE SCHEMATIC IN NATURE AND ARE NOT INTENDED TO SHOW ALL POSSIBLE CONDITIONS. IT IS INTENDED THAT A COMPLETE PLUMBING SYSTEM BE PROVIDED WITH ALL NECESSARY EQUIPMENT, ACCESSORIES, AND CONTROLS COMPLETELY COORDINATED WITH ALL TRADES. ALL REQUIREMENTS GIVEN IN THESE DOCUMENTS SHALL BE STRICTLY CONFORMED TO. ANY ITEMS AND LABOR REQUIRED FOR A COMPLETE PLUMBING SYSTEM IN ACCORDANCE WITH ALL APPLICABLE CODES, STANDARDS, LOCAL AUTHORITIES, AND THESE CONTRACT DOCUMENTS SHALL BE FURNISHED WITHOUT INCURRING ANY ADDITIONAL COST TO THE OWNER. CAREFULLY REVIEW ALL CONTRACT DOCUMENTS AND THE DESIGN OF OTHER TRADES BEFORE PREPARING SHOP DRAWINGS.
2. COORDINATE ALL WORK WITH ARCHITECTURAL, STRUCTURAL, HVAC, AND ELECTRICAL TRADES. PIPE ROUTING SHOWN IS DIAGRAMMATIC. PROVIDE ALL OFFSETS, ETC., TO AVOID INTERFERENCES WITH EQUIPMENT, PIPING, DUCTWORK, LIGHTS, CONDUIT, ETC.
3. FIELD VERIFY EXACT SIZE, MATERIAL, AND LOCATION OF ALL EXISTING UTILITIES BEFORE BEGINNING WORK.
4. VERIFY LOCATION OF ALL FIXTURES WITH ARCHITECTURAL PLANS.
5. VERIFY ALL FIXTURE MOUNTING HEIGHTS WITH ENGINEER AND ARCHITECT.
6. COORDINATE ALL FLOOR PENETRATIONS WITH STRUCTURAL DRAWINGS. SET SLEEVES IN FLOORS/WALLS AND ATTACHMENTS FOR HANGERS AS CONSTRUCTION PROGRESSES. ALL PENETRATIONS MUST BE SEALED AND HELD AS TIGHT TO COLUMNS OR WALLS AS POSSIBLE.
7. PROVIDE 12"X12" ACCESS PANEL FOR SHOCK ABSORBERS AND ALL VALVES LOCATED ABOVE NON-ACCESSIBLE CEILINGS AND INSIDE PIPE CHASES. EXACT LOCATION MUST BE COORDINATED WITH ARCHITECTURAL AND APPROVED BY ARCHITECT PRIOR TO INSTALLATION.
8. ALL PIPING SHALL BE CONCEALED INSIDE WALLS, WITHIN PIPE CHASES, OR ABOVE CEILINGS. HOLD ALL PIPING ABOVE CEILING AS HIGH AS POSSIBLE.
9. COORDINATE ALL UNDERGROUND PIPING WITH GRADE BEAMS, WALL FOOTINGS, AND OTHER STRUCTURAL CONDITIONS.
10. PLUMBING CONTRACTOR SHALL MAKE FINAL CONNECTIONS TO ALL EQUIPMENT INDICATED ON DRAWINGS FINAL CONNECTION SHALL INCLUDE ANY ADAPTORS, NIPPLES, SHUT-OFF VALVES, PRV'S, SHOCK ABSORBERS, BACKFLOW PREVENTION DEVICES, REGULATORS, ETC.
11. ALL STRUCTURAL PENETRATIONS (SLEEVES, BLOCK OUTS, ETC.) ARE TO BE LOCATED AND COORDINATED IN THE FIELD BY THE CONTRACTOR IN RELATION TO THE REQUIREMENTS OF FINAL EQUIPMENT AND FIXTURES SELECTED.
12. CONTRACTOR SHALL MAKE FINAL CONNECTIONS TO ALL DOMESTIC WATER AND SANITARY SEWERS, UNLESS OTHERWISE NOTED.
13. ALL PLUMBING COMPONENTS TO BE LEAD-FREE.
14. ENCASE ALL WASTE/WATER PIPING, VALVES, WATER HEATER, OR ANY OTHER ASSOCIATED PLUMBING EQUIPMENT BELOW WALL HUNG LAVATORY, WITH TRUEBRO LAV-SHIELD (OR APPROVED EQUAL). THIS APPLIES TO ALL ADA LAVS, LAVS WITH MIXING VALVES MOUNTED BELOW LAV, AND ALL LAVS THAT INCLUDE INSTANTANEOUS ELECTRIC WATER HEATERS MOUNTED BELOW LAVS. LAV GUARD SHALL INCLUDE STAINLESS STEEL TAMPER RESISTANT SCREWS. LAV-SHIELD SHALL BE ORDERED TO MATCH SPECIFIED/APPROVED LAVATORY.
15. HORIZONTAL DRAINAGE PIPING OF 2-1/2" DIAMETER OR LESS SHALL BE INSTALLED WITH A FALL OF NOT LESS THAN 1/4" PER FOOT. PIPING 3" AND LARGER SHALL BE INSTALLED WITH A FALL OF NOT LESS THAN 1/8" PER FOOT.
16. SET FLOOR DRAIN ELEVATION DEPRESSED BELOW FINISHED SLAB ELEVATION AS LISTED BELOW TO PROVIDE PROPER FLOOR SLOPE TO DRAIN:
    5 FOOT DRAIN RADIUS : 1/2" DEPRESSION
    10 FOOT DRAIN RADIUS : 3/4" DEPRESSION
    15 FOOT DRAIN RADIUS : 1" DEPRESSION
    20 FOOT DRAIN RADIUS : 1-1/4" DEPRESSION
    25 FOOT DRAIN RADIUS ; 1-1/2" DEPRESSION
17. ALL TRAP ARMS, P-TRAPS, ETC. EXPOSED UNDER LAVATORIES SHALL BE 18. GA. CHROME PLATED.
18. ABOVE GROUND DRAINAGE AND VENT PIPING LOCATED WITHIN FIRE RATED WALLS SHALL BE COPPER PIPE IN ACCORDANCE WITH STANDARDS ASTM B42 AND B302 OR CAST IRON PIPE IN ACCORDANCE WITH STANDARDS ASTM A 74; ASTM A 888; CISPI 301. COORDINATE WITH ARCHITECTURAL LIFE SAFETY PLANS FOR EXACT LOCATION OF ALL FIRE WALLS.
19. ALL CONDENSATE DRAIN PIPING LOCATED WITHIN RETURN AIR PLENUM, SHALL BE TYPE "L" COPPER. ALL COPPER PIPING MUST BE INSULATED WITH 1/2" ARMAFLEX OR APPROVED EQUAL. PIPING CAN ALSO BE SCHEDULE 40 CPVC. ALL CONDENSATE DRAIN PIPING THAT IS NOT LOCATED WITHIN RETURN AIR PLENUM MAY BE SCHEDULE 40 PVC WITH 1/2" ARMAFLEX INSULATION (OR APPROVED EQUAL). INSULATION SHALL BE INSTALLED PER MANUFACTURER'S RECOMMENDATION. COORDINATE WITH HVAC PLAN FOR REQUIREMENT AND LOCATION OF AIR PLENUM(S).
20. INSTALL ANGLE COVER OVER CONDENSATE LINES, SPRINKLER LINES, ETC. THAT CROSS MEZZANINE/MECH ROOM FLOOR WHERE TRIPPING MIGHT BE A HAZARD. PRIME AND PAINT ANGLE COVER SAFETY YELLOW COLOR.
21. VERIFY ORIENTATION OF FLUSHING MECHANISM ON TOILET/URINAL WITH ARCHITECT/ENGINEER PRIOR TO ROUGH-IN.
22. PROVIDE WATER PRESSURE REDUCING/REGULATING VALVE ON MAIN SERVICE WHEN MAIN PRESSURE EXCEEDS 75 PSI AT ANY TIME OF DAY. COORDINATE WITH LOCAL UTILITY.
23. PROVIDE REDUCED PRESSURE BACKFLOW PREVENTER AT ALL CONNECTIONS TO MECHANICAL EQUIPMENT. KITCHEN AND LAUNDRY EQUIPMENT, ETC., AS REQUIRED BY CODE AND BY LOCAL AUTHORITY. CONTRACTOR IS TO VERIFY WITH THE LOCAL AUTHORITY THE TYPE OF BACKFLOW PREVENTION DEVICE REQUIRED FOR ALL APPLICATIONS PRIOR TO INSTALLATION.
24. ALL OVERHEAD WATER PIPING SHALL BE INSTALLED BELOW CEILING INSULATION.
25. INSTALL BACKFLOW PREVENTION IN ACCORDANCE WITH CITY AND STATE REQUIREMENTS. INSTALL ON MAIN DOMESTIC WATER SERVICE TO THE BUILDING.
26. CONTRACTOR SHALL INSTALL WATER HAMMER ARRESTER EQUAL TO ZURN SERIES 1700 AT EACH PLUMBING GROUP.
27. CONTRACTOR TO FURNISH AND INSTALL ANTI-SIPHON VALVE ON EACH WATER HEATER.
28. CONTRACTOR SHALL FURNISH AND INSTALL BALL VALVES FOR WATER SHUT-OFF AT FIXTURE GROUPINGS.
29. ALL STOPS/SUPPLIES SHALL BE CHROME PLATED BRASS.
30. ALL GAS PIPING SHALL BE FURNISHED AND INSTALLED IN ACCORDANCE WITH NFPA 54, INTERNATIONAL FUEL GAS CODE.
31. ALL EXPOSED INTERIOR OR EXTERIOR GAS LINES ARE TO BE PAINTED BY THE PLUMBING CONTRACTOR WITH ONE COAT OF LATEX PAINT. INTERIOR COLOR TO MATCH WALL. EXTERIOR COLOR TO BE SELECTED BY ARCHITECT.
32. PROVIDE INSULATING UNION BETWEEN ABOVE AND BELOW GROUND GAS PIPING.

PLUMBING EQUIPMENT SCHEDULE

MARK NO.	FIXTURE TYPE	MANUFACTURER'S MODEL NO.	MOUNT	MOUNT HEIGHT	WASTE SIZE	VENT SIZE	C.W. SIZE	H.W. SIZE	NOTES
WC-1A	WATER CLOSET WALL HUNG ADA HE MANUAL FLUSH	ZURN MODEL NO. Z5615-BWL OR APPROVED EQUAL	WALL	16-1/8" TO RIM	4"	2"	1 1/4"	–	WHITE ELONGATED VITREOUS CHINA, ZURN Z1209-N(L/R)4 WALL HANGER SUPPORT (SEE PLAN FOR R/L HAND OFFSET), WHITE OPEN FRONT SOLID PLASTIC SEAT, BOLT CAPS 12" ROUGH-IN, ZURN Z6000AV-ONE MANUAL HIGH EFFICIENCY FLUSH VALVE
WC-2	WATER CLOSET WALL HUNG ADA HE MANUAL FLUSH	ZURN MODEL NO. Z5615-BWL OR APPROVED EQUAL	WALL	16-1/8" TO RIM	4"	2"	1 1/4"	–	WHITE ELONGATED VITREOUS CHINA, ZURN Z1209-ND(L/R)4 DOUBLE WALL HANGER SUPPORT (SEE PLAN FOR R/L HAND OFFSET), WHITE OPEN FRONT SOLID PLASTIC SEAT, BOLT CAPS 12" ROUGH-IN, ZURN Z6000AV-ONE MANUAL HIGH EFFICIENCY FLUSH VALVE
U-1A	URINAL ADA HE MANUAL FLUSH	ZURN MODEL NO. Z5798 OR APPROVED EQUAL	WALL	17" TO LIP	2"	1-1/4"	3/4"	–	WHITE VITREOUS CHINA, ZURN Z5758.207.00 HE MANUAL OPERATED FV, BOLT CAPS, WALL HANGER, 1/8 GAL. VERSION
L-1	LAVATORY, ADA 20"X17" SENSOR HARDWIRED	ZURN MODEL NO. Z5114 OR APPROVED EQUAL	CABINET	–	1-1/4"	1-1/4"	1/2"	1/2"	WHITE VITREOUS CHINA, OPEN GRID STRAINER, SLOAN MODEL NO. ETF-610 HARDWIRED SENSOR FAUCET, W/ 0.5 GPM AERATOR, 4" TRIM PLATE, P-TRAP W/ CLEANOUT, SUPPLIES W/ STOPS
L-1A	LAVATORY, ADA 20"X18" SENSOR HARDWIRED	ZURN MODEL NO. Z5344 OR APPROVED EQUAL	WALL	34" TO LIP	1-1/4"	1-1/4"	1/2"	1/2"	WHITE VITREOUS CHINA, OPEN GRID STRAINER, SLOAN MODEL NO. ETF-610 HARDWIRED SENSOR FAUCET, W/ 0.5 GPM AERATOR, 4" TRIM PLATE, P-TRAP W/ CLEANOUT; CONCEALED ARM CARRIER; SUPPLIES W/ STOPS
SS-1	SERVICE SINK	FIAT MODEL NO. MSB-2424 OR APPROVED EQUAL	FLOOR	SEE DETAIL	3"	2"	1/2"	1/2"	MOLDED-STONE, DELTA NO. 28T8183, 3" IPS STRAINER, POLISHED CHROME FAUCET WITH VACUUM BREAKER, HOSE/ WALL BRACKET, MOP HANGER
LT-1	LAUNDRY TUB	FIAT MODEL NO. SF-1F TUF-TUB OR APPROVED EQUAL	FLOOR	–	1-1/2"	1-1/2"	1/2"	1/2"	DELTA MODEL NO. 28C2383 FAUCET WITH VACUUM BREAKER, P-TRAP WITH CLEANOUT, FIAT MODEL A-2 OVERFLOW PIPE
S-1	STAINLESS SINK SINGLE COMPARTMENT	JUST MODEL NO. SL-ADA-2219-A-GR OR APPROVED EQUAL	CABINET	–	1-1/2"	1-1/4"	1/2"	1/2"	JUST MODEL NO. J-35 STRAINER, DELTA MODEL NO. 100LF-HDF (1.5 GPM) FAUCET, SUPPLIES WITH STOPS, P-TRAP WITH CLEANOUT, 4-1/2" DEEP BOWL
SH-1A	SHOWER BUILT-IN, ADA	BUILT-IN OR APPROVED EQUAL	FLOOR	–	2"	2"	1/2"	1/2"	DELTA MODEL T17TH335 WITH PRESSURE BALANCED MULTI CHOICE MIXING VALVE; ZURN MODEL ZN-415 5" DIA. NICKEL BRONZE SHOWER DRAIN APPROVED EQUAL : FLORESTONE 400 BARRIER FREE SHOWER BASE
EW-1	EMERGENCY EYEWASH/ FACEWASH, ADA	HAWS NO. 7260BT-7270BT OR APPROVED EQUAL	WALL	36" TO RIM	1-1/4"	1-1/4"	1/2"	1/2"	BARRIER FREE, MV-3 POWERS MODEL ES150 EMERGENCY TEMPERING VALVE, FACTORY SET AT 85°F, FACTORY TRAP, SIGNAGE.

EQUALS BY ELJER, KOHLER, TOTO, AND AMERICAN STANDARD WILL BE ACCEPTED.

PLUMBING SPECIALITY SCHEDULE

MARK NO.	FIXTURE TYPE	MANUFACTURER'S MODEL NO.	MOUNT	MOUNT HEIGHT	WASTE SIZE	VENT SIZE	C.W. SIZE	H.W. SIZE	MIXED WATER SIZE	NOTES
FD-1	FLOOR DRAIN	ZURN MODEL NO. ZN-415B OR APPROVED EQUAL	FLOOR	–	4"	2"	–	–	–	5" DIA. NICKEL BRONZE ADJUSTABLE TOP PROSET SYSTEM INC. TG34IP RETROFIT TRAP GUARD
HD-1	HUB DRAIN	PROSET MODEL SYSTEM INC. MODEL NO. TG34IP OR APPROVED EQUAL	FLOOR	–	4"	2"	–	–	–	STUB TO 1" A.F.F.
HD-2	HUB DRAIN	PROSET MODEL SYSTEM INC. MODEL NO. TG34IP OR APPROVED EQUAL	FLOOR	–	2"	2"	–	–	–	STUB UP IN BASE CABINET
WH-1	WALL HYDRANT	WOODFORD MODEL NO. B65 OR APPROVED EQUAL	WALL	18" TO 24"	–	–	3/4"	–	–	FREEZELESS, ANTI-SIPHON, LOCKING BOX
WB-1	ICEMAKER WALLBOX	OATEY MODEL NO. 38574 OR APPROVED EQUAL	WALL	36" A.F.F.	–	–	1/2"	–	–	1/4 TURN BRASS BALL VALVE – COPPER SWEAT – STANDARD PACK WITH 6' STAINLESS STEEL HOSE
F.C.O.	FLOOR CLEANOUT	ZURN MODEL NO. ZN-1400-2 OR APPROVED EQUAL	FLOOR	–	4"	–	–	–	–	6" DIA. ADJUSTABLE NICKEL BRONZE TOP
W.C.O.	WALL CLEANOUT	ZURN MODEL NO. Z-1441 OR APPROVED EQUAL	WALL	–	4"	–	–	–	–	7" DIA. STAINLESS STEEL COVER
AD-1	ACCESS DOOR 8" X 8"	ELMDOR MODEL NO. SLK OR APPROVED EQUAL	WALL	VERIFY WITH ARCH.	–	–	–	–	–	AUTOMATIC SPRING DOOR CLOSER. STAINLESS STEEL CONSTRUCTION INSTALL MIXING VALVE BEHIND DOOR
W.H.A.	WATER HAMMER ARRESTOR	ZURN SERIES 1700 OR APPROVED EQUAL	–	–	–	–	VARIES	VARIES	–	

EQUALS BY JAY R SMITH, ZURN, OATEY, OR JONES WILL BE ACCEPTED

ELECTRIC WATER COOLER SCHEDULE

MARK NO.	FIXTURE TYPE	MANUFACTURER'S MODEL NO.	MOUNT	MOUNT HEIGHT	WASTE SIZE	VENT SIZE	C.W. SIZE	NOTES
EWC-1	ELECTRIC WATER COOLER, ADA SPLIT LEVEL	ELKAY MODEL NO. EZSTL8WSLK OR APPROVED EQUAL	WALL	34-1/2" TO NOZ. CENTER	1-1/4"	1-1/4"	1/2"	ADA MOUNTED AT 34.5" AFF TO NOZZLE CENTERLINE, STAINLESS STEEL W/ TRIM BEZEL, WITH BOTTLE FILLING STATION, FILTER, MOUNTING KIT

GAS WATER HEATER SCHEDULE

MARK NO.	MODEL NO.	BTU INPUT	RECOVERY GPH @ 100° RISE	GAS CONN SIZE	WIDTH SIZE	DEPTH SIZE	HEIGHT SIZE	WATER CONN SIZE	APPROX SHIP WEIGHT
GWH-1	RHEEM NO. HE119-199 OR APP'V EQUAL.	199,000	230	3/4"	27"	36"	73"	2"	405

NOTES:

1. 3" CPVC DIRECT VENT
2. FURNISH AND INSTALL ROOM CARBON MONOXIDE DETECTOR. CARBON MONOXIDE DETECTOR SHALL BE EQUAL TO KIDDE HARDWIRED (120V) CARBON MONOXIDE DETECTOR WITH 9-VOLT BATTERY BACKUP.

PLUMBING DRAWING INDEX

SHEET NO.	SHEET TITLE
P1.1	PLUMBING SCHEDULES, LEGEND, AND NOTES
P1.2	PLUMBING DETAILS
P2.1	FIRST FLOOR WASTE & CONDENSATE PLUMBING PLAN (BASE BID)
P3.1	FIRST FLOOR WATER & GAS PLUMBING PLAN (BASE BID)
P4.1	MECHANICAL PLATFORM PLUMBING PLAN (BASE BID)
P5.1	WASTE & GAS PLUMBING RISER DIAGRAMS (BASE BID)
P5.2	WATER PLUMBING RISER DIAGRAMS (BASE BID)

MIXING VALVE SCHEDULE

MARK NO.	MANUFACTURER'S MODEL NO.	TEMPERATURE (°F)	INLET	OUTLET
MV-1	POWERS SERIES LFLM495	SET AT 90°-110°	1/2"	1/2"
MV-2	POWERS SERIES LFLM496	SET AT 90°-110°	3/4"	3/4"
MV-3	POWERS MODEL ES150	FACTORY SET 80°	1/2"	1/2"

NOTES:
1. UNLESS OTHERWISE NOTED, MIXING VALVES SHALL CONFORM TO ASSE 1070 AND ASSE 1017
2. EMERGENCY EYEWASH THERMOSTATIC MIXING VALVES SHALL CONFORM TO ASSE 1071

CIRCULATOR PUMP SCHEDULE

MARK NO.	TYPE	GPM	TOTAL HEAD FT. W.G.	MAXIMUM H.P.	MINIMUM EFFICIENCY	ELECTRICAL	DESIGN MFGR.	DESIGN MFGR. MODEL NO.
CP-1	IN-LINE CENTRIF.	0-11	0-4.5	1/40	–	120-1-60	TACO	006e3LC

NOTES:
(1) SmartPlus-e HOT WATER RECIRCULATION PUMP WITH SmartPlug CONTROLS FOR DOMESTIC WATER
(2) 1" BRONZE SWEAT
(3) 6 FT. CORD

PLUMBING LEGEND

Symbol	Description	Symbol	Description
—SS—	SANITARY SEWER		FLOOR DRAIN
—CD—	CONDENSATE DRAIN		HUB DRAIN
—CW—	COLD WATER		HOT WATER RETURN PUMP
—110°—	110° HOT WATER	SV	BALL VALVE
—140°—	140° HOT WATER		BALL VALVE IN PLASTIC METER BOX W/CAST IRON LID
—140°HWR—	140° HOT WATER RETURN		GAS COCK
—V—	VENT		CHECK VALVE
—NG—	NATURAL GAS		THREE WAY VALVE
VTR	VENT THRU ROOF	AAV	AIR ADMITTANCE VALVE (SBCCI APPROVED)

CODES AND STANDARDS

- **2021 INTERNATIONAL PLUMBING CODE**
- **2021 INTERNATIONAL MECHANICAL CODE**
- **2021 INTERNATIONAL FUEL GAS CODE**
- **2021 INTERNATIONAL FIRE CODE**
- **2010 ADA STANDARDS FOR ACCESSIBLE DESIGN**

PVC PIPE HANGER SPACING GUIDE

PVC PIPE SUPPORTS - SCHEDULE 40

MAXIMUM SUPPORT SPACING (FEET)

NPS (INCHES)	OPERATING TEMPERATURE (°F)		
	60	100	140
1/2	4.5	4	2.5
3/4	5	4	2.5
1	5.5	4.5	2.5
1-1/4	5.5	5	3
1-1/2	6	5	3
2	6	5	3
3	7	6	3.5
4	7.5	6.5	4
6	8.5	7.5	4.5
8	9	8	4.5

NOTE: PLASTIC PIPE SUPPORTS SHALL BE AS NOTED ABOVE UNLESS MANUFACTURER'S RECOMMENDATION IS MORE STRINGENT FOR THE APPLICATION.

PLUMBING SCHEDULES, LEGEND, AND NOTES

WHORTON ENGINEERING, INC.
HVAC – PLUMBING – PROCESS CONTROL
RANDALL WHORTON, P.E.
PHONE: (256) 820-9897
25 SUMMERALL GATE ROAD
ANNISTON, ALABAMA 36205

WHORTON ENGINEERING PROJECT NO. 24135

SS&L
ARCHITECTURE & INTERIOR DESIGN
1115 South Court Street | Montgomery, AL 36104
Tel. 334. 263. 5162 | WWW.SSLARCH.COM

Rev.	Description	Date

Job Number: 12072
Date: JUNE 2024
Drawn By: TMW
Checked By: RDW
Project Title: New Security Building, 117th Air Refueling Wing, Birmingham, AL.
Sheet Title: PLUMBING SCHEDULES, LEGEND, AND NOTES
Sheet Number: P1.1

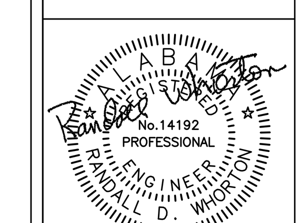

06-20-2024

WATER CLOSET WALL HANGER DETAILS

Z1209-N4 SINGLE IN STUD WALL

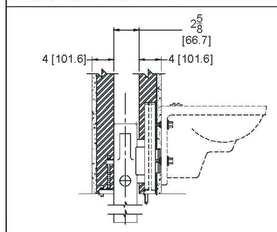

Z1209-N4 SINGLE IN BLOCK WALL

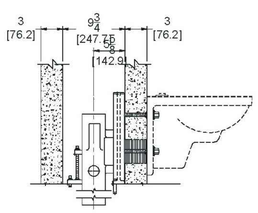

Z1209-ND4 DOUBLE IN STUD WALL

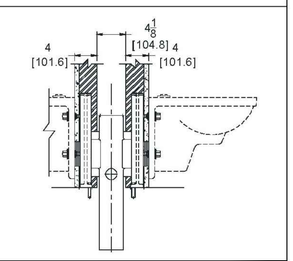

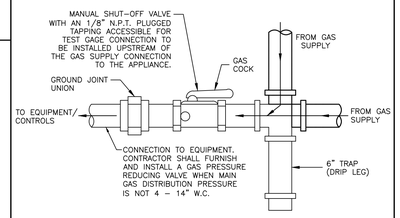

GAS CONNECTION TO EQUIPMENT DETAIL

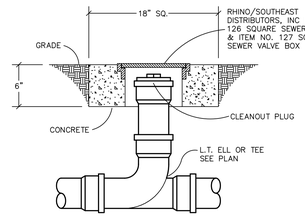

CLEANOUT UP TO GRADE

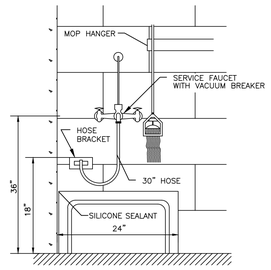

MOP SINK DETAIL

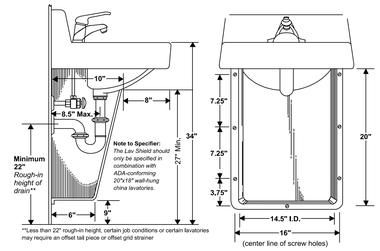

ENCASE ALL WASTE/WATER PIPING, VALVES, WATER HEATER, OR ANY OTHER ASSOCIATED PLUMBING EQUIPMENT BELOW WALL HUNG LAVATORY, WITH TRUEBRO LAV-SHIELD (OR APPROVED EQUAL). THIS APPLIES TO ALL ADA LAVS. LAVS WITH MIXING VALVES MOUNTD BELOW LAV. AND ALL LAVS THAT INCLUDE INSTANTANEOUS ELECTRIC WATER HEATERS MOUNTED BELOW LAVS. LAV GUARD SHALL INCLUDE STAINLESS STEEL TAMPER RESISTANT SCREWS. SPECIAL PRE-CUT FOR LAVATORY TO BE INSTALLED. LAV-SHIELD SHALL BE ORDERED TO MATCH SPECIFIED LAVATORY.

TYPICAL LAVATORY WITH "LAV SHIELD" DETAIL

NOTES:

1. **INSTALL WATER HEATER ON SUPPORT/LEGS OR 4" CONCRETE PAD 6" LARGER THAN TANK.**
2. **FURNISH AND INSTALL ROOM CARBON MONOXIDE DETECTOR. CARBON MONOXIDE DETECTOR SHALL BE EQUAL TO KIDDE HARDWIRE (120V) CARBON MONOXIDE DETECTOR WITH 9-VOLT BATTERY BACKUP.**

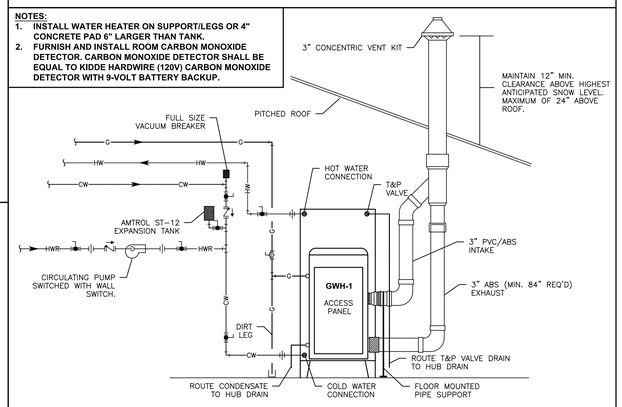

TYPICAL GAS WATER HEATER DETAIL

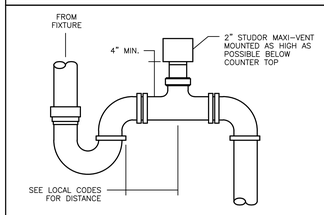

TYPICAL ADMITTANCE VALVE DETAIL

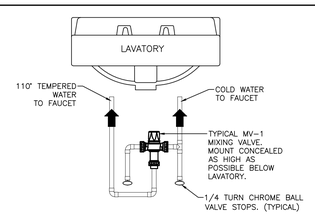

TYPICAL MIXING VALVE INSTALLATION

WIRE MUSHROOM E-STOP TO WATER HEATER CONTROL BOARD TO ENABLE/DISABLE HEATING OPERATION.

INSTALL IN ACCORDANCE WITH MANUFACTURER'S RECOMMENDATION INCLUDED WITHIN WATER HEATER INSTRUCTION MANUAL AND SERVICE HANDBOOK.

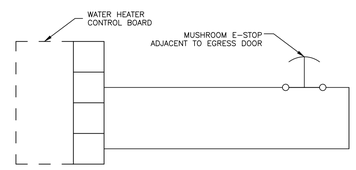

TYP. WATER HEATER EMERGENCY SHUT-OFF DETAIL

PLUMBING DETAILS

NOT TO SCALE

WHORTON ENGINEERING, INC.
HVAC – PLUMBING – PROCESS CONTROL
RANDALL WHORTON, P.E.
PHONE: (256) 820-9897
25 SUMMERALL GATE ROAD
ANNISTON, ALABAMA 36205

WHORTON ENGINEERING PROJECT NO. 24135

S|S&L
ARCHITECTURE & INTERIOR DESIGN
1115 South Governors Drive, Huntsville, AL 35801
Tel. 334.365.5162 | WWW.SSLARCH.COM

Rev.	Description	Date

Job Number: 12072
Date: JUNE 2024
Drawn By: TMW
Checked By: RDW
Project Title

New Security Building
117th Air Refueling Wing
Birmingham, AL

Sheet Title: PLUMBING DETAILS

Sheet Number: P1.2

06-20-2024

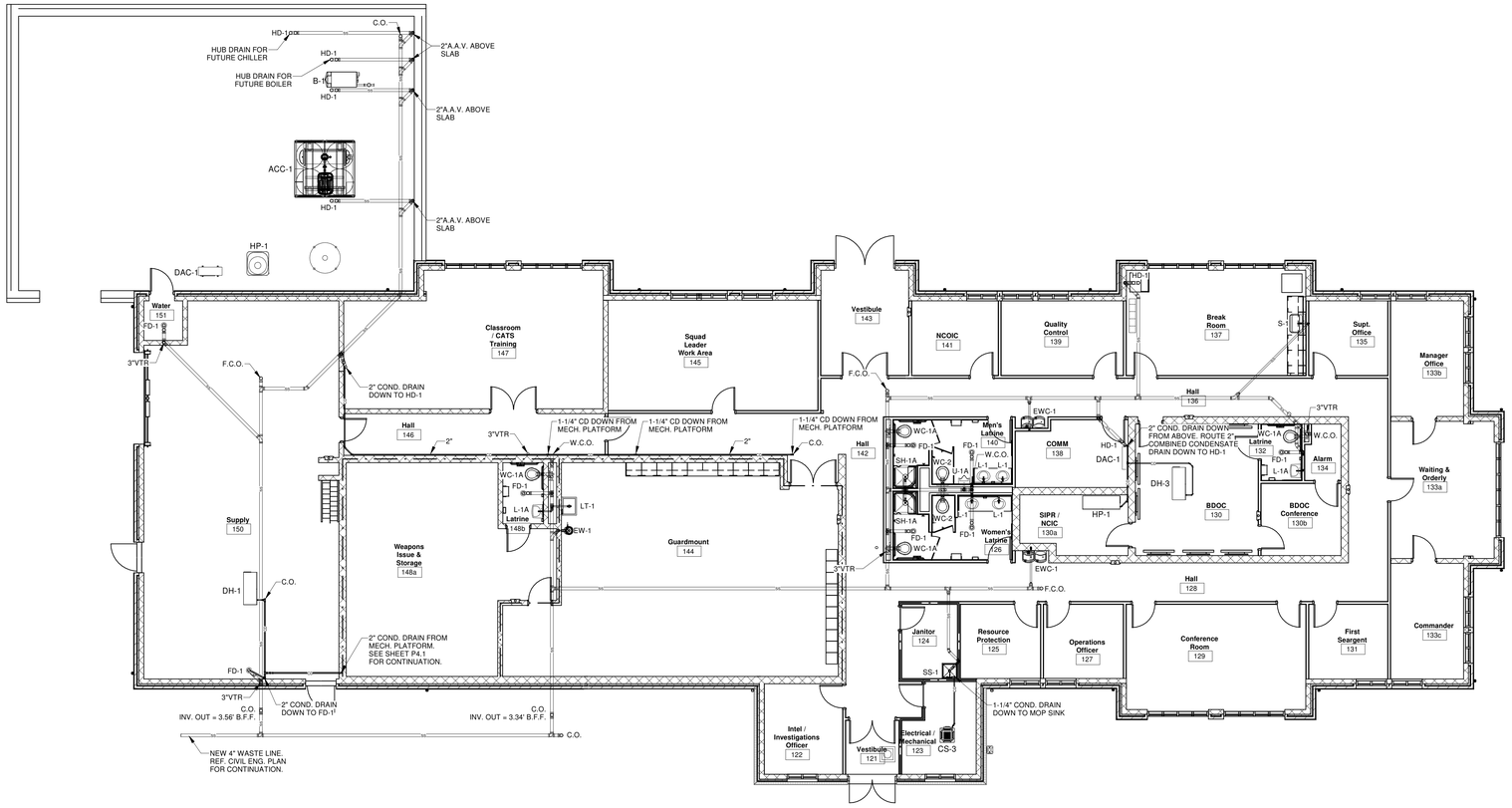

SR1 | P2.1 | P5.1

FIRST FLOOR WASTE & CONDENSATE PLUMBING PLAN (BASE BID)

1/8" = 1'-0"

0' 4' 8' 16'

NOTE:
ROUTE ALL OVERHEAD WASTE/VENT PIPING ABOVE 12'-0" A.F.F. AND WITHIN WEB OF METAL STUD TRUSSES.

NOTE:

1 ABOVE CEILING IS BEING USED AS A RETURN AIR PLENUM.

FIRE WALL LEGEND

1 HOUR WALL

WHORTON ENGINEERING, INC.

HVAC – PLUMBING – PROCESS CONTROL

RANDALL WHORTON, P.E.
PHONE: (256) 820-9897

25 SUMMERALL GATE ROAD
ANNISTON, ALABAMA 36205

WHORTON ENGINEERING PROJECT NO. 24135

S|S&L
ARCHITECTURE & INTERIOR DESIGN
1115 South Governor | Montgomery, AL 36104
Tel. 334.263.5162 | WWW.SSLARCH.COM

Rev.	Description	Date

Job Number
12072

Date
JUNE 2024

Drawn By

Checked By

Project Title

A New Security Building

117th Air Refueling Wing
Birmingham, AL

Sheet Title
FIRST FLOOR WASTE & CONDENSATE PLUMBING PLAN (BASE BID)

Sheet Number

P2.1

ALABAMA LICENSED PROFESSIONAL ENGINEER No.14192 RANDALL WHORTON
06-20-2024

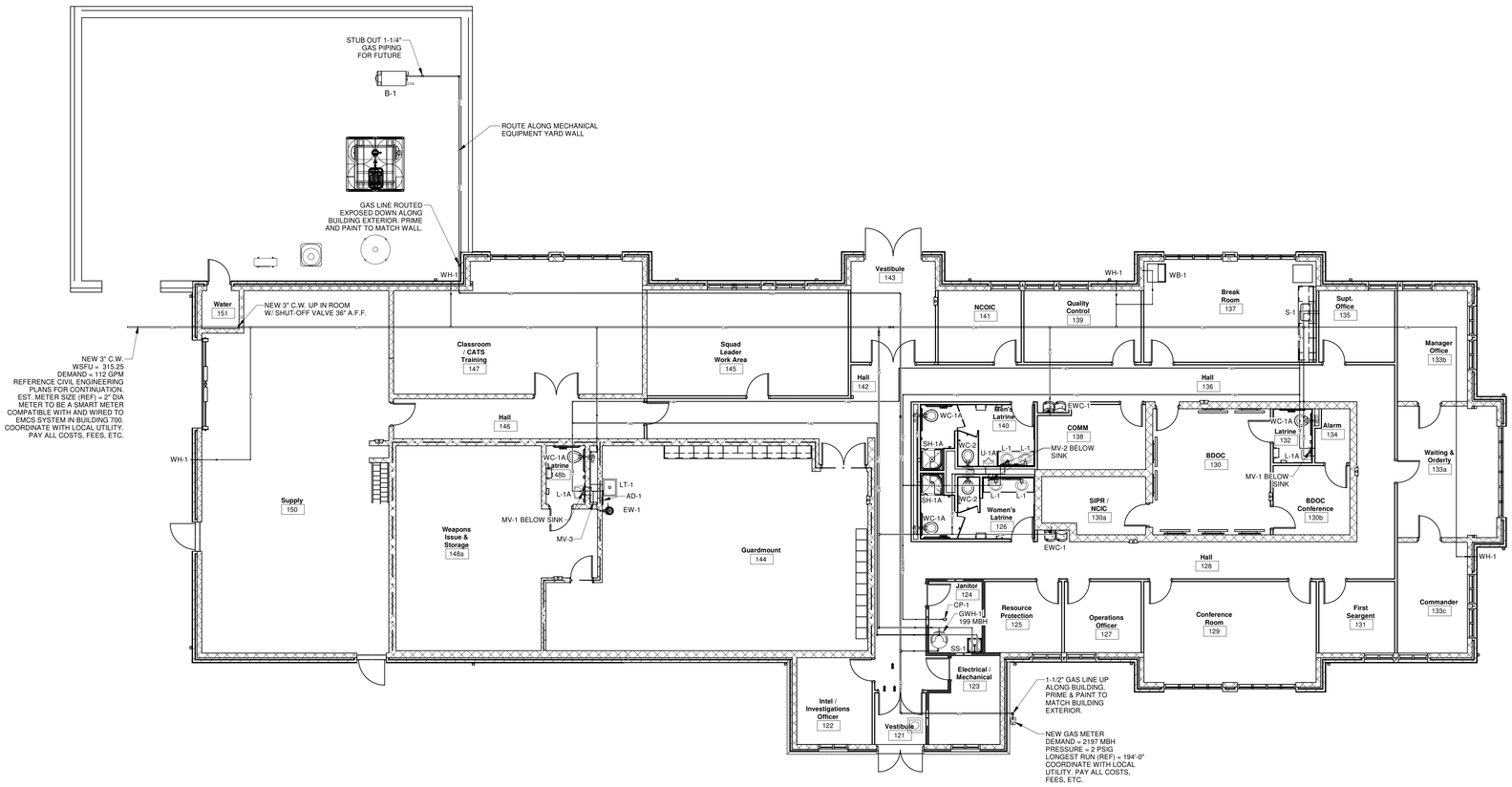

GR1 P3.1 P5.1 | WR1 P3.1 P5.2

FIRST FLOOR WATER & GAS PLUMBING PLAN (BASE BID)

1/8" = 1'-0"

0' 4' 8' 16'

NOTES:
1. ROUTE ALL OVERHEAD DOMESTIC HOT & COLD WATER, AND NATURAL GAS PIPING ABOVE 12'-0" A.F.F. AND WITHIN WEB OF METAL STUD TRUSSES.
2. REFER TO RISER DIAGRAMS FOR PIPE SIZES.

NOTE:

1 ABOVE CEILING IS BEING USED AS A RETURN AIR PLENUM.

FIRE WALL LEGEND

1 HOUR WALL

WHORTON ENGINEERING, INC.
HVAC – PLUMBING – PROCESS CONTROL
RANDALL WHORTON, P.E.
PHONE: (256) 820-9897
25 SUMMERALL GATE ROAD
ANNISTON, ALABAMA 36205

WHORTON ENGINEERING PROJECT NO. 24135

S|S&L
ARCHITECTURE & INTERIOR DESIGN
1115 South Governor | Montgomery, AL 36104
Tel. 334.263.5162 | WWW.SSLARCH.COM

Rev.	Description	Date

Job Number: 12072

Date: JUNE 2024

Drawn By

Checked By

Project Title

A New Security Building

117th Air Refueling Wing
Birmingham, AL

Sheet Title: FIRST FLOOR WATER & GAS PLUMBING PLAN (BASE BID)

Sheet Number: P3.1

R. B. WHORTON
ALABAMA
No.14192
PROFESSIONAL ENGINEER
06-20-2024

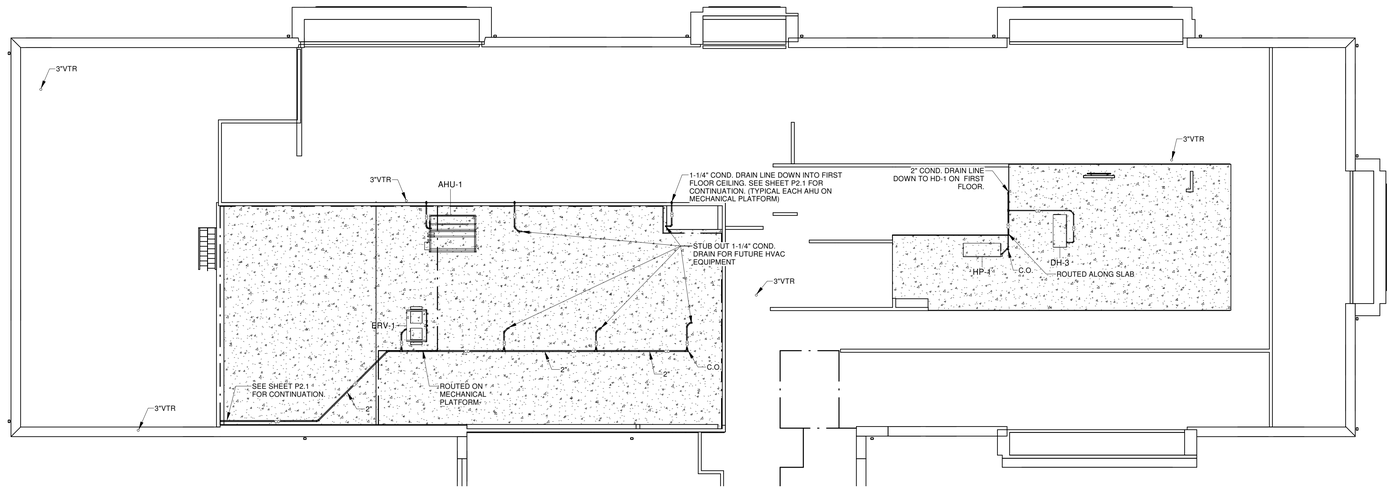

MECHANICAL PLATFORM PLUMBING PLAN (BASE BID)

1/8" = 1'-0"

0' 4' 8' 16'

NOTE:

1 ABOVE CEILING IS BEING USED AS A RETURN AIR PLENUM.

WHORTON ENGINEERING, INC.

HVAC – PLUMBING – PROCESS CONTROL

RANDALL WHORTON, P.E.
PHONE: (256) 820-9897

25 SUMMERALL GATE ROAD
ANNISTON, ALABAMA 36205

WHORTON ENGINEERING PROJECT NO. 24135

S|S&L

ARCHITECTURE & INTERIOR DESIGN
1115 South Governor's Mansion Ave. Montgomery, AL 36104
Tel. 334.263.5162 | WWW.SSLARCH.COM

Rev.	Description	Date

Job Number
12072

Date
JUNE 2024

Drawn By

Checked By

Project Title

A New Security Building

117th Air Refueling Wing
Birmingham, AL

Sheet Title
MECHANICAL PLATFORM PLUMBING PLAN (BASE BID)

Sheet Number

P4.1

ALABAMA LICENSED PROFESSIONAL ENGINEER No. 14192 RANDALL D. WHORTON

06-20-2024

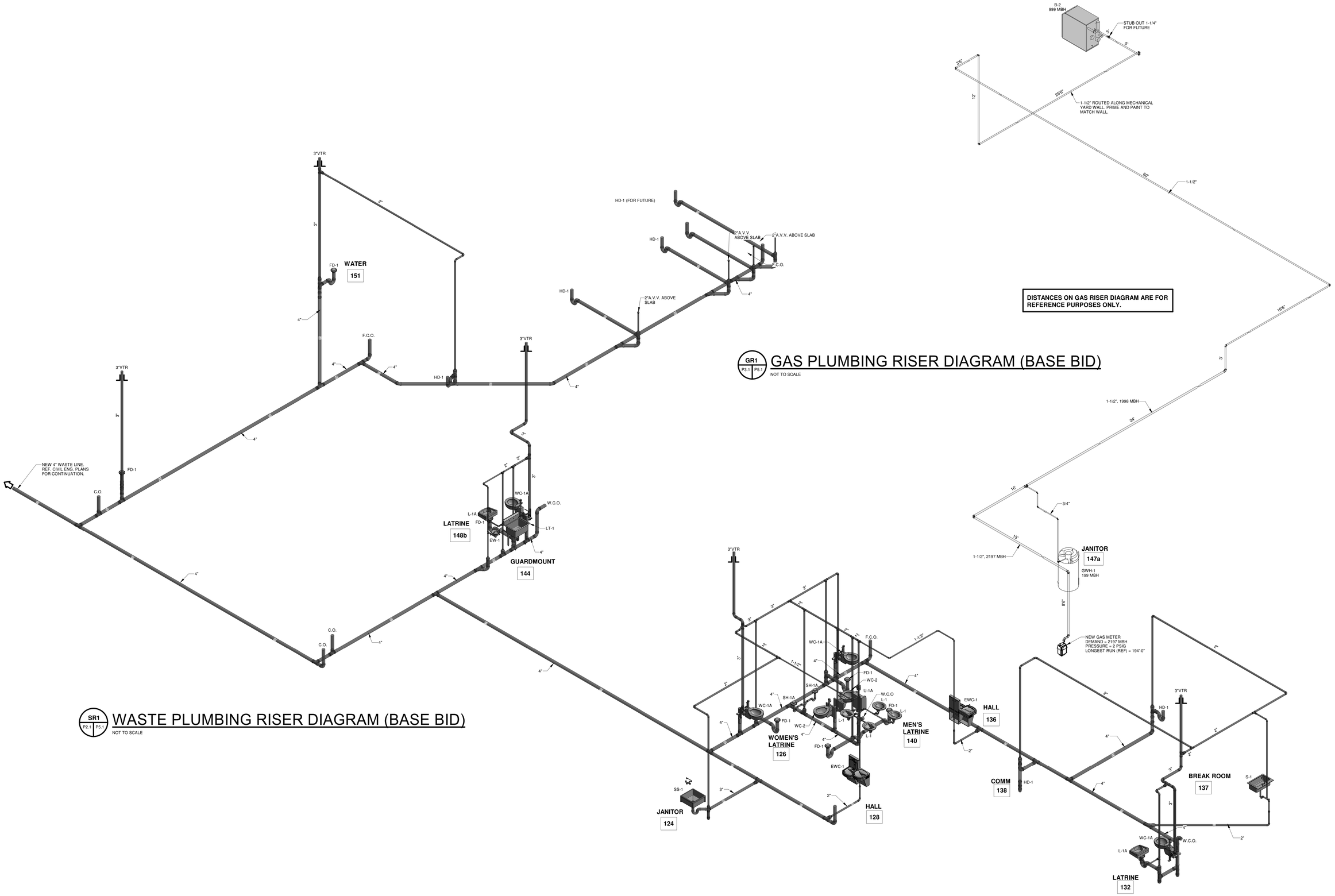

DISTANCES ON GAS RISER DIAGRAM ARE FOR REFERENCE PURPOSES ONLY.

GR1 P3.1 P5.1

GAS PLUMBING RISER DIAGRAM (BASE BID)

NOT TO SCALE

SR1 P2.1 P5.1

WASTE PLUMBING RISER DIAGRAM (BASE BID)

NOT TO SCALE

WHORTON ENGINEERING, INC.

HVAC – PLUMBING – PROCESS CONTROL

RANDALL WHORTON, P.E.
PHONE: (256) 820-9897

25 SUMMERALL GATE ROAD
ANNISTON, ALABAMA 36205

WHORTON ENGINEERING PROJECT NO. 24135

S|S&L
ARCHITECTURE & INTERIOR DESIGN
1115 South Governor Hampton Blvd.
Tel. 334.263.5162 | WWW.SSLARCH.COM

Rev.	Description	Date

Job Number: 12072

Date: JUNE 2024

Drawn By

Checked By

Project Title

A New Security Building

117th Air Refueling Wing
Birmingham, AL

Sheet Title: WASTE & GAS PLUMBING RISER DIAGRAMS (BASE BID)

Sheet Number: P5.1

ALABAMA RANDALL D. WHORTON No.14192 PROFESSIONAL ENGINEER
06-20-2024

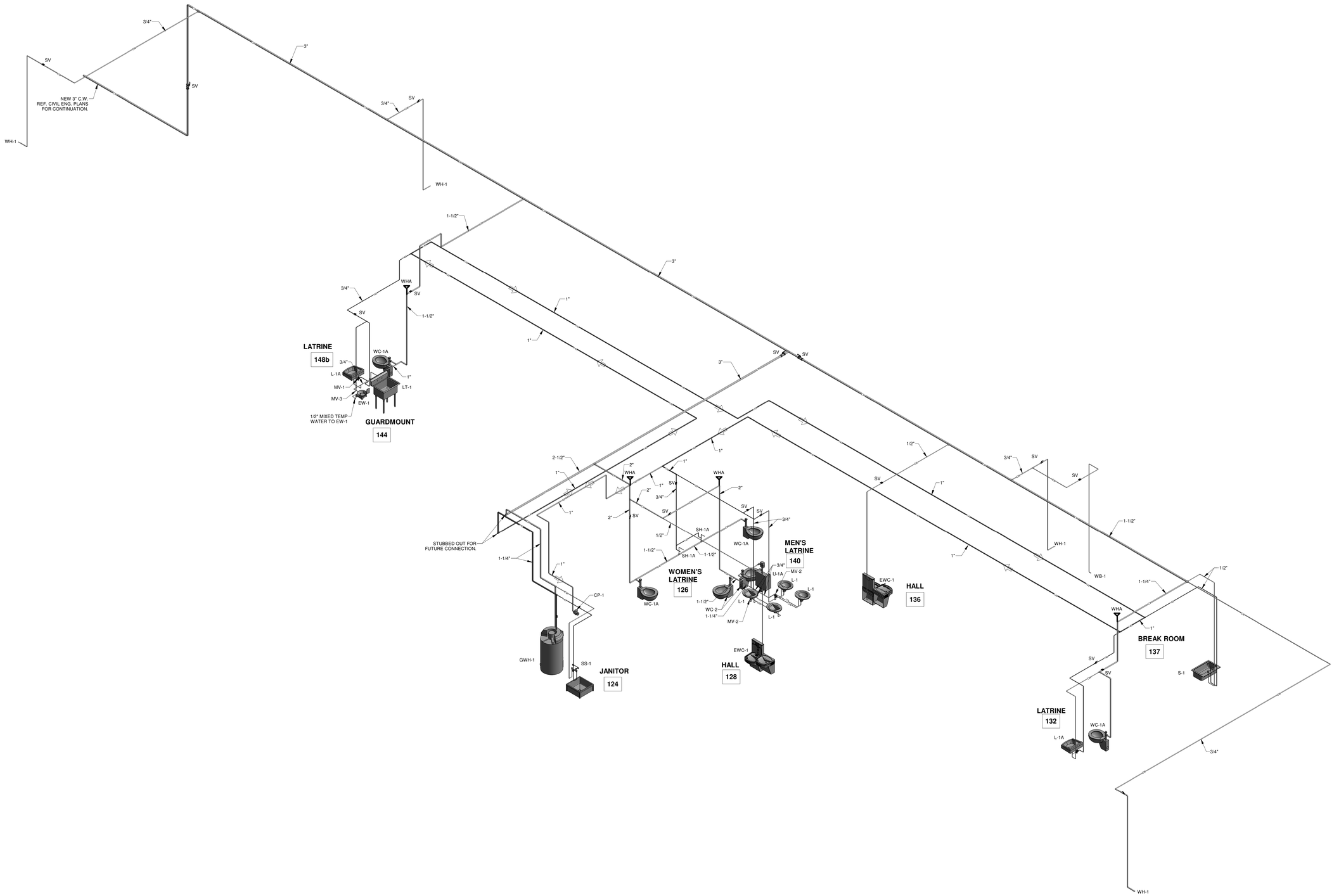

WR1 P3.1 P5.2

WATER PLUMBING RISER DIAGRAM (BASE BID)

NOT TO SCALE

WHORTON ENGINEERING, INC.

HVAC – PLUMBING – PROCESS CONTROL

RANDALL WHORTON, P.E.
PHONE: (256) 820-9897

25 SUMMERALL GATE ROAD
ANNISTON, ALABAMA 36205

WHORTON ENGINEERING PROJECT NO. 24135

S|S&L
ARCHITECTURE & INTERIOR DESIGN
113 South Court Street | Florence, AL 35630
Tel 334.303.5102 | WWW.SSLARCH.COM

Rev.	Description	Date

Job Number
12072

Date
JUNE 2024

Drawn By

Checked By

Project Title

A New Security Building

117th Air Refueling Wing
Birmingham, AL

Sheet Title
WATER PLUMBING
RISER DIAGRAM
(BASE BID)

Sheet Number

P5.2

STATE OF ALABAMA
No.14192
PROFESSIONAL
ENGINEER
RANDALL D WHORTON
06-20-2024

FIRE SERVICE RISER DIAGRAM

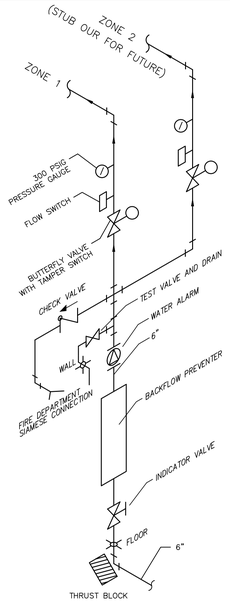

TYPICAL INSPECTOR'S TEST VALVE DETAIL

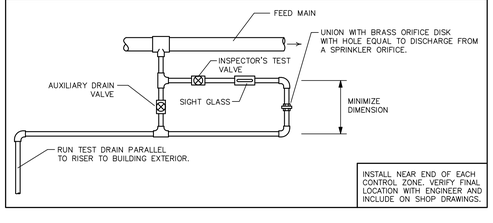

INSTALL NEAR END OF EACH CONTROL ZONE. VERIFY FINAL LOCATION WITH ENGINEER AND INCLUDE ON SHOP DRAWINGS.

TABLE 9-3 UFC 3-600-1

SPRINKLER DESIGN DEMAND AND MINIMUM K-FACTOR

HAZARD CLASSIFICATION		(GPM / FT^2) / FT^2 [MINIMUM K FACTOR]							
		CEILING HEIGHT UP TO 30 FT		CEILING HEIGHT > 30 - 45 FT		CEILING HEIGHT > 45 - 60 FT		CEILING HEIGHT > 60 - 100 FT	
		WET	DRY	WET	DRY	WET	DRY	WET	DRY
LIGHT	DESIGN	0.1 / 1500	0.1 / 1500	0.2 / 2500	0.2 / 3500	0.2 / 2500	0.2 / 3500	12 @ 7 PSI	NA
	K-FACTOR	5.6	5.6	11.2	11.2	11.2	11.2	25.2	NA
ORDINARY	DESIGN	0.2 / 2500	0.2 / 3500	0.2 / 2500	0.2 / 3500	0.2 / 2500	0.2 / 3500	12 @ 7 PSI	NA
	K-FACTOR	8.0	8.0	11.2	11.2	11.2	11.2	25.2	NA
EXTRA	DESIGN	0.3 / 2500	0.3 / 3500	0.3 / 3600	0.3 / 4600	0.5 / 3000	0.5 / 4000	12 @ 7 PSI	NA
	K-FACTOR	11.2	11.2	11.2	11.2	11.2	11.2	25.2	NA

NOTE: FOR CEILING HEIGHTS > 60 FEET, THE DESIGN DEMAND IS BASED ON THE NUMBER OF SPRINKLERS AT AN END SPRINKLER PRESSURE (I.E. 12 SPRINKLERS AT 7 PSI END PRESSURE).

TABLE 9-4 UFC 3-600-1

HOSE STREAM DEMAND AND DURATION

HAZARD CATEGORY	HOSE DEMAND , GPM		DURATION (MIN)
	CEILINGS 60 FT OR LESS	CEILINGS GREATER THAN 60 FT	
LIGHT	250	500	60
ORDINARY	250	500	60
EXTRA	500	500	90

FIRE SPRINKLER ZONE LEGEND

ZONE NO.	AREA DISCRIPTION	SYSTEM TYPE	ZONE COVERAGE (SQFT)	ZONE HATCH PATTERN
1	LEVEL ONE & ATTIC - BASE BID	WET PIPE	19,950	

FIRE SPRINKLER LEGEND

—— FP ——	NEW FIRE PROTECTION PIPING
FDV	FIRE DEPARTMENT VALVE
—— CV ——	CONTROL VALVE
————	SPRINKLER ZONE DIVISION

FIRE SPRINKLER DRAWING INDEX

SHEET NO.	SHEET TITLE
SP1.1	FIRE SPRINKLER PLUMBING LEGEND, NOTES AND DETAILS
SP2.1	FIRE SPRINKLER PLUMBING PLANS

FIRE SPRINKLER SYSTEM NOTES

1. THE FIRE PROTECTION SYSTEM IS SHOWN IN SCHEMATIC FORM ONLY. THE SUCCESSFUL FIRE PROTECTION VENDOR SHALL LOCATE AND SIZE ALL SPRINKLER HEADS, FIRE DEPARTMENT CONNECTIONS, STANDPIPE SYSTEMS, PIPING, ETC. IN COMPLETE ACCORDANCE WITH NFPA 13 AND THE 2015 INTERNATIONAL BUILDING CODE AND LOCAL REQUIREMENTS.
2. SYSTEM DESIGN TO BE IN ACCORDANCE WITH WRITTEN SPECIFICATIONS. ALL HYDRAULIC CALCULATIONS SHALL BE SUBMITTED TO ENGINEER FOR REVIEW AND APPROVAL.
3. ALL PIPING SHALL BE INSTALLED IN SUCH A MANNER AS TO AVOID PLUMBING AND HVAC INSTALLATIONS. FAILURE TO COORDINATE WORK WILL RESULT IN REWORK AT CONTRACTOR'S EXPENSE. MAINTAIN MINIMUM STAIR WELL EGRESS CLEARANCE.
4. RUN ALL PIPING ABOVE 12'-0" AFF AND IN WEB OF TRUSS UP TO CONNECTION TO HEAD. PROVIDE FLEXIBLE HOSE CONNECTION TO HEAD. DO NOT EXCEED MAXIMUM LENGTH OF FLEXIBLE HOSE PER ALL APPLICABLE CODES/STANDARDS.
5. INSTALL ALL EXPOSED PIPING AS HIGH AS POSSIBLE.
6. ROUTE ALL EXPOSED PIPING IN CHASES WHERE POSSIBLE.
7. COORDINATE ALL WORK WITH ARCHITECTURAL, STRUCTURAL, HVAC AND ELECTRICAL TRADES, PLUMBING. PIPE ROUTING SHOWN IS DIAGRAMMATIC. PROVIDE ALL OFFSETS, ETC., TO AVOID INTERFERENCES WITH EQUIPMENT, PIPING, DUCTWORK, LIGHTS, CONDUIT, ETC..
8. COORDINATE ALL FLOOR PENETRATIONS WITH STRUCTURAL DRAWINGS. SET SLEEVES IN FLOORS AND WALLS AND ATTACHMENTS FOR HANGERS AS CONSTRUCTION PROGRESSES. ALL PENETRATIONS MUST BE SEALED AND HELD AS TIGHT TO COLUMNS OR WALLS AS POSSIBLE.
9. ALL PIPING SHALL BE CONCEALED INSIDE WALLS AND IN PIPE CHASES OR ABOVE CEILINGS. HOLD ALL PIPING ABOVE CEILING AS HIGH AS POSSIBLE.
10. ALL STRUCTURAL PENETRATIONS (SLEEVES, BLOCKOUTS, ETC.) ARE TO BE LOCATED AND COORDINATED IN THE FIELD BY THE CONTRACTOR IN RELATION TO THE REQUIREMENTS OF FINAL EQUIPMENT AND FIXTURES SELECTED.
11. FIELD VERIFY EXACT SIZE, MATERIAL, AND LOCATION OF ALL EXISTING UTILITIES BEFORE BEGINNING WORK.
12. ALL WET PIPING TO BE ROUTED BELOW CEILING INSULATION.
13. SPRINKLER SYSTEMS MUST BE DESIGNED USING THE AREA/DENSITY METHOD OF NFPA 13, EXCEPT THAT THE DESIGN DENSITY, DESIGN AREA, HOSE STREAM ALLOWANCE AND DURATION OF SUPPLY REQUIREMENTS MUST BE IN ACCORDANCE WITH TABLES 9–3 & 9–4 UFC 3–600–1.
14. DESIGN AREAS IN TABLES 9–3 & 9–4 OF UFC 3–600–1 MUST BE INCREASED BY 30 PERCENT FOR SLOPED CEILINGS THAT EXCEED A PITCH OF ONE IN SIX, AS REQUIRED BY NFPA 13.
15. WHEN NRTL LISTED QUICK–RESPONSE SPRINKLERS ARE USED THROUGHOUT THE SYSTEM, THE DESIGN AREA IN TABLES 9–3 & 9–4 OF UFC 3–600–1 MAY BE REDUCED BY THE PERCENTAGE ALLOWED BY NFPA 13 FOR USING QUICK RESPONSE SPRINKLERS WITHOUT REVISING THE DENSITY IN TABLES 9–3 & 9–4.
16. COVERAGE PER SPRINKLER MUST BE IN ACCORDANCE WITH NFPA 13, EXCEPT THAT IT MUST NOT EXCEED 225 SQFT FOR LIGHT HAZARD OCCUPANCIES OR 130 SQFT FOR ORDINARY HAZARD.
17. PROVIDE TEST CONNECTION DOWNSTREAM OF ALL BACKFLOW PREVENTION VALVES FOR FLOW TESTS AT SYSTEM DEMAND.
18. COORDINATE ALL FIRE PROTECTION WORK WITH FIRE ALARM SUBCONTRACTOR.

QFPE REQUIREMENTS

1. THE CONTRACTOR SHALL EMPLOY A QUALIFIED FIRE PROTECTION ENGINEER (QFPE) MEETING THE REQUIREMENTS OF UFC 3–600–01.
2. THE QFPE SHALL REVIEW, SIGN, AND CERTIFY ALL FIRE PROTECTION AND LIFE SAFETY SYSTEMS INCLUDING, BUT NOT LIMITED TO, FIRE ALARM, MASS NOTIFICATION, AND SPRINKLER SYSTEMS INCLUDED WITHIN THE PROPOSED PROJECT.
3. ALL SHOP DRAWINGS/ CALCULATIONS/ MATERIAL SUBMITTALS FOR APPLICABLE LIFE SAFETY SYSTEMS MUST BE REVIEWED AND STAMPED BY THE CONTRACTOR QFPE IN ACCORDANCE WITH SECTION 9–6.3 OF UFC 3–600–01.
4. WATERFLOW TESTING SHALL BE PERFORMED UNDER THE DIRECTION OF THE CONTRACTOR'S QFPE IN ACCORDANCE WITH SECTION 9–6.4 OF UFC 3–600–01. WATERFLOW TESTING SHALL BE PERFORMED BY THE CONTRACTOR IN ORDER TO DEVELOPE REQUIRED HYDRAULIC CALCULATIONS. USE OF WATERFLOW TESTING PERFORMED BY THE ARCHITECT DURING DESIGN CANNOT BE UTILIZED BY THE CONTRACTOR FOR PREPARATION OF PROJECT SUBMITTALS.
5. DURING CONSTRUCTION THE CONTRACTOR'S QFPE MUST VISIT THE SITE IN INTERVALS/QUATITIES REQUIRED TO CERTIFY THAT THE SYSTEM HAS BEEN INSTALLED IN ACCORDANCE WITH THE PROJECT REQUIREMENTS. AT A MINIMUM, THE QFPE SHALL ATTEND/WITNESS THE ABOVE CEILING INSPECTION AND ATTEND/WITNESS FINAL ACCEPTANCE TESTING FOR AL FIRE PROTECTION AND LIFE SAFETY SYSTEMS. ADDITIONAL SITE INSPECTIONS ARE AT THE DISCRETION OF THE CONTRACTOR'S QFPE. THE CONTRACTOR'S QFPE SHALL CERTIFY, IN WRITINGS, THAT THE SYSTEM HAS BEEN INSTALLED IN ACCORDANCE WITH PROJECT REQUIREMENTS. THE CONTRACTOR'S QFPR CERTIFICATION SHALL BE IN WRITING, ON COMPANY LETTERHEAD, AND INCLUDE THE QFPE'S REGISTRATION STAMP.

FIRE SPRINKLER PLUMBING LEGEND, NOTES, AND DETAILS

NOT TO SCALE

WHORTON ENGINEERING, INC.
HVAC – PLUMBING – PROCESS CONTROL
RANDALL WHORTON, P.E.
PHONE: (256) 820–9897
25 SUMMERALL GATE ROAD
ANNISTON, ALABAMA 36205

WHORTON ENGINEERING PROJECT NO. 24135

S|S&L
ARCHITECTURE & INTERIOR DESIGN
1115 Second Avenue | Birmingham, AL 35203
Tel. 334.365.5162 | WWW.SSLARCH.COM

Rev.	Description	Date

Job Number: 12072
Date: JUNE 2024
Drawn By: TMW
Checked By: RDW
Project Title

New Security Building
117th Air Refueling Wing
Birmingham, AL

Sheet Title: FIRE SPRINKLER PLUMBING LEGEND, NOTES, AND DETAILS

Sheet Number: SP1.1

06–20–2024

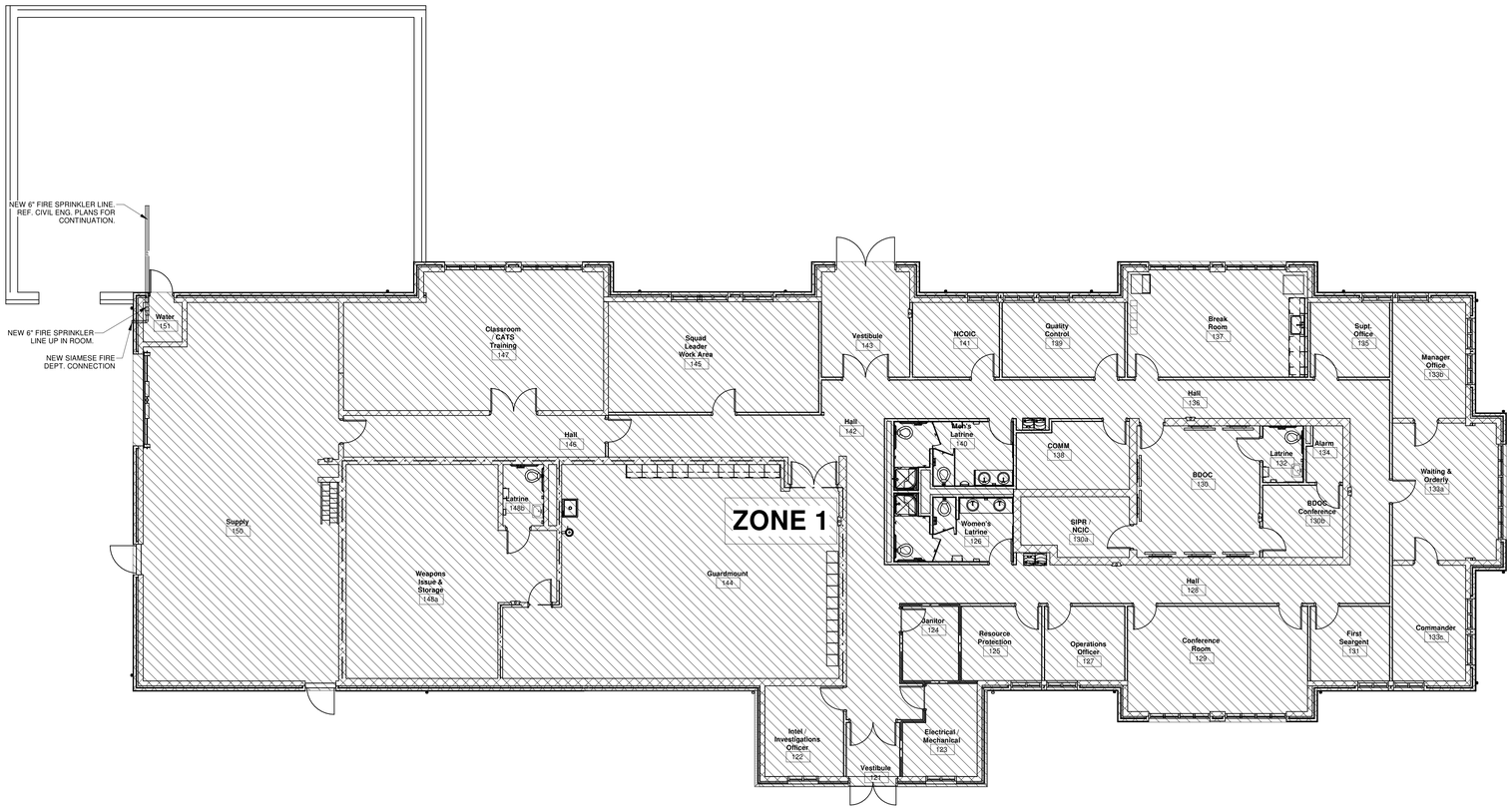

FIRST FLOOR FIRE SPRINKLER PLUMBING PLAN (BASE BID)

1/8" = 1'-0"

0' 4' 8' 16'

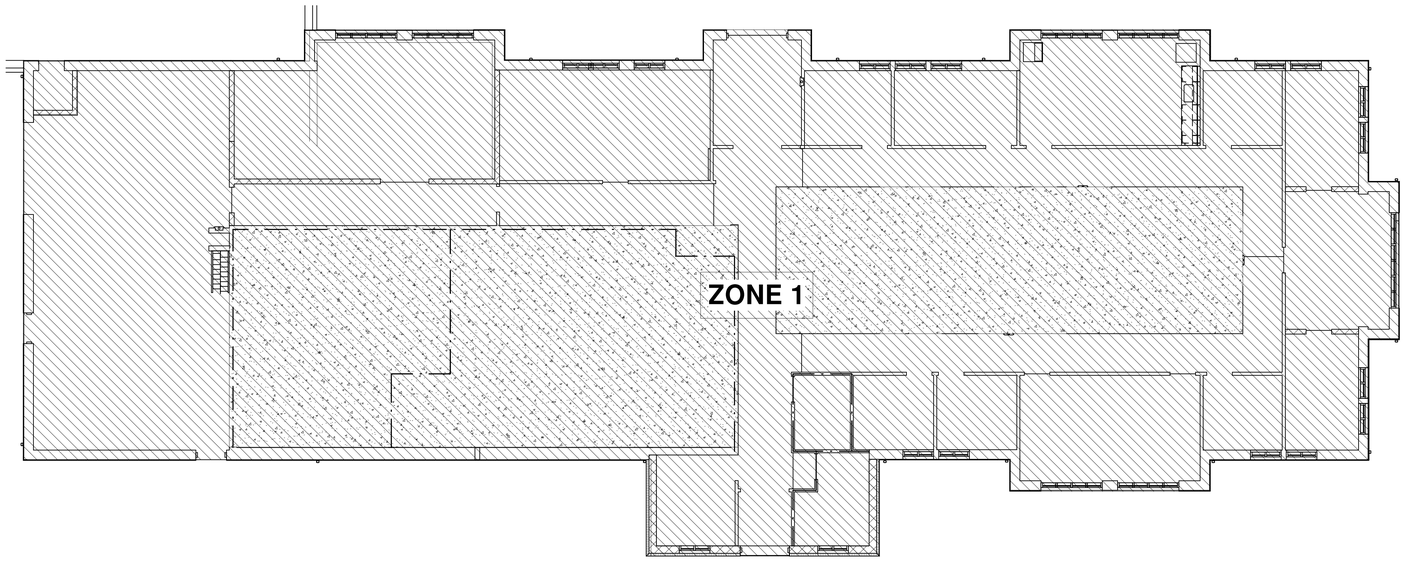

ATTIC FIRE SPRINKLER PLUMBING PLAN (BASE BID)

1/8" = 1'-0"

0' 4' 8' 16'

WHORTON ENGINEERING, INC.

HVAC – PLUMBING – PROCESS CONTROL

RANDALL WHORTON, P.E.
PHONE: (256) 820-9897

25 SUMMERALL GATE ROAD
ANNISTON, ALABAMA 36205

WHORTON ENGINEERING PROJECT NO. 24135

S|S&L

ARCHITECTURE & INTERIOR DESIGN
113 South Court Street, Florence, AL 35630
Tel. 334.765.5162 | WWW.SSLARCH.COM

Rev.	Description	Date

Job Number
12072

Date
JUNE 2024

Drawn By

Checked By

Project Title

A New Security Building

117th Air Refueling Wing
Birmingham, AL

Sheet Title
FIRE SPRINKLER PLUMBING PLANS (BASE BID)

Sheet Number

SP2.1

STATE OF ALABAMA
RANDALL WHORTON
No.14192
PROFESSIONAL ENGINEER

06-20-2024

ELECTRICAL SYMBOLS

Symbol	Description
	CEILING OUTLET – RECESSED LED FIXTURE. HATCHING INDICATES FIXTURE WITH EMERGENCY BATTERY PACK
	CEILING OUTLET – LED DOWNLIGHT.
	CEILING OUTLET – SURFACE LED FIXTURE.
	CEILING OUTLET – LED FIXTURE.
	WALL OUTLET – LED BRACKET TYPE.
	WALL OUTLET – LED BRACKET TYPE.
	WALL OUTLET – EMERGENCY FIXTURE.
	WALL OUTLET – DUPLEX OUTLET, 20A, 125V, GROUNDED, HUBBELL #5362 – GREY. ("PL" INDICATES PLUGLOAD CONTROLLED RECEPTACLE THAT SHALL BE HUBBELL 5362C1 WHERE 1/2 OF EACH DEVICE IS CONTROLLED.) ("PL2" INDICATES ENTIRE DEVICE IS CONTROLLED.)
	WALL OUTLET – DOUBLE DUPLEX OUTLET, 20A, 125V, GROUNDED HUBBELL #5362 – GREY.
	WALL OUTLET – GFCI DOUBLE DUPLEX OUTLET, 20A, 125V, GROUNDED HUBBELL #5362 – GREY.
	WALL OUTLET – GFCI DUPLEX OUTLET, 20A, 125V, GROUNDED, WEATHERPROOF, HUBBELL #GF–5362–GY – GREY WITH #S–26 PLATE. ("WP" DENOTES EXTRA DUTY METAL IN–USE WEATHERPROOF COVER)
	WALL OUTLET – DUPLEX OUTLET, MOUNTED 6" ABOVE COUNTER.
	WALL OUTLET – DOUBLE DUPLEX, MOUNTED 6" ABOVE COUNTER.
	WALL OUTLET – GFCI DUPLEX OUTLET, MOUNTED 6" ABOVE COUNTER.
	WALL OUTLET – SINGLE OUTLET, 20A, 250V, 3W. VERIFY NEMA CONFIGURATION WITH ACTUAL EQUIPMENT.
A2	FLOOR OUTLET – COMBINATION POWER/COMMUNICATIONS OUTLET. WIREMOLD #RPNFB WITH #RPAV3CTCBS DUAL SERVICE BRASS COVER PLATE OR EQUAL WITH ALL NECESSARY HARDWARE. VERIFY LOCATION WITH ARCHITECT. CONTRACTOR SHALL STUB (2)–2" C. FROM FLOOR OUTLET TO THE CABLE TRAY FOR TELECOMMUNICATIONS CABLES. CONTRACTOR SHALL VERIFY FLOOR FINISH AND PROVIDE PROPER FLOOR OUTLET COVER FOR THE FLOOR FINISH BEING PROVIDED.
•	FLOOR OUTLET – CONDUIT STUB UP.
J	CEILING OUTLET – JUNCTION BOX.
J	WALL OUTLET – JUNCTION BOX WITH FLEXIBLE CONNECTION TO EQUIPMENT.("HD" INDICATES HAND DRYER POWER)
$	SWITCH OUTLET – AC TYPE, SINGLE POLE, 20A, 120/277V, HUBBELL #1221 – GREY.("N" DENOTES NARROW)
^{2}	SWITCH OUTLET – AC TYPE, TWO POLE, 20A, 120/277V, HUBBELL #1222 – GREY.
^{3}	SWITCH OUTLET – AC TYPE, THREE WAY, 20A, 120/277V, HUBBELL #1223 – GREY.
^{4}	SWITCH OUTLET – AC TYPE, FOUR WAY, 20A, 120/277V, HUBBELL #1224 – GREY.
$M	SWITCH MANUAL MOTOR STARTER, SINGLE POLE WITH OVERLOAD PROTECTION.
$LVDX	SWITCH OUTLET – LOW VOLTAGE DIMMER SWITCH. nLIGHT RPODU–DX–WH–G2 OR EQUAL
$LV1N	SWITCH OUTLET – ON/OFF LOW VOLTAGE SWITCH. nLIGHT RPODU–WH–G2 OR EQUAL.
$LV4S	SWITCH OUTLET – FOUR SCENE LOW VOLTAGE SWITCH WITH DIMMING. nLIGHT RPODU–4S–DX–WH–G2 OR EQUAL.
S1	CEILING SENSOR – DUAL TECHNOLOGY CEILING SENSOR. nLIGHT RCMS–PS 150–PDT OR EQUAL.
	LIGHTING PANEL – SEE SPECIFICATIONS AND SCHEDULE.
	POWER PANELS – SEE SPECIFICATIONS AND SCHEDULE.
	BRANCH CIRCUIT CONCEALED IN WALL OR CEILING.
	BRANCH CIRCUIT CONCEALED IN FLOOR OR GROUND.
H	HDMI CABLE IN 3/4"C. FROM TV TO AV BOX OR FLOOR OUTLET AS SHOWN ON THE PLANS.
	HOMERUN TO PANELBOARD – ANY CIRCUIT WITHOUT FURTHER DESIGNATION 2 # 12 & 1 # 12(G) – 3/4" CONDUIT. 3 # 12 & 1 # 12(G) – 3/4" CONDUIT. 4 # 12 & 1 # 12(G) – 3/4" CONDUIT.
E	EMPTY CONDUIT – (1)–1".
	BRANCH CIRCUIT EXPOSED.
LV	LOW VOLTAGE WIRING.
∘	CONDUIT RUN DOWN WALLS, CONCEALED
•	CONDUIT RUN UP WALLS, CONCEALED
U.O.N.	UNLESS OTHERWISE NOTED.
5	MOTOR SHOWN 5hp (TYPICAL) OR 40 A 40 AMPS (TYPICAL).
f	EXHAUST FAN MOTOR – FRACTIONAL HORSEPOWER.
	MAGNETIC MOTOR STARTER.
	NON–FUSED DISCONNECT SWITCH. (RT – RAINTIGHT).
	FUSED DISCONNECT SWITCH. (RT – RAINTIGHT).
E.X.C.	INDICATES EXISTING CONDUIT AS SHOWN ON THE PLANS.
T.B.B.	TELEPHONE BACKBOARD – 4' X 8' X 3/4" – 2 COATS OF GREY ENAMEL BOTH SIDES. COVER ALL WALLS IN TELECOMMUNICATIONS ROOM. (OR AS NOTED).
T	THERMOSTAT – WALL OUTLET 54" AFF OR AS DIRECTED BY MECHANICAL DRAWINGS. RUN EMPTY 3/4" CONDUIT TO UNIT.

Symbol	Description
EX.	EXISTING ELECTRICAL EQUIPMENT TO REMAIN.
A.F.F.	ABOVE FINISHED FLOOR.
A.F.G.	ABOVE FINISHED GRADE.
B.F.C.	BELOW FINISHED CEILING.
VER.	VERIFY LOCATION.
N.E.C.	NATIONAL ELECTRICAL CODE.
NL	INDICATES UNSWITCHED NIGHTLIGHT.
	FIRE ALARM – SMOKE DETECTOR – SEE SPEC.
	FIRE ALARM – DUCT DETECTOR – SEE SPEC.
	FIRE ALARM – MAGNETIC DOOR HOLDER – SEE SPEC.
H	FIRE ALARM – HEAT DETECTOR – SEE SPEC.
F	FIRE ALARM – MANUAL PULL STATION – SEE SPEC.
S	FIRE ALARM/MASS NOTIFICATION – CEILING MOUNTED SPEAKER – SEE SPEC.("WP" INDICATES WEATHERPROOF)
S	FIRE ALARM/MASS NOTIFICATION – WALL MOUNTED SPEAKER – SEE SPEC.("WP" INDICATES WEATHERPROOF)
F	FIRE ALARM – CLEAR STROBE LIGHT – SEE SPEC.
M	MASS NOTIFICATION – BLUE STROBE – SEE SPEC.
F	FIRE ALARM/MASS NOTIFICATION – CEILING MOUNTED CLEAR STROBE LIGHT – SEE SPEC.("WP" INDICATES WEATHERPROOF)
M	FIRE ALARM/MASS NOTIFICATION – CEILING MOUNTED BLUE STROBE LIGHT – SEE SPEC.("WP" INDICATES WEATHERPROOF)
FS	FIRE ALARM – SPRINKLER FLOW SWITCH CONNECTION.
TS	FIRE ALARM – SPRINKLER TAMPER SWITCH CONNECTION.
FACP	FIRE ALARM CONTROL PANEL/MASS NOTIFICATION – SEE SPEC.
LOC	FIRE ALARM/MASS NOTIFICATION – LOCAL OPERATING CONSOLE – SEE SPEC.
▼	TELEPHONE OUTLET – 1" CONDUIT TO CABLE TRAY AND BONDED TO CABLE TRAY.("W" INDICATES WALL MOUNTED AT 54" AFF.) INSTALL PLENUM RATED CABLES AS INDICATED.
▽	DATA OUTLET – 1" CONDUIT TO CABLE TRAY AND BONDED TO CABLE TRAY. INSTALL PLENUM RATED CABLES AS INDICATED.
	DATA/TELEPHONE OUTLET – 1" CONDUIT TO CABLE TRAY AND BONDED TO CABLE TRAY. INSTALL PLENUM RATED CABLES AS INDICATED.
	DATA/COAX OUTLET – 1" CONDUIT TO CABLE TRAY AND BONDED TO CABLE TRAY. INSTALL PLENUM RATED CABLES AS INDICATED.
	DATA OUTLET – SAME AS ABOVE EXCEPT INSTALL 6" ABOVE COUNTER.
	DATA/TELEPHONE OUTLET – SAME AS ABOVE EXCEPT INSTALL 6" ABOVE COUNTER.
TV	CATV OUTLET – 3/4" CONDUIT TO ABOVE LAY–IN CEILING. INSTALL RG6 CABLE FROM OUTLET TO TBB–1. INSTALL CATV FACEPLATE AND TERMINATE. PROVIDE AND INSTALL BLONDER TONGUE AMPS AND SPLITTERS AS NECESSARY. PROVIDE AND INSTALL AN HDMI CABLE FROM THE AV OUTLET TO THE TV OUTLET. VERIFY HEIGHT OF ALL TV'S.
AV	CATV OUTLET – 3/4" CONDUIT WITH HDMI CABLE ROUTED FROM AV BOX OR FLOOR BOX TO THE TV OUTLET AS SHOWN ON THE PLANS. COORDINATE ALL CABLES, OUTLETS, CONNECTIONS WITH OWNER PRIOR TO SUBMITTING EQUIPMENT.(VER. HT. AND LOCATION)
S	PAGING SYSTEM – CEILING MOUNTED SPEAKER. CLARITY PTEC S–525. "SM" INDICATES SURFACE MOUNT ON THE BOTTOM OF TRUSS. COORDINATE CABLING WITH OWNER. SPEAKER CABLING SHALL BE ROUTED TO SSA LOCATION IN TELECOM 138. COIL UP 20' OF SLACK FOR OWNER TO TERMINATE. COORDINATE MODEL WITH OWNER TO ENSURE COMPATIBILITY WITH OWNER'S SYSTEM.
S	PAGING SYSTEM – WALL MOUNTED SPEAKER. CLARITY PTEC S–525. COORDINATE CABLING WITH OWNER. SPEAKER CABLING SHALL BE ROUTED TO SSA LOCATION IN TELECOM 138. COIL UP 20' OF SLACK FOR OWNER TO TERMINATE. COORDINATE MODEL WITH OWNER TO ENSURE COMPATIBILITY WITH OWNER'S SYSTEM.
H	PAGING SYSTEM – HORN/SPEAKER. CLARITY SX15–T–GY.
VC	PAGING OUTLET – VOLUME CONTROL. COORDINATE MODEL WITH OWNER TO ENSURE COMPATIBILITY WITH OWNER'S SYSTEM.
IDS	INTRUSION DETECTION SYSTEM. PROVIDE AND INSTALL AN IDS SYSTEM BY ADVANTOR FOR WEAPONS STORAGE. VERIFY ALL CONDUIT AND POWER REQUIREMENTS WITH ADVANTOR. ALL ADVANTOR SYSTEMS SHALL BE PROVIDED AND INSTALLED AS PART OF THIS CONTRACT.
PIR	IDS SYSTEM. PASSIVE INFRARED MOTION SENSOR BY ADVANTOR. COORDINATE REQUIREMENTS WITH ADVANTOR SYSTEMS CORPORATION. ALL ADVANTOR SYSTEMS SHALL BE PROVIDED AND INSTALLED AS PART OF THIS CONTRACT.
BMS	IDS SYSTEM. BALANCED MAGNETIC SWITCH BY ADVANTOR. COORDINATE REQUIREMENTS WITH ADVANTOR SYSTEMS CORPORATION. ALL ADVANTOR SYSTEMS SHALL BE PROVIDED AND INSTALLED AS PART OF THIS CONTRACT.
ITK	IDS SYSTEM. KEYPAD BY ADVANTOR. COORDINATE REQUIREMENTS WITH ADVANTOR SYSTEMS CORPORATION. ALL ADVANTOR SYSTEMS SHALL BE PROVIDED AND INSTALLED AS PART OF THIS CONTRACT.
DUR	IDS SYSTEM. DURRESS ALARM BY ADVANTOR. COORDINATE REQUIREMENTS WITH ADVANTOR SYSTEMS CORPORATION. ALL ADVANTOR SYSTEMS SHALL BE PROVIDED AND INSTALLED AS PART OF THIS CONTRACT.
CR	CARD READER. PROVIDE JUNCTION BOX AND 3/4" CONDUIT STUBBED OUT ABOVE CEILING AS REQUIRED.

GENERAL NOTES

1. ALL ELECTRICAL WORK SHALL BE DONE IN ACCORDANCE WITH THE NATIONAL ELECTRICAL CODE AND LOCAL ORDINANCES. CONTRACTOR SHALL OBTAIN AND PAY FOR ALL NECESSARY PERMITS.
2. CONTRACTOR SHALL VISIT THE SITE AND FAMILIARIZE HIMSELF WITH ALL DETAILS OF THE WORK AND ALL EXISTING FIELD CONDITIONS.
3. CONTRACTOR SHALL PROVIDE A COMPLETE ELECTRICAL INSTALLATION INCLUDING ALL WORK CUSTOMARILY INCLUDED EVEN IF NOT SPECIFICALLY CALLED OUT.
4. THE ELECTRICAL CONTRACTOR SHALL CAREFULLY COORDINATE HIS WORK WITH OTHER CONTRACTORS THROUGH THE GENERAL CONTRACTOR FOR SPACE REQUIREMENTS, ETC.
5. CONTRACTOR SHALL VERIFY ALL MECHANICAL EQUIPMENT NAMEPLATE DATA BEFORE ANY WORK IS DONE AND MAKE ANY ADJUSTMENTS IN BREAKER AND WIRE SIZE AS MAY BE REQUIRED.
6. SHOULD THE CONTRACTOR FIND DISCREPANCIES OR OMISSIONS IN THE CONTRACT DOCUMENTS OR BE IN DOUBT AS TO INTENT, HE SHALL IMMEDIATELY OBTAIN CLARIFICATION FROM THE ARCHITECT OR ENGINEER.
7. THE ELECTRICAL DRAWINGS ARE SCHEMATIC AND ARE NOT INTENDED TO SHOW THE EXACT LOCATION OF CONDUIT, OUTLETS, ETC.. THE CONTRACTOR SHALL REFER TO ARCHITECTURAL, MECHANICAL AND PLUMBING DRAWINGS AND SHALL FIT HIS WORK TO CONFORM WITH THE BUILDING CONSTRUCTION AND WITH THE OTHER TRADES.
8. MOUNTING HEIGHTS OF ALL WALL OUTLETS SHALL BE AS FOLLOWS UNLESS OTHERWISE INDICATED:
   - WALL SWITCHES............................4'–0"
   - RECEPTACLES...............................1'–6"
   - FIRE ALARM PULL STATION...........4'–0"
   - FIRE ALARM HORN/STROBE...........6'–8"
   - TELEPHONE OUTLET.......................1'–6"
   - DATA OUTLET................................1'–6"
   - CATV OUTLET................................1'–6"
9. ELECTRICAL CONTRACTOR SHALL VERIFY EXACT HEIGHT OF ALL COUNTER TOPS AND BACKSPLASHES ON CASEWORK SHOP DRAWINGS AND CHANGE SPECIFIED MOUNTING HEIGHT OF WALL OUTLETS AS REQUIRED SO THAT BOTTOM OF OUTLET BOX IS 2" ABOVE TOP OF BACKSPLASH OR IF NO BACKSPLASH IS USED, 4" ABOVE COUNTERTOP.
10. ALL OUTLET BOXES MOUNTED BACK–TO–BACK IN WALLS SHALL HAVE FIREPROOF SOUND INSULATING MATERIAL INSTALLED BETWEEN THE BOXES TO PREVENT SOUND TRANSMISSION FROM ONE ROOM TO ANOTHER.
11. VERIFY ALL DOOR SWINGS WITH THE ARCHITECT BEFORE ROUGHING IN LIGHT SWITCHES.
12. CONTRACTOR SHALL CHECK ALL LIGHT FIXTURES FOR EXACT MOUNTING TYPE AND SPACE REQUIRED PRIOR TO ROUGH–IN.
13. BRANCH CIRCUITS SHALL BE #12 AWG AND 3/4" CONDUIT MINIMUM. CONDUCTORS SHALL BE 98% CONDUCTIVITY COPPER. SEE SPECIFICATIONS FOR INSULATION TYPE.
14. ALL CONDUITS CROSSING EXPANSION JOINTS SHALL HAVE EXPANSION TYPE FITTINGS.
15. VERIFY EXACT LOCATION OF ALL MOTORS AND EQUIPMENT BEFORE ROUGHING IN.
16. SUPPORT OF ALL LIGHTING FIXTURES SHALL BE THE RESPONSIBILITY OF THIS CONTRACTOR. SEE SPECIFICATIONS FOR SUPPORTING METHODS.
17. COORDINATE SERVICES WITH POWER AND COMMUNICATION COMPANIES. REMOVE OR RELOCATE ALL POWER AND COMMUNICATIONS CIRCUITS ABOVE OR BELOW GRADE THAT WOULD OBSTRUCT CONSTRUCTION OF THE PROJECT OR CONFLICT IN ANY MANNER WITH COMPLETION OF THE PROJECT OR ANY CODE PERTAINING THERETO. IF UTILITY COMPANY REQUIREMENTS ARE AT A VARIANCE WITH THESE DRAWINGS AND SPECIFICATIONS, THE CONTRACT PRICE SHALL INCLUDE THE ADDITIONAL COST.
18. THIS CONTRACTOR SHALL INSTALL EQUIPMENT GROUNDS THROUGHOUT THIS PROJECT, USING GREEN INSULATED CONDUCTORS. USE OF CONDUIT AS THE ONLY GROUND CONDUCTOR WILL NOT BE ALLOWED. SIZE GROUND CONDUCTORS PER N.E.C..
19. ALL UTILITY FEES ASSOCIATED WITH THIS PROJECT SHALL BE INCLUDED IN BID. IF THESE FEES CANNOT BE OBTAINED FROM THE UTILITY PRIOR TO BID, THE CONTRACTOR SHALL INFORM THE ENGINEER IMMEDIATELY.
20. CONTRACTOR SHALL FIELD MARK ALL ELECTRICAL EQUIPMENT WITH ARC–FLASH WARNING LABELS PER NEC 110.16.
21. CONTRACTOR SHALL PROVIDE RECORD DRAWINGS AND MANUALS THAT PROVIDE INSTRUCTION ABOUT OPERATION AND MAINTENANCE OF THE BUILDING ELECTRICAL DISTRIBUTION SYSTEM TO THE OWNER WITHIN 30 DAYS AFTER THE DATE OF SYSTEM ACCEPTANCE.
22. CONTRACTOR SHALL COORDINATE VOLTAGE AND PHASE OF EACH PIECE OF ELECTRICAL EQUIPMENT WITH THE ELECTRICAL CONTRACTOR PRIOR TO SUBMITTING AND ORDERING EQUIPMENT.
23. VERIFY EXACT LOCATION AND EXACT MOUNTING HEIGHT OF ALL ELECTRICAL EQUIPMENT AND ELECTRICAL CONNECTIONS WITH THE ARCHITECT AND THE OWNER PRIOR TO ROUGH–IN.(INCLUDING DEVICES FOR TV, PROJECTOR, PROJECTOR SCREEN AND SWITCH FOR PROJECTOR.)
24. CONTRACTOR SHALL INSTALL SURGE PROTECTION DEVICE ON THE FACP, EXTERIOR ANTENNAS, EXTERIOR FIRE ALARM HORN/STROBES, ETC.
25. CONTRACTOR SHALL TIE NEW FACP INTO EXISTING CENTRAL STATION WITH A MONACO TRANSCEIVER AS REQUIRED.

LIGHTING FIXTURE SCHEDULE

MARK	MANUFACTURER	CATALOG NO.	LAMPS			MOUNTING HEIGHT	TYPE MOUNTING	RECESS DEPTH	REMARKS
			NO.	WATTS	TYPE				
A10	LITHONIA	2BLT4-60L-ADP-120-EZ1-LP850-NLTAIR2-RIO-GMF	FURNISHED WITH FIXTURE			CEILING	RECESSED	2-3/8"	SEE NOTE 3
A11	LITHONIA	2BLT4-60L-ADP-120-EZ1-LP850-NLTAIR2-RIO-EL14L-GMF	FURNISHED WITH FIXTURE			CEILING	RECESSED	2-3/8"	SEE NOTE 3
A12	LITHONIA	2BLT4-48L-ADP-120-EZ1-LP850-NLTAIR2-RIO-GMF	FURNISHED WITH FIXTURE			CEILING	RECESSED	2-3/8"	SEE NOTE 3
A13	LITHONIA	2BLT4-48L-ADP-120-EZ1-LP850-NLTAIR2-RIO-EL14L-GMF	FURNISHED WITH FIXTURE			CEILING	RECESSED	2-3/8"	SEE NOTE 3
A18	LITHONIA	2BLT4-72L-ADP-120-EZ1-LP850-NLTAIR2-RIO-GMF	FURNISHED WITH FIXTURE			CEILING	RECESSED	2-3/8"	SEE NOTE 3
D12	LITHONIA	TZ1D-L96-10000LM-FST-MVOLT-80CRI-WH	FURNISHED WITH FIXTURE			+12' A.F.F.	PENDANT		SEE NOTES 3, 5 & 8
D13	LITHONIA	TZ1D-L96-10000LM-FST-MVOLT-80CRI-2E7W-WH	FURNISHED WITH FIXTURE			+12' A.F.F.	PENDANT		SEE NOTES 3, 5 & 8
D15	LITHONIA	ZL1D-L48-5000LM-FST-120-50K-80CRI-WH	FURNISHED WITH FIXTURE			+12' A.F.F.	PENDANT		SEE NOTES 3 & 8
D16	LITHONIA	ZL1D-L48-5000LM-FST-120-50K-80CRI-E7W-WH	FURNISHED WITH FIXTURE			+12' A.F.F.	PENDANT		SEE NOTES 3 & 8
D17	LITHONIA	TZ1D-L96-14000LM-FST-MVOLT-80CRI-WH	FURNISHED WITH FIXTURE			+20'-6' A.F.F.	PENDANT		SEE NOTES 3, 5 & 8
F2	JUNO	UPLD-30IN-SWW4-90CRI-WH	FURNISHED WITH FIXTURE			UNDER CABINET	SURFACE		SEE NOTES 3 & 8
F3	JUNO	UPLD-22IN-SWW4-90CRI-WH	FURNISHED WITH FIXTURE			UNDER CABINET	SURFACE		SEE NOTES 3 & 8
F5	ECLIPSE	AS-XL-HR(LED 20W)-5K-120-WH-FUS	FURNISHED WITH FIXTURE			ABOVE MIRROR	SURFACE		SEE NOTES 3 & 8
G6	LITHONIA	ICO-40/20-6AR-LSS-70D-120-EZ1-SF-TRW	FURNISHED WITH FIXTURE			CEILING	RECESSED	8-7/8"	SEE NOTES 3 & 8
G7	LITHONIA	ICO-40/20-6AR-LSS-70D-120-EZ1-SF-TRW-ELR	FURNISHED WITH FIXTURE			CEILING	RECESSED	8-7/8"	SEE NOTES 3 & 8
G8	LITHONIA	EVO6SH-50-10-DFF-SOL-120-EZ1-SF	FURNISHED WITH FIXTURE			CEILING	RECESSED	7-1/2"	SEE NOTES 3 & 8
L4	LITHONIA	WST-LED-P2-50K-VF-120-SF-E7W	FURNISHED WITH FIXTURE			+11' A.F.F.(UON)	SURFACE		SEE NOTES 3 & 4
L5	LITHONIA	WST-LED-P2-50K-VF-120-SF	FURNISHED WITH FIXTURE			+11' A.F.F.	SURFACE		SEE NOTES 3 & 4
P6	LITHONIA	DSX0-LED-P1-50K-TFTM-208-SPA-DF	FURNISHED WITH FIXTURE			+25' A.F.F.	SURFACE		SEE NOTES 1, 3 & 4
S	VISA LIGHITNG	OW5201-L40K(H)-MVOLT-BRNZ	FURNISHED WITH FIXTURE			+9' A.F.F.(UON)	SURFACE		SEE NOTES 3, 4 & 7
X	LITHONIA	LES-R-120-ELN	FURNISHED WITH FIXTURE			ABOVE DOOR/CEILING	SURFACE		SEE NOTE 3

NOTES:

1. PROVIDE WITH SSS-30-5G-DM19AS-DDB-BC POLE
2. NOT USED.
3. EQUAL FIXTURE BY COLUMBIA AND DAYBRITE WILL BE ACCEPTABLE.
4. VERIFY FINISH WITH ARCHITECT.
5. FIXTURE SHALL BE HUNG WITH AIRCRAFT CABLE AS REQUIRED.
6. ALL LIGHT FIXTURES SHALL CARRY A MINIMUM 10 YEAR MANUFACTURER'S WARRANTY.
7. PROVIDE FIXTURE WITH A 1400 LUMEN REMOTE EMERGENCY BATTERY PACK.
8. PROVIDE FIXTURE WITH A NLIGHT POWER PACK FOR WIRELESS CONTROL.

ALABAMA REGISTERED PROFESSIONAL ENGINEER No. 22753 STANLEY J. MCCARTER

6-19-24

McCARTER ENGINEERING
ELECTRICAL ENGINEERING CONSULTANTS
PHONE: (256) 240-7335
878 AVALON LANE
ANNISTON, AL 36207
M.E. JOB #2414

SS&L
ARCHITECTURE & INTERIOR DESIGN
Montgomery | Dothan | WWW.SSLARCH.COM
(M) 334. 263. 5162 | (D) 334. 791. 5248

Rev.	Description	Date

Job Number: 12072

Date: JUNE 2024

Drawn By: MWS

Checked By: SJM

Project Title: New Security Building, 117th Air Refueling Wing, Birmingham, AL

Sheet Title: SYMBOLS, NOTES AND LIGHTING FIXTURE SCHEDULE

Sheet Number: E1.1

STATE OF ALABAMA MONTGOMERY Jim H. Seay, Jr. 1846 Gregory A. O'Neal 6043 Wesley E. Osmer 6244 ALABAMA REGISTERED ARCHITECTS

DEMOLITION NOTES

1. DISCONNECT ELECTRICAL SYSTEMS IN WALLS, FLOORS, AND CEILINGS SCHEDULED FOR REMOVAL.
2. PROVIDE TEMPORARY WIRING AND CONNECTIONS TO MAINTAIN EXISTING SYSTEMS IN SERVICE DURING CONSTRUCTION.
3. REMOVE ELECTRICAL EQUIPMENT NOT REQUIRED TO REMAIN IN SERVICE. RECONNECT EXISTING CIRCUITS TO OTHER SOURCES OF SUPPLY.
4. REMOVE ABANDONED WIRING TO SOURCE OF SUPPLY.
5. WHEN A CIRCUIT IS INTERRUPTED BY REMOVAL OF A DEVICE OR FIXTURE FROM THAT CIRCUIT, INSTALL WIRE, CONDUIT, AND ACCESSORIES TO RESTORE SERVICE TO REMAINING DEVICES AND FIXTURES ON THAT CIRCUIT.
6. MAINTAIN ACCESS TO EXISTING ELECTRICAL INSTALLATIONS WHICH REMAIN ACTIVE.
7. REPAIR ADJACENT CONSTRUCTION AND FINISHES DAMAGED DURING DEMOLITION AND EXTENSION WORK.

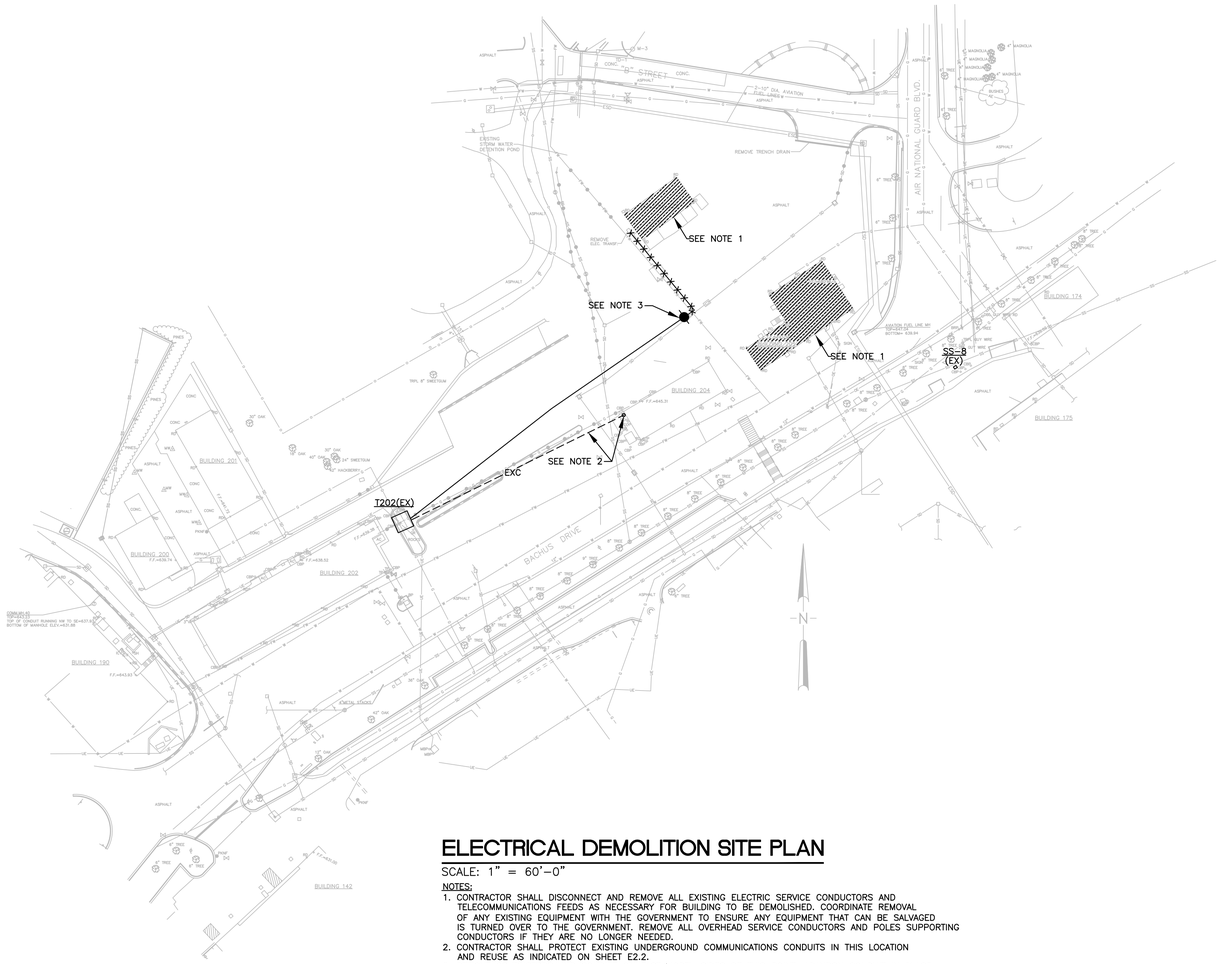

ELECTRICAL DEMOLITION SITE PLAN

SCALE: 1" = 60'-0"

NOTES:

1. CONTRACTOR SHALL DISCONNECT AND REMOVE ALL EXISTING ELECTRIC SERVICE CONDUCTORS AND TELECOMMUNICATIONS FEEDS AS NECESSARY FOR BUILDING TO BE DEMOLISHED. COORDINATE REMOVAL OF ANY EXISTING EQUIPMENT WITH THE GOVERNMENT TO ENSURE ANY EQUIPMENT THAT CAN BE SALVAGED IS TURNED OVER TO THE GOVERNMENT. REMOVE ALL OVERHEAD SERVICE CONDUCTORS AND POLES SUPPORTING CONDUCTORS IF THEY ARE NO LONGER NEEDED.
2. CONTRACTOR SHALL PROTECT EXISTING UNDERGROUND COMMUNICATIONS CONDUITS IN THIS LOCATION AND REUSE AS INDICATED ON SHEET E2.2.
3. REMOVE CONDUCTORS AND CONDUIT ON EAST/NORTH SIDES OF THIS POINT. ABANDON CONDUIT IN PLACE TO SOUTH/WEST OF THIS LINE. REMOVE CONDUCTORS ALL THE WAY BACK TO POINT OF ORIGN AT T202.

STATE OF ALABAMA REGISTERED PROFESSIONAL ENGINEER No. 22753 STANLEY J. McCARTER
6-19-24

McCARTER ENGINEERING
ELECTRICAL ENGINEERING CONSULTANTS
PHONE: (256) 240-7335
878 AVALON LANE
ANNISTON, AL 36207
M.E. JOB #2414

S|S&L
ARCHITECTURE & INTERIOR DESIGN
Montgomery | Dothan | Birmingham
(M) 334. 263. 5162 | (D) 334. 791. 5545
WWW.SSLCO.COM

Rev.	Description	Date

Job Number: 12072

Date: JUNE 2024

Drawn By: MWS

Checked By: SJM

Project Title: New Security Building, 117th Air Refueling Wing, Birmingham, AL

Sheet Title: ELECTRICAL DEMOLITION SITE PLAN

Sheet Number: E2.1

STATE OF ALABAMA MONTGOMERY REGISTERED ARCHITECTS
Jim H. Sorg, Jr. 1996
Gregory A. O'Neal 2005
Wesley S. Cleaver 2014

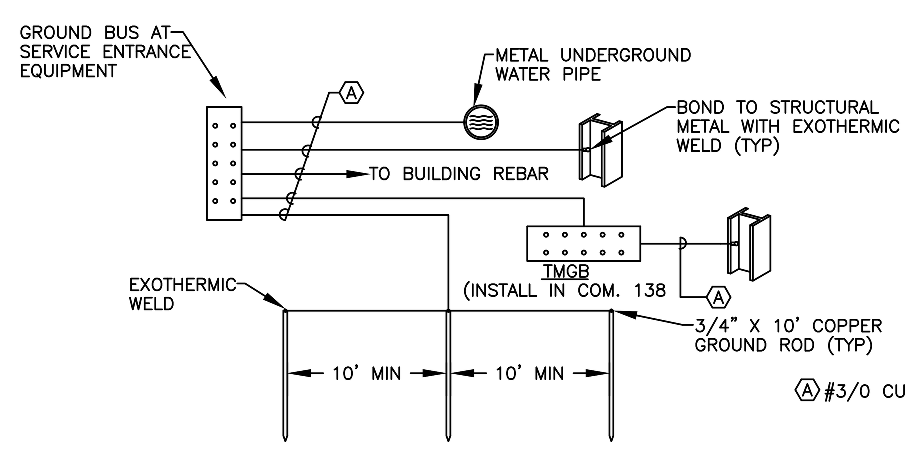

GROUNDING DETAIL

N.T.S.

NOTES:
1. ALL GROUNDING CONDUCTORS SHALL BE TERMINATED TO THE BUS BARS BY USING IRREVERSIBLE HIGH COMPRESSION OR PERMANENT EXOTHERMIC CONNECTIONS. HIGH COMPRESSION LUGS SHALL BE TWO HOLE TYPE.
2. ALL GROUNDING CONDUCTORS SHALL BE PERMANENTLY LABELED AT EACH END INDICATING WHERE GROUND GOES TO.
3. ALL RACKS AND METAL EQUIPMENT IN THE EF, TER, TR AND SIPRNET SHALL BE BONDED TO THE BUS BAR IN EACH SPACE BY TELCOMM CONTRACTOR.
4. GROUNDING SYSTEM SHALL MEET ANSI J-STD-607-A.
5. GROUND ALL FENCING PER SPECIFICATIONS AND BOND TO GROUNDING SYSTEM.
6. EACH TMGB SHALL BE COOPER B-LINE #SBTMGB12K
7. PROVIDE AND INSTALL A COMMUNICATIONS SURGE PROTECTOR AT EACH TMGB.

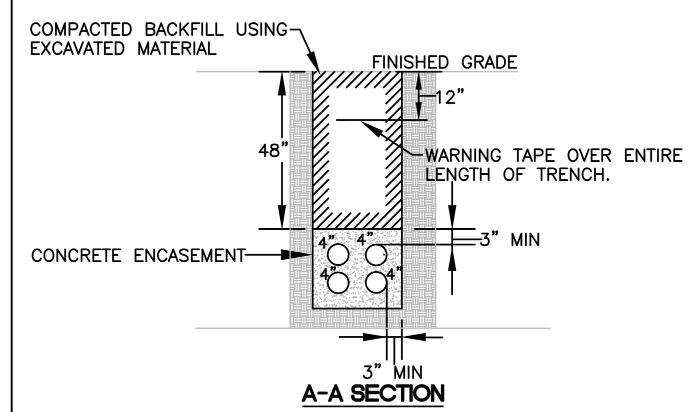

DUCT BANK SECTION

N.TS.

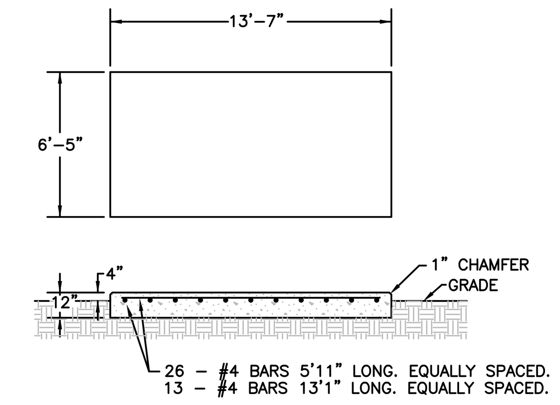

GENERATOR PAD DETAIL

N.T.S.

NOTES:
1. ALL ELECTRICAL CONDUITS AND GROUND ROD, SHALL BE ROUGHED IN PRIOR TO POURING PAD.
2. ANCHOR GENERATOR TO PAD IN ACCORDANCE WITH MANUFACTURER'S RECOMMENDATIONS.
3. COORDINATE SIZE OF PAD WITH ACTUAL OUTLINE OF GENERATOR PRIOR TO FORMING.

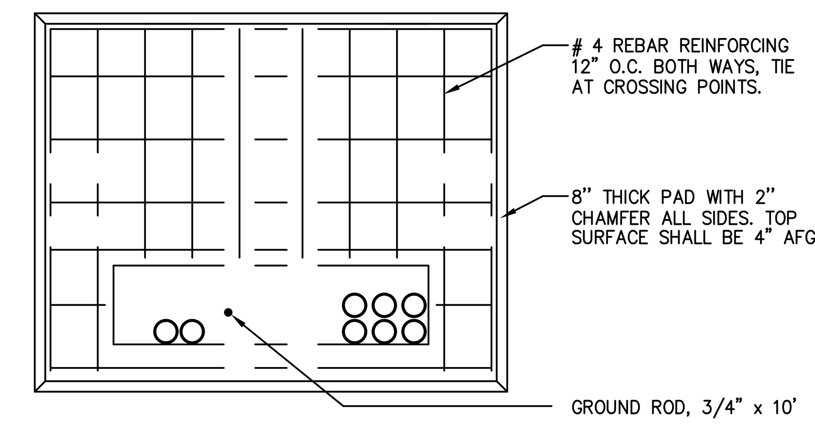

NOTES:
1. VERIFY PAD DIMENSIONS WITH MANUFACTURER'S SHOP DRAWING PRIOR TO CONSTRUCTION. CONCRETE PAD TO EXTEND 12" BEYOND TRANSFORMER ENCLOSURE AND COOLING FINS IN ALL DIRECTIONS.
2. FORM PAD ON A FIRM DRY GRAVEL BASE. BASE SHALL BE 6" MINIMUM COMPACTED GRAVEL ON UNDISTURBED SOIL. IN AREAS OF DISTURBED OR UNSUITABLE SOIL, PIER FOOTINGS SHALL BE REQUIRED.
3. CONCRETE SHALL HAVE A MINIMUM STRENGTH OF 3000 PSI IN 28 DAYS. MOIST CURE CONCRETE FOR 7 DAYS BEFORE SETTING TRANSFORMER.

TRANSFORMER PAD DETAIL

N.T.S.

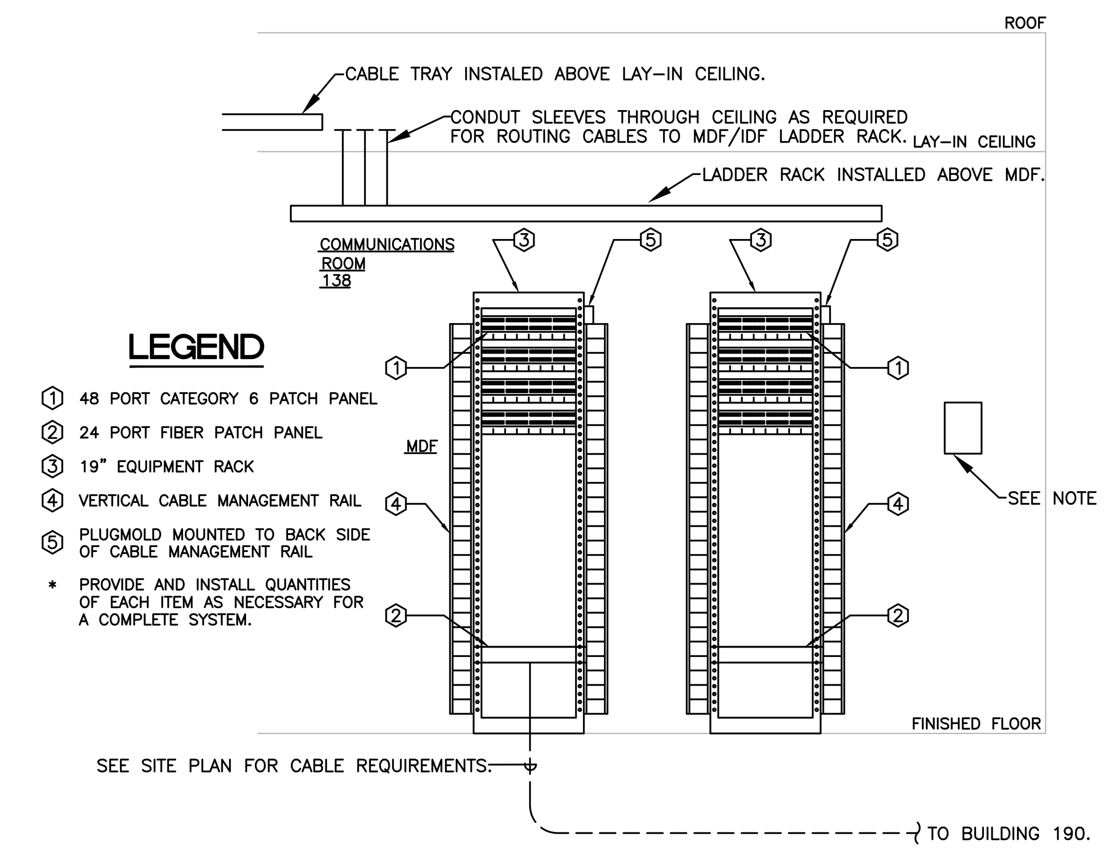

DATA SYSTEM RISER DIAGRAM

N.T.S. (SIMILAR FOR COMMUNICATIONS ROOM 138)

NOTES:
1. INSTALL PULL STRING IN ALL EMPTY CONDUIT.
2. CONTRACTOR SHALL PROVIDE AND INSTALL A UPS AT THE MDF AND IDF WITH A MINIMUM RUN TIME OF ONE HOUR.
3. CONTRACTOR SHALL PROVIDE AND INSTALL A BLONDER TONGUE RECEIVER AMP FOR FIBER TO COAX CONNECTIONS. CONTRACTOR SHALL PROVIDE AND INSTALL FOUR (4) SINGLE MODE FIBER OPTIC STRANDS FROM THE COMMUNICATIONS RACK TO THE AMP. MOUNT AMP TO BACKBOARD. FIBER CONNECTIONS SHALL BE SC TYPE FOR CATV SYSTEM.
4. 110 BLOCKS AS REQUIRED FOR COPPER TERMINATIONS.

NOTE:
ALL 120 VOLT CIRCUIT WIRE SIZES SHALL BE BASED UPON DISTANCE FROM PANELBOARD FEEDING THE CIRCUITS AS FOLLOWS AND THE CIRCUITS SHALL HAVE A 3% VOLTAGE DROP OR LESS:
LESS THAN 75 FEET.............#12 AWG
BETWEEN 76' AND 125'.......#10 AWG
BETWEEN 126' AND 190'....#8 AWG

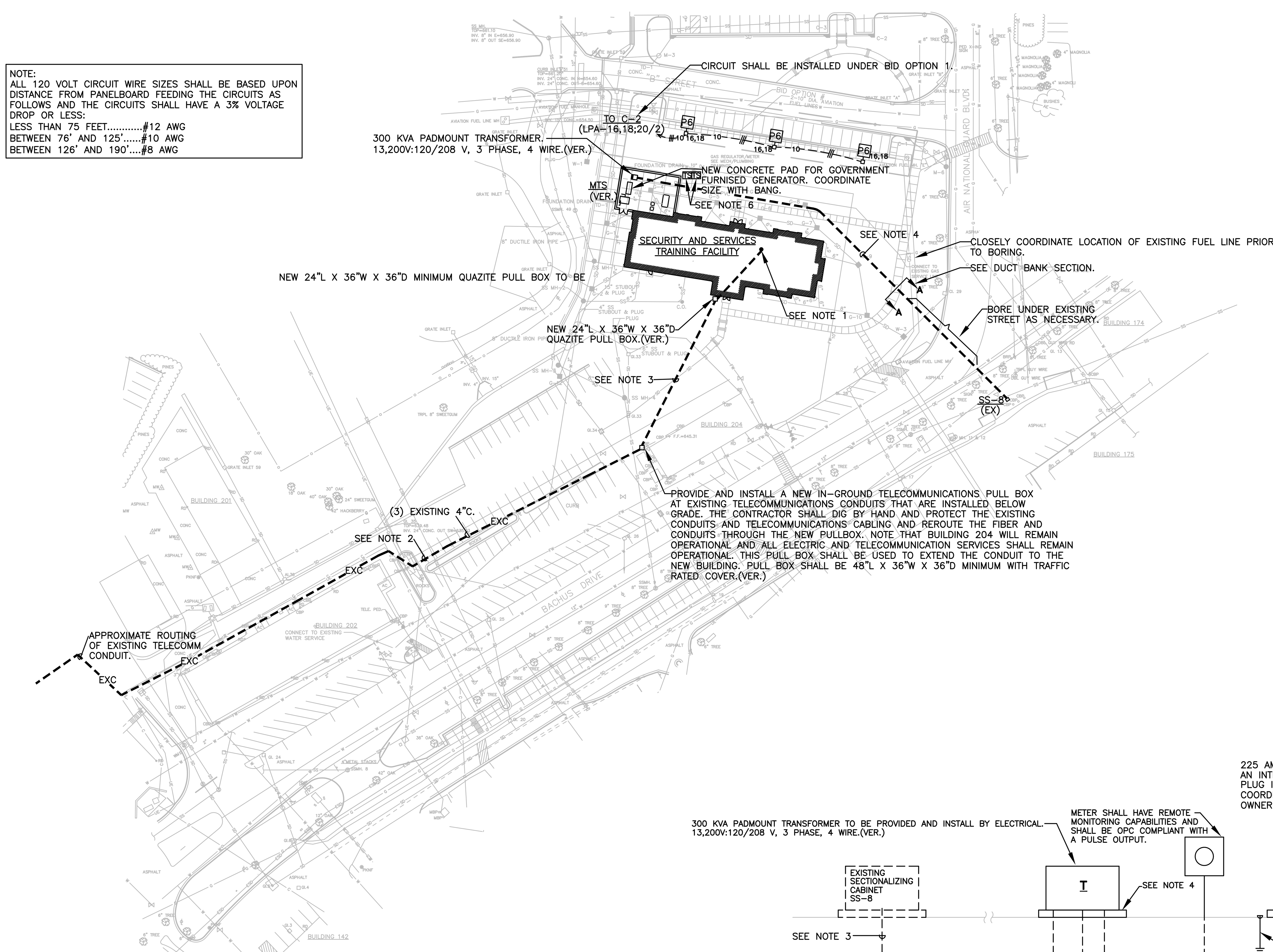

ELECTRICAL SITE PLAN

SCALE: 1" = 60'-0"

NOTES:
1. TURN UP IN COMM. 138 AND TERMINATE CABLES AS REQUIRED.
2. CONTRACTOR SHALL INSTALL A 200 PAIR COPPER CABLE (24 AWG, JELLY FILLED), 48 STRANDS OF SINGLE MODE FIBER OPTIC CABLE & 48 STRANDS OF MULTIMODE FIBER OPTIC CABLE (50 UM LASER OPTIMIZED) FROM BUILDING 190 TELECOMM ROOM TO COMMUNICATIONS 138 UTILIZING EXISTING AND NEW CONDUIT ALONG THE ROUTE INDICATED. TERMINATE ALL CABLES AT BOTH ENDS. VERIFY LOCATION WITH OWNER.
3. NEW CONCRETE ENCASED DUCT BANK TO BE ROUTED FROM THE NEW IN-GROUND TELECOMM PULL BOX TO COMMUNICATIONS ROOM 138 IN THE NEW BUILDING VIA A NEW QUAZITE IN GRADE BOX JUST OUTSIDE THE BUILDING. THE DUCT BANK SHALL BE DYED RED AND SHALL HAVE (3)-4"C. IN IT.
4. (4)-4"C. IN CONCRETE ENCASED DUCT BANK. ONE CONDUIT SHALL BE USED FOR MEDIUM VOLTAGE CABLE AND OTHERS SHALL BE SPARE. SEE SINGLE LINE DIAGRAM FOR CONDUCTORS.
5. ALL UNDERGROUND TELECOMM AND UNDERGROUND PRIMARY CONDUITS SHALL BE CONCRETE ENCASED AND CONCRETE SHALL HAVE RED DYE.
6. CONNECT TAMPER SWITCHES AT SPRINKLER VAULT TO FACP.(VER.)

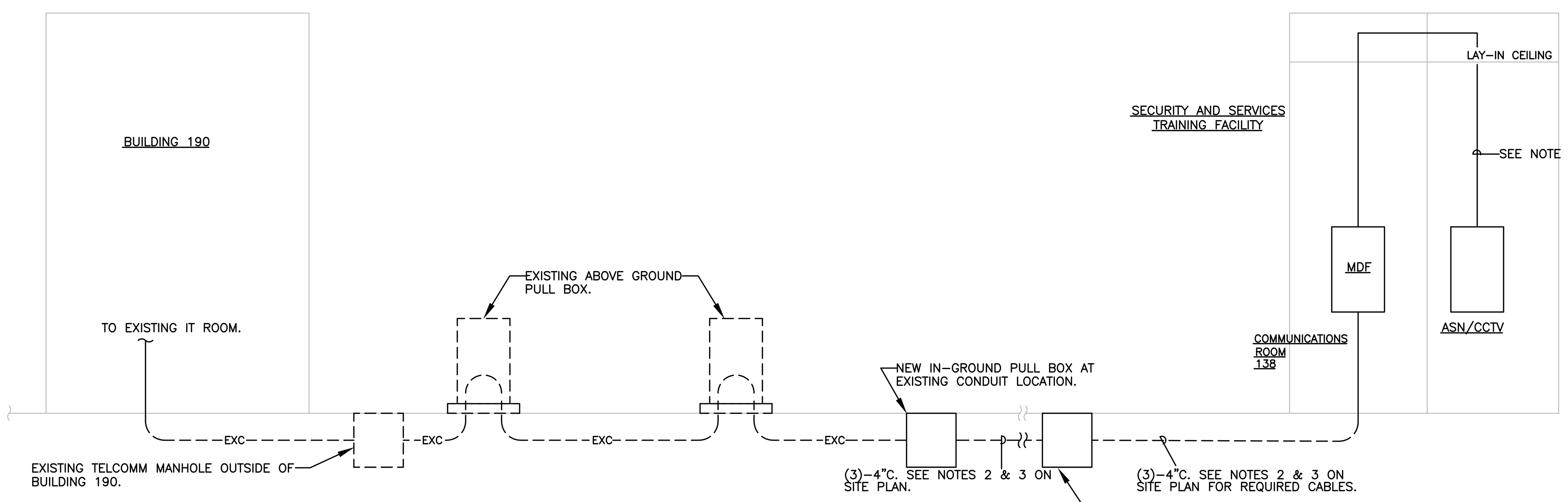

TELECOMMUNICATIONS RISER DIAGRAM

N.T.S.

NOTES:
1. (4)-2"C. WITH (1)-12 STRAND SINGLE MODE FIBER OPTIC CABLE.

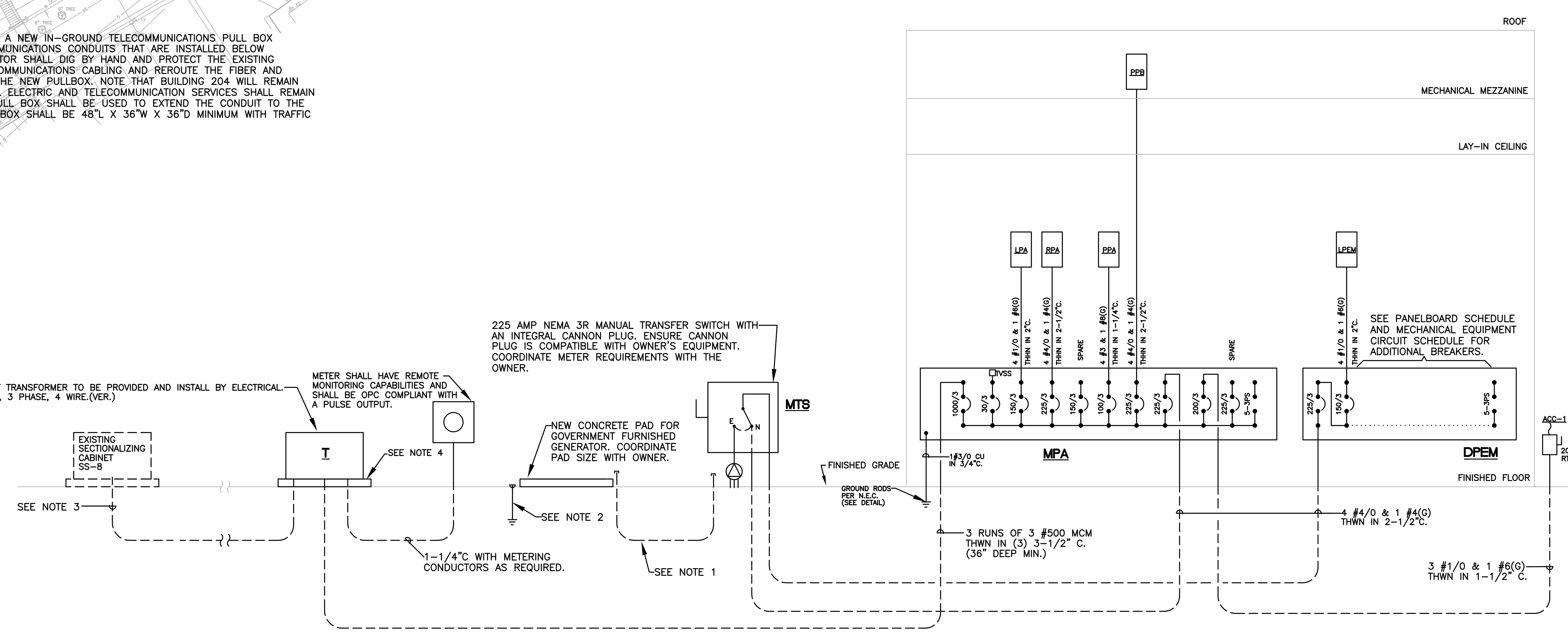

ELECTRICAL SINGLE LINE DIAGRAM

N.T.S.

NOTES:
1. STUB (1)-4"C. FROM GENERATOR PAD LOCATION TO THE MANUAL TRANSFER SWITCH LOCATION FOR OWNER'S USE. CAP AT BOTH ENDS.
2. PROVIDE AND INSTALL GROUND ROD AT GENERATOR PAD FOR CONNECTION TO GOVERNMENT FURNISHED GENERATOR. INSTALL ACCESS WELL FOR GROUND ROD ACCESS.
3. 3 #2/0 XLP WITH FULL CONCENTRIC NEUTRAL, OKONITE, 220 MIL, 15KV JACKETED, STRAND FILL, 133% INSULATION LEVEL IN 4" CONDUIT. THE OTHER (3)-4" CONDUITS SHALL BE SPARE. SEE SITE PLAN FOR APPROXIMATE ROUTING.
4. INSTALL CONCRETE PAD PER DETAILS AND MANUFACTURER'S INSTRUCTIONS.

STATE OF ALABAMA · REGISTERED PROFESSIONAL ENGINEER · STANLEY J. McCARTER
6-19-24

McCARTER ENGINEERING
ELECTRICAL ENGINEERING CONSULTANTS
PHONE: (256) 240-7335
878 AVALON LANE ANNISTON, AL 36207
M.E. JOB #2414

STATE OF ALABAMA · REGISTERED ARCHITECTS

SS&L
ARCHITECTURE & INTERIOR DESIGN
Montgomery | Dothan | WWW.SSLARCH.COM
(M) 334. 263. 5162 | (D) 334. 791. 5248

Rev.	Description	Date

Job Number: 12072
Date: JUNE 2024
Drawn By: MWS
Checked By: SJM

Project Title: New Security Building
117th Air Refueling Wing
Birmingham, AL

Sheet Title: SITE PLAN, SINGLE LINE DIAGRAM AND DETAILS

Sheet Number: E2.2

Branch Panel: MPA

Location: Electrical/Mechanical 123 | **Volts:** 120/208 Wye | **A.I.C. Rating:** 42,000
Supply From: | **Phases:** 3 | **Mains Type:** MB
Mounting: Surface | **Wires:** 4 | **Mains Rating:** 1000 A
Enclosure: Indoor | **MCB Rating:** 1000 A

Notes:
SEE PANELBOARD NOTES 1,2, 4 AND 5

CKT	Circuit Description	Trip	Poles	A		B		C		Poles	Trip	Circuit Description	CKT
1	DPEM(ELECTRICAL 123)	225 A	3	10433 VA	15000 VA					3	225 A	RPA(ELECTRICAL 123)	2
3	--	--	--			12213 VA	11440 VA			--	--	--	4
5	--	--	--					14631 VA	12500 VA	--	--	--	6
7	Spare	150 A	3	0 VA	7748 VA					3	225 A	PPB(MEZZANINE)	8
9	--	--	--			0 VA	7840 VA			--	--	--	10
11	--	--	--					0 VA	6256 VA	--	--	--	12
13	ACC-1(MECH. YARD)	200 A	3	14084 VA	2574 VA					3	150 A	LPA(ELECTRICAL 123)	14
15	--	--	--			14084 VA	1941 VA			--	--	--	16
17	--	--	--					14084 VA	1545 VA	--	--	--	18
19	PPA(123)	100 A	3	4164 VA	0 VA					3	225 A	Spare	20
21	--	--	--			1770 VA	0 VA			--	--	--	22
23	--	--	--					4710 VA	0 VA	--	--	--	24
25	TVSS	30 A	3	0 VA	0 VA					--	--	Space(100/3)	26
27	--	--	--			0 VA	0 VA			--	--	-	28
29	--	--	--					0 VA	0 VA	--	--	-	30
31	Space(100/3)	--	--	0 VA	0 VA					--	--	Space(100/3)	32
33	-	--	--			0 VA	0 VA			--	--	-	34
35	-	--	--					0 VA	0 VA	--	--	-	36
37	Space(100/3)	--	--	0 VA	0 VA					--	--	Space(100/3)	38
39	-	--	--			0 VA	0 VA			--	--	-	40
41	-	--	--					0 VA	0 VA	--	--	-	42
			Total Load:	54003 VA		49288 VA		53726 VA					
			Total Amps:	456 A		411 A		453 A					

Legend:

Load Classification	Connected Load	Demand Factor	Estimated Demand	Panel Totals	
Lighting	6483 VA	100.00%	6483 VA		
Receptacle	44800 VA	61.16%	27400 VA	**Total Conn. Load:**	157017 VA
Heating	61371 VA	100.00%	61371 VA	**Total Est. Demand:**	141121 VA
Heating-1ph	11392 VA	100.00%	11392 VA	**Total Conn.:**	436 A
Cooling-3ph	0 VA	0.00%	0 VA	**Total Est. Demand:**	392 A
Cooling	4956 VA	100.00%	4956 VA		
WATER HEATING	90 VA	100.00%	90 VA		
Motor	9724 VA	115.46%	11228 VA		
Other	17720 VA	100.00%	17720 VA		
Lighting-Exterior	481 VA	100.00%	481 VA		

Notes:

Branch Panel: DPEM

Location: Electrical/Mechanical 123 | **Volts:** 120/208 Wye | **A.I.C. Rating:** 42,000
Supply From: MPA | **Phases:** 3 | **Mains Type:** MB
Mounting: SURFACE | **Wires:** 4 | **Mains Rating:** 225 A
Enclosure: Type 1 | **MCB Rating:**

Notes:
SEE PANELBOARD NOTES 3 AND 4

CKT	Circuit Description	Trip	Poles	A		B		C		Poles	Trip	Circuit Description	CKT
1	LPEM(ELECTRICAL 116)	150 A	3	6556 VA	962 VA					2	25 A	DAC-1(OD & ID)(MECH....	2
3	--	--	--			6820 VA	962 VA			--	--	--	4
5	--	--	--					10200 VA	0 VA	--	--	Space	6
7	HP-1(ID)(130A)	35 A	3	2915 VA	0 VA					--	--	Space	8
9	--	--	--			2915 VA	1516 VA			2	30 A	HP-1(OD)(MECH. YARD)	10
11	--	--	--					2915 VA	1516 VA	--	--	--	12
13	Spare	20 A	1	0 VA	0 VA					1	20 A	Spare	14
15	Spare	20 A	1			0 VA	0 VA			1	20 A	Spare	16
17	Spare	20 A	1					0 VA	0 VA	1	20 A	Spare	18
19	Space	--	--	0 VA	0 VA					--	--	Space	20
21	Space	--	--			0 VA	0 VA			--	--	Space	22
23	Space	--	--					0 VA	0 VA	--	--	Space	24
25	Space	--	--	0 VA	0 VA					--	--	Space	26
27	Space	--	--			0 VA	0 VA			--	--	Space	28
29	Space	--	--					0 VA	0 VA	--	--	Space	30
31	Space	--	--	0 VA	0 VA					--	--	Space	32
33	Space	--	--			0 VA	0 VA			--	--	Space	34
35	Space	--	--					0 VA	0 VA	--	--	Space	36
37	Space	--	--	0 VA	0 VA					--	--	Space	38
39	Space	--	--			0 VA	0 VA			--	--	Space	40
41	Space	--	--					0 VA	0 VA	--	--	Space	42
			Total Load:	10433 VA		12213 VA		14631 VA					
			Total Amps:	87 A		104 A		124 A					

Legend:

Load Classification	Connected Load	Demand Factor	Estimated Demand	Panel Totals	
Lighting	612 VA	100.00%	612 VA		
Receptacle	8960 VA	100.00%	8960 VA	**Total Conn. Load:**	37277 VA
Heating	8745 VA	100.00%	8745 VA	**Total Est. Demand:**	37277 VA
Heating-1ph	1584 VA	100.00%	1584 VA	**Total Conn.:**	103 A
Cooling-3ph	0 VA	0.00%	0 VA	**Total Est. Demand:**	103 A
Cooling	4956 VA	100.00%	4956 VA		
WATER HEATING	0 VA	0.00%	0 VA		
Motor	0 VA	0.00%	0 VA		
Other	12420 VA	100.00%	12420 VA		
Lighting-Exterior	0 VA	0.00%	0 VA		

Notes:

PANELBOARD NOTES:
1. PANEL SHALLL BE SERVICE ENTRANCE RATED.
2. PANEL SHALL BE EQUIPPED WITH BUILT-IN SURGE PROTECTION, CAPABLE OF WITHSTANDING A TRANSIENT SURGE OF 160,000 AMPS.
3. PANEL SHALL BE EQUIPPED WITH BUILT-IN SURGE PROTECTION, CAPABLE OF WITHSTANDING A TRANSIENT SURGE OF 100,000 AMPS.
4. PANEL SHALL BE FULLY RATED AND SHALL HAVE A HINGED FRONT TRIM.
5. I-LINE PANELBOARD SHALL HAVE MICARTA LABELS BESIDE EACH BREAKER, INDICATING LOAD SERVED.
6. PANELBOARD SHALL HAVE A TWO SECTION PANEL.

Branch Panel: LPA

Location: Electrical/Mechanical 123 | **Volts:** 120/208 Wye | **A.I.C. Rating:** 42,000
Supply From: MPA | **Phases:** 3 | **Mains Type:** MLO
Mounting: SURFACE | **Wires:** 4 | **Mains Rating:** 150 A
Enclosure: Type 1 | **MCB Rating:**

Notes:
SEE PANELBOARD NOTES 3 AND 4

CKT	Circuit Description	Trip	Poles	A		B		C		Poles	Trip	Circuit Description	CKT
1	Lighting(122-124,142)	20 A	1	409 VA	0 VA					1	20 A	Space	2
3	Lighting(142,144,146,147A,...	20 A	1			1114 VA	0 VA			1	20 A	Spare	4
5	Lighting(126,140,142)	20 A	1					904 VA	584 VA	1	20 A	Lighting(150,151)	6
7	Spare	20 A	1	0 VA	1598 VA					1	20 A	Lighting(125,127,129,131,13...	8
9	Spare	20 A	1			0 VA	770 VA			1	20 A	Lighting(143,145,147)	10
11	Spare	20 A	1					0 VA	0 VA	1	20 A	Spare	12
13	Space	--	--	0 VA	367 VA					1	20 A	Lighting C-1(OUTSIDE)	14
15	Space	--	--			0 VA	57 VA			2	20 A	Lighting-(C-1)(BID OPTION 1)	16
17	Space	--	--					0 VA	57 VA	--	--	--	18
19	TIME CLOCK(123)	20 A	1	200 VA	0 VA					--	--	Space	20
21	Space	--	--			0 VA	0 VA			1	20 A	Spare	22
23	Spare	20 A	1					0 VA	0 VA	1	20 A	Spare	24
25	Spare	20 A	1	0 VA	0 VA					1	20 A	Spare	26
27	Spare	20 A	1			0 VA	0 VA			--	--	Space	28
29	Space	--	--					0 VA	0 VA	--	--	Space	30
31	Space	--	--	0 VA	0 VA					--	--	Space	32
33	Space	--	--			0 VA	0 VA			--	--	Space	34
35	Space	--	--					0 VA	0 VA	--	--	Space	36
37	Space	--	--	0 VA	0 VA					--	--	Space	38
39	Space	--	--			0 VA	0 VA			--	--	Space	40
41	Space	--	--					0 VA	0 VA	--	--	Space	42
			Total Load:	2574 VA		1941 VA		1545 VA					
			Total Amps:	22 A		17 A		13 A					

Legend:

Load Classification	Connected Load	Demand Factor	Estimated Demand	Panel Totals	
Lighting	5379 VA	100.00%	5379 VA		
Receptacle	0 VA	0.00%	0 VA	**Total Conn. Load:**	6060 VA
Heating	0 VA	0.00%	0 VA	**Total Est. Demand:**	6060 VA
Heating-1ph	0 VA	0.00%	0 VA	**Total Conn.:**	17 A
Cooling-3ph	0 VA	0.00%	0 VA	**Total Est. Demand:**	17 A
Cooling	0 VA	0.00%	0 VA		
WATER HEATING	0 VA	0.00%	0 VA		
Motor	0 VA	0.00%	0 VA		
Other	200 VA	100.00%	200 VA		
Lighting-Exterior	481 VA	100.00%	481 VA		

Notes:

Branch Panel: LPEM

Location: Mechanical/Electrcal 123 | **Volts:** 120/208 Wye | **A.I.C. Rating:** 42,000
Supply From: DPEM | **Phases:** 3 | **Mains Type:** MLO
Mounting: SURFACE | **Wires:** 4 | **Mains Rating:** 150 A
Enclosure: Type 1 | **MCB Rating:**

Notes:
SEE PANELBOARD NOTES 3 AND 4

CKT	Circuit Description	Trip	Poles	A		B		C		Poles	Trip	Circuit Description	CKT
1	Lighting(130,130A,130B,132...	20 A	1	612 VA	1000 VA					1	20 A	Receptacles(130B,142)	2
3	Receptacles(130,130B,132,...	20 A	1			1020 VA	1000 VA			1	20 A	Receptacle(130)	4
5	Receptacles(130,130A)	20 A	1					1000 VA	600 VA	1	20 A	Receptacles(130A)	6
7	Receptacles(138)	20 A	1	560 VA	400 VA					1	20 A	Receptacles(138)	8
9	Receptacles(138)	20 A	1			400 VA	600 VA			1	20 A	Receptacles(138)	10
11	IDS(STORAGE 148A)	20 A	1					1200 VA	2800 VA	1	30 A	IDS ANNUNCIATOR(134)	12
13	MDF(138)	20 A	1	200 VA	1000 VA					1	20 A	Receptacle(130)	14
15	CCTV RACK(130A)	30 A	1			2400 VA	200 VA			1	20 A	MDF	16
17	Receptacle(130)	20 A	1					1000 VA	2400 VA	1	30 A	ASN RACK(130A)	18
19	FACP(151)	20 A	1	200 VA	0 VA					--	--	Space	20
21	SSA(138)	20 A	1			200 VA	1000 VA			3	20 A	FURNITURE(130)	22
23	BAS(138)	20 A	1					200 VA	1000 VA	--	--	--	24
25	DH-3(130)	20 A	1	1584 VA	1000 VA					--	--	--	26
27	Spare	20 A	1			0 VA	0 VA			1	20 A	Spare	28
29	Spare	20 A	1					0 VA	0 VA	--	--	Space	30
31	Spare	20 A	1	0 VA	0 VA					1	20 A	Spare	32
33	Spare	20 A	1			0 VA	0 VA			1	20 A	Spare	34
35	Spare	20 A	1					0 VA	0 VA	1	20 A	Spare	36
37	Space	--	--	0 VA	0 VA					--	--	Space	38
39	Space	--	--			0 VA	0 VA			--	--	Space	40
41	Space	--	--					0 VA	0 VA	--	--	Space	42
			Total Load:	6556 VA		6820 VA		10200 VA					
			Total Amps:	55 A		57 A		85 A					

Legend:

Load Classification	Connected Load	Demand Factor	Estimated Demand	Panel Totals	
Lighting	612 VA	100.00%	612 VA		
Receptacle	8960 VA	100.00%	8960 VA	**Total Conn. Load:**	23576 VA
Heating	0 VA	0.00%	0 VA	**Total Est. Demand:**	23576 VA
Heating-1ph	1584 VA	100.00%	1584 VA	**Total Conn.:**	65 A
Cooling-3ph	0 VA	0.00%	0 VA	**Total Est. Demand:**	65 A
Cooling	0 VA	0.00%	0 VA		
WATER HEATING	0 VA	0.00%	0 VA		
Motor	0 VA	0.00%	0 VA		
Other	12420 VA	100.00%	12420 VA		
Lighting-Exterior	0 VA	0.00%	0 VA		

Notes:

6-19-24

McCARTER ENGINEERING
ELECTRICAL ENGINEERING CONSULTANTS
PHONE: (256) 240-7335 878 AVALON LANE
ANNISTON, AL 36207
M.E. JOB #2415

SS&L
ARCHITECTURE & INTERIOR DESIGN
1115 South Court Street | Montgomery, AL 36104
Tel. 334. 263. 5162 | WWW.SSLARCH.COM

Rev.	Description	Date

Job Number: 12072
Date: JUNE 2024
Drawn By: MWS
Checked By: SJM

Project Title: New Security Building, 117th Refueling Wing, Birmingham, AL

Sheet Title: PANELBOARD SCHEDULES

Sheet Number: E2.3

STATE OF ALABAMA REGISTERED ARCHITECTS

Branch Panel: RPA

Location:	Electrical/Mechanical 123	**Volts:**	120/208 Wye	**A.I.C. Rating:**	42,000
Supply From:	MPA	**Phases:**	3	**Mains Type:**	MLO
Mounting:	SURFACE	**Wires:**	4	**Mains Rating:**	225 A
Enclosure:	Type 1			**MCB Rating:**	

Notes:
SEE PANELBOARD NOTES 3, 4 AND 6

CKT	Circuit Description	Trip	Poles	A		B		C		Poles	Trip	Circuit Description	CKT
1	Receptacles(122,142)	20 A	1	1200 VA	800 VA					1	20 A	Receptacles(123,124)	2
3	Receptacles(122,144)	20 A	1			800 VA	800 VA			1	20 A	Receptacles(125,142)	4
5	Receptacles(126,142,144)	20 A	1					880 VA	800 VA	1	20 A	Receptacles(129)	6
7	Receptacles(127)	20 A	1	600 VA	1000 VA					1	20 A	Receptacles(133C)	8
9	Receptacles(131)	20 A	1			600 VA	1000 VA			1	20 A	Receptacles(133A)	10
11	Receptacles(133A,133C)	20 A	1					1000 VA	800 VA	1	20 A	Receptacles(135,142)	12
13	Receptacles(133B)	20 A	1	1000 VA	800 VA					1	20 A	REFRIGERATOR(137)	14
15	Receptacles(137)	20 A	1			600 VA	1000 VA			1	20 A	Receptacles(139,142)	16
17	Receptacles(137)	20 A	1					800 VA	1200 VA	1	20 A	Receptacles(141-143)	18
19	Receptacles(142,144,145)	20 A	1	1000 VA	1000 VA					1	20 A	Receptacles(144)	20
21	Receptacles(145)	20 A	1			1000 VA	1000 VA			1	20 A	Receptacles(144,146,147)	22
23	Receptacles(144,146,148B)	20 A	1					820 VA	800 VA	1	20 A	Receptacles(150)	24
25	RECEPTACLES(148A,150)	20 A	1	1000 VA	1000 VA					1	20 A	Receptacles(144,148A)	26
27	Receptacles(150)	20 A	1			1000 VA	1200 VA			1	20 A	Receptacles(150,151, MECH....	28
29	EWC(142)	20 A	1					600 VA	600 VA	1	20 A	EWC(142)	30
31	EWC(142)	20 A	1	600 VA	600 VA					1	20 A	EWC(142)	32
33	ICE MAKER(137)	20 A	1			1440 VA	1000 VA			1	20 A	MW(137)	34
35	COFFEE MAKER(137)	20 A	1					1000 VA	800 VA	1	20 A	Receptacle(129,142)	36
37	Receptacle(147)	20 A	1	1000 VA	1000 VA					1	20 A	Parts Washer(144)	38
39	Space	--	--			0 VA	0 VA			--	--	Space	40
41	Space	--	--					0 VA	0 VA	--	--	Space	42
43	Space	--	--	0 VA	0 VA					--	--	Space	44
45	Spare	20 A	1			0 VA	0 VA			1	20 A	Spare	46
47	HAND DRYER (148B)	20 A	1					1200 VA	1200 VA	1	20 A	HAND DRYER (126)	48
49	HAND DRYER (140)	20 A	1	1200 VA	1200 VA					1	20 A	HAND DRYER (150)	50
51	Space	--	--			0 VA	0 VA			--	--	Space	52
53	Space	--	--					0 VA	0 VA	--	--	Space	54
55	Space	--	--	0 VA	0 VA					--	--	Space	56
57	Space	--	--			0 VA	0 VA			--	--	Space	58
59	Space	--	--					0 VA	0 VA	--	--	Space	60
61	Space	--	--	0 VA	0 VA					--	--	Space	62
63	Space	--	--			0 VA	0 VA			--	--	Space	64
65	Space	--	--					0 VA	0 VA	--	--	Space	66
67	Space	--	--	0 VA	0 VA					--	--	Space	68
69	Space	--	--			0 VA	0 VA			--	--	Space	70
71	Space	--	--					0 VA	0 VA	--	--	Space	72
73	Space	--	--	0 VA	0 VA					--	--	Space	74
75	Space	--	--			0 VA	0 VA			--	--	Space	76
77	Space	--	--					0 VA	0 VA	--	--	Space	78
79	Space	--	--	0 VA	0 VA					--	--	Space	80
81	Space	--	--			0 VA	0 VA			--	--	Space	82
83	Space	--	--					0 VA	0 VA	--	--	Space	84
			Total Load:	15000 VA		11440 VA		12500 VA					
			Total Amps:	126 A		95 A		106 A					

Legend:

Load Classification	Connected Load	Demand Factor	Estimated Demand	Panel Totals	
Other	4900 VA	100.00%	4900 VA		
Power	0 VA	0.00%	0 VA	**Total Conn. Load:**	38940 VA
Receptacle	34040 VA	64.69%	22020 VA	**Total Est. Demand:**	26920 VA
				Total Conn.:	108 A
				Total Est. Demand:	75 A

Notes:

PANELBOARD NOTES:
1. PANEL SHALLL BE SERVICE ENTRANCE RATED.
2. PANEL SHALL BE EQUIPPED WITH BUILT-IN SURGE PROTECTION, CAPABLE OF WITHSTANDING A TRANSIENT SURGE OF 160,000 AMPS.
3. PANEL SHALL BE EQUIPPED WITH BUILT-IN SURGE PROTECTION, CAPABLE OF WITHSTANDING A TRANSIENT SURGE OF 100,000 AMPS.
4. PANEL SHALL BE FULLY RATED AND SHALL HAVE A HINGED FRONT TRIM.
5. I-LINE PANELBOARD SHALL HAVE MICARTA LABELS BESIDE EACH BREAKER, INDICATING LOAD SERVED.
6. PANELBOARD SHALL HAVE A TWO SECTION PANEL.

Branch Panel: PPA

Location:	Electrical/Mechanical 123	**Volts:**	120/208 Wye	**A.I.C. Rating:**	42,000
Supply From:	MPA	**Phases:**	3	**Mains Type:**	MLO
Mounting:	SURFACE	**Wires:**	4	**Mains Rating:**	100 A
Enclosure:	Type 1			**MCB Rating:**	

Notes:
SEE PANELBOARD NOTES 3 AND 4

CKT	Circuit Description	Trip	Poles	A		B		C		Poles	Trip	Circuit Description	CKT
1	GWH-1(124)	15 A	1	90 VA	70 VA					1	15 A	CP-1(124)	2
3	Space	--	--			0 VA	750 VA			2	15 A	WEH-1(151)	4
5	CEH-1(143)	15 A	2					1000 VA	750 VA	--	--	--	6
7	--	--	--	1000 VA	1584 VA					1	20 A	DH-1(150)	8
9	ACC CNTRL CKT(MECH. YD)	15 A	1			200 VA	400 VA			1	20 A	HEAT TRACING(MECH....	10
11	B-1(MECH. YARD)	15 A	1					792 VA	1000 VA	2	15 A	CEH-2(137)	12
13	BP-1(MECH. YARD)	15 A	3	420 VA	1000 VA					--	--	--	14
15	--	--	--			420 VA	0 VA			--	--	Space	16
17	--	--	--					420 VA	0 VA	--	--	Space	18
19	Space	--	--	0 VA	0 VA					--	--	Space	20
21	Space	--	--			0 VA	0 VA			--	--	Space	22
23	CS-3(123)	15 A	1					348 VA	400 VA	1	20 A	HEAT TRACING(MECH....	24
25	Spare	20 A	1	0 VA	0 VA					1	20 A	Spare	26
27	Spare	20 A	1			0 VA	0 VA			1	20 A	Spare	28
29	Spare	20 A	1					0 VA	0 VA	1	20 A	Spare	30
31	Space	--	--	0 VA	0 VA					--	--	Space	32
33	Space	--	--			0 VA	0 VA			--	--	Space	34
35	Space	--	--					0 VA	0 VA	--	--	Space	36
37	Space	--	--	0 VA	0 VA					--	--	Space	38
39	Space	--	--			0 VA	0 VA			--	--	Space	40
41	Space	--	--					0 VA	0 VA	--	--	Space	42
			Total Load:	4164 VA		1770 VA		4710 VA					
			Total Amps:	38 A		15 A		42 A					

Legend:

Load Classification	Connected Load	Demand Factor	Estimated Demand	Panel Totals	
Lighting	0 VA	0.00%	0 VA		
Receptacle	800 VA	100.00%	800 VA	**Total Conn. Load:**	10644 VA
Heating	0 VA	0.00%	0 VA	**Total Est. Demand:**	10959 VA
Heating-1ph	8224 VA	100.00%	8224 VA	**Total Conn.:**	30 A
Cooling-3ph	0 VA	0.00%	0 VA	**Total Est. Demand:**	30 A
Cooling	0 VA	0.00%	0 VA		
WATER HEATING	90 VA	100.00%	90 VA		
Motor	1330 VA	123.68%	1645 VA		
Other	200 VA	100.00%	200 VA		
Lighting-Exterior	0 VA	0.00%	0 VA		

Notes:

Branch Panel: PPB

Location:	Mezzanine	**Volts:**	120/208 Wye	**A.I.C. Rating:**	22,000
Supply From:	MPA	**Phases:**	3	**Mains Type:**	MLO
Mounting:	Surface	**Wires:**	4	**Mains Rating:**	225 A
Enclosure:	Type 1			**MCB Rating:**	

Notes:
SEE PANELBOARD NOTES 3 AND 4

CKT	Circuit Description	Trip	Poles	A		B		C		Poles	Trip	Circuit Description	CKT
1	Receptacles-(MEZZANINE)	20 A	1	1000 VA	492 VA					1	20 A	Lighting-(MEZZANINE)	2
3	HWP-1(MEZZANINE)	15 A	3			793 VA	0 VA			3	15 A	HWP-2(MEZZANINE)	4
5	--	--	--					793 VA	0 VA	--	--	--	6
7	--	--	--	793 VA	0 VA					--	--	--	8
9	CWP-1(MEZZANINE)	40 A	3			2005 VA	0 VA			3	40 A	CWP-2(MEZZANINE)	10
11	--	--	--					2005 VA	0 VA	--	--	--	12
13	--	--	--	2005 VA	0 VA					--	--	--	14
15	ERV-1(MEZZANINE)	15 A	3			552 VA	0 VA			--	--	Space	16
17	--	--	--					552 VA	0 VA	--	--	Space	18
19	--	--	--	552 VA	0 VA					--	--	Space	20
21	Space	--	--			0 VA	0 VA			--	--	Space	22
23	Space	--	--					0 VA	0 VA	--	--	Space	24
25	Space	--	--	0 VA	0 VA					--	--	Space	26
27	AHU-1(MEZZANINE)	60 A	3			2906 VA	1584 VA			1	20 A	DH-2(MEZZANINE)	28
29	--	--	--					2906 VA	0 VA	1	20 A	Spare	30
31	--	--	--	2906 VA	0 VA					1	20 A	Spare	32
33	Space	--	--			0 VA	0 VA			1	20 A	Spare	34
35	Space	--	--					0 VA	0 VA	1	20 A	Spare	36
37	Space	--	--	0 VA	0 VA					--	--	Space	38
39	Spare	20 A	1			0 VA	0 VA			--	--	Space	40
41	Spare	20 A	1					0 VA	0 VA	--	--	Space	42
			Total Load:	7748 VA		7840 VA		6256 VA					
			Total Amps:	66 A		67 A		52 A					

Legend:

Load Classification	Connected Load	Demand Factor	Estimated Demand	Panel Totals	
Lighting	492 VA	100.00%	492 VA		
Receptacle	1000 VA	100.00%	1000 VA	**Total Conn. Load:**	21844 VA
Heating	10374 VA	100.00%	10374 VA	**Total Est. Demand:**	23348 VA
Heating-1ph	1584 VA	100.00%	1584 VA	**Total Conn.:**	61 A
Cooling-3ph	0 VA	0.00%	0 VA	**Total Est. Demand:**	65 A
Cooling	0 VA	0.00%	0 VA		
WATER HEATING	0 VA	0.00%	0 VA		
Motor	8394 VA	117.91%	9898 VA		
Other	0 VA	0.00%	0 VA		
Lighting-Exterior	0 VA	0.00%	0 VA		

Notes:

6-19-24

McCARTER ENGINEERING
ELECTRICAL ENGINEERING CONSULTANTS
PHONE: (256) 240-7335 878 AVALON LANE
ANNISTON, AL 36207
M.E. JOB #2415

SS&L
ARCHITECTURE & INTERIOR DESIGN
1115 South Court Street | Montgomery, AL 36104
Tel. 334. 263. 5162 | WWW.SSLARCH.COM

Rev.	Description	Date

Job Number: 12072
Date: JUNE 2024
Drawn By: MWS
Checked By: SJM

Project Title
New Security Building
117th Refueling Wing
Birmingham, AL

Sheet Title
PANELBOARD SCHEDULES CONTINUED

Sheet Number
E2.4

NOTE:
ALL 120 VOLT CIRCUIT WIRE SIZES SHALL BE BASED UPON DISTANCE FROM PANELBOARD FEEDING THE CIRCUITS AS FOLLOWS AND THE CIRCUITS SHALL HAVE A
3% VOLTAGE DROP OR LESS:
LESS THAN 75 FEET.....#12 AWG
BETWEEN 76' AND 125'.....#10 AWG
BETWEEN 126' AND 190'....#8 AWG

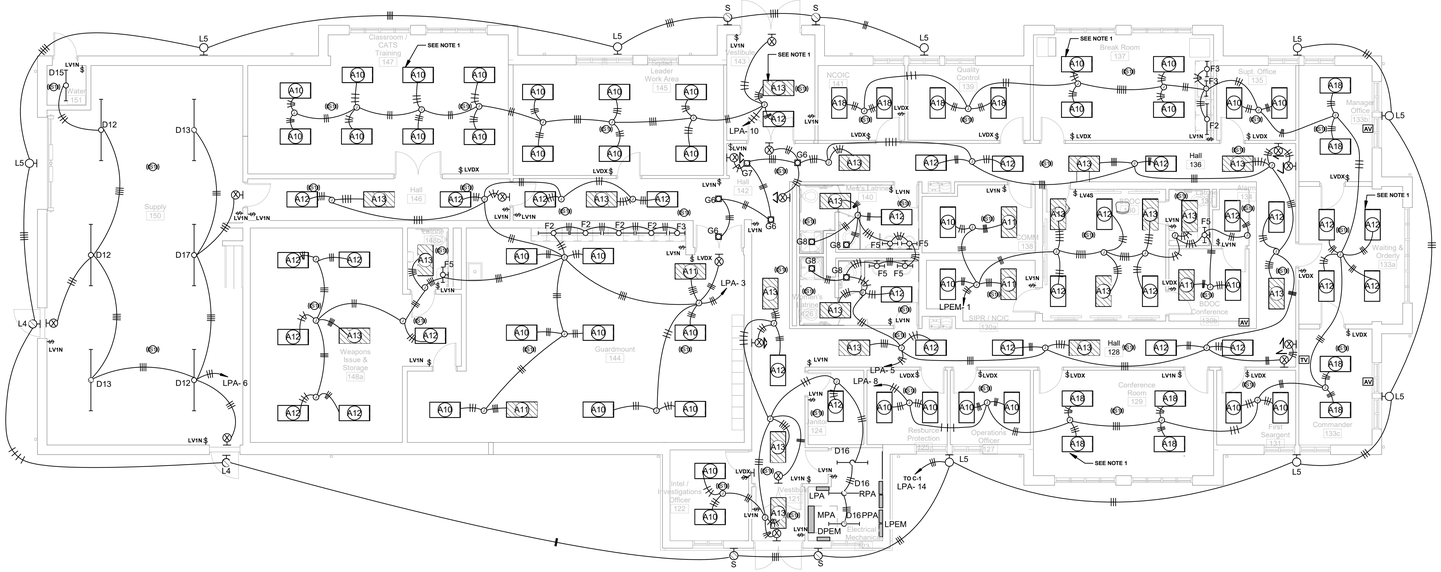

1 FIRST FLOOR LIGHTING PLAN
1/8" = 1'-0"

NOTES:
1. IF BID OPTION FOR ALTERNATE ROOF CONFIGURATION IS TAKEN, CONTRACTOR SHALL MODIFY LIGHTING LAYOUT AS AS INDICATED ON THE ARCHITECTURAL PLANS.

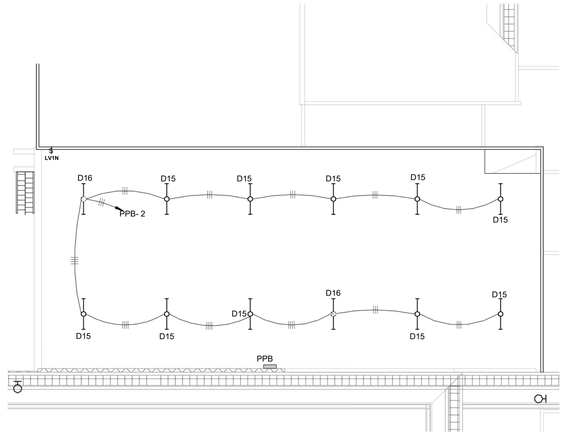

2 MEZZANINE LIGHTING PLAN
1/8" = 1'-0"

S|S&L
ARCHITECTURE & INTERIOR DESIGN
1115 South Court Square | Montgomery, AL 36104
Tel. 334. 263. 5162 | WWW.SSLARCH.COM

Rev.	Description	Date

Job Number 12072
Date JUNE 2024
Drawn By MWS
Checked By SJM
Project Title

New Security Building
117th Refueling Wing
Birmingham, AL

Sheet Title
FIRST FLOOR LIGHTING PLAN AND MEZZANINE LIGHTING PLAN

Sheet Number
E3.1

McCARTER ENGINEERING
ELECTRICAL ENGINEERING CONSULTANTS
PHONE: (256) 240-7335 878 AVALON LANE
ANNISTON, AL 36207
M.E. JOB #2415

ALABAMA REGISTERED PROFESSIONAL ENGINEER No. 22753 STANLEY J. MCCARTER
6-19-24

STATE OF ALABAMA MONTGOMERY
Jim S. Sorg, Jr. 1045
Gregory A. O'Neal 4242
Wesley E. Garner 4244
ALABAMA REGISTERED ARCHITECTS

NOTE:
ALL 120 VOLT CIRCUIT WIRE SIZES SHALL BE BASED UPON DISTANCE FROM PANELBOARD FEEDING THE CIRCUITS AS FOLLOWS AND THE CIRCUITS SHALL HAVE A
3% VOLTAGE DROP OR LESS:
LESS THAN 75' FEET.....#12 AWG
BETWEEN 76' AND 125'.....#10 AWG
BETWEEN 126' AND 190'.....#8 AWG

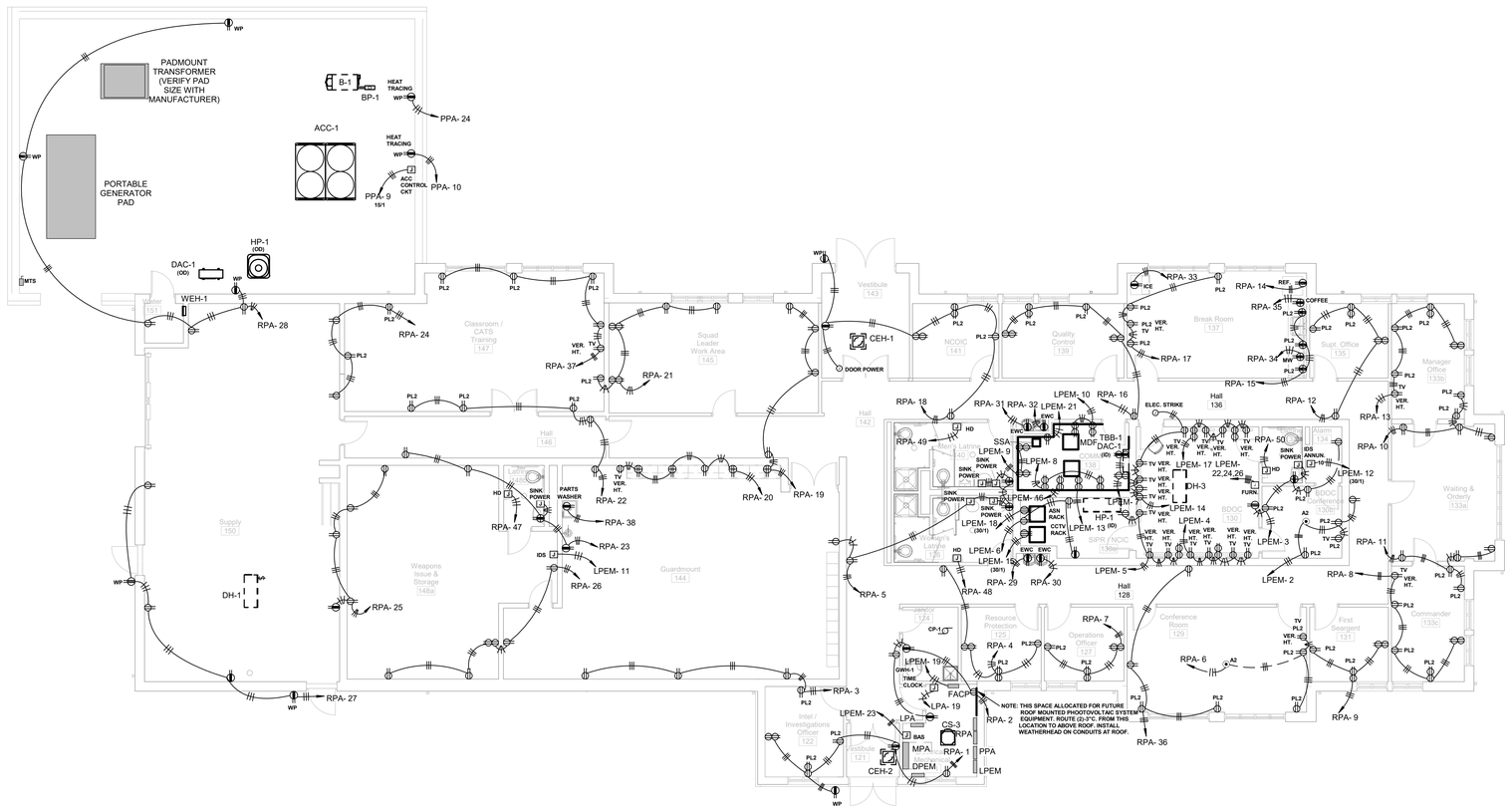

1 FIRST FLOOR POWER PLAN
1/8" = 1'-0"

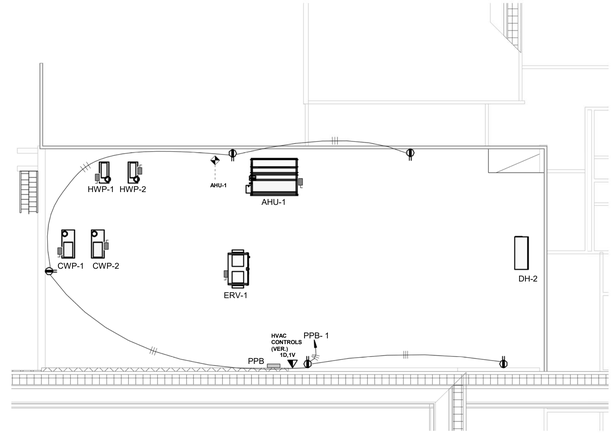

2 MEZZANINE POWER AND AUXILIARIES PLAN
1/8" = 1'-0"

MECHANICAL EQUIPMENT CIRCUIT SCHEDULE

UNIT ID	CIRCUIT NUMBER	BREAKER SIZE	WIRE SIZE	GROUND SIZE	CONDUIT SIZE	DISCONNECT TYPE	ROOM #
ACC-1	MPA-13,15,17	200/3	SEE SINGLE LINE DIAGRAM			200/3, F, RT	MECH. YARD
DAC-1(OD)(ID)*	DPEM-2,4	25/2	2 #10	#10	1/2"	30/2, F, RT	MECH. YARD
HP-1(OD)	DPEM-10,12	30/2	2 #8	#8	3/4"	30/2, F, RT	MECH. YARD
HP-1(ID)	DPEM-7,9,11	35/3	3 #8	#10	3/4"	60/3, NF	130A
WEH-1	PPA-4,6	15/2	2 #12	#12	1/2"	NONE	151
CEH-1	PPA-5,7	15/2	2 #12	#12	1/2"	NONE	143
CEH-2	PPA-12,14	15/2	2 #12	#12	1/2"	NONE	127
DH-1	PPA-8	20/1	2 #8	#8	3/4"	TS	150
DH-2	PPB-28	20/1	2 #12	#12	1/2"	TS	MEZZANINE
DH-3	LPEM-25	20/1	2 #10	#10	1/2"	TS	130
GWH-1	PPA-1	15/1	2 #12	#12	1/2"	TS	124
CP-1	PPA-2	15/1	2 #12	#12	1/2"	TS	124
BP-1	PPA-13,15,17	15/3	3 #12	#12	1/2"	30/3, F, RT	MECH. YARD
HWP-1	PPB-3,5,7	15/3	3 #12	#12	1/2"	NONE	MEZZANINE
HWP-2	PPB-4,6,8	15/3	3 #12	#12	1/2"	NONE	MEZZANINE
CWP-1	PPB-9,11,13	40/3	3 #8	#10	3/4"	NONE	MEZZANINE
CWP-2	PPB-10,12,14	40/3	3 #8	#10	3/4"	NONE	MEZZANINE
B-1	PPA-11	15/1	2 #10	#10	1/2"	TS(WP)	MECH. YARD
ERV-1	PPB-15,17,19	15/3	3 #12	#12	1/2"	NONE	MEZZANINE
AHU-1	PPB-27,29,31	60/3	3 #8	#10	3/4"	NONE	MEZZANINE
CS-3	PPA-23	15/1	2 #12	#12	1/2"	TS	123

NF - NONFUSED
F - FUSED (FUSE PER MANUFACTURERS RECOMMENDATIONS)
RT - RAINTIGHT
TS - TOGGLE SWITCH ("WP" INDICATES WEATHERPROOF)
MRS - MOTOR RATED SWITCH
S/T - SHUNT TRIP BREAKER
DPTS - DOUBLE POLE TOGGLE SWITCH
NOTES:
1. MAINTAIN CODE REQUIRED CLEARANCES FOR DISCONNECTS.
2. CONTRACTOR SHALL ENSURE THAT SO CORDS ARE NOT INSTALLED ABOVE A LAY-IN CEILING. HARDWIRE EQUIPMENT WITH A TOGGLE SWITCH AND FLEXIBLE METAL CONDUIT AS REQUIRED.
* CIRCUIT DAC(ID) FROM DAC(OD). PROVIDE A 20A DPTS DISCONNECT FOR DAC(ID). CIRCUIT INDOOR UNIT WITH 2 #12 & 1 #12(G) THHN IN 1/2"C.

S|S&L
ARCHITECTURE & INTERIOR DESIGN
1135 South Colonnade, Birmingham, AL 35205
Tel. 334. 263. 5162 | WWW.SSLARCH.COM

Rev.	Description	Date

Job Number 12072
Date JUNE 2024
Drawn By MWS
Checked By SJM
Project Title

New Security Building
117th Refueling Wing
Birmingham, AL

Sheet Title
BASE BID FIRST FLOOR POWER PLAN AND MEZZANINE POWER AND AUXILIARIES PLAN

Sheet Number
E4.1

STATE OF ALABAMA REGISTERED PROFESSIONAL ENGINEER No. 22753 STANLEY J. MCCARTER
6-19-24

McCARTER ENGINEERING
ELECTRICAL ENGINEERING CONSULTANTS
PHONE: (256) 240-7335 878 AVALON LANE
ANNISTON, AL 36207

M.E. JOB #2415

STATE OF ALABAMA MONTGOMERY REGISTERED ARCHITECTS

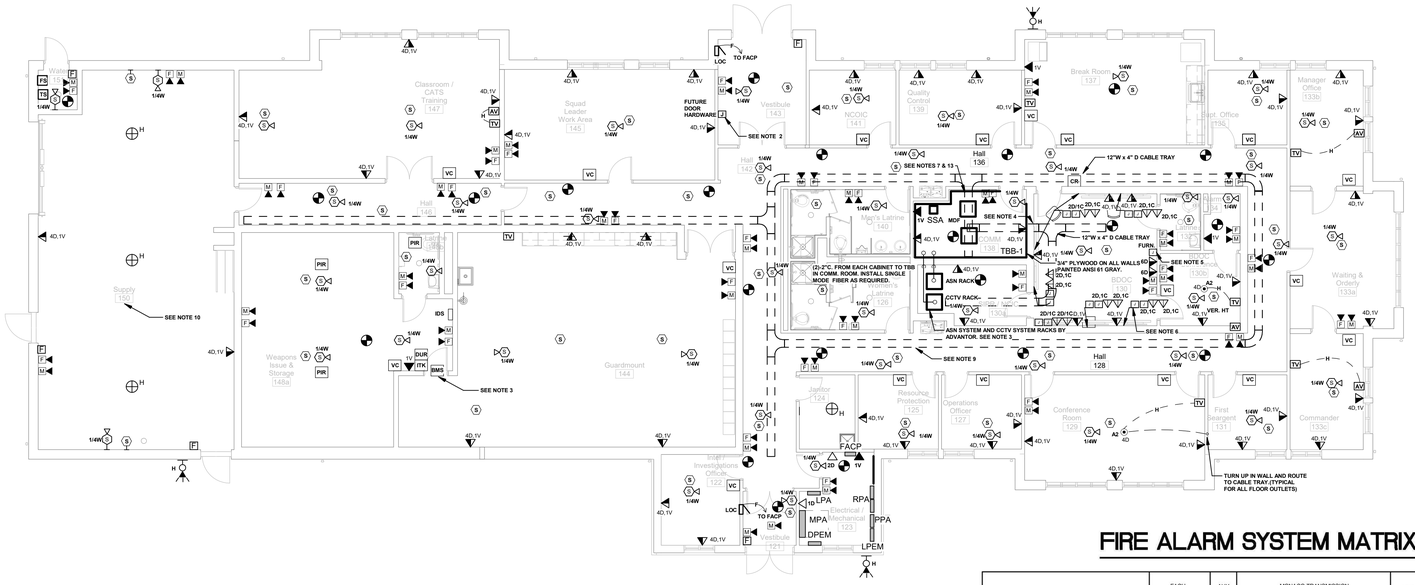

1 FIRST FLOOR AUXILIARIES PLAN
1/8" = 1'-0"

NOTES:
1. NOT USED.
2. JUNCTION BOX WITH CONDUIT STUBBED UP ABOVE CEILING FOR FUTURE DOOR CONTROL.
3. CONTRACTOR SHALL COORDINATE ALL ASN/CCTV AND IDS SYSTEMS WITH MIKE OLLIVIER AT AT ADVANTOR SYSTEM CORPORATION, 1-800-438-6415. ALL ASN/CCTV AND IDS SYSTEMS SHALL BE INCLUDED IN CONTRACTORS BID. CONTRACTOR SHALL PROVIDE AND INSTALL FULLY FUNCTIONING IDS AND ASN/CCTV SYSTEM AS REQUIRED.
4. CONTRACTOR SHALL ROUTE (4)-3" CONDUIT SLEEVES FROM COMM 138 TO BDOC 130.
5. PROVIDE (4)-3"C. FROM JUNCTION BOX TO ABOVE LAY-IN CEILING FOR OWNER PROVIDED FURNITURE.
6. JUNCTION BOXES FOR TV'S SHALL HAVE A 2-1/2"C. STUBBED ABOVE LAY-IN CEILING(TYP.)
7. CABLES SHALL TRANSITION FROM CABLE TRAY TO LADDER RACK THROUGH 3"C. SLEEVES IN THE CEILING. PROVIDE QUANTITY OF SLEEVES AS NECESSARY.
8. NOT USED.
9. 12" WIDE X 4" DEEP BACKET STYLE CABLE TRAY INSTALLED ABOVE THE CEILING FOR VOICE AND DATA CABLES. WIREMOLD WB SERIES OR EQUAL WITH ALL NECESSARY FITTINGS AND ATTACHMENTS. COORDINATE EXACT LOCATION WITH MECHANICAL CONTRACTOR AND G.C. (TYP)
10. CONTRACTOR SHALL ROUTE ALL CONDUIT IN A NEAT AND ORDERLY MANNER IN THIS ROOM DUE TO THE EXPOSED STRUCTURE.
11. NOT USED.
12. CONTRACTOR SHALL COLOR CODE CONDUITS FOR AUXILIARIES SYSTEMS AS REQUIRED. COORDINATE COLOR CODING WITH THE OWNER.
13. LADDER RACK ABOVE TELLECOMM/UNICATIONS RACK.
14. CONTRACTOR SHALL INSTALL TBB-1 FOUR INCHES OFF THE WALL AS REQUIRED BY OWNER.
15. CONTRACTOR SHALL PROVIDE A FIRE ALARM CONTROL RELAY FOR SHUTTING THE PAGING SYSTEM DOWN IN THE EVENT OF A FIRE ALARM/MASS NOTIFICATION EVENT.

FIRE ALARM SYSTEM MATRIX

	FACU DISPLAY			AUX FUNC	MONACO TRANSMISSION SUPERVISING STATION									EVAC		MASS NOTIFICATION SYSTEM							
	AUDIO/VISUAL ALARM INDICATION BY DEVICE	AUDIO/VISUAL TROUBLE INDICATION BY DEVICE	AUDIO/VISUAL TROUBLE INDICATION BY DEVICE	SHUTDOWN AFFECTED AIR HANDLER	XMIT ALARM SIGNAL - PULL STATION SS	XMIT ALARM SIGNAL - FLOW SWITCH SS	XMIT ALARM SIGNAL - SMOKE DETECTOR TO SS	XMIT ALARM SIGNAL - DUCT DETECTOR TO SS	XMIT ALARM SIGNAL - ULTA-SENSITIVE TO SS	XMIT ALARM SIGNAL - CARBON MONOXIDE DETECTOR TO SS	XMIT SUPERVISORY SIGNAL TO SS	XMIT TROUBLE SIGNAL TO SS	FIRE PUMP STATUS THROUGH SS	GEN. EVAC. MESSAGE ENTERED VIA SS	EVACUATE BUILDINGS FOR MNS	SIE-EMERGENCY SERVICES FIRE ALARM SIGNAL	SILENCE LOC MICROPHONE	SILENCE LOC MICROPHONE & ALARM	PRE-REC. MESSAGE ENTERED VIA SS	LIVE VOICE THROUGHOUT	SUPERVISOR'S SIGNAL IE OVERRIDING FIRE ALARM
ALARM SIGNALS																							
MANUAL PULL STATION	X				X									X	X								
WATERFLOW SWITCHES	X					X								X	X								
SMOKE DETECTOR - FACP	X						X							X	X								
SMOKE DUCT DETECTOR	X			X				X						X	X								
CARBON MONOXIDE DETECTOR	X			X						X				X	X								
ULTRA -SENSITIVE SMOKE DETECTION SYSTEM	X								X														
SUPERVISORY SIGNALS																							
TAMPER SWITCHES		X										X											
MNS OVERRIDES FIRE ALARM		X										X											
SERVER ROOM TEMPERATURE SENSOR		X										X											
TROUBLE SIGNALS																							
FIRE ALARM AC POWER FAILURE			X										X										
FIRE ALARM SYSTEM LOW/MISSING BATTERY			X										X										
SHORT CIRCUIT			X										X										
OPEN CIRCUIT			X										X										
GROUND FAULT			X										X										
SUPERVISED COMPONENT FAILURE			X										X										
SUPERVISING STATION CONNECTION FAULT			X																				
MASS NOTIFICATION SIGNALS																							
ACU MICROPHONE ACTIVATION		X										X				X	X	X	X		X	X	
LOC MICROPHONE ACTIVATION		X										X				X	X		X		X	X	
ACU PRE-REC MESSAGE SWITCH		X										X				X	X		X	X		X	
LOC PRE-REC MESSAGE SWITCH		X										X				X	X		X	X		X	
WIDE AREA MNS - PRE-REC MESSAGE		X										X				X	X		X	X		X	
WIDE AREA MNS - LIVE VOICE		X										X				X	X		X		X	X	

QFPE REQUIREMENTS:
1. THE CONTRACTOR SHALL EMPLOY A QUALIFIED FIRE PROTECTION ENGINEER (QFPE) MEETING THE REQUIREMENTS OF UFC 3-600-01.
2. THE QFPE SHALLL REVIEW, SIGN, AND CERTIFY ALL FIRE PROTECTION AND LIFE SAFETY SYSTEMS INCLUDING: BUT, NOT LIMITED TO FIRE ALARM, MASS NOTIFICATION, AND SPRINKLER SYSTEMS INCLUDED WITHIN THE PROPOSED PROJECT.
3. ALL SHOP DRAWINGS/CALCULATIONS/MATERIAL SUBMITTALS FOR APPLICABLE LIFE SAFETY SYSTEMS MUST BE REVIEWED AND STAMPED BY THE CONTRACTOR'S QFPE IN ACCORDACE WITH SECTION 9-6.3 OF UFC 3-600-01.
4. THE QFPE MAY MAKE ADJUSTMENTS TO THE DEVICE LAYOUTS BASED ON CALCULATIONS AND LAYOUTS. THE INSTALLED SYSTEM MUST COMPLY WITH SPECIFICATION SECTION 28 311, UFC 3-600-01, UFC 4-021-01 NFPA 72 AND BASE-ASSIGNED REQUIREMENTS.
5. DURING CONSTRUCTION THE CONTRACTOR'S QFPE MUST VISIT THE SITE IN INTERVALS/QUANTITIES REQUIRED TO CERTIFY THAT THE SYSTEM HAS BEEN INSTALLED IN ACCORDANCE WITH THE PROJECT REQUIREMENTS. AT A MINIMUM, THE QFPE SHALL ATTEND/WITNESS THE ABOVE CEILING INSPECTION AND ATTEND/WITNESS FINAL ACCEPTANCE TESTING FOR ALL FIRE PROTECTION AND LIFE SAFETY SYSTEMS. ADDITIONAL SITE INSPECTIONS ARE AT THE DISCRETION OF THE CONTRACTOR'S QFPE. THE CONTRACTOR'S QFPE SHALL CERTIFY, IN WRITING, THAT THE SYSTEM HAS BEEN INSTALLED IN ACCORDANCE WITH PROJECT REQUIREMENTS. THE CONTRACTOR'S QFPR CERTIFICATION SHALL BE IN WRITING, ON COMPANY LETTERHEAD, AND INCLUDE THE QFPE'S REGISTRATION STAMP.
6. QFPE TO COORDINATE/FINALIZE MATRIX WITH BASE FIRE PRIOR TO SUBMITTING SHOP DRAWINGS.

STANLEY J. MCCARTER
ALABAMA
REGISTERED
No. 22753
PROFESSIONAL
ENGINEER
6-19-24

McCARTER ENGINEERING
ELECTRICAL ENGINEERING CONSULTANTS
PHONE: (256) 240-7335 878 AVALON LANE ANNISTON, AL 36207
M.E. JOB #2415

S|S&L
ARCHITECTURE & INTERIOR DESIGN
1115 South Governors Highway, Suite 104
Tel. 334.263.5162 | WWW.SSLARCH.COM

Rev.	Description	Date

Job Number 12072
Date JUNE 2024
Drawn By MWS
Checked By SJM
Project Title

New Security Building
117th Refueling Wing
Birmingham, AL

Sheet Title
BASE BID FIRST FLOOR AUXILIARIES PLAN

Sheet Number
E5.1

STATE OF ALABAMA
MONTGOMERY
Jim E. Davis, Jr. 5046
Gregory A. O'Neal 4045
Wesley E. Clemon 4241
ALABAMA
REGISTERED ARCHITECTS

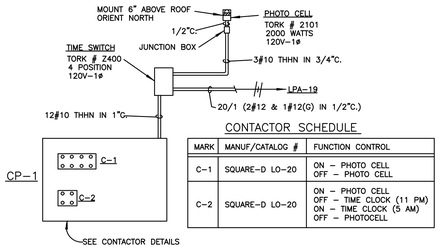

CONTACTOR SCHEDULE

MARK	MANUF/CATALOG #	FUNCTION CONTROL
C-1	SQUARE-D LO-20	ON – PHOTO CELL OFF – PHOTO CELL
C-2	SQUARE-D LO-20	ON – PHOTO CELL OFF – TIME CLOCK (11 PM) ON – TIME CLOCK (5 AM) OFF – PHOTOCELL

CONTACTOR PANEL DETAIL (CP-1)

N.T.S.

NOTES:

1. WIRE CONTACTORS TO TIME SWITCH TO ACHIEVE THE ABOVE CONTROL
2. ALL LEADS INTO THIS PANEL SHALL BE LONG ENOUGH TO REACH ANY TERMINAL ON ANY CONTACTOR, EXCESS CONDUCTORS SHALL BE LACED & ARRANGED NEATLY IN PANEL
3. LEAVE ROOM IN CONTACTOR PANEL (CP-1) FOR THE ADDITION OF ANOTHER FUTURE CONTACTOR
4. INSTALL SURFACE MOUNTED HOFFMAN BOX WITH 24"x24"x6" DEEP WITH HINGED COVER AND WOOD BACKING
5. CIRCUITS ON CONTACTOR C-2 SHALL GO OFF AT 11 P.M. AND BACK ON AT 5 AM WITH PHOTOCELL TURNING CONTACTOR OFF AT DAYBREAK. COORDINATE WITH OWNER.

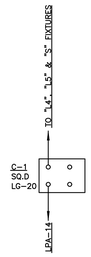

CONTACTOR (C-1) DETAIL

N.T.S.

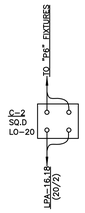

CONTACTOR (C-2) DETAIL

N.T.S.

NOTES:

1. THIS CONTACTOR AND CIRCUIT SHALL BE INSTALLED UNDER BID OPTION 1.

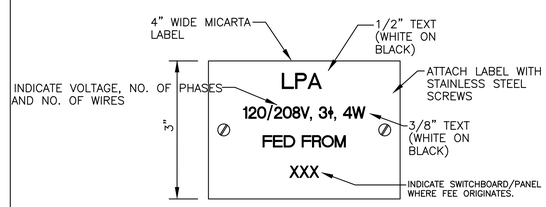

PANEL LABEL DETAIL

N.T.S. (TYPICAL)

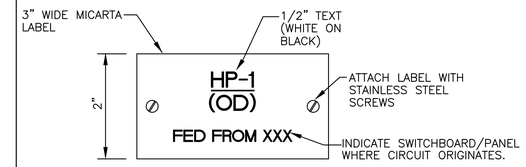

EQUIPMENT LABEL DETAIL

N.T.S. (TYPICAL)

NOTES:

1. INSTALL LABEL ON ALL DISCONNECTING MEANS FOR EACH PIECE OF EQUIPMENT.

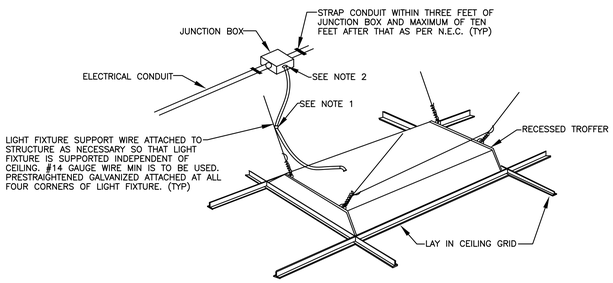

LAY-IN LIGHT FIXTURE SUPPORT DETAIL

N.T.S.

NOTES:

1. CONTRACTOR SHALL ATTACH FLEXIBLE CONDUIT WITH APRROVED STRAP OR HANGER PER THE SPECIFICATIONS. (TYP)
2. FLEXIBLE CONNECTION TO LIGHT FIXTURE. ATTACH TO STRUCTURE TO PREVENT FLEXIBLE CONDUIT FROM RESTING ON CEILING. ENSURE FLEXIBLE CONDUIT IS NO LONGER THAN SIX FEET FROM LIGHT FIXTURE TO JUNCTION BOX.

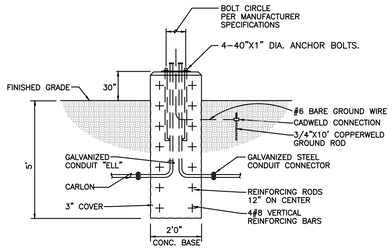

POLE BASE DETAIL

N.T.S. ("P6" FIXTURES)

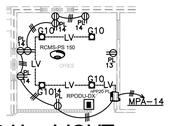

TYPICAL nLIGHT LIGHTING CONTROL DETAIL

SCALE: 1/8" = 1'-0"

NOTES:

1. NOTE THAT ONLY CONTROL WIRING FOR LIGHTING IS INDICATED, BUT CONTRACTOR SHALL UTILIZE THE LIGHTING CIRCUIT INDICATED IN EACH ROOM FOR 120V CIRCUIT TO FIXTURES.
2. ALL ROOMS SHALL BE SIMILAR. nLIGHT MODULES SHALL BE PROVIDED IN EACH FIXTURE AS IS INDICATED ON THE LIGHTING FIXTURE SCHEDULE.
3. "LV" INDICATES CAT. 5 CABLE ON THIS DETAIL.
4. CONTRACTOR SHALL PROVIDE AND INSTALL ALL PLUGLOAD POWER PACKS AS REQUIRED FOR EACH ROOM.
5. CONTRACTOR SHALL NOTE THAT ALL SWITCHES AND SENSORS ARE WIRELESS AND WILL NOT REQUIRE LOW VOLTAGE CABLING.

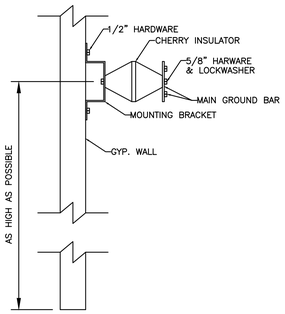

TMGB GROUND BAR MOUNTING DETAIL

N.T.S.

NOTES:

1. ALL HOLES SHALL BE COUNTERSUNK 1/16".
2. BAR STOCK SHALL BE 1/4" THICK COPPER.
3. BAR IS TINNED .0003" TYP. (.0002" MIN.) THICK.
4. COORDINATE EXACT LOCATION WITH TELECOMM CONTRACTOR.

COMMUNICATIONS CABLING LEGEND

20	DATA OUTLET, NUMBER AS NECESSARY (2 CAT. 6 DATA CABLES PULLED TO JUNCTION BOX AND TERMINATED ONTO JACKS IN A STAINLESS STEEL FACEPLATE. LEAVE 12" SLACK ON CABLE. ROUTE DATA CABLE TO MDF OR IDF AND TERMINATE.
20,1V	DATA/VOICE OUTLET, NUMBER AS NECESSARY (2 CAT. 6 DATA CABLES AND 1 CAT. 6 VOICE CABLE PULLED TO JUNCTION BOX AND TERMINATED ONTO JACKS IN A STAINLESS STEEL FACEPLATE. LEAVE 12" SLACK ON CABLE. ROUTE DATA CABLE TO MDF OR IDF AND TERMINATE. ROUTE VOICE CABLE TO 110 BLOCKS AND TERMINATE.
20,1C	DATA/COAX OUTLET, NUMBER AS NECESSARY (2 CAT. 6 DATA CABLES AND 1 RG6 CABLE CABLE PULLED TO JUNCTION BOX AND TERMINATED ONTO JACKS IN A STAINLESS STEEL FACEPLATE. LEAVE 12" SLACK ON CABLE. ROUTE DATA CABLE TO MDF OR IDF AND TERMINATE. ROUTE RG6 CABLE TO CCTV RACK AND TERMINATE.

OUTLET NUMBER:	ROOM NUMBER:
1A	101
MDF/IDF NAME:	PANEL #/PORT #
MDF	1/1

DATA CABLE LABEL DETAIL

N.T.S.

NOTES:

1. LABEL ALL CABLES AT EACH END.
2. EXACT LABEL METHOD SHALL BE COORDINATED WITH, AND APPROVED BY THE ENGINEER AND OWNER PRIOR TO PURCHASE AND INSTALLATION.

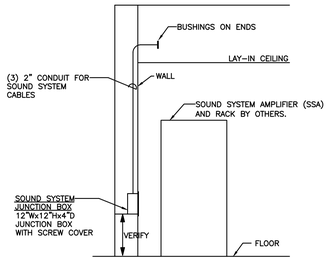

SSA DETAIL

N.T.S.

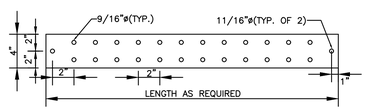

TMGB GROUND BAR DETAIL

N.T.S.

NOTES:

1. ALL HOLES SHALL BE COUNTERSUNK 1/16".
2. BAR STOCK SHALL BE 1/4" THICK COPPER.
3. BAR IS TINNED .0003" TYP. (.0002" MIN.) THICK.
4. LABEL BUS BARS WITH PERMANENT ENGRAVED NAMEPLATE.

6-19-24

McCARTER ENGINEERING
ELECTRICAL ENGINEERING CONSULTANTS
PHONE: (256) 240-7335
878 AVALON LANE
ANNISTON, AL 36207
M.E. JOB #2414

S|S&L
ARCHITECTURE & INTERIOR DESIGN
Montgomery | Dothan | Birmingham
(M) 334.263.5162 (D) 334.791.9356
WWW.SSLARC.COM

Rev.	Description	Date

Job Number: 12072
Date: JUNE 2024
Drawn By: MWS
Checked By: SJM
Project Title

New Security Building
117th Air Refueling Wing
Birmingham, AL

Sheet Title: ELECTRICAL DETAILS

Sheet Number: E6.1