SCOPE OF WORK

1. GEOTHERMAL CONTRACTOR SHALL FURNISH REFERENCES OF A MINIMUM OF THREE PREVIOUS PROJECTS THAT ARE COMPLETED AND OPERATING. THESE PROJECTS MUST BE VERTICAL BORE TYPE SYSTEMS WITH SIZE/CAPACITY EQUAL TO OR GREATER THAN THAT REQUIRED FOR THIS PROJECT. THIS INFORMATION MUST BE SUBMITTED AND APPROVED PRIOR TO RECEIPT OF BIDS FOR THIS PROJECT. THE FOLLOWING GEOTHERMAL CONTRACTORS HAVE MET THESE PRE-BID REQUIREMENTS.
   A. MidSouth Geothermal, LLC
      P.O. Box 171357
      Memphis, TN 38187
      Contact: Scott W. Triplett
      EMAIL: striplett@midsouthgeothermal.com
      Ph 901-748-9095
      Fx 901-748-9097
      Mob 901-237-4208
   B. Mid-State Construction Company
      9190 Bradford Hicks Drive
      Livington, TN 38570
      Contact: Doug Cravens
      EMAIL: doug@mid-stateconstruction.com
      Ph 931-403-6406 Direct
      Of 931-823-7345
      Mob 931-261-1373
   C. Midwest Geothermal
      4546 Roger B Chaffee Blvd. SE
      Grand Rapids, MI 49548
      Contact: Kortney Lull
      EMAIL: kortney@mwgeothermal.com
      Ph 616-466-5743 Direct
      Of 616-514-1101 Main
      Fx 616-514-1125

2. THE WORK INCLUDES BUT IS NOT LIMITED TO THE FOLLOWING:
   A. 6 VERTICAL LOOP FIELDS WITH 20 BORES.
   B. HDPE VAULT FOR FIELD CONNECTIONS
   C. HEAT EXCHANGER LOCATED AND SHOWN ON THE MECHANICAL PLANS. THE EXTENT OF INTERIOR HDPE PIPING IS SHOWN ON THE MECHANICAL PLANS. COORDINATION WITH THE HVAC CONTRACTOR WILL BE REQUIRED FOR FINAL LOCATION OF THE INDOOR HEAT EXCHANGER, HEADER, VALVES, ETC.
   D. 8" HDPE SUPPLY AND RETURN MAINS FROM THE VAULT TO THE BUILDING.
   E. PIPING, FITTINGS, VALVES, ETC. AS INDICATED ON THE PLANS OR REQUIRED FOR A COMPLETE AND FUNCTIONAL GEOTHERMAL SYSTEM.

3. ALL LOOP PIPING INCLUDING PIPING WITHIN THE VAULT SHALL BE PIPED AS A REVERSE RETURN SYSTEM THAT DOES NOT REQUIRE BALANCING.

4. THE GEOTHERMAL PIPING SYSTEM SHALL BE INSTALLED IN ACCORDANCE WITH THE MANUFACTURER'S RECOMMENDATIONS, THE PLASTICS PIPE INSTITUTE CHAPTER 7 MANUAL AND PLASTIC PIPE INSTITUTE TN-55, 2018.

5. EACH BORE REQUIRES IDENTIFICATION AND LOCATION AS REQUIRED ON RGT1.1, HDPE LOOP FIELD SITE PLAN NOTES.

6. FINAL SUBMITTALS FOR AS-BUILT DRAWINGS SHALL ALSO INCLUDE GPS COORDINATES FOR EACH VERTICAL BORE HOLE.

7. THE SCOPE OF WORK FOR BACK FILL SHALL INCLUDE RETURNING THE SITE TO THE CONTOURS SHOWN ON THE REVISED CIVIL PLANS. COORDINATION WITH THE SITE CONTRACTOR WILL BE REQUIRED.

8. THE HDPE VAULT SHALL BE FACTORY FABRICATED AND PRESSURE TESTED. MANUFACTURER SHALL BE ISCO INDUSTRIES OR AN APPROVED EQUAL. VAULT SHALL INCLUDE SWITCHES FOR INTERIOR LIGHTING AND INTERIOR SUMP PUMP FOR POSSIBLE WATER REMOVAL. UNIT SHALL INCLUDE MANHOLE, LADDERS, METERS, GAUGES, ETC, AS SHOWN ON GT1.01. COORDINATION WITH THE BUILDING AUTOMATION SYSTEM DIRECT DIGITAL CONTROLS CONTRACTOR WILL BE REQUIRED FOR REQUIRED FITTING LOCATIONS. THE HDPE VAULT DRAWINGS IN AUTODESK AUTOCAD AND PDF FORMAT SHALL BE SUBMITTED FOR APPROVAL TO THE ENGINEER OF RECORD. VAULT SHALL ALSO INCLUDE PROVISIONS FOR A 3" FLUSHING CONNECTION TO FLUSH LOOPS.

9. THE GEOTHERMAL LOOP CONTRACTOR SHALL PROVIDE UNIT PRICING FOR THE FOLLOWING ITEMS:
   a. UNIT PRICE FOR ADDING OR DELETING STEEL CASING PER FOOT OF DEPTH.
   b. UNIT PRICE FOR ADDING OR DELETING VERTICAL BORE PER FOOT OF DEPTH. THIS SHALL INCLUDE PIPE, GROUT, ETC.

FAILURE TO PROVIDE THE UNIT PRICING WILL RESULT IN REJECTION OF THE CONTRACTOR'S PROPOSAL.

LOOP FIELD SITE PLAN NOTES

1. ALL NEW BORES WILL BE APPROXIMATELY 5"ø WITH 1-1/4" POLYETHYLENE TUBING WITH BORE CENTERS AT 25'-0". BORE DEPTH SHALL BE 500 FEET.

2. MINIMUM COVER DEPTH OF ALL PIPING SHALL BE 60". REFERENCE TYPICAL BOREHOLE AND PIPE INSTALLATION DETAIL.

3. BEDDING FOR GROUND LOOP PIPING SHALL BE AS NOTED BELOW.
   3.1. FILL BOTTOM OF TRENCH WITH 6" OF SAND.
   3.2. INSTALL SUPPLY PIPING. PIPING SHALL NOT BE PLACED ON TOP OF ANOTHER PIPE.
   3.3. INSTALL 6" OF SAND COVER OVER SUPPLY PIPING.
   3.4. INSTALL RETURN PIPING TO LOOP FIELD OVER SUPPLY WHERE REQUIRED.
   3.5. INSTALL 6" OF SAND COVER OVER RETURN PIPING.
   3.6. HAND TAMP FOR COMPACTION OF SAND AND COMPLETE FILLING OF TRENCH IN ACCORDANCE WITH SPECIFICATIONS. MIN. GROUT/FILL CONDUCTIVITY 0.9 BTU/HR-FT-F.
   * NOTE: LIMESTONE SCREENINGS (1/4" AND LESS) MAY BE SUBSTITUTED FOR SAND.

4. ALL REVERSE RETURN PIPING AT BORES SHALL BE PRE-FABRICATED BY MANUFACTURER AND DELIVERED TO THE PROJECT SITE READY FOR INSTALLATION.

5. PIPING SHALL BE PE4710, HDPE, DR11 OR APPROVED EQUAL. DOWN HOLE PIPING ON COILS SHALL BE PRE-TESTED BY VENDOR OR MANUFACTURER. TEST RESULTS SHALL BE SUBMITTED.

6. HDPE PIPING JOINTS SHALL BE BUTT OR SOCKET FUSION JOINTS. SADDLE JOINTS WILL NOT BE ALLOWED. STAB FITTINGS ARE ALLOWABLE SUBSTITUTE FOR FUSION.

7. EACH BORE U-TUBE SHALL BE UNI-COIL PRE-FUSED INJECTION MOLDED U-BEND FITTING WITH POLYWING ANCHOR.

8. ALL PIPING SHALL BE INSTALLED IN STRICT ACCORDANCE WITH MANUFACTURER'S RECOMMENDATIONS.

9. INSTALLATION SHALL BE IN ACCORDANCE WITH ASHRAE 90.1-2022, AND ASHRAE PUBLICATION "GEOTHERMAL HEATING AND COOLING: DESIGN OF GROUND-SOURCE HEAT PUMP SYSTEMS", STEPHEN P. KAVANAUGH AND KEVIN RAFFERTY.

10. FURNISH AND INSTALL ISCO OR APPROVED EQUAL GEOTHERMAL UNDER-GROUND DETECTABLE TAPE 16" BELOW GRADE FOR ALL BELOW GRADE PIPING.

11. FURNISH AND INSTALL 3M DYNATEL ELECTRONIC MARKER SYSTEM WITH 4" BALL MARKER SYSTEM. SYSTEM SHALL BE: FULL RANGE FOR UP TO 5 FT. DEPTH, AND COLOR CODED. MARKERS SHALL BE INSTALLED AT EACH BORE LOCATION AND AT 50 FEET CENTERS ALONG TRENCHES AS WELL AS AT MAIN BEND LOCATIONS. SYSTEM SHALL INCLUDE 3M DYNATEL ELECTRONIC MARKER MODEL 2250M-ID LOCATOR WITH GPS INTERFACE . MARKERS SHALL BE 3M BALL MARKER MODEL 1423-XR/ID.

VERTICAL BORE INSTALLATION AND BACKFILL SPECIFICATIONS

DRILLING:

VERTICAL BORES SHALL BE DRILLED TO SUFFICIENT DEPTHS TO INSURE THAT THE ENTIRE LENGTH OF U-TUBE IS INSERTED. THIS MAY REQUIRE THE BORE TO BE DRILLED SEVERAL FEET DEEPER THAN THE U-TUBE LENGTH. VERTICAL BORES SHALL BE DRILLED SO THE RESULTING BORE DIAMETER IS LESS THAN 1.00 INCH LARGER THAN THE U-TUBE WIDTH, IF THE THERMAL CONDUCTIVITY OF THE BACKFILL OR GROUT IS LESS THAN 80% OF THE NATURAL SOIL OF ROCK CONDUCTIVITY.

INSPECTION:

ALL U-TUBE JOINTS SHALL BE VISUALLY INSPECTED FOR INTEGRITY AS SPECIFIED BY THE PIPE MANUFACTURER (ALIGNMENT OF JOINTS, PROPER BEAD ROLL-BACK) BEFORE INSERTION INTO THE BORE HOLE.

GROUT:

THE BORE HOLE ANNULUS SHALL BE BACKFILLED OR GROUTED TO INSURE THERE ARE NO AIR VOIDS. IN CONSOLIDATED FORMATIONS THIS WILL REQUIRE THE BORE ANNULUS TO BE FILLED FROM THE BOTTOM TO THE TOP WITH A "TREMIE" TUBE. THE ENTIRE BORE ANNULUS SHALL BE GROUTED WITH A MATERIAL HAVING A PERMEABILITY OF .0000001 CM/SEC OR LESS TO INHIBIT SURFACE WATER PENETRATION INTO THE FORMATION. AQUIFERS THAT ARE POLLUTED OR HAVE UNACCEPTABLE WATER QUALITY MUST BE ISOLATED FROM AQUIFERS OF ACCEPTABLE DRINKING WATER QUALITY BY INSERTING A TWENTY FOOT SECTION OF GROUT HAVING A PERMEABILITY OF .0000001 CM/SEC OR LESS INTO THE BORE ANNULUS ABOVE AND BELOW THE LOW WATER QUALITY AQUIFER. OTHER METHODS OF ISOLATION RECOMMENDED BY THE NATIONAL GROUND WATER ASSOCIATION (NGWA) ARE ALSO ACCEPTABLE. GROUT TO BE HIGH SOLIDS BENTONITE THERMAL GROUT (OR APPROVED EQUAL) WITH A THERMAL CONDUCTIVITY OF 1.20 BTU/HR-FT-°F.

PURGING / TESTING:

U-TUBES ARE TO BE THERMALLY FUSED TO THE HORIZONTAL SUPPLY AND RETURN HEADERS IN THE TRENCH. THE ASSEMBLY IS TO BE FILLED WITH WATER (OR WATER/ANTIFREEZE SOLUTION) AND PURGED AT A FLOW RATE THAT INSURES THAT THE VELOCITY IN ALL SECTIONS OF PIPING EXCEEDS TWO (2) FEET PER SECOND (FPS). AFTER PURGING, THE U-TUBE AND HEADER ASSEMBLIES SHOULD BE PRESSURIZED TO 60 PSIG AND MAINTAIN PRESSURE FOR A PERIOD OF ONE HOUR. AFTER PRESSURE TESTING THE HEADERS SHALL BE BACKFILLED WITH SAND OR ROCK-FREE NATURAL FILL.

HDPE PIPE SPECIFICATIONS

SCOPE:

THIS SPECIFICATION DESIGNATES REQUIREMENTS FOR GEOTHERMAL (GROUND SOURCE HEAT PUMP) PIPE AND FITTINGS.

MATERIAL:

ALL PIPE AND HEAT FUSED MATERIALS SHALL BE MANUFACTURED FROM HIGH DENSITY, EXTRA-HIGH MOLECULAR WEIGHT PE 4710, DR 11 MATERIAL. THE MATERIAL SHALL HAVE A 1600 PSI HYDROSTATIC DESIGN BASIS AT 73.4 DEGREES F PER ASTM D-2837, AND SHALL BE LISTED IN PPI TR4 AS A PE 4710, DR 11 PIPING FORMULATION. THE MATERIAL SHALL HAVE A CELL CLASSIFICATION OF 445574C OR GREATER AS SPECIFIED IN ASTM D3350.

PIPE:

THE EXTRUDED PIPE SHALL CONFORM TO THE SPECIFICATIONS AND REQUIREMENTS OF ASTM D-3035 FOR PIPE SIZES FROM 1/2" THROUGH 12" IPS. PIPE SIZES LARGER THAN 12" IPS SHALL CONFORM TO THE SPECIFICATIONS AND REQUIREMENTS OF ASTM F714. CLEAN REWORK MATERIAL FROM THE MANUFACTURER'S OWN PRODUCTION MAY BE USED PROVIDE DTHE PIPE OR FITTINGS MEET ALL REQUIREMENTS OF THIS SPECIFICATION. RECYCLED AND RECLAIMED MATERIALS FROM OUTSIDE THE MANUFACTURER'S PLANT SHALL NOT BE USED. PIPE USED FOR VERTICAL BORE APPLICATIONS SHALL INCLUDE A FUSED, SINGLE, PIECE, INJECTION MOLDED U-BEND POLYWING FITTING. THE APPROVED PIPE PRODUCT IS PE 4710, DR 11. UNLESS APPROVED BEFORE BIDS, PIPING SHALL BE MADE IN USA.

FITTINGS:

MOLDED FITTINGS SHALL BE MANUFACTURED TO THE SPECIFICATIONS AND REQUIREMENTS OF ASTM D-2683 FOR SOCKET FITTINGS, ASTM D-3261 FOR BUTT FITTINGS. ALL FITTINGS SHALL BE RATED FOR PRESSURE SERVICE EQUIVALENT TO SDR 11 PE 4710, DR 11 PIPE. FIELD FABRICATED AND INSTALLED SADDLE FITTINGS OR JOINTS SHALL NOT BE ALLOWED EXCEPT WITH ENGINEER OF RECORD WRITTEN APPROVAL.

JOINTS:

THE APPROVED JOINTS ARE HEAT FUSION, FLANGING, TRANSITION FITTINGS AND PROOF-TESTED APPROVED MECHANICAL "COUPLERS". FUSION JOINTS SHALL BE MADE BY TRAINED AND QUALIFIED CONSTRUCTION CREW STAFF. FIELD FABRICATED AND INSTALLED SADDLE FITTINGS OR JOINTS SHALL NOT BE ALLOWED EXCEPT WITH ENGINEER OF RECORD WRITTEN APPROVAL.

MANUFACTURER:

THE PIPE AND FITTINGS MANUFACTURER SHALL HAVE IN PLACE A FUNCTIONAL QUALITY ASSURANCE PROGRAM. SUCH QC/QA PROGRAMS SHALL DEAL WITH QUALITY AND WORKMANSHIP, OA VERIFICATION, OA REJECTION AND HAVE OA RECORD RETENTION SYSTEMS IN PLACE.

MARKING:

EACH PIPE SHALL BE PERMANENTLY INDENT MARKED WITH THE MANUFACTURER'S NAME, NOMINAL SIZE, PRESSURE RATING, RELEVANT ASTM STANDARDS, CELL CLASSIFICATION NUMBER AND DATE OF MANUFACTURER. EACH FITTING SHALL BE IDENTIFIED WITH THE MANUFACTURER'S NAME, NOMINAL SIZE, PRESSURE RATING, RELEVANT ASTM STANDARDS AND LOT NUMBER.

PACKAGING, HANDLING, AND STORAGE:

THE PIPE AND FITTINGS SHALL BE PACKAGED, HANDLED AND STORED IN ACCORDANCE WITH THE APPROVED MANUFACTURER'S GENERAL GUIDANCE AND RECOMMENDATIONS.

INSTALLATION:

CONSTRUCTION AND INSTALLATION SHALL BE IN GENERAL COMPLIANCE WITH ASTM D2321 FOR TRENCH CONSTRUCTION, EMBEDMENT MATERIAL, BEDDING, HAUNCHING, INITIAL BACKFILL AND FINAL COVER. FOR VERTICAL BORE-HOLES, THE IGSHPA GUIDELINES, THE SITE CONTRACTOR AND ENGINEER SHALL DETERMINE THE BACKFILL/EMBEDMENT.

HYDROSTESTING AND COMMISSIONING:

THE COMPLETED SYSTEM SHALL BE TESTED PER MANUFACTURER'S RECOMMENDATIONS.

PIPE FUSION METHODS:

POLYETHYLENE PIPE SHALL BE JOINED BY A HEAT FUSION PROCESS . POLYETHYLENE PIPE AND FITTINGS SHALL BE HEAT FUSED BY BUTT, SOCKET, SIDEWALL, OR ELECTROFUSION IN ACCORDANCE WITH PIPE MANUFACTURER'S PROCEDURES. FUSED TRANSITION FITTINGS WITH RE-ENFORCED THREADS SHALL BE USED TO ADAPT TO METAL OR RE-ENFORCED HOSE CONNECTION FITTINGS. BARBED FITTINGS ARE NOT AN ACCEPTABLE TRANSISTION TO POLYETHYLENE PIPE. ALL FUSION JOINTS SHALL BE MADE BY AN IGSHPA (OR EQUIVALENT) CERTIFIED LOOP CONTRACTOR WITH THREE YEARS EXPERIENCE OR IN EXCESS OF 1,000 TONS OF LEAK-FREE, HDPE, CLOSED-LOOP GROUND SOURCE HEAT PUMP INSTALLATIONS.

GEOTHERMAL DRAWING INDEX

SHEET NO.	SHEET TITLE
RGT1.1	GEOTHERMAL LOOP FIELD NOTES
RGT1.2	GEOTHERMAL DETAILS
RGT2.1	GEOTHERMAL LOOP FIELD SITE PLAN
RGT2.2	GEOTHERMAL LOOP FIELD RISER DIAGRAM

GEOTHERMAL LOOP FIELD NOTES

WHORTON ENGINEERING, INC.
HVAC – PLUMBING – PROCESS CONTROL
RANDALL WHORTON, P.E.
PHONE: (256) 820-9897
25 SUMMERALL GATE ROAD
ANNISTON, ALABAMA 36205

WHORTON ENGINEERING PROJECT NO. 22164

SS&L ARCHITECTS
Montgomery | Dothan | Auburn | Huntsville | Pensacola
WWW.SSLARCH.COM | 256.285.1063

Rev.	Description	Date

Job Number: 21112
AL ARNG IFB #: AC-25-B-0006-S
Date: NOVEMBER 1, 2024
Drawn By: RLJ
Checked By: RDW
Project Title:

HUNTSVILLE READINESS CENTER
5180 MOORE'S MILL ROAD
HUNTSVILLE AL, 35811

Sheet Title: GEOTHERMAL LOOP FIELD NOTES

Sheet Number: RGT1.1

STATE OF ALABAMA
No.14192
PROFESSIONAL
ENGINEER
RANDALL D. WHORTON
11-05-2024

8" MAIN WITH (10) 4" CIRCUITS

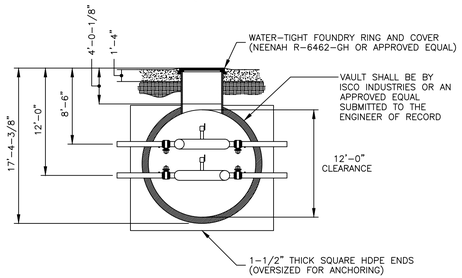

END VIEW

(LADDER NOT SHOWN FOR CLARITY)

TYPICAL SENSORS ON EACH 3" SUPPLY AND RETURN: INSTALL DDC TEMPERATURE SENSOR IN EACH CIRCUIT ENTERING AND LEAVING) WITHIN VAULT.

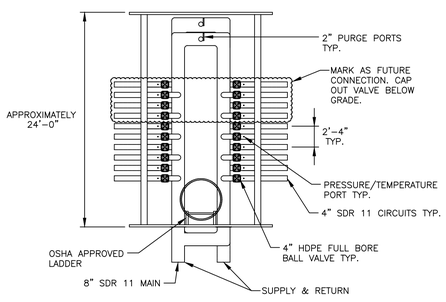

TOP VIEW

GEOTHERMAL VAULT STRUCTURE

NOT TO SCALE

QTY : ZONES 1 - 6; 20 BORES @ 500 FT. DEEP

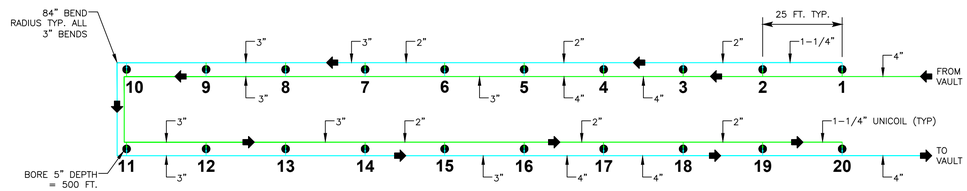

TYPICAL ZONE/CIRCUIT - GEOTHERMAL FIELD LAYOUT DIAGRAM

NOT TO SCALE

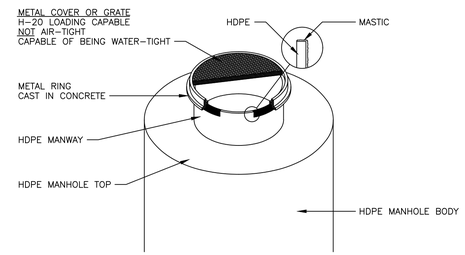

NOTE:
MANHOLE DETAIL WILL VARY PER JOB. MASTIC WALL THICKNESS WILL BE DETERMINED BY VOID BETWEEN MANWAY OPENING AND FOUNDRY RING. MASTIC SHOULD TYPICALLY BE 1/2" THICK ON THE TOP SIDE OF MANWAY OPENING. CONCRETE PAD MUST BE DESIGNED BY A PE USING ASTM F-1759 IN ORDER TO BE H-20 LOAD CAPABLE.

FOUNDRY CONNECTION COVER DETAIL

NOT TO SCALE

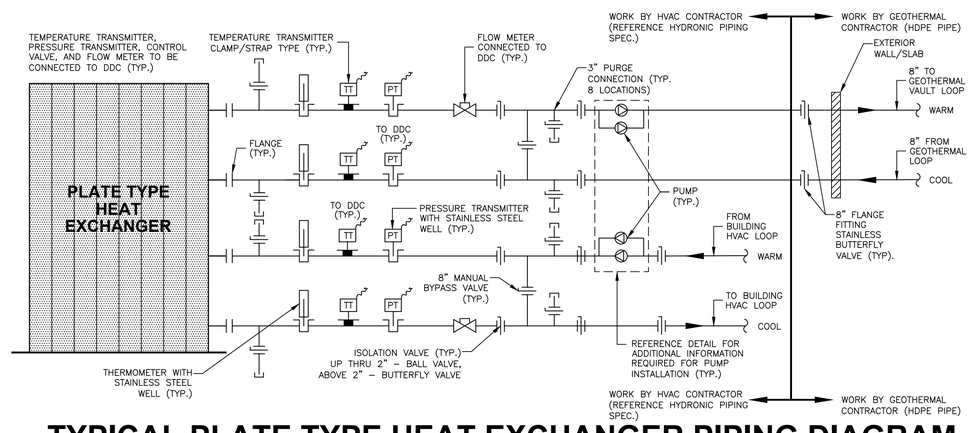

TYPICAL PLATE TYPE HEAT EXCHANGER PIPING DIAGRAM

NOT TO SCALE

COORDINATE DEPTH WITH ALL OTHER UTILITIES IN AREA SUCH AS UNDERGROUND ELECTRICAL, COMMUNICATIONS, STORM, WATER, AND WASTE PIPING.

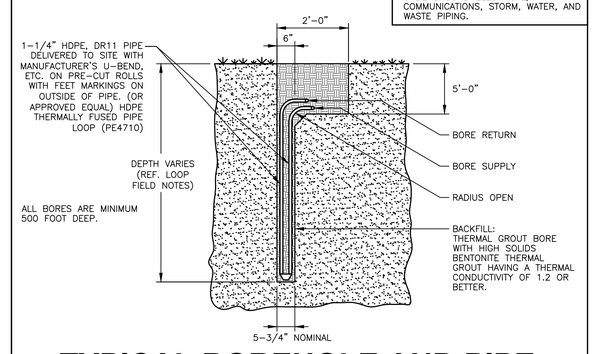

TYPICAL BOREHOLE AND PIPE INSTALLATION

NOT TO SCALE

GEOTHERMAL DETAILS

WHORTON ENGINEERING, INC.
HVAC - PLUMBING - PROCESS CONTROL
RANDALL WHORTON, P.E.
PHONE: (256) 820-9897
25 SUMMERALL GATE ROAD
ANNISTON, ALABAMA 36205

WHORTON ENGINEERING PROJECT NO. 22164

ALABAMA LICENSED PROFESSIONAL ENGINEER No.14192 RANDALL D. WHORTON
11-05-2024

S|S&L ARCHITECTS
Montgomery | Dothan | Auburn | Huntsville | Pensacola
WWW.SSLARCH.COM | 256.285.1063

Rev.	Description	Date

Job Number: 21112
AL ARNG IFB #: AC-25-B-0006-S
Date: NOVEMBER 1, 2024
Drawn By: RLJ
Checked By: RDW

Project Title:
HUNTSVILLE READINESS CENTER
5180 MOORE'S MILL ROAD
HUNTSVILLE AL, 35811

Sheet Title: GEOTHERMAL DETAILS

Sheet Number: RGT1.2

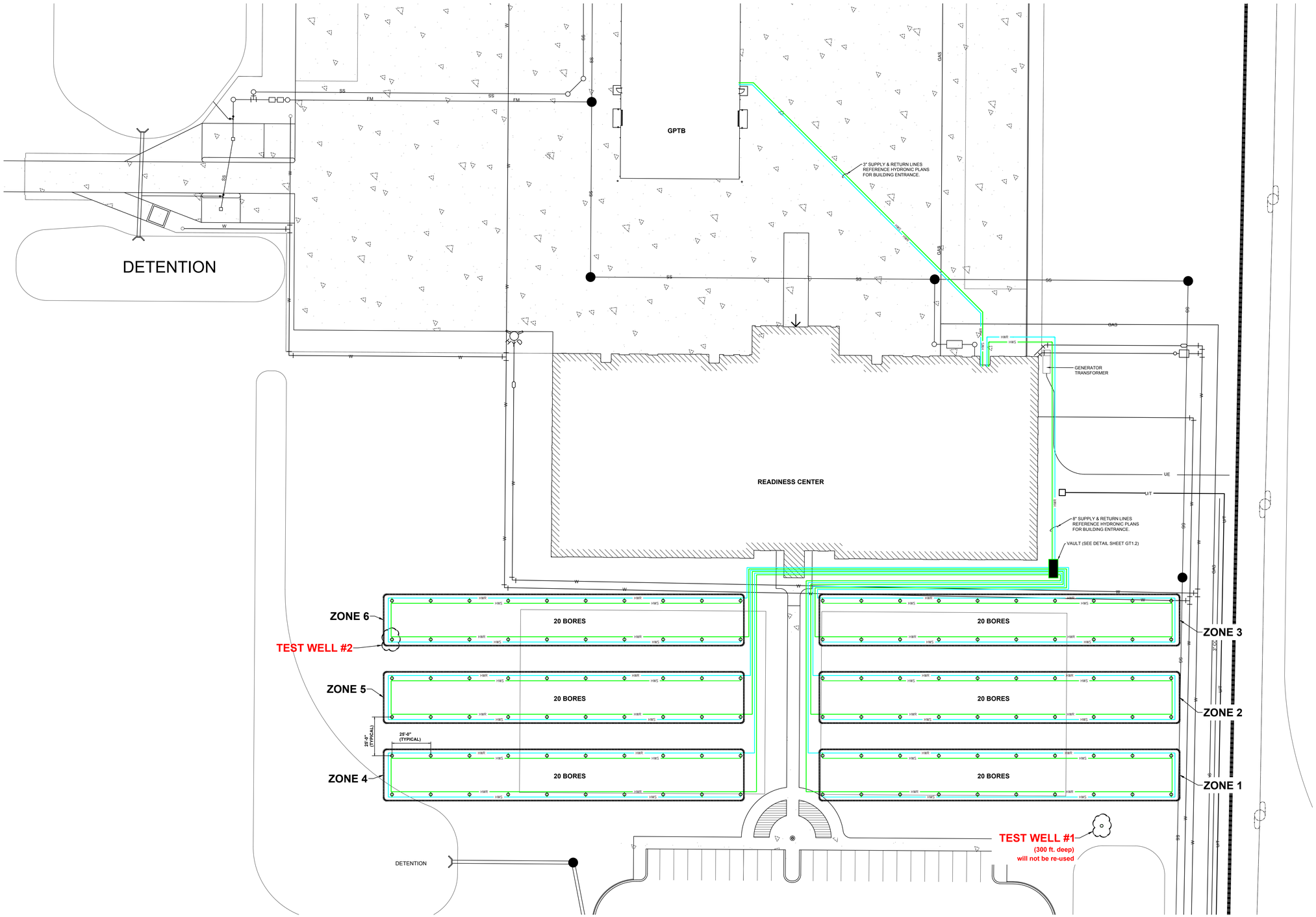

NOTE: COORDINATE ALL GEOTHERMAL PIPING WITH STORM SEWER AND UTILITY PLANS. INSTALL GEOTHERMAL PIPING TO AVOID ANY CONFLICTS. CONSULT ENGINEER TO RESOLVE ANY CONFLICT. UTILITY PLAN SHOWN FOR COORDINATION ONLY, REFER TO CIVIL PLANS.

GEOTHERMAL LOOP FIELD SITE PLAN

SCALE: 1" = 30'-0"

60 0 30 60 120

(IN FEET)

WHORTON ENGINEERING, INC.

HVAC – PLUMBING – PROCESS CONTROL

RANDALL WHORTON, P.E.
PHONE: (256) 820-9897

25 SUMMERALL GATE ROAD
ANNISTON, ALABAMA 36205

WHORTON ENGINEERING PROJECT NO. 22164

S|S&L ARCHITECTS
Montgomery | Dothan | Auburn | Huntsville | Pensacola
WWW.SSLARCH.COM | 256.285.1063

Rev.	Description	Date

Job Number: 21112

AL ARNG IFB #: AC-25-B-0006-S

Date: NOVEMBER 1, 2024

Drawn By: RLJ

Checked By: RDW

Project Title

HUNTSVILLE READINESS CENTER
5180 MOORE'S MILL ROAD
HUNTSVILLE AL, 35811

Sheet Title: GEOTHERMAL LOOP FIELD SITE PLAN

Sheet Number: RGT2.1

ALABAMA RANDALL D. WHORTON No.14192 PROFESSIONAL ENGINEER

11-05-2024

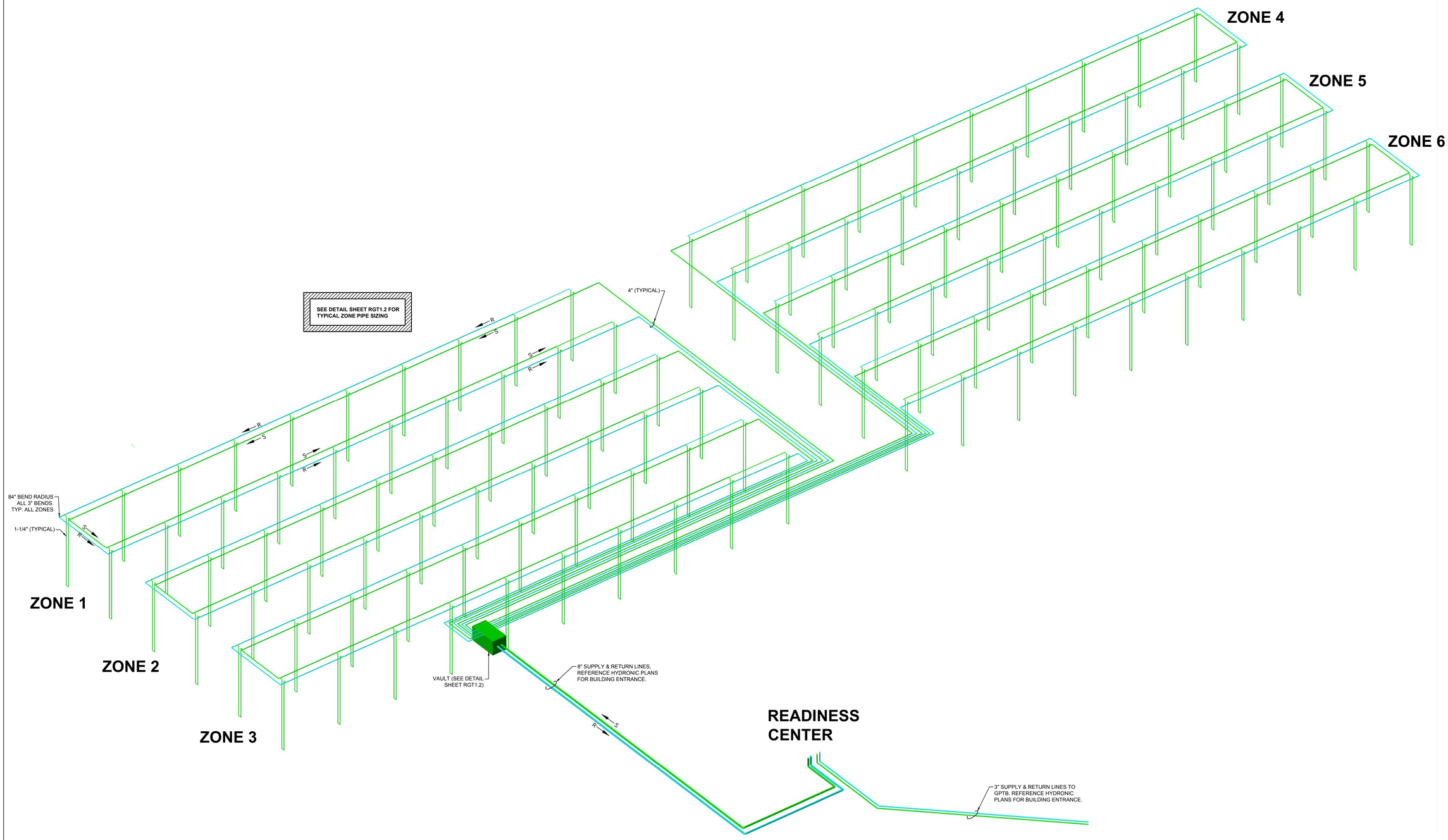

GEOTHERMAL LOOP FIELD RISER DIAGRAM

SCALE: NOT TO SCALE

WHORTON ENGINEERING, INC.
HVAC – PLUMBING – PROCESS CONTROL
RANDALL WHORTON, P.E.
PHONE: (256) 820-9897
25 SUMMERALL GATE ROAD
ANNISTON, ALABAMA 36205

WHORTON ENGINEERING PROJECT NO. 22164

SS&L ARCHITECTS
Montgomery | Dothan | Auburn | Huntsville | Pensacola
WWW.SSLARCH.COM | 256.285.1063

Rev.	Description	Date

Job Number: 21112
AL ARNG IFB #: AC-25-B-0006-S
Date: NOVEMBER 1, 2024
Drawn By: RLJ
Checked By: RDW

Project Title
HUNTSVILLE READINESS CENTER
5180 MOORE'S MILL ROAD
HUNTSVILLE AL, 35811

Sheet Title
GEOTHERMAL LOOP FIELD RISER DIAGRAM

Sheet Number
RGT2.2

ALABAMA REGISTERED No.14192 PROFESSIONAL ENGINEER RANDALL D. WHORTON
11-05-2024

READINESS CENTER
HVAC NOTES

1. ALL DUCT DIMENSIONS SHOWN ARE NET INTERNAL.
2. INSTALL OPPOSED BLADE BALANCING DAMPERS IN ALL NEW DIFFUSERS AND GRILLES.
3. THESE DRAWINGS ARE SCHEMATIC IN NATURE AND ARE NOT INTENDED TO SHOW ALL POSSIBLE CONDITIONS. IT IS INTENDED THAT A COMPLETE HVAC SYSTEM BE PROVIDED WITH ALL NECESSARY EQUIPMENT, APPURTENANCES, AND CONTROLS, COMPLETELY COORDINATED WITH ALL DISCIPLINES. ALL REQUIREMENTS OF THESE DOCUMENTS SHALL BE STRICTLY CONFORMED WITH. ANY ITEMS AND LABOR REQUIRED FOR A COMPLETE HVAC SYSTEM IN ACCORDANCE WITH ALL APPLICABLE CODES, STANDARDS, AND THESE CONTRACT DOCUMENTS SHALL BE FURNISHED WITHOUT INCURRING ANY ADDITIONAL COST TO THE CONTRACT. CAREFULLY REVIEW ALL CONTRACT DOCUMENTS AND THE DESIGN OF OTHER TRADES BEFORE PREPARING SHOP DRAWINGS.
4. COORDINATE DUCTWORK AND PIPING WITH STRUCTURAL, PLUMBING, FIRE PROTECTION AND ELECTRICAL. MAKE OFFSETS AND TRANSITIONS AS REQUIRED TO CLEAR STRUCTURAL MEMBERS, ETC. COORDINATE WITH OTHER TRADES WITHOUT ADDITIONAL EXPENSE TO THE OWNER.
5. REFER TO ARCHITECTURAL CEILING PLANS FOR EXACT LOCATION OF ALL CEILING MOUNTED AIR DISTRIBUTION DEVICES; COORDINATE EXACT LOCATION OF GRILLES, REGISTERS, AND DIFFUSERS WITH ARCHITECTURAL AND INTERIOR REFLECTED CEILING PLANS AND LIGHTING FIXTURES. FOR PARTICULAR ITEMS NOT SHOWN ON THE ARCHITECTURAL REFLECTED CEILING PLAN, PREPARE A DRAWING AND PRESENT IT TO THE ARCHITECT FOR REVIEW AND/OR APPROVAL.
6. COORDINATE ALL ROOF AND SLAB PENETRATIONS WITH THE STRUCTURAL ENGINEER. TRANSITIONS RECTANGULAR DUCTWORK ON THE BOTTOM AND THE SIDES. MAINTAIN DUCTWORK LEVEL AS HIGH AS POSSIBLE UNLESS NOTED OTHERWISE.
7. THE HVAC CONTRACTOR IS TO REVIEW THE ENTIRE SET OF PLANS FOR COORDINATION WITH OTHER TRADES. SHOP DRAWINGS WITH ALL TRADES COORDINATED WILL BE REQUIRED.
8. THE HVAC CONTRACTOR SHALL REVIEW THE ARCHITECTURAL PLANS FOR FINAL LOCATIONS OF ALL RATED WALLS, CEILINGS, FLOORS, ETC. THE HVAC CONTRACTOR SHALL FURNISH AND INSTALL FIRE OR FIRE/SMOKE DAMPERS IN ALL RATED LOCATIONS WHETHER SHOWN ON THE MECHANICAL PLANS OR NOT.
9. CONTRACTOR SHALL COORDINATE VOLTAGE AND PHASE OF EACH PIECE OF EQUIPMENT WITH THE ELECTRICAL CONTRACTOR PRIOR TO ORDERING.
10. ALL THREE PHASE EQUIPMENT SHALL BE EQUIPPED WITH PHASE LOSS PROTECTION.
11. ALL MOTOR STARTERS SHALL BE FURNISHED BY THE MECHANICAL CONTRACTOR.
12. CONTRACTOR TO COORDINATE ALL CEILING TYPES WITH DIFFUSERS. ALL DIFFUSERS IN GYPSUM CEILING SHALL INCLUDE PLASTER FRAME.
13. ALL DISTRIBUTION DEVICES SHALL HAVE FACE OPERABLE DAMPERS. ALL DIFFUSER RUNOUTS SHALL INCLUDE SPIN-IN WITH DAMPER IN ROUND DUCTS.
14. INSULATE TOP SIDE/BACK OF ALL DIFFUSERS/GRILLES, ETC.
15. CONDENSATE DRAIN PIPING SHALL BE SLOPED A MINIMUM OF 1/8" PER FOOT AND SHALL BE SIZED PER TABLE 307.2.2 IN THE 2021 INTERNATIONAL MECHANICAL CODE UNLESS SHOWN LARGER ON PLANS.
16. ALL 3/4" AND 1" CONDENSATE DRAIN TRAPS SHALL BE EZ-TRAP OR APPROVED EQUAL WITH FLOAT SWITCH.
17. INSTALL AUXILIARY DRAIN PAN UNDER ALL UNITS MOUNTED IN ATTIC, ABOVE CEILINGS, ETC. INSTALL WET SWITCH FOR UNIT SHUT DOWN IN AUXILIARY DRAIN PAN – DIVERSITECH "WET SWITCH" CONDENSATE DETECTION SWITCH OR APPROVED EQUAL.
18. REFERENCE PLUMBING PLANS FOR CONDENSATE PIPING. IF CONDENSATE DRAINS ARE NOT SHOWN ON THE PLUMBING PLANS, ALL CONDENSATE DRAINS SHALL BE FURNISHED AND INSTALLED BY THE HVAC CONTRACTOR.
19. VERIFY WITH THE ARCHITECTURAL DRAWINGS, SIZE, LOCATION, AND MOUNTING HEIGHT OF ALL LOUVERS. VERIFY COLOR AND FINISH WITH OWNER.
20. ALL UNUSED PORTION OF LOUVERS SHALL BE CAPPED OFF WITH 1" INSULATED ALUMINUM AND SEALED AIR/WATER TIGHT.
21. UNLESS OTHERWISE NOTED, UNITS SHALL INCLUDE A HONEYWELL SPYDER PUL6438SR (OR EQUAL) PROGRAMMABLE CONTROLLER WITH HONEYWELL SYLK I/O MODULES OR EQUAL) AS REQUIRED TO PROVIDE THE CONTROL POINTS AS LISTED IN THE POINTS MATRIX. WALL MODULES SHALL BE COMMUNICATING HONEYWELL TR-71H MODULES (OR EQUAL) FOR TEMPERATURE/HUMIDITY CONTROL AND TR-40-CO2 (OR EQUAL) FOR CO2 CONTROL WHERE A CO2 SENSOR IS SPECIFIED.
22. ALL THERMOSTATS TO BE MOUNTED 4'-0" A.F.F. TO HIGHEST OPERABLE CONTROL UNLESS OTHERWISE INDICATED.
23. ALL REFRIGERANT LINES SHALL BE SIZED/APPROVED BY THE EQUIPMENT VENDOR/COMPRESSOR MANUFACTURER. ALL REFRIGERANT LINES SHALL BE INSTALLED USING INSULATED LINE CLAMPS.
24. PAINT ALL EXTERIOR EXPOSED ARMAFLEX INSULATION FOR UV PROTECTION.
25. PORTIONS OF DUCTWORK VISIBLE THROUGH GRILLES, REGISTERS, AND DIFFUSERS IN FINISHED AREAS SHALL BE PAINTED FLAT BLACK.
26. FLEXIBLE DUCT (SUPPLY RUNOUTS ONLY) SHALL NOT EXCEED 6'-0" IN LENGTH.
27. DUCTWORK SHALL BE INSULATED IN ACCORDANCE WITH THE FOLLOWING SCHEDULE:
    RECTANGULAR SUPPLY: 1" INTERNAL
    ROUND SUPPLY: 1-1/2" EXTERNAL
    FLEXIBLE SUPPLY: 1" PRE INSULATED
    RECTANGULAR RETURN: 1" INTERNAL
    OSA/EXHAUST: 1-1/2" EXTERNAL
28. DUCTWORK SHALL BE GALVANIZED AND INSTALLED IN ACCORDANCE WITH SMACNA STANDARDS.
29. LABEL ALL DUCTS WITH TYPE (SUPPLY, RETURN, ETC.) AND ARROWS INDICATING DIRECTION OF AIR FLOW. LABELS SHALL BE EVERY SIX FEET AND AT EACH CHANGE OF DIRECTION (T'S, ELBOWS, ETC.)
30. ROUND DUCT SHALL BE INSULATED WITH DUCT WRAP EQUAL TO CERTAINTEED SOFT TOUCH DUCT WRAP WITH FSK VAPOR RETARDER FACING TYPE 75 WITH MINIMUM INSTALLED R-VALUE 4.2. ROUND DUCTS LOCATED WITHIN THE ATTIC SHALL BE INSULATED WITH DUCT WRAP EQUAL TO CERTAINTEED SOFT TOUCH DUCT WRAP WITH FSK VAPOR RETARDER FACING TYPE 100 WITH MINIMUM INSTALLED R-VALUE 6.0
31. ALL OPEN ENDED DUCT SHALL BE CAPPED WITH 1/2"X1/2" WIRE MESH.
32. ALL EXPOSED DUCT SHALL BE INSULATED INTERNALLY WITH 1" DUCT LINER EQUAL TO CERTAINTEED TG2 DUCT LINER WITH MINIMUM INSTALLED R-VALUE 4.0.
33. ALL EXPOSED DUCT SHALL BE PAINTED. DUCT SHALL BE "PAINT GRIP". COORDINATE PAINT COLOR WITH OWNER.
34. DUCT LINER FOR RECTANGULAR DUCTS SHALL BE EQUAL TO CERTAINTEED TG2 DUCT LINER WITH A MINIMUM R-VALUE OF 4.0. RECTANGULAR DUCTS LOCATED WITHIN THE ATTIC SHALL BE LINED WITH DUCT LINER EQUAL TO CERTAINTEED TG2 DUCT LINER WITH A MINIMUM R-VALUE OF 4.0 AND WRAPPED EXTERNALLY WITH DUCT WRAP EQUAL TO CERTAINTEED SOFT TOUCH DUCT WRAP WITH FSK VAPOR RETARDER FACING TYPE 75 WITH A MINIMUM INSTALLED R-VALUE OF 4.2.
35. SLOPE HORIZONTAL SECTIONS OF KITCHEN HOOD EXHAUST DUCT A MINIMUM OF 1/4 INCH PER FOOT AS REQUIRED BY 2021 IMC. INSTALL CLEANOUTS IN GREASE DUCT TO ALLOW FOR SERVICING/CLEANING.
36. ALL DAMPERS INTERLOCKED WITH CARBON DIOXIDE SENSOR SHALL BE 24 VOLT MODULATING MOTORIZED DAMPER. DAMPER SHALL INCLUDE STEP DOWN TRANSFORMER 120V/24V.
37. WARRANTIES SHALL BEGIN AT FINAL ACCEPTANCE. ALL COMPRESSORS SHALL INCLUDE MIN. OF FIVE YEAR WARRANTY. ONE YEAR WARRANTY FOR LABOR, PARTS, UNITS, ETC. IS REQUIRED FOR ALL EQUIPMENT. ADDITIONALLY CONTRACTOR IS RESPONSIBLE FOR ALL PREVENTATIVE MAINTENANCE AND ROUTINE SERVICE ON INSTALLED EQUIPMENT FOR THE ONE YEAR WARRANTY PERIOD IN ORDER TO MAINTAIN ALL FACTORY/MANUFACTURER WARRANTIES.
38. CONTRACTOR SHALL ANCHOR OUTDOOR UNITS TO CONCRETE PAD IN ACCORDANCE WITH MANUFACTURER'S RECOMMENDATION, WIND LOAD REQUIREMENTS, AND AS PER PLANS/SPECIFICATIONS. COORDINATE CONCRETE PAD SIZE, UNIT CLEARANCES, ETC. WITH STRUCTURAL AND ARCHITECTURAL PLANS, FRAMING, ETC.
39. THE CONTRACTOR SHALL INSTALL ANY CURB-MOUNTED EQUIPMENT IN SUCH A WAY THAT NO WATER LEAKAGE IS INTRODUCED INTO THE BUILDING.
40. ALL INDOOR AND OUTDOOR UNITS SHALL BE LOCATED SO THAT MAINTENANCE CLEARANCES IN ACCORDANCE WITH MANUFACTURER'S RECOMMENDATION AND AS PER PLANS/SPECIFICATIONS ARE MAINTAINED. COORDINATE MAINTENANCE CLEARANCES WITH STRUCTURAL AND ARCHITECTURAL PLANS, FRAMING, ETC.
41. ALL COLOR/FINISH SELECTIONS SHALL BE MADE BY OWNER.
42. EXHAUST FAN CONTROL RELAYS SHALL BE WIRED TO THE NORMALLY CLOSED CONTACTS TO ALLOW THE FANS TO OPERATE IN THE EVENT THAT THE DDC CONTROLS ARE OFFLINE. EXHAUST FANS SHALL BE CONTROLLED BY THE BUILDING SCHEDULE.
43. COORDINATE DDC CONTROLLER TERMINAL ASSIGNMENTS WITH AANG DDC STANDARDS AND PRACTICES.
44. CARBON MONOXIDE DETECTORS SHALL BE MACURCO MODEL CM-6 (OR APPROVED EQUAL).

READINESS CENTER
LOUVER SCHEDULE

MARK NO.	MOUNTING	SIZE W X H	BLADE ANGLE	BLADE CENTERS	MIN. FREE AREA	MINIMUM FREE AREA SQ. FT.	MAXIMUM PRESSURE DROP IN W.G.	CFM	MODEL NO. DATA		NOTES
									MANUFACTURER (OR APPROVED EQUAL)	MODEL NO.	
L R1	SIDE WALL	40"X32"	37°	4"	55%	4.8	0.10	2,820	GREENHECK	ESD-635	SEE BELOW
L R2	SIDE WALL	40"X32"	37°	4"	55%	4.8	0.10	2,475	GREENHECK	ESD-635	SEE BELOW
L R3	SIDE WALL	40"X32"	37°	4"	55%	4.8	0.10	2,475	GREENHECK	ESD-635	SEE BELOW
L R4	SIDE WALL	40"X32"	37°	4"	55%	4.8	0.10	2,820	GREENHECK	ESD-635	SEE BELOW

1. LOUVER TO INCLUDE FLANGE FRAME AND KYNAR FINISH. VERIFY FINAL COLOR AND FINISH WITH ARCHITECT. VERIFY QUANTITY WITH PLANS.

APPROVED EQUALS: RUSKIN AND UNITED ENERTECH.

READINESS CENTER
HVAC LEGEND

SYMBOL	DESCRIPTION	SYMBOL	DESCRIPTION
	CEILING DIFFUSER – SUPPLY RECTANGULAR WITH ROUND NECK 4-WAY THROW UNLESS OTHERWISE INDICATED		STANDARD 90° RADIUS ELBOW
	CEILING DIFFUSER – RETURN RECTANGULAR WITH SQUARE NECK		STANDARD 45° RADIUS ELBOW
	SIDEWALL DIFFUSER – SUPPLY WITH MULTI-VANE DEFLECTOR		90° VANED ELBOW (PROVIDE ALL SQUARE OR RECTANGULAR ELBOWS WITH VANES EVEN IF SYMBOL IS MISSING)
	SIDEWALL DIFFUSER – RETURN WITH 30° FIXED DEFLECTION		45° VANED ELBOW (PROVIDE ALL SQUARE OR RECTANGULAR ELBOWS WITH VANES EVEN IF SYMBOL IS MISSING)
XX-X XXX CFM	DIFFUSER TAG REFERENCE SCHEDULE FOR SIZING		VANED TEE (PROVIDE ALL SQUARE OR RECTANGULAR TEE'S WITH VANES EVEN IF SYMBOL IS MISSING)
12"X12"	NEW RECTANGULAR DUCT WIDTH X DEPTH		STANDARD DUCT SIZE TRANSITION
10"ø	NEW ROUND DUCT DIAMETER		STANDARD SQUARE TO ROUND TRANSITION
	ACCESS DOORS VERTICAL OR HORIZONTAL		HORIZONTAL MOUNTED FIRE DAMPER
R	DUCT RISE IN DIRECTION OF ARROW		VERTICAL MOUNTED FIRE DAMPER
D	DUCT DROP IN DIRECTION OF ARROW	T	THERMOSTAT LOCATION
S P	DUCT MOUNTED STATIC PRESSURE SENSOR	H	HUMIDISTAT LOCATION
	MANUAL VOLUME DAMPER OPPOSED BLADE	M	CARBON MONOXIDE SENSOR LOCATION
M	LOW LEAKAGE MOTORIZED VOLUME DAMPER	C	CARBON DIOXIDE SENSOR LOCATION
S	SMOKE DETECTOR FOR FAN SHUT-DOWN	CD	HVAC CONDENSATE DRAIN PIPING
S	IN DUCT SENSOR (TEMP/HUMIDITY) LOCATION	R	HVAC REFRIGERANT LINE

READINESS CENTER
DESTRATIFICATION FAN SCHEDULE
DF-R1 / DF-R2 (18 FT. DIAMETER)

MODEL NO.	BIG ASS FANS POWERFOIL X4 PPX4 PLUS (18 FT. DIA.) OR APPROVED EQUAL.
NUMBER AND TYPE OF AIRFOILS	8 CUSTOM-ENGINEERED AIRFOILS
AIRFOIL FINISH	MILL FINISH ALUMINUM OR CUSTOM COLOR FINISH
WINGLET (STANDARD COLOR)	POWERFOIL PLUS WINGLET (BAF YELLOW)
CONTROLLER	VARIABLE SPEED CONTROLLER (WALL MOUNT), NEMA 4X
INPUT POWER AND REQUIRED BREAKER	200-240 VAC, 50/60 HZ, 3ø, 15 A
MOTOR	2.5 HP
MAXIMUM SPEED	91 RPM
MAXIMUM OPERATING TEMPERATURE (°F)	122°F
FAN WEIGHT (AS SHOWN)	281 LBS
MINIMUM AIRFOIL CLEARANCES REQUIRED	2 FT. ON SIDES, 6 FT. BELOW CEILING

1. 15 YEAR MECHANICAL WARRANTY; 7 YEAR ELECTRICAL WARRANTY; 1 YEAR LABOR WARRANTY.
2. CONTRACTOR SHALL FURNISH AND INSTALL STRUCTURAL SUPPORTS REQUIRED TO INSTALL FAN IN ACCORDANCE WITH MANUFACTURER'S RECOMMENDATIONS. STRUCTURAL SUPPORTS SHALL BE SUBMITTED TO THE ARCHITECT FOR REVIEW AND APPROVAL.
3. FAN TO INCLUDE "NO ASS" PACKAGE.
4. COORDINATE HANGING HEIGHT AND FINAL LOCATION WITH LIGHTING, EXISTING CONDITIONS, ETC. TO ENSURE PROPER OPERATION.

APPROVED EQUALS: HUNTER, GREENHECK, AND MACRO AIR

READINESS CENTER
CODES AND STANDARDS

- 2021 INTERNATIONAL PLUMBING CODE
- 2021 INTERNATIONAL MECHANICAL CODE
- 2021 INTERNATIONAL FIRE CODE
- 2010 ADA STANDARDS FOR ACCESSIBLE DESIGN
- ASHRAE 90.1-2013 ENERGY STANDARD

READINESS CENTER
HVAC DRAWING INDEX

SHEET NO.	SHEET TITLE
RM1.1	READINESS CENTER – HVAC LEGEND, NOTES, AND SCHEDULES
RM1.2	READINESS CENTER – HVAC SCHEDULES
RM1.3	READINESS CENTER – HVAC SCHEDULES
RM1.4	READINESS CENTER – HVAC SCHEDULES
RM1.5	READINESS CENTER – HVAC SCHEDULES
RM1.6	READINESS CENTER – HVAC SCHEDULES
RM1.7	READINESS CENTER – HVAC SCHEDULES AND DETAILS
RM2.1	READINESS CENTER – HVAC DETAILS
RM2.2	READINESS CENTER – HVAC DETAILS
RM2.3	READINESS CENTER – HVAC DETAILS
RM2.4	READINESS CENTER – HVAC DETAILS
RM2.5	READINESS CENTER – HVAC DETAILS
RM2.6	READINESS CENTER – HVAC DETAILS
RM2.7	READINESS CENTER – HVAC DETAILS
RM2.8	READINESS CENTER – HVAC DETAILS
RM2.9	READINESS CENTER – HVAC DETAILS
RM2.10	READINESS CENTER – HVAC DETAILS
RM2.11	READINESS CENTER – HVAC DETAILS
RM2.12	READINESS CENTER – HVAC DETAILS
RM2.13	READINESS CENTER – HVAC COMPLIANCE CALCULATIONS
RM2.14	READINESS CENTER – HVAC COMPLIANCE CALCULATIONS
RM3.1	ZONE A – READINESS CENTER – HVAC PLAN
RM3.2	ZONE B – READINESS CENTER – HVAC PLAN
RM3.3	ZONE C – READINESS CENTER – HVAC PLAN
RM3.4	ZONE D – READINESS CENTER – HVAC PLAN
RM3.5	ZONE A – READINESS CENTER – OUTSIDE AIR/EXHAUST HVAC PLAN
RM3.6	ZONE B – READINESS CENTER – OUTSIDE AIR/EXHAUST HVAC PLAN
RM3.7	ZONE C – READINESS CENTER – OUTSIDE AIR/EXHAUST HVAC PLAN
RM3.8	ZONE D – READINESS CENTER – OUTSIDE AIR/EXHAUST HVAC PLAN
RM4.1	ZONE A – READINESS CENTER – HVAC HYDRONIC PIPING PLAN
RM4.2	ZONE B – READINESS CENTER – HVAC HYDRONIC PIPING PLAN
RM4.3	ZONE C – READINESS CENTER – HVAC HYDRONIC PIPING PLAN
RM4.4	ZONE D – READINESS CENTER – HVAC HYDRONIC PIPING PLAN
RM4.5	READINESS CENTER – HVAC HYDRONIC PIPING RISER DIAGRAM

READINESS CENTER
HVAC LEGEND, NOTES, AND SCHEDULES

WHORTON ENGINEERING, INC.
HVAC – PLUMBING – PROCESS CONTROL
RANDALL WHORTON, P.E.
PHONE: (256) 820-9897
25 SUMMERALL GATE ROAD
ANNISTON, ALABAMA 36205

WHORTON ENGINEERING PROJECT NO. 22164

SS&L ARCHITECTS
Montgomery | Dothan | Auburn | Huntsville | Pensacola
WWW.SSLARCH.COM | 256.285.1063

Rev.	Description	Date

Job Number: 21112
AL ARNG IFB #: AC-25-B-0006-S
Date: NOVEMBER 1, 2024
Drawn By: JH
Checked By: RDW
Project Title: HUNTSVILLE READINESS CENTER, 5180 MOORE'S MILL ROAD, HUNTSVILLE AL, 35811
Sheet Title: READINESS CENTER HVAC LEGEND, NOTES, AND SCHEDULES
Sheet Number: RM1.1

STATE OF ALABAMA, RANDALL D. WHORTON, No.14192, PROFESSIONAL ENGINEER
11-05-2024

READINESS CENTER
GEOTHERMAL WATER SOURCE HEAT PUMP EQUIPMENT SCHEDULE

MARK NO.	NOMINAL FAN CFM	NOMINAL OSA CFM	EXT. STATIC IN. WC	GPM	COOLING CAPACITY										HEATING CAPACITY								ELECTRICAL DATA								MODEL NO. DATA		UNIT WEIGHT (LBS.)	MARK NO.	VOLTAGE	PUMP H.P.	HEAD LOSS (FT)	MANUFACTURER (OR APPROVED EQUAL)	MANUFACTURER MODEL NO.	NOTES
					WATER PD (FT.)	TOTAL CAP. MBH	SENS. CAP. MBH	TOTAL HEAT REJ.	EER (AHRI)	APPROX. COOLING POWER K.W.	ENT. AIR TEMP. (°F)	LEAVING AIR TEMP. (°F)	ENTERING WATER TEMP.	LEAVING WATER TEMP.	TOTAL CAP. MBH	TOTAL HEAT ABSORPT.	APPROX. HEATING POWER K.W.	ENTERING AIR TEMP. (DEG. F)	WATER PD (FT.)	ENTERING WATER TEMP.	LEAVING WATER TEMP.	COP (AHRI)	VOLTAGE	COMP. QTY.	COMP. R.L.A. (EA.)	FAN MOTOR QTY.	FAN H.P.	TOTAL F.L.A.	MIN. CIRCUIT AMP.	MAX FUSE SIZE	MANUFACTURER (OR APPROVED EQUAL)	MANUFACTURER MODEL NO.								
GHP R1	1,250	100	0.7	9.0	6.5	37.6	27.1	45.1	19.7	2.0	80/67	60.4°	80°	90°	50.4	40.7	2.3	70°	6.6	70°	61°	4.0	208/230-3-60	1	9.0	1	1/2	15.2	17.5	25	DAIKIN MCQUAY	WSMH036	298	PGHP R1	120-1-60	1/8	17.5	TACO	L1130	SEE BELOW
GHP R2	1,250	115	0.7	9.0	6.5	37.6	27.1	45.1	19.7	2.0	80/67	60.4°	80°	90°	50.4	40.7	2.3	70°	6.6	70°	61°	4.0	208/230-3-60	1	9.0	1	1/2	15.2	17.5	25	DAIKIN MCQUAY	WSMH036	298	PGHP R2	120-1-60	1/8	17.5	TACO	L1130	SEE BELOW
GHP R3	600	40	0.3	4.5	8.0	20.4	13.5	24.3	19.5	1.0	80/67	59.3°	80°	90.8°	25.0	20.0	1.3	70°	8.1	70°	61.1°	3.9	208/230-1-60	1	7.2	1	1/3	10.2	12.0	15	DAIKIN MCQUAY	WSMH019	210	PGHP R3	120-1-60	1/8	17.5	TACO	L0435	SEE BELOW
GHP R4	500	25	0.7	3.8	6.2	16.1	10.8	19.0	21.1	0.9	80/67	60.1°	80°	90.1°	20.6	16.9	1.0	70°	6.3	70°	61°	4.1	208/230-1-60	1	5.5	1	1/3	8.5	9.9	15	DAIKIN MCQUAY	WSMH015	210	PGHP R4	120-1-60	1/8	17.5	TACO	L0435	SEE BELOW
GHP R5	800	75	0.7	6.0	8.6	25.3	18.0	30.1	20.1	1.4	80/67	59.2°	80°	90°	31.6	25.5	1.6	70°	8.8	70°	61.5°	3.8	208/230-3-60	1	7.1	1	1/3	11.1	12.9	20	DAIKIN MCQUAY	WSMH024	279	PGHP R5	120-1-60	1/8	17.5	TACO	L0435	SEE BELOW
GHP R6	300	20	0.6	3.0	5.0	13.4	8.1	16.4	16.0	0.6	80/67	54.7°	80°	90.9°	17.6	13.1	0.7	70°	5.1	70°	61.3°	3.2	208/230-1-60	1	5.6	1	1/10	6.5	7.9	15	DAIKIN MCQUAY	WSMV012	127	PGHP R6	120-1-60	1/8	17.5	TACO	L0435	SEE BELOW
GHP R7	500	30	0.7	3.8	6.2	15.8	10.7	18.9	21.1	0.9	80/67	60.2°	80°	90.1°	17.6	13.8	1.0	70°	6.3	70°	62.6°	3.7	208/230-1-60	1	5.5	1	1/3	8.5	9.9	15	DAIKIN MCQUAY	WSMV015	170	PGHP R7	120-1-60	1/8	17.5	TACO	L0435	SEE BELOW
GHP R8	800	90	0.7	6.0	8.6	25.3	18.0	30.1	20.1	1.4	80/67	59.2°	80°	90°	31.6	25.5	1.6	70°	8.8	70°	61.5°	3.8	208/230-3-60	1	7.1	1	1/3	11.1	12.9	20	DAIKIN MCQUAY	WSMV024	279	PGHP R8	120-1-60	1/8	17.5	TACO	L0435	SEE BELOW
GHP R9	600	15	0.7	4.5	8.0	20.2	13.7	24.2	20.3	1.0	80/67	59°	80°	90.7°	24.9	19.7	1.3	70°	8.1	70°	61.2°	3.7	208/230-1-60	1	7.2	1	1/3	10.2	12.0	15	DAIKIN MCQUAY	WSMV019	184	PGHP R9	120-1-60	1/8	17.5	TACO	L0435	SEE BELOW
GHP R10	1,250	175	0.7	9.0	6.5	37.6	27.1	45.1	19.7	2.0	80/67	60.4°	80°	90°	50.4	40.7	2.3	70°	6.6	70°	61°	4.0	208/230-3-60	1	9.0	1	1/2	15.2	17.5	25	DAIKIN MCQUAY	WSMH036	298	PGHP R10	120-1-60	1/8	17.5	TACO	L1130	SEE BELOW
GHP R11	800	85	0.7	6.0	8.6	25.3	18.0	30.1	20.1	1.4	80/67	59.2°	80°	90°	31.6	25.5	1.6	70°	8.8	70°	61.5°	3.8	208/230-3-60	1	7.1	1	1/3	11.1	12.9	20	DAIKIN MCQUAY	WSMV024	279	PGHP R11	120-1-60	1/8	17.5	TACO	L0435	SEE BELOW
GHP R12	1,600	155	0.7	12.0	7.4	47.9	35.0	58.0	18.5	3.0	80/67	59.8°	80°	89.7°	62.2	49.4	3.5	70°	7.5	70°	61.8°	3.8	208/230-3-60	1	13.7	1	3/4	20.8	24.2	35	DAIKIN MCQUAY	WSMH048	383	PGHP R12	120-1-60	1/8	17.5	TACO	L0435	SEE BELOW
GHP R13	1,600	155	0.7	12.0	7.4	47.9	35.0	58.0	18.5	3.0	80/67	59.8°	80°	89.7°	62.2	49.4	3.5	70°	7.5	70°	61.8°	3.8	208/230-3-60	1	13.7	1	3/4	20.8	24.2	35	DAIKIN MCQUAY	WSMH048	383	PGHP R13	120-1-60	1/8	17.5	TACO	L0435	SEE BELOW
GHP R14	250	20	0.3	1.5	1.5	7.4	5.2	9.0	19.0	0.5	80/67	61.2°	80°	92°	9.5	7.7	0.6	70°	1.5	70°	59.7°	3.6	208/230-1-60	1	2.9	1	1/10	3.8	4.6	15	DAIKIN MCQUAY	WSMH007	151	PGHP R14	120-1-60	1/8	17.5	TACO	L0435	SEE BELOW
GHP R15	250	20	0.3	1.5	1.5	7.4	5.2	9.0	19.0	0.5	80/67	61.2°	80°	92°	9.5	7.7	0.6	70°	1.5	70°	59.7°	3.6	208/230-1-60	1	2.9	1	1/10	3.8	4.6	15	DAIKIN MCQUAY	WSMH007	151	PGHP R15	120-1-60	1/8	17.5	TACO	L0435	SEE BELOW
GHP R16	250	20	0.3	1.5	1.5	7.4	5.2	9.0	19.0	0.5	80/67	61.2°	80°	92°	9.5	7.7	0.6	70°	1.5	70°	59.7°	3.6	208/230-1-60	1	2.9	1	1/10	3.8	4.6	15	DAIKIN MCQUAY	WSMH007	151	PGHP R16	120-1-60	1/8	17.5	TACO	L0435	SEE BELOW
GHP R17	250	20	0.3	1.5	1.5	7.4	5.2	9.0	19.0	0.5	80/67	61.2°	80°	92°	9.5	7.7	0.6	70°	1.5	70°	59.7°	3.6	208/230-1-60	1	2.9	1	1/10	3.8	4.6	15	DAIKIN MCQUAY	WSMH007	151	PGHP R17	120-1-60	1/8	17.5	TACO	L0435	SEE BELOW
GHP R18	250	20	0.3	1.5	1.5	7.4	5.2	9.0	19.0	0.5	80/67	61.2°	80°	92°	9.5	7.7	0.6	70°	1.5	70°	59.7°	3.6	208/230-1-60	1	2.9	1	1/10	3.8	4.6	15	DAIKIN MCQUAY	WSMH007	151	PGHP R18	120-1-60	1/8	17.5	TACO	L0435	SEE BELOW
GHP R19	250	20	0.3	1.5	1.5	7.4	5.2	9.0	19.0	0.5	80/67	61.2°	80°	92°	9.5	7.7	0.6	70°	1.5	70°	59.7°	3.6	208/230-1-60	1	2.9	1	1/10	3.8	4.6	15	DAIKIN MCQUAY	WSMH007	151	PGHP R19	120-1-60	1/8	17.5	TACO	L0435	SEE BELOW
GHP R20	250	20	0.3	1.5	1.5	7.4	5.2	9.0	19.0	0.5	80/67	61.2°	80°	92°	9.5	7.7	0.6	70°	1.5	70°	59.7°	3.6	208/230-1-60	1	2.9	1	1/10	3.8	4.6	15	DAIKIN MCQUAY	WSMH007	151	PGHP R20	120-1-60	1/8	17.5	TACO	L0435	SEE BELOW
GHP R21	250	20	0.3	1.5	1.5	7.4	5.2	9.0	19.0	0.5	80/67	61.2°	80°	92°	9.5	7.7	0.6	70°	1.5	70°	59.7°	3.6	208/230-1-60	1	2.9	1	1/10	3.8	4.6	15	DAIKIN MCQUAY	WSMH007	151	PGHP R21	120-1-60	1/8	17.5	TACO	L0435	SEE BELOW
GHP R22	250	20	0.3	1.5	1.5	7.4	5.2	9.0	19.0	0.5	80/67	61.2°	80°	92°	9.5	7.7	0.6	70°	1.5	70°	59.7°	3.6	208/230-1-60	1	2.9	1	1/10	3.8	4.6	15	DAIKIN MCQUAY	WSMH007	151	PGHP R22	120-1-60	1/8	17.5	TACO	L0435	SEE BELOW
GHP R23	600	60	0.3	4.5	8.0	20.4	13.5	24.3	19.5	1.0	80/67	59.3°	80°	90.8°	25.0	20.0	1.3	70°	8.1	70°	61.1°	3.9	208/230-1-60	1	7.2	1	1/3	10.2	12.0	15	DAIKIN MCQUAY	WSMH019	210	PGHP R23	120-1-60	1/8	17.5	TACO	L0435	SEE BELOW
GHP R24	500	25	0.7	3.8	6.2	16.1	10.8	19.0	21.1	0.9	80/67	60.1°	80°	90.1°	20.6	16.9	1.0	70°	6.3	70°	61°	4.1	208/230-1-60	1	5.5	1	1/3	8.5	9.9	15	DAIKIN MCQUAY	WSMH015	210	PGHP R24	120-1-60	1/8	17.5	TACO	L0435	SEE BELOW
GHP R25	300	25	0.6	3.0	5.0	13.5	7.8	16.6	16.6	0.6	80/67	55.5°	80°	91.1°	17.7	13.2	0.7	70°	5.1	70°	61.2°	3.5	208/230-1-60	1	5.6	1	1/10	6.5	7.9	15	DAIKIN MCQUAY	WSMH012	157	PGHP R25	120-1-60	1/8	17.5	TACO	L0435	SEE BELOW
GHP R26	500	–	0.7	3.8	6.2	15.8	10.7	18.9	21.1	0.9	80/67	60.2°	80°	90.1°	17.6	13.8	1.0	70°	6.3	70°	62.6°	3.7	208/230-1-60	1	5.5	1	1/3	8.5	9.9	15	DAIKIN MCQUAY	WSMV015	170	PGHP R26	120-1-60	1/8	17.5	TACO	L0435	SEE BELOW
GHP R27	2,000	260	0.7	15.0	11.4	62.2	42.8	76.2	17.6	3.8	80/67	60.3°	80°	90.2°	74.2	57.6	4.6	70°	11.6	70°	62.3°	3.7	208/230-3-60	1	16.0	1	1.0	24.6	28.6	45	DAIKIN MCQUAY	WSMV060	343	PGHP R27	120-1-60	1/6	17.5	TACO	L1034	SEE BELOW
GHP R28	1,250	365	0.7	9.0	6.5	37.6	27.1	45.1	19.7	2.0	80/67	60.4°	80°	90°	50.4	40.7	2.3	70°	6.6	70°	61°	4.0	208/230-3-60	1	9.0	1	1/2	15.2	17.5	25	DAIKIN MCQUAY	WSMH036	298	PGHP R28	120-1-60	1/8	17.5	TACO	L1130	SEE BELOW
GHP R29	600	–	0.7	4.5	8.0	20.2	13.7	24.2	20.3	1.0	80/67	59°	80°	90.7°	24.9	19.7	1.3	70°	8.1	70°	61.2°	3.7	208/230-1-60	1	7.2	1	1/3	10.2	12.0	15	DAIKIN MCQUAY	WSMV019	184	PGHP R29	120-1-60	1/8	17.5	TACO	L0435	SEE BELOW
GHP R30	2,000	520	0.7	15.0	11.4	62.2	42.8	76.2	17.6	3.8	80/67	60.3°	80°	90.2°	74.2	57.6	4.6	70°	11.6	70°	62.3°	3.7	208/230-3-60	1	16.0	1	1.0	24.6	28.6	45	DAIKIN MCQUAY	WSMV060	343	PGHP R30	120-1-60	1/6	17.5	TACO	L1034	SEE BELOW
GHP R31	2,000	520	0.7	15.0	11.4	61.2	43.6	74.2	16.9	3.8	80/67	59.9°	80°	89.9°	84.1	66.7	4.6	70°	9.7	70°	61.1°	3.4	208/230-3-60	1	16.0	1	1.0	24.6	28.6	45	DAIKIN MCQUAY	WSMH060	387	PGHP R31	120-1-60	1/6	17.5	TACO	L1034	SEE BELOW
TOTAL		3,035		175.7		746.2	521.7	900.1		42.9					950.3	756.4	50.8																						

1. UNIT TO INCLUDE HOT GAS REHEAT AND HOT GAS BYPASS WITH HUMIDISTAT.
2. ALL UNITS SHALL INCLUDE MERV 13 FILTERS.
3. REFRIGERANT R-32.
4. ALL VERTICAL UNITS TO BE MOUNTED ON A STEEL ANGLE FRAME. PRIME AND PAINT TO MATCH UNIT.
5. ALL PUMPS TO BE STARTED AND STOPPED WITH UNIT COMPRESSOR. ALL ELECTRICAL REQUIRED FOR THIS OPERATION/CONNECTION SHALL BE FURNISHED AND INSTALLED BY THE DDC SYSTEM INSTALLER.
6. UNIT TO INCLUDE BIOCLIMATIC (OR APPROVED EQUAL) BI-POLAR IONIZATION UNIT (NEEDLEPOINT) MOUNTED IN UNIT RETURN DUCT PER MANUFACTURER'S RECOMMENDATION. IONIZATION UNIT SHALL BE POWERED FROM ASSOCIATED AIR HANDLER.
7. UNIT SHALL INCLUDE EXTENDED RANGE OPTION.
8. EER IS BASED ON 80.6 DEGREE D.B., 66.2 DEGREE W.B. E.A.T., AND 77.7 DEGREE ENT. E.W.T.
9. COP IS BASED ON 68.0 DEGREE D.B., 59.0 DEGREE W.B. E.A.T., AND 32.0 DEGREE ENT. E.W.T.
10. UNIT TO INCLUDE FACTORY LOOP CIRCULATOR PUMP.
11. UNIT SHALL INCLUDE FACTORY HVAC UNIT CONTROLLER. COORDINATE WITH CONTROLS CONTRACTOR.
12. EQUIPMENT MUST BE FULLY COORDINATED WITH THE HVAC CONTRACTOR AS WELL AS THE ELECTRICAL CONTRACTOR FOR FINAL SUBMITTAL AND INCORPORATION IN THE PROJECT. THIS INCLUDES SIZE, WEIGHT, SOUND PRESSURE LEVELS, AIR FLOW, MOUNTING CLEARANCES, ETC.
13. UNIT TO INCLUDE UV-C PROTECTION. EQUIPMENT SHALL BE FRESH-AIRE UV AIRBORNE DUCT SYSTEM MODEL TUV-C-ADS (OR APPROVED EQUAL).
14. OUTSIDE AIR IS SUPPLIED THROUGH OUTSIDE AIR UNIT DIRECTLY INTO SPACE.
15. ALL UNITS SHALL BE ASHRAE 90.1-2013 COMPLIANT.

APPROVED EQUALS: CARRIER AND TRANE

READINESS CENTER
HVAC SCHEDULES

WHORTON ENGINEERING, INC.
HVAC – PLUMBING – PROCESS CONTROL
RANDALL WHORTON, P.E.
PHONE: (256) 820-9897
25 SUMMERALL GATE ROAD
ANNISTON, ALABAMA 36205
WHORTON ENGINEERING PROJECT NO. 22164

S|S&L ARCHITECTS
Montgomery | Dothan | Auburn | Huntsville | Pensacola
WWW.SSLARCH.COM | 256.285.1063

Rev.	Description	Date

Job Number: 21112
AL ARNG IFB #: AC-25-B-0006-S
Date: NOVEMBER 1, 2024
Drawn By: JH
Checked By: RDW
Project Title:

HUNTSVILLE READINESS CENTER
5180 MOORE'S MILL ROAD
HUNTSVILLE AL, 35811

Sheet Title: READINESS CENTER HVAC SCHEDULES

Sheet Number: RM1.2

STATE OF ALABAMA — RANDALL D. WHORTON — No.14192 — PROFESSIONAL ENGINEER
11-05-2024

READINESS CENTER
GEOTHERMAL WATER SOURCE HEAT PUMP EQUIPMENT SCHEDULE

MARK NO.	NOMINAL FAN CFM	NOMINAL OSA CFM	EXT. STATIC IN. WC	GPM	COOLING CAPACITY										HEATING CAPACITY								ELECTRICAL DATA								MODEL NO. DATA		UNIT WEIGHT (LBS.)	MARK NO.	VOLTAGE	PUMP H.P.	HEAD LOSS (FT)	MANUFACTURER (OR APPROVED EQUAL)	MANUFACTURER MODEL NO.	NOTES
					WATER PD (FT.)	TOTAL CAP. MBH	SENS. CAP. MBH	TOTAL HEAT REJ.	EER (AHRI)	APPROX. COOLING POWER K.W.	ENT. AIR TEMP. (°F)	LEAVING AIR TEMP. (°F)	ENTERING WATER TEMP.	LEAVING WATER TEMP.	TOTAL CAP. MBH	TOTAL HEAT ABSORPT.	APPROX. HEATING POWER K.W.	ENTERING AIR TEMP. (DEG. F)	WATER PD (FT.)	ENTERING WATER TEMP.	LEAVING WATER TEMP.	COP (AHRI)	VOLTAGE	COMP. QTY.	COMP. R.L.A. (EA.)	FAN MOTOR QTY.	FAN H.P.	TOTAL F.L.A.	MIN. CIRCUIT AMP.	MAX FUSE SIZE	MANUFACTURER (OR APPROVED EQUAL)	MANUFACTURER MODEL NO.								
GHP R32	2,000	615	0.7	15.0	11.4	61.2	43.6	74.2	16.9	3.8	80/67	59.9°	80°	89.9°	84.1	66.7	4.6	70°	9.7	70°	61.1°	3.4	208/230-3-60	1	16.0	1	1.0	24.6	28.6	45	DAIKIN MCQUAY	WSMH060	387	PGHP R32	120-1-60	1/6	17.5	TACO	L1034	SEE BELOW
GHP R33	2,000		0.7	15.0	11.4	61.2	43.6	74.2	16.9	3.8	80/67	59.9°	80°	89.9°	84.1	66.7	4.6	70°	9.7	70°	61.1°	3.4	208/230-3-60	1	16.0	1	1.0	24.6	28.6	45	DAIKIN MCQUAY	WSMH060	387	PGHP R33	120-1-60	1/6	17.5	TACO	L1034	SEE BELOW
GHP R34	250	–	0.3	1.5	1.5	7.4	5.2	9.0	19.0	0.5	80/67	61.2°	80°	92°	9.5	7.7	0.6	70°	1.5	70°	59.7°	3.6	208/230-1-60	1	2.9	1	1/10	3.8	4.6	15	DAIKIN MCQUAY	WSMH007	151	PGHP R34	120-1-60	1/8	17.5	TACO	L0435	SEE BELOW
GHP R35	250	–	0.3	1.5	1.5	7.4	5.2	9.0	19.0	0.5	80/67	61.2°	80°	92°	9.5	7.7	0.6	70°	1.5	70°	59.7°	3.6	208/230-1-60	1	2.9	1	1/10	3.8	4.6	15	DAIKIN MCQUAY	WSMH007	151	PGHP R35	120-1-60	1/8	17.5	TACO	L0435	SEE BELOW
GHP R36	250	25	0.3	1.5	1.5	7.4	5.2	9.0	19.0	0.5	80/67	61.2°	80°	92°	9.5	7.7	0.6	70°	1.5	70°	59.7°	3.6	208/230-1-60	1	2.9	1	1/10	3.8	4.6	15	DAIKIN MCQUAY	WSMH007	151	PGHP R36	120-1-60	1/8	17.5	TACO	L0435	SEE BELOW
GHP R37	2,000	475	0.7	15.0	11.4	62.2	42.8	76.2	17.6	3.8	80/67	60.3°	80°	90.2°	74.2	57.6	4.6	70°	11.6	70°	62.3°	3.7	208/230-3-60	1	16.0	1	1.0	24.6	28.6	45	DAIKIN MCQUAY	WSMV060	343	PGHP R37	120-1-60	1/6	17.5	TACO	L1034	SEE BELOW
GHP R38	2,000		0.7	15.0	11.4	62.2	42.8	76.2	17.6	3.8	80/67	60.3°	80°	90.2°	74.2	57.6	4.6	70°	11.6	70°	62.3°	3.7	208/230-3-60	1	16.0	1	1.0	24.6	28.6	45	DAIKIN MCQUAY	WSMV060	343	PGHP R38	120-1-60	1/6	17.5	TACO	L1034	SEE BELOW
GHP R39	250	20	0.3	1.5	1.5	7.5	5.4	9.2	19.1	0.5	80/67	61°	80°	92.2°	9.3	7.5	0.6	70°	1.5	70°	60.1°	3.4	208/230-1-60	1	2.9	1	1/10	3.8	4.5	15	DAIKIN MCQUAY	WSMV007	120	PGHP R39	120-1-60	1/8	17.5	TACO	L0435	SEE BELOW
GHP R40	1,000	150	0.7	7.5	9.7	28.8	21.1	34.4	20.2	1.8	80/67	60.5°	80°	89.2°	36.2	29.4	1.9	70°	10.1	70°	62.2	3.9	208/230-3-60	1	8.3	1	1/2	14.5	16.6	20	DAIKIN MCQUAY	WSMH030	279	PGHP R40	120-1-60	1/8	17.5	TACO	L0435	SEE BELOW
GHP R41	250	20	0.3	1.5	1.5	7.4	5.2	9.0	19.0	0.5	80/67	61.2°	80°	92°	9.5	7.7	0.6	70°	1.5	70°	59.7°	3.6	208/230-1-60	1	2.9	1	1/10	3.8	4.6	15	DAIKIN MCQUAY	WSMH007	151	PGHP R41	120-1-60	1/8	17.5	TACO	L0435	SEE BELOW
GHP R42	500	–	0.7	3.8	6.2	15.8	10.7	18.9	21.1	0.9	80/67	60.2°	80°	90.1°	17.6	13.8	1.0	70°	6.3	70°	62.6°	3.7	208/230-1-60	1	5.5	1	1/3	8.5	9.9	15	DAIKIN MCQUAY	WSMV015	170	PGHP R42	120-1-60	1/8	17.5	TACO	L0435	SEE BELOW
GHP R43	800	–	0.7	6.0	8.6	25.3	18.0	30.1	20.1	1.4	80/67	59.2°	80°	90°	31.6	25.5	1.6	70°	8.8	70°	61.5°	3.8	208/230-3-60	1	7.1	1	1/3	11.1	12.9	20	DAIKIN MCQUAY	WSMV024	279	PGHP R43	120-1-60	1/8	17.5	TACO	L0435	SEE BELOW
GHP R44	800	50	0.7	6.0	8.6	25.3	18.0	30.1	20.1	1.4	80/67	59.2°	80°	90°	31.6	25.5	1.6	70°	8.8	70°	61.5°	3.8	208/230-3-60	1	7.1	1	1/3	11.1	12.9	20	DAIKIN MCQUAY	WSMH024	279	PGHP R44	120-1-60	1/8	17.5	TACO	L0435	SEE BELOW
GHP R45	300	25	0.6	3.0	5.0	13.5	7.8	16.6	16.6	0.6	80/67	55.5°	80°	91.1°	17.7	13.2	0.7	70°	5.1	70°	61.2°	3.5	208/230-1-60	1	5.6	1	1/10	6.5	7.9	15	DAIKIN MCQUAY	WSMH012	157	PGHP R45	120-1-60	1/8	17.5	TACO	L0435	SEE BELOW
GHP R46	500	25	0.7	3.8	6.2	16.1	10.8	19.0	21.1	0.9	80/67	60.1°	80°	90.1°	20.6	16.9	1.0	70°	6.3	70°	61°	4.1	208/230-1-60	1	5.5	1	1/3	8.5	9.9	15	DAIKIN MCQUAY	WSMH015	210	PGHP R46	120-1-60	1/8	17.5	TACO	L0435	SEE BELOW
GHP R47	250	20	0.3	1.5	1.5	7.4	5.2	9.0	19.0	0.5	80/67	61.2°	80°	92°	9.5	7.7	0.6	70°	1.5	70°	59.7°	3.6	208/230-1-60	1	2.9	1	1/10	3.8	4.6	15	DAIKIN MCQUAY	WSMH007	151	PGHP R47	120-1-60	1/8	17.5	TACO	L0435	SEE BELOW
GHP R48	250	20	0.3	1.5	1.5	7.4	5.2	9.0	19.0	0.5	80/67	61.2°	80°	92°	9.5	7.7	0.6	70°	1.5	70°	59.7°	3.6	208/230-1-60	1	2.9	1	1/10	3.8	4.6	15	DAIKIN MCQUAY	WSMH007	151	PGHP R48	120-1-60	1/8	17.5	TACO	L0435	SEE BELOW
GHP R49	250	20	0.3	1.5	1.5	7.4	5.2	9.0	19.0	0.5	80/67	61.2°	80°	92°	9.5	7.7	0.6	70°	1.5	70°	59.7°	3.6	208/230-1-60	1	2.9	1	1/10	3.8	4.6	15	DAIKIN MCQUAY	WSMH007	151	PGHP R49	120-1-60	1/8	17.5	TACO	L0435	SEE BELOW
GHP R50	250	20	0.3	1.5	1.5	7.4	5.2	9.0	19.0	0.5	80/67	61.2°	80°	92°	9.5	7.7	0.6	70°	1.5	70°	59.7°	3.6	208/230-1-60	1	2.9	1	1/10	3.8	4.6	15	DAIKIN MCQUAY	WSMH007	151	PGHP R50	120-1-60	1/8	17.5	TACO	L0435	SEE BELOW
GHP R51	250	20	0.3	1.5	1.5	7.4	5.2	9.0	19.0	0.5	80/67	61.2°	80°	92°	9.5	7.7	0.6	70°	1.5	70°	59.7°	3.6	208/230-1-60	1	2.9	1	1/10	3.8	4.6	15	DAIKIN MCQUAY	WSMH007	151	PGHP R51	120-1-60	1/8	17.5	TACO	L0435	SEE BELOW
GHP R52	250	20	0.3	1.5	1.5	7.4	5.2	9.0	19.0	0.5	80/67	61.2°	80°	92°	9.5	7.7	0.6	70°	1.5	70°	59.7°	3.6	208/230-1-60	1	2.9	1	1/10	3.8	4.6	15	DAIKIN MCQUAY	WSMH007	151	PGHP R52	120-1-60	1/8	17.5	TACO	L0435	SEE BELOW
GHP R53	250	20	0.3	1.5	1.5	7.4	5.2	9.0	19.0	0.5	80/67	61.2°	80°	92°	9.5	7.7	0.6	70°	1.5	70°	59.7°	3.6	208/230-1-60	1	2.9	1	1/10	3.8	4.6	15	DAIKIN MCQUAY	WSMH007	151	PGHP R53	120-1-60	1/8	17.5	TACO	L0435	SEE BELOW
GHP R54	250	20	0.3	1.5	1.5	7.4	5.2	9.0	19.0	0.5	80/67	61.2°	80°	92°	9.5	7.7	0.6	70°	1.5	70°	59.7°	3.6	208/230-1-60	1	2.9	1	1/10	3.8	4.6	15	DAIKIN MCQUAY	WSMH007	151	PGHP R54	120-1-60	1/8	17.5	TACO	L0435	SEE BELOW
GHP R55	250	20	0.3	1.5	1.5	7.4	5.2	9.0	19.0	0.5	80/67	61.2°	80°	92°	9.5	7.7	0.6	70°	1.5	70°	59.7°	3.6	208/230-1-60	1	2.9	1	1/10	3.8	4.6	15	DAIKIN MCQUAY	WSMH007	151	PGHP R55	120-1-60	1/8	17.5	TACO	L0435	SEE BELOW
GHP R56	1,600	150	0.7	12.0	7.4	47.9	35.0	58.0	18.5	3.0	80/67	59.8°	80°	89.7°	62.2	49.4	3.5	70°	7.5	70°	61.8°	3.8	208/230-3-60	1	13.7	1	3/4	20.8	24.2	35	DAIKIN MCQUAY	WSMH048	383	PGHP R56	120-1-60	1/8	17.5	TACO	L0435	SEE BELOW
GHP R57	1,600	150	0.7	12.0	7.4	47.9	35.0	58.0	18.5	3.0	80/67	59.8°	80°	89.7°	62.2	49.4	3.5	70°	7.5	70°	61.8°	3.8	208/230-3-60	1	13.7	1	3/4	20.8	24.2	35	DAIKIN MCQUAY	WSMH048	383	PGHP R57	120-1-60	1/8	17.5	TACO	L0435	SEE BELOW
GHP R58	600	40	0.3	4.5	8.0	20.4	13.5	24.3	19.5	1.0	80/67	59.3°	80°	90.8°	25.0	20.0	1.3	70°	8.1	70°	61.1°	3.9	208/230-1-60	1	7.2	1	1/3	10.2	12.0	15	DAIKIN MCQUAY	WSMH019	210	PGHP R58	120-1-60	1/8	17.5	TACO	L0435	SEE BELOW
GHP R59	800	70	0.7	6.0	8.6	25.3	18.0	30.1	20.1	1.4	80/67	59.2°	80°	90°	31.6	25.5	1.6	70°	8.8	70°	61.5°	3.8	208/230-3-60	1	7.1	1	1/3	11.1	12.9	20	DAIKIN MCQUAY	WSMH024	279	PGHP R59	120-1-60	1/8	17.5	TACO	L0435	SEE BELOW
GHP R60	600	–	0.7	4.5	8.0	20.2	13.7	24.2	20.3	1.0	80/67	59°	80°	90.7°	24.9	19.7	1.3	70°	8.1	70°	61.2°	3.7	208/230-1-60	1	7.2	1	1/3	10.2	12.0	15	DAIKIN MCQUAY	WSMV019	184	PGHP R60	120-1-60	1/8	17.5	TACO	L0435	SEE BELOW
GHP R61	1,250	130	0.7	9.0	6.5	37.6	27.1	45.1	19.7	2.0	80/67	60.4°	80°	90°	50.4	40.7	2.3	70°	6.6	70°	61°	4.0	208/230-3-60	1	9.0	1	1/2	15.2	17.5	25	DAIKIN MCQUAY	WSMH036	298	PGHP R61	120-1-60	1/8	17.5	TACO	L1130	SEE BELOW
GHP R62	1,250	130	0.7	9.0	6.5	37.6	27.1	45.1	19.7	2.0	80/67	60.4°	80°	90°	50.4	40.7	2.3	70°	6.6	70°	61°	4.0	208/230-3-60	1	9.0	1	1/2	15.2	17.5	25	DAIKIN MCQUAY	WSMH036	298	PGHP R62	120-1-60	1/8	17.5	TACO	L1130	SEE BELOW
GHP R63	1,250	175	0.7	9.0	6.5	37.6	27.1	45.1	19.7	2.0	80/67	60.4°	80°	90°	50.4	40.7	2.3	70°	6.6	70°	61°	4.0	208/230-3-60	1	9.0	1	1/2	15.2	17.5	25	DAIKIN MCQUAY	WSMH036	298	PGHP R63	120-1-60	1/8	17.5	TACO	L1130	SEE BELOW
GHP R64	1,250	175	0.7	9.0	6.5	37.6	27.1	45.1	19.7	2.0	80/67	60.4°	80°	90°	50.4	40.7	2.3	70°	6.6	70°	61°	4.0	208/230-3-60	1	9.0	1	1/2	15.2	17.5	25	DAIKIN MCQUAY	WSMH036	298	PGHP R64	120-1-60	1/8	17.5	TACO	L1130	SEE BELOW
TOTAL		2,605		186.1		787.4	555.8	951.1		46.6					1,012.2	807.3	55.0																							

1. UNIT TO INCLUDE HOT GAS REHEAT AND HOT GAS BYPASS WITH HUMIDISTAT.
2. ALL UNITS SHALL INCLUDE MERV 13 FILTERS.
3. REFRIGERANT R-32.
4. ALL VERTICAL UNITS TO BE MOUNTED ON A STEEL ANGLE FRAME. PRIME AND PAINT TO MATCH UNIT.
5. ALL PUMPS TO BE STARTED AND STOPPED WITH UNIT COMPRESSOR. ALL ELECTRICAL REQUIRED FOR THIS OPERATION/CONNECTION SHALL BE FURNISHED AND INSTALLED BY THE DDC SYSTEM INSTALLER.
6. UNIT TO INCLUDE BIOCLIMATIC (OR APPROVED EQUAL) BI-POLAR IONIZATION UNIT (NEEDLEPOINT) MOUNTED IN UNIT RETURN DUCT PER MANUFACTURER'S RECOMMENDATION. IONIZATION UNIT SHALL BE POWERED FROM ASSOCIATED AIR HANDLER.
7. UNIT SHALL INCLUDE EXTENDED RANGE OPTION.
8. EER IS BASED ON 80.6 DEGREE D.B., 66.2 DEGREE W.B. E.A.T., AND 77.7 DEGREE ENT. E.W.T.
9. COP IS BASED ON 68.0 DEGREE D.B., 59.0 DEGREE W.B. E.A.T., AND 32.0 DEGREE ENT. E.W.T.
10. UNIT TO INCLUDE FACTORY LOOP CIRCULATOR PUMP.
11. UNIT SHALL INCLUDE FACTORY HVAC UNIT CONTROLLER. COORDINATE WITH CONTROLS CONTRACTOR.
12. EQUIPMENT MUST BE FULLY COORDINATED WITH THE HVAC CONTRACTOR AS WELL AS THE ELECTRICAL CONTRACTOR FOR FINAL SUBMITTAL AND INCORPORATION IN THE PROJECT. THIS INCLUDES SIZE, WEIGHT, SOUND PRESSURE LEVELS, AIR FLOW, MOUNTING CLEARANCES, ETC.
13. UNIT TO INCLUDE UV-C PROTECTION. EQUIPMENT SHALL BE FRESH-AIRE UV AIRBORNE DUCT SYSTEM MODEL TUV-C-ADS (OR APPROVED EQUAL).
14. OUTSIDE AIR IS SUPPLIED THROUGH OUTSIDE AIR UNIT DIRECTLY INTO SPACE.
15. ALL UNITS SHALL BE ASHRAE 90.1-2013 COMPLIANT.

APPROVED EQUALS: CARRIER AND TRANE

READINESS CENTER
HVAC SCHEDULES

WHORTON ENGINEERING, INC.
HVAC – PLUMBING – PROCESS CONTROL
RANDALL WHORTON, P.E.
PHONE: (256) 820-9897
25 SUMMERALL GATE ROAD
ANNISTON, ALABAMA 36205
WHORTON ENGINEERING PROJECT NO. 22164

S|S&L ARCHITECTS
Montgomery | Dothan | Auburn | Huntsville | Pensacola
WWW.SSLARCH.COM | 256.285.1063

Rev.	Description	Date

Job Number: 21112
AL ARNG IFB #: AC-25-B-0006-S
Date: NOVEMBER 1, 2024
Drawn By: JH
Checked By: RDW

Project Title
HUNTSVILLE READINESS CENTER
5180 MOORE'S MILL ROAD
HUNTSVILLE AL, 35811

Sheet Title
READINESS CENTER HVAC SCHEDULES

Sheet Number
RM1.3

STATE OF ALABAMA LICENSED PROFESSIONAL ENGINEER No.14192 RANDALL D. WHORTON
11-05-2024

READINESS CENTER
TOTAL ENERGY RECOVERY UNIT SCHEDULE (OSA-R1 / OSA-R2)

GENERAL DATA			
MARK NO.	OSA-R1/OSA-R2	WHEEL EFFECTIVENESS	69.4%
MANUFACTURER (OR APPROVED EQUAL)	AAON	UNIT LENGTH (INCHES)	130.0
MODEL NO.	SB-010-8-0-L80A-E2J	UNIT HEIGHT (INCHES)	79.0
TYPE	WHEEL	UNIT WIDTH (INCHES)	43.0
AIRFLOW (CFM)	2,820	UNIT WEIGHT (LBS.)	1,100
SUPPLY FAN (HP)	3.0	EXHAUST FAN (HP)	4.0
SUPPLY FAN EXTERNAL SP (IN. WG)	1.5	EXHAUST FAN EXTERNAL SP (IN. WG)	1.5
VARIABLE SPEED SUPPLY	YES (SOFT START)	VARIABLE SPEED EXHAUST	YES (SOFT START)
MOISTURE DRY BULB (°F)	83.4°	INDOOR DESIGN DRY BULB (°F)	72.0°
MOISTURE WET BULB (°F)	79.3°	INDOOR DESIGN WET BULB (°F)	60.0°
SUMMER DESIGN DRY BULB (°F)	94.1°	WINTER DESIGN DRY BULB (°F)	20.1°
SUMMER DESIGN WET BULB (°F)	76.8°	WINTER DESIGN WET BULB (°F)	16.6°

COOLING PERFORMANCE			
COOLING TYPE	GEOTHERMAL	ENTERING FLUID TEMPERATURE (°F)	90.0°
MANUFACTURER (OR APPROVED EQUAL)	AAON	LEAVING FLUID TEMPERATURE (°F)	99.4°
AIRSIDE COIL CAPACITY (MBH)	136.8	FLUID FLOW RATE (GPM)	35
UNIT CAPACITY W/ ENERGY WHEEL (MBH)	240.1	FLUID PRESSURE DROP (FT. WG)	10.6
ENTERING AIR DRY BULB (°F)	82.4°	LEAVING AIR DRY BULB (°F)	52.9°
ENTERING AIR WET BULB (°F)	68.8°	LEAVING AIR WET BULB (°F)	52.6°

HEATING PERFORMANCE			
AIRSIDE COIL CAPACITY (MBH)	143.7	ENTERING FLUID TEMPERATURE (°F)	53.0°
UNIT CAPACITY W/ ENERGY WHEEL (MBH)	174.3	LEAVING FLUID TEMPERATURE (°F)	46.2°
ENTERING AIR DRY BULB (°F)	50.4°	HOT GAS REHEAT – CAPACITY (MBH)	66.3
LEAVING AIR DRY BULB (°F)	95.7°	HOT GAS REHEAT – LAT (°F)	75.0°

SUMMER OPERATION PERFORMANCE			
UNIT OUTSIDE AIR DATA		UNIT RETURN AIR DATA	
AIRFLOW (CFM)	2,820	AIRFLOW (CFM)	2,475
DRY BULB TEMPERATURE (°F)	94.1°	DRY BULB TEMPERATURE (°F)	75.0°
WET BULB TEMPERATURE (°F)	76.8°	WET BULB TEMPERATURE (°F)	62.4°
HEAT EXCHANGER SUPPLY DATA		HEAT EXCHANGER EXHAUST DATA	
DRY BULB TEMPERATURE (°F)	82.4°	DRY BULB TEMPERATURE (°F)	88.6°
WET BULB TEMPERATURE (°F)	68.8°	WET BULB TEMPERATURE (°F)	72.8°

WINTER OPERATION PERFORMANCE			
UNIT OUTSIDE AIR DATA		UNIT RETURN AIR DATA	
AIRFLOW (CFM)	2,820	AIRFLOW (CFM)	2,475
DRY BULB TEMPERATURE (°F)	20.1°	DRY BULB TEMPERATURE (°F)	72.0°
WET BULB TEMPERATURE (°F)	16.6°	WET BULB TEMPERATURE (°F)	55.7°
HEAT EXCHANGER SUPPLY DATA		HEAT EXCHANGER EXHAUST DATA	
DRY BULB TEMPERATURE (°F)	50.4°	DRY BULB TEMPERATURE (°F)	34.8°
WET BULB TEMPERATURE (°F)	41.7°	WET BULB TEMPERATURE (°F)	30.1°

ELECTRICAL DATA			
VOLTAGE	208-3-60	SUPPLY MOTOR RPM	2,219
UNIT MCA (AMPS)	56.0	SUPPLY EFFICIENCY	PE
UNIT MOP (AMPS)	80.0	EXHAUST MOTOR RPM	1,494
ENCLOSURE	ODP	EXHAUST EFFICIENCY	PE
UNIT MINIMUM EER	18.7	UNIT MINIMUM COP	6.5

1. UNIT TO INCLUDE DOUBLE WALL CONSTRUCTION, 2" PLEATED OUTDOOR AIR FILTER AND EXHAUST AIR FILTERS – BOTH FILTERS SHALL BE MERV 8.
2. UNIT TO INCLUDE FROST CONTROL: MODULATING WHEEL.
3. UNIT TO INCLUDE MOTORIZED FACTORY INSULATED LOW LEAKAGE DAMPERS (EXHAUST AND SUPPLY).
4. UNIT TO INCLUDE MODULATING FAN VFD'S FOR SOFT START.
5. UNIT TO INCLUDE DIRTY FILTER SENSORS (OUTDOOR AND EXHAUST).
6. UNIT TO INCLUDE CONTROL PANEL WITH DIRTY FILTER LIGHT, FROST CONTROL LIGHT, HAND/OFF/AUTO SWITCH, ON/OFF LIGHT, ROTATION SENSOR LIGHT.
7. UNIT TO INCLUDE ROTATION SENSOR AND VAPOR TIGHT LIGHTS.
8. SUBMITTAL TO INCLUDE WINTER LEAVING AIR TEMPERATURE MINIMUM OF 72 DEGREES.
9. SUBMITTAL TO INCLUDE ASHRAE SUMMER DESIGN (94.1/76.8), DEHUMIDIFICATION (83.4/79.3), AND EVAPORATION (88.5/80.1) DESIGN FOR OUTSIDE AIR CONDITIONS.
10. UNIT TO INCLUDE HINGED ACCESS DOORS.
11. UNIT TO INCLUDE 1 SPARE SET OF BELTS AND FILTERS.
12. UNIT SHALL BE INTERFACED TO BUILDING AUTOMATION SYSTEM. UNIT NETWORK PROTOCOL SHALL BE BACNET IP. COORDINATE WITH CONTROLS SUB-CONTRACTOR.
13. UNIT TO INCLUDE 3 YEAR WARRANTY, 5 YEAR EXTENDED COMPRESSOR WARRANTY.
14. PROVIDE PURGE SECTION FOR ALL ENERGY RECOVERY UNITS.
15. UNIT TO INCLUDE FACTORY CONVENIENCE OUTLET.
16. UNIT TO INCLUDE FACTORY REMOTE PANEL, ROTATION SENSOR, CONDENSATE OVERFLOW SWITCH, AND CONDENSATE DRAIN TRAP.
17. UNIT TO INCLUDE FACTORY SMOKE DETECTORS (SUPPLY AND EXHAUST).
18. UNIT TO INCLUDE DIGITAL SCROLL COMPRESSORS.
19. UNIT TO INCLUDE FACTORY MODULATING HOT GAS REHEAT FOR DEHUMIDIFICATION.
20. UNIT TO INCLUDE UNOCCUPIED RECIRCULATING MODE.
21. UNIT FINISH SHALL BE FACTORY PERMATECTOR.
22. UNIT TO INCLUDE BIOCLIMATIC (OR APPROVED EQUAL) BI-POLAR IONIZATION UNIT (NEEDLEPOINT) MOUNTED IN UNIT SUPPLY DUCT PER MANUFACTURER'S RECOMMENDATION. IONIZATION UNIT SHALL BE POWERED FROM ASSOCIATED UNIT.
23. ALL UNITS SHALL INCLUDE TACO PUMP 1915, 0.5 H.P., 120-1-60, 35 GPM, 25 FT. HEAD LOSS. ALL PUMPS TO BE STARTED AND STOPPED WITH UNIT COMPRESSOR. ALL ELECTRICAL REQUIRED FOR THIS OPERATION/CONNECTION SHALL BE FURNISHED AND INSTALLED BY THE DDC SYSTEM INSTALLER.
24. ALL UNITS SHALL BE ASHRAE 90.1-2013 COMPLIANT.
25. UNIT TO INCLUDE UV-C PROTECTION. EQUIPMENT SHALL BE FRESH-AIRE UV AIRBORNE DUCT SYSTEM MODEL TUV-C-ADS (OR APPROVED EQUAL).
26. SEE TOTAL ENERGY RECOVERY UNIT DETAILS ON SHEET RM2.8 FOR ADDITIONAL INFORMATION.

APPROVED EQUALS: GREENHECK, SEMCO, TRANE, VALENT, AND VENMAR

READINESS CENTER
AIR / DIRT SEPARATOR SCHEDULE

MARK NO.	SYSTEM	SIZE (INCHES)	GPM	MAX. PD (FT.)	TYPE	MANUFACTURER (OR APPROVED EQUAL)	UNIT MODEL NO.	NOTES
AS R1	HVAC WATER	6"	439.7	2	TANK – HIGH VELOCITY (AIR/DIRT)	SPIROTHERM	VHN600	SEE BELOW
AS R2	GEOTHERMAL LOOP	8"	386.5	1	TANK – HIGH VELOCITY (AIR/DIRT)	SPIROTHERM	VHN800	SEE BELOW

1. ASME CERTIFIED

READINESS CENTER
EXPANSION TANK SCHEDULE

MARK NO.	SYSTEM	TANK VOLUME (GAL)	SHIPPING WEIGHT (LBS)	CHARGE PRESSURE PSI	DIAMETER (IN.)	HEIGHT (IN.)	MANUFACTURER (OR APPROVED EQUAL)	UNIT MODEL NO.	NOTES
ET R1	HVAC WATER	158	460	25	30"	71-7/8"	TACO	CA600-125	SEE BELOW

1. ASME CERTIFIED

READINESS CENTER
HVAC SCHEDULES

WHORTON ENGINEERING, INC.
HVAC – PLUMBING – PROCESS CONTROL
RANDALL WHORTON, P.E.
PHONE: (256) 820-9897
25 SUMMERALL GATE ROAD
ANNISTON, ALABAMA 36205
WHORTON ENGINEERING PROJECT NO. 22164

ALABAMA REGISTERED No.14192 PROFESSIONAL ENGINEER RANDALL D. WHORTON
11-05-2024

SS&L ARCHITECTS
Montgomery | Dothan | Auburn | Huntsville | Pensacola
WWW.SSLARCH.COM | 256.285.1063

Rev.	Description	Date

Job Number 21112
AL ARNG IFB # AC-25-B-0006-S
Date NOVEMBER 1, 2024
Drawn By JH
Checked By RDW

Project Title
HUNTSVILLE READINESS CENTER
5180 MOORE'S MILL ROAD
HUNTSVILLE AL, 35811

Sheet Title
READINESS CENTER HVAC SCHEDULES

Sheet Number
RM1.4

READINESS CENTER
KITCHEN HOOD (KH-R1)

HOOD NO.	GREENHECK MODEL STYLE / CONFIGURATION	HOOD DIMENSIONS			GREASE CUP OR DRAIN	COOKING LOAD/ DUTY RATING	TOTAL WEIGHT (LBS)	SECTION LOCATION
		LENGTH	WIDTH	HEIGHT				
1	GHEW-122-S WALL CANOPY	122 IN.	60 IN.	24 IN.	YES	HEAVY	469	LEFT
2	GHEW-122-S WALL CANOPY	122 IN.	60 IN.	24 IN.	YES	HEAVY	409	RIGHT

HOOD NO.	ILLUMINATION DETAILS			GREASE FILTRATION DETAILS			
	FIXTURE TYPE BULB / LAMP INFO	QUANTITY	INTENSITY FT CANDLES	TYPE / MODEL MATERIAL	QUANTITY	LENGTH	HEIGHT
1	INCANDESCENT (GLOBE) 100W A19 (BULBS NOT INCL.)	6	50.6	BAFFLE STAINLESS STEEL	0	16 INCHES	20 INCHES
					6	20 INCHES	
2	INCANDESCENT (GLOBE) 100W A19 (BULBS NOT INCL.)	6	50.6	BAFFLE STAINLESS STEEL	0	16 INCHES	20 INCHES
					6	20 INCHES	

HOOD SECTION # COLLAR #	EXHAUST PLENUM COLLARS						
	DISTANCE TO CENTER (IN.)	WIDTH (IN.)	LENGTH (IN.)	DIAMETER (IN.)	VOLUME (CFM)	S.P. (IN. WC)	TOTAL CFM
1 / 1	N/A	10	27	N/A	2,840	0.487	2,840
2 / 1	N/A	10	27	N/A	2,840	0.487	2,840

HOOD SECTION # PLENUM LOCATION	EXTERNAL SUPPLY PLENUM COLLARS						
	QUANTITY	WIDTH (IN.)	LENGTH (IN.)	DIAMETER (IN.)	VOLUME (CFM)	S.P. (IN. WC)	VELOCITY (FT/MIN)
1 / FRONT	3	16	30	N/A	2,500 (833 EACH)	0.01	250
2 / FRONT	3	16	30	N/A	2,500 (833 EACH)	0.01	250

OPTIONS AND ACCESSORIES FOR KH-R1

1. 430 18 GAUGE STAINLESS STEEL WHERE EXPOSED.
2. UL 710 LISTED WITH OUT EXHAUST FIRE DAMPER – UL #MH11726.
3. HOOD TOP INSULATED FOR ZERO CLEARANCE TO COMBUSTIBLES.
4. CEILING ENCLOSURES – FRONT, LEFT – FIELD INSTALLED (VERIFY HEIGHT REQUIRED WITH ARCHITECTURAL REFLECTED CEILING PLANS, ENCLOSURE SHALL CONCEAL DUCTWORK AND EXTEND MINIMUM 3" ABOVE CEILING).
5. FACTORY MOUNTED EXHAUST COLLAR(S).
6. FILTER REMOVAL TOOL INCLUDED – QUANTITY 1.
7. INCLUDES PERFORMANCE ENHANCING LIP (PEL) TECHNOLOGY.
8. STANDING SEAM CONSTRUCTION FOR SUPERIOR STRENGTH.
9. EMBOSSED STAINLESS STEEL FINISH FOR HIGH CORROSION RESISTANCE.
10. HOOD SHALL INCLUDE FACTORY MOUNTED HEAT/TEMPERATURE SENSOR TO AUTOMATICALLY START KITCHEN HOOD FANS.
11. HOOD SHALL INCLUDE HOOD MOUNTED LIGHTED TOGGLE SWITCHES FOR LIGHTS AND FANS.
12. KFCC-R1 PANEL SHALL INCLUDE FACTORY STAINLESS STEEL FACEPLATE FOR FLUSH MOUNTING AND A JUNCTION BOX.
13. KFCC-R1 PANEL REQUIRES 120-1-60.
14. HOOD SHALL INCLUDE ANSUL FIRE PROTECTION SYSTEM WITH CONTROLS, PULL STATION, ETC. IN ACCORDANCE WITH NFPA, STATE, AND LOCAL CODES.
15. HOOD SUPPLY PLENUM SHALL BE FACTORY INSULATED.
16. HOOD SHALL INCLUDE MANUAL PULL STATION FOR KITCHEN EXHAUST HOOD FIRE EXTINGUISHING SYSTEM. REFERENCE PLANS FOR LOCATION. MANUAL PULL STATION SHALL BE MOUNTED 48" TO HIGHEST OPERABLE CONTROL POINT. LABEL PULL STATION TO CLEARLY IDENTIFY HAZARD PROTECTED. ENTIRE INSTALLATION SHALL COMPLY WITH 2021 IFC 904.11.1.
17. CONTINUOUS CAPTURE.
18. FINISHED BACK – FULL LENGTH.
19. HOOD SHALL INCLUDE TRIMSTRIPS (84 IN.)
20. BACK INTEGRAL AIR SPACE – 3 INCHES WIDE – ZERO CLEARANCE.
21. RIGHT NON-INTEGRAL AIR SPACE – 1 INCH THICK – ZERO CLEARANCE.

APPROVED EQUALS: ACCUREX, CAPTIVE AIRE, AND LARKIN.

READINESS CENTER
ELECTRICAL CONTROL BOX - (KFCC-R1)

DESCRIPTION / GREENHECK MODEL MOUNTING LOCATION (CONTROL PANEL / SWITCHES)	EXHAUST FAN QUANTITY	SUPPLY FAN QUANTITY	POWER FREQUENCY
KITCHEN FAN CONTROL CENTER (KFCC) FOR KH-R1 / KFCC-R1 UTILITY CABINET ON HOOD / (FACE MOUNT LEFT END OF HOOD)	2	2	60 CYCLE

1. CONTROL PANEL ENCLOSURE – 16 GA 300 SERIES STAINLESS STEEL ENCLOSURE (NEMA-1) – DIMENSIONS 20"H X 12"W X 6"D. FACTORY MOUNTED – CABINET LEFT END OF HOOD.
2. STARTERS PROVIDED IN CONTROL PANEL – QUANTITY 2.
3. 2 POSITION LIGHT SWITCH – QUANTITY 1.
4. 2 POSITION FAN SWITCH – QUANTITY 1.
5. INTEGRATED EXHAUST TEMPERATURE INTERLOCK SYSTEM.
6. FACTORY MOUNTED EXHAUST TEMPERATURE SENSORS – QUANTITY 2.
7. COMPLIES WITH INTERNATIONAL MECHANICAL CODE.
8. TURN ON EXHAUST IN FIRE.
9. MUA INTERFACE.
10. POWER FOR SHUNT TRIP.
11. THERMAL OVERLOADS IN CABINET.
12. SWITCHES SHALL BE MOUNTED ON HOOD – FACE MOUNT LEFT END OF KH-R1

APPROVED EQUALS: ACCUREX, CAPTIVE AIRE, AND LARKIN.

READINESS CENTER
ELECTRICAL CONTROL BOX (KFCC-R2)

DESCRIPTION / GREENHECK MODEL MOUNTING LOCATION (CONTROL PANEL / SWITCHES)	EXHAUST FAN QUANTITY	SUPPLY FAN QUANTITY	POWER FREQUENCY
KITCHEN FAN CONTROL CENTER (KFCC) FOR KH-R2/ KFCC-R2 UTILITY CABINET ON HOOD / (FACE MOUNT LEFT END OF HOOD)	1	1	60 CYCLE

1. CONTROL PANEL ENCLOSURE – 16 GA 300 SERIES STAINLESS STEEL ENCLOSURE (NEMA-1) – DIMENSIONS 20"H X 12"W X 6"D. FACTORY MOUNTED – CABINET LEFT END OF HOOD.
2. STARTERS PROVIDED IN CONTROL PANEL – QUANTITY 1.
3. 2 POSITION FAN SWITCH – QUANTITY 1.
4. INTEGRATED EXHAUST TEMPERATURE INTERLOCK SYSTEM.
5. FACTORY MOUNTED EXHAUST TEMPERATURE SENSORS – QUANTITY 1.
6. COMPLIES WITH INTERNATIONAL MECHANICAL CODE.
7. TURN ON EXHAUST IN FIRE.
8. POWER FOR SHUNT TRIP.
9. THERMAL OVERLOADS IN CABINET.
10. SWITCHES SHALL BE MOUNTED ON HOOD – FACE MOUNT LEFT END OF KH-R2

APPROVED EQUALS: ACCUREX, CAPTIVE AIRE, AND LARKIN.

READINESS CENTER
KITCHEN HOOD NOTES (KH-R1 / KH-R2)

* VERIFY FINAL HANGING HEIGHT WITH ARCHITECT/ENGINEER PRIOR TO INSTALLATION.

HOOD HANGING HEIGHT FOR FIRE SYSTEMS

VERIFICATION OF HOOD HANGING HEIGHT ABOVE FINISHED FLOOR (A.F.F.) IS REQUIRED FOR CORRECT PLACEMENT OF FIRE SYSTEM NOZZLES.

* RECOMMENDED HANGING HEIGHT = 80" FROM FINISHED FLOOR TO LOWER FRONT EDGE OF HOOD.

READINESS CENTER
KITCHEN HOOD (KH-R2)

HOOD NO.	GREENHECK MODEL STYLE / CONFIGURATION	HOOD DIMENSIONS			GREASE CUP OR DRAIN	COOKING LOAD/ DUTY RATING	TOTAL WEIGHT (LBS)	SECTION LOCATION
		LENGTH	WIDTH	HEIGHT				
1	GD3-42-S WALL CANOPY	42 IN.	42 IN.	24 IN.	N/A	N/A	110	SINGLE

HOOD NO.	LIGHTING DETAILS			BAFFLE FILTRATION DETAILS			
	FIXTURE TYPE BULB / LAMP INFO	QUANTITY	INTENSITY FT CANDLES	TYPE / MODEL MATERIAL	QUANTITY	LENGTH	HEIGHT
1	N/A	N/A	N/A	TWO SIDES	N/A	N/A	N/A
					N/A	N/A	

HOOD SECTION # COLLAR #	EXHAUST PLENUM COLLARS						
	DISTANCE TO CENTER (IN.)	WIDTH (IN.)	LENGTH (IN.)	DIAMETER (IN.)	VOLUME (CFM)	S.P. (IN. WC)	VELOCITY (FT/MIN)
1 / 1	N/A	6	9	N/A	600	0.307	N/A

HOOD SECTION # PLENUM LOCATION	EXTERNAL SUPPLY PLENUM COLLARS						
	QUANTITY	WIDTH (IN.)	LENGTH (IN.)	DIAMETER (IN.)	VOLUME (CFM)	S.P. (IN. WC)	VELOCITY (FT/MIN)
1 / FRONT	1	12	30	N/A	480	0.01	192

OPTIONS AND ACCESSORIES FOR KH-R2

1. 430 18 GAUGE STAINLESS STEEL WHERE EXPOSED.
2. CEILING ENCLOSURES – FRONT, LEFT, RIGHT – FIELD INSTALLED (VERIFY HEIGHT REQUIRED WITH ARCHITECTURAL REFLECTED CEILING PLANS, ENCLOSURE SHALL CONCEAL DUCTWORK AND EXTEND MINIMUM 3" ABOVE CEILING).
3. FACTORY MOUNTED EXHAUST COLLAR(S).
4. HOOD SHALL INCLUDE FACTORY MOUNTED HEAT/TEMPERATURE SENSOR TO AUTOMATICALLY START KITCHEN HOOD FANS.
5. HOOD SHALL INCLUDE HOOD MOUNTED LIGHTED TOGGLE SWITCHES FOR LIGHTS AND FANS.
6. KFCC PANEL SHALL INCLUDE FACTORY STAINLESS STEEL FACEPLATE FOR FLUSH MOUNTING AND A JUNCTION BOX.
7. KFCC PANEL REQUIRES 120-1-60.

APPROVED EQUALS: ACCUREX, CAPTIVE AIRE, AND LARKIN.

READINESS CENTER
ANSUL SYSTEM TESTING NOTES

1. CONTRACTOR MUST SUPPLY ALTERNATE HEAT SOURCE TO TEST KITCHEN HOOD/ANSUL SYSTEM. TESTING SHALL INCLUDE TEMP-FAN INTERLOCK, SUPPLY FAN SHUT-OFF, GAS SOLENOID SHUT-OFF, ELECTRICAL SHUNT-TRIP, EXHAUST FAN, ETC. TESTING SHALL OCCUR PRIOR TO KITCHEN COOKING EQUIPMENT ARRIVAL.

READINESS CENTER
KITCHEN HOOD DUCTWORK NOTES

1. SLOPE HORIZONTAL SECTIONS OF KITCHEN HOOD EXHAUST DUCT A MINIMUM OF 1/4 PER FOOT AS REQUIRED BY 2021 IMC.
2. INSTALL CLEANOUTS IN GREASE DUCT TO ALLOW FOR SERVICING/CLEANING.
3. GREASE DUCT SHALL BE WELDED STAINLESS STEEL.
4. LIGHT TEST SHALL BE PERFORMED AS PER 2021 IMC 506.3.2.5

READINESS CENTER
HVAC SCHEDULES

WHORTON ENGINEERING, INC.

HVAC – PLUMBING – PROCESS CONTROL

RANDALL WHORTON, P.E.
PHONE: (256) 820-9897

25 SUMMERALL GATE ROAD
ANNISTON, ALABAMA 36205

WHORTON ENGINEERING PROJECT NO. 22164

SS&L ARCHITECTS
Montgomery | Dothan | Auburn | Huntsville | Pensacola
WWW.SSLARCH.COM | 256.285.1063

Rev.	Description	Date

Job Number: 21112

AL ARNG IFB #: AC-25-B-0006-S

Date: NOVEMBER 1, 2024

Drawn By: JH

Checked By: RDW

Project Title

HUNTSVILLE READINESS CENTER
5180 MOORE'S MILL ROAD
HUNTSVILLE AL, 35811

Sheet Title: READINESS CENTER HVAC SCHEDULES

Sheet Number: RM1.5

STATE OF ALABAMA LICENSED PROFESSIONAL ENGINEER No.14192 RANDALL D. WHORTON
11-05-2024

READINESS CENTER
TEMPERED MAKE-UP AIR UNIT SCHEDULE

KSF-R1A
KSF-R1B

MARK	GREENHECK MODEL	VOLUME	EXTERNAL SP	TOTAL SP	WEIGHT	SCCR	NOTES
KSF-R1A KSF-R1B	IGX-P115-H12-MF-G	2,500 CFM	1.0 IN. WG	1.415 IN. WG	1,132 LB	5KA	SEE BELOW

MOTOR INFORMATION

SIZE	V/C/P	ENCLOSURE	MOTOR WITH SHAFT GROUNDING	MOTOR RPM	OPERATING POWER	MCA	MOP
3 H.P.	208/60/3	ODP	NO	1725	1 H.P.	14.6	20

HEATING

HEATING TYPE	GAS TYPE	TEMPERATURE			ENERGY			CONNECT. GAS	BUILDING GAS PRESSURE	CONTROL ACCESS
		WINTER DB	MAX Δ	MAX LAT	INPUT	OUTPUT	EFFICIENCY			
INDIRECT GAS	NATURAL	15.0 F	59.9 F	74.9 F	200 MBH	162 MBH	80%	3/4"	1/2 PSI	RIGHT HAND

OUTLET SOUND POWER BY OCTAVE BAND

62.5	125	250	500	1000	2000	4000	8000	LWA	DBA	SONES
74.9	71.8	72.7	77.1	72.6	72.2	72.1	67.4	79.7	68.7	16.2

- LWA – A WEIGHTED SOUND POWER LEVEL BASED ON ANSI S1.4
- DBA – A WEIGHTED SOUND PRESSURE LEVEL BASE ON 11.F DB ATTENUATION PER OCTAVE BAND AT 5.0 FT.
- NOISE CRITERIA (NC) BASED ON AN AVERAGE ATTENUATION OF 11.5 DB PER OCTAVE BAND AT 5.0 FT.

OPTIONS AND ACCESSORIES (KSF-R1A / KSF-R1B)

1. AIR FLOW ARRANGEMENT: OUTDOOR AIR ONLY
2. WEATHERHOOD: ALUMINUM MESH, 16"x20"x2" – (4)
3. FILTER SECTION: MERV13, 16"x20"x2" – (4)
4. DAMPER: INLET
5. OUTDOOR AIR INTAKE POSITION: END
6. DISCHARGE POSITION: DOWNBLAST
7. COATING: GALVANIZED
8. INSULATION: DOUBLE WALL – TEMPERING ON
9. SUPPLY FAN CONTROL: VFD
10. VFD CONTROL: CONSTANT VOLUME
11. 1 SET(S) OF SPARE FILTERS (SHIPS LOOSE)
12. HINGED ACCESS
13. ACCESS SIDE: RIGHT-HAND
14. CONTROL CENTER
15. AIR PROVING CONTACT
16. FREEZE PROTECTION
17. HEAT INLET AIR SENSOR
18. DIRTY FILTER SWITCH
19. UNIT CONTROLS: MICROPROCESSOR
20. TEMPERATURE CONTROL: DISCHARGE

KITCHEN SUPPLY FAN NOTES (KSF-R1A / KSF-R1B)

1. KITCHEN HOOD AND MOTORS/FANS FURNISHED AND INSTALLED BY HVAC CONTRACTOR.
2. ELECTRICAL CONTRACTOR TO FURNISH AND INSTALL ALL ELECTRICAL ASSOCIATED WITH THE KITCHEN HOOD AND KITCHEN HOOD FANS.
3. ENTIRE INSTALLATION TO BE IN ACCORDANCE WITH NFPA 96.
4. MECHANICAL CONTRACTOR SHALL FURNISH AND INSTALL ALL MOTOR STARTERS.
5. ALL KITCHEN HOODS SHALL INCLUDE HEAT SENSOR TO AUTOMATICALLY START FANS.
6. FAN TO INCLUDE PRE-WIRED DISCONNECT AND SPARE BELT SET.
7. KITCHEN SUPPLY FAN SHALL SHUT OFF UPON ACTIVATION OF THE EXTINGUISHING SYSTEM IN ACCORDANCE WITH NFPA 96.
8. INSTALLATION SHALL INCLUDE FACTORY ROOF CURB FOR ALL ROOF MOUNTED FANS. ROOF MOUNTED FANS SHALL BE HIGH WIND RATED (DESIGNED TO WITHSTAND WIND LOADS OF UP TO 150 MPH). HIGH WIND RATING SHALL BE DELIVERED FROM FACTORY WITH THIRD PARTY CERTIFICATION. COORDINATE ALL ROOF CURBS WITH THE ROOFING CONTRACTOR. PRIME AND PAINT ROOF CURB TO MATCH ROOF.
9. FAN TO INCLUDE WEATHERHOOD AND DAMPER.
10. FAN SHALL BE UL LISTED.
11. ALL ROOF MOUNTED FANS SHALL BE LOCATED MINIMUM 10 FEET FROM ROOF EDGE (TYPICAL).
12. SUPPLY FAN TO INCLUDE INDIRECT GAS-FIRED HEATER (200 MBH INPUT/162 MBH OUTPUT) AND CONTROL WITH DISCHARGE AIR SENSOR INTERFACED TO THE BUILDING AUTOMATION SYSTEM.
13. MECHANICAL CONTRACTOR SHALL PROVIDE ALL 3-PHASE EQUIPMENT WITH PHASE LOSS PROTECTION.
14. SEE HVAC PLANS FOR LOCATION AND TEMPERED MAKE-UP AIR UNIT DETAILS FOR ADDITIONAL INFORMATION.

APPROVED EQUALS: ACCUREX, CAPTIVE AIRE, AND LOREN COOK

READINESS CENTER
KITCHEN FAN SCHEDULE

MARK NO.	SERVICE	MOUNTING	CFM	STATIC IN W.G.	H.P./VOLTAGE	MANUFACTURER (OR APPROVED EQUAL)	MANUFACTURER MODEL NO.	UNIT WEIGHT (LBS.)	NOTES
KEF R1A	EXHAUST	ROOF	2,840	1.75	1.5 H.P. 208-3-60	GREENHECK	USGF-180-15	311	SEE BELOW
KEF R1B	EXHAUST	ROOF	2,840	1.75	1.5 H.P. 208-3-60	GREENHECK	USGF-180-15	311	SEE BELOW
KEF R2	EXHAUST	ROOF	600	0.75	0.25 H.P. 115-1-60	GREENHECK	USGF-140HP-4	188	SEE BELOW
KSF R1A	SEE TEMPERED MAKE-UP AIR UNIT SCHEDULE FOR KITCHEN SUPPLY FAN (KSF-R1A)								
KSF R1B	SEE TEMPERED MAKE-UP AIR UNIT SCHEDULE FOR KITCHEN SUPPLY FAN (KSF-R1B)								
KSF R2	SUPPLY	ROOF	480	0.75	0.5 H.P. 115-1-60	GREENHECK	KSQ-7-M1-VG	82	SEE BELOW

1. KITCHEN HOOD AND MOTORS/FANS FURNISHED AND INSTALLED BY HVAC CONTRACTOR.
2. ELECTRICAL CONTRACTOR TO FURNISH AND INSTALL ALL ELECTRICAL ASSOCIATED WITH THE KITCHEN HOOD AND KITCHEN HOOD FANS.
3. ENTIRE INSTALLATION TO BE IN ACCORDANCE WITH NFPA 96.
4. MECHANICAL CONTRACTOR SHALL FURNISH AND INSTALL ALL MOTOR STARTERS.
5. ALL KITCHEN HOODS SHALL INCLUDE HEAT SENSOR TO AUTOMATICALLY START FANS.
6. ALL KITCHEN FANS SHALL BE UL 705 LISTED.
7. INSTALLATION SHALL INCLUDE FACTORY ROOF CURB FOR ROOF MOUNTED FANS. COORDINATE ALL ROOF CURBS WITH THE ROOFING CONTRACTOR. PRIME AND PAINT ROOF CURB TO MATCH ROOF. ALL FANS SHALL BE HIGH WIND RATED (DESIGNED TO WITHSTAND WIND LOADS OF UP TO 150 MPH). HIGH WIND RATING SHALL BE DELIVERED FROM FACTORY WITH THIRD PARTY CERTIFICATION.
8. ALL ROOF MOUNTED FANS SHALL BE LOCATED MINIMUM 10 FEET FROM ROOF EDGE (TYPICAL).
9. ALL KITCHEN EXHAUST FANS TO INCLUDE PRE-WIRED NEMA DISCONNECT AND SPARE BELT SET.
10. MECHANICAL CONTRACTOR SHALL PROVIDE ALL 3-PHASE EQUIPMENT WITH PHASE LOSS PROTECTION.
11. ALL KITCHEN SUPPLY FANS TO INCLUDE PREWIRED DISCONNECT, DAMPER, SPARE BELT SET, AND WEATHERHOOD.
12. KEF-R1A, KEF-R1B, KEF-R2: SWITCH, NEMA-3R, TOGGLE, JUNCTION BOX MOUNTED AND WIRED / HINGED BASE / HIGH TEMP CURB SEAL / FAN AND ATTACHED ACC. COATED WITH PERMATECTOR / NON-STICK COATED WHEEL / GREASE TRAP / HEAT BAFFLE / BEARINGS WITH GREASE FITTINGS – L10 LIFE OF 100,000 HRS. / CLEAN-OUT PORT / CONDUIT CHASE / BIRDSCREEN / TIE DOWN POINTS – SET OF 4 / STAINLESS STEEL FASTENERS – 300 SERIES.
13. KSF-R2: SWITCH, NEMA-3R, HEAVY DUTY WITH AUXILIARY CONTACT, JUNCTION BOX MOUNTED AND WIRED / BOTTOM WEATHERHOOD INTAKE / BOTTOM (CURB MOUNTED) DISCHARGE / COMPOSITE MIXED FLOW WHEEL / COMPOSITE INLET CONE / 1" ALUMINUM PRIMARY FILTER / 2" MERV 13 SECONDARY FILTER / BIRDSCREEN / TIE DOWN POINTS – SET OF 4 / STAINLESS STEEL FASTENERS – 300 SERIES.
14. SEE HVAC PLANS FOR LOCATION AND KITCHEN FAN DETAILS FOR ADDITIONAL INFORMATION.

APPROVED EQUALS: ACCUREX, CAPTIVE AIRE, AND LOREN COOK

SEE KITCHEN EXHAUST FAN (KEF-R1A/KEF-R1B/KEF-R2), TEMPERED MAKE-UP AIR UNIT (KSF-R1A/KSF-R1B), AND KITCHEN SUPPLY FAN (KSF-R2) DETAILS ON SHEET RM2.6 FOR ADDITIONAL INFORMATION.

READINESS CENTER
KITCHEN AIR BALANCE SCHEDULE

EXHAUST AIR				OUTSIDE AIR		
UNIT	OSA CFM	EXHAUST CFM		UNIT	OSA CFM	EXHAUST CFM
KEF-R1A	0	2,840		KSF-R1A	2,500	0
KEF-R1B	0	2,840		KSF-R1B	2,500	0
KEF-R2	0	600		KSF-R2	480	0
OSA-R2 (KITCHEN)	0	445		OSA-R2 (SCULLERY)	150	0
				OSA-R2 (KITCHEN)	475	0
				TRANSFER	660	0
TOTAL		6,725		TOTAL	6,765	
NET EXFILTRATION = 40 CFM						

READINESS CENTER
HVAC SCHEDULES

WHORTON ENGINEERING, INC.
HVAC – PLUMBING – PROCESS CONTROL
RANDALL WHORTON, P.E.
PHONE: (256) 820-9897
25 SUMMERALL GATE ROAD
ANNISTON, ALABAMA 36205

WHORTON ENGINEERING PROJECT NO. 22164

ALABAMA LICENSED PROFESSIONAL ENGINEER No.14192 RANDALL D. WHORTON
11-05-2024

SS&L ARCHITECTS
Montgomery | Dothan | Auburn | Huntsville | Pensacola
WWW.SSLARCH.COM | 256.285.1063

Rev.	Description	Date

Job Number: 21112
AL ARNG IFB #: AC-25-B-0006-S
Date: NOVEMBER 1, 2024
Drawn By: JH
Checked By: RDW

Project Title
HUNTSVILLE READINESS CENTER
5180 MOORE'S MILL ROAD
HUNTSVILLE AL, 35811

Sheet Title
READINESS CENTER HVAC SCHEDULES

Sheet Number
RM1.6

READINESS CENTER
PLATE TYPE HEAT EXCHANGER SCHEDULE

MARK NO.	HYDRONIC BUILDING WATER (HOT SIDE)					GEOTHERMAL LOOP (COLD SIDE)					MODEL NO. DATA	WEIGHT (LBS)	NOTES
	FLUID	GPM	ENTERING WATER TEMP. (°F)	LEAVING WATER TEMP. (°F)	WATER PRESSURE DROP (MAXIMUM)	FLUID	GPM	ENTERING WATER TEMP. (°F)	LEAVING WATER TEMP. (°F)	WATER PRESSURE DROP (MAXIMUM)	MANUFACTURER (OR APPROVED EQUAL)		
HX R1	WATER	502	90'	75'	5 FT.	WATER	502	65'	80'	5 FT.	DANFOSS SONDEX PHE-TYPE	3,262	SEE BELOW

DESIGN OF FRAME / PLATES:

1. PLATE MATERIAL/THICKNESS: 0.0157 INCH AISI 304.
2. GASKET MATERIAL: NITRIL HT HANG ON (H).
3. MAXIMUM DESIGN TEMPERATURE: 150 (°F).
4. MAXIMUM DESIGN/TEST PRESSURE: 150/195 (PSI).
5. MAXIMUM DIFFERENTIAL PRESSURE: 150 (PSI).
6. UNIT SHALL INCLUDE ASME STAMP AND SHALL BE AHRI CERTIFIED.
7. CONNECTIONS HOT SIDE: 8 INCH STUDDED END CONNECTION, #150
8. CONNECTIONS COLD SIDE: 8 INCH STUDDED END CONNECTION, #150
9. SEE PLATE TYPE HEAT EXCHANGER PIPING DIAGRAM FOR ADDITIONAL INFORMATION.

APPROVED EQUALS: TACO

READINESS CENTER
PUMP SCHEDULE

MARK NO.	SERVICE	TYPE	GPM	TOTAL HEAD FT. WG.	MAXIMUM H.P.	MINIMUM EFFICIENCY	VOLTAGE	MODEL NO. DATA		NOTES
								MANUFACTURER (OR APPROVED EQUAL)	UNIT MODEL NO.	
WP R1	BOREFIELD	FRAME MOUNTED	502	40	7.5	84%	208-3-60	TACO	FI4075	SEE BELOW
WP R2	BOREFIELD	FRAME MOUNTED	502	40	7.5	84%	208-3-60	TACO	FI4075	SEE BELOW
WP R3	UNIT SUPPLY/GPTB HYDRONIC LOOP	FRAME MOUNTED	70	30	1.0	67%	208-3-60	TACO	FI1506	SEE BELOW
WP R4	UNIT SUPPLY/GPTB HYDRONIC LOOP	FRAME MOUNTED	70	30	1.0	67%	208-3-60	TACO	FI1506	SEE BELOW
WP R5	READINESS CENTER HYDRONIC LOOP	FRAME MOUNTED	432	35	7.5	82%	208-3-60	TACO	FI4075	SEE BELOW
WP R6	READINESS CENTER HYDRONIC LOOP	FRAME MOUNTED	432	35	7.5	82%	208-3-60	TACO	FI4075	SEE BELOW

1. FACTORY MOUNTING FRAME TO BE PROVIDED, SUCTION DIFFUSER, 1760 RPM.
2. EACH PUMP SYSTEM SHALL INCLUDE VARIABLE SPEED PUMPING COMPLETE WITH ALL CONTROLS AND BE INTERFACED TO THE BUILDING AUTOMATION SYSTEM. ELECTRONIC VARIABLE SPEED CONTROLS SHALL BE BY BELL AND GOSSETT, ABB, OR AN APPROVED EQUAL. SYSTEM SHALL BE FURNISHED AND INSTALLED IN ACCORDANCE WITH MANUFACTURER'S INSTRUCTIONS AND RECOMMENDATIONS FOR A VARIABLE SPEED WATER SOURCE HEAT PUMP INSTALLATION. FULL COORDINATION WITH THE HEAT PUMP SUPPLIER IS REQUIRED. THE VARIABLE SPEED DRIVE SYSTEM SHALL REQUIRE ONLY SINGLE POINT ELECTRICAL SERVICE AND SHALL INCLUDE A FACTORY DISCONNECT.
3. WP-R1 AND WP-R2 SHALL OPERATE AS LEAD/LAG PUMP AND ROTATE WEEKLY (PUMPS DO NOT RUN SIMULTANEOUSLY).
4. WP-R3 AND WP-R4 SHALL OPERATE AS LEAD/LAG PUMP AND ROTATE WEEKLY (PUMPS DO NOT RUN SIMULTANEOUSLY).
5. WP-R5 AND WP-R6 SHALL OPERATE AS LEAD/LAG PUMP AND ROTATE WEEKLY (PUMPS DO NOT RUN SIMULTANEOUSLY).
6. ALL PUMPS SHALL BE SIZED FOR FLOW PLUS 10% EXTRA CAPACITY.
7. VARIABLE FREQUENCY DRIVES SHALL NOT BE MOTOR MOUNTED. VFD DRIVES SHALL BE SEPARATE FROM THE MOTOR.

APPROVED EQUALS: BELL AND GOSSETT, ARMSTRONG, AURORA, GRUNDFOS, AND PACO

SEE PLATE TYPE HEAT EXCHANGER SCHEDULE FOR ADDITIONAL INFORMATION.

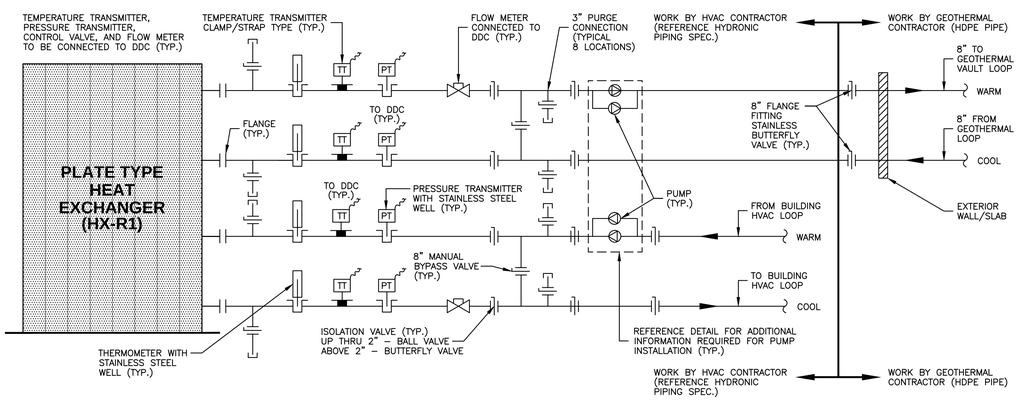

TYPICAL PLATE TYPE HEAT EXCHANGER PIPING DIAGRAM

NOT TO SCALE

READINESS CENTER
CEILING MOUNTED ELECTRIC HEATER SCHEDULE

MARK NO.	NOMINAL CFM	VOLTAGE	K.W.	BTU/HR (000)	AMPS	MANUFACTURER (OR APPROVED EQUAL)	UNIT MODEL NO.	UNIT WEIGHT (LBS)	NOTES
CEH R1	300	208-1-60	2.0	6.8	9.6	BERKO	FFCH-548	27	SEE BELOW
CEH R2	300	208-1-60	2.0	6.8	9.6	BERKO	FFCH-548	27	SEE BELOW
CEH R3	300	208-1-60	2.0	6.8	9.6	BERKO	FFCH-548	27	SEE BELOW
CEH R4	300	208-1-60	2.0	6.8	9.6	BERKO	FFCH-548	27	SEE BELOW
CEH R5	300	208-1-60	2.0	6.8	9.6	BERKO	FFCH-548	27	SEE BELOW
CEH R6	300	208-1-60	2.0	6.8	9.6	BERKO	FFCH-548	27	SEE BELOW

1. UNIT TO INCLUDE A RECESS MOUNTING ENCLOSURE.
2. UNIT TO INCLUDE AUTOMATIC THERMAL CUTOUT AND POWER DISCONNECT.
3. UNIT TO INCLUDE AN INTEGRAL THERMOSTAT.

APPROVED EQUALS: INDEECO, MARKEL, QMARK, AND RAYWALL

READINESS CENTER
HVAC SCHEDULES AND DETAILS

WHORTON ENGINEERING, INC.
HVAC - PLUMBING - PROCESS CONTROL
RANDALL WHORTON, P.E.
PHONE: (256) 820-9897
25 SUMMERALL GATE ROAD
ANNISTON, ALABAMA 36205

WHORTON ENGINEERING PROJECT NO. 22164

SS&L ARCHITECTS
Montgomery | Dothan | Auburn | Huntsville | Pensacola
WWW.SSLARCH.COM | 256.285.1063

Rev.	Description	Date

Job Number: 21112
AL ARNG IFB #: AC-25-B-0006-S
Date: NOVEMBER 1, 2024
Drawn By: JH
Checked By: RDW

Project Title:
HUNTSVILLE READINESS CENTER
5180 MOORE'S MILL ROAD
HUNTSVILLE AL, 35811

Sheet Title:
READINESS CENTER HVAC SCHEDULES AND DETAILS

Sheet Number:
RM1.7

ALABAMA LICENSED PROFESSIONAL ENGINEER No.14192 RANDALL D. WHORTON
11-05-2024

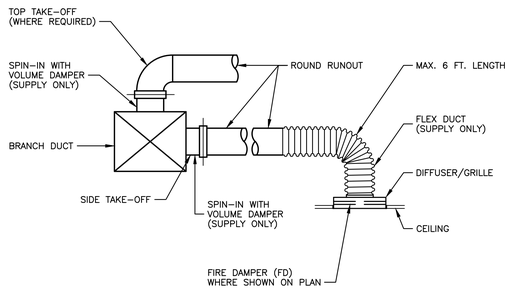

DIFFUSER / GRILLE RUNOUT DETAIL

NOT TO SCALE

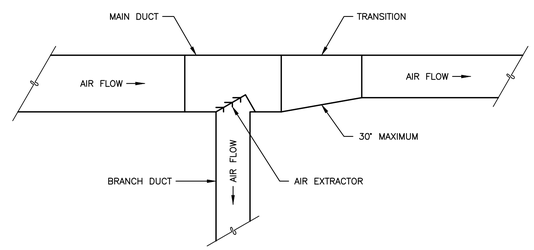

TYPICAL DUCT TAKE OFF DETAIL

NOT TO SCALE

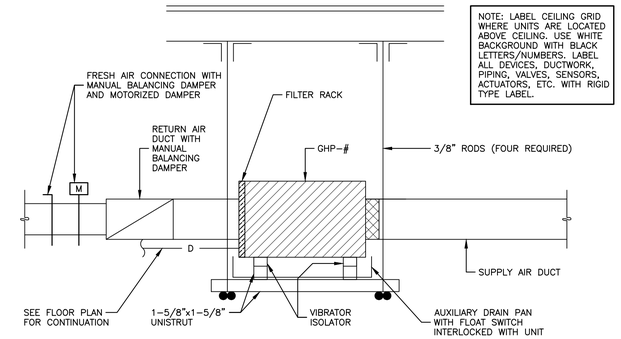

TYPICAL SECTION AT HORIZONTAL INDOOR UNIT

NOT TO SCALE

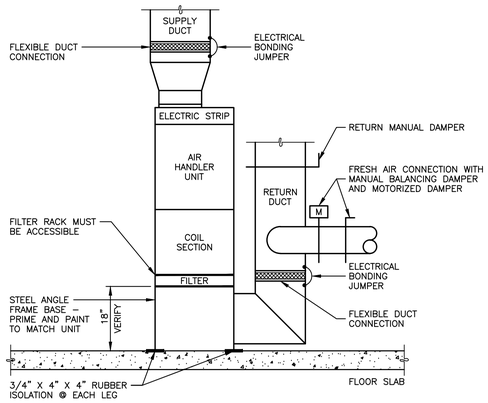

TYPICAL SECTION AT INDOOR UNIT

NOT TO SCALE

METAL CHASE SHALL BE SIZED TO CONCEAL ALL EXTERIOR REFRIGERANT LINES, CONTROL WIRING, AND ELECTRICAL WIRING (TYPICAL).

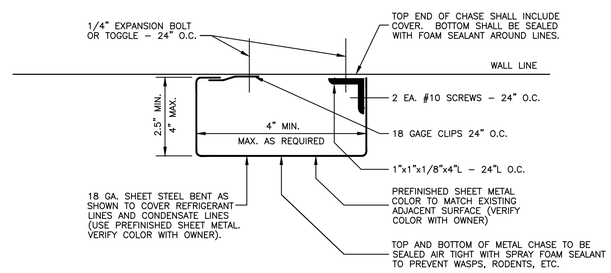

SECTION THROUGH METAL CHASE

NOT TO SCALE

ALL PIPING SHALL BE SPACED ADEQUATELY APART (HOT GAS REHEAT, SUCTION, LIQUID, ETC.) TO ENSURE THAT INSULATION AND JACKETING CAN BE INSTALLED WITH GOOD WORKMANSHIP.

ALL REFRIGERANT LINES SHALL BE SIZED/APPROVED BY THE EQUIPMENT VENDOR/COMPRESSOR MANUFACTURER. ALL REFRIGERANT LINES SHALL BE INSTALLED USING INSULATED LINE CLAMPS.

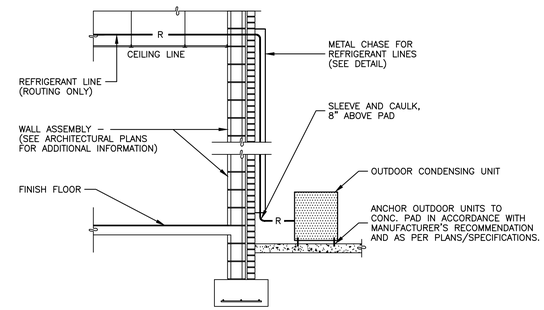

REFRIGERANT LINE ROUTING DETAIL

NOT TO SCALE

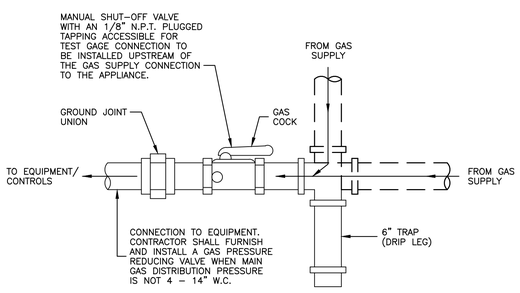

TYPICAL GAS CONNECTION TO EQUIPMENT DETAIL

NOT TO SCALE

1. MARK NO. - LABEL MARK NO. TO MATCH PLANS (EF-1. HP-1. WHP-1, ETC.)
2. UNIT DESCRIPTION - EXHAUST FAN, SPLIT SYSTEM, HEAT PUMP, WATER SOURCE HEAT PUMP, ETC.

1. UNIT MARK NO. - LABEL WITH MARK NO. TO MATCH PLANS (TS-HP-1, TS-WHP-1, ETC.)

NOTE: ALL LABELS SHALL BE RIGID PLASTIC. LABEL ALL DEVICES, DUCTWORK, PIPING, VALVES, SENSORS, ACTUATORS, ETC.

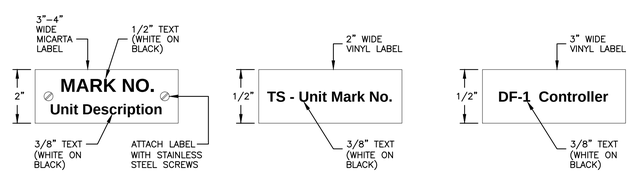

TYPICAL HVAC EQUIPMENT LABEL DETAIL

TYPICAL TEMP. SENSOR / THERMOSTAT LABEL DETAIL

TYPICAL FAN CONTROLLER LABEL DETAIL

HVAC EQUIPMENT LABELING DETAILS

NOT TO SCALE

READINESS CENTER HVAC DETAILS

WHORTON ENGINEERING, INC.

HVAC - PLUMBING - PROCESS CONTROL

RANDALL WHORTON, P.E.
PHONE: (256) 820-9897

25 SUMMERALL GATE ROAD
ANNISTON, ALABAMA 36205

WHORTON ENGINEERING PROJECT NO. 22164

SS&L ARCHITECTS
Montgomery | Dothan | Auburn | Huntsville | Pensacola
WWW.SSLARCH.COM | 256.285.1063

Rev.	Description	Date

Job Number: 21112

AL ARNG IFB #: AC-25-B-0006-S

Date: NOVEMBER 1, 2024

Drawn By: JH

Checked By: RDW

Project Title:

HUNTSVILLE READINESS CENTER
5180 MOORE'S MILL ROAD
HUNTSVILLE AL, 35811

Sheet Title: READINESS CENTER HVAC DETAILS

Sheet Number: RM2.1

STATE OF ALABAMA LICENSED PROFESSIONAL ENGINEER No.14192 RANDALL D. WHORTON
11-05-2024

CONTRACTOR SHALL FURNISH AND INSTALL STRUCTURAL SUPPORTS REQUIRED TO INSTALL FAN IN ACCORDANCE TO INSTALL FAN IN ACCORDANCE WITH MANUFACTURER'S RECOMMENDATIONS. STRUCTURAL SUPPORTS SHALL BE SUBMITTED TO THE ARCHITECT FOR REVIEW AND APPROVAL.

BIG ASS FANS POWERFOIL X4 PPX4 PLUS (18 FT. DIA.) OR APPROVED EQUAL
SEE READINESS CENTER DESTRATIFICATION FAN SCHEDULE DF-R1/DF-R2 FOR ADDITIONAL INFORMATION.

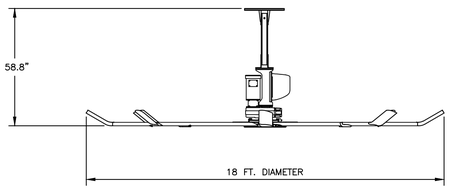

DF-R1 / DF-R2 FAN - ELEVATION VIEW

NOT TO SCALE

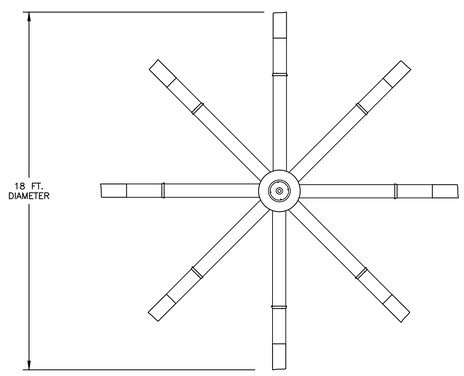

DF-R1 / DF-R2 FAN - PLAN VIEW

NOT TO SCALE

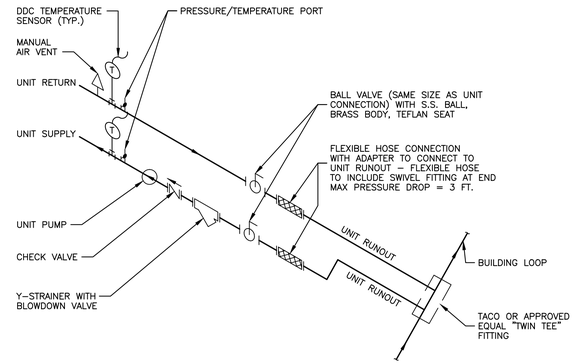

TYPICAL GEOTHERMAL HEAT PUMP CONNECTION DETAIL

NOT TO SCALE

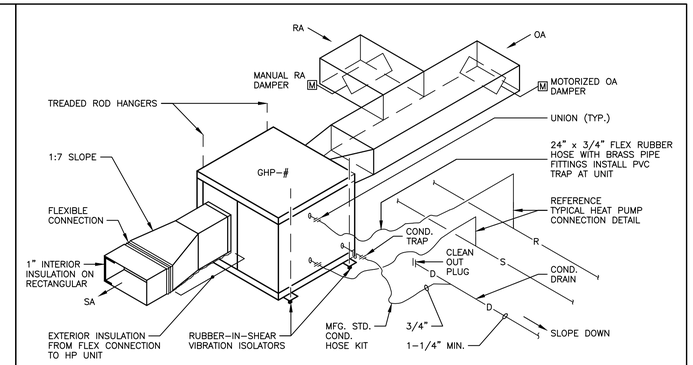

TYPICAL GEOTHERMAL HEAT PUMP CONNECTIONS

NOT TO SCALE

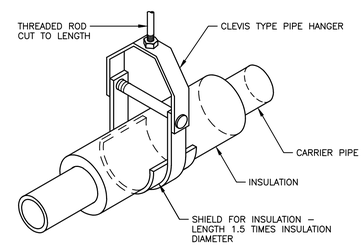

TYPICAL CLEVIS TYPE PIPE HANGER FOR INSULATED PIPE DETAIL

NOT TO SCALE

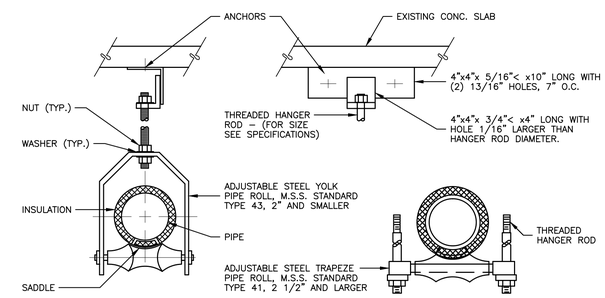

TYPICAL ROLLER PIPE HANGER DETAIL

NOT TO SCALE

NOTE: PROVIDE ACCESS DOOR FOR FIRE DAMPER RESET.

NOTE: DO NOT INSULATE UNTIL AFTER ABOVE CEILING INSPECTION.

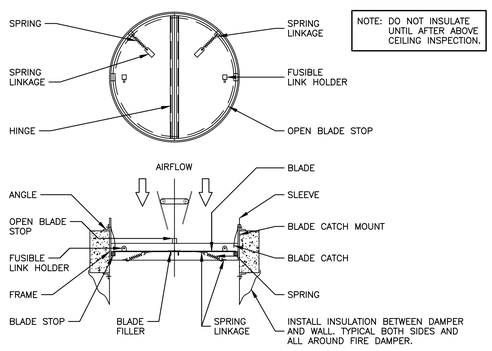

TYPICAL SMALL ROUND FIRE DAMPER INSTALLATION

NOT TO SCALE

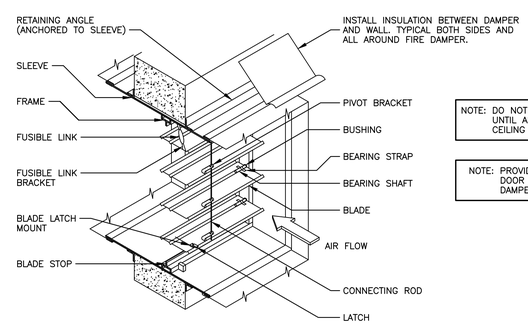

NOTE: DO NOT INSULATE UNTIL AFTER ABOVE CEILING INSPECTION.

NOTE: PROVIDE ACCESS DOOR FOR FIRE DAMPER RESET.

TYPICAL RECTANGULAR FIRE DAMPER INSTALLATION

NOT TO SCALE

READINESS CENTER HVAC DETAILS

WHORTON ENGINEERING, INC.
HVAC – PLUMBING – PROCESS CONTROL
RANDALL WHORTON, P.E.
PHONE: (256) 820-9897
25 SUMMERALL GATE ROAD
ANNISTON, ALABAMA 36205

WHORTON ENGINEERING PROJECT NO. 22164

SS&L ARCHITECTS
Montgomery | Dothan | Auburn | Huntsville | Pensacola
WWW.SSLARCH.COM | 256.285.1063

Rev.	Description	Date

Job Number: 21112
AL ARNG IFB #: AC-25-B-0006-S
Date: NOVEMBER 1, 2024
Drawn By: JH
Checked By: RDW
Project Title:

HUNTSVILLE READINESS CENTER
5180 MOORE'S MILL ROAD
HUNTSVILLE AL, 35811

Sheet Title: READINESS CENTER HVAC DETAILS

Sheet Number: RM2.2

STATE OF ALABAMA
RANDALL D. WHORTON
No.14192
PROFESSIONAL ENGINEER
11-05-2024

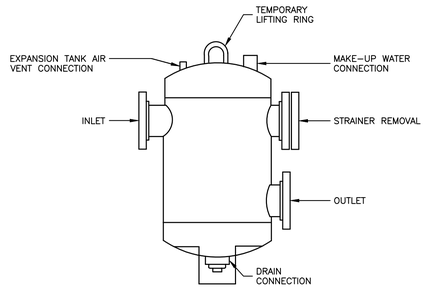

TYPICAL AIR SEPARATOR DETAIL

NOT TO SCALE

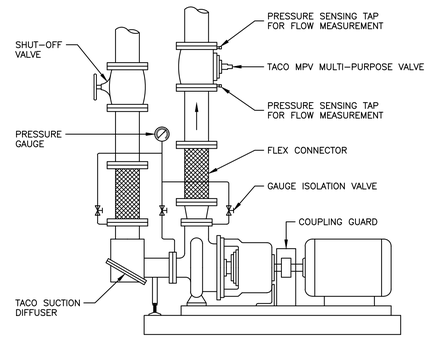

TYPICAL WATER PUMP INSTALLATION

NOT TO SCALE

NOTE: PRECHARGE TANK TO MINIMUM SYSTEM PRESSURE AT TANK LOCATION.

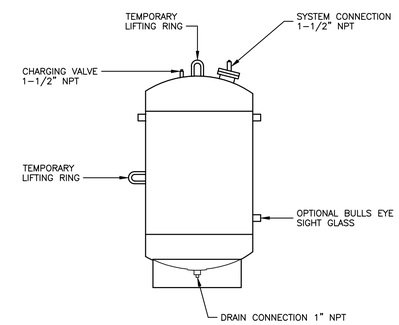

TYPICAL EXPANSION TANK DETAIL

NOT TO SCALE

BOTH THE BUILDING HYDRONIC SYSTEM(S) AND THE SITE GEOTHERMAL SYSTEM SHALL RECEIVE CHEMICAL WATER TREATMENT, PER SPECIFICATION SECTION 23 2513-4 SECTION 3.2 INSTALLATION NOTE 1: "INSTALL BYPASS FEEDER IN A BYPASS CIRCUIT AROUND CIRCULATING PUMPS UNLESS OTHERWISE INDICATED ON DRAWINGS.

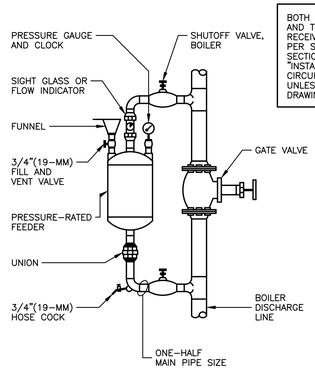

TYPICAL ONE-SHOT CHEMICAL FEEDER

NOT TO SCALE

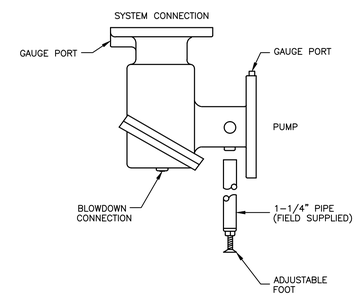

TYPICAL PUMP SUCTION DIFFUSER

NOT TO SCALE

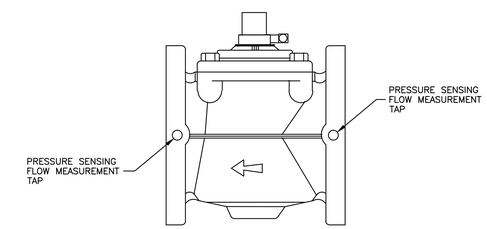

TYPICAL MULTI-PURPOSE VALVE DETAIL

NOT TO SCALE

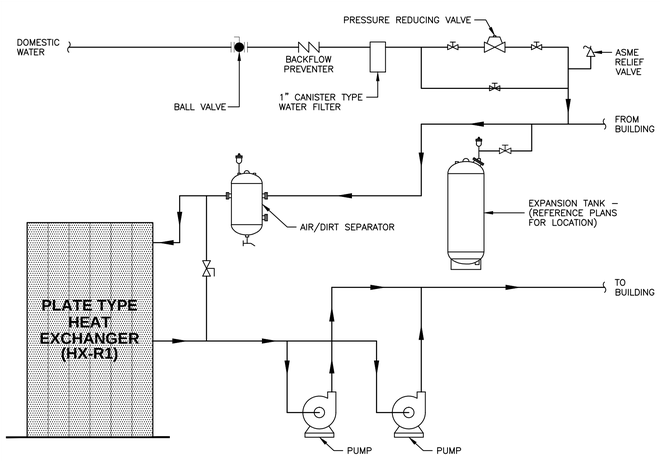

TYPICAL AIR CONTROL SYSTEM PIPING FOR BUILDING LOOP

NOT TO SCALE

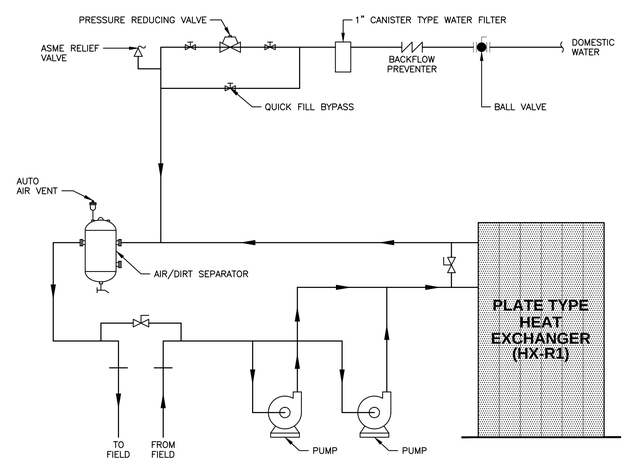

TYPICAL AIR CONTROL SYSTEM PIPING FOR LOOP FIELD

NOT TO SCALE

READINESS CENTER HVAC DETAILS

WHORTON ENGINEERING, INC.

HVAC – PLUMBING – PROCESS CONTROL

RANDALL WHORTON, P.E.
PHONE: (256) 820-9897

25 SUMMERALL GATE ROAD
ANNISTON, ALABAMA 36205

WHORTON ENGINEERING PROJECT NO. 22164

ALABAMA LICENSED PROFESSIONAL ENGINEER No.14192 RANDALL D. WHORTON 11-05-2024

SS&L ARCHITECTS
Montgomery | Dothan | Auburn | Huntsville | Pensacola
WWW.SSLARCH.COM | 256.285.1063

Rev.	Description	Date

Job Number: 21112

AL ARNG IFB #: AC-25-B-0006-S

Date: NOVEMBER 1, 2024

Drawn By: JH

Checked By: RDW

Project Title

HUNTSVILLE READINESS CENTER
5180 MOORE'S MILL ROAD
HUNTSVILLE AL, 35811

Sheet Title: READINESS CENTER HVAC DETAILS

Sheet Number: RM2.3

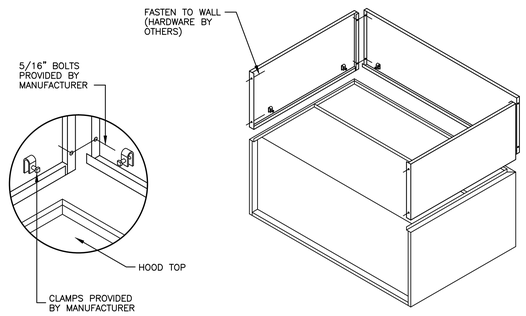

KITCHEN HOOD ENCLOSURE PANEL INSTALLATION DETAIL (KH-R1)

NOT TO SCALE

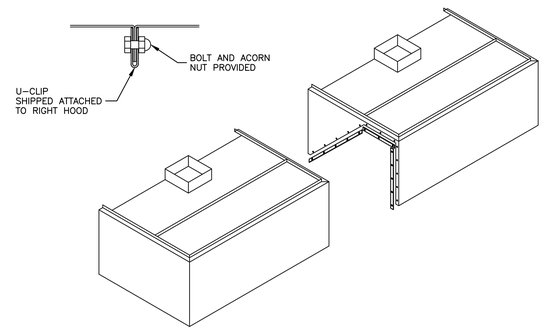

CONTINUOUS CAPTURE PLENUM INSTALLATION DETAIL (KH-R1)

NOT TO SCALE

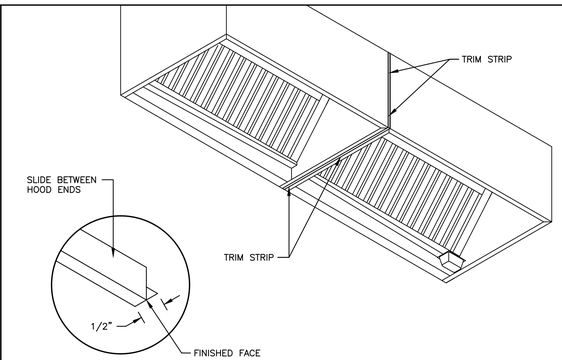

KITCHEN HOOD TRIM STRIP INSTALLATION DETAIL (KH-R1)

NOT TO SCALE

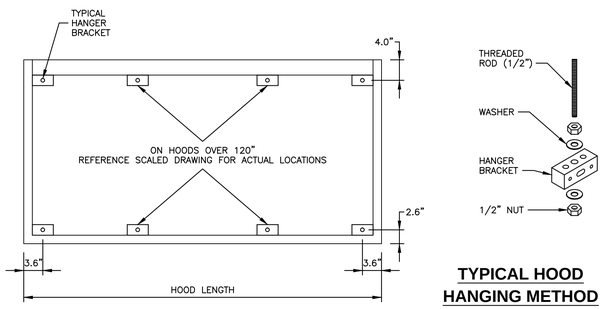

TYPICAL HOOD HANGING METHOD

KITCHEN HOOD HANGER BRACKET DETAIL (KH-R1)

NOT TO SCALE

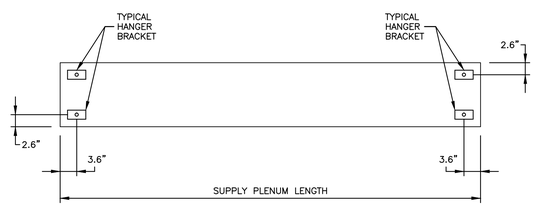

SUPPLY PLENUM HANGER BRACKET DETAIL (KH-R1)

NOT TO SCALE

NOTE: TO BE UL LISTED THERE MUST BE SIDESPLASH PANELS MOUNTED THE FULL WIDTH OF THE HOOD AGAINST THE COMBUSTIBLE WALL.

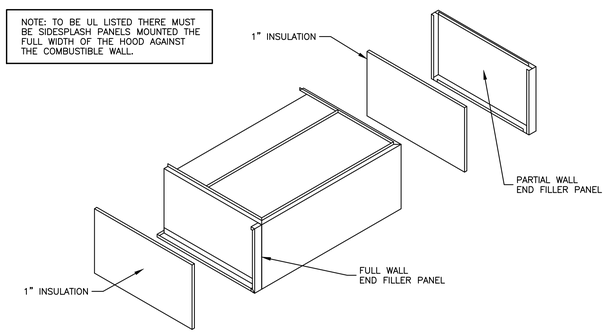

ZERO CLEARANCE TO END OF HOOD INSTALLATION DETAIL (KH-R1)

NOT TO SCALE

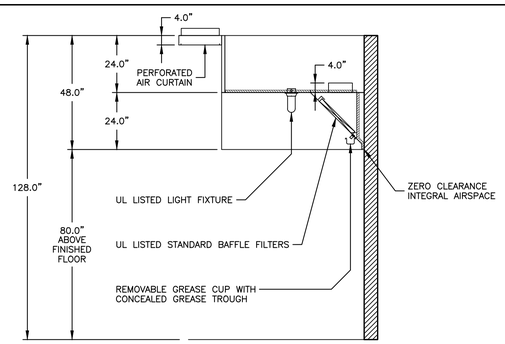

KH-R1 HOOD (LAST HOOD IN ROW)

SECTION VIEW KITCHEN HOOD DETAIL (KH-R1)

NOT TO SCALE

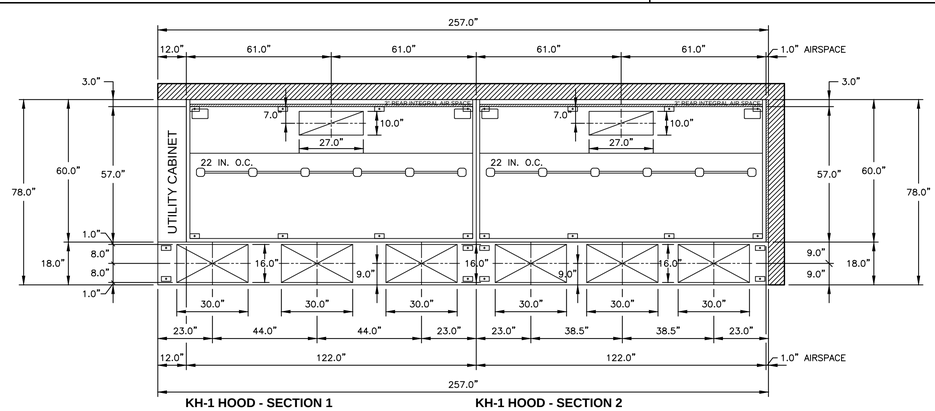

KH-1 HOOD - SECTION 1 **KH-1 HOOD - SECTION 2**

PLAN VIEW - KITCHEN HOOD DETAIL (KH-R1)

NOT TO SCALE

READINESS CENTER HVAC DETAILS

WHORTON ENGINEERING, INC.

HVAC – PLUMBING – PROCESS CONTROL

RANDALL WHORTON, P.E.
PHONE: (256) 820-9897

25 SUMMERALL GATE ROAD
ANNISTON, ALABAMA 36205

WHORTON ENGINEERING PROJECT NO. 22164

S|S&L ARCHITECTS
Montgomery | Dothan | Auburn | Huntsville | Pensacola
WWW.SSLARCH.COM | 256.285.1063

Rev.	Description	Date

Job Number: 21112

AL ARNG IFB #: AC-25-B-0006-S

Date: NOVEMBER 1, 2024

Drawn By: JH

Checked By: RDW

Project Title

HUNTSVILLE READINESS CENTER
5180 MOORE'S MILL ROAD
HUNTSVILLE AL, 35811

Sheet Title: READINESS CENTER HVAC DETAILS

Sheet Number: RM2.4

STATE OF ALABAMA LICENSED PROFESSIONAL ENGINEER No.14192 RANDALL D. WHORTON 11-05-2024

NOTE: TO BE UL LISTED THERE MUST BE BACKSPLASH PANELS MOUNTED THE FULL LENGTH OF THE HOOD AGAINST THE COMBUSTIBLE WALL.

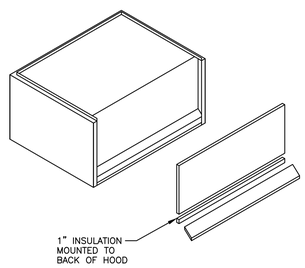

ZERO CLEARANCE TO BACK OF HOOD DETAIL (KH-R1)

NOT TO SCALE

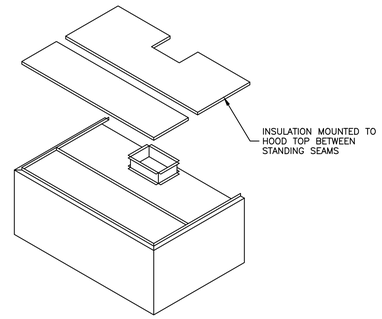

ZERO CLEARANCE TO HOOD TOP DETAIL (KH-R1)

NOT TO SCALE

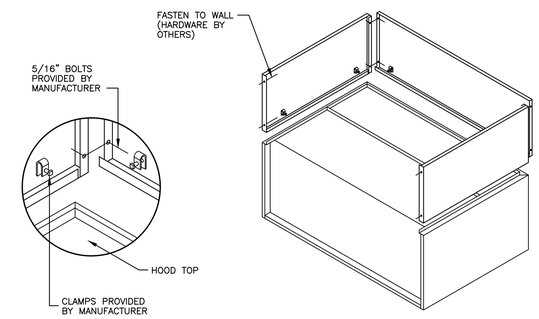

KITCHEN HOOD ENCLOSURE PANEL INSTALLATION DETAIL (KH-R2)

NOT TO SCALE

THE CONDENSATE BAFFLES MUST HOOK ONTO THE UPPER HANGER AND REST IN THE CONDENSATE GUTTER FOR PROPER OPERATION.

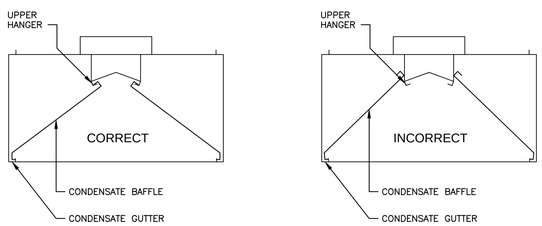

KITCHEN HOOD BAFFLE INSTALLATION DETAIL (KH-R2)

NOT TO SCALE

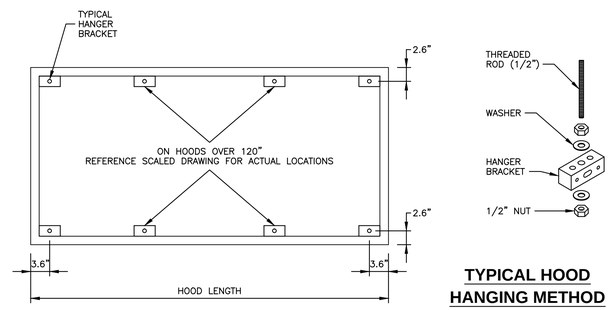

TYPICAL HOOD HANGING METHOD

KITCHEN HOOD HANGER BRACKET DETAIL (KH-R2)

NOT TO SCALE

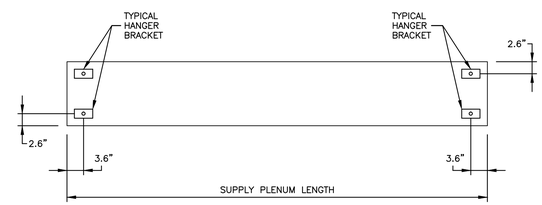

SUPPLY PLENUM HANGER BRACKET DETAIL (KH-R2)

NOT TO SCALE

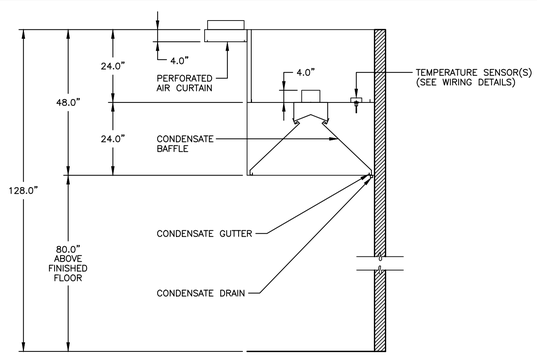

SECTION VIEW (KH-R2) KITCHEN HOOD DETAIL

NOT TO SCALE

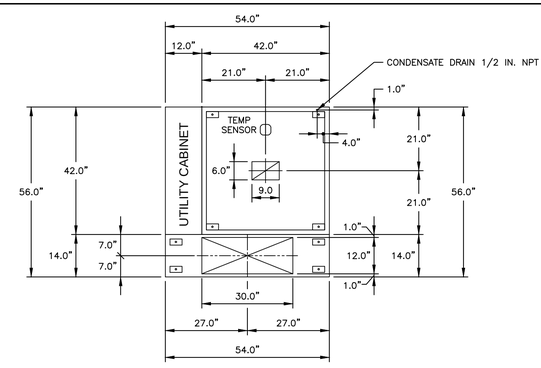

PLAN VIEW (KH-R2) KITCHEN HOOD DETAIL

NOT TO SCALE

READINESS CENTER HVAC DETAILS

WHORTON ENGINEERING, INC.
HVAC – PLUMBING – PROCESS CONTROL
RANDALL WHORTON, P.E.
PHONE: (256) 820-9897
25 SUMMERALL GATE ROAD
ANNISTON, ALABAMA 36205
WHORTON ENGINEERING PROJECT NO. 22164

S|S&L ARCHITECTS
Montgomery | Dothan | Auburn | Huntsville | Pensacola
WWW.SSLARCH.COM | 256.285.1063

Rev.	Description	Date

Job Number: 21112
AL ARNG IFB #: AC-25-B-0006-S
Date: NOVEMBER 1, 2024
Drawn By: JH
Checked By: RDW

Project Title:
HUNTSVILLE READINESS CENTER
5180 MOORE'S MILL ROAD
HUNTSVILLE AL, 35811

Sheet Title: READINESS CENTER HVAC DETAILS

Sheet Number: RM2.5

STATE OF ALABAMA No.14192 PROFESSIONAL ENGINEER RANDALL D. WHORTON
11-05-2024

DUCT DIMENSIONS ARE LARGEST POSSIBLE DUCT TO FIT THROUGH CURB. CONSULT SYSTEM DESIGN ENGINEER FOR RECOMMENDED DUCT SIZE.

OVERALL HEIGHT MAY BE GREATER DEPENDING ON MOTOR, ADAPTER, AND/OR HINGE BASE. SEE KITCHEN FAN SCHEDULE AND PLANS FOR ADDITIONAL INFORMATION ON KITCHEN EXHAUST FAN (KEF–R1A).

DUCT TYPE	SIZE
STANDARD DUCT	18" SQ
FIRE–WRAPPED DUCT	10" SQ

KITCHEN EXHAUST FAN GREENHECK MODEL: USGF-180-15

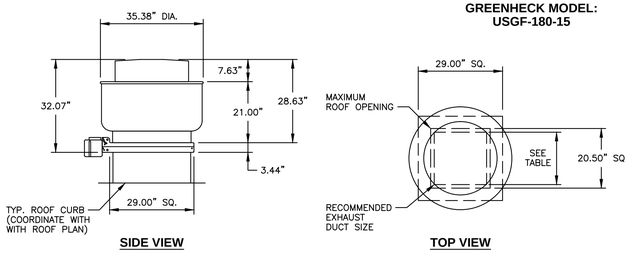

KITCHEN EXHAUST FAN DETAIL (KEF-R1A)

NOT TO SCALE

DUCT DIMENSIONS ARE LARGEST POSSIBLE DUCT TO FIT THROUGH CURB. CONSULT SYSTEM DESIGN ENGINEER FOR RECOMMENDED DUCT SIZE.

OVERALL HEIGHT MAY BE GREATER DEPENDING ON MOTOR, ADAPTER, AND/OR HINGE BASE. SEE KITCHEN FAN SCHEDULE AND PLANS FOR ADDITIONAL INFORMATION ON KITCHEN EXHAUST FAN (KEF–R1B).

DUCT TYPE	SIZE
STANDARD DUCT	18" SQ
FIRE–WRAPPED DUCT	10" SQ

KITCHEN EXHAUST FAN GREENHECK MODEL: USGF-180-15

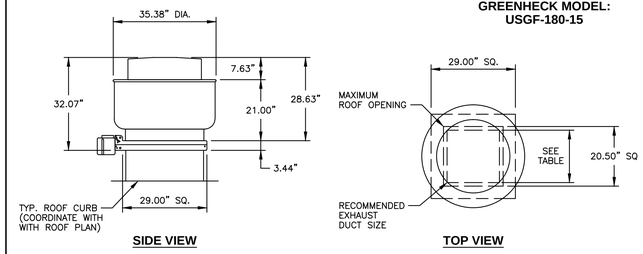

KITCHEN EXHAUST FAN DETAIL (KEF-R1B)

NOT TO SCALE

DUCT DIMENSIONS ARE LARGEST POSSIBLE DUCT TO FIT THROUGH CURB. CONSULT SYSTEM DESIGN ENGINEER FOR RECOMMENDED DUCT SIZE.

OVERALL HEIGHT MAY BE GREATER DEPENDING ON MOTOR, ADAPTER, AND/OR HINGE BASE. SEE KITCHEN FAN SCHEDULE AND PLANS FOR ADDITIONAL INFORMATION ON KITCHEN EXHAUST FAN (KEF–R2).

DUCT TYPE	SIZE
STANDARD DUCT	16" SQ
FIRE–WRAPPED DUCT	8" SQ

KITCHEN EXHAUST FAN GREENHECK MODEL: USGF-140HP-4

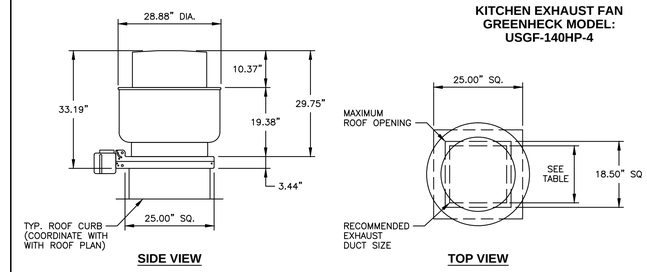

KITCHEN EXHAUST FAN DETAIL (KEF-R2)

NOT TO SCALE

ROOF OPENING REQUIREMENTS FOR TEMPERED MAKE-UP AIR UNIT (KSF-R1A / KSF-R1B)

MINIMUM ROOF OPENING: THE MINIMUM ROOF OPENING SIZE IS THE ILLUSTRATED DUCT DIAMETER PLUS 0.25 IN. ON ALL SIDES. FOR EXAMPLE: IF THE DUCT SIZE IS 14x14 IN. SQUARE, THE MINIMUM ROOF OPENING SIZE IS 14.5x14.5 IN. SQUARE.

MAXIMUM ROOF OPENING: THERE MUST BE A MINIMUM PERIMETER OF 1.75 IN. BETWEEN THE ROOF OPENING AND THE ROOF CURB. FOR EXAMPLE: IF THE ROOF CURB IS 75x30 IN. SQUARE, THE MAX. ROOF OPENING IS 71.5x26.5 IN. SQUARE.

NOTE: THE WEATHERHOOD AND FILTER SECTIONS OF THE MAKE–UP AIR UNIT ARE NOT SUPPORTED BY THE CURB. THIS IS BY DESIGN, IN ORDER TO HELP ALLEVIATE WATER INFILTRATION ISSUES (SEE FOOTPRINT VIEW FOR ADDITIONAL INFORMATION).

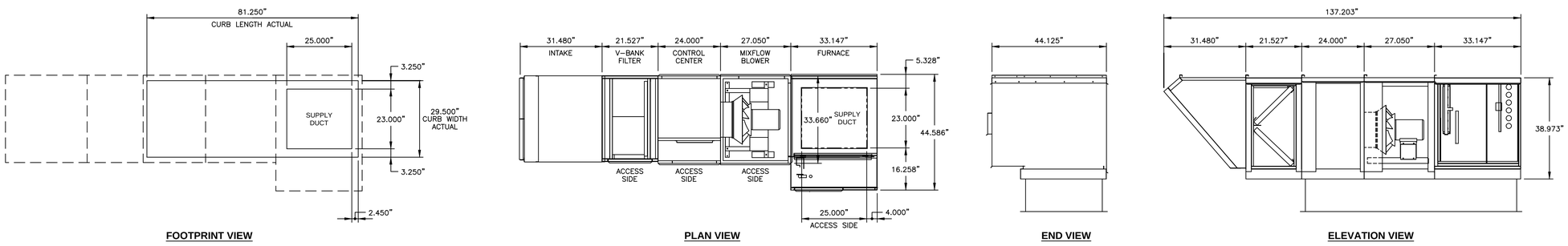

TEMPERED MAKE-UP AIR UNIT DETAILS FOR KSF-R1A / KSF-R1B

NOT TO SCALE

SEE KITCHEN FAN SCHEDULE ON SHEET RM1.6 AND PLANS FOR ADDITIONAL INFORMATION ON KITCHEN SUPPLY FAN (KSF–R2).

KITCHEN SUPPLY FAN GREENHECK MODEL: KSQ-7-M1-VG

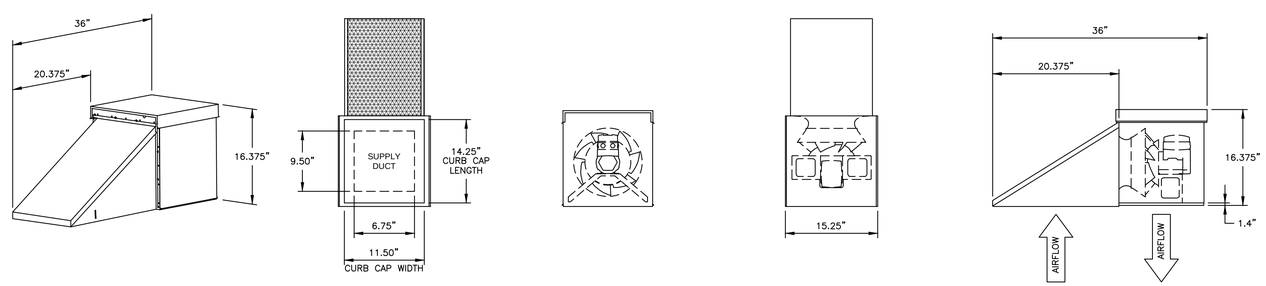

KITCHEN SUPPLY FAN DETAILS FOR KSF-R2

NOT TO SCALE

READINESS CENTER HVAC DETAILS

WHORTON ENGINEERING, INC.

HVAC – PLUMBING – PROCESS CONTROL

RANDALL WHORTON, P.E.
PHONE: (256) 820–9897

25 SUMMERALL GATE ROAD
ANNISTON, ALABAMA 36205

WHORTON ENGINEERING PROJECT NO. 22164

SS&L ARCHITECTS
Montgomery | Dothan | Auburn | Huntsville | Pensacola
WWW.SSLARCH.COM | 256.285.1063

Rev.	Description	Date

Job Number: 21112

AL ARNG IFB #: AC-25-B-0006-S

Date: NOVEMBER 1, 2024

Drawn By: JH

Checked By: RDW

Project Title

HUNTSVILLE READINESS CENTER
5180 MOORE'S MILL ROAD
HUNTSVILLE AL, 35811

Sheet Title: READINESS CENTER HVAC DETAILS

Sheet Number: RM2.6

STATE OF ALABAMA
RANDALL D. WHORTON
No.14192
PROFESSIONAL ENGINEER
11–05–2024

HUNTSVILLE READINESS CENTER
HVAC CONTROLS - UNIT WIRING DIAGRAM FOR TEMPERED MAKE-UP AIR UNIT (KSF-R1A / KSF-R1B)

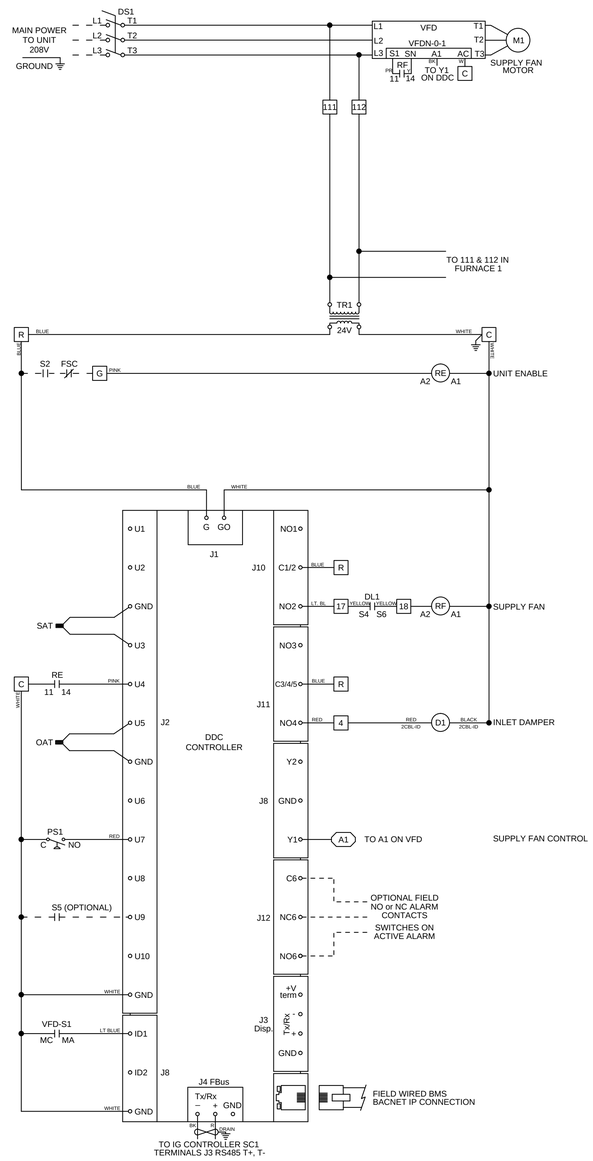

TYPICAL UNIT WIRING DIAGRAM FOR KITCHEN SUPPLY FAN (KSF-R1A / KSF-R1B)

NOT TO SCALE

GREENHECK
Building Value in Air.

Wiring Diagram Code:

GR11N49BS020NE1NQ14

CAUTION

UNIT SHALL BE GROUNDED IN ACCORDANCE WITH N.E.C.
POWER MUST BE OFF WHILE SERVICING.

NOTES

USE COPPER CONDUCTORS ONLY
60AC FOR TERMINALS RATED LESS THAN 100 AMPS.
75AC FOR TERMINALS RATED 100 AMPS OR MORE.

FIELD CONTROL WIRING RESISTANCE SHOULD NOT EXCEED 0.75 OHM.

FIELD WIRED – – – – –
FACTORY SUPPLIED AND WIRED ————

WIRE COLOR CODE

BK	BLACK	BL	BLUE	BR	BROWN
GY	GRAY	LT BL	LIGHT BLUE	O	ORANGE
PK	PINK	PR	PURPLE	R	RED
W	WHITE	Y	YELLOW		

LEGEND

D1	INLET DAMPER
D1L	INLET DAMPER LIMIT
DS1	MAIN DISCONNECT SWITCH
FSC	FIRE SYSTEM CONTACT
FU#	FUSE
M#	MOTOR
OAT	OUTDOOR AIR TEMP
OL#	MOTOR OVERLOAD
PS1	DIRTY FILTER SWITCH
PS9	AIRFLOW PROVING SWITCH
RE	UNIT ENABLE RELAY
RF	SUPPLY FAN RELAY
RH	HEAT RELAY
S2	FAN SWITCH
S5	OCCUPIED / UNOCCUPIED SWITCH (OPTIONAL - REF. IOM) CLOSED = UNOCCUPIED - OPEN = OCCUPIED
SAT	SUPPLY AIR TEMP
ST#	MOTOR STARTER
TR#	TRANSFORMER
VFD	VARIABLE FREQUENCY DRIVE

USER INTERFACE CONNECTIONS:

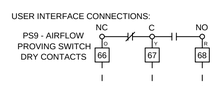

Wiring Template: Q14 DOC NUMBER: REV:

HUNTSVILLE READINESS CENTER
HVAC CONTROLS - INDIRECT GAS WIRING DIAGRAM FOR TEMPERED MAKE-UP AIR UNIT (KSF-R1A / KSF-R1B)

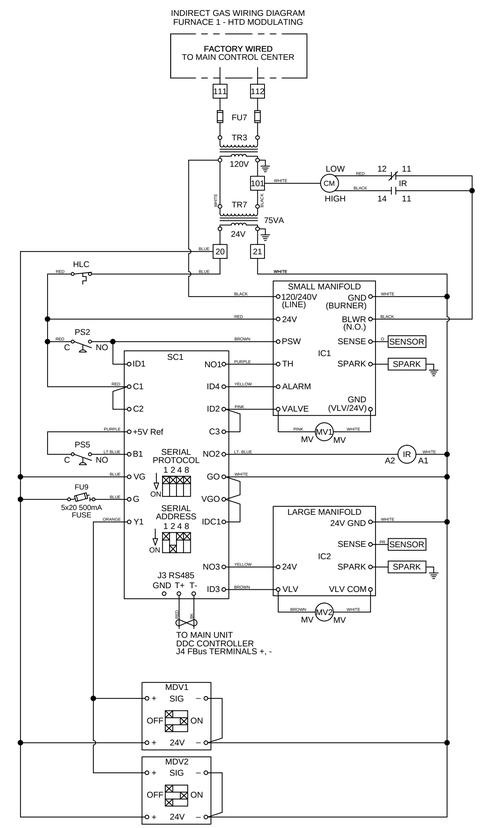

TYP. INDIRECT GAS WIRING DIAGRAM FOR KITCHEN SUPPLY FAN (KSF-R1A / KSF-R1B)

NOT TO SCALE

GREENHECK
Building Value in Air.

Wiring Diagram Code:

G4N51X1MX1000GS22

CAUTION

UNIT SHALL BE GROUNDED IN ACCORDANCE WITH N.E.C.
POWER MUST BE OFF WHILE SERVICING.

NOTES

USE COPPER CONDUCTORS ONLY
60AC FOR TERMINALS RATED LESS THAN 100 AMPS.
75AC FOR TERMINALS RATED 100 AMPS OR MORE.

FIELD CONTROL WIRING RESISTANCE SHOULD NOT EXCEED 0.75 OHM.

FIELD WIRED – – – – –
FACTORY SUPPLIED AND WIRED ————

NOTE:1
MODBUS COMMUNICATION WIRING.
DAISY CHAIN TO ALL MODBUS DEVICES.

WIRE COLOR CODE

BK	BLACK	BL	BLUE	BR	BROWN
GY	GRAY	LT BL	LIGHT BLUE	O	ORANGE
PK	PINK	PR	PURPLE	R	RED
W	WHITE	Y	YELLOW		

LEGEND

CM	COMBUSTION BLOWER MOTOR
FU#	FUSE(S)
HLC	HIGH TEMPERATURE LIMIT CONTROL
IC1	IGNITION CONTROL - SMALL MANIFOLD
IC2	IGNITION CONTROL - LARGE MANIFOLD
IR	INDUCTION RELAY
MDV1	MODULATING VALVE - SMALL MANIFOLD
MDV2	MODULATING VALVE - LARGE MANIFOLD
MV1	MAIN GAS VALVE - SMALL MANIFOLD
MV2	MAIN GAS VALVE - LARGE MANIFOLD
PS2	COMBUSTION AIR PROVING SWITCH
PS5	HIGH SPEED PRESSURE SWITCH
SC1	STAGE CONTROLLER
TR#	TRANSFORMER(S)

Wiring Template: S22 DOC NUMBER: REV:

READINESS CENTER
HVAC DETAILS

WHORTON ENGINEERING, INC.
HVAC – PLUMBING – PROCESS CONTROL
RANDALL WHORTON, P.E.
PHONE: (256) 820-9897
25 SUMMERALL GATE ROAD
ANNISTON, ALABAMA 36205
WHORTON ENGINEERING PROJECT NO. 22164

SS&L ARCHITECTS
Montgomery | Dothan | Auburn | Huntsville | Pensacola
WWW.SSLARCH.COM | 256.285.1063

Rev.	Description	Date

Job Number: 21112
AL ARNG IFB #: AC-25-B-0006-S
Date: NOVEMBER 1, 2024
Drawn By: JH
Checked By: RDW
Project Title:

HUNTSVILLE READINESS CENTER
5180 MOORE'S MILL ROAD
HUNTSVILLE AL, 35811

Sheet Title: READINESS CENTER HVAC DETAILS

Sheet Number: RM2.7

11-05-2024

OPTIONAL FACTORY PROVIDED CONTROLS

ITEM	DESCRIPTION
ACC	AFTER–COOLING COIL TEMPERATURE SENSOR
D2	SUPPLY DAMPER ACTUATOR
OAD	OUTDOOR AIR DISCHARGE TEMPERATURE SENSOR
OAI	OUTDOOR AIR INTAKE TEMPERATURE SENSOR
PS2	OUTDOOR AIR FILTERS PRESSURE TRANSDUCER (DIRTY FILTER SENSOR)
PS3	EXHAUST AIR FILTERS PRESSURE TRANSDUCER (DIRTY FILTER SENSOR)
S2	ENERGY WHEEL ROTATION SENSOR
VFD–E	EXHAUST MOTOR VFD – MODULATING/MULTISPEED/CONSTANT
VFD–S	SUPPLY MOTOR VFD – MODULATING/MULTISPEED/CONSTANT
DDC	MICROPROCESSOR CONTROLLER
BMS INTERFACE	LONWORKS, BACNET MS/TP, BACNET IP, MODBUS RTU
RD	UNOCCUPIED RECIRC DAMPER
SUP–SENSOR	MODULATING HOT GAS REHEAT TEMPERATURE SENSOR

STANDARD FACTORY PROVIDED CONTROLS

DESCRIPTION
UNIT MOUNTED CONTROL CENTER
DOOR INTERLOCKING DISCONNECT SWITCH
CONTROL CIRCUIT FUSING
CONTROL TRANSFORMER FOR 24 VAC CONTROL
TERMINAL STRIP FOR FIELD WIRING
HEATING/COOLING INTEGRAL CONTROLS

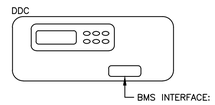

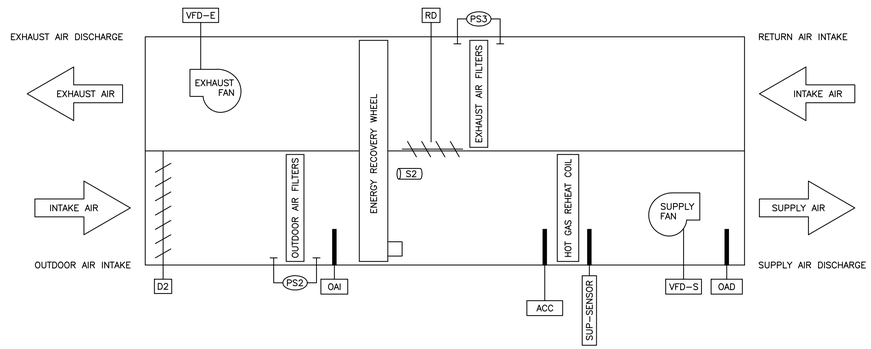

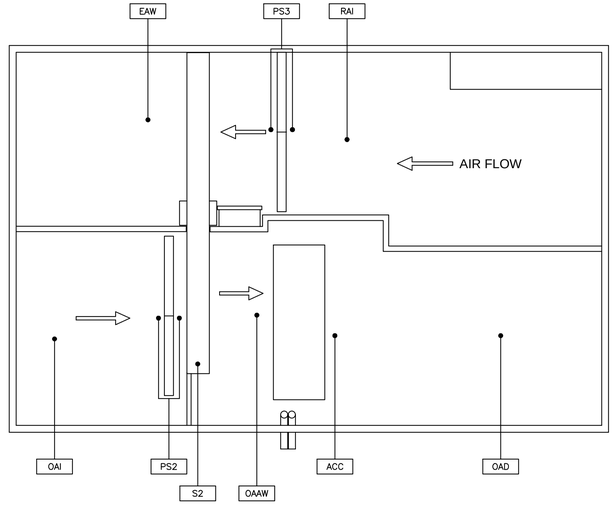

FACTORY PROVIDED CONTROLS DETAILS (OSA-R1 / OSA-R2)

NOT TO SCALE

ALL INDOOR AND OUTDOOR UNITS SHALL BE LOCATED SO THAT MAINTENANCE CLEARANCES IN ACCORDANCE WITH MANUFACTURER'S RECOMMENDATION AND AS PER PLANS/SPECIFICATIONS ARE MAINTAINED. COORDINATE MAINTENANCE CLEARANCES WITH STRUCTURAL AND ARCHITECTURAL PLANS, FRAMING, ETC.

NOTE: ALL DIMENSIONS ARE IN INCHES

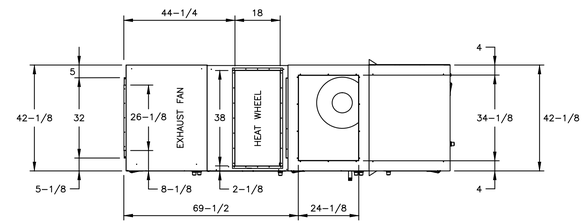

PLAN VIEW

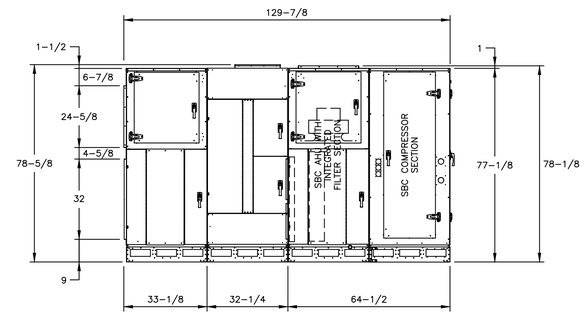

ELEVATION VIEW

TOTAL ENERGY RECOVERY UNIT DETAILS

NOT TO SCALE

(OSA-R1 / OSA-R2)

COORDINATE WITH DDC CONTROLS CONTRACTOR FOR COMPLETE INTERFACE TO THE BUILDING AUTOMATION SYSTEM.

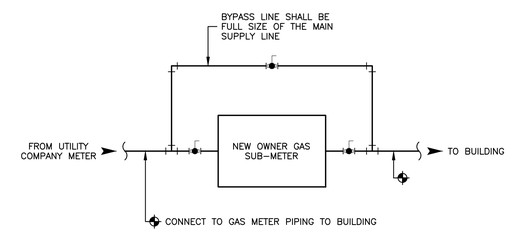

TYPICAL GAS SUB-METER PIPING DIAGRAM

NOT TO SCALE

READINESS CENTER HVAC DETAILS

WHORTON ENGINEERING, INC.
HVAC – PLUMBING – PROCESS CONTROL
RANDALL WHORTON, P.E.
PHONE: (256) 820–9897
25 SUMMERALL GATE ROAD
ANNISTON, ALABAMA 36205

WHORTON ENGINEERING PROJECT NO. 22164

SS&L ARCHITECTS
Montgomery | Dothan | Auburn | Huntsville | Pensacola
WWW.SSLARCH.COM | 256.285.1063

Rev.	Description	Date

Job Number: 21112
AL ARNG IFB #: AC-25-B-0006-S
Date: NOVEMBER 1, 2024
Drawn By: JH
Checked By: RDW

Project Title:
HUNTSVILLE READINESS CENTER
5180 MOORE'S MILL ROAD
HUNTSVILLE AL, 35811

Sheet Title:
READINESS CENTER HVAC DETAILS

Sheet Number:
RM2.8

11–05–2024

HUNTSVILLE READINESS CENTER FOR KH-R1 KITCHEN FAN CONTROL CENTER (KFCC-R1) ELECTRICAL FIELD WIRING SCHEMATIC

GREENHECK
BUILDING VALUE IN AIR.

PANEL MARK	KFCC–R1
LOCATION	LEFT CABINET ON KH–R1

POWER WIRING FOR KFCC CONTROL SYSTEM

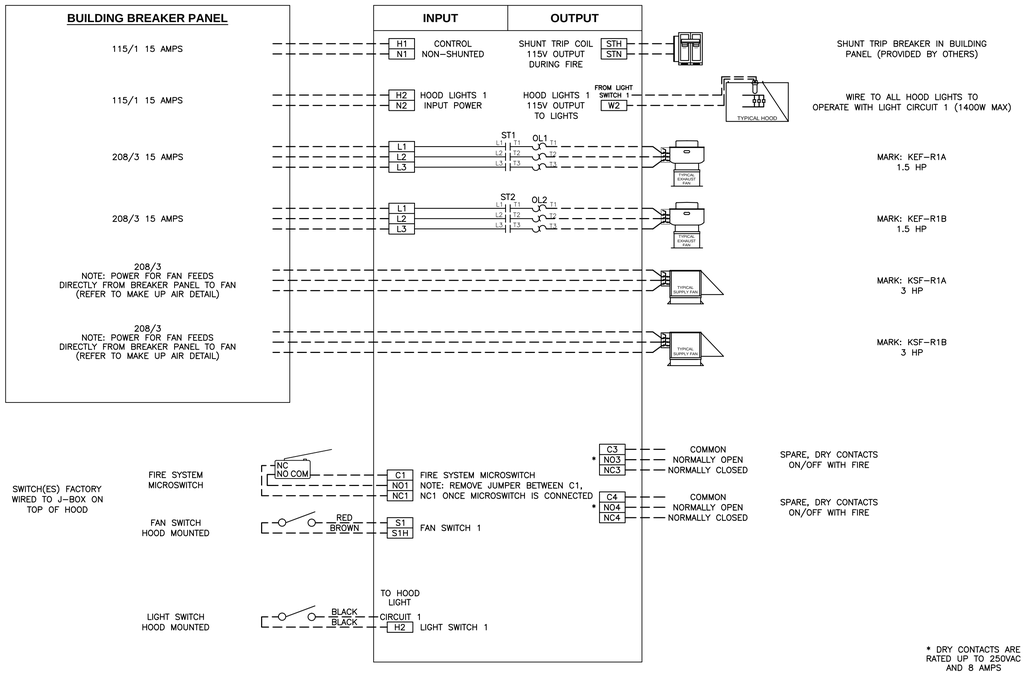

CONTROL WIRING FOR KFCC CONTROL SYSTEM

	SENSOR	
HOOD MARK	QTY	LOCATION
KH–R1 SECTION 1	1	CAPTURE TANK
KH–R1 SECTION 2	1	CAPTURE TANK

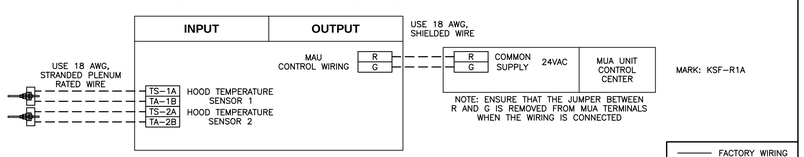

POSSIBLE SENSOR LOCATIONS:

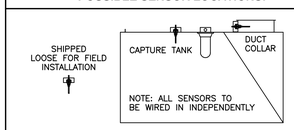

NOTES:

1. ALL WIRING TO BE DONE BY CERTIFIED AND QUALIFIED PERSONS AND MUST BE WIRED TO ALL LOCAL AND NATIONAL CODES.
2. EXHAUST AND SUPPLY FAN(S) SHOWN AS TYPICAL FOR REPRESENTATION OF THE FAN. FOR EXHAUST OR SUPPLY FAN DETAIL SEE FAN SUBMITTALS.
3. EXHAUST AND/OR SUPPLY FANS MAY BE SHOWN MORE THAN ONCE FOR PURPOSE OF SEPARATING POWER VERSUS CONTROL WIRING.
4. POWER WIRING IS THE RESPONSIBILITY OF THE ELECTRICIAN. CONTROL WIRING IS THE RESPONSIBILITY OF CONTROLS CONTRACTOR. IF THERE IS NO CONTROLS CONTRACTOR, BOTH POWER AND CONTROL WIRING IS THE RESPONSIBILITY OF THE ELECTRICIAN.
5. ALL GROUND WIRING NOT SHOWN ON ABOVE DIAGRAM FOR CLARITY.
6. FOR FURTHER INSTRUCTIONS PLEASE SEE THE KFCC INSTALLATION AND OPERATIONS MANUAL THAT WAS SHIPPED WITH PANEL, OR CONTACT GREENHECK'S KITCHEN VENTILATION TEAM AT 1–800–371–6858.

HUNTSVILLE READINESS CENTER FOR KH-R1 KITCHEN FAN CONTROL CENTER (KFCC-R1) ELECTRICAL PREWIRE PACKAGE

GREENHECK
BUILDING VALUE IN AIR.

PANEL MARK: KFCC–R1	SERIAL NUMBER: WDSN#
HOOD MARK(S): KH–R1	MODEL: KFCC

MOTOR	FAN MARK	HP	VOLT	PH	FLA	WIRE	BREAKER
F1–E	KEF–R1A	1.5	208	3	6.6	14 GA	15 AMP
F2–E	KEF–R1B	1.5	208	3	6.6	14 GA	15 AMP
F3–S	KSF–R1A	3	208	3	10.6	14 GA	15 AMP
F4–S	KSF–R1B	3	208	3	10.6	14 GA	15 AMP

- [1] QTY. FAN SWITCHES (0–3)
- [1] QTY. LIGHT SWITCHES (0–3)
- [0] QTY. TEMP. SWITCHES (0–1)
- [ ] ONE SWITCH FOR L & F
- [X] DIGITAL TEMPERATURE INTERLOCK
- [2] MOUNTED SENSORS – FACTORY
- [0] MOUNTED SENSORS – FIELD
- [ ] HEAT SWITCH / COOL SWITCH > TEMPERING SW
- [ ] AD SWITCH
- [X] HOOD SWITCHES
- [ ] AUDIBLE ALARM
- [ ] GAS RESET [ ] GAS OFF WITH FANS
- [ ] POWER FOR GAS SOLENOID
- [X] POWER FOR SHUNT TRIP
- [X] EXHAUST IN FIRE
- [X] MUA INTERFACE
- [ ] LIGHTS OUT IN FIRE
- [X] FIRE RELAY (#1)
- [ ] EXTRA FIRE RELAY (#2)
- [ ] EXTRA FIRE RELAY (#3)
- [ ] DPDT RELAY WITH SF
- [ ] DPDT RELAY WITH EF
- [ ] OFF DELAY RELAY
- [ ] SF FAILURE LIGHT
- [ ] EF FAILURE LIGHT
- [ ] FAN FAILURE LIGHT (APPL.)
- [ ] AUX. SUPPLY CONTACT
- [ ] SDR

SPARE FIRE SWITCH CONTACT
(TERMINATION POINT FOR SECOND FIRE SWITCH)

ANSUL / AMEREX
RD/RD
BR/BK
BK/YW

SPARE RELAY CONTACTS (ACTIVATED BY FS1)
(CAN BE USED FOR SHUNT TRIP, ALARMS, ETC.)

A < OPEN WITH POWER AT H1/N1 & FIRE SYSTEM ARMED
CLOSED ON FIRE OR NO POWER

B < CLOSED WITH POWER AT H1/N1 & FIRE SYSTEM ARMED
OPEN ON FIRE OR NO POWER

TORQUE:	FIELD WIRING:
TERMINAL BLOCKS = 8 LB.IN	USE MINIMUM
GROUNDING BLOCKS = 8 LB.IN	60° COPPER WIRE

LABEL	DESCRIPTION
EF	EXHAUST FAN
SF	SUPPLY FAN
ST	STARTER
OL	OVERLOAD
C	CONTACTOR
G	GROUND
S	SWITCH
LT	LIGHT
FS	FIRE SWITCH
R1	115VAC 3PDT FIRE RELAY
R2–8,12	115VAC DPDT RELAY
R9	115VAC TIME DELAY RELAY
R10,11,13	115VAC SPDT RELAY
AF	AIR FLOW SWITCH
SV	GAS SOLENOID
STB	SHUNT TRIP BREAKER
D	DAMPER
PB	PUSHBUTTON
EC	EVAP COOLER
TS	TEMPERATURE SENSOR
TC	TEMPERATURE CONTROLLER

——— FACTORY WIRING
– – – FIELD WIRING

ALL WIRING 90°C 14 GA.
UNLESS SPECIFIED

WIRE COLOR

- BK – BLACK
- BL – BLUE
- BR – BROWN
- OR – ORANGE
- PR – PURPLE
- RD – RED
- YW – YELLOW
- WH – WHITE

NOTES:

DRAWING SHOWN DE–ENERGIZED AT L1 (TERM. #H1), WITH FIRE SYSTEM ARMED (NON–FIRE MODE). (NORMAL OPERATION, R1 & R2 ARE ENERGIZED) IF WALL MOUNTED PREWIRE, OR FIELD INSTALLED FIRE SYSTEM, THE FIRE SYSTEM MICROSWITCHES MUST BE FIELD WIRED.

C UL US LISTED 43BM
COMMERCIAL APPLIANCE OUTLET CENTER
ELECTRICAL RATINGS: 120V, 1 PHASE, 60HZ, 15A
BASE FILE #E200616, ML FILE #E313951

WIRING DIAGRAM CODE: WDC#

DOC NUMBER: | REV:

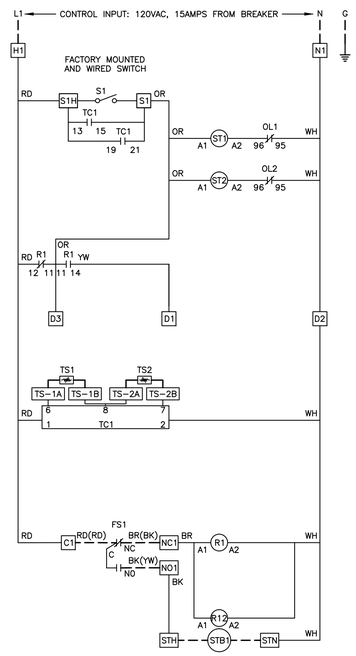

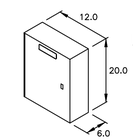

CONTROL PANEL INSTALLATION LOCATION:

LEFT CABINET ON MARK: KH–R1

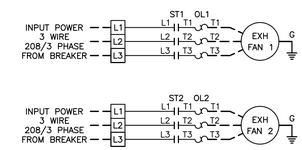

SWITCHES MOUNTING - FACE MOUNT LEFT SIDE OF HOOD

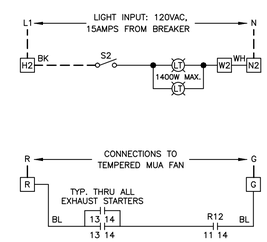

TEMPERATURE INTERLOCK CALIBRATION

1. PRESS THE SET BUTTON TO SEE THE FIRST SET POINT (PRESS THE SET BUTTON TWICE SLOWLY TO SEE THE SECOND SET POINT)
2. PRESS THE UP/DOWN ARROW BUTTON TO CHANGE THE SET POINT.
3. PRESS THE SET BUTTON TO VIEW THE CURRENT TEMPERATURE
4. CHECK SYSTEM OPERATION BEFORE MAKING ADDITIONAL ADJUSTMENTS.

READINESS CENTER HVAC DETAILS

WHORTON ENGINEERING, INC.
HVAC – PLUMBING – PROCESS CONTROL
RANDALL WHORTON, P.E.
PHONE: (256) 820–9897
25 SUMMERALL GATE ROAD
ANNISTON, ALABAMA 36205

WHORTON ENGINEERING PROJECT NO. 22164

SS&L ARCHITECTS
Montgomery | Dothan | Auburn | Huntsville | Pensacola
WWW.SSLARCH.COM | 256.285.1063

Rev.	Description	Date

Job Number: 21112
AL ARNG IFB #: AC-25-B-0006-S
Date: NOVEMBER 1, 2024
Drawn By: JH
Checked By: RDW
Project Title: HUNTSVILLE READINESS CENTER, 5180 MOORE'S MILL ROAD, HUNTSVILLE AL, 35811
Sheet Title: READINESS CENTER HVAC DETAILS
Sheet Number: RM2.9

ALABAMA LICENSED PROFESSIONAL ENGINEER No.14192 RANDALL D. WHORTON
11–05–2024

HUNTSVILLE READINESS CENTER FOR KH-R2 KITCHEN FAN CONTROL CENTER (KFCC-R2) ELECTRICAL FIELD WIRING SCHEMATIC

GREENHECK
BUILDING VALUE IN AIR.

PANEL MARK	KFCC–R2
LOCATION	LEFT CABINET ON KH–R2 HOOD

POWER WIRING FOR KFCC CONTROL SYSTEM

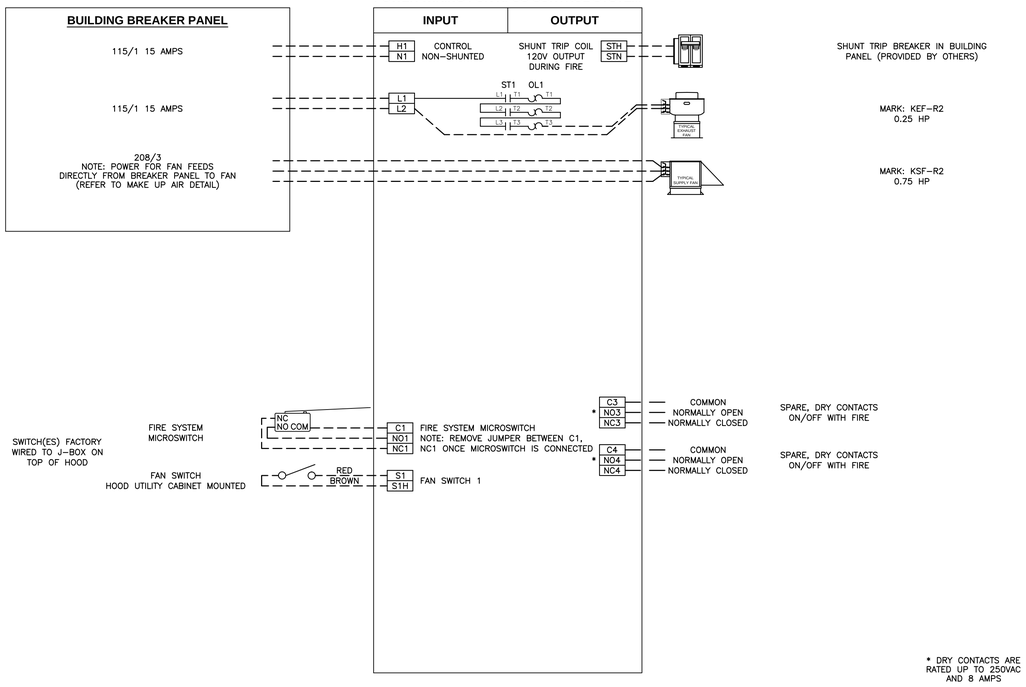

CONTROL WIRING FOR KFCC CONTROL SYSTEM

	SENSOR	
HOOD MARK	QTY	LOCATION
KH–R2 SECTION 1	1	CAPTURE TANK

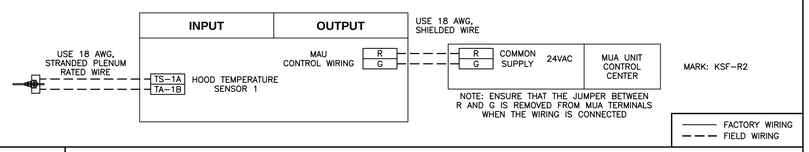

POSSIBLE SENSOR LOCATIONS:

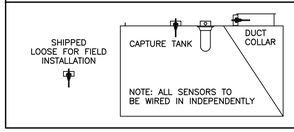

NOTES:

1. ALL WIRING TO BE DONE BY CERTIFIED AND QUALIFIED PERSONS AND MUST BE WIRED TO ALL LOCAL AND NATIONAL CODES.
2. EXHAUST AND SUPPLY FAN(S) SHOWN AS TYPICAL FOR REPRESENTATION OF THE FAN. FOR EXHAUST OR SUPPLY FAN DETAIL SEE FAN SUBMITTALS.
3. EXHAUST AND/OR SUPPLY FANS MAY BE SHOWN MORE THAN ONCE FOR PURPOSE OF SEPARATING POWER VERSUS CONTROL WIRING.
4. POWER WIRING IS THE RESPONSIBILITY OF THE ELECTRICIAN. CONTROL WIRING IS THE RESPONSIBILITY OF CONTROLS CONTRACTOR. IF THERE IS NO CONTROLS CONTRACTOR, BOTH POWER AND CONTROL WIRING IS THE RESPONSIBILITY OF THE ELECTRICIAN.
5. ALL GROUND WIRING NOT SHOWN ON ABOVE DIAGRAM FOR CLARITY.
6. FOR FURTHER INSTRUCTIONS PLEASE SEE THE KFCC INSTALLATION AND OPERATIONS MANUAL THAT WAS SHIPPED WITH PANEL, OR CONTACT GREENHECK'S KITCHEN VENTILATION TEAM AT 1–800–371–6858.

HUNTSVILLE READINESS CENTER FOR KH-R2 KITCHEN FAN CONTROL CENTER (KFCC-R2) ELECTRICAL PREWIRE PACKAGE

GREENHECK
BUILDING VALUE IN AIR.

PANEL MARK: KFCC–R2	SERIAL NUMBER: WDSN#
HOOD MARK(S): KH–R2	MODEL: KFCC

MOTOR	FAN MARK	HP	VOLT	PH	FLA	WIRE	BREAKER
F1–E	KEF–R2	0.25	115	1	5.8	14 GA	15 AMP
F2–S	KSF–R2	0.75	208	3	3.5	14 GA	15 AMP

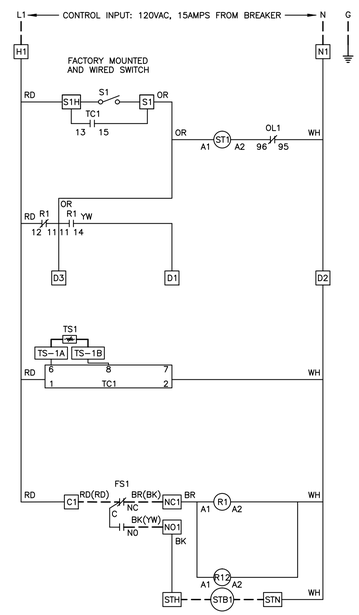

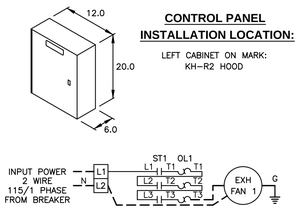

CONTROL PANEL INSTALLATION LOCATION:

LEFT CABINET ON MARK: KH–R2 HOOD

1	QTY. FAN SWITCHES (0–3)	X	EXHAUST IN FIRE
0	QTY. LIGHT SWITCHES (0–3)	X	MUA INTERFACE
	QTY. TEMP. SWITCHES (0–1)		LIGHTS OUT IN FIRE
	ONE SWITCH FOR L & F	X	FIRE RELAY (#1)
X	DIGITAL TEMPERATURE INTERLOCK		EXTRA FIRE RELAY (#2)
1	MOUNTED SENSORS – FACTORY		EXTRA FIRE RELAY (#3)
0	MOUNTED SENSORS – FIELD		DPDT RELAY WITH SF
	HEAT SWITCH } TEMPERING SW		DPDT RELAY WITH EF
	COOL SWITCH } TEMPERING SW		OFF DELAY RELAY
	AD SWITCH		SF FAILURE LIGHT
X	HOOD SWITCHES		EF FAILURE LIGHT
	AUDIBLE ALARM		FAN FAILURE LIGHT (APPL.)
	GAS RESET [ ] GAS OFF WITH FANS		AUX. SUPPLY CONTACT
	POWER FOR GAS SOLENOID		SDR
X	POWER FOR SHUNT TRIP		

SPARE FIRE SWITCH CONTACT
(TERMINATION POINT FOR SECOND FIRE SWITCH)

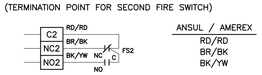

ANSUL / AMEREX
RD/RD
BR/BK
BK/YW

SPARE RELAY CONTACTS (ACTIVATED BY FS1)
(CAN BE USED FOR SHUNT TRIP, ALARMS, ETC.)

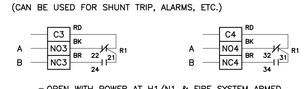

A — OPEN WITH POWER AT H1/N1 & FIRE SYSTEM ARMED
CLOSED ON FIRE OR NO POWER

B — CLOSED WITH POWER AT H1/N1 & FIRE SYSTEM ARMED
OPEN ON FIRE OR NO POWER

TORQUE:	FIELD WIRING:
TERMINAL BLOCKS = 8 LB.IN GROUNDING BLOCKS = 8 LB.IN	USE MINIMUM 60° COPPER WIRE

LABEL	DESCRIPTION
EF	EXHAUST FAN
SF	SUPPLY FAN
ST	STARTER
OL	OVERLOAD
C	CONTACTOR
G	GROUND
S	SWITCH
LT	LIGHT
FS	FIRE SWITCH
R1	115VAC 3PDT FIRE RELAY
R2–8,12	115VAC DPDT RELAY
R9	115VAC TIME DELAY RELAY
R10,11,13	115VAC SPDT RELAY
AF	AIR FLOW SWITCH
SV	GAS SOLENOID
STB	SHUNT TRIP BREAKER
D	DAMPER
PB	PUSHBUTTON
EC	EVAP COOLER
TS	TEMPERATURE SENSOR
TC	TEMPERATURE CONTROLLER

——— FACTORY WIRING
– – – FIELD WIRING

ALL WIRING 90°C 14 GA.
UNLESS SPECIFIED

WIRE COLOR

BK – BLACK
BL – BLUE
BR – BROWN
OR – ORANGE
PR – PURPLE
RD – RED
YW – YELLOW
WH – WHITE

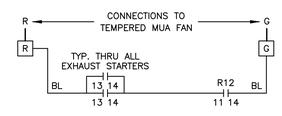

NOTES:

DRAWING SHOWN DE–ENERGIZED AT L1 (TERM. #H1), WITH FIRE SYSTEM ARMED (NON–FIRE MODE). (NORMAL OPERATION, R1 & R2 ARE ENERGIZED) IF WALL MOUNTED PREWIRE, OR FIELD INSTALLED FIRE SYSTEM, THE FIRE SYSTEM MICROSWITCHES MUST BE FIELD WIRED.

c UL us LISTED 43BM

COMMERCIAL APPLIANCE OUTLET CENTER
ELECTRICAL RATINGS: 120V, 1 PHASE, 60HZ, 15A
BASE FILE #E200616, ML FILE #E313951

WIRING DIAGRAM CODE: WDC#

DOC NUMBER: | REV:

TEMPERATURE INTERLOCK CALIBRATION

1. PRESS THE SET BUTTON TO SEE THE FIRST SET POINT (PRESS THE SET BUTTON TWICE SLOWLY TO SEE THE SECOND SET POINT)
2. PRESS THE UP/DOWN ARROW BUTTON TO CHANGE THE SET POINT.
3. PRESS THE SET BUTTON TO VIEW THE CURRENT TEMPERATURE
4. CHECK SYSTEM OPERATION BEFORE MAKING ADDITIONAL ADJUSTMENTS.

READINESS CENTER HVAC DETAILS

WHORTON ENGINEERING, INC.
HVAC – PLUMBING – PROCESS CONTROL
RANDALL WHORTON, P.E.
PHONE: (256) 820–9897
25 SUMMERALL GATE ROAD
ANNISTON, ALABAMA 36205

WHORTON ENGINEERING PROJECT NO. 22164

SS&L ARCHITECTS
Montgomery | Dothan | Auburn | Huntsville | Pensacola
WWW.SSLARCH.COM | 256.285.1063

Rev.	Description	Date

Job Number: 21112
AL ARNG IFB #: AC-25-B-0006-S
Date: NOVEMBER 1, 2024
Drawn By: JH
Checked By: RDW
Project Title: HUNTSVILLE READINESS CENTER, 5180 MOORE'S MILL ROAD, HUNTSVILLE AL, 35811
Sheet Title: READINESS CENTER HVAC DETAILS
Sheet Number: RM2.10

STATE OF ALABAMA, LICENSED PROFESSIONAL ENGINEER, No.14192, RANDALL D. WHORTON
11–05–2024

OUTSIDE AIR EQUIPMENT CONTROL SYSTEM POINT LIST

SYSTEM POINT DESCRIPTION		ANALOG															BINARY											SYSTEMS FEATURES																												NOTES
		INPUT												OUTPUT			INPUT								OUTPUT					ALARMS														PROGRAMS											
OSA UNIT (CONSTANT VOLUME)	GRAPHIC	TEMPERATURE	PRESSURE	RH	KW	KWH	BTU HR	GPM	PERCENT	CFM	SETPOINT			DDC (4-20MA, 0-10VDC)		SETPOINT ADJ.		PNEU. TRANSDUCER	STATUS ON/OFF	FILTER STATUS	STATUS OPEN/CLOSED	STATUS	NO. OF STARTS	TIMED OVERRIDE		OFF/ON	OPEN/CLOSE	LOCK OUT	ENABLE/DISABLE		HIGH ANALOG	LOW ANALOG	HIGH BINARY	LOW BINARY	PROOF	SENSOR FAIL	FLOW FAIL	COMM. FAIL	DIAGNOSTICS			TIME SCHEDULING	OPTIMAL START/STOP	DEMAND LIMITING	RESET	EVENT PROGRAM	DDC	ALARM INSTRUCT	MAINT. WK. ORD.	RUN TIME	EXP. MESSAGE	SET BACK/SET UP			
CONTROL PANEL	X																																				X				X	X				X	X		X		X					UNIT MOUNTED
SUPPLY FAN	X																		X							X										X																				STATUS INDICATION
SUPPLY AIR	X	X														X														X	X				X																				
COOLING COIL	X													X					X							X																													
OUTSIDE AIR	X	X		X																															X																				
SPACE	X	X		X							X					X														X	X																								
FILTER STATUS	X																			X													X																							
CONDENSATE DRAIN	X																		X														X																						
SMOKE DETECTORS	X																		X							X							X																						SEE NOTE 1

GENERAL NOTES:

1. SMOKE DETECTORS ONLY REQUIRED WHERE SHOWN ON PLANS. COORDINATE WITH ELECTRICAL PLANS.

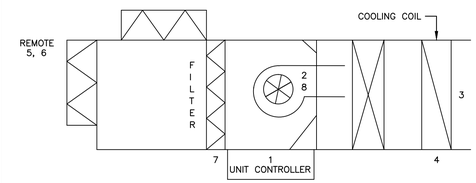

	AI	AO	BI	BO
1. CONTROL PANEL COMMUNICATIONS			X	
2. SUPPLY FAN STATUS INDICATION			X	
3. SUPPLY TEMPERATURE	X			
4. COOLING COIL			X	X
5. OUTSIDE AIR TEMPERATURE	X			
6. SPACE TEMPERATURE	X			
7. FILTER STATUS			X	
8. SUPPLY FAN START/STOP				X

OUTSIDE AIR EQUIPMENT CONTROLS DIAGRAM

NOT TO SCALE

WATER TO AIR - WATER SOURCE HEAT PUMP CONTROL SYSTEM POINT LIST

SYSTEM POINT DESCRIPTION		ANALOG															BINARY											SYSTEMS FEATURES																												NOTES
		INPUT												OUTPUT			INPUT								OUTPUT					ALARMS														PROGRAMS											
GEOTHERMAL HEAT PUMP	GRAPHIC	TEMPERATURE	RH	SETPOINT	SETPOINT HT/CL	CFM								SETPOINT ADJ.	DAMPER CONTROL				STATUS HI/LOW	ENABLE/DISABLE	TIMED OVERRIDE	CANCEL	STATUS			OFF/ON	OPEN/CLOSE	ENABLE/DISABLE	GENERAL ALARM		HIGH ANALOG	LOW ANALOG	BINARY	LATCH DIAGNOSTICS	SENSOR FAIL	COMM. FAIL	DIAGNOSTICS	HIGH CONDENSATE			TIME SCHEDULING	OPTIMAL START/STOP	DEMAND LIMITING	RESET	EVENT PROGRAM	ALARM INSTRUCT	MAINT. WK. ORD.	RUN TIME	EXP. MESSAGE	SET BACK/SET UP	NIGHT PURGE	MORNING WU/CD	RAND. START/STOP		
CONTROL PANEL	X																					X					X							X	X				X	X	X			X					X	X					
COMPRESSOR	X																		X						X							X			X											X					X			
SUPPLY FAN	X																	X							X							X														X								
WATER PUMP/VALVE	X																								X																													
REVERSING VALVE	X																								X																													
ZONE SENSOR	X	X		X	X															X	X									X	X		X		X														X					
DISCHARGE AIR	X	X																												X	X	X	X																				
LEAVING WATER	X	X																												X	X	X	X																				
EWT/RETURN AIR	X	X																												X	X	X	X																				
MIXED AIR TEMP. RETURN AIR TEMP.	X	X																												X	X	X	X																				
DIRTY FILTER	X																					X																																
CONDENSATE OVERFLOW	X																	X														X										X			X								
OUTSIDE AIR TEMP.	X	X																												X	X			X		X																	
CONDENSATE MOISTURE SENSOR	X																	X												X				X	X	X																	
DRAIN PAN SENSOR	X																	X												X				X	X	X																	

GENERAL NOTES:

1. SOME WATER SOURCE HEAT PUMPS FRESH AIR MOTORIZED DAMPERS SHALL BE CONTROLLED BY A CO2 DETECTOR TO MODULATE OUTSIDE AIR. REFERENCE PLANS FOR LOCATIONS.

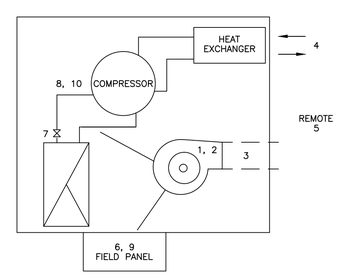

	AI	AO	BI	BO
1. SUPPLY FAN START/STOP				X
2. SUPPLY FAN STATUS			X	
3. SUPPLY AIR TEMPERATURE	X			
4. LEAVING WATER TEMPERATURE	X			
5. ZONE TEMPERATURE	X			
6. ZONE SETPOINT		X		
7. REVERSING VALVE				X
8. COMPRESSOR 1 STATUS			X	
9. COMMUNICATION STATUS			X	
10. COMPRESSOR 1 START/STOP				X

WATER TO AIR WATER SOURCE HEAT PUMP CONTROLS

NOT TO SCALE

READINESS CENTER HVAC DETAILS

WHORTON ENGINEERING, INC.

HVAC – PLUMBING – PROCESS CONTROL

RANDALL WHORTON, P.E.
PHONE: (256) 820-9897

25 SUMMERALL GATE ROAD
ANNISTON, ALABAMA 36205

WHORTON ENGINEERING PROJECT NO. 22164

SS&L ARCHITECTS
Montgomery | Dothan | Auburn | Huntsville | Pensacola
WWW.SSLARCH.COM | 256.285.1063

Rev.	Description	Date

Job Number
21112

AL ARNG IFB #
AC-25-B-0006-S

Date
NOVEMBER 1, 2024

Drawn By
JH

Checked By
RDW

Project Title

HUNTSVILLE READINESS CENTER
5180 MOORE'S MILL ROAD
HUNTSVILLE AL, 35811

Sheet Title
READINESS CENTER HVAC DETAILS

Sheet Number
RM2.11

STATE OF ALABAMA LICENSED RANDALL D. WHORTON No.14192 PROFESSIONAL ENGINEER
11-05-2024

READINESS CENTER
BUILDING AUTOMATION SYSTEM
INTER-TRADE RESPONSIBILITY MATRIX

FMS = FACILITY MANAGEMENT SYSTEM/BUILDING AUTOMATION SYSTEM CONTRACTOR
23 = DIVISION 23 CONTRACTOR (PLUMBING OR HVAC)
26 = DIVISION 26 CONTRACTOR (ELECTRICAL OR FIRE ALARM CONTRACTOR)

	WORK	FURNISH	INSTALL	LOW VOLTAGE WIRE AND CONDUIT	LINE POWER AND CONDUIT
1	DUCT SMOKE DETECTORS (SHOWN ON PLANS)	26	23	FMS	26
2	AUTOMATION DAMPERS	FMS	23	FMS	FMS
3	MANUAL VALVES, DAMPERS	23	23		
4	AUTOMATIC VALVES	FMS	23	FMS	FMS
5	PIPE INSERTION DEVICES AND TAPS INCLUDING THERMOWELLS FLOW AND PRESSURE STATIONS, ETC REQUIRING DDC INTERFACE.	FMS	23	FMS	FMS
6	PIPE INSERTION DEVICES AND TAPS INCLUDING THERMOWELLS FLOW AND PRESSURE STATIONS, ETC. NOT REQUIRING DDC INTERFACE.	23	23		
7	PUMP FLOW SWITCHES	23	23	FMS	
8	GEOTHERMAL HEAT PUMP CONTROLLERS	FMS	FMS	FMS	26
9	GEOTHERMAL HEAT PUMP WATER PUMP	23	23	FMS	FMS
10	THERMOSTATS AND HUMIDISTATS	FMS	FMS	FMS	
11	WATER TREATMENT SYSTEM	23	23	23	26
12	VARIABLE FREQUENCY DRIVES	FMS	23	FMS	26
13	FMS LOW VOLTAGE AND COMMUNICATION WIRING	FMS	FMS	FMS	
14	FMS CONDUITS AND RACEWAY	FMS	FMS	FMS	
15	CONTROL RELAYS	FMS	FMS	FMS	
16	FMS NETWORK ROUTERS, BRIDGES, HUBS AND ASSOCIATED CABLING	FMS	FMS	FMS	
17	FMS NODES, EQUIPMENT, HOUSINGS, ENCLOSURES AND PANELS AND POWER FROM DIV. 26 PANELS	FMS	FMS	FMS	FMS
18	THERMOSTAT/HUMIDISTAT/CO2 DETECTOR FOR CONTROL OF FRESH AIR MOTORIZED DAMPERS	FMS	23	FMS	FMS
19	FMS SOFTWARE, FIRMWARE AND PROJECT SPECIFIC SOFTWARE CONFIGURATIONS AND DATABASE ENTRIES	FMS	FMS	FMS	
20	OUTSIDE AIR UNIT CONTROLLERS	23	FMS	FMS	26
21	OUTSIDE AIR UNIT WATER PUMP	23	23	FMS	FMS
22	CEILING HEATER CONTROLLERS	23	23	26	26
23	MOTORIZED DAMPERS	FMS	23	FMS	FMS
24	EXHAUST FAN CONTROLS AND SUPPLY FAN CONTROLS	FMS	FMS	FMS	26
25	SPLIT SYSTEM CONTROLLERS, DEHUMIDIFIER CONTROLLERS	FMS	FMS	FMS	26
26	AIR HANDLING UNIT CONTROLLERS	FMS	FMS	FMS	26
27	GAS SUB-METERS	FMS	FMS	FMS	
28	POWER SUB-METERS	FMS	FMS	FMS	
29	DOMESTIC WATER HEATER/PUMP CONTROLS	FMS	FMS	FMS	26
30	VARIABLE REFRIGERANT FLOW UNIT CONTROLLERS	23	FMS	FMS	26
31	OCCUPANCY SENSORS	FMS	FMS	FMS	FMS
32	CARBON MONOXIDE DETECTOR/ALARM	FMS	FMS	FMS	

1. SMOKE DETECTORS MUST BE COORDINATED WITH THE FIRE ALARM CONTRACTOR.
2. THE ABOVE MATRIX IS FURNISHED BY THE ENGINEER OF RECORD AS A GUIDE FOR THE CONTRACTOR'S USE. THE CONTRACTOR SHALL SUBMIT A RESPONSIBILITY MATRIX BASED UPON THE CONTRACTOR'S PROJECT COORDINATION AND BID PREPARATION. THE CONTRACTOR SHALL PREPARE AND SUBMIT A FINAL MATRIX OF THE COORDINATED RESPONSIBILITIES OF THE REQUIRED TRADES WITH PROJECT SUBMITTALS AND SUB-CONTRACTORS IDENTIFIED BY NAME, ADDRESS, ETC.

READINESS CENTER
DDC SYSTEM NOTES

1. INTERFACE ALL EQUIPMENT INTO THE BUILDING AUTOMATION SYSTEM. GRAPHICS, FLOOR PLANS, EQUIPMENT GRAPHICS, ETC. SHALL BE PROVIDED IN THE BUILDING AUTOMATION SYSTEM TO COORDINATE WITH PLANS.
2. ALL UNITS SHALL BE PROGRAMMED FOR OCCUPIED MODE, OCCUPIED STANDBY, AND UNOCCUPIED MODE. LIGHTING OCCUPANCY SENSORS SHALL BE TIED INTO BUILDING AUTOMATION SYSTEM TO PLACE UNITS IN OCCUPIED MODE, OCCUPIED STANDBY MODE, OR UNOCCUPIED MODE.
3. ALL VARIABLE REFRIGERANT FLOW UNITS SHALL BE COMPLETELY INTERFACED TO THE BUILDING AUTOMATION SYSTEM. BUILDING AUTOMATION SYSTEM SHALL BE CAPABLE OF ADJUSTING SETPOINTS, PROGRAMMING OCCUPIED/UNOCCUPIED CONDITIONS FOR HOLIDAYS, WEEKDAYS, WEEKENDS, ETC. THE BUILDING AUTOMATION SYSTEM SHALL BE CAPABLE OF LIMITING ROOM OVERRIDES TO +/- 4 DEGREES (ADJUSTABLE).
4. INTERFACE ALL LIGHTING CIRCUITS OR OCCUPANCY SENSORS IN ANY GIVEN ZONE TO THE DDC CONTROLS FOR THE HVAC UNIT SERVING THAT ZONE. THE HVAC UNIT CONTROLS SHALL PROVIDE A STATUS POINT INDICATING THE STATE OF THE ZONE OCCUPANCY. FOR ALL ZONES, THE OCCUPANCY SENSOR SHALL PLACE THE HVAC UNIT IN STANDBY MODE WHEN THE ZONE IS UNOCCUPIED. OCCUPIED AND UNOCCUPIED MODES ARE CONTROLLED BY THE BUILDING SCHEDULE.
5. BUILDING AUTOMATION CONTRACTOR SHALL INSTALL GAS SUB-METER, AND POWER SUB-METER FOR INTERFACE WITH THE BUILDING AUTOMATION SYSTEM TO OBTAIN TOTAL ENERGY ON THE BUILDING. GAS SUB-METER PULSE OUTPUTS SHALL BE CONNECTED TO POWER METER PULSE INPUTS.
6. POWER SUB-METER INSTALLATION SHALL BE INSTALLED BETWEEN POWER METER AND BLDG. ENTRANCE AT BUILDING EXTERIOR. SUB-METER MUST BE LABELED "CUSTOMER OWNED". COORDINATE INSTALLATION WITH LOCAL UTILITY OFFICE. FIELD VERIFY EXACT LOCATION. REFERENCE PLUMBING PLANS FOR ADDITIONAL INFORMATION.
7. GAS PRESSURE TO THE BUILDING SHALL BE MEASURED BY LOCAL UTILITY. COORDINATE SUB-METER INSTALLATION WITH LOCAL OFFICE. REFERENCE PLUMBING PLANS FOR METER LOCATION.
8. INSTALLATION OF GAS SUB-METERS SHALL INCLUDE METER BYPASS. BYPASS PIPING SHALL BE FULL SIZE OF PIPE MAIN AND SHALL INCLUDE ISOLATION VALVES.
9. ALL EXHAUST FANS, SUPPLY FANS, ETC. SHALL BE INTERFACED TO THE BUILDING AUTOMATION SYSTEM. BUILDING AUTOMATION SYSTEM SHALL BE CAPABLE OF ON/OFF CONTROL OF FANS.
10. ALL NEW FRESH AIR MOTORIZED DAMPERS SHALL BE CONTROLLED BY THE BUILDING AUTOMATION SYSTEM WITH OCCUPANCY SCHEDULE.
11. ALL CONTROLS COMPONENTS INCLUDING SENSORS, DAMPERS, ETC. SHALL BE LABELED TO MATCH CONTROL DRAWINGS.
12. ALL I.P. ADDRESSES SHALL BE LABELED.
13. ALL CONTROL PANELS SHALL BE LABELED.
14. LAMINATED CONTROL DRAWINGS SHALL BE INSTALLED AT CONTROL JACE PANELS.
15. ALL JACE CONTROL PANELS AND VRF MASTER CONTROL PANEL SHALL INCLUDE BATTERY BACKUP UPS.
16. EXHAUST FAN CONTROL RELAYS SHALL BE WIRED TO THE NORMALLY CLOSED CONTACTS TO ALLOW THE FANS TO OPERATE IN THE EVENT THAT THE DDC CONTROLS ARE OFFLINE. EXHAUST FANS SHALL BE CONTROLLED BY THE BUILDING SCHEDULE.
17. COORDINATE DDC CONTROLLER TERMINAL ASSIGNMENTS WITH AANG DDC STANDARDS AND PRACTICES.
18. DDC CONTROLS AS-BUILT DRAWINGS SHALL INCLUDE COLOR CODES FOR ALL MULTI-CONDUCTOR CABLES.
19. CARBON MONOXIDE DETECTORS SHALL BE MACURCO MODEL CM-6 (OR APPROVED EQUAL).
20. ALL CONTROL DEVICES SHOWN ON THE CONTROL DIAGRAMS SHALL BE FURNISHED BY THE FMS CONTRACTOR UNLESS OTHERWISE NOTED OR SPECIFIED.
21. ALL COMPONENTS REQUIRED FOR THE SEQUENCES OF OPERATION, SHOWN AND/OR DESCRIBED ON THE CONTROL DIAGRAMS AND/OR SPECIFICATIONS, OR AS REQUIRED FOR A PROPERLY OPERATING SYSTEM SHALL BE FURNISHED AND INSTALLED BY THE FMS CONTRACTOR UNLESS OTHERWISE NOTED.
22. FMS CONTRACTOR IS RESPONSIBLE TO FURNISH, INSTALL, AND WIRE ALL COMPONENTS REQUIRED FOR INTEGRATION OF INFORMATION SHOWN TO BE ACCESSED BY THE FMS FROM OTHER SYSTEMS AND EQUIPMENT UNLESS OTHERWISE BE NOTED OR SPECIFIED.
23. ALL POWER WIRING AND TRANSFORMERS FOR SENSORS, ACTUATORS, AND OTHER CONTROL COMPONENTS AS REQUIRED FOR THE FMS AND/OR DDC SYSTEMS TO FUNCTION PROPERLY, SHALL BE FURNISHED AND INSTALLED BY THE FMS CONTRACTOR UNLESS OTHERWISE SHOWN, NOTED, OR SPECIFIED.
24. ALL POWER WIRING FOR SENSORS, ACTUATORS, AND OTHER DEVICES SHALL BE FROM THE DDC PANEL OR THE FMS/BAS PANEL OF THE ASSOCIATED SYSTEM.
25. ALL CONTROL, INTERLOCK, AND POWER WIRING SHALL BE INSTALLED PER THE ELECTRICAL SPECIFICATION, LOCAL, STATE, AND NATIONAL CODES. RACEWAY SHALL BE INSTALLED PER THE ELECTRICAL SPECIFICATIONS.
26. ALL CONTROL POINTS SHOWN ON THE CONTROL DIAGRAMS SHALL BE PROVIDED AND INTEGRATED INTO A FMS/BAS SYSTEM GRAPHIC REPRESENTATIVE OF THE CONTROL DIAGRAMS.
27. ALL CONTROL BANDS, SETPOINTS, SETPOINT LIMITS, SETPOINT INCREMENT VALUES, SETPOINT DECREMENT VALUES, ALARM LIMITS, AND OTHER PARAMETERS SHALL BE ADJUSTABLE FROM THE FMS/BAS.
28. ALL SETPOINTS SHALL BE ADJUSTABLE FROM THE FMS/BAS SYSTEM GRAPHIC(S).
29. SPACE SETPOINTS SHALL BE ADJUSTABLE FROM THE ROOM SENSOR UNLESS OTHERWISE SHOWN ON DRAWINGS OR SPECIFIED.
30. THE FMS/BAS SYSTEM GRAPHICS SHALL BE LINKED WITH ASSOCIATED BUILDING FLOOR PLANS FROM THE SPACE SENSOR OR AREA SERVED.
31. WHERE ONE SYSTEM IS ASSOCIATED WITH ANOTHER SYSTEM, THE SYSTEM GRAPHIC SHALL BE LINKED TO THE ASSOCIATED GRAPHIC AS WELL AS THE BUILDING FLOOR PLAN GRAPHIC. EXAMPLE - A WATER SOURCE/GEOTHERMAL HEAT PUMP UNIT SYSTEM GRAPHIC SHALL BE LINKED TO THE LOOP WATER SYSTEM GRAPHIC IN ADDITION TO BOTH BEING LINKED TO THE BUILDING FLOOR PLAN.
32. THE BUILDING FLOOR PLAN SHALL DISPLAY THE SPACE TEMPERATURE AT EACH SPACE SENSOR LOCATION WITH AREA SERVED DISPLAYED IN SEPARATE COLORS BASED ON THE CONDITION OF THE ZONE. EXAMPLE - ALARM, NORMAL, HIGH OR LOW TEMPERATURE, HIGH OR LOW HUMIDITY, ETC.
33. ALL BUILDING FLOOR PLANS AND SYSTEM GRAPHICS SHALL DISPLAY OUTSIDE AIR TEMPERATURE AND HUMIDITY.
34. THE FLOOR PLAN GRAPHICS SHALL BE LINKED TO A BUILDING GRAPHIC WITH A DIGITAL PHOTOGRAPH BACKGROUND OF THE ACTUAL BUILDING. DURING CONSTRUCTION A TEMPORARY GRAPHICS MAY BE USED THAT IS REPRESENTATIVE OF THE BUILDING.
35. ALL GRAPHICS SHALL BE SUBMITTED IN COLOR WITH THE FMS/BAS SUBMITTAL.
36. EMERGENCY AIR DISTRIBUTION SHUTOFF SWITCH SHALL BE FURNISHED AND INSTALLED AS PART OF THE HVAC CONTROL SYSTEM. EMERGENCY SHUTOFF SWITCH SHALL IMMEDIATELY SHUT DOWN THE AIR DISTRIBUTION SYSTEM THROUGHOUT THE BUILDING. REFERENCE PLANS FOR SHUTOFF SWITCH LOCATION. SHUTOFF SWITCH SHALL BE LABELED "EMERGENCY HVAC SHUTOFF SWITCH". SHUTOFF SWITCH SHALL NOT BE THE SAME COLOR AS THE FIRE ALARM STATIONS. ALL OUTSIDE AIR DAMPERS SHALL CLOSE WHEN EMERGENCY SHUTOFF SWITCH IS ACTIVATED.
37. CONTRACTOR SHALL SUBMIT SCREENSHOTS OF THE CONTROLS GRAPHICS A MINIMUM OF SEVENTY-TWO (72) HOURS PRIOR TO REVIEW FOR SUBSTANTIAL COMPLETION.
38. THREE INCH (3") HYDRONIC RUNOUTS TO UNIT SUPPLY/GPTB BUILDING SHALL INCLUDE CLAMP ON TYPE TEMPERATURE SENSORS INTERFACED TO THE BUILDING AUTOMATION SYSTEM FOR LOOP CONTROL BASED ON TEMPERATURE.

READINESS CENTER
HVAC DETAILS

WHORTON ENGINEERING, INC.
HVAC - PLUMBING - PROCESS CONTROL
RANDALL WHORTON, P.E.
PHONE: (256) 820-9897
25 SUMMERALL GATE ROAD
ANNISTON, ALABAMA 36205

WHORTON ENGINEERING PROJECT NO. 22164

SS&L ARCHITECTS
Montgomery | Dothan | Auburn | Huntsville | Pensacola
WWW.SSLARCH.COM | 256.285.1063

Rev.	Description	Date

Job Number 21112
AL ARNG IFB # AC-25-B-0006-S
Date NOVEMBER 1, 2024
Drawn By JH
Checked By RDW

Project Title
HUNTSVILLE READINESS CENTER
5180 MOORE'S MILL ROAD
HUNTSVILLE AL, 35811

Sheet Title
READINESS CENTER HVAC DETAILS

Sheet Number
RM2.12

ALABAMA LICENSED PROFESSIONAL ENGINEER No. 14192 RANDALL D. WHORTON
11-05-2024

READINESS CENTER
2021 IMC TABLE 403.3 COMPLIANCE CALCULATIONS

ROOM NAME	AREA (SF)	PEOPLE (QTY)	OUTDOOR AIR CALCULATIONS			EZ	VOZ CFM	VPZ CFM	ZP VOZ/VPZ	EV	VOT	REQUIRED OSA CFM	DESIGN OSA CFM	EXHAUST AIR					UNIT
			PEOPLE (CFM/PERSON)	AREA (CFM/SF)	TOTAL (VOU)									CFM/SF	FIXTURES	UNIT	REQUIRED CFM	DESIGN CFM	
LOBBY/CORRIDOR	1,379	0	0.0	0.06	83	1	83					83	100						OSA-R1
RECRUITMENT AND RETAINMENT OFFICE	143	1	5.0	0.06	14	1	14					14	20						OSA-R1
FAMILY READINESS OFFICE	298	1	5.0	0.06	23	1	23					23	30						OSA-R1
BREAK ROOM	529	8	5.0	0.06	72	1	72					72	90						OSA-R1
I.T.	111	1	5.0	0.06	12	1	12					12	15						OSA-R1
CLASSROOM	822	25	5.0	0.06	174	1	174					174	175						OSA-R1
CORRIDOR	1,109	0	0.0	0.06	67	1	67					67	85						OSA-R1
OPEN OFFICE/CIRCULATION	3,630	24	5.0	0.06	338	1	338					338	350						OSA-R1
OFFICE	138	1	5.0	0.06	13	1	17					17	20						OSA-R1
OFFICE	142	1	5.0	0.06	14	1	17					17	20						OSA-R1
OFFICE	139	1	5.0	0.06	13	1	17					17	20						OSA-R1
OFFICE	142	1	5.0	0.06	14	1	17					17	20						OSA-R1
OFFICE	142	1	5.0	0.06	14	1	17					17	20						OSA-R1
OFFICE	139	1	5.0	0.06	13	1	17					17	20						OSA-R1
OFFICE	142	1	5.0	0.06	14	1	17					17	20						OSA-R1
OFFICE	138	1	5.0	0.06	13	1	17					17	20						OSA-R1
OFFICE	142	1	5.0	0.06	14	1	17					17	20						OSA-R1
OPEN OFFICE	516	3	5.0	0.06	46	1	46					46	60						OSA-R1
COMMAND OFFICE	193	1	5.0	0.06	17	1	17					17	25						OSA-R1
COMMAND OFFICE	193	1	5.0	0.06	17	1	17					17	25						OSA-R1
PHYSICAL FITNESS	859	9	20.0	0.06	232	1	232					232	260						OSA-R1
LOCKER	3,590												365	0.25			898	900	OSA-R1
ASSEMBLY HALL/CORRIDOR	3,783	125	5.0	0.06	852	1	852					852	1,040						OSA-R1
JANITOR/STORAGE	72														1	75	75	75	OSA-R1
MEN/SHOWER	610														6/6	50/75	750	750	OSA-R1
WOMEN/SHOWER	610														6/6	50/75	750	750	OSA-R1
TOTAL (OSA-R1)													2,820					2,475	OSA-R1
LOBBY/CORRIDOR	1,379	0	0.0	0.06	83	1	83					83	100						OSA-R2
LACTATION	98	1	5.0	0.06	11	1	11					11	15						OSA-R2
LEARNING CENTER A	194	1	5.0	0.06	17	1	17					17	25						OSA-R2
LEARNING CENTER B	392	8	5.0	0.06	64	1	64					64	75						OSA-R2
ASSEMBLY HALL/CORRIDOR	1,864	67	5.0	0.06	447	1	477					477	615						OSA-R2
TABLE/CHAIR STORAGE	313	1	5.0	0.06	24	1	24					24	25						OSA-R2
KITCHEN	1,943	20	7.5	0.12	383	1	383					383	475	0.7			1,360	445 + (5,680)	OSA-R2 (KEF-R1A/KEF-R1B)
DRY STORAGE	207	1	5.0	0.06	17	1	17					17	20						OSA-R2
SCULLERY	470	5	7.5	0.18	122	1	122					122	150						OSA-R2
OFFICE	143	1	5.0	0.06	14	1	14					14	20						OSA-R2
OPEN OFFICE	516	3	5.0	0.06	46	1	46					46	50						OSA-R2
COMMAND OFFICE	193	1	5.0	0.06	17	1	17					17	25						OSA-R2
COMMAND OFFICE	193	1	5.0	0.06	17	1	17					17	25						OSA-R2
OFFICE	138	1	5.0	0.06	13	1	13					13	20						OSA-R2
OFFICE	142	1	5.0	0.06	14	1	14					14	20						OSA-R2
OFFICE	139	1	5.0	0.06	13	1	13					13	20						OSA-R2
OFFICE	142	1	5.0	0.06	14	1	14					14	20						OSA-R2
OFFICE	142	1	5.0	0.06	14	1	14					14	20						OSA-R2
OFFICE	142	1	5.0	0.06	14	1	14					14	20						OSA-R2
OFFICE	139	1	5.0	0.06	13	1	13					13	20						OSA-R2
OFFICE	142	1	5.0	0.06	14	1	14					14	20						OSA-R2
OFFICE	138	1	5.0	0.06	13	1	13					13	20						OSA-R2
OPEN OFFICE/CIRCULATION	3,630	24	5.0	0.06	338	1	338					338	340						OSA-R2
CORRIDOR	998	0	0.0	0.06	60	1	60					60	70					170	OSA-R2
MULTIPURPOSE TRAINING AREA	1,551	33	5.0	0.06	258	1	258					258	260					205	OSA-R2
CLASSROOM	800	25	5.0	0.06	173	1	173					173	175						OSA-R2
CLASSROOM	800	25	5.0	0.06	173	1	173					173	175						OSA-R2
JANITOR	96														1	75	75	75	OSA-R2
WOMEN	319														4	75	300	790	OSA-R2
MEN	432														7	75	525	790	OSA-R2
TOTAL (OSA-R2)													2,820					2,475	OSA-R2

READINESS CENTER
2021 IMC CHAPTER 11 COMPLIANCE CALCULATIONS

UNIT MARK NO.	REFRIGERANT ZONE	REFRIGERANT ZONE AREA (SF)	MINIMUM ROOM HEIGHT (FT.)	REFRIGERANT ZONE VOLUME (CF)	2021 IMC TABLE – AMOUNT OF REFRIGERANT PER OCCUPIED SPACE (LBS) (NOTE 5)	MAX UNIT CHARGE (LBS)	2021 IMC TABLE 1104.4 COMPLIANCE
GHP-R1	CORRIDOR	1,890	8	15,120	72.6	2.5	YES
GHP-R2	LOBBY	660	8	5,280	25.3	2.5	YES
GHP-R3	CIRCULATION	445	8	3,560	17.1	1.5625	YES
GHP-R4	LEARNING CENTER A	168	8	1,344	6.5	1.4375	YES
GHP-R5	LEARNING CENTER B	363	8	2,904	13.9	2.0625	YES
GHP-R6	MECHANICAL	116	14	1,624	7.8	1.1875	
GHP-R7	MECHANICAL	116	14	1,624	7.8	1.6875	
GHP-R8	MECHANICAL	116	14	1,624	7.8	2.0625	
GHP-R9	MECHANICAL	116	14	1,624	7.8	1.8125	
TOTAL ZONE		116	14	1,624	7.8	6.75	YES
GHP-R10	CLASSROOM	770	8	6,160	29.6	2.5	YES
GHP-R11	MECHANICAL	489	14	6,846	32.9	2.0625	
GHP-R26	MECHANICAL	489	14	6,846	32.9	1.6875	
GHP-R27	MECHANICAL	489	14	6,846	32.9	3.8125	
TOTAL ZONE		489	14	6,846	32.9	7.5625	YES
GHP-R12	OPEN OFFICE	2,862	8	21,456	103.0	3.125	
GHP-R13	OPEN OFFICE	2,862	8	21,456	103.0	3.125	
TOTAL ZONE		2,862	8	21,456	103.0	6.25	YES
GHP-R14	OFFICE	126	8	1,008	4.8	0.875	YES
GHP-R15	OFFICE	126	8	1,008	4.8	0.875	YES
GHP-R16	OFFICE	126	8	1,008	4.8	0.875	YES
GHP-R17	OFFICE	126	8	1,008	4.8	0.875	YES
GHP-R18	OFFICE	126	8	1,008	4.8	0.875	YES
GHP-R19	OFFICE	126	8	1,008	4.8	0.875	YES
GHP-R20	OFFICE	126	8	1,008	4.8	0.875	YES
GHP-R21	OFFICE	126	8	1,008	4.8	0.875	YES
GHP-R22	OFFICE	126	8	1,008	4.8	0.875	YES
GHP-R23	OPEN OFFICE	485	8	3,880	18.6	1.5625	YES

1. OCCUPANCY CLASSIFICATION (2021 IMC 1103.2) = COMMERCIAL.
2. REFRIGERANT = R-32.
3. SYSTEM CLASSIFICATION (2021 IMC 1103.3) = HIGH PROBABILITY.
4. REFRIGERANT CLASSIFICATION A2 (2021 IMC TABLE 1103.1).
5. 2021 IMC TABLE 1103.1 – AMOUNT OF REFRIGERANT PER OCCUPIED SPACE = 4.8 LBS/1000 CF.

READINESS CENTER
HVAC COMPLIANCE CALCULATIONS

WHORTON ENGINEERING, INC.
HVAC – PLUMBING – PROCESS CONTROL
RANDALL WHORTON, P.E.
PHONE: (256) 820-9897
25 SUMMERALL GATE ROAD
ANNISTON, ALABAMA 36205

WHORTON ENGINEERING PROJECT NO. 22164

ALABAMA LICENSED PROFESSIONAL ENGINEER No.14192 RANDALL D. WHORTON
11-05-2024

SS&L ARCHITECTS
Montgomery | Dothan | Auburn | Huntsville | Pensacola
WWW.SSLARCH.COM | 256.285.1063

Rev.	Description	Date

Job Number: 21112
AL ARNG IFB #: AC-25-B-0006-S
Date: NOVEMBER 1, 2024
Drawn By: JH
Checked By: RDW
Project Title:

HUNTSVILLE READINESS CENTER
5180 MOORE'S MILL ROAD
HUNTSVILLE AL, 35811

Sheet Title: READINESS CENTER HVAC COMPLIANCE CALCULATIONS

Sheet Number: RM2.13

READINESS CENTER
2021 IMC CHAPTER 11 COMPLIANCE CALCULATIONS

UNIT MARK NO.	REFRIGERANT ZONE	REFRIGERANT ZONE AREA (SF)	MINIMUM ROOM HEIGHT (FT.)	REFRIGERANT ZONE VOLUME (CF)	2021 IMC TABLE – AMOUNT OF REFRIGERANT PER OCCUPIED SPACE (LBS) (NOTE 5)	MAX UNIT CHARGE (LBS)	2021 IMC TABLE 1104.4 COMPLIANCE
GHP–R24	COMMAND OFFICE	169	8	1,352	6.5	1.4375	YES
GHP–R25	COMMAND OFFICE	166	8	1,328	6.4	1.0	YES
GHP–R28	LOCKERS	3,510	8	28,080	134.8	2.5	YES
GHP–R29	WATER HEATERS	162	8	1,296	6.2	1.8125	
GHP–R30	WATER HEATERS	162	8	1,296	6.2	3.8125	
TOTAL ZONE		162	8	1,296	6.2	5.625	YES
GHP–R31	ASSEMBLY HALL	5,399	8	43,192	207.3	3.3125	
GHP–R32	ASSEMBLY HALL	5,399	8	43,192	207.3	3.3125	
GHP–R33	ASSEMBLY HALL	5,399	8	43,192	207.3	3.3125	
TOTAL ZONE		5,399	8	43,192	207.3	9.9375	YES
GHP–R34	WOMEN	488	8	3,904	19.0	0.875	YES
GHP–R35	MEN	490	8	3,920	19.0	0.875	YES
GHP–R36	TABLE/CHAIR STORAGE	301	8	2,408	12.0	0.875	YES
GHP–R37	MECHANICAL	879	8	7,032	34.0	3.8125	
GHP–R38	MECHANICAL	879	8	7,032	34.0	3.8125	
GHP–R39	MECHANICAL	879	8	7,032	34.0	0.875	
GHP–R42	MECHANICAL	879	8	7,032	34.0	1.6875	
GHP–R43	MECHANICAL	879	8	7,032	34.0	2.0625	
GHP–R60	MECHANICAL	879	8	7,032	34.0	1.6875	
TOTAL ZONE		879	8	7,032	34.0	13.9375	YES
GHP–R40	SCULLERY	445	8	3,560	17.0	1.8125	YES
GHP–R41	OFFICE	110	8	880	4.0	0.875	YES
GHP–R44	OPEN OFFICE	485	8	3,880	19.0	2.0625	YES
GHP–R45	COMMAND OFFICE	166	8	1,328	6.0	1.0	YES
GHP–R46	COMMAND OFFICE	169	8	1,352	6.0	1.4375	YES
GHP–R47	OFFICE	126	8	1,008	5.0	0.875	YES
GHP–R48	OFFICE	126	8	1,008	5.0	0.875	YES
GHP–R49	OFFICE	126	8	1,008	5.0	0.875	YES
GHP–R50	OFFICE	126	8	1,008	5.0	0.875	YES

1. OCCUPANCY CLASSIFICATION (2021 IMC 1103.2) = COMMERCIAL.
2. REFRIGERANT = R–32.
3. SYSTEM CLASSIFICATION (2021 IMC 1103.3) = HIGH PROBABILITY.
4. REFRIGERANT CLASSIFICATION A2 (2021 IMC TABLE 1103.1).
5. 2021 IMC TABLE 1103.1 – AMOUNT OF REFRIGERANT PER OCCUPIED SPACE = 4.8 LBS/1000 CF.

READINESS CENTER
2021 IMC CHAPTER 11 COMPLIANCE CALCULATIONS

UNIT MARK NO.	REFRIGERANT ZONE	REFRIGERANT ZONE AREA (SF)	MINIMUM ROOM HEIGHT (FT.)	REFRIGERANT ZONE VOLUME (CF)	2021 IMC TABLE – AMOUNT OF REFRIGERANT PER OCCUPIED SPACE (LBS) (NOTE 5)	MAX UNIT CHARGE (LBS)	2021 IMC TABLE 1104.4 COMPLIANCE
GHP–R51	OFFICE	126	8	1,008	5.0	0.875	YES
GHP–R52	OFFICE	126	8	1,008	5.0	0.875	YES
GHP–R53	OFFICE	126	8	1,008	5.0	0.875	YES
GHP–R54	OFFICE	126	8	1,008	5.0	0.875	YES
GHP–R55	OFFICE	126	8	1,008	5.0	0.875	YES
GHP–R56	OPEN OFFICE	2,682	8	21,456	103.0	3.125	
GHP–R57	OPEN OFFICE	2,682	8	21,456	103.0	3.125	
TOTAL ZONE		2,682	8	21,456	103.0	6.25	YES
GHP–R58	CIRCULATION	445	8	3,560	17.0	1.5625	YES
GHP–R59	CORRIDOR	905	8	7,240	35.0	2.0625	YES
GHP–R61	MULTIPURPOSE TRAINING	1,502	8	12,016	58.0	2.5	
GHP–R62	MULTIPURPOSE TRAINING	1,502	8	12,016	58.0	2.5	
TOTAL ZONE		1,502	8	12,016	58.0	5.0	YES
GHP–R63	CLASSROOM	761	8	6,088	29.0	2.5	
GHP–R64	CLASSROOM	761	8	6,088	29.0	2.5	
TOTAL ZONE		761	8	6,088	29.0	5.0	YES

1. OCCUPANCY CLASSIFICATION (2021 IMC 1103.2) = COMMERCIAL.
2. REFRIGERANT = R–32.
3. SYSTEM CLASSIFICATION (2021 IMC 1103.3) = HIGH PROBABILITY.
4. REFRIGERANT CLASSIFICATION A2 (2021 IMC TABLE 1103.1).
5. 2021 IMC TABLE 1103.1 – AMOUNT OF REFRIGERANT PER OCCUPIED SPACE = 4.8 LBS/1000 CF.

READINESS CENTER
2021 IMC CHAPTER 11 COMPLIANCE CALCULATIONS

UNIT MARK NO.	REFRIGERANT ZONE	REFRIGERANT ZONE AREA (SF)	ROOM HEIGHT (FT.)	REFRIGERANT ZONE VOLUME (CF)	2021 IMC TABLE – AMOUNT OF REFRIGERANT PER OCCUPIED SPACE (LBS) (NOTE 5)	MAX UNIT CHARGE (LBS)	2021 IMC TABLE 1104.4 COMPLIANCE
OSA–R1	ZONE 1	18,487	9	166,383	3,660	28.75	YES
OSA–R2	ZONE 2	17,791	9	160,119	3,523	28.75	YES

1. OCCUPANCY CLASSIFICATION (2021 IMC 1103.2) = COMMERCIAL.
2. REFRIGERANT = R–454B.
3. SYSTEM CLASSIFICATION (2021 IMC 1103.3) = HIGH PROBABILITY.
4. REFRIGERANT CLASSIFICATION A2 (2021 IMC TABLE 1103.1).
5. 2021 IMC TABLE 1103.1 – AMOUNT OF REFRIGERANT PER OCCUPIED SPACE = 22 LBS/1000 CF.

READINESS CENTER
HVAC COMPLIANCE CALCULATIONS

WHORTON ENGINEERING, INC.
HVAC – PLUMBING – PROCESS CONTROL
RANDALL WHORTON, P.E.
PHONE: (256) 820–9897
25 SUMMERALL GATE ROAD
ANNISTON, ALABAMA 36205

WHORTON ENGINEERING PROJECT NO. 22164

ALABAMA REGISTERED PROFESSIONAL ENGINEER No.14192 RANDALL D. WHORTON
11–05–2024

SS&L ARCHITECTS
Montgomery | Dothan | Auburn | Huntsville | Pensacola
WWW.SSLARCH.COM | 256.285.1063

Rev.	Description	Date

Job Number: 21112
AL ARNG IFB #: AC-25-B-0006-S
Date: NOVEMBER 1, 2024
Drawn By: JH
Checked By: RDW

Project Title
HUNTSVILLE READINESS CENTER
5180 MOORE'S MILL ROAD
HUNTSVILLE AL, 35811

Sheet Title
READINESS CENTER HVAC COMPLIANCE CALCULATIONS

Sheet Number
RM2.14

GENERAL NOTES:

1. ALL DIFFUSERS/GRILLE RUNOUTS SHALL INCLUDE SPIN-IN WITH DAMPER.
2. ALL OUTSIDE AIR RUNOUTS, EXHAUST, ETC. AND BRANCH DUCTS SHALL INCLUDE SPIN-IN WITH DAMPER
3. REFERENCE PLUMBING PLANS FOR CONDENSATE PIPING.
4. TEST AND BALANCE IS REQUIRED FOR ALL UNITS, DUCT, GRILLES, ETC. SHOWN ON PLANS. REFERENCE SPECIFICATIONS FOR ADDITIONAL INFORMATION.
5. ALL LOUVERS SHALL HAVE A PLENUM BOX. PLENUM BOX SHALL BE SIZED TO MATCH LOUVER DIMENSIONS. PLENUM BOX SHALL BE 18" DEEP.
6. MECHANICAL CONTRACTOR SHALL COORDINATE ROUTING OF REFRIGERANT LINES AND DUCTWORK WITH ALL OTHER TRADES.
7. COORDINATE FINAL LOCATION OF PORTABLE DEHUMIDIFIERS WITH ARCHITECT, PLUMBING, ELECTRICAL, AND GENERAL CONTRACTOR PRIOR TO INSTALLATION.

READINESS CENTER DIFFUSER SCHEDULE

Tag	Size	Type	Neck Size	Model Number	Manufacturer	Notes
SD-6	24"X24"	SUPPLY	6" DIA	TDC	TITUS	
SD-8	24"X24"	SUPPLY	8" DIA	TDC	TITUS	
SD-10	24"X24"	SUPPLY	10" DIA	TDC	TITUS	
SD-12	24"X24"	SUPPLY	12" DIA	TDC	TITUS	
SD-1212	24"X24"	SUPPLY	12"X12"	TDC	TITUS	
ASD-6	24"X24"	SUPPLY	6" DIA	TDC-AA	TITUS	ALUMINUM
ASD-8	24"X24"	SUPPLY	8" DIA	TDC-AA	TITUS	ALUMINUM
ASD-10	24"X24"	SUPPLY	10" DIA	TDC-AA	TITUS	ALUMINUM
DSD-8	24"X24"	SUPPLY	8" DIA	8F	TITUS	ALUMINUM
DSD-10	24"X24"	SUPPLY	10" DIA	8F	TITUS	ALUMINUM
DSD-14	24"X24"	SUPPLY	14" DIA	8F	TITUS	ALUMINUM
OAS-24	24"X24"	SUPPLY	22"X22"	8R	TITUS	
SWS-1212	12"X12"	SUPPLY	---	272RL	TITUS	
SWS-1414	14"X14"	SUPPLY	---	272RL	TITUS	
SWS-3012	30"X12"	SUPPLY	---	272RL	TITUS	
LS-483	48"	SUPPLY	5 SLOTS-1" WIDE	ML-39	TITUS	
RG-24	24"X24"	RETURN	22"X22"	8RF	TITUS	WITH 1" FILTER
ARG-24	24"X24"	RETURN	22"X22"	8FF	TITUS	ALUMINUM/WITH 1" FILTER
OAE-24	24"X24"	EXHAUST	22"X22"	8RF	TITUS	WITH 1" FILTER
AOAE-24	24"X24"	EXHAUST	22"X22"	8FF	TITUS	ALUMINUM/WITH 1" FILTER
ATG-24	24"X24"	TRANSFER	22"X22"	8F	TITUS	
OAG-2424	24"X24"	TRANSFER	---	33RL	TITUS	
SWR-1212	12"X12"	RETURN	---	33RFL	TITUS	WITH 1" FILTER
SWR-1414	14"X14"	RETURN	---	33RFL	TITUS	WITH 1" FILTER
SWR-3030	30"X30"	RETURN	---	33RFL	TITUS	WITH 1" FILTER
FURNISH AND INSTALL AN INSULATION BLANKET ON THE BACK OF ALL DIFFUSERS AND GRILLES						

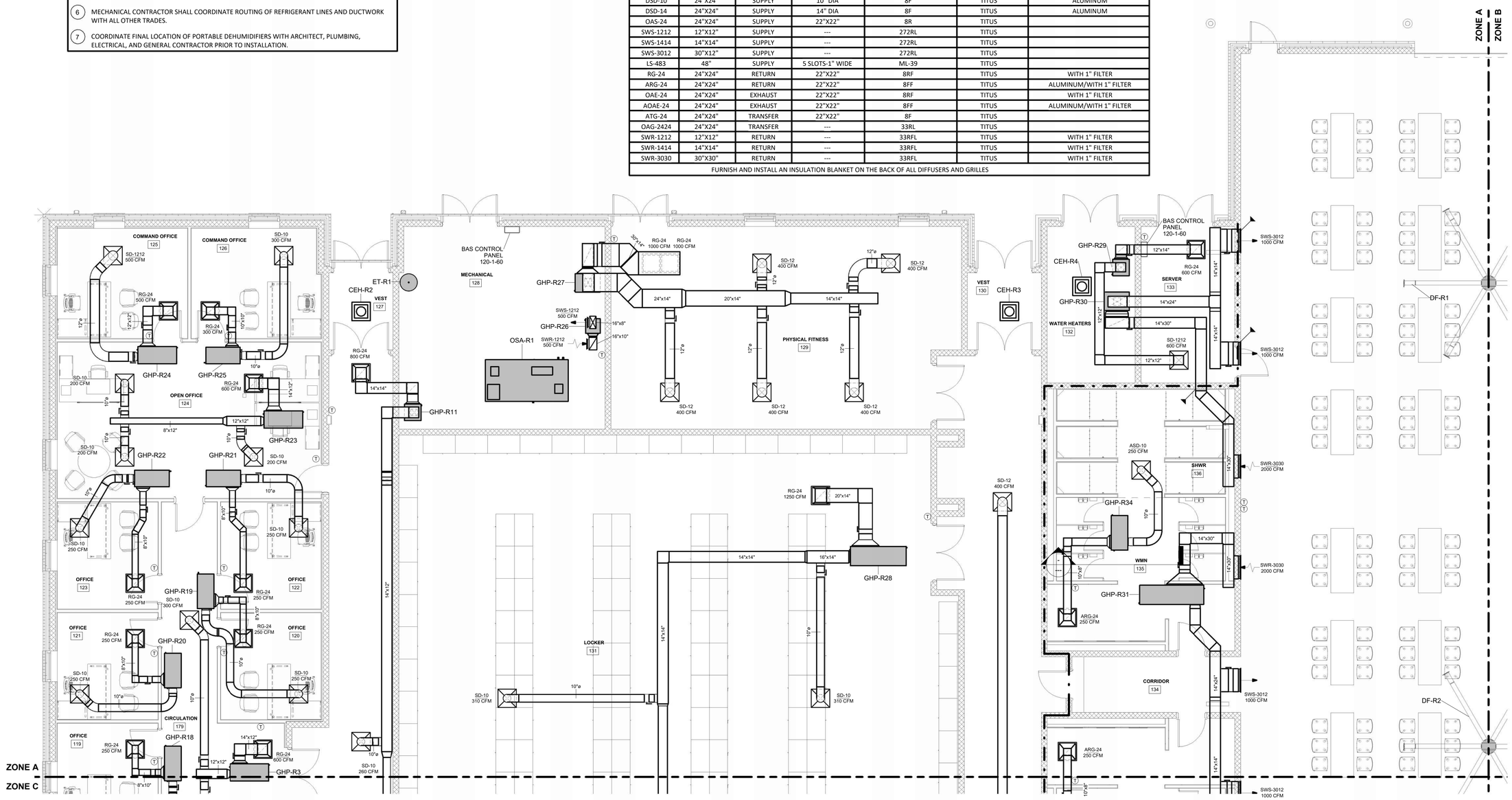

FIRE WALL LEGEND

ONE HOUR RATED FIRE BARRIER

ZONE A - READINESS CENTER - HVAC PLAN

3/16" = 1'-0"

0' 2' 4' 8' 16'

WHORTON ENGINEERING, INC.

HVAC – PLUMBING – PROCESS CONTROL

RANDALL WHORTON, P.E.
PHONE: (256) 820-9897

25 SUMMERALL GATE ROAD
ANNISTON, ALABAMA 36205

WHORTON ENGINEERING PROJECT NO. 22164

ALABAMA No.14192 PROFESSIONAL ENGINEER RANDALL D. WHORTON

11-11-2024

S|S&L ARCHITECTS
Montgomery | Dothan | Auburn | Huntsville | Pensacola
WWW.SSLARCH.COM | 334.283.6603

Rev.	Description	Date

Job Number: 21112

AL ARNG IFB #: AC-25-B-0006-S

Date: NOVEMBER 1, 2024

Drawn By: RDW

Checked By: RDW

Project Title:

HUNTSVILLE READINESS CENTER
5180 MOORE'S MILL ROAD
HUNTSVILLE AL, 35811

Sheet Title: ZONE A - READINESS CENTER - HVAC PLAN

Sheet Number: RM3.1

GENERAL NOTES:

1. ALL DIFFUSERS/GRILLE RUNOUTS SHALL INCLUDE SPIN-IN WITH DAMPER.
2. ALL OUTSIDE AIR RUNOUTS, EXHAUST, ETC. AND BRANCH DUCTS SHALL INCLUDE SPIN-IN WITH DAMPER
3. REFERENCE PLUMBING PLANS FOR CONDENSATE PIPING.
4. TEST AND BALANCE IS REQUIRED FOR ALL UNITS, DUCT, GRILLES, ETC. SHOWN ON PLANS. REFERENCE SPECIFICATIONS FOR ADDITIONAL INFORMATION.
5. ALL LOUVERS SHALL HAVE A PLENUM BOX. PLENUM BOX SHALL BE SIZED TO MATCH LOUVER DIMENSIONS. PLENUM BOX SHALL BE 18" DEEP.
6. MECHANICAL CONTRACTOR SHALL COORDINATE ROUTING OF REFRIGERANT LINES AND DUCTWORK WITH ALL OTHER TRADES.
7. COORDINATE FINAL LOCATION OF PORTABLE DEHUMIDIFIERS WITH ARCHITECT, PLUMBING, ELECTRICAL, AND GENERAL CONTRACTOR PRIOR TO INSTALLATION.

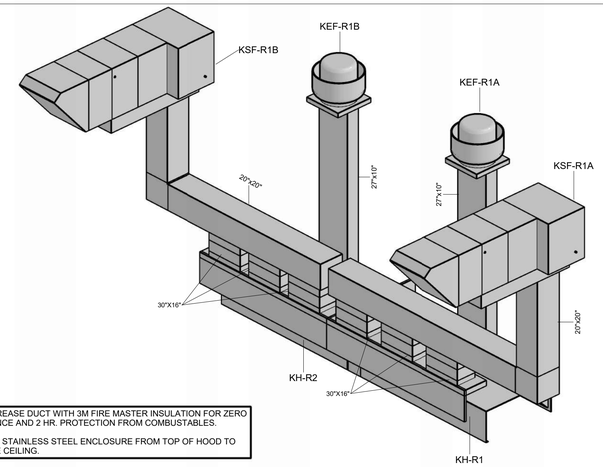

1. WRAP GREASE DUCT WITH 3M FIRE MASTER INSULATION FOR ZERO CLEARANCE AND 2 HR. PROTECTION FROM COMBUSTIBLES.
2. PROVIDE STAINLESS STEEL ENCLOSURE FROM TOP OF HOOD TO 3" ABOVE CEILING.

ENLARGED KH-R1 SCHEMATIC DUCT DETAIL

1/4" = 1'-0"

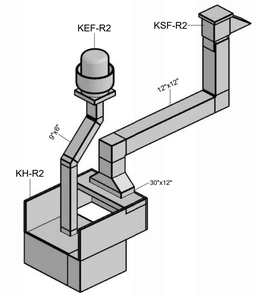

1. WRAP GREASE DUCT WITH 3M FIRE MASTER INSULATION FOR ZERO CLEARANCE AND 2 HR. PROTECTION FROM COMBUSTIBLES.
2. PROVIDE STAINLESS STEEL ENCLOSURE FROM TOP OF HOOD TO 3" ABOVE CEILING.

ENLARGED KH-R2 SCHEMATIC DUCT DETAIL

1/4" = 1'-0"

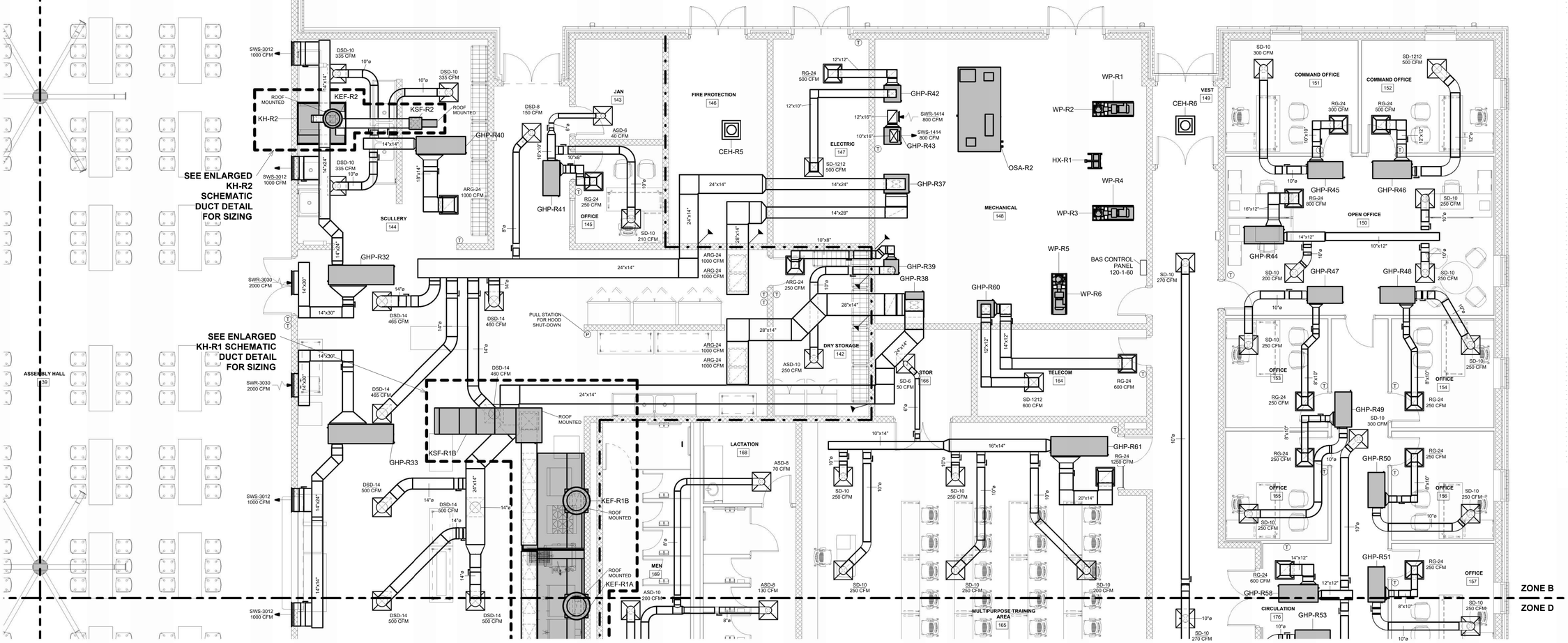

FIRE WALL LEGEND

- · — · — · -	ONE HOUR RATED FIRE BARRIER

ZONE B - READINESS CENTER - HVAC PLAN

3/16" = 1'-0"

0' 2' 4' 8' 16'

WHORTON ENGINEERING, INC.

HVAC – PLUMBING – PROCESS CONTROL

RANDALL WHORTON, P.E.
PHONE: (256) 820-9897

25 SUMMERALL GATE ROAD
ANNISTON, ALABAMA 36205

WHORTON ENGINEERING PROJECT NO. 22164

S|S&L ARCHITECTS
Montgomery | Dothan | Auburn | Huntsville | Pensacola
WWW.SSLARCH.COM | 334.283.6603

Rev.	Description	Date

Job Number: 21112

AL ARNG IFB #: AC-25-B-0006-S

Date: NOVEMBER 1, 2024

Drawn By: RDW

Checked By: RDW

Project Title:

HUNTSVILLE READINESS CENTER
5180 MOORE'S MILL ROAD
HUNTSVILLE AL, 35811

Sheet Title: ZONE B - READINESS CENTER - HVAC PLAN

Sheet Number: RM3.2

STATE OF ALABAMA LICENSED PROFESSIONAL ENGINEER No.14192 RANDALL D. WHORTON
11-11-2024

GENERAL NOTES:

1. ALL DIFFUSERS/GRILLE RUNOUTS SHALL INCLUDE SPIN-IN WITH DAMPER.
2. ALL OUTSIDE AIR RUNOUTS, EXHAUST, ETC. AND BRANCH DUCTS SHALL INCLUDE SPIN-IN WITH DAMPER.
3. REFERENCE PLUMBING PLANS FOR CONDENSATE PIPING.
4. TEST AND BALANCE IS REQUIRED FOR ALL UNITS, DUCT, GRILLES, ETC. SHOWN ON PLANS. REFERENCE SPECIFICATIONS FOR ADDITIONAL INFORMATION.
5. ALL LOUVERS SHALL HAVE A PLENUM BOX. PLENUM BOX SHALL BE SIZED TO MATCH LOUVER DIMENSIONS. PLENUM BOX SHALL BE 18" DEEP.
6. MECHANICAL CONTRACTOR SHALL COORDINATE ROUTING OF REFRIGERANT LINES AND DUCTWORK WITH ALL OTHER TRADES.
7. COORDINATE FINAL LOCATION OF PORTABLE DEHUMIDIFIERS WITH ARCHITECT, PLUMBING, ELECTRICAL, AND GENERAL CONTRACTOR PRIOR TO INSTALLATION.

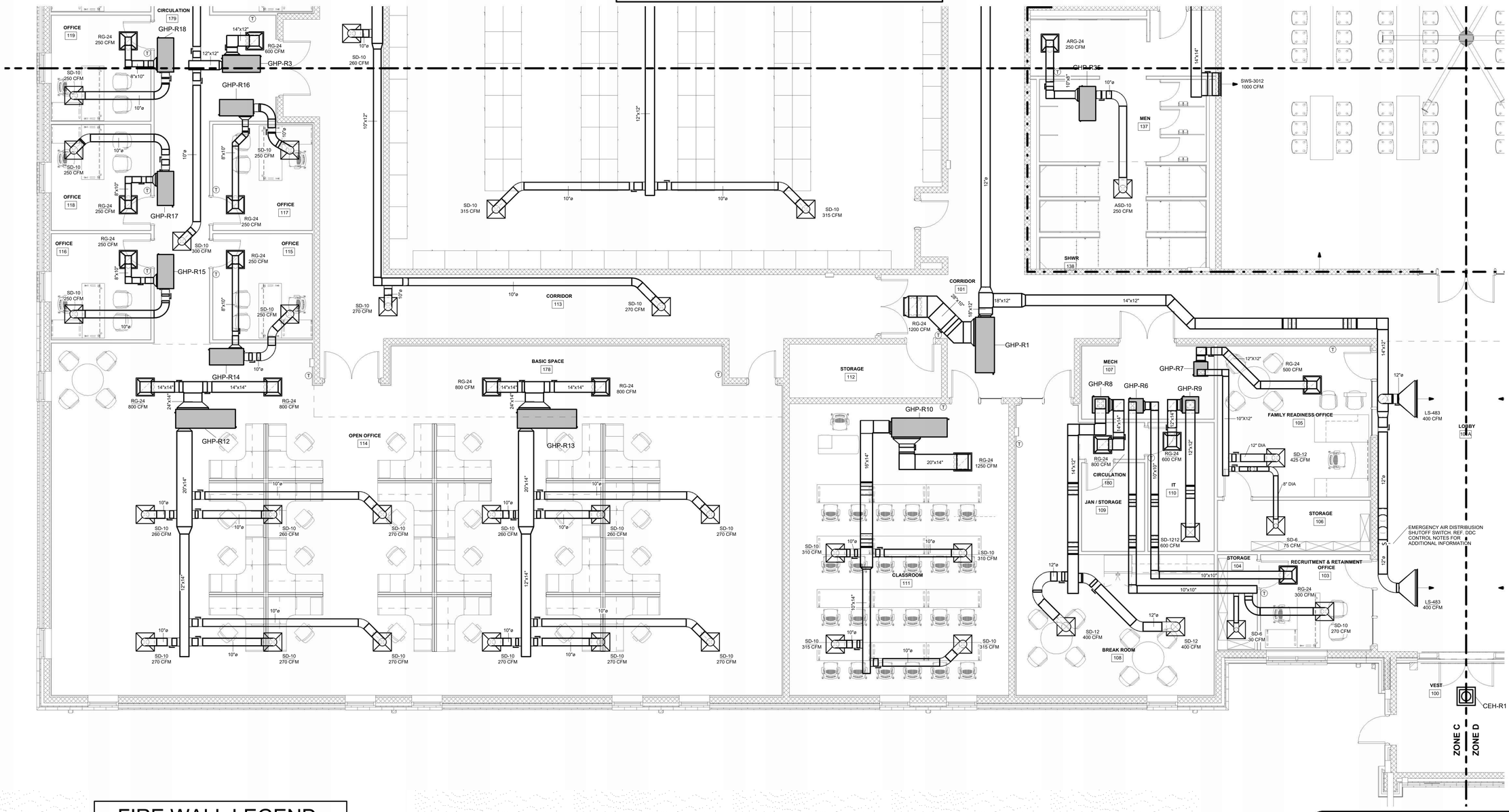

FIRE WALL LEGEND

ONE HOUR RATED FIRE BARRIER

ZONE C - READINESS CENTER - HVAC PLAN

3/16" = 1'-0"

0' 2' 4' 8' 16'

WHORTON ENGINEERING, INC.

HVAC – PLUMBING – PROCESS CONTROL

RANDALL WHORTON, P.E.
PHONE: (256) 820-9897

25 SUMMERALL GATE ROAD
ANNISTON, ALABAMA 36205

WHORTON ENGINEERING PROJECT NO. 22164

S|S&L ARCHITECTS
Montgomery | Dothan | Auburn | Huntsville | Pensacola
WWW.SSLARCH.COM | 334.283.6603

Rev.	Description	Date

Job Number: 21112

AL ARNG IFB #: AC-25-B-0006-S

Date: NOVEMBER 1, 2024

Drawn By: RDW

Checked By: RDW

Project Title

HUNTSVILLE READINESS CENTER
5180 MOORE'S MILL ROAD
HUNTSVILLE AL, 35811

Sheet Title: ZONE C - READINESS CENTER - HVAC PLAN

Sheet Number: RM3.3

ALABAMA LICENSED PROFESSIONAL ENGINEER No.14192 RANDALL D. WHORTON

11-11-2024

GENERAL NOTES:

1. ALL DIFFUSERS/GRILLE RUNOUTS SHALL INCLUDE SPIN-IN WITH DAMPER.
2. ALL OUTSIDE AIR RUNOUTS, EXHAUST, ETC. AND BRANCH DUCTS SHALL INCLUDE SPIN-IN WITH DAMPER
3. REFERENCE PLUMBING PLANS FOR CONDENSATE PIPING.
4. TEST AND BALANCE IS REQUIRED FOR ALL UNITS, DUCT, GRILLES, ETC. SHOWN ON PLANS. REFERENCE SPECIFICATIONS FOR ADDITIONAL INFORMATION.
5. ALL LOUVERS SHALL HAVE A PLENUM BOX. PLENUM BOX SHALL BE SIZED TO MATCH LOUVER DIMENSIONS. PLENUM BOX SHALL BE 18" DEEP.
6. MECHANICAL CONTRACTOR SHALL COORDINATE ROUTING OF REFRIGERANT LINES AND DUCTWORK WITH ALL OTHER TRADES.
7. COORDINATE FINAL LOCATION OF PORTABLE DEHUMIDIFIERS WITH ARCHITECT, PLUMBING, ELECTRICAL, AND GENERAL CONTRACTOR PRIOR TO INSTALLATION.

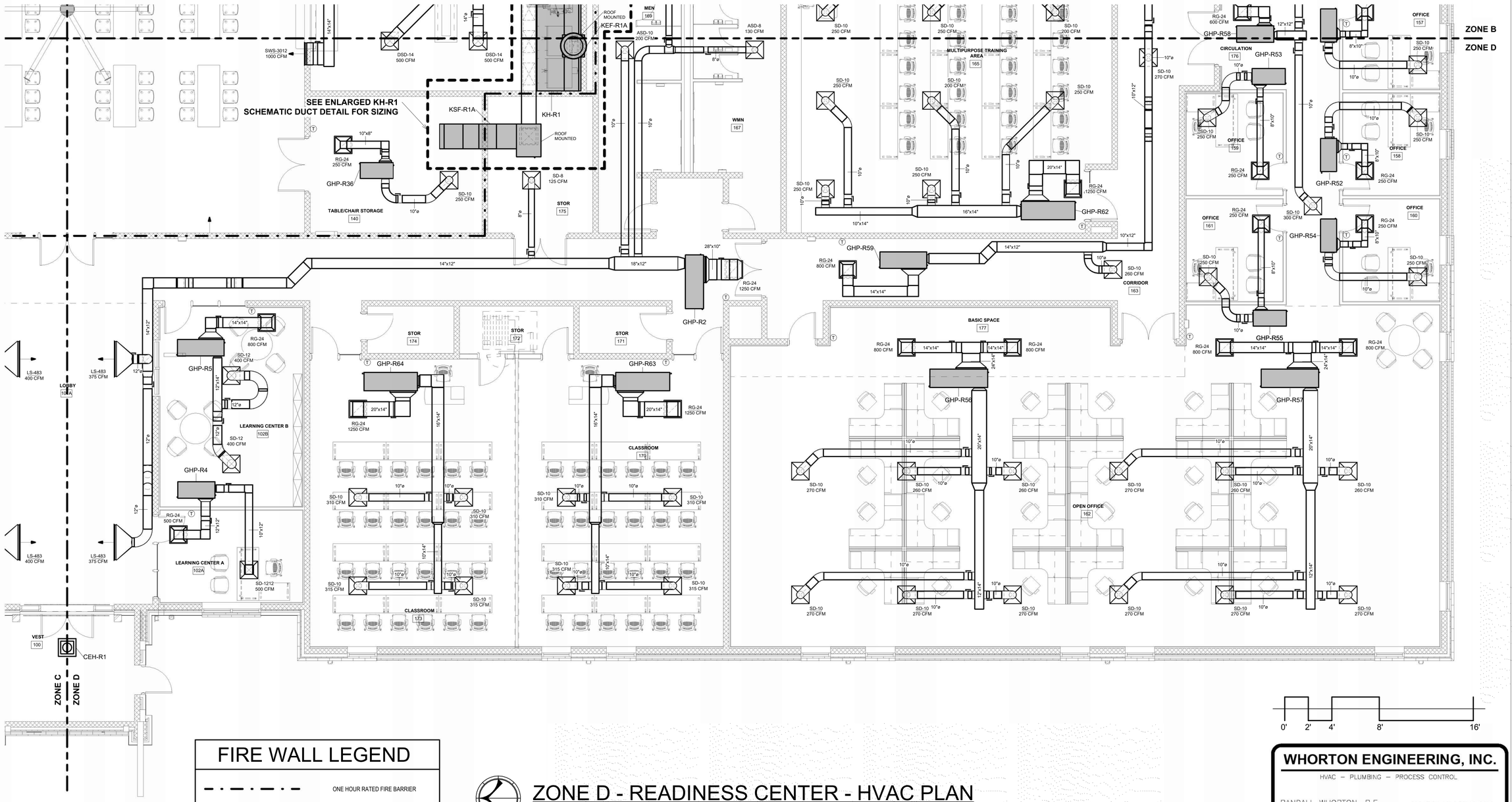

FIRE WALL LEGEND

ONE HOUR RATED FIRE BARRIER

ZONE D - READINESS CENTER - HVAC PLAN

3/16" = 1'-0"

0' 2' 4' 8' 16'

WHORTON ENGINEERING, INC.

HVAC – PLUMBING – PROCESS CONTROL

RANDALL WHORTON, P.E.
PHONE: (256) 820-9897

25 SUMMERALL GATE ROAD
ANNISTON, ALABAMA 36205

WHORTON ENGINEERING PROJECT NO. 22164

11-11-2024

S|S&L ARCHITECTS
Montgomery | Dothan | Auburn | Huntsville | Pensacola
WWW.SSLARCH.COM | 334.283.6603

Rev.	Description	Date

Job Number: 21112

AL ARNG IFB #: AC-25-B-0006-S

Date: NOVEMBER 1, 2024

Drawn By: RDW

Checked By: RDW

Project Title

HUNTSVILLE READINESS CENTER
5180 MOORES MILL ROAD
HUNTSVILLE AL, 35811

Sheet Title: ZONE D - READINESS CENTER - HVAC PLAN

Sheet Number: RM3.4

GENERAL NOTES:

1. ALL DIFFUSERS/GRILLE RUNOUTS SHALL INCLUDE SPIN-IN WITH DAMPER.
2. ALL OUTSIDE AIR RUNOUTS, EXHAUST, ETC. AND BRANCH DUCTS SHALL INCLUDE SPIN-IN WITH DAMPER
3. REFERENCE PLUMBING PLANS FOR CONDENSATE PIPING.
4. TEST AND BALANCE IS REQUIRED FOR ALL UNITS, DUCT, GRILLES, ETC. SHOWN ON PLANS. REFERENCE SPECIFICATIONS FOR ADDITIONAL INFORMATION.
5. ALL LOUVERS SHALL HAVE A PLENUM BOX. PLENUM BOX SHALL BE SIZED TO MATCH LOUVER DIMENSIONS. PLENUM BOX SHALL BE 18" DEEP.
6. MECHANICAL CONTRACTOR SHALL COORDINATE ROUTING OF REFRIGERANT LINES AND DUCTWORK WITH ALL OTHER TRADES.
7. COORDINATE FINAL LOCATION OF PORTABLE DEHUMIDIFIERS WITH ARCHITECT, PLUMBING, ELECTRICAL, AND GENERAL CONTRACTOR PRIOR TO INSTALLATION.

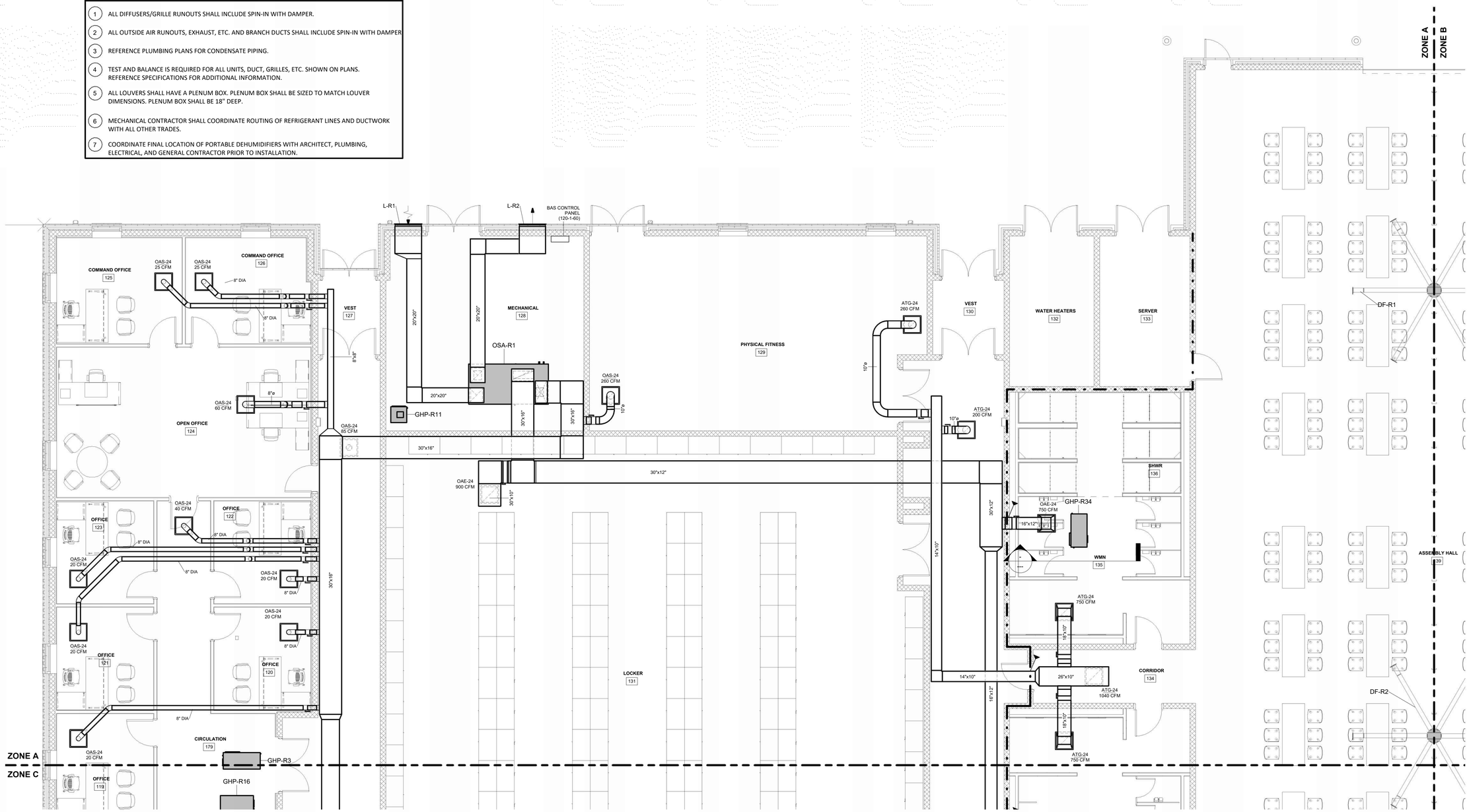

FIRE WALL LEGEND

ONE HOUR RATED FIRE BARRIER

ZONE A - READINESS CENTER - OUTSIDE AIR/EXHAUST HVAC PLAN

3/16" = 1'-0"

0' 2' 4' 8' 16'

WHORTON ENGINEERING, INC.

HVAC – PLUMBING – PROCESS CONTROL

RANDALL WHORTON, P.E.
PHONE: (256) 820-9897

25 SUMMERALL GATE ROAD
ANNISTON, ALABAMA 36205

WHORTON ENGINEERING PROJECT NO. 22164

ALABAMA REGISTERED PROFESSIONAL ENGINEER No.14192 RANDALL D. WHORTON

11-11-2024

S|S&L ARCHITECTS
Montgomery | Dothan | Auburn | Huntsville | Pensacola
WWW.SSLARCH.COM | 334.283.6603

Rev.	Description	Date

Job Number: 21112

AL ARNG IFB #: AC-25-B-0006-S

Date: NOVEMBER 1, 2024

Drawn By: RDW

Checked By: RDW

Project Title

HUNTSVILLE READINESS CENTER
5180 MOORE'S MILL ROAD
HUNTSVILLE AL, 35811

Sheet Title: ZONE A - READINESS CENTER - OUTSIDE AIR/EXHAUST HVAC PLAN

Sheet Number: RM3.5

GENERAL NOTES:

1. ALL DIFFUSERS/GRILLE RUNOUTS SHALL INCLUDE SPIN-IN WITH DAMPER.
2. ALL OUTSIDE AIR RUNOUTS, EXHAUST, ETC. AND BRANCH DUCTS SHALL INCLUDE SPIN-IN WITH DAMPER.
3. REFERENCE PLUMBING PLANS FOR CONDENSATE PIPING.
4. TEST AND BALANCE IS REQUIRED FOR ALL UNITS, DUCT, GRILLES, ETC. SHOWN ON PLANS. REFERENCE SPECIFICATIONS FOR ADDITIONAL INFORMATION.
5. ALL LOUVERS SHALL HAVE A PLENUM BOX. PLENUM BOX SHALL BE SIZED TO MATCH LOUVER DIMENSIONS. PLENUM BOX SHALL BE 18" DEEP.
6. MECHANICAL CONTRACTOR SHALL COORDINATE ROUTING OF REFRIGERANT LINES AND DUCTWORK WITH ALL OTHER TRADES.
7. COORDINATE FINAL LOCATION OF PORTABLE DEHUMIDIFIERS WITH ARCHITECT, PLUMBING, ELECTRICAL, AND GENERAL CONTRACTOR PRIOR TO INSTALLATION.

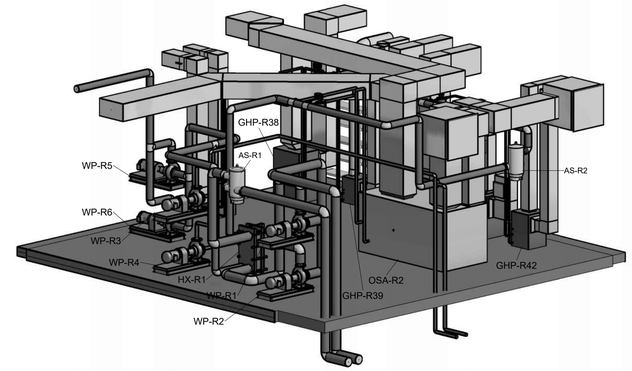

MECHANICAL-148 SCHEMATIC DETAIL

NOT TO SCALE

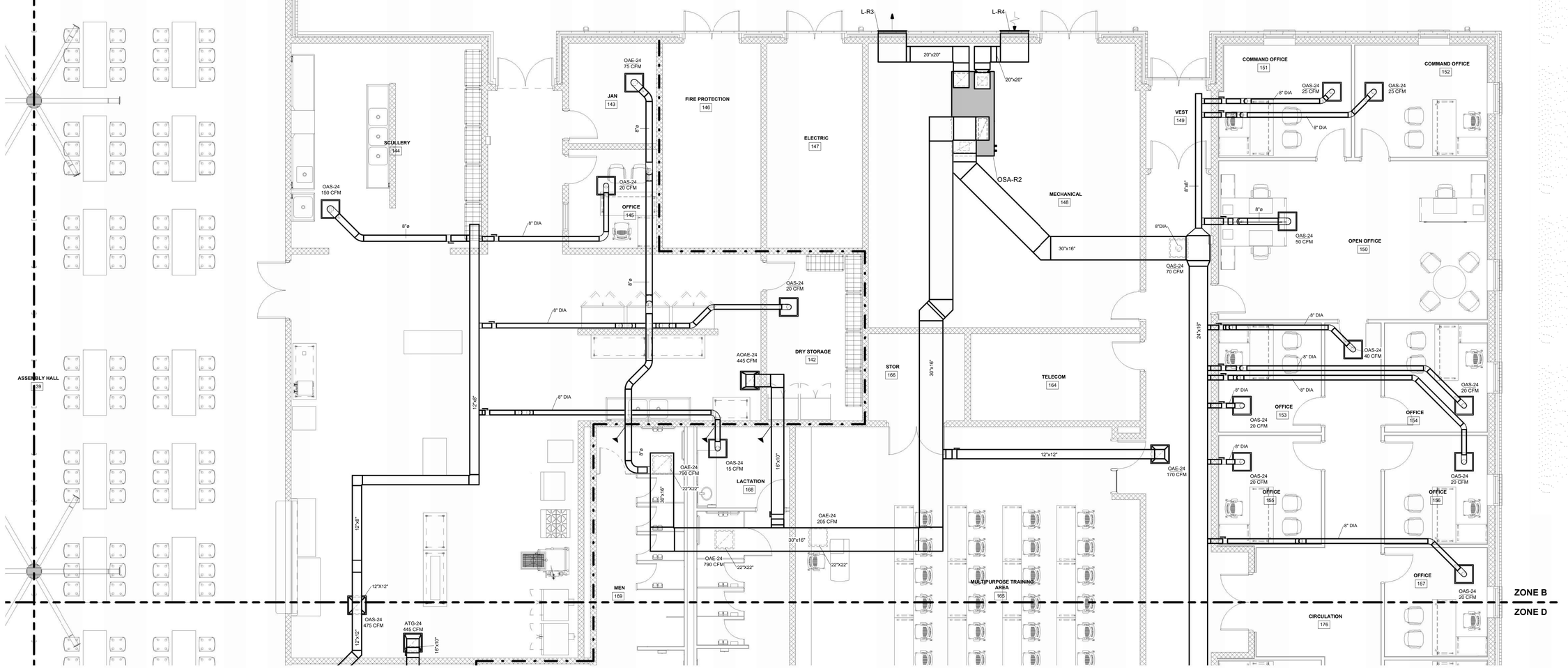

FIRE WALL LEGEND

ONE HOUR RATED FIRE BARRIER

ZONE B - READINESS CENTER - OUTSIDE AIR/EXHAUST HVAC PLAN

3/16" = 1'-0"

0' 2' 4' 8' 16'

WHORTON ENGINEERING, INC.

HVAC – PLUMBING – PROCESS CONTROL

RANDALL WHORTON, P.E.
PHONE: (256) 820-9897

25 SUMMERALL GATE ROAD
ANNISTON, ALABAMA 36205

WHORTON ENGINEERING PROJECT NO. 22164

S|S&L ARCHITECTS
Montgomery | Dothan | Auburn | Huntsville | Pensacola
WWW.SSLARCH.COM | 334.283.6603

Rev.	Description	Date

Job Number: 21112

AL ARNG IFB #: AC-25-B-0006-S

Date: NOVEMBER 1, 2024

Drawn By: RDW

Checked By: RDW

Project Title

HUNTSVILLE READINESS CENTER
5180 MOORE'S MILL ROAD
HUNTSVILLE AL, 35811

Sheet Title: ZONE B - READINESS CENTER - OUTSIDE AIR/EXHAUST HVAC PLAN

Sheet Number: RM3.6

STATE OF ALABAMA
No. 14192
PROFESSIONAL ENGINEER
RANDALL D. WHORTON

11-11-2024

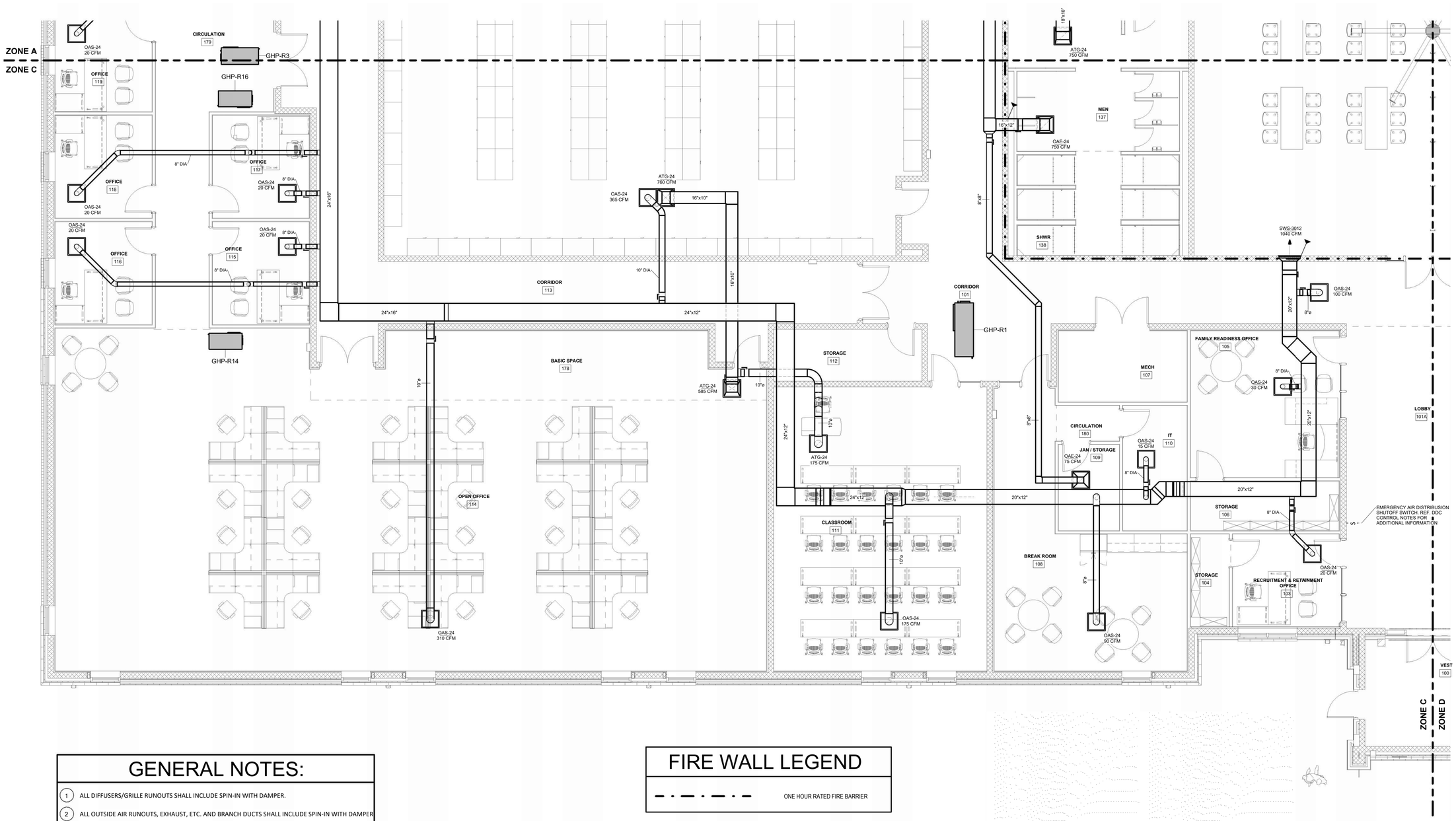

GENERAL NOTES:

1. ALL DIFFUSERS/GRILLE RUNOUTS SHALL INCLUDE SPIN-IN WITH DAMPER.
2. ALL OUTSIDE AIR RUNOUTS, EXHAUST, ETC. AND BRANCH DUCTS SHALL INCLUDE SPIN-IN WITH DAMPER
3. REFERENCE PLUMBING PLANS FOR CONDENSATE PIPING.
4. TEST AND BALANCE IS REQUIRED FOR ALL UNITS, DUCT, GRILLES, ETC. SHOWN ON PLANS. REFERENCE SPECIFICATIONS FOR ADDITIONAL INFORMATION.
5. ALL LOUVERS SHALL HAVE A PLENUM BOX. PLENUM BOX SHALL BE SIZED TO MATCH LOUVER DIMENSIONS. PLENUM BOX SHALL BE 18" DEEP.
6. MECHANICAL CONTRACTOR SHALL COORDINATE ROUTING OF REFRIGERANT LINES AND DUCTWORK WITH ALL OTHER TRADES.
7. COORDINATE FINAL LOCATION OF PORTABLE DEHUMIDIFIERS WITH ARCHITECT, PLUMBING, ELECTRICAL, AND GENERAL CONTRACTOR PRIOR TO INSTALLATION.

FIRE WALL LEGEND

ONE HOUR RATED FIRE BARRIER

ZONE C - READINESS CENTER - OUTSIDE AIR/EXHAUST HVAC PLAN

3/16" = 1'-0"

0' 2' 4' 8' 16'

WHORTON ENGINEERING, INC.

HVAC – PLUMBING – PROCESS CONTROL

RANDALL WHORTON, P.E.
PHONE: (256) 820-9897

25 SUMMERALL GATE ROAD
ANNISTON, ALABAMA 36205

WHORTON ENGINEERING PROJECT NO. 22164

ALABAMA LICENSED PROFESSIONAL ENGINEER No.14192 RANDALL D. WHORTON

11-11-2024

S|S&L ARCHITECTS
Montgomery | Dothan | Auburn | Huntsville | Pensacola
WWW.SSLARCH.COM | 334.283.6603

Rev.	Description	Date

Job Number: 21112

AL ARNG IFB #: AC-25-B-0006-S

Date: NOVEMBER 1, 2024

Drawn By: RDW

Checked By: RDW

Project Title

HUNTSVILLE READINESS CENTER
5180 MOORE'S MILL ROAD
HUNTSVILLE AL, 35811

Sheet Title: ZONE C - READINESS CENTER - OUTSIDE AIR/EXHAUST HVAC PLAN

Sheet Number: RM3.7

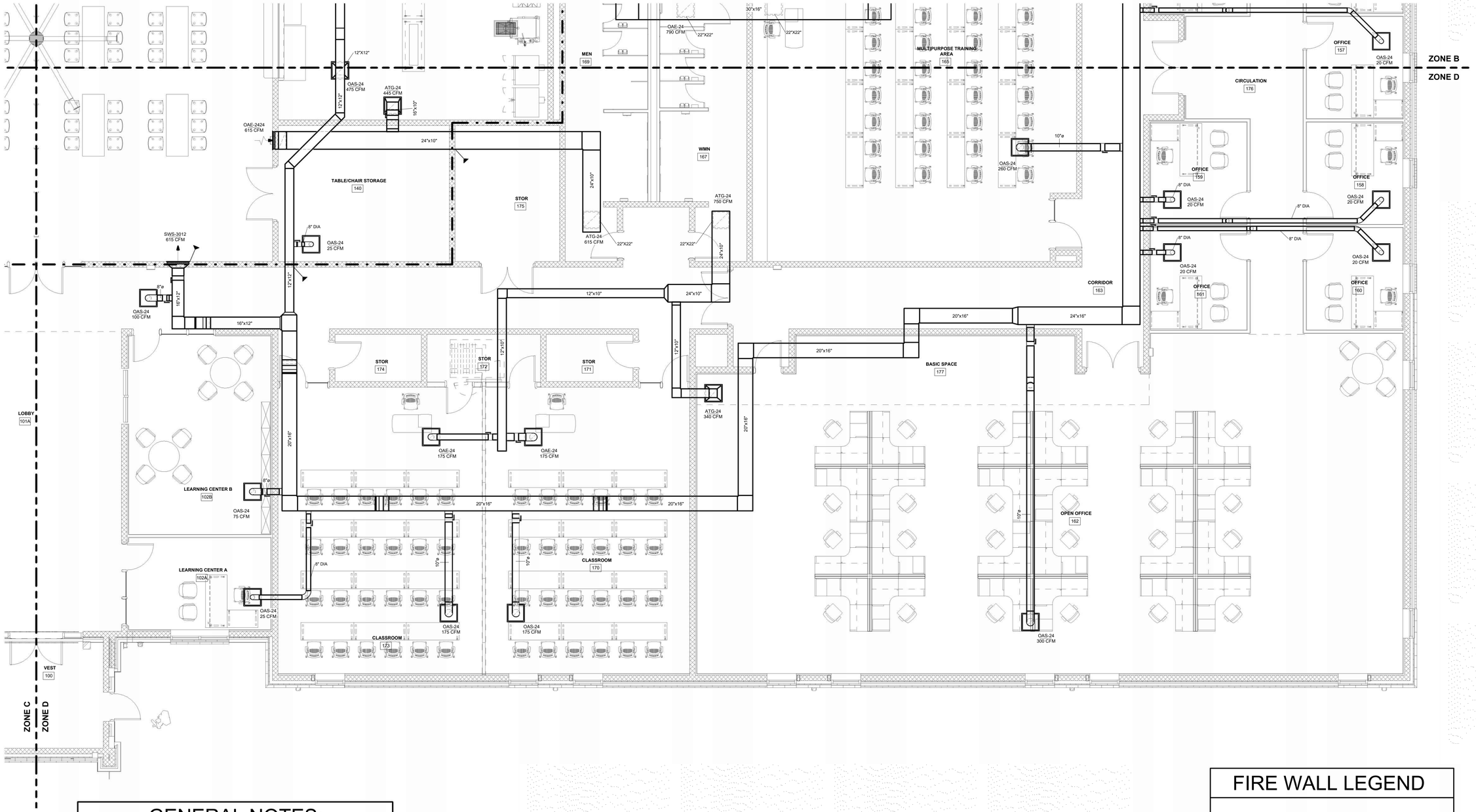

GENERAL NOTES:

1. ALL DIFFUSERS/GRILLE RUNOUTS SHALL INCLUDE SPIN-IN WITH DAMPER.
2. ALL OUTSIDE AIR RUNOUTS, EXHAUST, ETC. AND BRANCH DUCTS SHALL INCLUDE SPIN-IN WITH DAMPER
3. REFERENCE PLUMBING PLANS FOR CONDENSATE PIPING.
4. TEST AND BALANCE IS REQUIRED FOR ALL UNITS, DUCT, GRILLES, ETC. SHOWN ON PLANS. REFERENCE SPECIFICATIONS FOR ADDITIONAL INFORMATION.
5. ALL LOUVERS SHALL HAVE A PLENUM BOX. PLENUM BOX SHALL BE SIZED TO MATCH LOUVER DIMENSIONS. PLENUM BOX SHALL BE 18" DEEP.
6. MECHANICAL CONTRACTOR SHALL COORDINATE ROUTING OF REFRIGERANT LINES AND DUCTWORK WITH ALL OTHER TRADES.
7. COORDINATE FINAL LOCATION OF PORTABLE DEHUMIDIFIERS WITH ARCHITECT, PLUMBING, ELECTRICAL, AND GENERAL CONTRACTOR PRIOR TO INSTALLATION.

FIRE WALL LEGEND

ONE HOUR RATED FIRE BARRIER

0' 2' 4' 8' 16'

ZONE D - READINESS CENTER - OUTSIDE AIR/EXHAUST HVAC PLAN

3/16" = 1'-0"

WHORTON ENGINEERING, INC.

HVAC – PLUMBING – PROCESS CONTROL

RANDALL WHORTON, P.E.
PHONE: (256) 820-9897

25 SUMMERALL GATE ROAD
ANNISTON, ALABAMA 36205

WHORTON ENGINEERING PROJECT NO. 22164

S|S&L ARCHITECTS
Montgomery | Dothan | Auburn | Huntsville | Pensacola
WWW.SSLARCH.COM | 334.263.6603

Rev.	Description	Date

Job Number: 21112

AL ARNG IFB #: AC-25-B-0006-S

Date: NOVEMBER 1, 2024

Drawn By: RDW

Checked By: RDW

Project Title

HUNTSVILLE READINESS CENTER
5180 MOORE'S MILL ROAD
HUNTSVILLE AL, 35811

Sheet Title: ZONE D - READINESS CENTER - OUTSIDE AIR/EXHAUST HVAC PLAN

Sheet Number: RM3.8

STATE OF ALABAMA LICENSED No.14192 PROFESSIONAL ENGINEER RANDALL D. WHORTON

11-11-2024

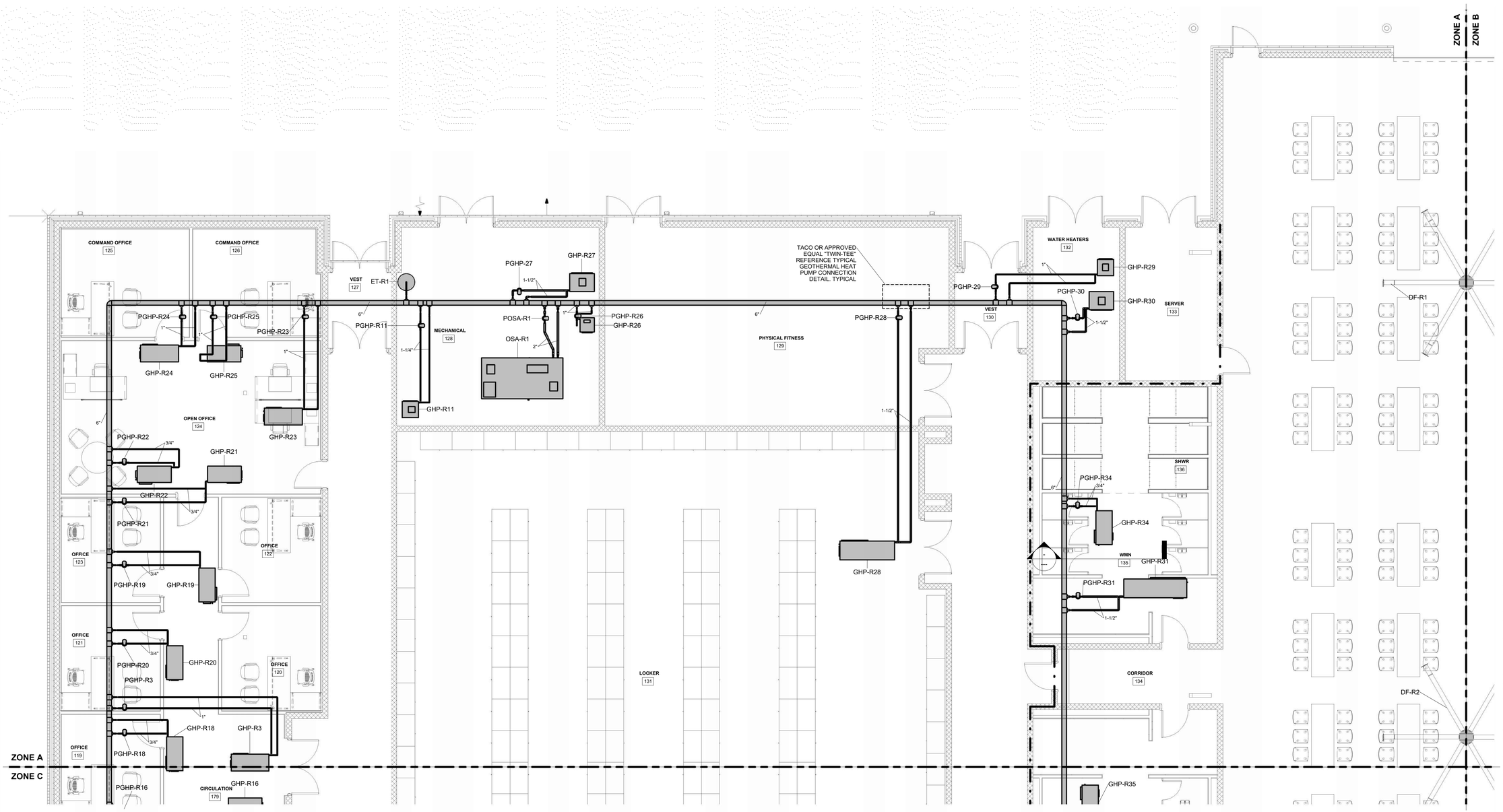

FIRE WALL LEGEND

- · — · — · -	ONE HOUR RATED FIRE BARRIER

ZONE A - READINESS CENTER HVAC HYDRONIC PIPING PLAN

3/16" = 1'-0"

0' 2' 4' 8' 16'

WHORTON ENGINEERING, INC.

HVAC – PLUMBING – PROCESS CONTROL

RANDALL WHORTON, P.E.
PHONE: (256) 820-9897

25 SUMMERALL GATE ROAD
ANNISTON, ALABAMA 36205

WHORTON ENGINEERING PROJECT NO. 22164

ALABAMA REGISTERED PROFESSIONAL ENGINEER No.14192 RANDALL D. WHORTON

11-11-2024

S|S&L ARCHITECTS
Montgomery | Dothan | Auburn | Huntsville | Pensacola
WWW.SSLARCH.COM | 334.283.6603

Rev.	Description	Date

Job Number: 21112

AL ARNG IFB #: AC-25-B-0006-S

Date: NOVEMBER 1, 2024

Drawn By: RDW

Checked By: RDW

Project Title

HUNTSVILLE READINESS CENTER
5180 MOORE'S MILL ROAD
HUNTSVILLE AL, 35811

Sheet Title
ZONE A -READINESS CENTER - HVAC HYDRONIC PIPING PLAN

Sheet Number
RM4.1

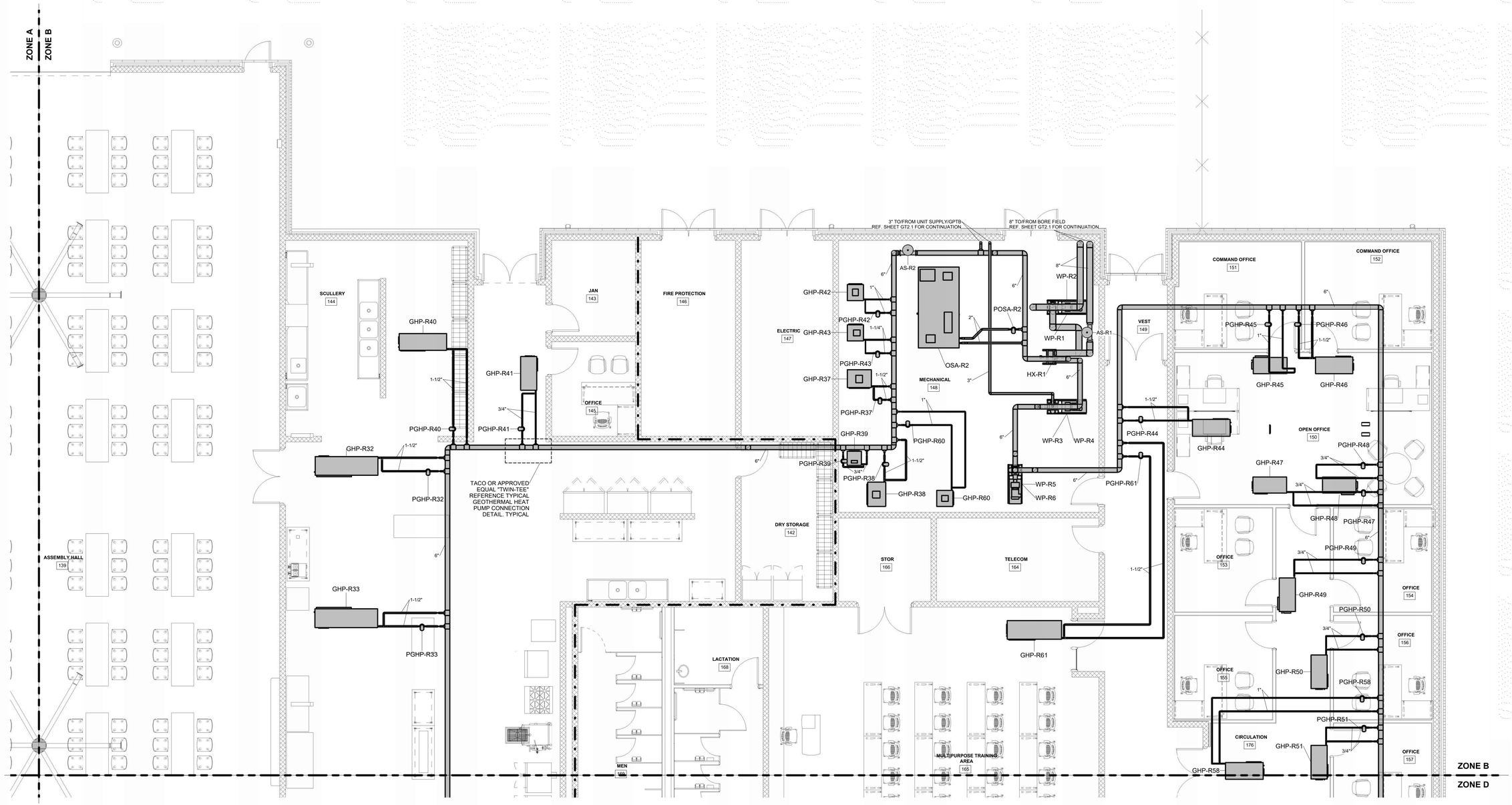

FIRE WALL LEGEND

- · — · — · -	ONE HOUR RATED FIRE BARRIER

ZONE B - READINESS CENTER HVAC HYDRONIC PIPING PLAN

3/16" = 1'-0"

0' 2' 4' 8' 16'

WHORTON ENGINEERING, INC.

HVAC – PLUMBING – PROCESS CONTROL

RANDALL WHORTON, P.E.
PHONE: (256) 820-9897

25 SUMMERALL GATE ROAD
ANNISTON, ALABAMA 36205

WHORTON ENGINEERING PROJECT NO. 22164

STATE OF ALABAMA LICENSED PROFESSIONAL ENGINEER No.14192 RANDALL D. WHORTON

11-11-2024

S|S&L ARCHITECTS
Montgomery | Dothan | Auburn | Huntsville | Pensacola
WWW.SSLARCH.COM | 334.283.6603

Rev.	Description	Date

Job Number: 21112

AL ARNG IFB #: AC-25-B-0006-S

Date: NOVEMBER 1, 2024

Drawn By: RDW

Checked By: RDW

Project Title

HUNTSVILLE READINESS CENTER
5180 MOORE'S MILL ROAD
HUNTSVILLE AL, 35811

Sheet Title
ZONE B -READINESS CENTER - HVAC HYDRONIC PIPING PLAN

Sheet Number
RM4.2

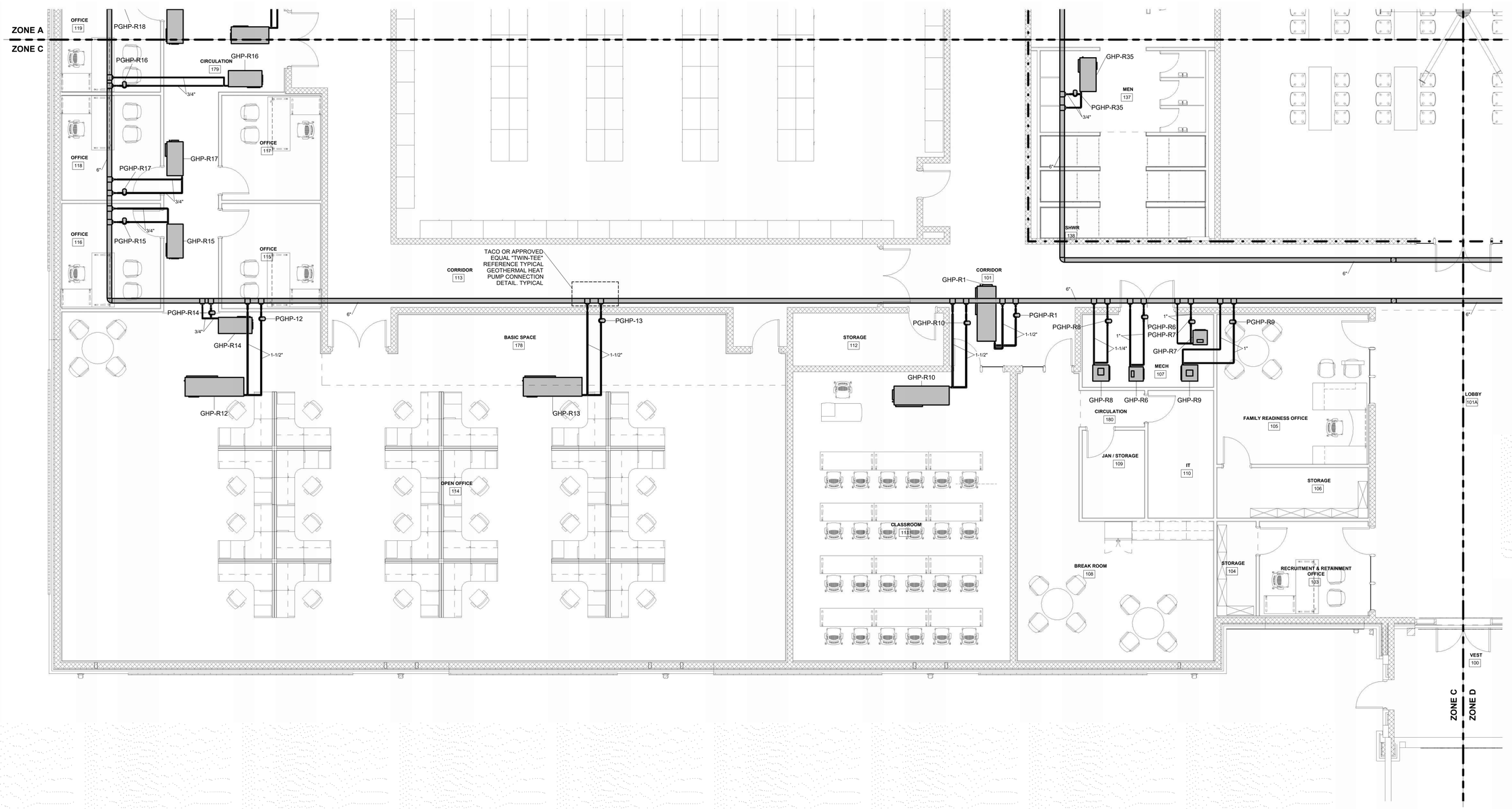

FIRE WALL LEGEND

ONE HOUR RATED FIRE BARRIER

ZONE C - READINESS CENTER HVAC HYDRONIC PIPING PLAN

3/16" = 1'-0"

WHORTON ENGINEERING, INC.

HVAC – PLUMBING – PROCESS CONTROL

RANDALL WHORTON, P.E.
PHONE: (256) 820-9897

25 SUMMERALL GATE ROAD
ANNISTON, ALABAMA 36205

WHORTON ENGINEERING PROJECT NO. 22164

ALABAMA REGISTERED PROFESSIONAL ENGINEER No.14192 RANDALL D. WHORTON

11-11-2024

S|S&L ARCHITECTS
Montgomery | Dothan | Auburn | Huntsville | Pensacola
WWW.SSLARCH.COM | 334.283.6603

Rev.	Description	Date

Job Number: 21112

AL ARNG IFB #: AC-25-B-0006-S

Date: NOVEMBER 1, 2024

Drawn By: RDW

Checked By: RDW

Project Title

HUNTSVILLE READINESS CENTER
5180 MOORE'S MILL ROAD
HUNTSVILLE AL, 35811

Sheet Title
ZONE C -READINESS CENTER - HVAC HYDRONIC PIPING PLAN

Sheet Number
RM4.3

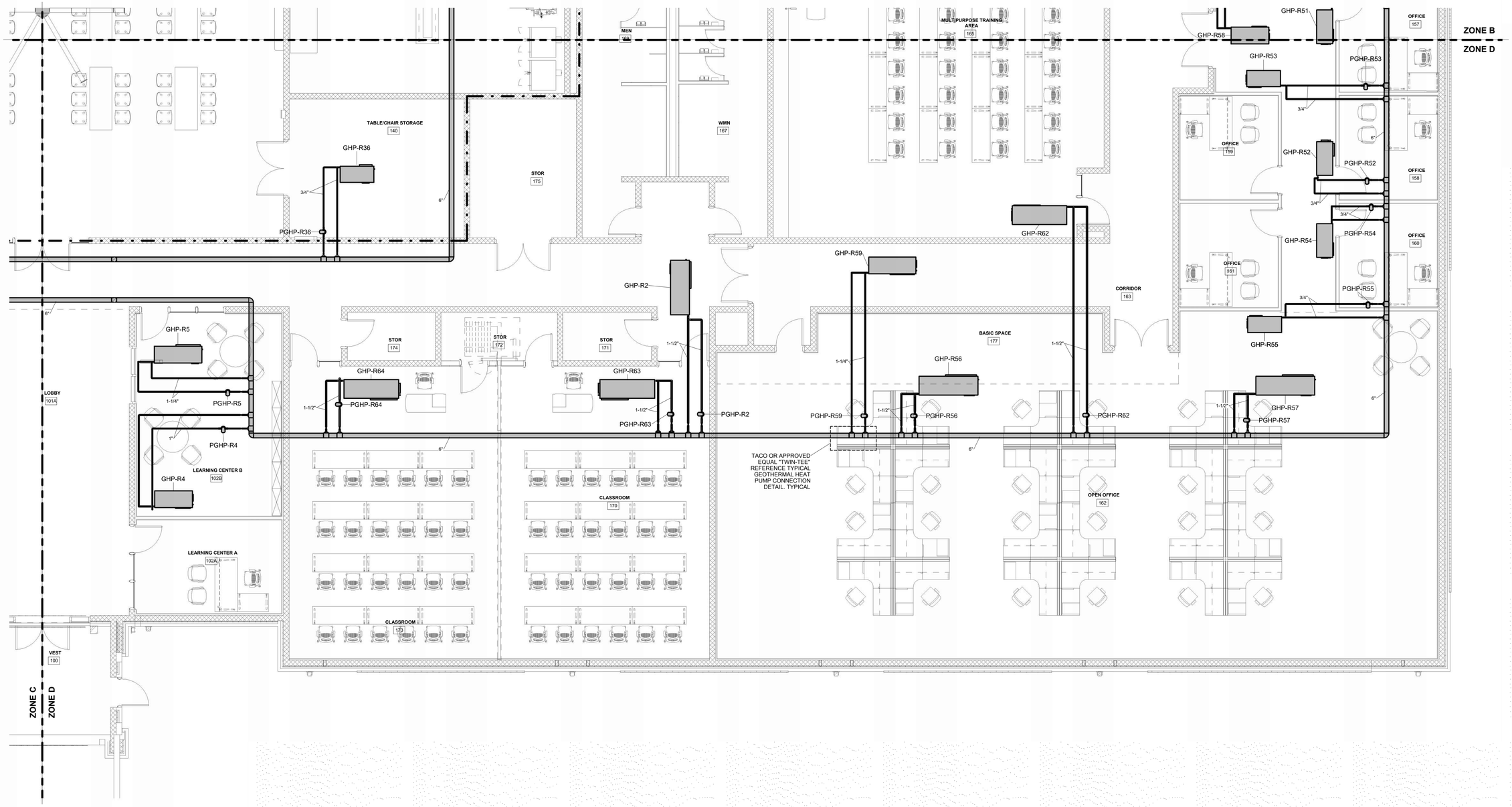

0' 2' 4' 8' 16'

FIRE WALL LEGEND	
— · — · — · —	ONE HOUR RATED FIRE BARRIER

ZONE D - READINESS CENTER HVAC HYDRONIC PIPING PLAN

3/16" = 1'-0"

WHORTON ENGINEERING, INC.

HVAC – PLUMBING – PROCESS CONTROL

RANDALL WHORTON, P.E.
PHONE: (256) 820-9897

25 SUMMERALL GATE ROAD
ANNISTON, ALABAMA 36205

WHORTON ENGINEERING PROJECT NO. 22164

SS&L ARCHITECTS
Montgomery | Dothan | Auburn | Huntsville | Pensacola
WWW.SSLARCH.COM | 334.265.6009

Rev.	Description	Date

Job Number: 21112
AL ARNG IFB #: AC-25-B-0006-S
Date: NOVEMBER 1, 2024
Drawn By: RDW
Checked By: RDW
Project Title

HUNTSVILLE READINESS CENTER
5180 MOORE'S MILL ROAD
HUNTSVILLE AL, 35811

Sheet Title
ZONE D -READINESS CENTER - HVAC HYDRONIC PIPING PLAN

Sheet Number
RM4.4

ALABAMA REGISTERED PROFESSIONAL ENGINEER No.14192 RANDALL D. WHORTON
11-11-2024

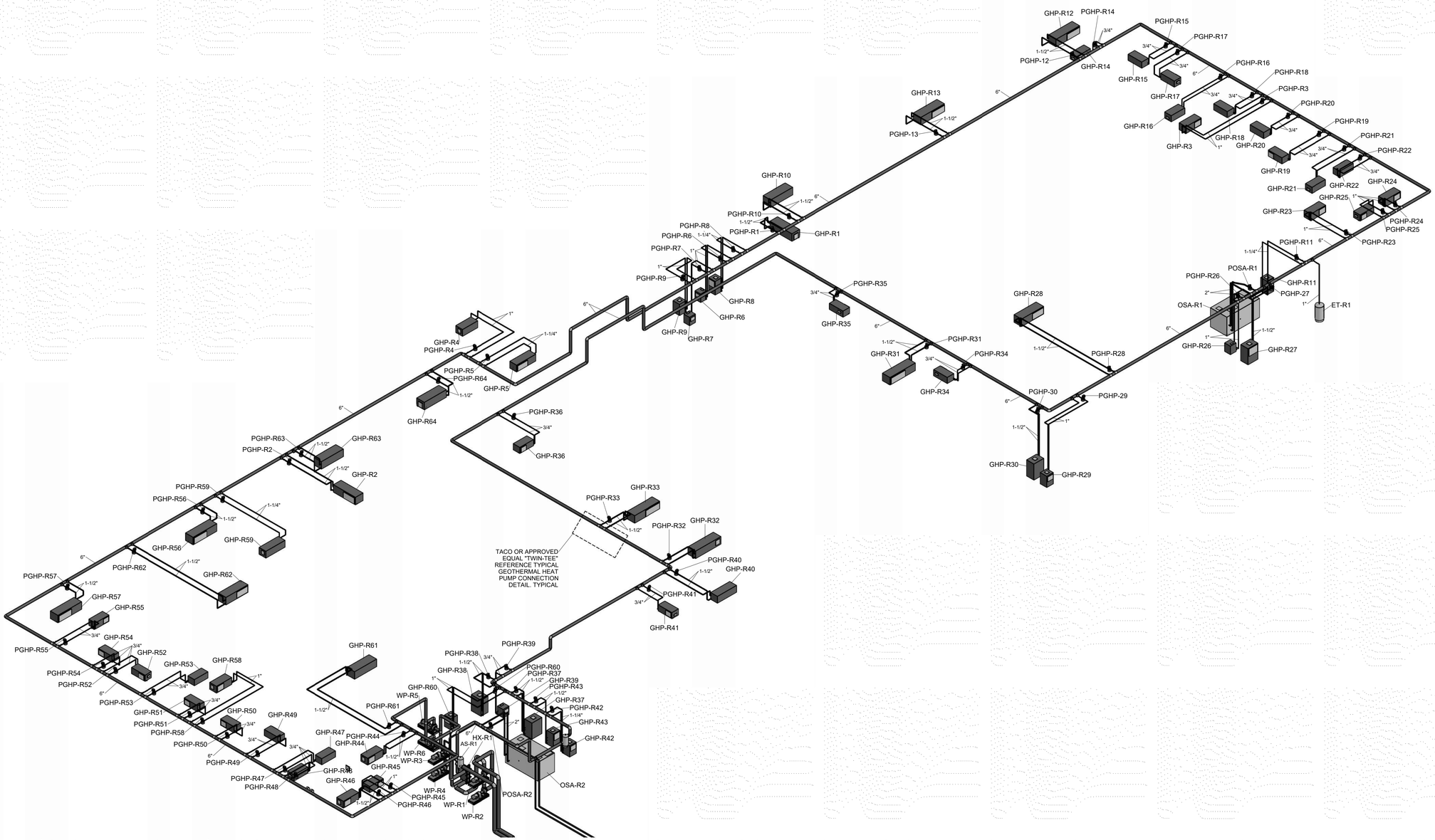

READINESS CENTER - HVAC HYDRONIC PIPING RISER DIAGRAM

WHORTON ENGINEERING, INC.

HVAC – PLUMBING – PROCESS CONTROL

RANDALL WHORTON, P.E.
PHONE: (256) 820-9897

25 SUMMERALL GATE ROAD
ANNISTON, ALABAMA 36205

WHORTON ENGINEERING PROJECT NO. 22164

STATE OF ALABAMA
No.14192
PROFESSIONAL ENGINEER
RANDALL D. WHORTON
11-05-2024

S|S&L ARCHITECTS
Montgomery | Dothan | Auburn | Huntsville | Pensacola
WWW.SSLARCH.COM | 334.283.6603

Rev.	Description	Date

Job Number
21112

AL ARNG IFB #
AC-25-B-0006-S

Date
NOVEMBER 1, 2024

Drawn By
RDW

Checked By
RDW

Project Title

HUNTSVILLE READINESS CENTER
5180 MOORE'S MILL ROAD
HUNTSVILLE AL, 35811

Sheet Title
READINESS CENTER - HVAC HYDRONIC PIPING RISER DIAGRAM

Sheet Number
RM4.5

UNIT SUPPLY / GPTB HVAC NOTES

1. ALL DUCT DIMENSIONS SHOWN ARE NET INTERNAL.
2. INSTALL OPPOSED BLADE BALANCING DAMPERS IN ALL NEW DIFFUSERS AND GRILLES.
3. THESE DRAWINGS ARE SCHEMATIC IN NATURE AND ARE NOT INTENDED TO SHOW ALL POSSIBLE CONDITIONS. IT IS INTENDED THAT A COMPLETE HVAC SYSTEM BE PROVIDED WITH ALL NECESSARY EQUIPMENT, APPURTENANCES, AND CONTROLS, COMPLETELY COORDINATED WITH ALL DISCIPLINES. ALL REQUIREMENTS OF THESE DOCUMENTS SHALL BE STRICTLY CONFORMED WITH. ANY ITEMS AND LABOR REQUIRED FOR A COMPLETE HVAC SYSTEM IN ACCORDANCE WITH ALL APPLICABLE CODES, STANDARDS, AND THESE CONTRACT DOCUMENTS SHALL BE FURNISHED WITHOUT INCURRING ANY ADDITIONAL COST TO THE CONTRACT. CAREFULLY REVIEW ALL CONTRACT DOCUMENTS AND THE DESIGN OF OTHER TRADES BEFORE PREPARING SHOP DRAWINGS.
4. COORDINATE DUCTWORK AND PIPING WITH STRUCTURAL, PLUMBING, FIRE PROTECTION AND ELECTRICAL. MAKE OFFSETS AND TRANSITIONS AS REQUIRED TO CLEAR STRUCTURAL MEMBERS, ETC. COORDINATE WITH OTHER TRADES WITHOUT ADDITIONAL EXPENSE TO THE OWNER.
5. REFER TO ARCHITECTURAL CEILING PLANS FOR EXACT LOCATION OF ALL CEILING MOUNTED AIR DISTRIBUTION DEVICES; COORDINATE EXACT LOCATION OF GRILLES, REGISTERS, AND DIFFUSERS WITH ARCHITECTURAL AND INTERIOR REFLECTED CEILING PLANS AND LIGHTING FIXTURES. FOR PARTICULAR ITEMS NOT SHOWN ON THE ARCHITECTURAL REFLECTED CEILING PLAN, PREPARE A DRAWING AND PRESENT IT TO THE ARCHITECT FOR REVIEW AND/OR APPROVAL.
6. COORDINATE ALL ROOF AND SLAB PENETRATIONS WITH THE STRUCTURAL ENGINEER. TRANSITIONS RECTANGULAR DUCTWORK ON THE BOTTOM AND THE SIDES. MAINTAIN DUCTWORK LEVEL AS HIGH AS POSSIBLE UNLESS NOTED OTHERWISE.
7. THE HVAC CONTRACTOR IS TO REVIEW THE ENTIRE SET OF PLANS FOR COORDINATION WITH OTHER TRADES. SHOP DRAWINGS WITH ALL TRADES COORDINATED WILL BE REQUIRED.
8. THE HVAC CONTRACTOR SHALL REVIEW THE ARCHITECTURAL PLANS FOR FINAL LOCATIONS OF ALL RATED WALLS, CEILINGS, FLOORS, ETC. THE HVAC CONTRACTOR SHALL FURNISH AND INSTALL FIRE OR FIRE/SMOKE DAMPERS IN ALL RATED LOCATIONS WHETHER SHOWN ON THE MECHANICAL PLANS OR NOT.
9. CONTRACTOR SHALL COORDINATE VOLTAGE AND PHASE OF EACH PIECE OF EQUIPMENT WITH THE ELECTRICAL CONTRACTOR PRIOR TO ORDERING.
10. ALL THREE PHASE EQUIPMENT SHALL BE EQUIPPED WITH PHASE LOSS PROTECTION.
11. ALL MOTOR STARTERS SHALL BE FURNISHED BY THE MECHANICAL CONTRACTOR.
12. CONTRACTOR TO COORDINATE ALL CEILING TYPES WITH DIFFUSERS. ALL DIFFUSERS IN GYPSUM CEILING SHALL INCLUDE PLASTER FRAME.
13. ALL DISTRIBUTION DEVICES SHALL HAVE FACE OPERABLE DAMPERS. ALL DIFFUSER RUNOUTS SHALL INCLUDE SPIN-IN WITH DAMPER IN ROUND DUCTS.
14. INSULATE TOP SIDE/BACK OF ALL DIFFUSERS/GRILLES, ETC.
15. CONDENSATE DRAIN PIPING SHALL BE SLOPED A MINIMUM OF 1/8" PER FOOT AND SHALL BE SIZED PER TABLE 307.2.2 IN THE 2021 INTERNATIONAL MECHANICAL CODE UNLESS SHOWN LARGER ON PLANS.
16. ALL 3/4" AND 1" CONDENSATE DRAIN TRAPS SHALL BE EZ-TRAP OR APPROVED EQUAL WITH FLOAT SWITCH.
17. INSTALL AUXILIARY DRAIN PAN UNDER ALL UNITS MOUNTED IN ATTIC, ABOVE CEILINGS, ETC. INSTALL WET SWITCH FOR UNIT SHUT DOWN IN AUXILIARY DRAIN PAN – DIVERSITECH "WET SWITCH" CONDENSATE DETECTION SWITCH OR APPROVED EQUAL.
18. REFERENCE PLUMBING PLANS FOR CONDENSATE PIPING. IF CONDENSATE DRAINS ARE NOT SHOWN ON THE PLUMBING PLANS, ALL CONDENSATE DRAINS SHALL BE FURNISHED AND INSTALLED BY THE HVAC CONTRACTOR.
19. VERIFY WITH THE ARCHITECTURAL DRAWINGS, SIZE, LOCATION, AND MOUNTING HEIGHT OF ALL LOUVERS. VERIFY COLOR AND FINISH WITH OWNER.
20. ALL UNUSED PORTION OF LOUVERS SHALL BE CAPPED OFF WITH 1" INSULATED ALUMINUM AND SEALED AIR/WATER TIGHT.
21. UNLESS OTHERWISE NOTED, UNITS SHALL INCLUDE A HONEYWELL SPYDER PUL6438SR (OR EQUAL) PROGRAMMABLE CONTROLLER WITH HONEYWELL SYLK I/O MODULES OR EQUAL) AS REQUIRED TO PROVIDE THE CONTROL POINTS AS LISTED IN THE POINTS MATRIX. WALL MODULES SHALL BE COMMUNICATING HONEYWELL TR-71H MODULES (OR EQUAL) FOR TEMPERATURE/HUMIDITY CONTROL AND TR-40-CO2 (OR EQUAL) FOR CO2 CONTROL WHERE A CO2 SENSOR IS SPECIFIED.
22. ALL THERMOSTATS TO BE MOUNTED 4'-0" A.F.F. TO HIGHEST OPERABLE CONTROL UNLESS OTHERWISE INDICATED.
23. ALL REFRIGERANT LINES SHALL BE SIZED/APPROVED BY THE EQUIPMENT VENDOR/COMPRESSOR MANUFACTURER. ALL REFRIGERANT LINES SHALL BE INSTALLED USING INSULATED LINE CLAMPS.
24. PAINT ALL EXTERIOR EXPOSED ARMAFLEX INSULATION FOR UV PROTECTION.
25. PORTIONS OF DUCTWORK VISIBLE THROUGH GRILLES, REGISTERS, AND DIFFUSERS IN FINISHED AREAS SHALL BE PAINTED FLAT BLACK.
26. FLEXIBLE DUCT (SUPPLY RUNOUTS ONLY) SHALL NOT EXCEED 6'-0" IN LENGTH.
27. DUCTWORK SHALL BE INSULATED IN ACCORDANCE WITH THE FOLLOWING SCHEDULE:
    - RECTANGULAR SUPPLY: 1" INTERNAL
    - ROUND SUPPLY: 1-1/2" EXTERNAL
    - FLEXIBLE SUPPLY: 1" PRE INSULATED
    - RECTANGULAR RETURN: 1" INTERNAL
    - OSA/EXHAUST: 1-1/2" EXTERNAL
28. DUCTWORK SHALL BE GALVANIZED AND INSTALLED IN ACCORDANCE WITH SMACNA STANDARDS.
29. LABEL ALL DUCTS WITH TYPE (SUPPLY, RETURN, ETC.) AND ARROWS INDICATING DIRECTION OF AIR FLOW. LABELS SHALL BE EVERY SIX FEET AND AT EACH CHANGE OF DIRECTION (T'S, ELBOWS, ETC.)
30. ROUND DUCT SHALL BE INSULATED WITH DUCT WRAP EQUAL TO CERTAINTEED SOFT TOUCH DUCT WRAP WITH FSK VAPOR RETARDER FACING TYPE 75 WITH MINIMUM INSTALLED R-VALUE 4.2. ROUND DUCTS LOCATED WITHIN THE ATTIC SHALL BE INSULATED WITH DUCT WRAP EQUAL TO CERTAINTEED SOFT TOUCH DUCT WRAP WITH FSK VAPOR RETARDER FACING TYPE 100 WITH MINIMUM INSTALLED R-VALUE 6.0
31. ALL OPEN ENDED DUCT SHALL BE CAPPED WITH 1/2"X1/2" WIRE MESH.
32. ALL EXPOSED DUCT SHALL BE INSULATED INTERNALLY WITH 1" DUCT LINER EQUAL TO CERTAINTEED TG2 DUCT LINER WITH MINIMUM INSTALLED R-VALUE 4.0.
33. ALL EXPOSED DUCT SHALL BE PAINTED. DUCT SHALL BE "PAINT GRIP". COORDINATE PAINT COLOR WITH OWNER.
34. DUCT LINER FOR RECTANGULAR DUCTS SHALL BE EQUAL TO CERTAINTEED TG2 DUCT LINER WITH A MINIMUM R-VALUE OF 4.0. RECTANGULAR DUCTS LOCATED WITHIN THE ATTIC SHALL BE LINED WITH DUCT LINER EQUAL TO CERTAINTEED TG2 DUCT LINER WITH A MINIMUM R-VALUE OF 4.0 AND WRAPPED EXTERNALLY WITH DUCT WRAP EQUAL TO CERTAINTEED SOFT TOUCH DUCT WRAP WITH FSK VAPOR RETARDER FACING TYPE 75 WITH A MINIMUM INSTALLED R-VALUE OF 4.2.
35. WARRANTIES SHALL BEGIN AT FINAL ACCEPTANCE. ALL COMPRESSORS SHALL INCLUDE MIN. OF FIVE YEAR WARRANTY. ONE YEAR WARRANTY FOR LABOR, PARTS, UNITS, ETC. IS REQUIRED FOR ALL EQUIPMENT. ADDITIONALLY CONTRACTOR IS RESPONSIBLE FOR ALL PREVENTATIVE MAINTENANCE AND ROUTINE SERVICE ON INSTALLED EQUIPMENT FOR THE ONE YEAR WARRANTY PERIOD IN ORDER TO MAINTAIN ALL FACTORY/MANUFACTURER WARRANTIES.
36. INSTALL ANGLE COVER OVER CONDENSATE LINES, REFRIGERANT LINES, ETC. THAT CROSS MEZZANINE FLOOR WHERE TRIPPING MIGHT BE A HAZARD. PRIME AND PAINT ANGLE COVER SAFETY YELLOW COLOR.
37. CONTRACTOR SHALL ANCHOR OUTDOOR UNITS TO CONCRETE PAD IN ACCORDANCE WITH MANUFACTURER'S RECOMMENDATION, WIND LOAD REQUIREMENTS, AND AS PER PLANS/SPECIFICATIONS. COORDINATE CONCRETE PAD SIZE, UNIT CLEARANCES, ETC. WITH STRUCTURAL AND ARCHITECTURAL PLANS, FRAMING, ETC.
38. THE CONTRACTOR SHALL INSTALL ANY CURB-MOUNTED EQUIPMENT IN SUCH A WAY THAT NO WATER LEAKAGE IS INTRODUCED INTO THE BUILDING.
39. ALL INDOOR AND OUTDOOR UNITS SHALL BE LOCATED SO THAT MAINTENANCE CLEARANCES IN ACCORDANCE WITH MANUFACTURER'S RECOMMENDATION AND AS PER PLANS/SPECIFICATIONS ARE MAINTAINED. COORDINATE MAINTENANCE CLEARANCES WITH STRUCTURAL AND ARCHITECTURAL PLANS, FRAMING, ETC.
40. VAULT AREA: INSTALL SECURITY BAR GRATE IN ALL OPENINGS 6"X6" OR GREATER. REFERENCE BAR GRATE DETAIL ON ARCHITECTURAL SECURITY DETAILS.
41. ALL COLOR/FINISH SELECTIONS SHALL BE MADE BY OWNER.
42. EXHAUST FAN CONTROL RELAYS SHALL BE WIRED TO THE NORMALLY CLOSED CONTACTS TO ALLOW THE FANS TO OPERATE IN THE EVENT THAT THE DDC CONTROLS ARE OFFLINE. EXHAUST FANS SHALL BE CONTROLLED BY THE BUILDING SCHEDULE.
43. COORDINATE DDC CONTROLLER TERMINAL ASSIGNMENTS WITH AANG DDC STANDARDS AND PRACTICES.
44. CARBON MONOXIDE DETECTORS SHALL BE MACURCO MODEL CM-6 (OR APPROVED EQUAL).

UNIT SUPPLY / GPTB HVAC LEGEND

SYMBOL	DESCRIPTION	SYMBOL	DESCRIPTION	SYMBOL	DESCRIPTION
	CEILING DIFFUSER – SUPPLY RECTANGULAR WITH ROUND NECK 4-WAY THROW UNLESS OTHERWISE INDICATED		MANUAL VOLUME DAMPER OPPOSED BLADE		STANDARD 90° RADIUS ELBOW
	CEILING DIFFUSER – RETURN RECTANGULAR WITH SQUARE NECK	M	LOW LEAKAGE MOTORIZED VOLUME DAMPER		STANDARD 45° RADIUS ELBOW
	SIDEWALL DIFFUSER – SUPPLY WITH MULTI-VANE DEFLECTOR	T	THERMOSTAT LOCATION		90° VANED ELBOW (PROVIDE ALL SQUARE OR RECTANGULAR ELBOWS WITH VANES EVEN IF SYMBOL IS MISSING)
	SIDEWALL DIFFUSER – RETURN WITH 30° FIXED DEFLECTION	M	CARBON MONOXIDE SENSOR LOCATION		45° VANED ELBOW (PROVIDE ALL SQUARE OR RECTANGULAR ELBOWS WITH VANES EVEN IF SYMBOL IS MISSING)
XX-X XXX CFM	DIFFUSER TAG REFERENCE SCHEDULE FOR SIZING	C	CARBON DIOXIDE SENSOR LOCATION		VANED TEE (PROVIDE ALL SQUARE OR RECTANGULAR TEE'S WITH VANES EVEN IF SYMBOL IS MISSING)
12"X12"	NEW RECTANGULAR DUCT WIDTH X DEPTH	CD	HVAC CONDENSATE DRAIN PIPING		STANDARD DUCT SIZE TRANSITION
10"ø	NEW ROUND DUCT DIAMETER	R	HVAC REFRIGERANT LINE		STANDARD SQUARE TO ROUND TRANSITION

UNIT SUPPLY / GPTB CODES AND STANDARDS

- **2021 INTERNATIONAL PLUMBING CODE**
- **2021 INTERNATIONAL MECHANICAL CODE**
- **2021 INTERNATIONAL FUEL GAS CODE**
- **2010 ADA STANDARDS FOR ACCESSIBLE DESIGN**
- **ASHRAE 90.1-2013 ENERGY STANDARD**

UNIT SUPPLY / GPTB HVAC DRAWING INDEX

SHEET NO.	SHEET TITLE
GM1.1	UNIT SUPPLY/GPTB – HVAC LEGEND AND NOTES
GM1.2	UNIT SUPPLY/GPTB – HVAC SCHEDULES
GM1.3	UNIT SUPPLY/GPTB – HVAC SCHEDULES
GM1.4	UNIT SUPPLY/GPTB – HVAC SCHEDULES
GM2.1	UNIT SUPPLY/GPTB – HVAC DETAILS
GM2.2	UNIT SUPPLY/GPTB – HVAC DETAILS
GM2.3	UNIT SUPPLY/GPTB – HVAC DETAILS
GM2.4	UNIT SUPPLY/GPTB – HVAC DETAILS
GM2.5	UNIT SUPPLY/GPTB – HVAC DETAILS
GM2.6	UNIT SUPPLY/GPTB – HVAC DETAILS
GM2.7	UNIT SUPPLY/GPTB – HVAC DETAILS
GM2.8	UNIT SUPPLY/GPTB – HVAC COMPLIANCE CALCULATIONS
GM3.1	ZONE A – UNIT SUPPLY/GPTB – HVAC PLAN
GM3.2	ZONE B – UNIT SUPPLY/GPTB – HVAC PLAN
GM4.1	ZONE A – UNIT SUPPLY/GPTB – HVAC HYDRONIC PIPING PLAN
GM4.2	ZONE B – UNIT SUPPLY/GPTB – HVAC HYDRONIC PIPING PLAN
GM4.3	UNIT SUPPLY/GPTB – HVAC HYDRONIC PIPING RISER DIAGRAM

UNIT SUPPLY / GPTB HVAC LEGEND AND NOTES

WHORTON ENGINEERING, INC.
HVAC – PLUMBING – PROCESS CONTROL
RANDALL WHORTON, P.E.
PHONE: (256) 820-9897
25 SUMMERALL GATE ROAD
ANNISTON, ALABAMA 36205
WHORTON ENGINEERING PROJECT NO. 22164

SS&L ARCHITECTS
Montgomery | Dothan | Auburn | Huntsville | Pensacola
WWW.SSLARCH.COM | 256.285.1063

Rev.	Description	Date

Job Number 21112
AL ARNG IFB # AC-25-B-0006-S
Date NOVEMBER 1, 2024
Drawn By JH
Checked By RDW

Project Title
HUNTSVILLE READINESS CENTER
5180 MOORE'S MILL ROAD
HUNTSVILLE AL, 35811

Sheet Title
UNIT SUPPLY/GPTB HVAC LEGEND AND NOTES

Sheet Number
GM1.1

ALABAMA REGISTERED No.14192 PROFESSIONAL ENGINEER RANDALL D. WHORTON
11-05-2024

UNIT SUPPLY / GPTB
GEOTHERMAL WATER SOURCE HEAT PUMP EQUIPMENT SCHEDULE

MARK NO.	NOMINAL FAN CFM	NOMINAL OSA CFM	EXT. STATIC IN. WC	GPM	COOLING CAPACITY										HEATING CAPACITY								ELECTRICAL DATA								MODEL NO. DATA		UNIT WEIGHT (LBS.)	MARK NO.	VOLTAGE	PUMP H.P.	HEAD LOSS (FT)	MANUFACTURER (OR APPROVED EQUAL)	MANUFACTURER MODEL NO.	NOTES
					WATER PD (FT.)	TOTAL CAP. MBH	SENS. CAP. MBH	TOTAL HEAT REJ.	EER (AHRI)	APPROX. COOLING POWER K.W.	ENT. AIR TEMP. (°F)	LEAVING AIR TEMP. (°F)	ENTERING WATER TEMP.	LEAVING WATER TEMP.	TOTAL CAP. MBH	TOTAL HEAT ABSORPT.	APPROX. HEATING POWER K.W.	ENTERING AIR TEMP. (DEG. F)	WATER PD (FT.)	ENTERING WATER TEMP.	LEAVING WATER TEMP.	COP (AHRI)	VOLTAGE	COMP. QTY.	COMP. R.L.A. (EA.)	FAN MOTOR QTY.	FAN H.P.	TOTAL F.L.A.	MIN. CIRCUIT AMP.	MAX FUSE SIZE	MANUFACTURER (OR APPROVED EQUAL)	MANUFACTURER MODEL NO.							
GHP G1	800	85	0.7	6.0	8.6	25.3	18.0	30.1	20.1	1.4	80/67	59.2°	80°	90°	31.6	25.5	1.6	70°	8.8	70°	61.5°	3.8	208/230-3-60	1	7.1	1	1/3	11.1	12.9	20	DAIKIN MCQUAY	WSMH024	279	PGHP G1	120-1-60	1/8	17.5	TACO	L0435	SEE BELOW
GHP G2	800	85	0.7	6.0	8.6	25.3	18.0	30.1	20.1	1.4	80/67	59.2°	80°	90°	31.6	25.5	1.6	70°	8.8	70°	61.5°	3.8	208/230-3-60	1	7.1	1	1/3	11.1	12.9	20	DAIKIN MCQUAY	WSMH024	279	PGHP G2	120-1-60	1/8	17.5	TACO	L0435	SEE BELOW
GHP G3	500	60	0.7	3.8	6.2	16.1	10.8	19.0	21.1	0.9	80/67	60.1°	80°	90.1°	20.6	16.9	1.0	70°	6.3	70°	61°	4.1	208/230-1-60	1	5.5	1	1/3	8.5	9.9	15	DAIKIN MCQUAY	WSMH015	210	PGHP G3	120-1-60	1/8	17.5	TACO	L0435	SEE BELOW
GHP G4	500	60	0.7	3.8	6.2	16.1	10.8	19.0	21.1	0.9	80/67	60.1°	80°	90.1°	20.6	16.9	1.0	70°	6.3	70°	61°	4.1	208/230-1-60	1	5.5	1	1/3	8.5	9.9	15	DAIKIN MCQUAY	WSMH015	210	PGHP G4	120-1-60	1/8	17.5	TACO	L0435	SEE BELOW
GHP G5	250	20	0.3	1.5	1.5	7.4	5.2	9.0	19.0	0.5	80/67	61.2°	80°	92°	9.5	7.7	0.6	70°	1.5	70°	59.7°	3.6	208/230-1-60	1	2.9	1	1/10	3.8	4.6	15	DAIKIN MCQUAY	WSMH007	151	PGHP G5	120-1-60	1/8	17.5	TACO	L0435	SEE BELOW
GHP G6	250	20	0.3	1.5	1.5	7.4	5.2	9.0	19.0	0.5	80/67	61.2°	80°	92°	9.5	7.7	0.6	70°	1.5	70°	59.7°	3.6	208/230-1-60	1	2.9	1	1/10	3.8	4.6	15	DAIKIN MCQUAY	WSMH007	151	PGHP G6	120-1-60	1/8	17.5	TACO	L0435	SEE BELOW
GHP G7	800	60	0.7	6.0	8.6	25.3	18.0	30.1	20.1	1.4	80/67	59.2°	80°	90°	31.6	25.5	1.6	70°	8.8	70°	61.5°	3.8	208/230-3-60	1	7.1	1	1/3	11.1	12.9	20	DAIKIN MCQUAY	WSMH024	279	PGHP G7	120-1-60	1/8	17.5	TACO	L0435	SEE BELOW
GHP G8	1,400	135	0.7	10.5	9.5	40.0	28.4	48.1	19.0	2.6	80/67	61.3°	80°	89.2°	53.3	42.7	3.0	70°	9.7	70°	61.9°	3.7	208/230-3-60	1	13.7	1	3/4	20.8	24.2	35	DAIKIN MCQUAY	WSMH042	347	PGHP G8	120-1-60	1/8	17.5	TACO	L0435	SEE BELOW
GHP G9	250	20	0.3	1.5	1.5	7.4	5.2	9.0	19.0	0.5	80/67	61.2°	80°	92°	9.5	7.7	0.6	70°	1.5	70°	59.7°	3.6	208/230-1-60	1	2.9	1	1/10	3.8	4.6	15	DAIKIN MCQUAY	WSMH007	151	PGHP G9	120-1-60	1/8	17.5	TACO	L0435	SEE BELOW
GHP G10	250	20	0.3	1.5	1.5	7.4	5.2	9.0	19.0	0.5	80/67	61.2°	80°	92°	9.5	7.7	0.6	70°	1.5	70°	59.7°	3.6	208/230-1-60	1	2.9	1	1/10	3.8	4.6	15	DAIKIN MCQUAY	WSMH007	151	PGHP G10	120-1-60	1/8	17.5	TACO	L0435	SEE BELOW
GHP G11	250	20	0.3	1.5	1.5	7.4	5.2	9.0	19.0	0.5	80/67	61.2°	80°	92°	9.5	7.7	0.6	70°	1.5	70°	59.7°	3.6	208/230-1-60	1	2.9	1	1/10	3.8	4.6	15	DAIKIN MCQUAY	WSMH007	151	PGHP G11	120-1-60	1/8	17.5	TACO	L0435	SEE BELOW
GHP G12	250	20	0.3	1.5	1.5	7.4	5.2	9.0	19.0	0.5	80/67	61.2°	80°	92°	9.5	7.7	0.6	70°	1.5	70°	59.7°	3.6	208/230-1-60	1	2.9	1	1/10	3.8	4.6	15	DAIKIN MCQUAY	WSMH007	151	PGHP G12	120-1-60	1/8	17.5	TACO	L0435	SEE BELOW
GHP G13	1,400	135	0.7	10.5	9.5	40.0	28.4	48.1	19.0	2.6	80/67	61.3°	80°	89.2°	53.3	42.7	3.0	70°	9.7	70°	61.9°	3.7	208/230-3-60	1	13.7	1	3/4	20.8	24.2	35	DAIKIN MCQUAY	WSMH042	347	PGHP G13	120-1-60	1/8	17.5	TACO	L0435	SEE BELOW
GHP G14	250	20	0.3	1.5	1.5	7.4	5.2	9.0	19.0	0.5	80/67	61.2°	80°	92°	9.5	7.7	0.6	70°	1.5	70°	59.7°	3.6	208/230-1-60	1	2.9	1	1/10	3.8	4.6	15	DAIKIN MCQUAY	WSMH007	151	PGHP G14	120-1-60	1/8	17.5	TACO	L0435	SEE BELOW
GHP G15	250	20	0.3	1.5	1.5	7.4	5.2	9.0	19.0	0.5	80/67	61.2°	80°	92°	9.5	7.7	0.6	70°	1.5	70°	59.7°	3.6	208/230-1-60	1	2.9	1	1/10	3.8	4.6	15	DAIKIN MCQUAY	WSMH007	151	PGHP G15	120-1-60	1/8	17.5	TACO	L0435	SEE BELOW
GHP G16	250	20	0.3	1.5	1.5	7.4	5.2	9.0	19.0	0.5	80/67	61.2°	80°	92°	9.5	7.7	0.6	70°	1.5	70°	59.7°	3.6	208/230-1-60	1	2.9	1	1/10	3.8	4.6	15	DAIKIN MCQUAY	WSMH007	151	PGHP G16	120-1-60	1/8	17.5	TACO	L0435	SEE BELOW
GHP G17	250	20	0.3	1.5	1.5	7.4	5.2	9.0	19.0	0.5	80/67	61.2°	80°	92°	9.5	7.7	0.6	70°	1.5	70°	59.7°	3.6	208/230-1-60	1	2.9	1	1/10	3.8	4.6	15	DAIKIN MCQUAY	WSMH007	151	PGHP G17	120-1-60	1/8	17.5	TACO	L0435	SEE BELOW
GHP G18	500	75	0.7	3.8	6.2	16.1	10.8	19.0	21.1	0.9	80/67	60.1°	80°	90.1°	20.6	16.9	1.0	70°	6.3	70°	61°	4.1	208/230-1-60	1	5.5	1	1/3	8.5	9.9	15	DAIKIN MCQUAY	WSMH015	210	PGHP G18	120-1-60	1/8	17.5	TACO	L0435	SEE BELOW
GHP G19	250	35	0.3	1.5	1.5	7.4	5.2	9.0	19.0	0.5	80/67	61.2°	80°	92°	9.5	7.7	0.6	70°	1.5	70°	59.7°	3.6	208/230-1-60	1	2.9	1	1/10	3.8	4.6	15	DAIKIN MCQUAY	WSMH007	151	PGHP G19	120-1-60	1/8	17.5	TACO	L0435	SEE BELOW
GHP G20	250	35	0.3	1.5	1.5	7.4	5.2	9.0	19.0	0.5	80/67	61.2°	80°	92°	9.5	7.7	0.6	70°	1.5	70°	59.7°	3.6	208/230-1-60	1	2.9	1	1/10	3.8	4.6	15	DAIKIN MCQUAY	WSMH007	151	PGHP G20	120-1-60	1/8	17.5	TACO	L0435	SEE BELOW
GHP G21	250	35	0.3	1.5	1.5	7.4	5.2	9.0	19.0	0.5	80/67	61.2°	80°	92°	9.5	7.7	0.6	70°	1.5	70°	59.7°	3.6	208/230-1-60	1	2.9	1	1/10	3.8	4.6	15	DAIKIN MCQUAY	WSMH007	151	PGHP G21	120-1-60	1/8	17.5	TACO	L0435	SEE BELOW
TOTAL		1,000		69.9		300.4	210.8	360.5		18.6					386.7	312.7	21.6																							

1. UNIT TO INCLUDE HOT GAS REHEAT AND HOT GAS BYPASS WITH HUMIDISTAT.
2. ALL UNITS SHALL INCLUDE MERV 13 FILTERS.
3. REFRIGERANT R-32.
4. ALL PUMPS TO BE STARTED AND STOPPED WITH UNIT COMPRESSOR. ALL ELECTRICAL REQUIRED FOR THIS OPERATION/CONNECTION SHALL BE FURNISHED AND INSTALLED BY THE DDC SYSTEM INSTALLER.
5. UNIT TO INCLUDE BIOCLIMATIC (OR APPROVED EQUAL) BI-POLAR IONIZATION UNIT (NEEDLEPOINT) MOUNTED IN UNIT RETURN DUCT PER MANUFACTURER'S RECOMMENDATION. IONIZATION UNIT SHALL BE POWERED FROM ASSOCIATED AIR HANDLER.
6. UNIT SHALL INCLUDE FACTORY HVAC UNIT CONTROLLER. COORDINATE WITH CONTROLS CONTRACTOR.
7. UNIT SHALL INCLUDE EXTENDED RANGE OPTION.
8. UNIT TO INCLUDE FACTORY LOOP CIRCULATOR PUMP.
9. EQUIPMENT MUST BE FULLY COORDINATED WITH THE HVAC CONTRACTOR AS WELL AS THE ELECTRICAL CONTRACTOR FOR FINAL SUBMITTAL AND INCORPORATION IN THE PROJECT. THIS INCLUDES SIZE, WEIGHT, SOUND PRESSURE LEVELS, AIR FLOW, MOUNTING CLEARANCES, ETC.
10. UNIT TO INCLUDE UV-C PROTECTION. EQUIPMENT SHALL BE FRESH-AIRE UV AIRBORNE DUCT SYSTEM MODEL TUV-C-ADS (OR APPROVED EQUAL).
11. ALL UNITS SHALL BE ASHRAE 90.1-2013 COMPLIANT.

APPROVED EQUALS: CARRIER AND TRANE

UNIT SUPPLY / GPTB
CEILING MOUNTED ELECTRIC HEATER SCHEDULE

MARK NO.	NOMINAL CFM	VOLTAGE	K.W.	BTU/HR (000)	AMPS	MANUFACTURER (OR APPROVED EQUAL)	UNIT MODEL NO.	UNIT WEIGHT (LBS)	NOTES
CEH G1	300	208-1-60	2.5	8.5	12.9	BERKO	FFCH-558	27	SEE BELOW

1. UNIT TO INCLUDE A RECESS MOUNTING ENCLOSURE.
2. UNIT TO INCLUDE AUTOMATIC THERMAL CUTOUT AND POWER DISCONNECT.
3. UNIT TO INCLUDE AN INTEGRAL THERMOSTAT.

APPROVED EQUALS: INDEECO, MARKEL, QMARK, AND RAYWALL

UNIT SUPPLY / GPTB
WALL MOUNTED ELECTRIC HEATER SCHEDULE

MARK NO.	NOMINAL CFM	VOLTAGE	WATTS	BTU/HR	AMPS	MANUFACTURER (OR APPROVED EQUAL)	UNIT MODEL NO.	UNIT WEIGHT (LBS)	NOTES
WEH G1	100	208-1-60	2,000	6,825	9.6	BERKO	FRC4020F	25	SEE BELOW

1. UNIT TO INCLUDE BUILT-IN TAMPER-PROOF THERMOSTAT.
2. UNIT TO INCLUDE FACTORY DISCONNECT SWITCH – MOUNTED BEHIND FRONT GRID PANEL.
3. UNIT TO INCLUDE THERMAL CUTOUT.
4. UNIT TO INCLUDE SEMI-RECESSED MOUNTING FRAME.
5. UNIT TO BE MOUNTED AT 16" AFF.

APPROVED EQUALS: INDEECO, MARKEL, QMARK, AND RAYWALL

UNIT SUPPLY / GPTB
DUCTLESS AIR CONDITIONING EQUIPMENT SCHEDULE (WALL MOUNT)

MARK NO.	NOMINAL FAN CFM	COOLING CAPACITY					MANUFACTURER	INDOOR UNIT DATA					OUTDOOR UNIT DATA						APPROXIMATE REFRIG. PIPING SIZE		NOTES
		TOTAL CAP. MBH	SENS. CAP. MBH	COND. E.A.T.	EVAP. E.W.B. TEMP	MIN. SEER2		VOLTAGE	MODEL NO.	FAN MOTOR FLA	MCA (A)	UNIT WEIGHT (LBS.)	VOLTAGE	MODEL NO.	COMP. R.L.A. (A)	MCA (A)	MOCP (A)	UNIT WEIGHT (LBS.)	GAS (IN. O.D.)	LIQUID (IN. O.D.)	
DAC G1	450	18.0	13.14	95	80/67	20.2	MITSUBISHI	208/230-1-60	PKA-AL18NL	0.19	1	28	208/230-1-60	PUY-AK18NL	7	16	28	112	1/2	1/4	SEE BELOW

1. UNIT TO INCLUDE A WALL MOUNTED 7-DAY PROGRAMMABLE AUTOMATIC CHANGEOVER THERMOSTAT WITH SUB-BASE AND LOCKING COVER. THERMOSTAT SHALL BE FACTORY MA REMOTE CONTROLLER MODEL PAR-40MAAU.
2. INDOOR UNIT TO BE WALL MOUNTED WITH FACTORY CONDENSATE PUMP AND SHALL INCLUDE LINE SET/CONDENSATE PUMP ENCLOSURE KIT (CONDENSATE PUMP APPROVED EQUALS: LITTLE GIANT EC-1K AND ASPEN/AIRTEC MINI AND MAXI LIME).
3. INDOOR UNIT TO RECEIVE POWER FROM OUTDOOR UNITS THROUGH FIELD-SUPPLIED INTERCONNECTED WIRING.
4. UNIT TO INCLUDE LOW AMBIENT CONTROLS TO 0°F.
5. VERIFY FINAL REFRIGERANT PIPING SIZE AND LENGTH WITH MANUFACTURER.
6. REFRIGERANT R-454B.
7. UNIT SHALL BE INTERFACED TO THE BUILDING AUTOMATION SYSTEM WITH FACTORY PROCON MELCOBEMS MINI PAC-UKPRC001-CN-1 WITH BACNET MSTP.
8. UNIT TO INCLUDE CONDENSER HAIL GUARD.
9. UNIT SHALL BE ASHRAE 90.1-2013 COMPLIANT.
10. ADDITIONAL REFRIGERANT CHARGE IS NEEDED DEPENDING ON THE SIZE AND LENGTH OF EXTENDED PIPING. COORDINATE WITH EQUIPMENT MANUFACTURER.
11. CONTRACTOR'S VENDOR SHALL PROVIDE REFRIGERANT LINE FINAL SIZES, LENGTHS, ETC. PER MANUFACTURER'S RECOMMENDATION. SUBMITTAL DRAWINGS SHALL INCLUDE CONTROLS, LINE SIZES, ETC. CONTRACTOR SHALL COORDINATE SIZES SHOWN ON PLANS WITH ACTUAL EQUIPMENT QUOTED PRIOR TO BIDDING.
12. FURNISH AND INSTALL FACTORY PRE-INSULATED REFRIGERANT LINE SETS.
13. EACH LINE SET SHALL INCLUDE FACTORY BALL VALVES FOR UNIT ISOLATION.
14. REFRIGERANT PIPING SHALL BE LABELED TO MATCH ASSOCIATED INDOOR AND OUTDOOR UNIT.
15. ALL EXPOSED INTERIOR REFRIGERANT PIPING SHALL BE ROUTED IN SCHEDULE 40 PVC. PRIME AND PAINT TO MATCH ADJACENT SURFACES. VERIFY PAINT COLOR WITH OWNER.
16. USE INSULATED REFRIGERANT PIPING CLAMPS WHERE REFRIGERANT PIPING IS INSULATED.

UNIT SUPPLY / GPTB
HVAC SCHEDULES

WHORTON ENGINEERING, INC.
HVAC – PLUMBING – PROCESS CONTROL
RANDALL WHORTON, P.E.
PHONE: (256) 820-9897
25 SUMMERALL GATE ROAD
ANNISTON, ALABAMA 36205

WHORTON ENGINEERING PROJECT NO. 22164

SS&L ARCHITECTS
Montgomery | Dothan | Auburn | Huntsville | Pensacola
WWW.SSLARCH.COM | 256.285.1063

Rev.	Description	Date

Job Number 21112
AL ARNG IFB # AC-25-B-0006-S
Date NOVEMBER 1, 2024
Drawn By JH
Checked By RDW
Project Title

HUNTSVILLE READINESS CENTER
5180 MOORE'S MILL ROAD
HUNTSVILLE AL, 35811

Sheet Title
UNIT SUPPLY/GPTB HVAC SCHEDULES

Sheet Number
GM1.2

11-05-2024

UNIT SUPPLY / GPTB
GAS-FIRED UNIT HEATER SCHEDULE

MARK NO.	PERFORMANCE DATA							MOTOR DATA			MODEL NO. DATA		UNIT WEIGHT (LBS)	NOTES
	TOTAL INPUT (BTU/HR.)	TOTAL OUTPUT (BTU/HR.)	CFM @ 70°F	OUTLET VELOCITY (FPM)	AIR TEMP. RISE (°F)	MAXIMUM MOUNTING HEIGHT	HEAT THROW	MOTOR H.P.	TOTAL AMPS (@ 115V)	MOTOR RPM	MANUFACTURER (OR APPROVED EQUAL)	UNIT MODEL NO.		
GUH G1	75,000	62,250	1,160	769	48'	14'-0"	38'-0"	1/12	2.5	1625	MODINE	HD75	97	SEE BELOW

1. UNIT TO INCLUDE SPARK IGNITION, LOW VOLTAGE THERMOSTAT CONTROLS, 3" EXHAUST FLUE, AND 3" COMBUSTION AIR PIPE.
2. VERIFY FINAL MOUNTING HEIGHT AND LOCATION WITH ARCHITECT/ENGINEER.
3. THERMOSTAT SHALL INCLUDE HEAVY DUTY WIRE GYM GUARD.
4. ALL UNITS SHALL BE INTERFACED TO THE BUILDING AUTOMATION SYSTEM.
5. UNIT SHALL INCLUDE DDC CONTROLS UTILIZING A HONEYWELL SPYDER PUL4024S (OR EQUAL) PROGRAMMABLE CONTROLLER WITH A HONEYWELL TR-42 (OR EQUAL) COMMUNICATING WALL MODULE.
6. UNIT SHALL INCLUDE FACTORY CONCENTRIC VENT.
7. UNIT SHALL INCLUDE FACTORY CONDENSATE pH NEUTRALIZING KIT, CONDENSATE PUMP, CONDENSATE PUMP SUSPENSION KIT, AND CONDENSATE TREATMENT.

APPROVED EQUALS: JANITROL AND REZNOR

UNIT SUPPLY / GPTB
PORTABLE DEHUMIDIFIER EQUIPMENT SCHEDULE

MARK NO.	NOMINAL FAN CFM	UNIT DIMENSIONS (W x H x D)	REFRIGERANT	WATER REMOVAL	OPERATING RANGE	ELECTRICAL		MODEL NO. DATA		WEIGHT (LBS.)	NOTES
				80°F 60% RH		POWER SUPPLY	AMPS	MANUFACTURER (OR APPROVED) EQUAL)	UNIT MODEL NO.		
PDH G1	275	20"x36"x17"	R-454B	116 PINTS/DAY	56°-95°F	115-1-60	4.5	THERMA-STOR	SANTA-FE CLASSIC	110	SEE BELOW
PDH G2	275	20"x36"x17"	R-454B	116 PINTS/DAY	56°-95°F	115-1-60	4.5	THERMA-STOR	SANTA-FE CLASSIC	110	SEE BELOW

1. UNIT TO INCLUDE FACTORY CONDENSATE PUMP KIT.
2. UNIT TO INCLUDE FACTORY MERV-13 FILTER.

UNIT SUPPLY / GPTB
LOUVER SCHEDULE

MARK NO.	MOUNTING	SIZE W X H	BLADE ANGLE	BLADE CENTERS	MIN. FREE AREA	MINIMUM FREE AREA SQ. FT.	MAXIMUM PRESSURE DROP IN W.G.	CFM	MODEL NO. DATA		NOTES
									MANUFACTURER (OR APPROVED EQUAL)	MODEL NO.	
L G1	SIDE WALL	36"X36"	45°	6.5"	40%	3.61	0.15	3,500	GREENHECK	EAC-601	1 2
L G2	SIDE WALL	48"X40"	45°	6"	36%	4.78	0.10	3,500	GREENHECK	EACC-601	1 3 4
L G3	SIDE WALL	36"X36"	45°	6.5"	40%	3.61	0.15	3,500	GREENHECK	EAC-601	1 2
L G4	SIDE WALL	48"X40"	45°	6"	36%	4.78	0.10	3,500	GREENHECK	EACC-601	1 3 4
L G5	SIDE WALL	42"X36"	30°	–	45%	4.70	0.15	4,000	LOUVERS & DAMPERS, INC.	TE-15	1 5 6 7 8
L G6	SIDE WALL	60"X60"	45°	6"	44%	11.03	0.13	10,500	GREENHECK	EACC-601	1 9 10 11
L G7	SIDE WALL	16"X16"	37°	4"	32%	0.57	0.10	475	GREENHECK	ESD-635	1

1. LOUVER TO INCLUDE FLANGE FRAME AND KYNAR FINISH. VERIFY FINAL COLOR AND FINISH WITH OWNER. VERIFY QUANTITY WITH PLANS.
2. LOUVER TO INCLUDE MOTORIZED DAMPER.
3. LOUVER TO INCLUDE MOTORIZED DAMPER CONCEALED IN EXTENDED LOUVER BASE (SIZE SCHEDULED INCLUDES EXTENDED BASE. FREE AREA SCHEDULED IS ACTUAL FREE AREA WITH CONCEALED DAMPER.)
4. LOUVER TO INCLUDE MILLER WIREWORKS HEAVY DUTY WIRE GYM GUARD.
5. LOUVER L-G5 TO BE ALUMINUM.
6. LOUVER L-G5: PROVIDE ALL TRANSITIONS AND CONNECTIONS NECESSARY FOR PROPER INSTALLATION.
7. LOUVER L-G5 TO INCLUDE BACKDRAFT DAMPER AND INSECT SCREEN. COORDINATE SIZE AND LOCATION IN EXTERIOR WALL WITH ARCHITECTURAL AND STRUCTURAL DRAWINGS.
8. LOUVER L-G5: HIGH TEMPERATURE SERVICE FOR VEHICLE EXHAUST.
9. LOUVER L-G6 TO INCLUDE MOTORIZED DAMPER CONCEALED IN EXTENDED LOUVER BASE (SIZE SCHEDULED INCLUDES EXTENDED BASE).
10. LOUVER L-G6 TO INCLUDE MILLER WIREWORKS HEAVY DUTY WIRE GYM GUARD.
11. LOUVER L-G6 SHALL BE MOUNTED APPROXIMATELY 4'-0" ABOVE GRADE. VERIFY FINAL LOCATION/HEIGHT WITH ARCHITECT.

APPROVED EQUALS: RUSKIN AND UNITED ENERTECH.

UNIT SUPPLY / GPTB
EXHAUST FAN SCHEDULE

MARK NO.	MOUNTING	CFM	STATIC IN W.G.	SONES	WATTS/H.P.	VOLTAGE	MANUFACTURER (OR APPROVED EQUAL)	MODEL NO.	WEIGHT (LBS.)	NOTES
EF G1	ROOF	10,500	0.50	10.6	2.0 H.P.	208-3-60	LOREN COOK	402R9B	510	1 2 3 4
EF G2	WALL	3,500	0.50	18.2	1.0 H.P.	208-3-60	LOREN COOK	30XMWH	339	5 6 7
EF G3	WALL	3,500	0.50	18.2	1.0 H.P.	208-3-60	LOREN COOK	30XMWH	339	5 6 7
EF G4	CEILING	200	0.25	1.7	90 WATTS	115-1-60	LOREN COOK	GC-520	32	8 9
EF G5	CEILING	200	0.25	1.7	90 WATTS	115-1-60	LOREN COOK	GC-520	32	8 9
EF G6	CEILING	75	0.25	1.6	55 WATTS	115-1-60	LOREN COOK	GC-142	15	8 9

1. FAN TO INCLUDE FACTORY ROOF CURB. COORDINATE ALL ROOF CURBS WITH THE ROOFING CONTRACTOR. PRIME AND PAINT ROOF CURB AND EXHAUST FAN TO MATCH ROOF.
2. FAN TO INCLUDE HEAVY DUTY WIRE GYM GUARD.
3. EXHAUST FAN INSTALLATION SHALL INCLUDE A FIELD INSTALLED WALL MOUNTED VARIABLE SPEED DRIVE. MINIMUM DRIVE SPEED SHALL BE AS REQUIRED TO OBTAIN MINIMUM VENTILATION OF 5,250 CFM. VARIABLE SPEED DRIVE SHALL INCLUDE PHASE LOSS PROTECTION, MOTOR "START-STOP", AND "MANUAL-AUTOMATIC" CONTROL. VARIABLE SPEED DRIVE SHALL BE INTERLOCKED WITH AREA LIGHTING.
4. FAN TO INCLUDE FACTORY TIE-DOWN EYELETS, FACTORY DISCONNECT, AND FACTORY DAMPER.
5. FAN TO BE CONTROLLED WITH WALL MOUNTED THERMOSTAT.
6. FAN TO INCLUDE WALL COLLAR AND WIREGUARD-MOTOR SIDE.
7. FAN TO INCLUDE FACTORY DISCONNECT.
8. FAN TO INCLUDE FACTORY MOUNTED/PRE-WIRED FAN SPEED CONTROL.
9. FAN TO BE SWITCHED WITH LIGHTING.

APPROVED EQUALS: BREIDERT, GREENHECK, AND PENN.

UNIT SUPPLY / GPTB
DESTRATIFICATION FAN SCHEDULE
DF-G1 (14 FT. DIAMETER)

MODEL NO.	BIG ASS FANS BASIC 6 (14 FT. DIA.) OR APPROVED EQUAL.
NUMBER AND TYPE OF AIRFOILS	SIX (6) PATENTED POWERFOIL AIRFOILS
AIRFOIL FINISH	MILL FINISH ALUMINUM OR CUSTOM COLOR FINISH
WINGLET (STANDARD COLOR)	POWERFOIL WINGLET (BAF YELLOW)
CONTROLLER	VARIABLE SPEED CONTROLLER (WALL MOUNT), NEMA 4X
INPUT POWER AND REQUIRED BREAKER	200-240 VAC, 50/60 HZ, 3ø, 15 A
MOTOR	1.5 HP
MAXIMUM SPEED	110 RPM
MAXIMUM OPERATING TEMPERATURE (°F)	104°F
FAN WEIGHT (AS SHOWN)	192 LBS
MINIMUM AIRFOIL CLEARANCES REQUIRED	2 FT. ON SIDES, 5 FT. BELOW CEILING

1. 7 YEAR MECHANICAL WARRANTY; 3 YEAR ELECTRICAL WARRANTY; 1 YEAR LABOR WARRANTY.
2. CONTRACTOR SHALL FURNISH AND INSTALL STRUCTURAL SUPPORTS REQUIRED TO INSTALL FAN IN ACCORDANCE WITH MANUFACTURER'S RECOMMENDATIONS. STRUCTURAL SUPPORTS SHALL BE SUBMITTED TO THE ARCHITECT FOR REVIEW AND APPROVAL.
3. FAN TO INCLUDE "NO ASS" PACKAGE.
4. COORDINATE HANGING HEIGHT AND FINAL LOCATION WITH LIGHTING, ETC. TO ENSURE PROPER OPERATION.

APPROVED EQUALS: HUNTER, GREENHECK, AND MACRO AIR

UNIT SUPPLY / GPTB
HVAC SCHEDULES

WHORTON ENGINEERING, INC.
HVAC – PLUMBING – PROCESS CONTROL
RANDALL WHORTON, P.E.
PHONE: (256) 820-9897
25 SUMMERALL GATE ROAD
ANNISTON, ALABAMA 36205

WHORTON ENGINEERING PROJECT NO. 22164

SS&L ARCHITECTS
Montgomery | Dothan | Auburn | Huntsville | Pensacola
WWW.SSLARCH.COM | 256.285.1063

Rev.	Description	Date

Job Number 21112
AL ARNG IFB # AC-25-B-0006-S
Date NOVEMBER 1, 2024
Drawn By JH
Checked By RDW

Project Title
HUNTSVILLE READINESS CENTER
5180 MOORE'S MILL ROAD
HUNTSVILLE AL, 35811

Sheet Title
UNIT SUPPLY/GPTB HVAC SCHEDULES

Sheet Number
GM1.3

11-05-2024

UNIT SUPPLY / GPTB
VEHICLE FUME EXHAUST VENTILATION / SYSTEM NOTES

1. EXHAUST DUCTWORK SHALL BE RATED FOR 6" NEGATIVE STATIC PRESSURE. ROUND SPIRAL DUCTWORK AND FITTINGS SHALL BE CONSTRUCTED OF SPIRAL LOCKSEAM DUCTWORK AT THE SIZES LISTED IN THE TABLE BELOW, AND CONSTRUCTED PER SMACNA STANDARDS. RECTANGULAR DUCT SHALL BE FABRICATED AND INSTALLED PER SMACNA STANDARDS FOR THE REQUIRED PRESSURE CLASS, INCLUDING ALL REQUIRED BRACING.
2. CONTRACTOR TO KEEP EXHAUST DUCT AS HIGH AS POSSIBLE. VERIFY DUCT SIZES AS SHOWN WILL FIT WITH ADEQUATE CLEARANCE, MODIFY LOCATION SLIGHTLY AS NECESSARY.
3. COORDINATE WITH ELECTRICAL CONTRACTOR AND OWNER FOR EXACT LOCATION OF EXHAUST SYSTEM SWITCHES.

ROUND SPIRAL DUCT (–6" W.G.)		
DIAMETER (IN.)	DUCT GAGE	
	DUCT	FITTINGS
10"	22	22
12"	22	22
14"	22	20
16"	22	18
18"	22	18
20"	22	18
22"	22	16
24"	20	16

4. SLOTTED ALUMINUM CHANNEL, ARI–3000 MODEL TO BE MOUNTED FROM STRUCTURE (SEE DETAIL FOR MOUNTING TO JOISTS).
5. EXHAUST DUCT TO BE MOUNTED ABOVE EXHAUST CHANNEL (SEE MOUNTING DETAILS).
6. INLINE CENTRIFUGAL EXHAUST FAN MOUNTED HIGH IN SPACE AND SUSPENDED FROM STRUCTURE. PROVIDE BACKDRAFT DAMPER AT DISCHARGE.
7. PROVIDE WALL–MOUNTED EXHAUST LOUVER IN WALL AND SEAL WEATHER TIGHT. INSTALL DUCT PLENUM WITH TURNING VANES ON INSIDE OF LOUVER.
8. THE PROJECT INCLUDES OF THE INSTALLATION OF A NEW VEHICLE FUME EXHAUST SYSTEM (1) FOR THE TRAINING BAY SHOP. THE INSTALLATION INCLUDES A NEW ARI–HETRA OR APPROVED EQUAL SYSTEM WITH EXHAUST DUCTS, FANS, MOTORS, HARDWARE, ETC. EACH EXHAUST CONNECTION POINT SHALL BE RATED FOR 1700 CFM, 600 DEGREES–F. THE SILICON HOSE SHALL BE RATED FOR 1700 CFM, 600 DEGREES–F.
9. EACH SYSTEM SHALL INCLUDE QUICK CONNECT FITTINGS, TWO DIESEL EXHAUST CANES, TWO ADDITIONAL SECTIONS OF ADDITIONAL 8" HOSE 10 FOOT IN LENGTH, 8" DIAMETER WYE ADAPTER FITTING, ETC.
10. SYSTEM SHALL INCLUDE A WALL MOUNTED STORAGE RACK FOR EXTRA HOSE/DUCT AND ACCESSORIES AS SHOWN ON THE PLANS.
11. ALL ITEMS NOTED, SHOWN ON THE PLANS, OR NEEDED TO PROVIDE A COMPLETE OPERATING SYSTEM INSTALLED IN ACCORDANCE WITH THE MANUFACTURER'S RECOMMENDATIONS, OSHA, NIOSH, ETC. SHALL BE FURNISHED AND INSTALLED.
12. EACH OF THE EXHAUST SYSTEMS SHALL INCLUDE TWO 8" DIAMETER SILICON FLEXIBLE HOSE DROP ON A NON–MOTORIZED MOBILE HOSE REEL/SPRING AS SHOWN ON THE PLANS AND SPECIFICATIONS. THE HOSE SHALL BE SPRING SUPPORTED AND RETRACTED FOR STORAGE WHEN NOT IN USE AND SHALL BE APPROXIMATELY 30 FEET IN TOTAL LENGTH.

UNIT SUPPLY / GPTB
ARI-HETRA ARI-3000 FUME EXHAUST COMPONENTS

ITEMS	PART #	QUANTITY	DESCRIPTION
1	200–001	–	ALUMINUM SLOTTED SUCTION DUCT, ARI–3000 (REFERENCE PLANS FOR SUCTION DUCT LENGTH)
2	210–001	2	DUCT CONNECTOR
3	110–003	2	LIMIT STOP SET
4	110–011	2	DUCT CONNECTOR PLATE
5	210–005	2	END COVER
6	120–250	2	TOP DUCT CONNECTOR
8	110–002	–	BRACKET (REFERENCE PLAN LAYOUT)
9	820–356	1	7.5 HP EXHAUST FAN 208V 3 PHASE
10	999–999	2	ACCESSORIES FOR FAN (INLET AND OUTLET SHEET METAL, VIB PADS)
11	999–905	2	DIESEL CANE
12	907–200	2	8" Y PIPE ADAPTER
13	–	2	10 FT., 600°F SILICONE HOSE EXTENSIONS WITH QUICK CONNECT FITTINGS.

1. SYSTEM TO INCLUDE TWO (2) SPRING OPERATED HOSE REELS EQUIPPED WITH 34 FT. OF 8"ø EXHAUST HOSE TEMPERATURE RATED UP TO 600°F ON TROLLEYS. SYSTEM TO INCLUDE QUICK CONNECT FITTINGS.
2. VERIFY QUANTITY WITH PLANS.

UNIT SUPPLY / GPTB
VEHICLE EXHAUST FAN SCHEDULE

MARK NO.	MOUNTING	CFM	STATIC IN W.G.	SONES	H.P.	VOLTAGE	MANUFACTURER (OR APPROVED EQUAL)	MODEL NO.	APPROX. WEIGHT (LBS.)	NOTES
VEF G1	INLINE	4,000	6	0.9	7.5	208–3–60	AMERICAN FAN COMPANY	QBCS–165	200	SEE BELOW

1. CENTRIFUGAL STYLE CLASS 2, COORDINATE EXACT ARRANGEMENT WITH DRAWINGS.
2. VIBRATION ISOLATION HANGERS.
3. BACKDRAFT DAMPER AT DISCHARGE.
4. FLEX DUCT CONNECTOR AT OUTLET.
5. PROVIDE WITH PREMIUM EFFICIENCY MOTOR.
6. FAN TO BE SWITCHED WITH WALL SWITCH.

NOTE: FURNISHED WITH ARI–HETRA VEHICLE EXHAUST EQUIPMENT.

UNIT SUPPLY / GPTB
GAS INFRARED HEATER SCHEDULE

MARK NO.	VOLTAGE	MOUNTING	MOUNTING HEIGHT	GAS INPUT MBH	MANUFACTURER	MODEL NO.	NOTES
GIR G1	120–1–60 3 AMPS MAX	CEILING	TILT 30° 14'–0"	50	RE–VERBER–RAY	DR–50–NFS–2	SEE BELOW
GIR G2	120–1–60 3 AMPS MAX	CEILING	TILT 30° 14'–0"	50	RE–VERBER–RAY	DR–50–NFS–2	SEE BELOW
GIR G3	120–1–60 3 AMPS MAX	CEILING	TILT 30° 14'–0"	50	RE–VERBER–RAY	DR–50–NFS–2	SEE BELOW
GIR G4	120–1–60 3 AMPS MAX	CEILING	TILT 30° 14'–0"	50	RE–VERBER–RAY	DR–50–NFS–2	SEE BELOW
GIR G5	120–1–60 3 AMPS MAX	CEILING	TILT 30° 14'–0"	50	RE–VERBER–RAY	DR–50–NFS–2	SEE BELOW
GIR G6	120–1–60 3 AMPS MAX	CEILING	TILT 30° 14'–0"	50	RE–VERBER–RAY	DR–50–NFS–2	SEE BELOW

1. MECHANICAL CONTRACTOR TO FURNISH AND INSTALL ALL INFRARED HEATERS. HEATER CONTROL SHALL BE BY BUILDING AUTOMATION (REFERENCE CONTROL DETAILS FOR ADDITIONAL INFORMATION). ELECTRICAL CONTRACTOR TO FURNISH AND INSTALL ELECTRICAL POWER, 120 VAC COILS, AND ALL ASSOCIATED CONDUIT, WIRE, ETC. MECHANICAL CONTRACTOR TO VERIFY ALL FINAL CONNECTIONS PRIOR TO INITIAL START–UP. DIRECT SPARK IGNITION.
2. VERIFY FINAL MOUNTING HEIGHT AND LOCATION WITH ARCHITECT. MOUNTING SHALL BE ABLE TO ADJUST MOUNTING ANGLE OF HEATER. INITIAL MOUNTING ANGLE SHALL BE 30 DEGREES.
3. ALL INFRA–RED HEATERS SHALL BE PROVIDED WITH DDC CONTROLS BASED ON HONEYWELL SPYDER PUL4024S (OR EQUAL) WITH A HONEYWELL TR–42 (OR EQUAL) THERMOSTAT. HEATERS SHALL INCLUDED BLACK BULB SENSORS AND BE FULLY INTERFACED TO THE BUILDING AUTOMATION SYSTEM.

THE CONTRACTOR/SUPPLIER SHALL FURNISH AND/OR INSTALL/DELIVER GAS INFRA–RED SPACE HEATERS AS SHOWN ON THE DRAWING(S) AS DESCRIBED BELOW:

HEATERS SHALL BE RE–VERBER–RAY MODEL(S) AS SCHEDULED AND AS MANUFACTURED BY DETROIT RADIANT PRODUCTS COMPANY – WARREN, MICHIGAN. HEATERS SHALL BE EQUIPPED WITH A 120 VAC, 60 HZ, O, MANUAL IGNITION/SPARK PILOT IGNITION/GLO–COIL IGNITION/DIRECT SPARK IGNITION/MILLVOLT CONTROL SYSTEM. HEATERS SHALL BE DESIGN CERTIFIED BY A.G.A., AND COMPLY WITH CURRENT OSHA REQUIREMENTS, ACCEPTED BY FIA/FM AND BE LISTED BY UL.

THE HEATER'S COMBUSTION SURFACE SHALL BE MADE OF PERFORATED CERAMIC REFRACTORY, SHALL BE CAPABLE OF OPERATING CONTINUOUSLY AT 1810°F AND SHALL WITHSTAND THERMAL SHOCK WHEN WATER QUENCHED.

THE MANUFACTURER SHALL WARRANT THE HEATER'S INFRA–RED ELEMENT ASSEMBLY FOR A PERIOD OF TEN (10) YEARS. THE SECONDARY RADIATING SURFACE (RODS OR SCREENS) SHALL BE WARRANTED FOR TEN (10) YEARS AGAINST DETERIORATION AND FAILURE, AND THE MANUFACTURER SHALL WARRANT ITS ORIGINAL POSITION FROM THE CERAMIC BY PROVIDING A TEN (10) YEAR WARRANTY ON THE (ROD OR SCREEN) RETAINING DEVICE.

HEATERS SHALL OPERATE SATISFACTORILY ON NATURAL GAS AT AN INLET PRESSURE OF 7 INCHES W.C.

THE CONTRACTOR SHALL MAINTAIN CLEARANCES TO AUTOMOBILES AND COMBUSTIBLES AS RECOMMENDED BY THE MANUFACTURER.

UNIT SUPPLY / GPTB
INTAKE VENT SCHEDULE

MARK NO.	CFM	THROAT AREA S.F.	P.D.	MATERIAL	MANUFACTURER (OR APPROVED EQUAL)	MODEL NO.	NOTES
IV G1	1,000	2.292	0.05	SPUN ALUMINUM	LOREN COOK	PR–20	SEE BELOW

1. INTAKE VENT TO INCLUDE FACTORY ROOF CURB. COORDINATE ALL ROOF CURBS WITH THE ROOFING CONTRACTOR. PRIME AND PAINT ROOF CURB AND INTAKE VENT TO MATCH ROOF.
2. INTAKE VENT TO INCLUDE FACTORY MOTORIZED DAMPER, MANUAL DAMPER, AND BIRDSCREEN.

APPROVED EQUALS: CARNES, GREENHECK, AND PENN

UNIT SUPPLY / GPTB
HVAC SCHEDULES

WHORTON ENGINEERING, INC.
HVAC – PLUMBING – PROCESS CONTROL
RANDALL WHORTON, P.E.
PHONE: (256) 820–9897
25 SUMMERALL GATE ROAD
ANNISTON, ALABAMA 36205
WHORTON ENGINEERING PROJECT NO. 22164

SS&L ARCHITECTS
Montgomery | Dothan | Auburn | Huntsville | Pensacola
WWW.SSLARCH.COM | 256.285.1063

Rev.	Description	Date

Job Number: 21112
AL ARNG IFB #: AC-25-B-0006-S
Date: NOVEMBER 1, 2024
Drawn By: JH
Checked By: RDW
Project Title:

HUNTSVILLE READINESS CENTER
5180 MOORE'S MILL ROAD
HUNTSVILLE AL, 35811

Sheet Title: UNIT SUPPLY / GPTB HVAC SCHEDULES

Sheet Number: GM1.4

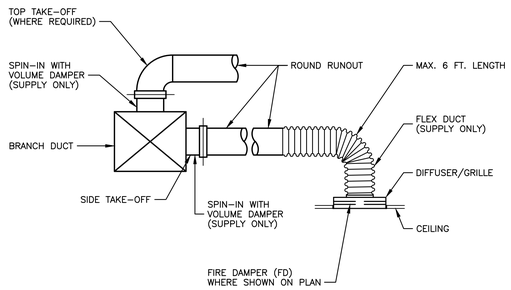

DIFFUSER / GRILLE RUNOUT DETAIL

NOT TO SCALE

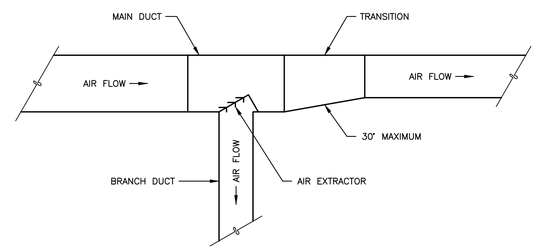

TYPICAL DUCT TAKE OFF DETAIL

NOT TO SCALE

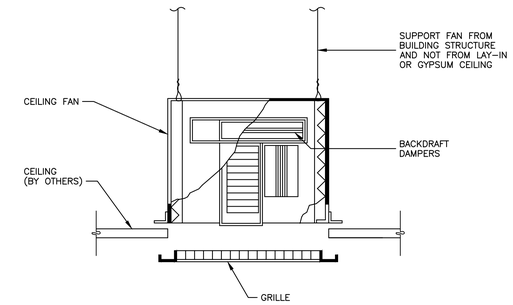

TYPICAL CEILING EXHAUST FAN DETAIL

NOT TO SCALE

NOTE: LABEL CEILING GRID WHERE UNITS ARE LOCATED ABOVE CEILING. USE WHITE BACKGROUND WITH BLACK LETTERS/NUMBERS. LABEL ALL DEVICES, DUCTWORK, PIPING, VALVES, SENSORS, ACTUATORS, ETC. WITH RIGID TYPE LABEL.

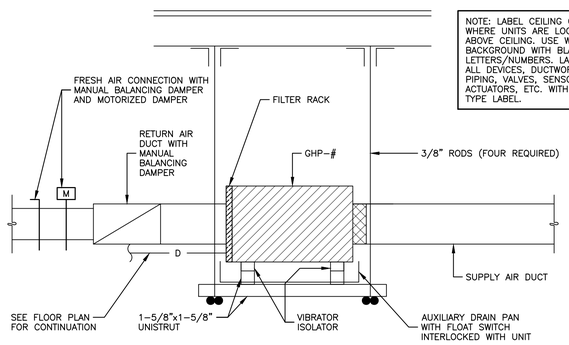

TYPICAL SECTION AT HORIZONTAL INDOOR UNIT

NOT TO SCALE

METAL CHASE SHALL BE SIZED TO CONCEAL ALL EXTERIOR REFRIGERANT LINES, CONTROL WIRING, AND ELECTRICAL WIRING (TYPICAL).

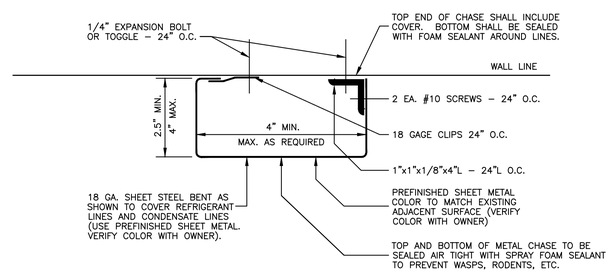

SECTION THROUGH METAL CHASE

NOT TO SCALE

ALL PIPING SHALL BE SPACED ADEQUATELY APART (HOT GAS REHEAT, SUCTION, LIQUID, ETC.) TO ENSURE THAT INSULATION AND JACKETING CAN BE INSTALLED WITH GOOD WORKMANSHIP.

ALL REFRIGERANT LINES SHALL BE SIZED/APPROVED BY THE EQUIPMENT VENDOR/COMPRESSOR MANUFACTURER. ALL REFRIGERANT LINES SHALL BE INSTALLED USING INSULATED LINE CLAMPS.

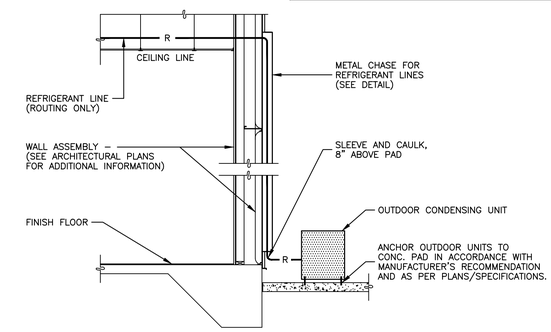

REFRIGERANT LINE ROUTING DETAIL

NOT TO SCALE

1. PROVIDE MINIMUM 3.5" OF CLEARANCE AT THE TOP OF THE UNIT OR AS PER MANUFACTURER'S RECOMMENDATION.
2. ATTACH WALL MOUNT UNIT TO MANUFACTURER'S PROVIDED INSTALLATION PLATE. MOUNT INSTALLATION PLATE TO WALL PER MANUFACTURER'S RECOMMENDATIONS.

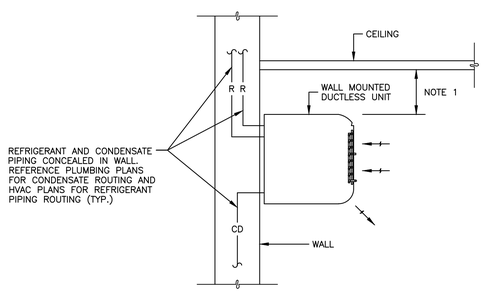

WALL-MOUNTED DUCTLESS UNIT DETAIL

NOT TO SCALE

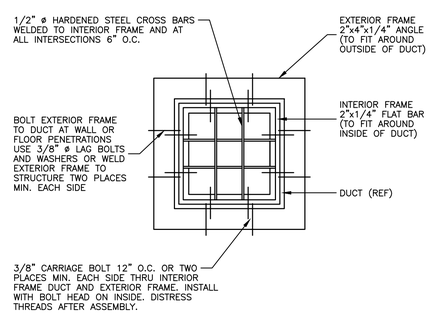

SECURITY BAR DUCT OPENING DETAIL AT VAULT AREA

NOT TO SCALE

UNIT SUPPLY / GPTB HVAC DETAILS

WHORTON ENGINEERING, INC.

HVAC – PLUMBING – PROCESS CONTROL

RANDALL WHORTON, P.E.
PHONE: (256) 820-9897

25 SUMMERALL GATE ROAD
ANNISTON, ALABAMA 36205

WHORTON ENGINEERING PROJECT NO. 22164

SS&L ARCHITECTS
Montgomery | Dothan | Auburn | Huntsville | Pensacola
WWW.SSLARCH.COM | 256.285.1063

Rev.	Description	Date

Job Number: 21112

AL ARNG IFB #: AC-25-B-0006-S

Date: NOVEMBER 1, 2024

Drawn By: JH

Checked By: RDW

Project Title:

HUNTSVILLE READINESS CENTER
5180 MOORE'S MILL ROAD
HUNTSVILLE AL, 35811

Sheet Title: UNIT SUPPLY/GPTB HVAC DETAILS

Sheet Number: GM2.1

ALABAMA LICENSED PROFESSIONAL ENGINEER No.14192 RANDALL D. WHORTON
11-05-2024

CONTRACTOR SHALL FURNISH AND INSTALL STRUCTURAL SUPPORTS REQUIRED TO INSTALL FAN IN ACCORDANCE TO INSTALL FAN IN ACCORDANCE WITH MANUFACTURER'S RECOMMENDATIONS. STRUCTURAL SUPPORTS SHALL BE SUBMITTED TO THE ARCHITECT FOR REVIEW AND APPROVAL.

BIG ASS FANS BASIC 6 (14 FT. DIA.) OR APPROVED EQUAL
SEE UNIT SUPPLY/GPTB DESTRATIFICATION FAN SCHEDULE DF-G1 FOR ADDITIONAL INFORMATION.

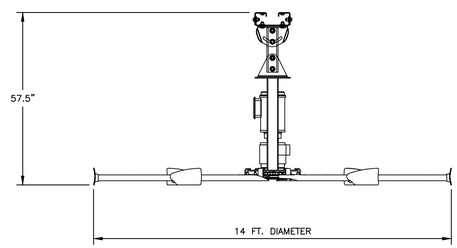

DF-G1 FAN - ELEVATION VIEW

NOT TO SCALE

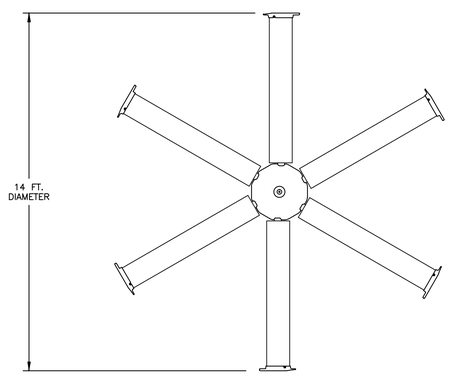

DF-G1 FAN - PLAN VIEW

NOT TO SCALE

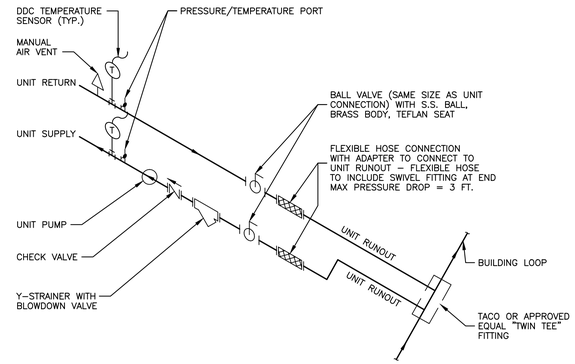

TYPICAL GEOTHERMAL HEAT PUMP CONNECTION DETAIL

NOT TO SCALE

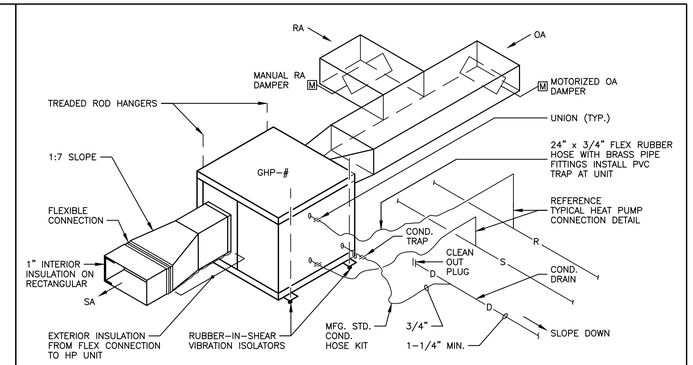

TYPICAL GEOTHERMAL HEAT PUMP CONNECTIONS

NOT TO SCALE

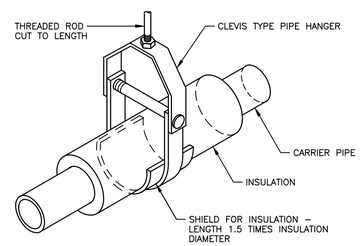

TYPICAL CLEVIS TYPE PIPE HANGER FOR INSULATED PIPE DETAIL

NOT TO SCALE

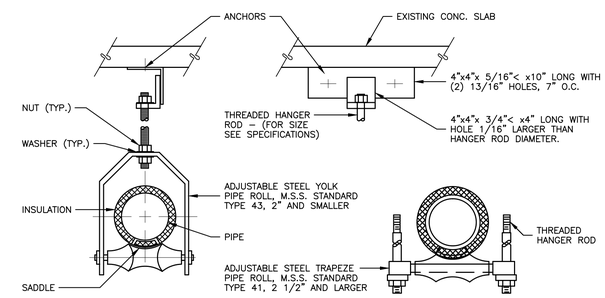

TYPICAL ROLLER PIPE HANGER DETAIL

NOT TO SCALE

NOTE: SEE AIR DEVICE SCHEDULE FOR OUTSIDE AIR INTAKE VENT SIZE, CFM, ETC. SEE PLAN FOR LOCATION AND DESIGNATION.

COORDINATE ALL ROOF CURBS WITH THE ROOFING CONTRACTOR. PRIME AND PAINT ROOF CURB AND INTAKE VENT TO MATCH ROOF.

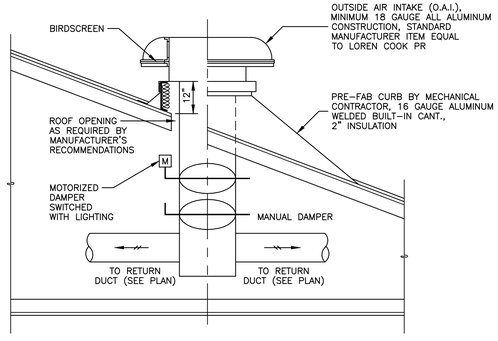

TYPICAL INTAKE VENT DETAIL

NOT TO SCALE

1. MARK NO. – LABEL MARK NO. TO MATCH PLANS (EF-1. HP-1. WHP-1, ETC.)
2. UNIT DESCRIPTION – EXHAUST FAN, SPLIT SYSTEM, HEAT PUMP, WATER SOURCE HEAT PUMP, ETC.

1. UNIT MARK NO. – LABEL WITH MARK NO. TO MATCH PLANS (TS-HP-1, TS-WHP-1, ETC.)

NOTE: ALL LABELS SHALL BE RIGID PLASTIC. LABEL ALL DEVICES, DUCTWORK, PIPING, VALVES, SENSORS, ACTUATORS, ETC.

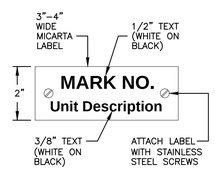

TYPICAL HVAC EQUIPMENT LABEL DETAIL

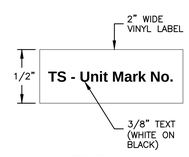

TYPICAL TEMP. SENSOR / THERMOSTAT LABEL DETAIL

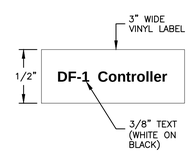

TYPICAL FAN CONTROLLER LABEL DETAIL

HVAC EQUIPMENT LABELING DETAILS

NOT TO SCALE

UNIT SUPPLY / GPTB HVAC DETAILS

WHORTON ENGINEERING, INC.
HVAC – PLUMBING – PROCESS CONTROL
RANDALL WHORTON, P.E.
PHONE: (256) 820-9897
25 SUMMERALL GATE ROAD
ANNISTON, ALABAMA 36205
WHORTON ENGINEERING PROJECT NO. 22164

SS&L ARCHITECTS
Montgomery | Dothan | Auburn | Huntsville | Pensacola
WWW.SSLARCH.COM | 256.285.1063

Rev.	Description	Date

Job Number: 21112
AL ARNG IFB #: AC-25-B-0006-S
Date: NOVEMBER 1, 2024
Drawn By: JH
Checked By: RDW

Project Title:
HUNTSVILLE READINESS CENTER
5180 MOORE'S MILL ROAD
HUNTSVILLE AL, 35811

Sheet Title: UNIT SUPPLY/GPTB HVAC DETAILS

Sheet Number: GM2.2

STATE OF ALABAMA
No.14192
PROFESSIONAL
ENGINEER
RANDALL D. WHORTON
11-05-2024

1. CONTRACTOR SHALL FURNISH AND INSTALL STRUCTURAL SUPPORTS REQUIRED TO INSTALL FAN IN ACCORDANCE WITH MANUFACTURER'S RECOMMENDATIONS. STRUCTURAL SUPPORTS SHALL BE SUBMITTED TO THE ARCHITECT FOR REVIEW AND APPROVAL.
2. EQUIPMENT SUPPORTS SHALL BE COORDINATED WITH STRUCTURAL AND METAL BUILDING DESIGNER/SUPPLIER.
3. COORDINATE HANGING HEIGHT, CLEARANCE REQUIREMENTS, AND FINAL LOCATION OF FAN WITH EQUIPMENT AND OTHER SYSTEMS TO ENSURE PROPER OPERATION.

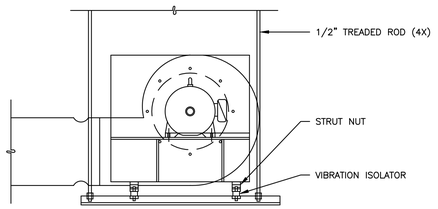

TYPICAL EXHAUST FAN HANGER DETAIL

NOT TO SCALE

EQUIPMENT SUPPORTS SHALL BE COORDINATED WITH STRUCTURAL AND METAL BUILDING DESIGNER/SUPPLIER.

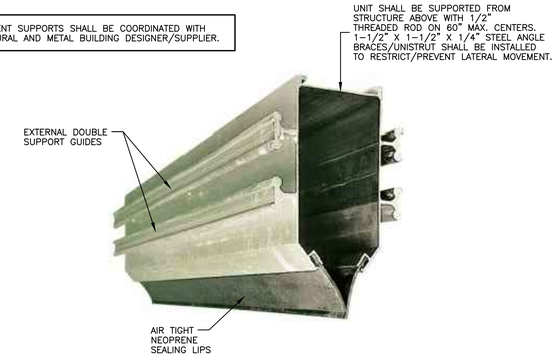

TYPICAL ARI-HETRA SLOTTED EXHAUST / SUCTION CHANNEL DETAIL

NOT TO SCALE

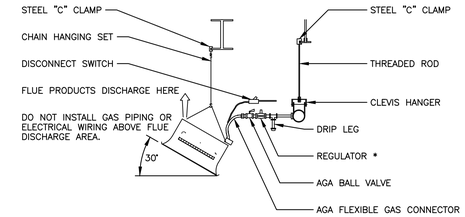

MAINTAIN ALL REQUIRED CLEARANCES AS SHOWN ON HEATER DATA PLATE. MANUFACTURER'S INSTRUCTIONS ARE TO TAKE PRECEDENCE WHEREVER ANY DISCREPANCY BETWEEN THOSE INSTRUCTIONS AND THIS SPECIFICATION MAY OCCUR.

*325-3 REGULATOR REQUIRED WHERE GAS SUPPLY PRESSURE EXCEEDS 14" WC.

TYPICAL GAS INFRA-RED HEATER INSTALLATION DETAIL

NOT TO SCALE

1. INCLUDES (2) 56"H BRACKETS AND (14) 12" ARMS
2. 1,000 LBS EVENLY DISTRIBUTED WEIGHT
3. 150 LBS PER TIER
4. BRACKETS CAN BE MOUNTED AS FAR APART AS NEEDED
5. HEAVY DUTY GALVANIZED STEEL CONSTRUCTION
6. INCLUDES MOUNTING HARDWARE

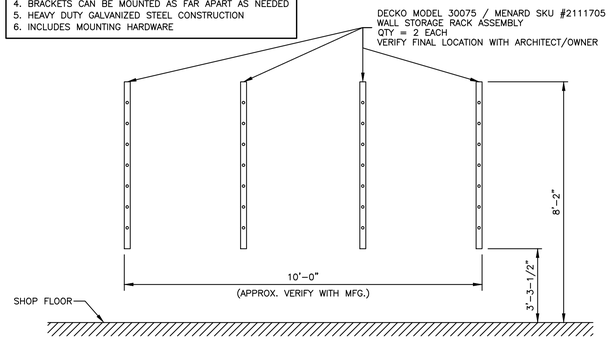

TYPICAL WALL MOUNTED HOSE RACK

NOT TO SCALE

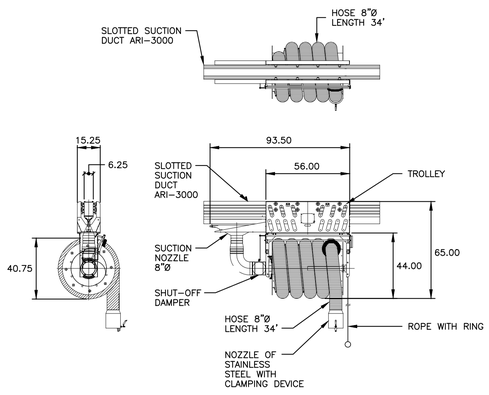

TYP. MOBILE HOSE REEL / SPRING DETAIL

NOT TO SCALE

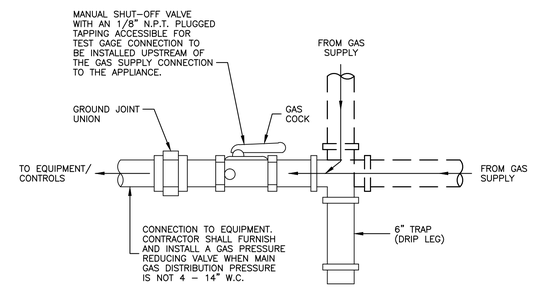

TYPICAL GAS CONNECTION TO EQUIPMENT DETAIL

NOT TO SCALE

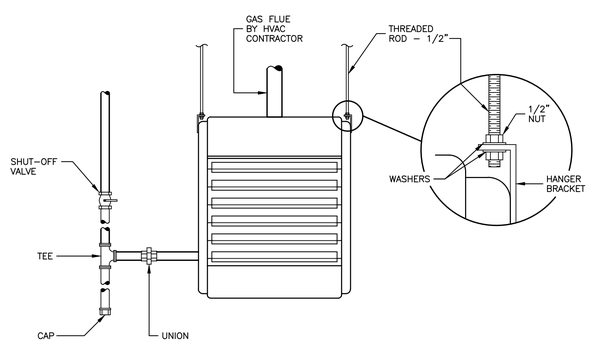

GAS-FIRED UNIT HEATER DETAIL

NOT TO SCALE

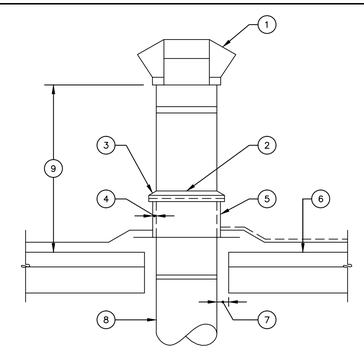

NOTES

1. UL-LISTED VENT CAP
2. STORM COLLAR
3. MASTIC OR CAULKING
4. 1/2" (13-MM) AIR SPACE
5. TALL CONE FLASHING
6. ROOF
7. 1-1/2" (38-MM) MINIMUM
8. UL-LISTED TYPE "B" VENT
9. HEIGHT AS REQUIRED BY CODE NOT LESS THAN 36" (91.5 CM)

GAS VENT THRU ROOF WITH VENT CAP DETAIL

NOT TO SCALE

UNIT SUPPLY / GPTB HVAC DETAILS

WHORTON ENGINEERING, INC.
HVAC - PLUMBING - PROCESS CONTROL
RANDALL WHORTON, P.E.
PHONE: (256) 820-9897
25 SUMMERALL GATE ROAD
ANNISTON, ALABAMA 36205
WHORTON ENGINEERING PROJECT NO. 22164

SS&L ARCHITECTS
Montgomery | Dothan | Auburn | Huntsville | Pensacola
WWW.SSLARCH.COM | 256.285.1063

Rev.	Description	Date

Job Number: 21112
AL ARNG IFB #: AC-25-B-0006-S
Date: NOVEMBER 1, 2024
Drawn By: JH
Checked By: RDW
Project Title:

HUNTSVILLE READINESS CENTER
5180 MOORE'S MILL ROAD
HUNTSVILLE AL, 35811

Sheet Title: UNIT SUPPLY/GPTB HVAC DETAILS

Sheet Number: GM2.3

ALABAMA LICENSED PROFESSIONAL ENGINEER No.14192 RANDALL D. WHORTON
11-05-2024

GAS UNIT HEATER SEQUENCE OF OPERATIONS

GAS UNIT HEATERS: ARE STARTED AND STOPPED BY DIRECT DIGITAL CONTROLLERS ON A REAL TIME BASIS, IN ACCORDANCE WITH THE SPECIFIED SOFTWARE PROGRAMS. A SPACE SENSOR WILL MAINTAIN THE HEATING SET POINT BY ENERGIZING THE STAGES OF HEAT TO MAINTAIN DESIRED SPACE TEMPERATURE.

WHEN SYSTEM IS PLACED IN THE "UNOCCUPIED" MODE OF OPERATION, THE CONTROLS ARE ENERGIZED WHEN SPACE TEMPERATURE DROPS BELOW ITS NIGHT SET BACK HEATING TEMPERATURE DROPS BELOW ITS NIGHT SET BACK HEATING TEMPERATURE SET POINTS.

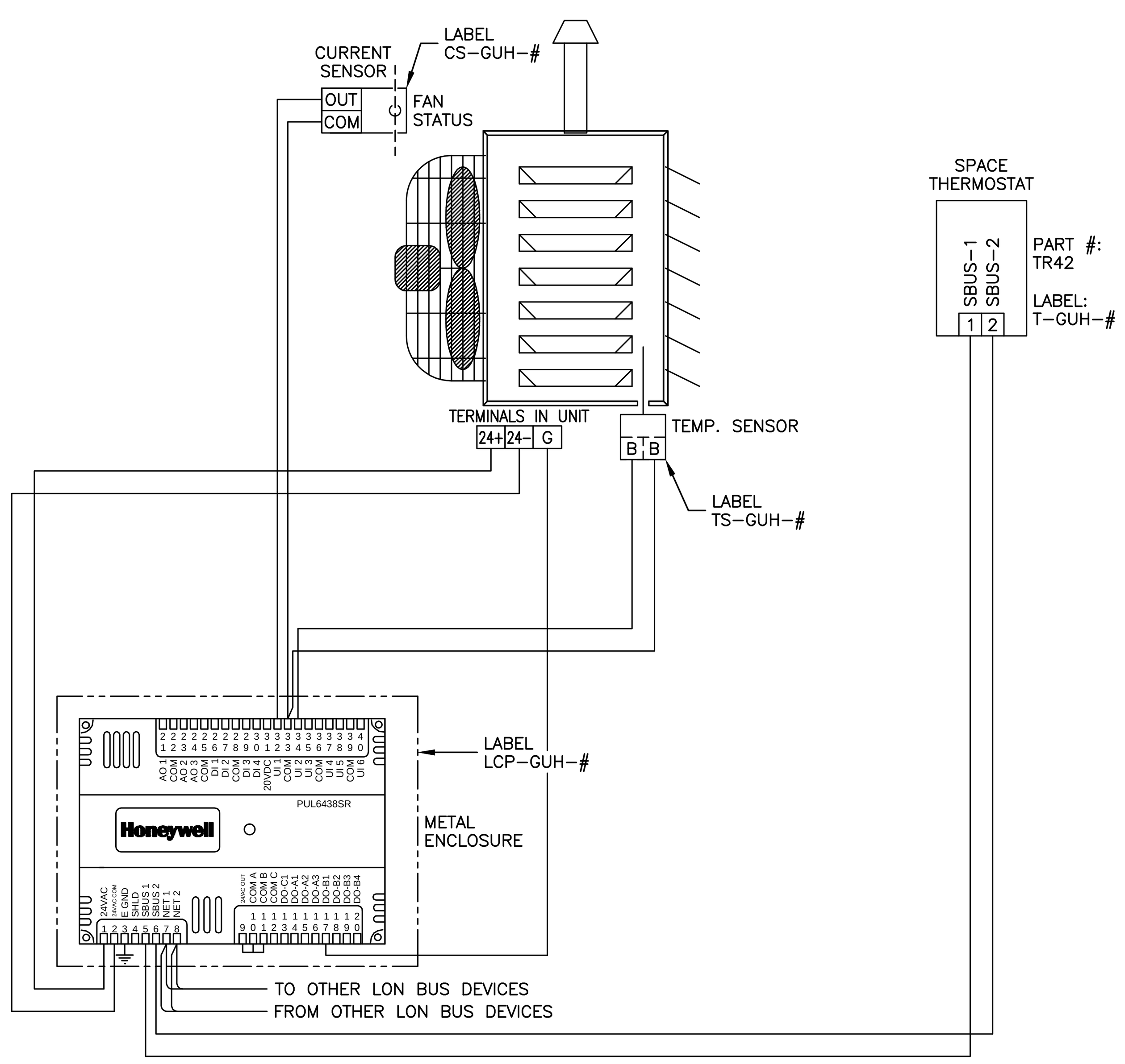

GAS UNIT HEATER CONTROLS DIAGRAM

NOT TO SCALE

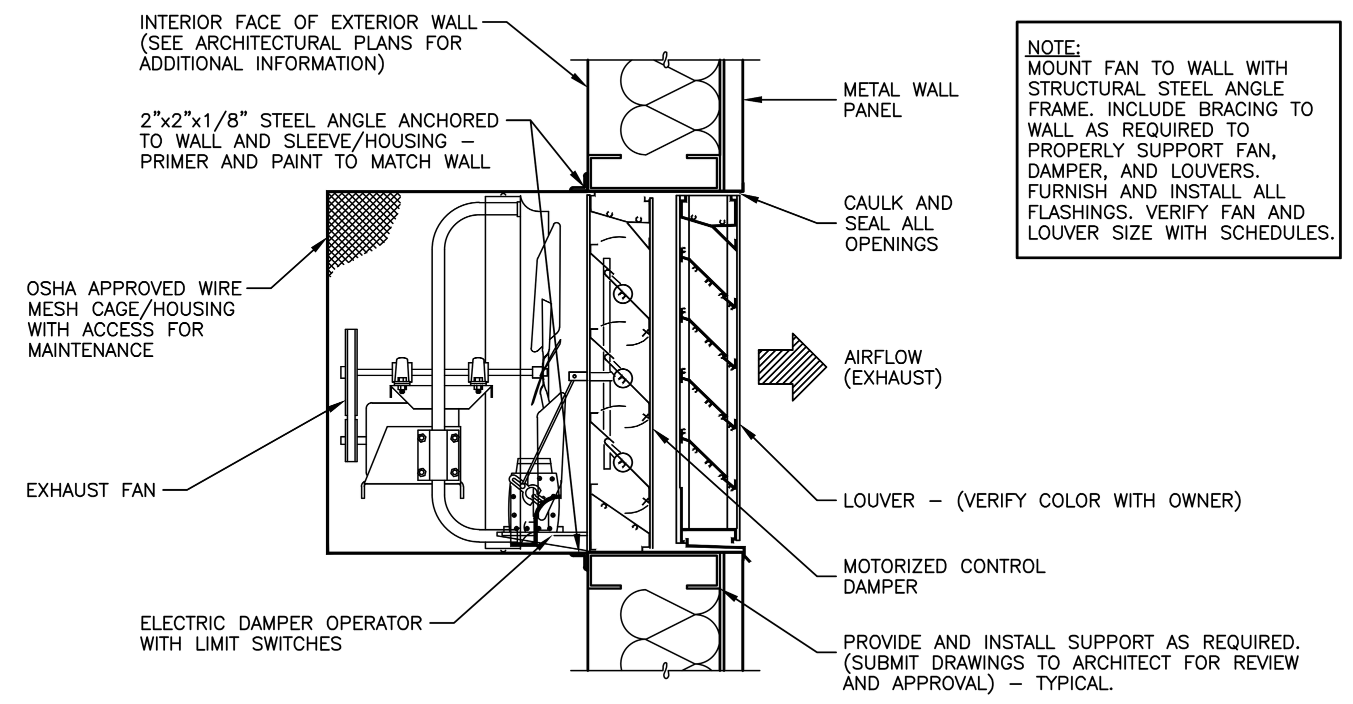

NOTE:
MOUNT FAN TO WALL WITH STRUCTURAL STEEL ANGLE FRAME. INCLUDE BRACING TO WALL AS REQUIRED TO PROPERLY SUPPORT FAN, DAMPER, AND LOUVERS. FURNISH AND INSTALL ALL FLASHINGS. VERIFY FAN AND LOUVER SIZE WITH SCHEDULES.

TYPICAL BELT DRIVEN WALL MOUNTED EXHAUST FAN WITH LOUVER / DAMPER DETAIL

NOT TO SCALE

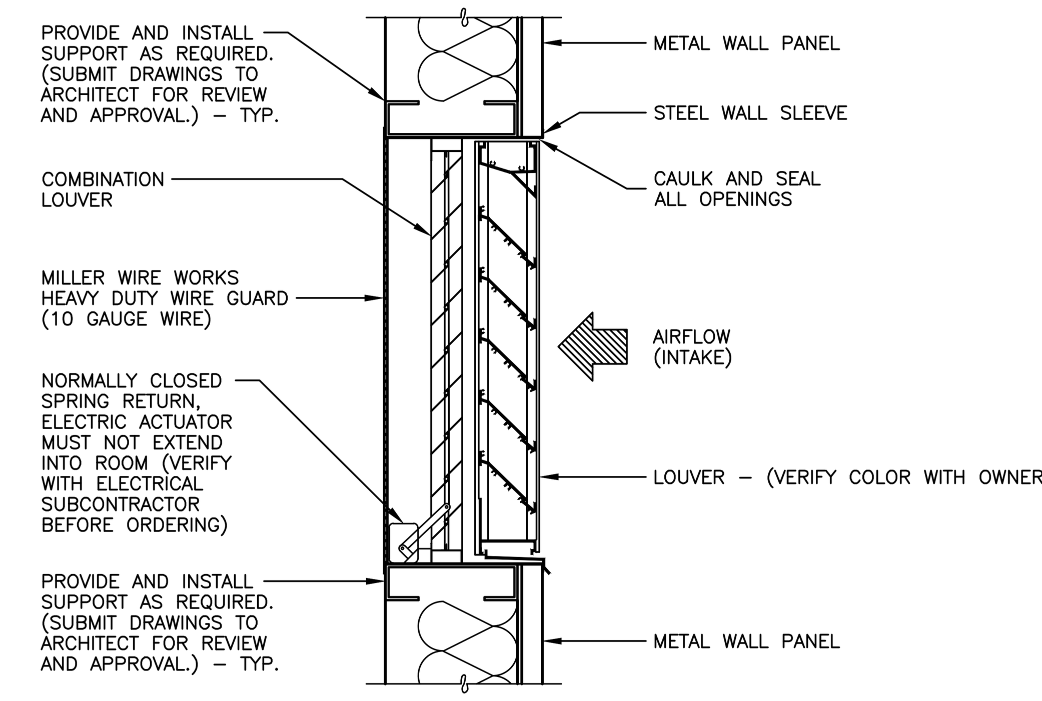

TYPICAL WALL MOUNTED AIR INTAKE LOUVER

NOT TO SCALE

GAS FIRED UNIT HEATER CONTROL SYSTEM POINT LIST

SYSTEM POINT DESCRIPTION		ANALOG														BINARY													SYSTEMS FEATURES																						NOTES
		INPUT											OUTPUT			INPUT								OUTPUT					ALARMS										PROGRAMS												
GAS FIRED UNIT HEATER	GRAPHIC	TEMPERATURE	PRESSURE	RH	KW	KWH	BTU HR	GPM	PERCENT	CFM	SETPOINT		DDC (4–20MA, 0–10VDC)		SETPOINT ADJ.	PNEU. TRANSDUCER	STATUS ON/OFF	FILTER STATUS	STATUS OPEN/CLOSED	STATUS	NO. OF STARTS	TIMED OVERRIDE		STATUS ON/OFF	OPEN/CLOSE	LOCK OUT	ENABLE/DISABLE		HIGH ANALOG	LOW ANALOG	HIGH BINARY	LOW BINARY	PROOF	SENSOR FAIL	FLOW FAIL	COMM. FAIL	DIAGNOSTICS		TIME SCHEDULING	OPTIMAL START/STOP	DEMAND LIMITING	RESET	EVENT PROGRAM	DDC	ALARM INSTRUCT	MAINT. WK. ORD.	RUN TIME	EXP. MESSAGE	SET BACK/SET UP		
HEATER ENABLE/DISABLE	X												X																																						
SPACE TEMPERATURE	X	X									X																																								
SUPPLY FAN	X																X							X											X																
DISCHARGE TEMPERATURE	X	X																											X	X				X																

GENERAL NOTES:

1. SET SPACE SENSOR TO ALLOW MANUAL ADJUSTMENT OF UP TO TWO DEGREES PLUS/MINUS.
2. FIELD VERIFY EXACT QUANTITY AND LOCATION.
3. UNIT TO INCLUDE DDC CONTROLS BASED ON HONEYWELL SPYDER PUL4024S OR PUL6438SR PROGRAMMABLE CONTROLLER WITH HONEYWELL TR-42 THERMOSTAT.

UNIT SUPPLY / GPTB HVAC DETAILS

WHORTON ENGINEERING, INC.
HVAC – PLUMBING – PROCESS CONTROL
RANDALL WHORTON, P.E.
PHONE: (256) 820-9897
25 SUMMERALL GATE ROAD
ANNISTON, ALABAMA 36205
WHORTON ENGINEERING PROJECT NO. 22164

SS&L ARCHITECTS
Montgomery | Dothan | Auburn | Huntsville | Pensacola
WWW.SSLARCH.COM | 256.285.1063

Rev.	Description	Date

Job Number: 21112
AL ARNG IFB #: AC-25-B-0006-S
Date: NOVEMBER 1, 2024
Drawn By: JH
Checked By: RDW

Project Title: HUNTSVILLE READINESS CENTER
5180 MOORE'S MILL ROAD
HUNTSVILLE AL, 35811

Sheet Title: UNIT SUPPLY / GPTB HVAC DETAILS

Sheet Number: GM2.4

No.14192 PROFESSIONAL ENGINEER RANDALL D. WHORTON

11-05-2024

EXHAUST FAN CONTROL SYSTEM POINT LIST

SYSTEM POINT DESCRIPTION	ANALOG INPUT												ANALOG OUTPUT				BINARY INPUT							BINARY OUTPUT					SYSTEMS FEATURES ALARMS								SYSTEMS FEATURES PROGRAMS													NOTES
EXHAUST FAN	GRAPHIC	TEMPERATURE	PRESSURE	RH	KW	KWH	BTU HR	GPM	PERCENT	CFM	SETPOINT		DDC (4-20MA, 0-10VDC)		SETPOINT ADJ.		PNEU. TRANSDUCER	STATUS ON/OFF	FILTER STATUS	STATUS OPEN/CLOSED	STATUS	NO. OF STARTS	TIMED OVERRIDE		OFF/ON	OPEN/CLOSE	LOCK OUT	ENABLE/DISABLE	LOCAL/REMOTE	HIGH ANALOG	LOW ANALOG	HIGH BINARY	LOW BINARY	PROOF	SENSOR FAIL		FLOW FAIL	COMM. FAIL	DIAGNOSTICS		TIME SCHEDULING	OPTIMAL START/STOP	DEMAND LIMITING	RESET	EVENT PROGRAM	DDC	ALARM INSTRUCT	MAINT. WK. ORD.	RUN TIME	EXP. MESSAGE	SET BACK/SET UP	NIGHT PURGE	TENANT BILLING		
CONTROL PANEL	X												X								X							X									X				X				X		X						

GAS INFRARED UNIT HEATER CONTROL SYSTEM POINT LIST

SYSTEM POINT DESCRIPTION	ANALOG INPUT												ANALOG OUTPUT				BINARY INPUT							BINARY OUTPUT					SYSTEMS FEATURES ALARMS								SYSTEMS FEATURES PROGRAMS													NOTES
INFRARED GAS UNIT HEATER	GRAPHIC	TEMPERATURE	PRESSURE	RH	KW	KWH	BTU HR	GPM	PERCENT	CFM	SETPOINT		DDC (4-20MA, 0-10VDC)		SETPOINT ADJ.		PNEU. TRANSDUCER	STATUS ON/OFF	FILTER STATUS	STATUS OPEN/CLOSED	STATUS	NO. OF STARTS	TIMED OVERRIDE		OFF/ON	OPEN/CLOSE	LOCK OUT	ENABLE/DISABLE	LOCAL/REMOTE	HIGH ANALOG	LOW ANALOG	HIGH BINARY	LOW BINARY	PROOF	SENSOR FAIL		FLOW FAIL	COMM. FAIL	DIAGNOSTICS		TIME SCHEDULING	OPTIMAL START/STOP	DEMAND LIMITING	RESET	EVENT PROGRAM	DDC	ALARM INSTRUCT	MAINT. WK. ORD.	RUN TIME	EXP. MESSAGE	SET BACK/SET UP	NIGHT PURGE	TENANT BILLING		
CONTROL PANEL	X												X								X							X									X				X				X		X						
SPACE TEMP.	X	X									X																																										
DISCHARGE TEMP.	X	X																																																			

(1) SET SPACE SENSOR TO ALLOW MANUAL ADJUSTMENT OF UP TO FOUR DEGREES PLUS/MINUS.

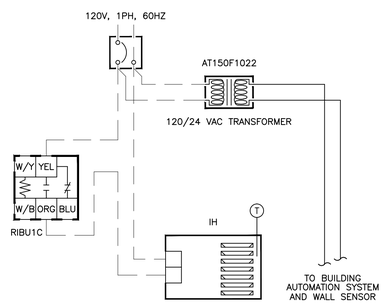

SEQUENCE OF OPERATIONS

GAS INFRA-RED UNIT HEATERS ARE STARTED AND STOPPED BY DIRECT DIGITAL CONTROLLERS ON A REAL TIME BASIS, IN ACCORDANCE WITH THE SPECIFIED SOFTWARE PROGRAMS.

A SPACE SENSOR WILL MAINTAIN THE HEATING SET POINT BY ENERGIZING THE STAGES OF HEAT TO MAINTAIN DESIRED SPACE TEMPERATURE.

WHEN SYSTEM IS PLACED IN THE "UNOCCUPIED" MODE OF OPERATION, THE CONTROLS ARE ENERGIZED WHEN SPACE TEMPERATURE DROPS BELOW ITS NIGHT SET BACK HEATING TEMPERATURE SET POINTS.

(T) = DISCHARGE AIR TEMPERATURE SENSOR

TYPICAL GAS INFRARED UNIT HEATER / IH CONTROL

NOT TO SCALE

EXHAUST FAN CONTROL RELAYS SHALL BE WIRED TO THE NORMALLY CLOSED CONTACTS TO ALLOW THE FANS TO OPERATE IN THE EVENT THAT THE DDC CONTROLS ARE OFFLINE. EXHAUST FANS SHALL BE CONTROLLED BY THE BUILDING SCHEDULE.

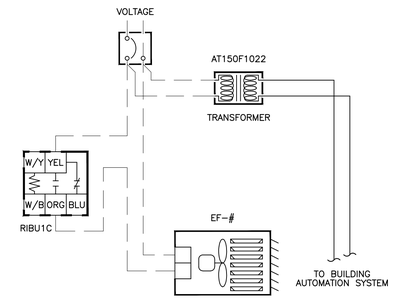

EXHAUST FAN CONTROLS DIAGRAM

NOT TO SCALE

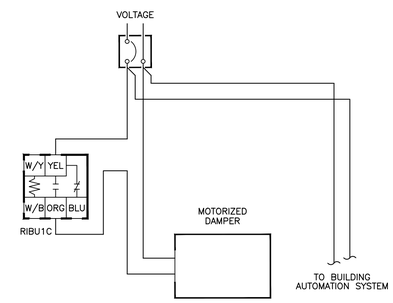

MOTORIZED LOUVER CONTROLS DIAGRAM

NOT TO SCALE

UNIT SUPPLY / GPTB HVAC DETAILS

WHORTON ENGINEERING, INC.
HVAC – PLUMBING – PROCESS CONTROL
RANDALL WHORTON, P.E.
PHONE: (256) 820-9897
25 SUMMERALL GATE ROAD
ANNISTON, ALABAMA 36205
WHORTON ENGINEERING PROJECT NO. 22164

SS&L ARCHITECTS
Montgomery | Dothan | Auburn | Huntsville | Pensacola
WWW.SSLARCH.COM | 256.285.1063

Rev.	Description	Date

Job Number: 21112
AL ARNG IFB #: AC-25-B-0006-S
Date: NOVEMBER 1, 2024
Drawn By: JH
Checked By: RDW

Project Title:
HUNTSVILLE READINESS CENTER
5180 MOORE'S MILL ROAD
HUNTSVILLE AL, 35811

Sheet Title: UNIT SUPPLY/GPTB HVAC DETAILS

Sheet Number: GM2.5

11-05-2024

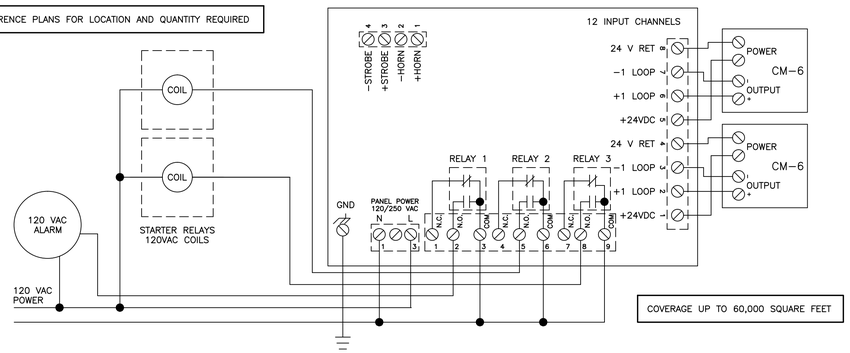

CARBON MONOXIDE CONTROL PANEL (MACURCO DVP-120) TYP. CONNECTION DIAGRAM

(OR APPROVED EQUAL) NOT TO SCALE

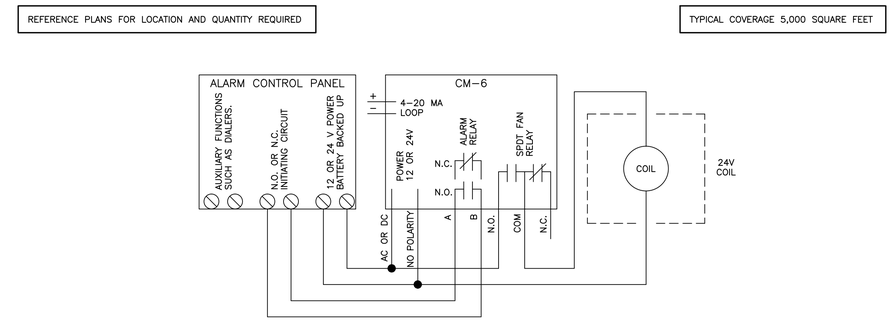

CARBON MONOXIDE DETECTOR (MACURCO CM-6) TYP. CONNECTION DIAGRAM

(OR APPROVED EQUAL) NOT TO SCALE

WATER TO AIR - WATER SOURCE HEAT PUMP CONTROL SYSTEM POINT LIST

SYSTEM POINT DESCRIPTION	ANALOG INPUT					ANALOG OUTPUT				BINARY INPUT					BINARY OUTPUT				SYSTEMS FEATURES: ALARMS								SYSTEMS FEATURES: PROGRAMS											NOTES
GEOTHERMAL HEAT PUMP	GRAPHIC	TEMPERATURE	RH	SETPOINT	SETPOINT HT/CL	CFM				SETPOINT ADJ.	DAMPER CONTROL				STATUS HI/LOW	ENABLE/DISABLE	TIMED OVERRIDE	CANCEL	STATUS			OFF/ON	OPEN/CLOSE	ENABLE/DISABLE	GENERAL ALARM		HIGH ANALOG	LOW ANALOG	BINARY	LATCH DIAGNOSTICS	SENSOR FAIL	COMM. FAIL	DIAGNOSTICS	HIGH CONDENSATE		TIME SCHEDULING	OPTIMAL START/STOP	DEMAND LIMITING	RESET	EVENT PROGRAM	ALARM INSTRUCT	MAINT. WK. ORD.	RUN TIME	EXP. MESSAGE	SET BACK/SET UP	NIGHT PURGE	MORNING WU/CD	RAND. START/STOP	
CONTROL PANEL	X																		X					X								X	X							X						X	X	
COMPRESSOR	X															X						X							X			X										X					X	
SUPPLY FAN	X														X							X							X													X						
WATER PUMP/VALVE	X																					X																										
REVERSING VALVE	X																					X																										
ZONE SENSOR	X	X		X	X												X	X									X	X		X		X											X					
DISCHARGE AIR	X	X																									X	X		X	X																	
LEAVING WATER	X	X																									X	X		X	X																	
EWT/RETURN AIR	X	X																									X	X		X	X																	
MIXED AIR TEMP. RETURN AIR TEMP.	X	X																									X	X		X	X																	
DIRTY FILTER	X																		X																													
CONDENSATE OVERFLOW	X														X															X								X		X								
OUTSIDE AIR TEMP.	X	X																									X	X			X		X															
CONDENSATE MOISTURE SENSOR	X														X												X					X	X	X														
DRAIN PAN SENSOR	X														X												X					X	X	X														

GENERAL NOTES:

1. SOME WATER SOURCE HEAT PUMPS FRESH AIR MOTORIZED DAMPERS SHALL BE CONTROLLED BY A CO2 DETECTOR TO MODULATE OUTSIDE AIR. REFERENCE PLANS FOR LOCATIONS.

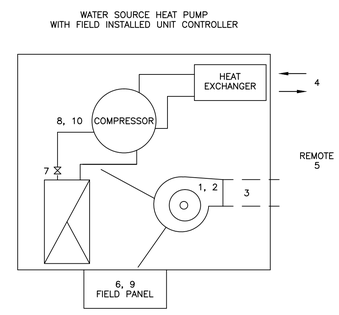

		AI	AO	BI	BO
1.	SUPPLY FAN START/STOP				X
2.	SUPPLY FAN STATUS			X	
3.	SUPPLY AIR TEMPERATURE	X			
4.	LEAVING WATER TEMPERATURE	X			
5.	ZONE TEMPERATURE	X			
6.	ZONE SETPOINT		X		
7.	REVERSING VALVE				X
8.	COMPRESSOR 1 STATUS			X	
9.	COMMUNICATION STATUS			X	
10.	COMPRESSOR 1 START/STOP				X

WATER TO AIR WATER SOURCE HEAT PUMP CONTROLS

NOT TO SCALE

UNIT SUPPLY / GPTB HVAC DETAILS

WHORTON ENGINEERING, INC.
HVAC – PLUMBING – PROCESS CONTROL
RANDALL WHORTON, P.E.
PHONE: (256) 820-9897
25 SUMMERALL GATE ROAD
ANNISTON, ALABAMA 36205

WHORTON ENGINEERING PROJECT NO. 22164

ALABAMA LICENSED PROFESSIONAL ENGINEER No.14192 RANDALL D. WHORTON 11-05-2024

SS&L ARCHITECTS
Montgomery | Dothan | Auburn | Huntsville | Pensacola
WWW.SSLARCH.COM | 256.285.1063

Rev.	Description	Date

Job Number: 21112
AL ARNG IFB #: AC-25-B-0006-S
Date: NOVEMBER 1, 2024
Drawn By: JH
Checked By: RDW
Project Title:

HUNTSVILLE READINESS CENTER
5180 MOORE'S MILL ROAD
HUNTSVILLE AL, 35811

Sheet Title: UNIT SUPPLY/GPTB HVAC DETAILS

Sheet Number: GM2.6

UNIT SUPPLY / GPTB
BUILDING AUTOMATION SYSTEM
INTER-TRADE RESPONSIBILITY MATRIX

FMS = FACILITY MANAGEMENT SYSTEM/BUILDING AUTOMATION SYSTEM CONTRACTOR
23 = DIVISION 23 CONTRACTOR (PLUMBING OR HVAC)
26 = DIVISION 26 CONTRACTOR (ELECTRICAL OR FIRE ALARM CONTRACTOR)

	WORK	FURNISH	INSTALL	LOW VOLTAGE WIRE AND CONDUIT	LINE POWER AND CONDUIT
1	DUCT SMOKE DETECTORS (SHOWN ON PLANS)	26	23	FMS	26
2	AUTOMATION DAMPERS	FMS	23	FMS	FMS
3	MANUAL VALVES, DAMPERS	23	23		
4	AUTOMATIC VALVES	FMS	23	FMS	FMS
5	PIPE INSERTION DEVICES AND TAPS INCLUDING THERMOWELLS FLOW AND PRESSURE STATIONS, ETC REQUIRING DDC INTERFACE.	FMS	23	FMS	FMS
6	PIPE INSERTION DEVICES AND TAPS INCLUDING THERMOWELLS FLOW AND PRESSURE STATIONS, ETC. NOT REQUIRING DDC INTERFACE.	23	23		
7	PUMP FLOW SWITCHES	23	23	FMS	
8	GEOTHERMAL HEAT PUMP CONTROLLERS	FMS	FMS	FMS	26
9	GEOTHERMAL HEAT PUMP WATER PUMP	23	23	FMS	FMS
10	THERMOSTATS AND HUMIDISTATS	FMS	FMS	FMS	
11	WATER TREATMENT SYSTEM	23	23	23	26
12	VARIABLE FREQUENCY DRIVES	FMS	23	FMS	26
13	FMS LOW VOLTAGE AND COMMUNICATION WIRING	FMS	FMS	FMS	
14	FMS CONDUITS AND RACEWAY	FMS	FMS	FMS	
15	CONTROL RELAYS	FMS	FMS	FMS	
16	FMS NETWORK ROUTERS, BRIDGES, HUBS AND ASSOCIATED CABLING	FMS	FMS	FMS	
17	FMS NODES, EQUIPMENT, HOUSINGS, ENCLOSURES AND PANELS AND POWER FROM DIV. 26 PANELS	FMS	FMS	FMS	FMS
18	THERMOSTAT/HUMIDISTAT/CO2 DETECTOR FOR CONTROL OF FRESH AIR MOTORIZED DAMPERS	FMS	23	FMS	FMS
19	FMS SOFTWARE, FIRMWARE AND PROJECT SPECIFIC SOFTWARE CONFIGURATIONS AND DATABASE ENTRIES	FMS	FMS	FMS	
20	OUTSIDE AIR UNIT CONTROLLERS	23	FMS	FMS	26
21	OUTSIDE AIR UNIT WATER PUMP	23	23	FMS	FMS
22	CEILING HEATER CONTROLLERS	23	23	26	26
23	MOTORIZED DAMPERS	FMS	23	FMS	FMS
24	EXHAUST FAN CONTROLS AND SUPPLY FAN CONTROLS	FMS	FMS	FMS	26
25	SPLIT SYSTEM CONTROLLERS, DEHUMIDIFIER CONTROLLERS	FMS	FMS	FMS	26
26	AIR HANDLING UNIT CONTROLLERS	FMS	FMS	FMS	26
27	POWER SUB-METERS	FMS	FMS	FMS	
28	DOMESTIC WATER HEATER/PUMP CONTROLS	FMS	FMS	FMS	26
29	VARIABLE REFRIGERANT FLOW UNIT CONTROLLERS	23	FMS	FMS	26
30	OCCUPANCY SENSORS	FMS	FMS	FMS	FMS
31	CARBON MONOXIDE DETECTOR/ALARM	FMS	FMS	FMS	

1. SMOKE DETECTORS MUST BE COORDINATED WITH THE FIRE ALARM CONTRACTOR.
2. THE ABOVE MATRIX IS FURNISHED BY THE ENGINEER OF RECORD AS A GUIDE FOR THE CONTRACTOR'S USE. THE CONTRACTOR SHALL SUBMIT A RESPONSIBILITY MATRIX BASED UPON THE CONTRACTOR'S PROJECT COORDINATION AND BID PREPARATION. THE CONTRACTOR SHALL PREPARE AND SUBMIT A FINAL MATRIX OF THE COORDINATED RESPONSIBILITIES OF THE REQUIRED TRADES WITH PROJECT SUBMITTALS AND SUB-CONTRACTORS IDENTIFIED BY NAME, ADDRESS, ETC.

UNIT SUPPLY / GPTB
DDC SYSTEM NOTES

1. INTERFACE ALL EQUIPMENT INTO THE BUILDING AUTOMATION SYSTEM. GRAPHICS, FLOOR PLANS, EQUIPMENT GRAPHICS, ETC. SHALL BE PROVIDED IN THE BUILDING AUTOMATION SYSTEM TO COORDINATE WITH PLANS.
2. ALL UNITS SHALL BE PROGRAMMED FOR OCCUPIED MODE, OCCUPIED STANDBY, AND UNOCCUPIED MODE. LIGHTING OCCUPANCY SENSORS SHALL BE TIED INTO BUILDING AUTOMATION SYSTEM TO PLACE UNITS IN OCCUPIED MODE, OCCUPIED STANDBY MODE, OR UNOCCUPIED MODE.
3. ALL VARIABLE REFRIGERANT FLOW UNITS SHALL BE COMPLETELY INTERFACED TO THE BUILDING AUTOMATION SYSTEM. BUILDING AUTOMATION SYSTEM SHALL BE CAPABLE OF ADJUSTING SETPOINTS, PROGRAMMING OCCUPIED/UNOCCUPIED CONDITIONS FOR HOLIDAYS, WEEKDAYS, WEEKENDS, ETC. THE BUILDING AUTOMATION SYSTEM SHALL BE CAPABLE OF LIMITING ROOM OVERRIDES TO +/- 4 DEGREES (ADJUSTABLE).
4. INTERFACE ALL LIGHTING CIRCUITS OR OCCUPANCY SENSORS IN ANY GIVEN ZONE TO THE DDC CONTROLS FOR THE HVAC UNIT SERVING THAT ZONE. THE HVAC UNIT CONTROLS SHALL PROVIDE A STATUS POINT INDICATING THE STATE OF THE ZONE OCCUPANCY. FOR ALL ZONES, THE OCCUPANCY SENSOR SHALL PLACE THE HVAC UNIT IN STANDBY MODE WHEN THE ZONE IS UNOCCUPIED. OCCUPIED AND UNOCCUPIED MODES ARE CONTROLLED BY THE BUILDING SCHEDULE.
5. BUILDING AUTOMATION CONTRACTOR SHALL INSTALL POWER SUB-METER FOR INTERFACE WITH THE BUILDING AUTOMATION SYSTEM TO OBTAIN TOTAL ENERGY ON THE BUILDING.
6. POWER SUB-METER INSTALLATION SHALL BE INSTALLED BETWEEN POWER METER AND BLDG. ENTRANCE AT BUILDING EXTERIOR. SUB-METER MUST BE LABELED "CUSTOMER OWNED". COORDINATE INSTALLATION WITH LOCAL UTILITY OFFICE. FIELD VERIFY EXACT LOCATION. REFERENCE PLUMBING PLANS FOR ADDITIONAL INFORMATION.
7. ALL EXHAUST FANS, SUPPLY FANS, ETC. SHALL BE INTERFACED TO THE BUILDING AUTOMATION SYSTEM. BUILDING AUTOMATION SYSTEM SHALL BE CAPABLE OF ON/OFF CONTROL OF FANS.
8. ALL NEW FRESH AIR MOTORIZED DAMPERS SHALL BE CONTROLLED BY THE BUILDING AUTOMATION SYSTEM WITH OCCUPANCY SCHEDULE.
9. ALL CONTROLS COMPONENTS INCLUDING SENSORS, DAMPERS, ETC. SHALL BE LABELED TO MATCH CONTROL DRAWINGS.
10. ALL I.P. ADDRESSES SHALL BE LABELED.
11. ALL CONTROL PANELS SHALL BE LABELED.
12. LAMINATED CONTROL DRAWINGS SHALL BE INSTALLED AT CONTROL JACE PANELS.
13. ALL JACE CONTROL PANELS AND VRF MASTER CONTROL PANEL SHALL INCLUDE BATTERY BACKUP UPS.
14. EXHAUST FAN CONTROL RELAYS SHALL BE WIRED TO THE NORMALLY CLOSED CONTACTS TO ALLOW THE FANS TO OPERATE IN THE EVENT THAT THE DDC CONTROLS ARE OFFLINE. EXHAUST FANS SHALL BE CONTROLLED BY THE BUILDING SCHEDULE.
15. COORDINATE DDC CONTROLLER TERMINAL ASSIGNMENTS WITH AANG DDC STANDARDS AND PRACTICES.
16. DDC CONTROLS AS-BUILT DRAWINGS SHALL INCLUDE COLOR CODES FOR ALL MULTI-CONDUCTOR CABLES.
17. CARBON MONOXIDE DETECTORS SHALL BE MACURCO MODEL CM-6 (OR APPROVED EQUAL).
18. ALL CONTROL DEVICES SHOWN ON THE CONTROL DIAGRAMS SHALL BE FURNISHED BY THE FMS CONTRACTOR UNLESS OTHERWISE NOTED OR SPECIFIED.
19. ALL COMPONENTS REQUIRED FOR THE SEQUENCES OF OPERATION, SHOWN AND/OR DESCRIBED ON THE CONTROL DIAGRAMS AND/OR SPECIFICATIONS, OR AS REQUIRED FOR A PROPERLY OPERATING SYSTEM SHALL BE FURNISHED AND INSTALLED BY THE FMS CONTRACTOR UNLESS OTHERWISE NOTED.
20. FMS CONTRACTOR IS RESPONSIBLE TO FURNISH, INSTALL, AND WIRE ALL COMPONENTS REQUIRED FOR INTEGRATION OF INFORMATION SHOWN TO BE ACCESSED BY THE FMS FROM OTHER SYSTEMS AND EQUIPMENT UNLESS OTHERWISE BE NOTED OR SPECIFIED.
21. ALL POWER WIRING AND TRANSFORMERS FOR SENSORS, ACTUATORS, AND OTHER CONTROL COMPONENTS AS REQUIRED FOR THE FMS AND/OR DDC SYSTEMS TO FUNCTION PROPERLY, SHALL BE FURNISHED AND INSTALLED BY THE FMS CONTRACTOR UNLESS OTHERWISE SHOWN, NOTED, OR SPECIFIED.
22. ALL POWER WIRING FOR SENSORS, ACTUATORS, AND OTHER DEVICES SHALL BE FROM THE DDC PANEL OR THE FMS/BAS PANEL OF THE ASSOCIATED SYSTEM.
23. ALL CONTROL, INTERLOCK, AND POWER WIRING SHALL BE INSTALLED PER THE ELECTRICAL SPECIFICATION, LOCAL, STATE, AND NATIONAL CODES. RACEWAY SHALL BE INSTALLED PER THE ELECTRICAL SPECIFICATIONS.
24. ALL CONTROL POINTS SHOWN ON THE CONTROL DIAGRAMS SHALL BE PROVIDED AND INTEGRATED INTO A FMS/BAS SYSTEM GRAPHIC REPRESENTATIVE OF THE CONTROL DIAGRAMS.
25. ALL CONTROL BANDS, SETPOINTS, SETPOINT LIMITS, SETPOINT INCREMENT VALUES, SETPOINT DECREMENT VALUES, ALARM LIMITS, AND OTHER PARAMETERS SHALL BE ADJUSTABLE FROM THE FMS/BAS.
26. ALL SETPOINTS SHALL BE ADJUSTABLE FROM THE FMS/BAS SYSTEM GRAPHIC(S).
27. SPACE SETPOINTS SHALL BE ADJUSTABLE FROM THE ROOM SENSOR UNLESS OTHERWISE SHOWN ON DRAWINGS OR SPECIFIED.
28. THE FMS/BAS SYSTEM GRAPHICS SHALL BE LINKED WITH ASSOCIATED BUILDING FLOOR PLANS FROM THE SPACE SENSOR OR AREA SERVED.
29. WHERE ONE SYSTEM IS ASSOCIATED WITH ANOTHER SYSTEM, THE SYSTEM GRAPHIC SHALL BE LINKED TO THE ASSOCIATED GRAPHIC AS WELL AS THE BUILDING FLOOR PLAN GRAPHIC. EXAMPLE - A WATER SOURCE/GEOTHERMAL HEAT PUMP UNIT SYSTEM GRAPHIC SHALL BE LINKED TO THE LOOP WATER SYSTEM GRAPHIC IN ADDITION TO BOTH BEING LINKED TO THE BUILDING FLOOR PLAN.
30. THE BUILDING FLOOR PLAN SHALL DISPLAY THE SPACE TEMPERATURE AT EACH SPACE SENSOR LOCATION WITH AREA SERVED DISPLAYED IN SEPARATE COLORS BASED ON THE CONDITION OF THE ZONE. EXAMPLE - ALARM, NORMAL, HIGH OR LOW TEMPERATURE, HIGH OR LOW HUMIDITY, ETC.
31. ALL BUILDING FLOOR PLANS AND SYSTEM GRAPHICS SHALL DISPLAY OUTSIDE AIR TEMPERATURE AND HUMIDITY.
32. THE FLOOR PLAN GRAPHICS SHALL BE LINKED TO A BUILDING GRAPHIC WITH A DIGITAL PHOTOGRAPH BACKGROUND OF THE ACTUAL BUILDING. DURING CONSTRUCTION A TEMPORARY GRAPHICS MAY BE USED THAT IS REPRESENTATIVE OF THE BUILDING.
33. ALL GRAPHICS SHALL BE SUBMITTED IN COLOR WITH THE FMS/BAS SUBMITTAL.
34. EMERGENCY AIR DISTRIBUTION SHUTOFF SWITCH SHALL BE FURNISHED AND INSTALLED AS PART OF THE HVAC CONTROL SYSTEM. EMERGENCY SHUTOFF SWITCH SHALL IMMEDIATELY SHUT DOWN THE AIR DISTRIBUTION SYSTEM THROUGHOUT THE BUILDING. REFERENCE PLANS FOR SHUTOFF SWITCH LOCATION. SHUTOFF SWITCH SHALL BE LABELED "EMERGENCY HVAC SHUTOFF SWITCH". SHUTOFF SWITCH SHALL NOT BE THE SAME COLOR AS THE FIRE ALARM STATIONS. ALL OUTSIDE AIR DAMPERS SHALL CLOSE WHEN EMERGENCY SHUTOFF SWITCH IS ACTIVATED.
35. CONTRACTOR SHALL SUBMIT SCREENSHOTS OF THE CONTROLS GRAPHICS A MINIMUM OF SEVENTY-TWO (72) HOURS PRIOR TO REVIEW FOR SUBSTANTIAL COMPLETION.
36. A SEPARATE DEDICATED JACE CONTROL PANEL IS REQUIRED FOR THE UNIT SUPPLY/GPTB BUILDING. SEE PLANS FOR LOCATION.

UNIT SUPPLY / GPTB
HVAC DETAILS

WHORTON ENGINEERING, INC.
HVAC - PLUMBING - PROCESS CONTROL
RANDALL WHORTON, P.E.
PHONE: (256) 820-9897
25 SUMMERALL GATE ROAD
ANNISTON, ALABAMA 36205

WHORTON ENGINEERING PROJECT NO. 22164

SS&L ARCHITECTS
Montgomery | Dothan | Auburn | Huntsville | Pensacola
WWW.SSLARCH.COM | 256.285.1063

Rev.	Description	Date

Job Number: 21112
AL ARNG IFB #: AC-25-B-0006-S
Date: NOVEMBER 1, 2024
Drawn By: JH
Checked By: RDW
Project Title

HUNTSVILLE READINESS CENTER
5180 MOORE'S MILL ROAD
HUNTSVILLE AL, 35811

Sheet Title
UNIT SUPPLY/GPTB
HVAC DETAILS

Sheet Number
GM2.7

ALABAMA LICENSED PROFESSIONAL ENGINEER No.14192 RANDALL D. WHORTON
11-05-2024

UNIT SUPPLY / GPTB
2021 IMC TABLE 403.3 COMPLIANCE CALCULATIONS

ROOM NAME	AREA (SF)	PEOPLE (QTY)	OUTDOOR AIR CALCULATIONS			EZ	VOZ CFM	VPZ CFM	ZP VOZ/VPZ	EV	VOT	REQUIRED OSA CFM	DESIGN OSA CFM	EXHAUST AIR					UNIT
			PEOPLE (CFM/PERSON)	AREA (CFM/SF)	TOTAL (VOU)									CFM/SF	FIXTURES	UNIT	REQUIRED CFM	DESIGN CFM	
SUPPLY ROOM	1,231	1	5.0	0.06	79	0.8	99	750	0.13	1	79	79	85						GHP-G1
SUPPLY ROOM	1,231	1	5.0	0.06	79	0.8	99	750	0.13	1	79	79	85						GHP-G2
VAULT	635	1	5.0	0.06	43	0.8	54					54	60						GHP-G3
VAULT	635	1	5.0	0.06	43	0.8	54					54	60						GHP-G4
OFFICE	144	1	5.0	0.06	14	0.8	17					17	20						GHP-G5
OFFICE	144	1	5.0	0.06	14	0.8	17					17	20						GHP-G6
CORRIDOR	684	0	0.0	0.06	41	0.8	51	400	0.13										GHP-G7
FM STORAGE	133	1	5.0	0.06	13	0.8	16	125	0.13										GHP-G7
TOTAL (GHP-G7)	817				54					1	54	54	60						GHP-G7
OPEN OFFICE	1,099	8	5.0	0.06	106	0.8	132					132	135						GHP-G8
OFFICE	135	1	5.0	0.06	13	0.8	16					16	20						GHP-G9
OFFICE	135	1	5.0	0.06	13	0.8	16					16	20						GHP-G10
OFFICE	135	1	5.0	0.06	13	0.8	16					16	20						GHP-G11
OFFICE	135	1	5.0	0.06	13	0.8	16					16	20						GHP-G12
OPEN OFFICE	1,099	8	5.0	0.06	106	0.8	132					132	135						GHP-G13
OFFICE	135	1	5.0	0.06	13	0.8	16					16	20						GHP-G14
OFFICE	135	1	5.0	0.06	13	0.8	16					16	20						GHP-G15
OFFICE	135	1	5.0	0.06	13	0.8	16					16	20						GHP-G16
OFFICE	135	1	5.0	0.06	13	0.8	16					16	20						GHP-G17
OFFICE	119	1	5.0	0.06	12	0.8	15	150	0.10										GHP-G18
CORRIDOR	123	0	0.0	0.06	7	0.8	9	50	0.18										GHP-G18
LIBRARY	116	1	5.0	0.06	12	0.8	15	140	0.11										GHP-G18
TOTAL (GHP-G18)	358				31					0.97	32	32	75						GHP-G18
TOOL	338	1	5.0	0.06	25	0.8	32					32	35						GHP-G19
SUPPLY	338	1	5.0	0.06	25	0.8	32					32	35						GHP-G20
CORRIDOR	123	0	0.0	0.06	7	0.8	9	50	0.18										GHP-G21
OFFICE	119	1	5.0	0.06	12	0.8	15	150	0.10										GHP-G21
TOTAL (GHP-G21)	242				19					0.97	20	20	35						GHP-G21
TRAINING BAY	3,377													1.5			5,066	5,250	EF-G1
WOMENS/SHOWER	149														1/2	50/75	200	200	EF-G4
MENS/SHOWER	149														1/2	50/75	200	200	EF-G5
TOILET	121														1	75	75	75	EF-G6

UNIT SUPPLY / GPTB
2021 IMC CHAPTER 11 COMPLIANCE CALCULATIONS

UNIT MARK NO.	REFRIGERANT ZONE	REFRIGERANT ZONE AREA (SF)	ROOM HEIGHT (FT.)	REFRIGERANT ZONE VOLUME (CF)	2021 IMC TABLE – AMOUNT OF REFRIGERANT PER OCCUPIED SPACE (LBS) (NOTE 5)	MAX UNIT CHARGE (LBS)	2021 IMC TABLE 1104.4 COMPLIANCE
GHP-G1	SUPPLY	1,151	18	20,718	99	2.0625	YES
GHP-G2	SUPPLY	1,151	18	20,718	99	2.0625	YES
GHP-G3	VAULT	600	9.33	5,598	27	1.4375	YES
GHP-G4	VAULT	600	9.33	5,598	27	1.4375	YES
GHP-G5	OFFICE	124	9	1,116	5	0.875	YES
GHP-G6	OFFICE	124	9	1,116	5	0.875	YES
GHP-G7	CORRIDOR ZONE	964	9	8,676	42	2.0625	YES
GHP-G8	OPEN OFFICE	1,035	9	9,315	45	2.625	YES
GHP-G9	OFFICE	121	9	1,089	5	0.875	YES
GHP-G10	OFFICE	121	9	1,089	5	0.875	YES
GHP-G11	OFFICE	121	9	1,089	5	0.875	YES
GHP-G12	OFFICE	121	9	1,089	5	0.875	YES
GHP-G13	OPEN OFFICE	1,036	9	9,324	45	2.625	YES
GHP-G14	OFFICE	121	9	1,089	5	0.875	YES
GHP-G15	OFFICE	121	9	1,089	5	0.875	YES
GHP-G16	OFFICE	121	9	1,089	5	0.875	YES
GHP-G17	OFFICE	121	9	1,089	5	0.875	YES
GHP-G18	CORRIDOR ZONE	503	9	4,527	22	1.4375	YES
GHP-G19	TOOL	315	9	2,835	14	0.875	YES
GHP-G20	SUPPLY	315	9	2,835	14	0.875	YES
GHP-G21	OFFICE ZONE	208	9	1,872	9	0.875	YES

1. OCCUPANCY CLASSIFICATION (2021 IMC 1103.2) = COMMERCIAL.
2. REFRIGERANT = R-32.
3. SYSTEM CLASSIFICATION (2021 IMC 1103.3) = HIGH PROBABILITY.
4. REFRIGERANT CLASSIFICATION A2 (2021 IMC TABLE 1103.1).
5. 2021 IMC TABLE 1103.1 – AMOUNT OF REFRIGERANT PER OCCUPIED SPACE = 4.8 LBS/1000 CF.

UNIT SUPPLY / GPTB
HVAC COMPLIANCE CALCULATIONS

WHORTON ENGINEERING, INC.
HVAC – PLUMBING – PROCESS CONTROL
RANDALL WHORTON, P.E.
PHONE: (256) 820-9897
25 SUMMERALL GATE ROAD
ANNISTON, ALABAMA 36205
WHORTON ENGINEERING PROJECT NO. 22164

ALABAMA REGISTERED PROFESSIONAL ENGINEER No.14192 RANDALL D. WHORTON
11-05-2024

SS&L ARCHITECTS
Montgomery | Dothan | Auburn | Huntsville | Pensacola
WWW.SSLARCH.COM | 256.285.1063

Rev.	Description	Date

Job Number: 21112
AL ARNG IFB #: AC-25-B-0006-S
Date: NOVEMBER 1, 2024
Drawn By: JH
Checked By: RDW

Project Title:
HUNTSVILLE READINESS CENTER
5180 MOORE'S MILL ROAD
HUNTSVILLE AL, 35811

Sheet Title:
UNIT SUPPLY/GPTB HVAC COMPLIANCE CALCULATIONS

Sheet Number:
GM2.8

EXHAUST FAN SEQUENCE OF OPERATION

EF-G1	WALL MOUNTED "HIGH/LOW/OFF" SWITCH/CONTROL SHALL BE MOUNTED AT 48" AFF. WHEN THE FAN IS SWITCHED "ON" L-G6 SHALL OPEN. VERIFY FINAL HEIGHT WITH ARCHITECT PRIOR TO INSTALLATION.
EF-G2	WALL MOUNTED THERMOSTAT SHALL BE MOUNTED AT 48" AFF. WHEN THE FAN IS SWITCHED "ON" L-G1 AND L-G2 SHALL OPEN. VERIFY FINAL HEIGHT WITH ARCHITECT PRIOR TO INSTALLATION.
EF-G3	WALL MOUNTED THERMOSTAT SHALL BE MOUNTED AT 48" AFF. WHEN THE FAN IS SWITCHED "ON" L-G3 AND L-G4 SHALL OPEN. VERIFY FINAL HEIGHT WITH ARCHITECT PRIOR TO INSTALLATION.

1. SWITCH AND ALL WIRING SHALL BE FURNISHED AND INSTALLED BY THE ELECTRICAL CONTRACTOR.
2. MAGNETIC MOTOR STARTERS AND OVERLOADS SHALL BE FURNISHED BY THE MECHANICAL CONTRACTOR AND INSTALLED BY THE ELECTRICAL CONTRACTOR.
3. THE INTAKE LOUVER DAMPER OPERATOR AND LIMIT SWITCH SHALL BE MOUNTED IN A BASE FRAME BELOW THE FAN/LOUVER WALL SLEEVE.

GENERAL NOTES:

1. ALL DIFFUSERS/GRILLE RUNOUTS SHALL INCLUDE SPIN-IN WITH DAMPER.
2. ALL OUTSIDE AIR RUNOUTS, EXHAUST, ETC. AND BRANCH DUCTS SHALL INCLUDE SPIN-IN WITH DAMPER
3. REFERENCE PLUMBING PLANS FOR CONDENSATE PIPING.
4. TEST AND BALANCE IS REQUIRED FOR ALL UNITS, DUCT, GRILLES, ETC. SHOWN ON PLANS. REFERENCE SPECIFICATIONS FOR ADDITIONAL INFORMATION.
5. ALL LOUVERS SHALL HAVE A PLENUM BOX. PLENUM BOX SHALL BE SIZED TO MATCH LOUVER DIMENSIONS. PLENUM BOX SHALL BE 18" DEEP.
6. MECHANICAL CONTRACTOR SHALL COORDINATE ROUTING OF REFRIGERANT LINES AND DUCTWORK WITH ALL OTHER TRADES.
7. COORDINATE FINAL LOCATION OF PORTABLE DEHUMIDIFIERS WITH ARCHITECT, PLUMBING, ELECTRICAL, AND GENERAL CONTRACTOR PRIOR TO INSTALLATION.

UNIT SUPPLY/GPTB DIFFUSER SCHEDULE

Tag	Size	Type	Neck Size	Model Number	Manufacturer	Notes
SG-88	8"X8"	SUPPLY/RETURN	---	SG-PR	TITUS	WITH ANGLE MOUNTING FRAME
RG-24	24"X24"	RETURN	22"X22"	8RF	TITUS	WITH 1" FILTER
SD-8	24"X24"	SUPPLY	8" DIA	TDC	TITUS	
ASD-8	24"X24"	SUPPLY	8" DIA	TDC-AA	TITUS	ALUMINUM
SD-10	24"X24"	SUPPLY	10" DIA	TDC	TITUS	
SASD-66	6"X6"	SUPPLY	6"X6"	TDC-AA	TITUS	ALUMINUM
SD-1212	24"X24"	SUPPLY	12"X12"	TDC	TITUS	
FURNISH AND INSTALL AN INSULATION BLANKET ON THE BACK OF ALL DIFFUSERS AND GRILLES						

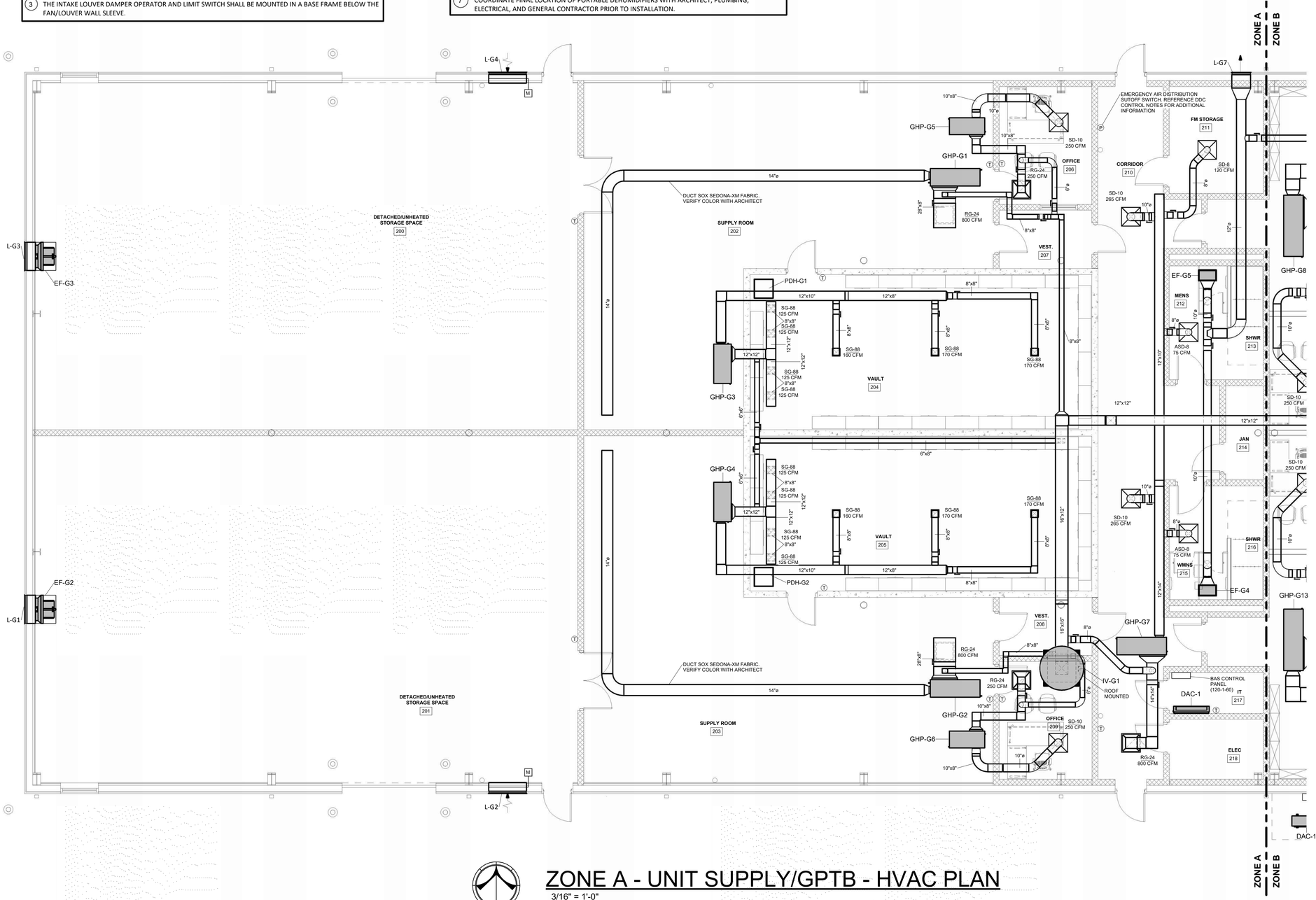

ZONE A - UNIT SUPPLY/GPTB - HVAC PLAN

3/16" = 1'-0"

WHORTON ENGINEERING, INC.

HVAC – PLUMBING – PROCESS CONTROL

RANDALL WHORTON, P.E.
PHONE: (256) 820-9897

25 SUMMERALL GATE ROAD
ANNISTON, ALABAMA 36205

WHORTON ENGINEERING PROJECT NO. 22164

S|S&L ARCHITECTS
Montgomery | Dothan | Auburn | Huntsville | Pensacola
WWW.SSLARCH.COM | 334.283.6603

Rev.	Description	Date

Job Number: 21112

AL ARNG IFB #: AC-25-B-0006-S

Date: NOVEMBER 1, 2024

Drawn By: RDW

Checked By: RDW

Project Title

HUNTSVILLE READINESS CENTER
5180 MOORE'S MILL ROAD
HUNTSVILLE AL, 35811

Sheet Title: ZONE A -UNIT SUPPLY/GPTB - HVAC PLAN

Sheet Number: GM3.1

STATE OF ALABAMA No.14192 PROFESSIONAL ENGINEER RANDALL D. WHORTON

11-11-2024

UNIT SUPPLY/GPTB DIFFUSER SCHEDULE

Tag	Size	Type	Neck Size	Model Number	Manufacturer	Notes
SG-88	8"X8"	SUPPLY/RETURN	---	SG-PR	TITUS	WITH ANGLE MOUNTING FRAME
RG-24	24"X24"	RETURN	22"X22"	8RF	TITUS	WITH 1" FILTER
SD-8	24"X24"	SUPPLY	8" DIA	TDC	TITUS	
ASD-8	24"X24"	SUPPLY	8" DIA	TDC-AA	TITUS	ALUMINUM
SD-10	24"X24"	SUPPLY	10" DIA	TDC	TITUS	
SASD-66	6"X6"	SUPPLY	6"X6"	TDC-AA	TITUS	ALUMINUM
SD-1212	24"X24"	SUPPLY	12"X12"	TDC	TITUS	
FURNISH AND INSTALL AN INSULATION BLANKET ON THE BACK OF ALL DIFFUSERS AND GRILLES						

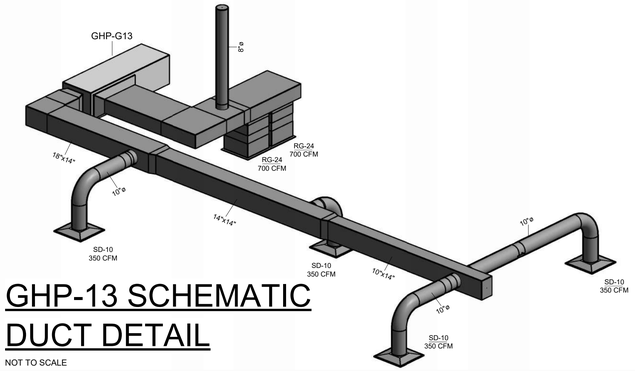

GHP-13 SCHEMATIC DUCT DETAIL

NOT TO SCALE

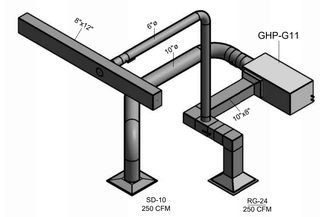

GHP-G11 SCHEMATIC DUCT DETAIL

NOT TO SCALE

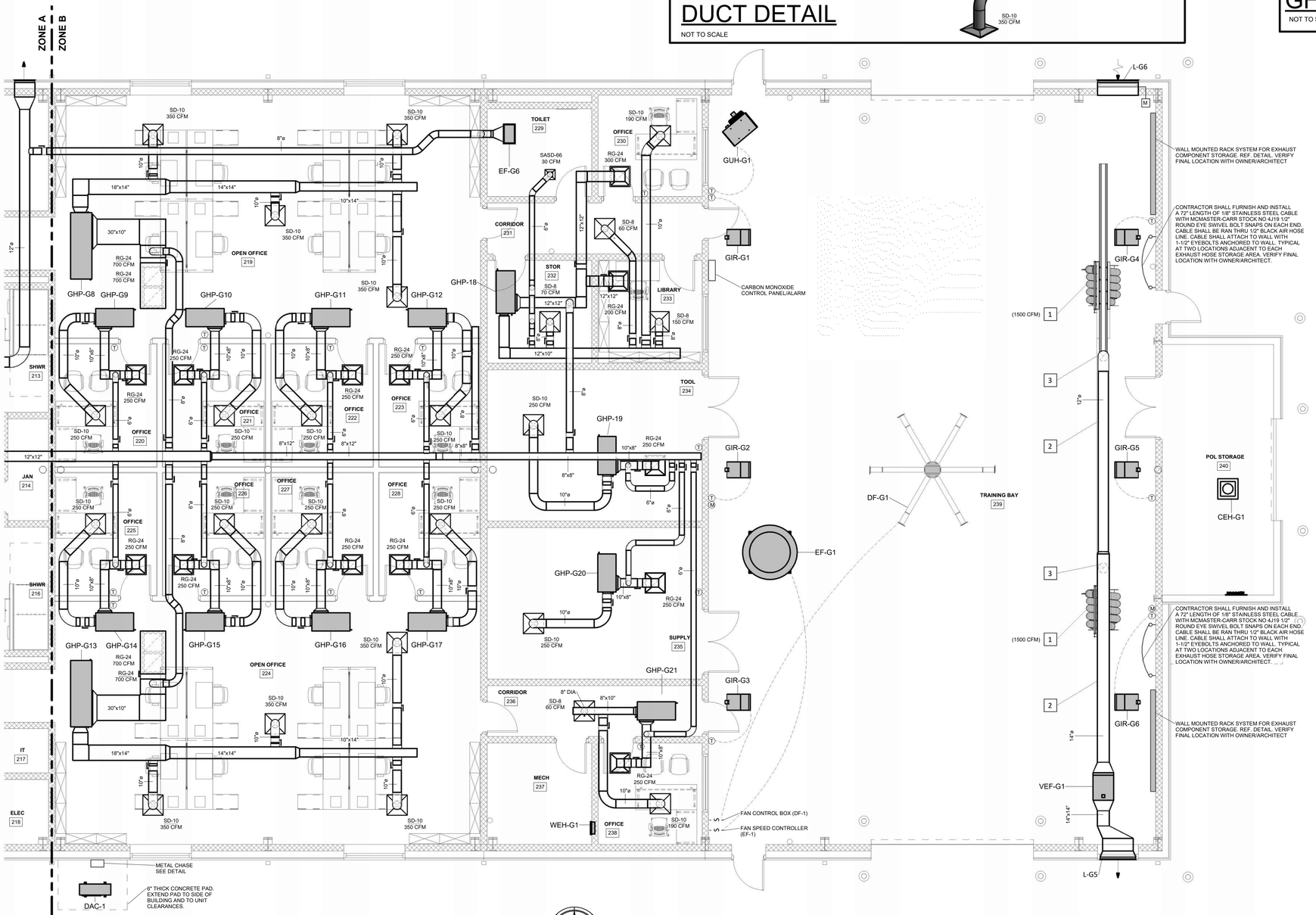

ZONE B - UNIT SUPPLY/GPTB - HVAC PLAN

3/16" = 1'-0"

VEHICLE EXHAUST NOTES

1. ARI-HETRA SPRING OPERATED HOSE REEL EXTRACTION SYSTEM. (1500 CFM EACH)
2. ARI-HETRA ARI-3000 ALUMINUM SLOTTED SUCTION DUCTING
3. 12" DIA. EXHAUST DUCT CONNECTION TO EXHAUST CHANNEL. CONNECT TO CHANNEL WITH FACTORY EXHAUST CONNECTORS.
4. CARBON MONOXIDE WALL MOUNT CONTROLLER WITH VISIBLE AND AUDIBLE ALARMS. CARBON MONOXIDE WALL MOUNTED CONTROLLER/MONITOR SHALL BE EQUAL TO ENMET CORPORATION CP-10 ALARM MONITOR WITH CARBON MONOXIDE ROOM SENSOR. CONTROLLER REQUIRES 120-1-60 POWER. ALARM SHALL BE INTERLOCKED TO VEHICLE EXHAUST FANS EF-G1 ROOM EXHAUST FAN TO ACTIVATE FANS IF FAN IS NOT ALREADY "ON".
5. CARBON MONOXIDE ROOM SENSOR EQUAL TO ENMET CORPORATION SDS-97D. 24 VDC LOOP POWER FROM CONTROLLER TO SENSOR SHALL BE INSTALLED BY THE MECHANICAL SUB-CONTRACTOR. SENSOR SHALL BE MOUNTED AT 48" AFF. VERIFY FINAL HEIGHT WITH ARCHITECT PRIOR TO INSTALLATION.

EXHAUST FAN SEQUENCE OF OPERATION

EF-G1	WALL MOUNTED "HIGH/LOW/OFF" SWITCH/CONTROL SHALL BE MOUNTED AT 48" AFF. WHEN THE FAN IS SWITCHED "ON" L-G6 SHALL OPEN. VERIFY FINAL HEIGHT WITH ARCHITECT PRIOR TO INSTALLATION.
EF-G2	WALL MOUNTED THERMOSTAT SHALL BE MOUNTED AT 48" AFF. WHEN THE FAN IS SWITCHED "ON" L-G1 AND L-G2 SHALL OPEN. VERIFY FINAL HEIGHT WITH ARCHITECT PRIOR TO INSTALLATION.
EF-G3	WALL MOUNTED THERMOSTAT SHALL BE MOUNTED AT 48" AFF. WHEN THE FAN IS SWITCHED "ON" L-G3 AND L-G4 SHALL OPEN. VERIFY FINAL HEIGHT WITH ARCHITECT PRIOR TO INSTALLATION.

1. SWITCH AND ALL WIRING SHALL BE FURNISHED AND INSTALLED BY THE ELECTRICAL CONTRACTOR.
2. MAGNETIC MOTOR STARTERS AND OVERLOADS SHALL BE FURNISHED BY THE MECHANICAL CONTRACTOR AND INSTALLED BY THE ELECTRICAL CONTRACTOR.
3. THE INTAKE LOUVER DAMPER OPERATOR AND LIMIT SWITCH SHALL BE MOUNTED IN A BASE FRAME BELOW THE FAN/LOUVER WALL SLEEVE.

GENERAL NOTES:

1. ALL DIFFUSERS/GRILLE RUNOUTS SHALL INCLUDE SPIN-IN WITH DAMPER.
2. ALL OUTSIDE AIR RUNOUTS, EXHAUST, ETC. AND BRANCH DUCTS SHALL INCLUDE SPIN-IN WITH DAMPER.
3. REFERENCE PLUMBING PLANS FOR CONDENSATE PIPING.
4. TEST AND BALANCE IS REQUIRED FOR ALL UNITS, DUCT, GRILLES, ETC. SHOWN ON PLANS. REFERENCE SPECIFICATIONS FOR ADDITIONAL INFORMATION.
5. ALL LOUVERS SHALL HAVE A PLENUM BOX. PLENUM BOX SHALL BE SIZED TO MATCH LOUVER DIMENSIONS. PLENUM BOX SHALL BE 18" DEEP.
6. MECHANICAL CONTRACTOR SHALL COORDINATE ROUTING OF REFRIGERANT LINES AND DUCTWORK WITH ALL OTHER TRADES.
7. COORDINATE FINAL LOCATION OF PORTABLE DEHUMIDIFIERS WITH ARCHITECT, PLUMBING, ELECTRICAL, AND GENERAL CONTRACTOR PRIOR TO INSTALLATION.

0' 2' 4' 8' 16'

WHORTON ENGINEERING, INC.

HVAC – PLUMBING – PROCESS CONTROL

RANDALL WHORTON, P.E.
PHONE: (256) 820-9897

25 SUMMERALL GATE ROAD
ANNISTON, ALABAMA 36205

WHORTON ENGINEERING PROJECT NO. 22164

S|S&L ARCHITECTS
Montgomery | Dothan | Auburn | Huntsville | Pensacola
WWW.SSLARCH.COM | 334.283.6603

Rev.	Description	Date

Job Number: 21112

AL ARNG IFB #: AC-25-B-0006-S

Date: NOVEMBER 1, 2024

Drawn By: RDW

Checked By: RDW

Project Title

HUNTSVILLE READINESS CENTER
5180 MOORE'S MILL ROAD
HUNTSVILLE AL, 35811

Sheet Title: ZONE B -UNIT SUPPLY/GPTB - HVAC PLAN

Sheet Number: GM3.2

ALABAMA LICENSED PROFESSIONAL ENGINEER No.14192 RANDALL D. WHORTON
11-11-2024

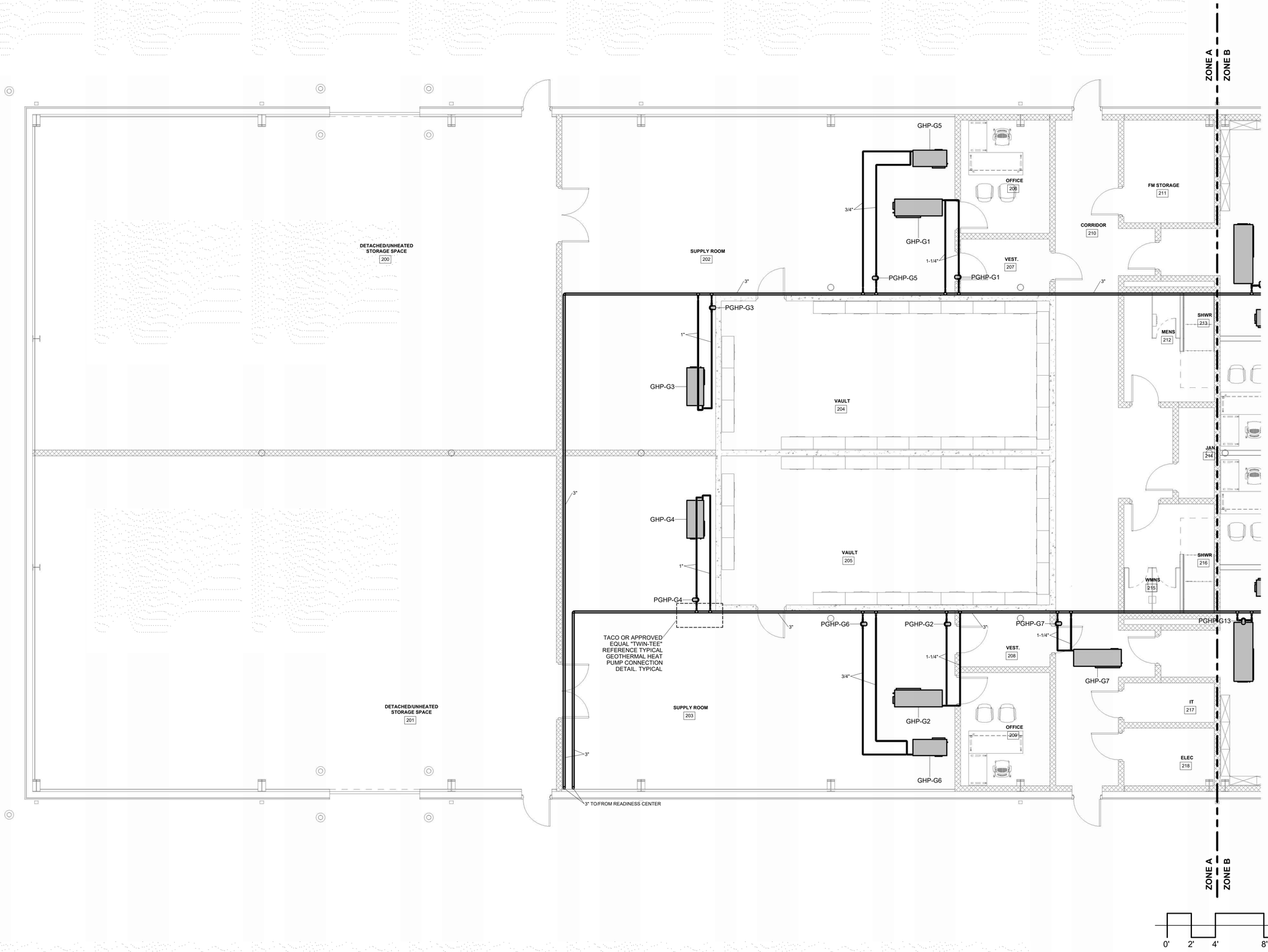

ZONE A - UNIT SUPPLY/GPTB - HVAC HYDRONIC PIPING PLAN

3/16" = 1'-0"

WHORTON ENGINEERING, INC.

HVAC – PLUMBING – PROCESS CONTROL

RANDALL WHORTON, P.E.
PHONE: (256) 820-9897

25 SUMMERALL GATE ROAD
ANNISTON, ALABAMA 36205

WHORTON ENGINEERING PROJECT NO. 22164

STATE OF ALABAMA
No.14192
PROFESSIONAL ENGINEER
RANDALL D. WHORTON

11-05-2024

S|S&L ARCHITECTS
Montgomery | Dothan | Auburn | Huntsville | Pensacola
WWW.SSLARCH.COM | 334.283.6603

Rev.	Description	Date
1	Revision 1	Date 1

Job Number: 21112

AL ARNG IFB #: AC-25-B-0006-S

Date: NOVEMBER 1, 2024

Drawn By: RDW

Checked By: RDW

Project Title

HUNTSVILLE READINESS CENTER
5180 MOORE'S MILL ROAD
HUNTSVILLE AL, 35811

Sheet Title
ZONE A -UNIT SUPPLY/GPTB - HVAC HYDRONIC PIPING PLAN

Sheet Number
GM4.1

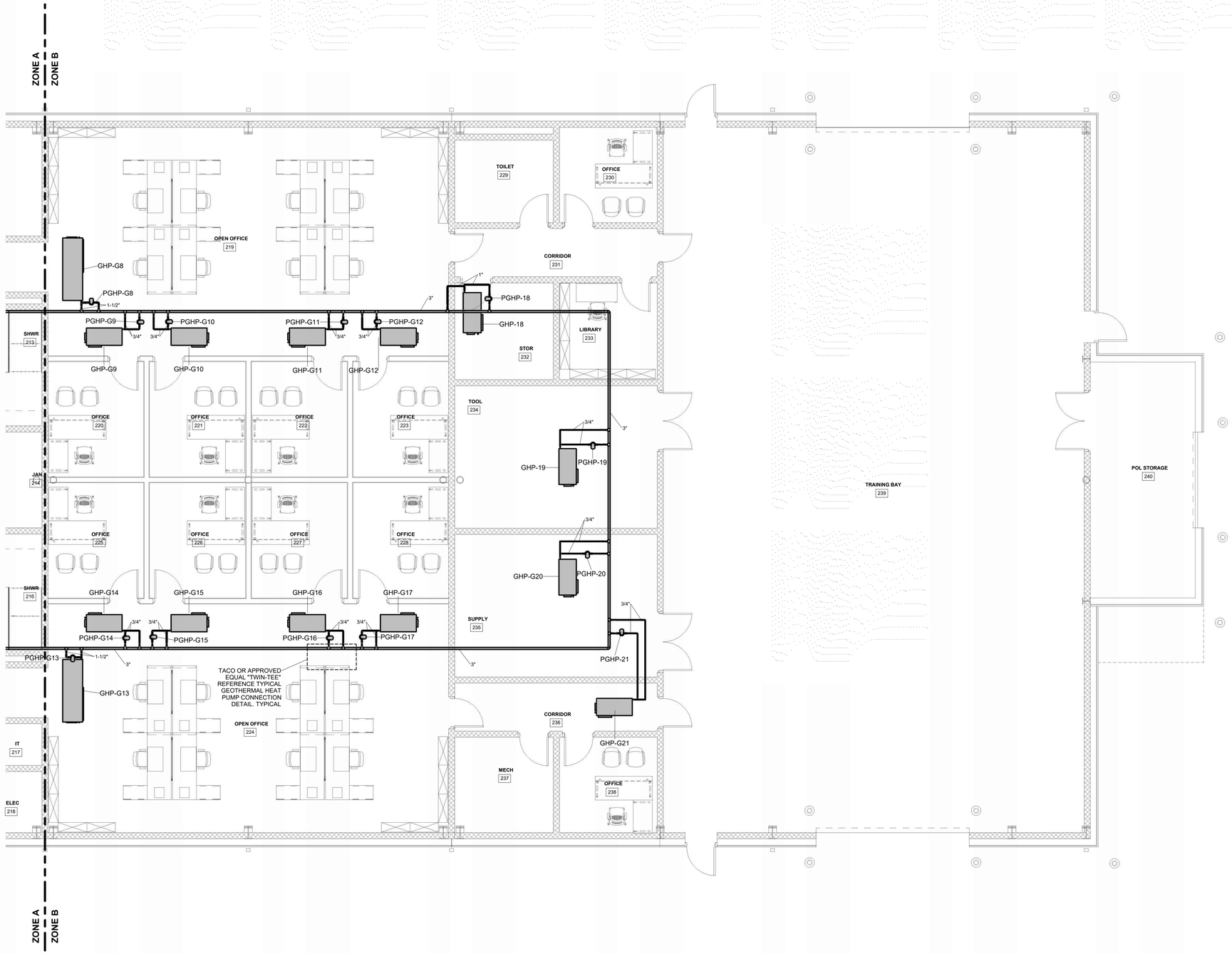

0' 2' 4' 8' 16'

ZONE B - UNIT SUPPLY/GPTB - HVAC HYDRONIC PIPING PLAN

3/16" = 1'-0"

WHORTON ENGINEERING, INC.

HVAC – PLUMBING – PROCESS CONTROL

RANDALL WHORTON, P.E.
PHONE: (256) 820-9897

25 SUMMERALL GATE ROAD
ANNISTON, ALABAMA 36205

WHORTON ENGINEERING PROJECT NO. 22164

ALABAMA No.14192 PROFESSIONAL ENGINEER RANDALL D. WHORTON

11-05-2024

S|S&L ARCHITECTS
Montgomery | Dothan | Auburn | Huntsville | Pensacola
WWW.SSLARCH.COM | 334.283.6603

Rev.	Description	Date

Job Number
21112

AL ARNG IFB #
AC-25-B-0006-S

Date
NOVEMBER 1, 2024

Drawn By
RDW

Checked By
RDW

Project Title

HUNTSVILLE READINESS CENTER
5180 MOORE'S MILL ROAD
HUNTSVILLE AL, 35811

Sheet Title
ZONE B -UNIT SUPPLY/GPTB - HVAC HYDRONIC PIPING PLAN

Sheet Number
GM4.2

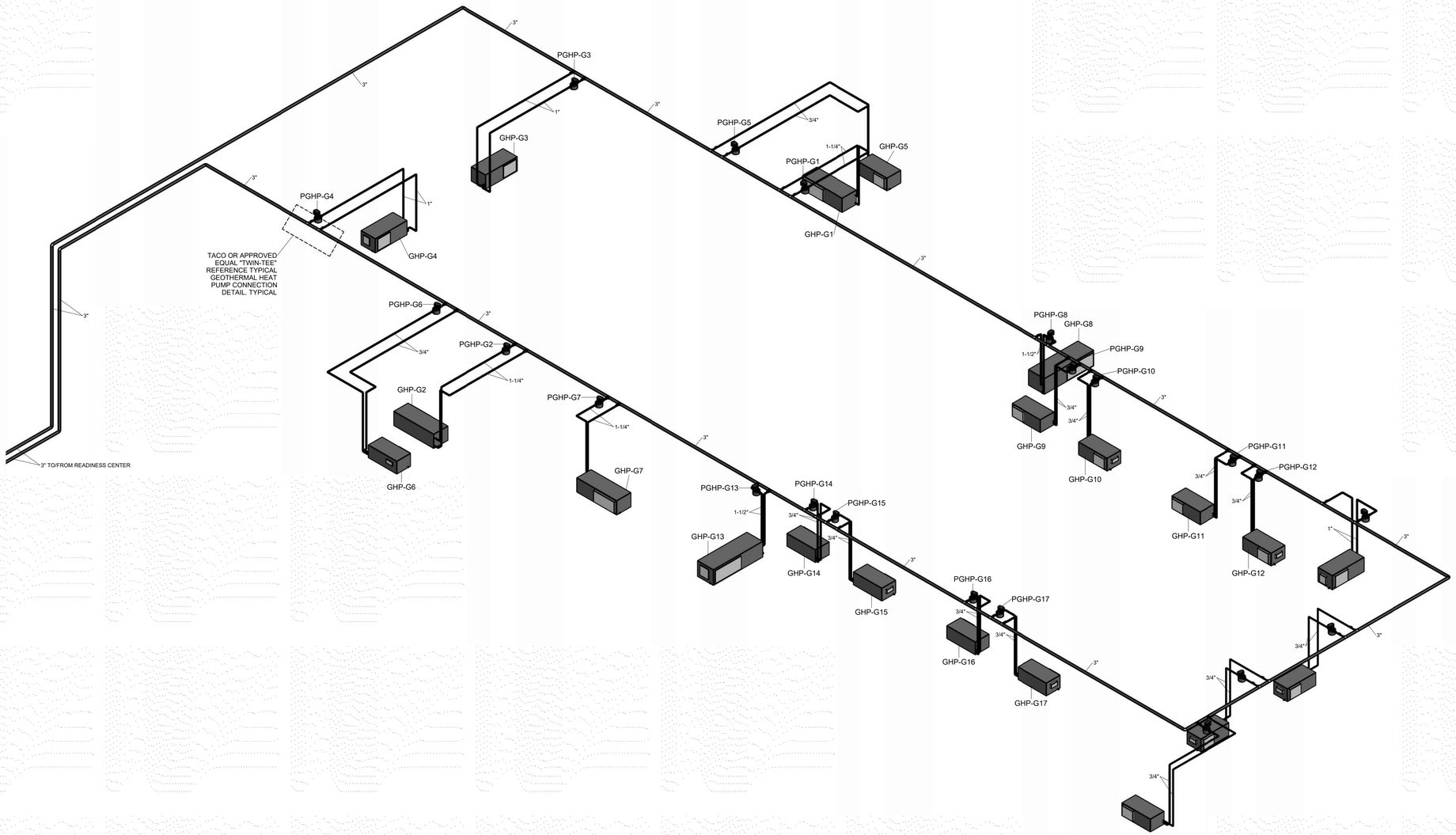

UNIT SUPPLY/GPTB - HVAC HYDRONIC PIPING RISER DIAGRAM

WHORTON ENGINEERING, INC.

HVAC – PLUMBING – PROCESS CONTROL

RANDALL WHORTON, P.E.
PHONE: (256) 820-9897

25 SUMMERALL GATE ROAD
ANNISTON, ALABAMA 36205

WHORTON ENGINEERING PROJECT NO. 22164

ALABAMA LICENSED PROFESSIONAL ENGINEER No.14192 RANDALL D. WHORTON

11-05-2024

S|S&L ARCHITECTS
Montgomery | Dothan | Auburn | Huntsville | Pensacola
WWW.SSLARCH.COM | 334.283.6603

Rev.	Description	Date

Job Number
21112

AL ARNG IFB #
AC-25-B-0006-S

Date
NOVEMBER 1, 2024

Drawn By
RDW

Checked By
RDW

Project Title

HUNTSVILLE READINESS CENTER
5180 MOORE'S MILL ROAD
HUNTSVILLE AL, 35811

Sheet Title
UNIT SUPPLY/GPTB - HVAC HYDRONIC PIPING RISER DIAGRAM

Sheet Number
GM4.3