ELECTRICAL LEGEND

CEILING OUTLETS

- A (2) — RECESSED 2' X 4' LED FIXTURE MARK "A" CIRCUIT No. 2 TYPICAL
- A (2) — RECESSED 2' X 4' LED FIXTURE MARK "A" CIRCUIT No. 2 TYPICAL "EMERGENCY POWER"
- A 2 — RECESSED 1' X 4' LED FIXTURE MARK "A" CIRCUIT No. 2 TYPICAL
- A 2 — RECESSED 1' X 4' LED FIXTURE MARK "A" CIRCUIT No. 2 TYPICAL "EMERGENCY POWER"
- A (2) — RECESSED 2' X 2' LED FIXTURE MARK "A" CIRCUIT No. 2 TYPICAL
- A (2) — RECESSED 2' X 2' LED FIXTURE MARK "A" CIRCUIT No. 2 TYPICAL "EMERGENCY POWER"
- FS 2 — SURFACE OR PENDANT MOUNTED LED STRIP FIXTURE MARK "FS" CIRCUIT No. 2 TYPICAL
- FS 2 — SURFACE OR PENDANT MOUNTED LEDT STRIP FIXTURE MARK "FS" CIRCUIT No. 2 TYPICAL "EMERGENCY POWER"
- RECESSED OR SURFACE MOUNT LED DOWNLIGHT
- RECESSED OR SURFACE MOUNT LED DOWNLIGHT "EMERGENCY POWER"
- (J) — JUNCTION BOX
- EXIT LIGHT
- EF — EXHAUST FAN
- DUPLEX RECEPTACLE – 20 AMP, 125 VOLT, 2 POLE, 3 WIRE GROUNDED TYPE, NEMA 5-20R. CEILING MOUNTED.
- OS 1 — CEILING MOUNTED OR SUSPENDED MULTI-TECHNOLOGY OCCUPANCY SENSOR, SIMILAR TO LEVITON OSC20-UOW
- OS 2 — CEILING MOUNTED OR SUSPENDED MULTI-TECHNOLOGY OCCUPANCY SENSOR, SIMILAR TO LEVITON OSC10-MOW
- OS 3 — CEILING MOUNTED OR SUSPENDED INFRARED OCCUPANCY SENSOR, SIMILAR TO LEVITON
- PP — POWER PACK FOR OCCUPANCY SENSOR
- L1 — AUXILIARY RELAY FOR OCCUPANCY SENSOR
- PP L1 — DOUBLE POLE SINGLE THROW RELAY 120 VAC COIL 2-20A CONTINUOUS CONTACTS, SIMILAR TO LEVITON OSP20-RDO

WALL OUTLETS

- FS 2 — WALL MOUNTED FLUORESCENT FIXTURE MARK "FS" CIRCUIT No. 2 TYPICAL
- FS 2 — WALL MOUNTED FLUORESCENT FIXTURE MARK "FS" CIRCUIT No. 2 TYPICAL "EMERGENCY POWER"
- WALL MOUNTED EXIT LIGHT
- WALL MOUNTED LIGHTING FIXTURE
- WALL MOUNTED LIGHTING FIXTURE "EMERGENCY POWER"
- BATTERY OPERATED EMERGENCY LIGHTING FIXTURE
- DUPLEX RECEPTACLE – 20 AMP, 125 VOLT, 2 POLE, 3 WIRE GROUNDED TYPE, NEMA 5-20R. MOUNT 18" A.F.F. UNLESS NOTED OTHERWISE
- G — DUPLEX RECEPTACLE – 20 AMP, 125 VOLT, GFI, 2 POLE, 3 WIRE GROUNDED TYPE, NEMA 5-20R. MOUNT 18" A.F.F. UNLESS NOTED OTHERWISE
- W — DUPLEX RECEPTACLE – 20 AMP, 125 VOLT, GFI, 2 POLE, 3 WIRE GROUNDED TYPE, NEMA 5-20R. MOUNT 18" A.F.F. UNLESS NOTED OTHERWISE; PROVIDE WEATHERPROOF BOX FOR RECEPTACLE
- DUPLEX RECEPTACLE – 20 AMP, 125 VOLT, 2 POLE, 3 WIRE GROUNDED TYPE, NEMA 5-20R. MOUNT 6" ABOVE COUNTER
- G — DUPLEX RECEPTACLE – 20 AMP, 125 VOLT, GFI, 2 POLE, 3 WIRE GROUNDED TYPE, NEMA 5-20R. MOUNT 6" ABOVE COUNTER
- DUPLEX RECEPTACLE – 20 AMP, 125 VOLT, 2 POLE, 3 WIRE GROUNDED TYPE, NEMA 5-20R. MOUNT 90" A.F.F. ADJACENT TO TELEVISION OUTLET; COORDINATE LOCATION WITH TELEVISION OUTLET PRIOR TO ROUGH-IN
- G — QUADRAPLEX RECEPTACLE – 20 AMP, 125 VOLT, GFI, 2 POLE, 3 WIRE GROUNDED TYPE, NEMA 5-20R. MOUNT 18" A.F.F. UNLESS NOTED OTHERWISE
- QUADRAPLEX RECEPTACLE – 20 AMP, 125 VOLT, 2 POLE, 3 WIRE GROUNDED TYPE, NEMA 5-20R. MOUNT 18" A.F.F. UNLESS NOTED OTHERWISE
- QUADRAPLEX RECEPTACLE – 20 AMP, 125 VOLT, 2 POLE, 3 WIRE GROUNDED TYPE, NEMA 5-20R. MOUNT 6" ABOVE COUNTER UNLESS NOTED OTHERWISE
- DUPLEX RECEPTACLE – 20 AMP, 125 VOLT, GFI, 3 POLE, 3 WIRE GROUNDED TYPE, NEMA 5-20R. MOUNT 26" AFF TO C/L FOR DRINKING FOUNTAIN
- 250V RECEPTACLE; MT 26" AFF TO C/L; NEMA 6-50R;
- 2 (J) — JUNCTION BOX SIZE NOTED OR REQUIRED, WITH BLANK SCREW COVER AND FLEXIBLE CONDUIT CONNECTION
- (P) — PHOTOCELL; TORK MODEL 5231 (120V), TWIST RECEPTACLE: TORK 2421.
- SINGLE RECEPTACLE – 30 AMP, 250 VOLT, 2 POLE, 3 WIRE GROUNDED TYPE, NEMA L6-30R.
- SINGLE RECEPTACLE – 30 AMP, 125 VOLT, 2 POLE, 3 WIRE GROUNDED TYPE, NEMA L5-30R. MOUNT AS DIRECTED FOR RACK UPS SYSTEM
- EP — EXPLOSION PROOF DUPLEX RECEPTACLE – 20 AMP, 125 VOLT, GFI, 2 POLE, 3 WIRE GROUNDED MOUNT 24" A.F.F. UNLESS NOTED OTHERWISE

TELEPHONE & TELEVISION SYSTEMS

- WALL OUTLET – 4-1/2" SQ X 3-1/2" DEEP BOX; MOUNT 18" AFF; FOR TYPICAL UNITS-SEE SHEET E4.3 USE SHALLOW BOXES WHERE WALLS ARE FURRED OUT
- C — WALL OUTLET – 4-1/2" SQ X 3-1/2" DEEP BOX; MOUNT ABOVE COUNTER; FOR TYPICAL UNITS-SEE SHEET E4.3 USE SHALLOW BOXES WHERE WALLS ARE FURRED OUT
- TV — WALL OUTLET – 4-1/2" SQ X 3-1/2" DEEP BOX; MOUNT ON WALL AT HEIGHT AS DIRECTED BY ARCHITECT FOR TELEVISION. SEE TYPICAL UNITS-SEE SHEET E4.3
- TBB — TELEPHONE BACKBOARD – 3/4" EXTERIOR GRADE PLYWOOD WITH TWO COATS OF INSULATING VARNISH, SIZE AS SHOWN
- TV — TELEVISION CABLE WALL OUTLET WITH COAXIAL SCREW JACK AND COVERPLATE; MT 18" AFF TO C/L
- COMMUNICATIONS RACK, SEE SHEET E4.1 FOR REQUIREMENTS
- CON — DATA CONNECTION FOR MECHANICAL CONTROL PANEL COORDINATE WITH MECHANICAL FOR EXACT LOCATION. 4-1/2" SQ X 3 1/2" DEEP BOX, WITH 3/4"C. STUBBED TO ABOVE CEILING. PROVIDE PROTECTIVE BUSHING. PROVIDE ONE CAT 6 BACK TO COMM RACK
- (W) — WIRELESS ACCESS POINT. PROVIDE TWO (2) CAT 6 CABLES TO THIS LOCATION AND TERMINATE. PROVIDE 15 FEET OF SLACK AT THIS LOCATION FOR FINAL LOCATION BY ARNG.
- CCTV — CLOSED CIRCUIT TELEVISION CAMERA
- CCTV — CLOSED CIRCUIT TELEVISION LED TV

PANELS AND POWER

- PANELBOARD
- PANELBOARD FLUSH MOUNTED
- CON — CONTROL PANEL
- NON-FUSIBLE DISCONNECT SWITCH; XX/YY/ZZ WHERE X INDICATES AMPERAGE, Y INDICATES # OF POLES, AND Z INDICATES NEMA RATING
- FUSIBLE DISCONNECT SWITCH; XX/YY/ZZ WHERE X INDICATES AMPERAGE, Y INDICATES # OF POLES, AND Z INDICATES NEMA RATING; FURNISH AND INSTALL FUSES PER MANUFACTURER'S RECOMMENDATIONS
- (5) — MOTOR FURNISHED BY OTHERS AND CONNECTED BY ELECTRICAL CONTRACTOR; '5' INDICATES HORSE POWER RATING
- CIRCUIT BREAKER
- TRANSFER SWITCH
- T — TRANSFORMER
- B — ENCLOSED CIRCUIT BREAKER
- ELECTRIC METER
- GROUNDING ELECTRODE CONNECTION

MISCELLANEOUS EQUIPMENT

- C — CONTACTOR
- EXTERIOR POLE LIGHT
- (WH) — WATER HEATER
- GEN — GENERATOR ANNUNCIATOR PANEL
- ATS — AUTOMATIC TRANSFER SWITCH
- MTS — MANUAL TRANSFER SWITCH
- (S) — CEILING MOUNTED SPEAKER, BACKBOX AND T-BARS
- OWNER FURNISHED, CONTRACTOR INSTALLED TELEPOWER POLE WITH POWER AND COMMUNICATIONS FURNITURE FEED.

BRANCH CIRCUITING

- RUN CONCEALED UNDER FLOOR OR IN GROUND
- RUN CONCEALED IN CEILING OR WALLS
- LA-1 — HOMERUN TO PANEL. ANY CIRCUIT WITHOUT FURTHER IDENTIFICATION INDICATES 2 #12, 1 #12 GROUND – 3/4" C; 3 #12, 1 #12 GROUND – 3/4" C; 4 #12, 1 #12 GROUND – 3/4" C; ETC. AS PER NEC. LETTERS AND NUMERALS INDICATE PANEL AND CIRCUIT NUMBER.
- 10 / LA-1 — HOMERUN TO PANEL. ANY CIRCUIT WITHOUT FURTHER IDENTIFICATION INDICATES 2 #10, 1 #10 GROUND – 3/4" C; 10 3 #10, 1 #10 GROUND – 3/4" C; 10 4 #10, 1 #10 GROUND – 1" C; ETC. AS PER NEC. LETTERS AND NUMERALS INDICATE PANEL AND CIRCUIT NUMBER.
- 8 / LA-1 — HOMERUN TO PANEL. ANY CIRCUIT WITHOUT FURTHER IDENTIFICATION INDICATES 2 #8, 1 #10 GROUND – 1" C; 8 3 #8, 1 #10 GROUND – 1" C; 8 4 #8, 1 #10 GROUND – 1 1/4" C; ETC. AS PER NEC. LETTERS AND NUMERALS INDICATE PANEL AND CIRCUIT NUMBER.
- 6 — WHERE A NUMBER IS SHOWN NEXT TO OR ON THE CIRCUIT OR HOMERUN, THE NUMBER INDICATES CONDUCTOR SIZE OTHER THAN #12 – NUMBER #6 CONDUCTORS INDICATED. PROVIDE GROUND SIZED PER NEC TABLE 250 FOR MAX AMPACITY OF CONDUCTOR SIZE AS SHOWN. SIZE CONDUIT PER NEC ANNEX C.
- LIQUID-TIGHT FLEXIBLE CONDUIT CONNECTION
- E — SURFACE MOUNTED CONDUIT; RUN PARALLEL OR PERPENDICULAR TO BUILDING LINES
- EMPTY CONDUIT WITH PULLWIRE, RUN CONCEALED IN CEILING OR WALLS

WALL SWITCHES (UNLESS OTHERWISE NOTED, MOUNT 48" A.F.F.)

- S — A.C. TYPE, SINGLE POLE, 20 AMP, 120/277 VOLT
- S_3 — A.C. TYPE, 3-WAY, 20 AMP, 120/277 VOLT
- S_M — MOTOR RATED TOGGLE SWITCH DISCONNECT, WITH THERMAL OVERLOADS A.C. TYPE, 20 AMP, 120/277 VOLT
- 30/1 S_M — MOTOR RATED TOGGLE SWITCH DISCONNECT, WITH THERMAL OVERLOADS A.C. TYPE, 30 AMP, 120/277 VOLT
- S_{01} — OCCUPANCY SENSOR WALL SWITCH, MULTI-TECHNOLOGY, SELF POWERED, SIMILAR TO LEVITON OSSTMT-MD
- S_{02} — OCCUPANCY SENSOR WALL SWITCH, PASSIVE INFRARED, SELF POWERED, SIMILAR TO LEVITON ODS10-ID
- S_T — PRESET INTERVAL TIMER SWITCH, SENSOR SWITCH PTS 720 SERIES OR APPROVED EQUALS
- S_{T3} — DIGITAL AUTO-OFF IN WALL 3 WAY TIMER SWITCH 120/277 VAC, 12-28 VDC INTERMATIC # E1400WC
- D — 0-10V DIMMER SWITCH COMPATIABLE WITH LED DRIVERS FOR ROOM WHERE LOCATED
- PUSH BUTTON, TOGGLE SWITCH, ROTARY SWITCH, ETC., FURNISHED WITH EQUIPMENT BY OTHERS, INSTALLED AND WIRED BY THE ELECTRICAL CONTRACTOR.

FIRE ALARM /MASS NOTIFICATION SYSTEM

- FACP — FIRE/MNS ALARM SYSTEM CONTROL PANEL
- DMB — FIRE ALARM/MNS SYSTEM DIGITAL MESSAGE BOARD
- LOC — FIRE ALARM/MNS SYSTEM LOCAL OPERATING CONSOLE
- F — FIRE ALARM SYSTEM MANUAL PULL STATION
- FA — FIRE ALARM/MASS NOTIFICATION SYSTEM VOICE EVAC SPEAKER/WHITE STROBE LABELED "ALERT"
- FIRE ALARM SYSTEM/MNS CLEAR STROBE FIRE/AMBER STROBE MNS,
- TS — FIRE ALARM SYSTEM TAMPER SWITCH
- FS — FIRE ALARM SYSTEM FLOW SWITCH
- HD — FIRE ALARM SYSTEM AUTOMATIC HEAT DETECTOR; 135 DEGREE/RATE OF RISE TYPE; CEILING MOUNTED
- SD — FIRE ALARM SYSTEM AUTOMATIC SMOKE DETECTOR; CEILING MOUNTED
- PS — FIRE ALARM SYSTEM PRESSURE SWITCH FOR DRY PIPE SYSTEM
- SD EP — FIRE ALARM SYSTEM AUTOMATIC SMOKE DETECTOR; CEILING MOUNTED – EXPLOSION PROOF
- DD — FIRE ALARM SYSTEM AUTOMATIC AIR DUCT SMOKE DETECTOR MOUNTED IN MECHANICAL DUCT
- RT — FIRE ALARM SYSTEM REMOTE TEST STATION
- ZC — FIRE ALARM SYSTEM ZONE MODULE, CONTROL TYPE
- ZM — FIRE ALARM SYSTEM ZONE MODULE, MONITOR TYPE
- FIRE ALARM SYSTEM MAGNETIC DOOR HOLDERS
- —F— FIRE ALARM SYSTEM SUPERVISED CIRCUITING IN CONDUIT, RACEWAY INSTALLED CONCEALED

MISCELLANEOUS

A	AMPERE
ADA	AMERICANS WITH DISABILITIES ACT
AFF	ABOVE FINISH FLOOR
AIC	AMPERE INTERRUPTING CAPACITY
ATS	AUTOMATIC TRANSFER SWITCH
C	CONDUIT
CL	CENTER LINE
CWP	COLD WATER PIPE
EM	EMERGENCY
EMT	ELECTRIC METALLIC TUBING
GFI	GROUND FAULT INTERRUPTER
GRC	GALVANIZED RIGID METAL CONDUIT
GRD	GROUND
MCB	MAIN CIRCUIT BREAKER
MCC	MOTOR CONTROL CENTER
MLO	MAIN LUGS ONLY
MT	MOUNT
N	NEUTRAL
NIC	NOT IN CONTRACT
NEC	NATIONAL ELECTRICAL CODE
NEMA	NATIONAL ELECTRICAL MANUFACTURER'S ASSOC.
NFPA	NATIONAL FIRE PROTECTION ASSOCIATION
NL	NIGHT LIGHT
NTS	NOT TO SCALE
P	POLE
PF	POWER FACTOR
PH	PHASE
PNL	PANEL
PVC	PVC (POLYVINYL CHLORIDE) CONDUIT
SLD	SINGLE LINE DIAGRAM
TBB	TELEPHONE BACKBOARD
TVSS	TRANSIENT VOLTAGE SURGE SUPPRESSORS
UL	UNDERWRITER'S LABORATORY
U.N.O.	UNLESS NOTED OTHERWISE
V	VOLTAGE
W	WIRE
WP	WEATHERPROOF
#	NUMBER
3R	NEMA 3R WEATHERPROOF ENCLOSURE
4X	NEMA 4X WEATHERPROOF/CORROSION ENCLOSURE

FLOOR OUTLETS

- RECESSED FLOOR BOX – QUADRAPLEX RECEPTACLE – 20 AMP, 125 VOLT, GFI, 2 POLE, 3 WIRE, GROUNDED TYPE, NEMA 5-20R WITH 4-RJ45 CAT 6 JACKS, ARCHITECT TO SELECT COLORS, SIMILAR TO WALKER RC4 OR PRIOR APPROVED EQUALS

ALL ELECTRICAL DEVICE MOUNTING NOTES:

ALL ELECTRICAL DEVICES (RECEPTACLES, COMMUNICATIONS OUTLETS, SWITCHES, FIRE ALARM DEVICES, ETC.) THAT ARE SHOWN MOUNTED ON EXISTING BLOCK WALLS SHALL BE RECESSED AND CONCEALED. ALL RACEWAYS SHALL BE RECESSED IN BLOCK WALLS WHENEVER POSSIBLE. MC CABLE WILL BE ALLOWED TO FISH DOWN EXISTING BLOCK WALLS. THE MC CABLE SHOULD THEN TRANSITION TO EMT CONDUIT ONCE UP ABOVE BLOCK. MC CABLE WILL NOT BE ALLOWED ANYWHERE ELSE. WHEN RACEWAYS IN EXISTING BLOCK WALLS CANNOT BE CONCEALED THEN THE CONTRACTOR SHALL SURFACE MOUNT RACEWAYS USING EXPOSED EMT CONDUIT AND BOXES. WHEN DEVICES ARE SURFACE MOUNTED PROVIDE SURFACE MOUNTED EST OR FS BOXES FOR DEVICES. SIZE OF BOXES AS NEEDED FOR DEVICES. PROVIDE CONDUIT VERTICALLY DOWN WALLS. 1/2" CONDUIT WILL BE ALLOWED FOR EXPOSED VERTICAL RUNS DOWN WALLS FOR POWER AND LIGHTING CIRCUITS, 3/4" SHALL BE USED FOR COMMUNICATIONS. HORIZONTAL RUNS WILL NOT BE ALLOWED. SURFACE MOUNTING DEVICES ON REGULAR JUNCTION BOXES WILL NOT BE ALLOWED. REUSE EXISTING CONCEALED RACEWAYS WHENEVER POSSIBLE. PROVIDE BACK BOXES ON FIRE ALARM DEVICES. ALL FACEPLATES SHALL MOUNT NEATLY TO BOX AND THERE SHALL NOT BE ANY OVERLAP OF FACEPLATE PAST SURFACE BOX.

Gunn & Associates, P.C.
Consulting Engineers
3102 Highway 14, Millbrook, AL 36054, Tel: 334.285.1273
1200 Providence Park, Suite 200, Birmingham, AL 35242
GA#22-071

S|S&L ARCHITECTS
Montgomery | Dothan | Auburn | Huntsville | Pensacola
WWW.SSLARCH.COM | 256.285.1063

Rev.	Description	Date

Job Number: 21112
Date: NOVEMBER 1, 2024
Drawn By: KRG, JBG
Checked By: JBG
Project Title

HUNTSVILLE READINESS CENTER
5180 MOORE'S MILL ROAD
HUNTSVILLE AL, 35811

Sheet Title: ELECTRICAL LEGEND & NOTES
Sheet Number: E0.1

ALABAMA REGISTERED — NO. 20431 PROFESSIONAL — 11-01-24 — JOHN BARRY GRAILEY — ENGINEER

GENERAL ELECTRICAL NOTES:

1. THE SERVICE VOLTAGE TO THE FACILITY IS 120/208 VOLT, 3 PHASE, 4 WIRE.
2. INSTALLATION SHALL COMPLY WITH THE NATIONAL ELECTRICAL CODE, STATE AND LOCAL CODES, AND MANUFACTURER'S RECOMMENDATIONS.
3. MAINTAIN ALL CLEARANCES FOR ELECTRICAL EQUIPMENT PER THE NEC.
4. COORDINATE ROUGH-IN OF ALL ELECTRICAL DEVICES WITH ARCHITECTURAL FLOOR PLANS, ELEVATIONS AND MILLWORK SHOP DRAWINGS PRIOR TO ROUGH-IN. AVOID ALL BACKSPLASHES AT COUNTERS.
5. ALL DIMENSIONS INDICATED IN THESE DOCUMENTS ARE FOR REFERENCE AND COORDINATION PURPOSES ONLY. THE CONTRACTOR IS RESPONSIBLE FOR VERIFYING ALL DIMENSIONS IN THE FIELD, AND COORDINATING WORK WITH OTHER TRADES TO AVOID CONFLICTS.
6. VERIFY ALL DOOR SWINGS WITH ARCHITECTURAL BEFORE ROUGH-IN OF LIGHT SWITCHES TO ENSURE PROPER SWITCH LOCATION.
7. THE LOCATION OF OUTLETS, FIXTURES, AND EQUIPMENT SHOWN ON THE DRAWINGS ARE APPROXIMATE, OFFSET AS NEEDED OR AS REQUESTED BY THE OWNER. THE OWNER SHALL HAVE THE RIGHT TO RELOCATE ANY OUTLETS OR FIXTURES BEFORE THEY ARE INSTALLED WITHOUT ANY ADDITIONAL COST.
8. COORDINATE EXACT LOCATION OF ALL ELECTRICAL FLOOR DEVICES WITH ARCHITECT PRIOR TO INSTALLATION.
9. ALL CONDUIT SIZE SHALL BE A MINIMUM 3/4" UNLESS NOTED OTHERWISE IN THE DRAWINGS OR SPECIFICATIONS.
10. ALL ELECTRICAL RACEWAYS AND CABLING SHALL BE INSTALLED CONCEALED WITHIN THE CONFINES OF THE BUILDING FOUNDATIONS EXCEPT THOSE SPECIFICALLY SERVING LOADS OR EQUIPMENT EXTERIOR OF THE BUILDING. ALL SUCH RACEWAYS SHALL BE A MINIMUM 18" INSIDE FOUNDATIONS AND POWER AND COMMUNICATIONS RACEWAYS SHALL BE SEPARATED BY A MINIMUM 18".
11. ALL CONDUITS INSTALLED UNDERFLOOR SHALL BE ROUTED UNDER STRUCTURAL CONCRETE FLOOR SLABS. CONTRACTOR SHALL NOT INSTALL CONDUITS IN CONCRETE FLOORING WITHOUT THE EXPRESS WRITTEN PERMISSION OF THE STRUCTURAL ENGINEER. CONDUITS PENETRATING THRU CONCRETE FLOORS SHALL ADHERE TO THE ELECTRICAL SPECIFICATIONS AND RECOMMENDATIONS OF THE STRUCTURAL ENGINEER.
12. ALL RACEWAYS INSTALLED ON EXTERIOR OF THE BUILDING, INCLUDING CONDUIT UNDER CANOPIES, SHALL BE GRC. EMT WILL NOT BE ACCEPTED.
13. ALL RACEWAYS SHALL BE SUPPORTED PER NEC AND AT LEAST EVERY 10' AND WITHIN 3' OF EVERY JUNCTION BOX. RACEWAYS SUPPORTED ON BOTTOM OF SECONDARY CEILING SHALL BE SUPPORTED FROM THE STRUCTURE NOT FROM THE GYPBOARD CEILING.
14. ALL EMPTY WALL MOUNTED JUNCTION BOXES SHALL BE PROVIDED WITH A WALL BLANK AND ALL EMPTY RACEWAYS SHALL BE PROVIDED WITH A PULL WIRES.
15. PROVIDE ALL CONDUIT STUBS WITH A PROTECTIVE COLLAR.
16. INSURE THAT ALL PENETRATIONS OF FIRE WALLS AND DECKS ARE PROPERLY SEALED PER INTERNATIONAL BUILDING CODE 712 AND WITH AN UL APPROVED DEVICE OR FIRE CAULK. REFER TO ARCHITECTURAL PLANS FOR THE LOCATIONS OF RATED FIRE WALLS AND UL ASSEMBLY LOCATIONS AND TYPES AND BID ACCORDINGLY.
17. PROVIDE A CONDUIT EXPANSION JOINTS WITH BONDING JUMPER IN ALL CONDUITS CROSSING AN EXPANSION JOINT. REFER TO ARCHITECTURAL DRAWINGS FOR EXPANSION JOINT LOCATIONS.
18. ALL UNDERGROUND CONDUITS RUNS ENTERING THE BUILDING SHALL BE SEALED TO PREVENT THE ENTRANCE OF MOISTURE.
19. ALL FLEXIBLE CONDUITS ON THE EXTERIOR, IN WET LOCATIONS OR ANY MECHANICAL ROOM SHALL BE LIQUID TIGHT WITH SUITABLE FITTINGS.
20. THE CONTRACTOR SHALL BE RESPONSIBLE FOR SEALING AROUND DEVICES, PENETRATIONS, OUTLETS, AND CONDUITS THAT PENETRATE THE WALLS ABOVE THE CEILING TO MAINTAIN SOUNDPROOFING. CONTRACTOR SHALL VERIFY THAT THE OPENINGS SIZES ARE LESS THAN 1/2" ON ALL SIDES OF THE PENETRATIONS. ALL OPENINGS IN EXCESS OF 1/2" SHALL BE CAULKED/SEALED WITH SHEET ROCK MUD. THE DRYWALL CONTRACTOR SHALL BE RESPONSIBLE FOR SEALING PENETRATIONS IN PLACE WHEN THE SHEETROCK ARE INSTALLED. PENETRATIONS MADE AFTER THE DRYWALL CONTRACTOR HAS FINISHED IN AN AREA SHALL BE SEALED BY THE CONTRACTOR MAKING THE PENETRATION.
21. PLANNED INTERRUPTIONS OF UTILITY SERVICE TO ANY EXISTING FACILITY OR AREAS WITHIN ANY FACILITY AFFECTED BY THIS CONTRACT, SHALL BE CAREFULLY PLANNED AND COORDINATED IN ADVANCE OF THE REQUESTED INTERRUPTION. THE CONTRACTOR SHALL NOT INTERRUPT SERVICES UNTIL SPECIFIED APPROVAL HAS BEEN GRANTED. THE REQUEST SHALL INDICATE SERVICES AND AREAS TO BE AFFECTED, DATE AND TIME OF INTERRUPTION AND DURATION OF OUTAGE. REQUEST FOR INTERRUPTION OF SERVICE WILL NOT BE APPROVED UNTIL ALL EQUIPMENT AND MATERIAL REQUIRED FOR THE COMPLETION OF THAT PARTICULAR PHASE OF WORK ARE ON THE JOB SITE. CONTRACTOR IS RESPONSIBLE FOR ALL OVERTIME, HOLIDAY, AND WEEKEND PAY TO THEIR EMPLOYEES TO DO THIS WORK DURING SCHEDULED NON-NORMAL WORK HOURS.
22. ALL EMERGENCY LIGHTS AND EXIT SIGNS SHALL HAVE AN EMERGENCY BATTERY BALLAST CONNECTED AHEAD OF LOCAL SWITCHING.
23. CONTRACTOR IS RESPONSIBLE FOR PROPER SENSITIVITY AND TIME DELAY SETTINGS FOR OCCUPANCY SENSORS. PROVIDE PROPER NUMBER OF POWER PACKS AND LOCATE POWER PACKS AND OCCUPANCY SENSORS ACCORDING TO MANUFACTURER'S RECOMMENDATIONS.
24. ALL JUNCTION BOX COVERS ABOVE THE CEILING SHALL BE CLEARLY MARKED WITH WHICH CIRCUITS OR ELECTRICAL SYSTEM THEY CONTAIN.

Gunn & Associates, P.C.
Consulting Engineers
3102 Highway 14
Millbrook, AL 36054
Tel: 334.285.1273
1200 Providence Park, Suite 200
Birmingham, AL 35242
GA#22-071

S|S&|L ARCHITECTS
Montgomery | Dothan | Auburn | Huntsville | Pensacola
WWW.SSLARCH.COM | 256.285.1063

Rev.	Description	Date

Job Number 21112

Date NOVEMBER 1, 2024

Drawn By KRG, JBG

Checked By JBG

Project Title

HUNTSVILLE READINESS CENTER
5180 MOORE'S MILL ROAD
HUNTSVILLE AL, 35811

Sheet Title
ELECTRICAL LEGEND & NOTES

Sheet Number
E0.2

ALABAMA REGISTERED
NO. 20431
PROFESSIONAL
11-01-24
ENGINEER
JOHN BARRY GRAILEE

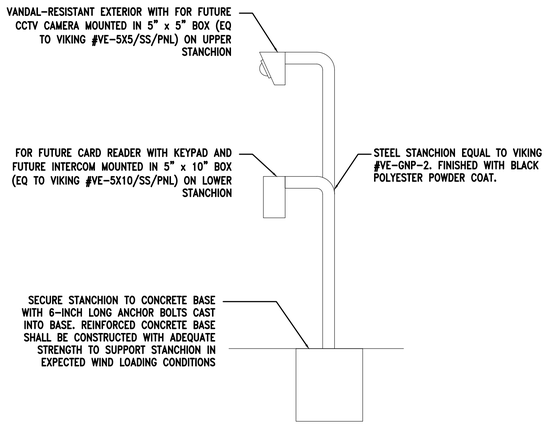

2 / E1.1 DETAIL - REQUIREMENTS FOR GATE SYSTEM

SCALE: NONE

N

1 / E1.1 SITE PLAN - ELECTRICAL

SCALE: 1" = 100'-0"

UNDERGROUND UTILITY NOTES:

1. THE UNDERGROUND UTILITY PORTION OF THIS PROJECT CONSISTS OF BUT IS NOT LIMITED TO:
   a. TRENCHING/BACKFILLING FOR DUCT LINES AND CONDUIT SYSTEMS
   b. DUCTBANK INSTALLATIONS
   c. LOW VOLTAGE CONDUCTOR INSTALLATION
   d. PATCH/REPAIR ALL DAMAGED SURFACES AS A RESULT OF DUCTLINE INSTALLATIONS
2. INSTALLATION SHALL COMPLY WITH THE REQUIREMENTS OF THE NATIONAL ELECTRICAL SAFETY CODE (NESC) AND THE NATIONAL ELECTRICAL CODE (NEC).
3. ALL CONDUCTIVE PARTS OF EQUIPMENT, ENCLOSURES, SUPPORTS, FRAMES, CASES, CONDUIT SYSTEMS AND SURGE ARRESTORS, CABLE SHEATHS, CABLE SHIELDS, COMMON NEUTRALS, ETC., SHALL BE GROUNDED. UNLESS NOTED OTHERWISE CONNECTIONS BELOW GRADE SHALL BE FUSION-WELDED AND ABOVE GRADE FUSION-WELDED OR BOLTED SOLDERLESS. ALL GROUND CONDUCTORS SHALL BE COPPER.
4. ALL CLEARANCES SHALL BE MAINTAINED PER NESC AND NEC. ALL PARTS, DEVICES, EQUIPMENT, ETC. WHICH REQUIRE MAINTENANCE, ADJUSTMENT, OPERATION OR EXAMINATION DURING NORMAL NETWORK OPERATION SHALL BE ARRANGED SO AS TO BE ACCESSIBLE BY THE PROVISION OF ADEQUATE WORKING SPACES, WORKING FACILITIES AND CLEARANCES. UNLESS NOTED OTHERWISE ALL CLEARANCES ARE MEASURED FROM SURFACE TO SURFACE.
5. ALL DIMENSIONS INDICATED IN THESE DOCUMENTS ARE FOR REFERENCE AND COORDINATION PURPOSES ONLY. THE CONTRACTOR IS RESPONSIBLE FOR VERIFYING ALL DIMENSIONS IN THE FIELD.
6. UNLESS OTHERWISE SHOWN OR DIRECTED DUCT LINES SHALL NOT BE LOCATED DIRECTLY UNDER STRUCTURES AND NOT DIRECTLY UNDER OR OVER OTHER SUBSURFACE STRUCTURES. WHERE DUCT LINES ARE REQUIRED TO CROSS OTHER UTILITIES SUCH AS SEWERS, WATER LINES, OTHER POWER LINES, COMMUNICATION LINES, ETC., ADEQUATE SUPPORT SHALL BE PROVIDED ON EACH SIDE OF THE CROSSING TO PREVENT TRANSFERRING ANY DIRECT LOAD ONTO THE OTHER LINE. DUCT LINES SHALL BE SO INSTALLED AS TO PREVENT HEAT TRANSFER BETWEEN ANY HEAT PRODUCING LINES AND/OR EQUIPMENT TO DUCT LINES.
   a. ROUTING SHOWN ON DRAWINGS IS TYPICAL AND THE CONTRACTOR SHALL PROPOSE FINAL ROUTING BASED UPON ACTUAL FIELD DIMENSIONS, CONDITIONS AND EXISTING UNDERGROUND UTILITIES AND STRUCTURES.
   b. PRIOR TO TRENCHING, THE CONTRACTOR SHALL STAKE OUT THE ENTIRE NETWORK ARRANGEMENT. ONE GRADE A WOODEN STAKE WITH RED FLAG SHALL BE DRIVEN EVERY 50'-0" AND AT EACH CHANGE OF DIRECTION. FOUR STAKES SHALL BE DRIVEN TO OUTLINE EQUIPMENT AND/OR MANHOLE LOCATIONS. ON PAVEMENTS RED PAINT SHALL BE USED TO OUTLINE THE AREAS TO BE CUT. SECURE EXISTING UNDERGROUND UTILITY INFORMATION FROM THE CONTRACTING OFFICER PRIOR TO PERFORMING ANY TRENCHING.
   c. DEPTHS INDICATED FOR INSTALLATION ARE MINIMUM. ACTUAL DEPTHS MAY VARY DUE TO TERMINATIONS, COMPENSATIONS FOR RADIUS OF VERTICAL TRANSITIONS, EXISTING UTILITY CROSSINGS, ETC. APPROVAL SHALL BE OBTAINED FOR ANY DEPTH LESS THAN INDICATED. TRENCHES SHALL BE OVER-EXCAVATED AS NECESSARY TO ALLOW FOR PROPER TRENCH PREPARATION, DUCT BANK CONSTRUCTION, FORMING AND/OR BACKFILLING REQUIREMENTS.
   d. ALL TRENCHING AND BACKFILL COMPACTION SHALL COMPLY WITH GEOTECHNICAL REPORT AND DIVISION 200.

GENERAL NOTES:

1. LOCATIONS OF RISER POLES, AND TRANSFORMERS SHALL BE COORDINATED PRIOR TO BIDS. ADJUST FEEDER AND CONDUIT LENGTHS ACCORDINGLY. PAY ALL UTILITY COMPANY FEES. BID ACCORDINGLY.
2. COORDINATE WITH POWER RISER DIAGRAMS FOR FEEDER AND CONDUIT SIZES AND ALL OTHER ADDITIONAL REQUIREMENTS NOT SHOWN ON SITE PLAN.
3. ALL UNDERGROUND CONDUITS SHALL BE 36" MINIMUM BELOW GRADE. PRIMARY CONDUIT SHALL BE MINIMUM 48" BELOW GRADE.
4. ALL ROUTING IS SHOWN DIAGRAMMATIC. VERIFY ACTUAL ROUTING AND FIELD CONDITIONS PRIOR TO BIDS.
5. CONTRACTOR SHALL LABEL ALL CONDUITS ENTERING AND EXITING COMMUNICATIONS HAND HOLES AND BACKBOARDS.
6. SEE SHEET E1.2 FOR TYPICAL TRENCH/DUCT DETAILS FOR ALL SURFACES. WORK SHALL COMPLY WITH DETAILS.
7. SEE SHEET COMMUNCIATIONS RISER DIAGRAMS ON SHEET E4.1 FOR ADDITIONAL REQUIREMENTS.

SITE LEGEND

- —UP— — UNDERGROUND PRIMARY
- —US— — UNDERGROUND SECONDARY
- —UC— — UNDERGROUND COMMUNICATIONS
- T — PAD MOUNTED TRANSFORMER
- PB — TELECOMMUNICATIONS PULL BOX, HIGHLINE NO. PHA243624HM2 OR APPROVED EQUAL BY OLDCASTLE OR HUBBELL.
- W — 8"X8"X4" WEATHERPROOF JUNCTION BOX. INSTALL TOP OF BOX FLUSH WITH GRADE.
- PLA — LED SINGLE HEAD SITE LIGHTING POLE WITH FIXTURES. SHOWN TYPE "PLA" PROVIDE RAISED CONCRETE BASE PER DETAILS SHEET E1.2
- PLC — LED DUAL HEAD SITE LIGHTING POLE WITH FIXTURES. 180 DEGREE SEPARATION. SHOWN TYPE "PLC". PROVIDE RAISED CONCRETE BASE PER DETAILS SHEET E1.2
- LFA — LED DUAL POLE-MOUNTED FLOODLIGHTS. SHOWN TYPE "LFA" PROVIDE RAISED CONCRETE BASE PER DETAILS SHEET E1.2
- BA — LED BOLLARD. SHOWN TYPE "BA" PROVIDE CONCRETE BASE PER DETAILS SHEET E1.2
- ▼ — LED GRADE MOUNTED FLOODLIGHT FOR LIGHTING FLAG POLE. PROVIDE RASIED CONCRETE BASE PER DETAILS SHEET E1.2

SHEET NOTES:

1. CONTRACTOR SHALL COORDINATE WITH LOCAL UTILITY COMPANY FOR EXACT STUB OUT FOR PRIMARY CONDUITS AND EXACT LOCATION OF NEW PAD-MOUNTED TRANSFORMER AND ADJUST SECONDARY LENGTHS ACCORDINGLY.
2. PROVIDE POLE BASE FOR THIS FIXTURE. SEE DETAILS SHEET E1.2.
3. ROUTE THRU CONTACTOR/PHOTOCELL ARRANGEMENT INDICATED ON SHEET E2.4.
4. BORE TWO (2) 5" HDPE UNDERGROUND CONDUIT FROM TRANSFORMER TO APCO RISER POLE.
5. SEE COMMUNICATIONS SINGLE LINE DIAGRAM 3/E4.4.

SCALE: 1" = 100'-0

100' 60' 0 100' 200'

GRAPHIC SCALE

Gunn & Associates, P.C.
Consulting Engineers
3102 Highway 14
Millbrook, AL 36054
Tel: 334.285.1273
1200 Providence Park, Suite 200
Birmingham, AL 35242
GA#22-071

S|S&L ARCHITECTS
Montgomery | Dothan | Auburn | Huntsville | Pensacola
WWW.SSLARCH.COM | 256.285.1063

Rev.	Description	Date

Job Number: 21112

Date: NOVEMBER 1, 2024

Drawn By: KRG, JBG

Checked By: JBG

Project Title

HUNTSVILLE READINESS CENTER
5180 MOORE'S MILL ROAD
HUNTSVILLE AL, 35811

Sheet Title: SITE PLAN - ELECTRICAL

Sheet Number: E1.1

ALABAMA REGISTERED
No. 20431 PROFESSIONAL
JOHN BARRY GRAVLEE
ENGINEER
11-01-24

NOTES:

1. CONCRETE SHALL TEST TO BE 4,000 PSI STRENGTH IN 28 DAYS.
2. SEE LIGHT FIXTURE SCHEDULE FOR LIGHTING CONFIGURATION.
3. ALL DIMENSIONS SHALL BE COORDINATED AND COMPLY WITH GEOTECHNICAL REPORT.
4. INSTALLATION SHALL COMPLY WITH MANUFACTURER'S RECOMMENDATIONS IF MORE STRINGET.
5. POLE BASE SHALL BE IN FULL CONTACT WITH THE CONCRETE BASE.
6. MINIMUM DIMENSION SHALL BE DETERMINED BY POLE BASE ANCHOR BOLT SPACING PLUS 2" MINIMUM CONCRETE COVER AROUND REBAR SET OUTSIDE ANCHOR BOLTS.

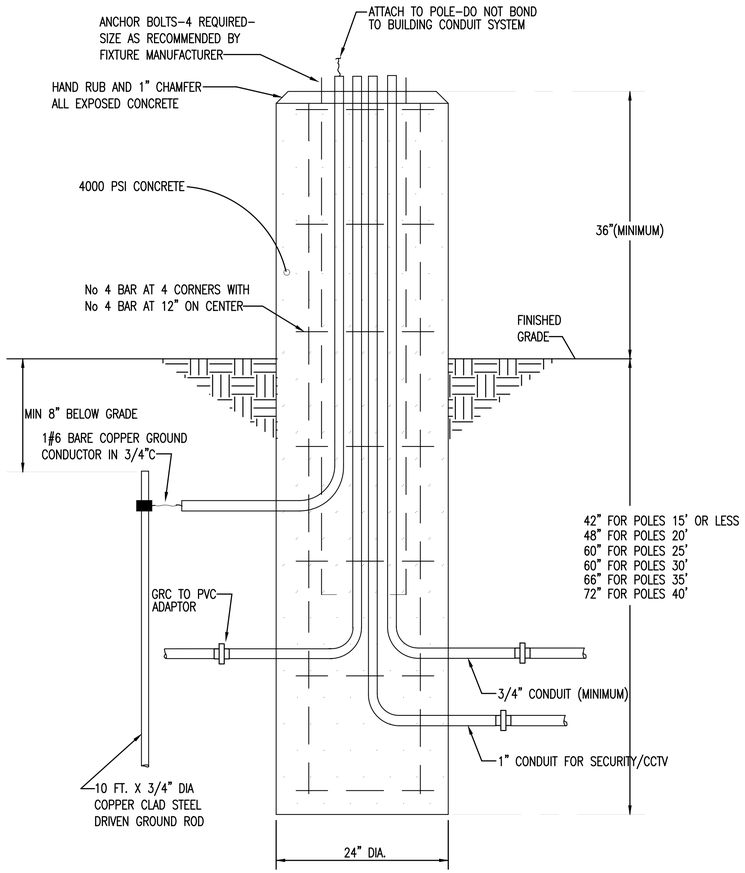

1 E1.2 DETAIL-TYPICAL POLE BASE FOR LUMINAIRE MARKS "PLA", "PLB", "PLC" & "LFA"
NO SCALE

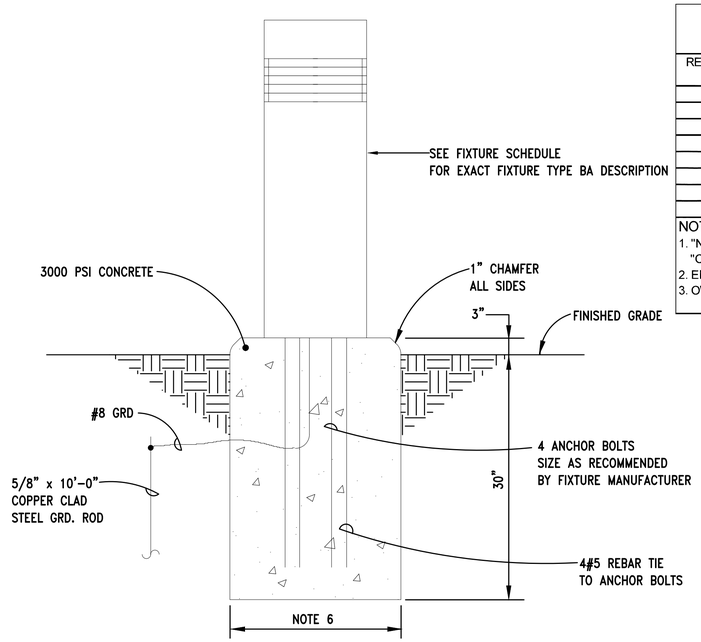

2 E1.2 DETAIL - TYPICAL BOLLARD TYPE "BA" CONCRETE BASE
NO SCALE

LIGHTING CONTROL PANEL - (LCPR)

RELAY#	PANEL	CIRCUIT #	CIRCUIT VOLTAGE	FUNCTION	TYPE	NOTES
a	LPR	14,16	208	ON/OFF	LED	NOTES 1 & 3 (TWO POLE RELAY)
b	LPR	14,16	208	NL	LED	NOTES 1 & 3 (TWO POLE RELAY)
c	LPR	18,20	208	ON/OFF	LED	NOTES 1 & 3 (TWO POLE RELAY)
d	LPR	22	120	ON/OFF	LED	NOTE 3
e	LPR	22	120	NL	LED	NOTE 1 & 3 (SINGLE POLE RELAY)
f	LPR	41	120	ON/OFF	LED	NOTE 1
g			120	ON/OFF	LED	SPARE
h			120	ON/OFF	LED	SPARE

NOTES:
1. "NL" PHOTOCELL ON - PHOTOCELL OFF
"OL" PHOTOCELL ON - ASTRONOMICAL CLOCK TURNS LIGHTS OFF AT 12 MIDNIGHT
2. EMERGENCY BATTERY PACKS AND EXIT SIGNS SHALL BE CONNECTED AHEAD OF SWITCHING WITH A CONSTANT HOT LEG.
3. OWNER PRESET ON/OFF WITH LOCAL OVER RIDE.

LIGHTING CONTROL PANEL - (LCPU)

RELAY#	PANEL	CIRCUIT #	CIRCUIT VOLTAGE	FUNCTION	TYPE	NOTES
a	LPU	14,16	208	ON/OFF	LED	NOTES 1 & 3 (TWO POLE RELAY)
b	LPU	14,16	208	NL	LED	NOTES 1 & 3 (TWO POLE RELAY)
c	LPU	18,20	208	ON/OFF	LED	NOTES 1 & 3 (TWO POLE RELAY)
d	LPU	18,20	208	NL	LED	NOTES 1 & 3 (TWO POLE RELAY)
e	LPU	22,24	208	ON/OFF	LED	NOTES 1 & 3 (TWO POLE RELAY)
f	LPU	22,24	208	NL	LED	NOTES 1 & 3 (TWO POLE RELAY)
g	LPU	26	120	ON/OFF	LED	NOTE 1
h	LPU		120	ON/OFF	LED	SPARE

NOTES:
1. "NL" PHOTOCELL ON - PHOTOCELL OFF
"OL" PHOTOCELL ON - ASTRONOMICAL CLOCK TURNS LIGHTS OFF AT 12 MIDNIGHT
2. EMERGENCY BATTERY PACKS AND EXIT SIGNS SHALL BE CONNECTED AHEAD OF SWITCHING WITH A CONSTANT HOT LEG.
3. OWNER PRESET ON/OFF WITH LOCAL OVER RIDE.

Gunn & Associates, P.C.
Consulting Engineers
3102 Highway 14
Millbrook, AL 36054
Tel: 334.285.1273
1200 Providence Park, Suite 200
Birmingham, AL 35242
GA#22-071

SS&L ARCHITECTS
Montgomery | Dothan | Auburn | Huntsville | Pensacola
WWW.SSLARCH.COM | 256.285.1063

Rev.	Description	Date

Job Number 21112
Date NOVEMBER 1, 2024
Drawn By KRG, JBG
Checked By JBG

Project Title
HUNTSVILLE READINESS CENTER
5180 MOORE'S MILL ROAD
HUNTSVILLE AL, 35811

Sheet Title
POLE BASE DETAILS & LIGHTING CONTROL SCHEDULES

Sheet Number
E1.2

ALABAMA REGISTERED NO. 20431 PROFESSIONAL ENGINEER JOHN BARRY GRAY, P.E.
11-01-24

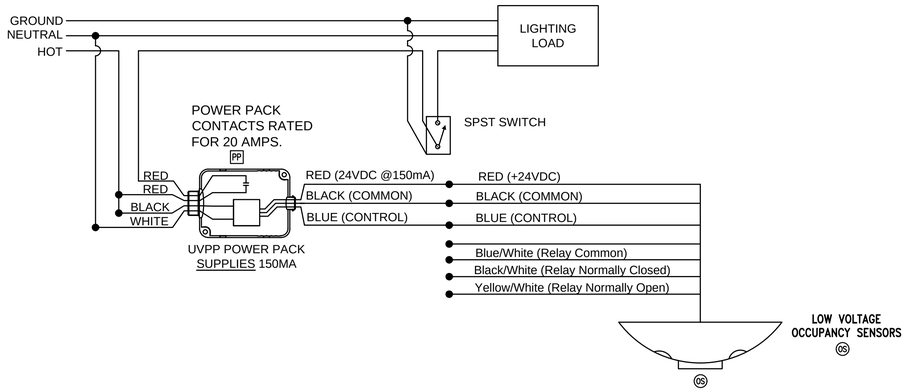

2 E2.1 TYPICAL SINGLE SWITCH OCCUPANCY SENSOR WIRING DIAGRAM

NO SCALE

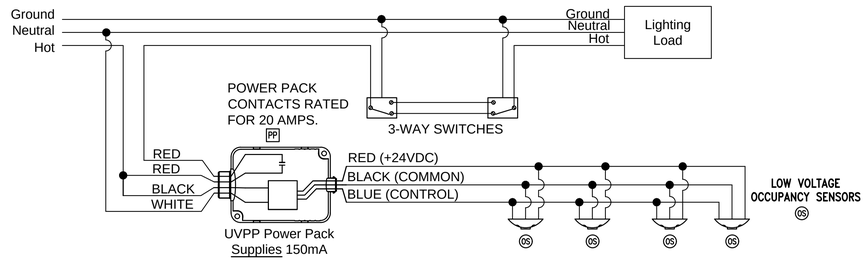

3 E2.1 TYPICAL 3-WAY SWITCHING OCCUPANCY SENSOR WIRING DIAGRAM

NO SCALE

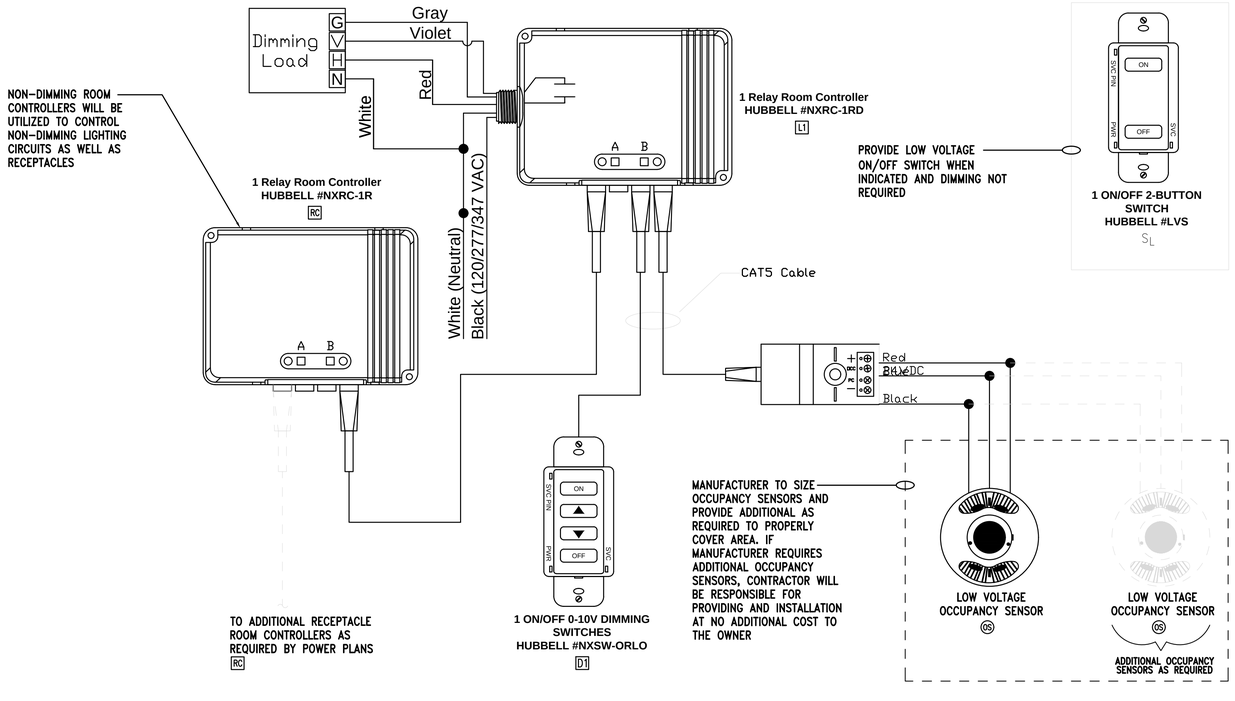

1 E2.1 TYPICAL MULTIPLE OCCUPANCY SENSOR, SINGLE 0-10V DIMMING SYSTEM, AND MULTIPLE ROOM RECEPTACLE CONTROLLER DETAIL

NO SCALE

OCCUPANCY SENSOR AND CONTROL NOTES:

1. OCCUPANCY SENSORS SHALL BE VACANCY TYPE WITH DUAL TECHNOLOGY DETECTION AND 20-MINUTE CUTOFF TIME.
2. OCCUPANCY SENSOR MANUFACTURER PROVIDER WILL BE RESPONSIBLE FOR SIZING THE OCCUPANCY SENSORS IN EACH SPACE. PROVIDE THIS SIZING TO THE ENGINEER DURING SUBMITTAL PHASE FOR APPROVAL. PROVIDE ADDITIONAL OCCUPANCY SENSORS AS REQUIRED TO FULLY COVER ALL SPACES. IF ADDITIONAL OCCUPANCY SENSORS OR ANY OTHER EQUIPMENT IS REQUIRED IT WILL BE THE RESPONSIBILITY OF THE CONTRACTOR TO PROVIDE AND INSTALL. IT WILL BE THE CONTRACTOR'S RESPONSIBILITY TO COORDINATE THIS WITH LIGHTING MANUFACTURER PRIOR TO BIDS AND COVER THE COST OF ALL MATERIAL AND LABOR FOR ANY ADDITIONAL OCCUPANCY SENSORS.
3. ALL OCCUPANCY SENSORS LOCATIONS ARE APPROXIMATE, REFER TO MANUFACTURER'S INSTALLATION INSTRUCTIONS FOR EXACT MOUNTING AND SPACING REQUIREMENTS PRIOR TO INSTALLATION.
4. ULTRASONIC CEILING MOUNTED OCCUPANCY SENSORS SHALL BE LOCATED A MINIMUM OF SIX (6) FEET FROM HVAC SUPPLY/RETURN VENTS.
5. CONTRACTOR IS RESPONSIBLE FOR PROPER SENSITIVITY AND TIME DELAY SETTINGS FOR OCCUPANCY SENSORS, FOLLOWING THE MANUFACTURER'S RECOMMENDED PLACEMENT, AND FIELD VERIFICATION OF CIRCUITS WITH RESPECT TO POWER PACK PLACEMENT.
6. OCCUPANCY SENSORS MOUNTED OVER DOORWAYS SHALL BE PLACED ONE (1) FOOT INSIDE THRESHOLD.
7. LIGHTING CONTROL SYSTEM IS SPECIFIED AROUND THE HUBBELL AUTOMATION SYSTEM. CONTRACTOR SHALL PROVIDE ALL MATERIALS, DEVICES, WIRING, CONNECTIONS, AND PROGRAMMING NEEDED IF ANY OTHER LIGHITNG CONTROL SYSTEM SUBMITS FOR APPROVAL AND IS PROVIDED.
8. WATT STOPPER AND N-LIGHT ARE APPROVED EQUALS.
9. CONTRACTOR SHALL GROUND ALL JUNCTION BOXES CONTAINING LOW VOLTAGE SWITCHES OR ANY OTHER TYPE LIGHTING CONTROL DEVICE WITH #12 GRD.

PLENUM:

1. ALL CABLING NOT IN CONDUIT ABOVE CEILINGS SHALL BE PLENUM RATED.

Gunn & Associates, P.C.
Consulting Engineers
3102 Highway 14
Millbrook, AL 36054
Tel: 334.285.1273
1200 Providence Park, Suite 200
Birmingham, AL 35242
GA#22-071

S|S&L ARCHITECTS
Montgomery | Dothan | Auburn | Huntsville | Pensacola
WWW.SSLARCH.COM | 256.285.1063

Rev.	Description	Date

Job Number 21112

Date NOVEMBER 1, 2024

Drawn By KRG, JBG

Checked By JBG

Project Title

HUNTSVILLE READINESS CENTER
5180 MOORE'S MILL ROAD
HUNTSVILLE AL, 35811

Sheet Title
LIGHTING CONTROL DETAILS & NOTES

Sheet Number
E2.1

ALABAMA REGISTERED NO. 20431 PROFESSIONAL
11-01-24
JOHN BARRY GRAVLEE ENGINEER

COMMUNICATION NOTES:

1. PROVIDE 5/8" STRUT ASSEMBLY AT TOP AND BOTTOM OF TBB TO SUPPORT ALL CONDUITS TERMINATING AT BACKBOARD.
2. TBB SHALL BE 3/4" PLYWOOD EXTERIOR RATED AND CUT TO COVER ALL WALLS OR AS INDICATED. PAINT WITH TWO COATS OF FIRE RETARDENT PAINT. MOUNT 2' AFF.
3. PROVIDE A PLASTIC BUSHING OR PROTECTIVE COLLAR AT EACH CONDUIT TERMINATION, INCLUDING TERMINATIONS ABOVE THE CEILING, AT CABLE TRAY, OR AT TBB.
4. ALL CONDUIT TERMINATIONS SHOULD BE DONE EVENLY AT THE TOP AND BOTTOM OF TBB. TERMINATIONS SHALL BE MADE WITHIN THE FIRST FEW INCHES OF THE TBB.
5. SEAL ALL CONDUITS FROM THE EXTERIOR WITH A SEALING COMPOUND, ONCE ALL CABLING HAS BEEN INSTALLED.
6. PROVIDE GROUND BUS FOR EACH TBB. SEE GROUND BUS INSTALLATION DETAIL.
7. PROVIDE ALL CONDUITS WITH PULLWIRES.
8. STENCIL ALL JUNCTION BOX COVERS ABOVE THE CEILING WITH 2" LETTERS THAT READ "COMM".
9. ELECTRICAL CONTRACTOR WILL BE RESPONSIABLE FOR ALL RACEWAYS, CABLE TRAY, CABLING, PATCH PANELS, TERMINATIONS, BACKBOARDS, ETC. SEE RISER DIAGRAM, DETAILS, AND SPECIFICATIONS FOR FURTHER EQUIPMENT REQUIREMENTS.

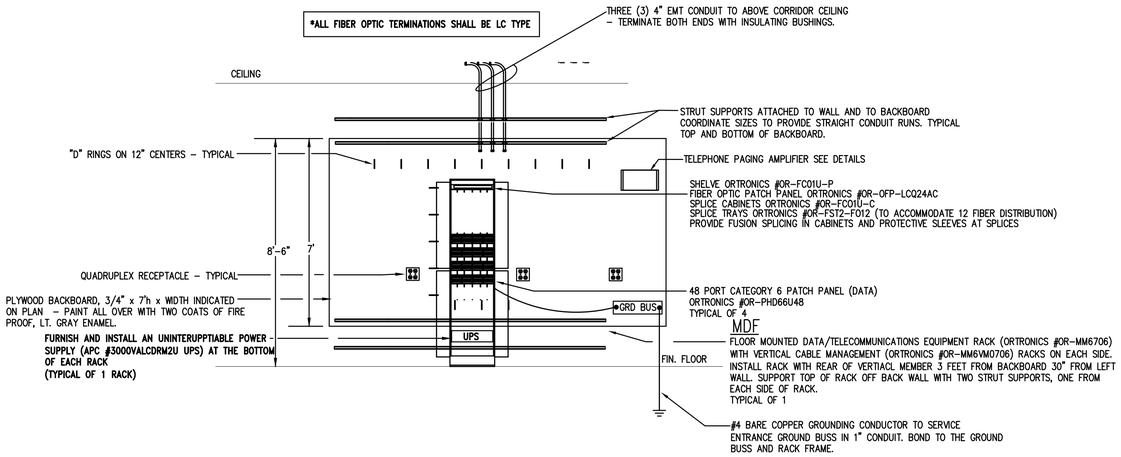

1 E4.1 COMMUNICATIONS - MDF RISER DIAGRAM

NO SCALE

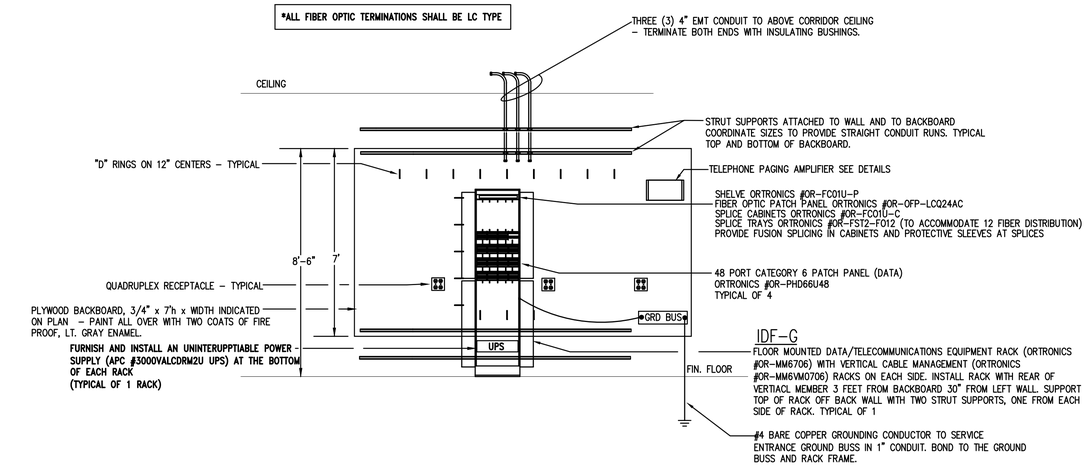

2 E4.1 COMMUNICATIONS - IDF-G RISER DIAGRAM

NO SCALE

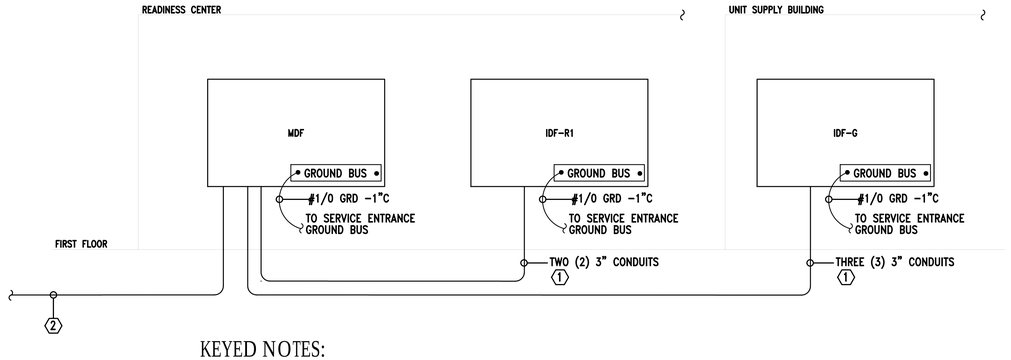

KEYED NOTES:

1. CONTRACTOR SHALL PROVIDE TWO (2) 3 INCH CONDUITS. PROVIDE 3 CELL MAXCELL IN EACH CONDUIT AND PROVIDE 500# MULE TAPE IN EACH CELL OF BOTH MAXCELL RUNS. IN ONE CELL OF ONE CONDUIT PROVIDE AND INSTALL A SINGLE SHEATH 12 STRAND SINGLE MODE 9/125 MICRON OS2 FIBER OPTIC CABLE (BERK-TEK NO PDR012AB0505-I/O(BLA) INTERCONNECTING THE MDF IN THE READINESS CENTER (MDF-R) TO IDF-R1 WITHIN THE READINESS CENTER. USE SPLICE-ON TYPE LC CONNECTORS FOR ALL FIBER RUNS. TERMINATE AND TEST ALL FIBERS IN ALL CABLE RUNS.
2. PROVIDE TWO (2) 4 INCH CONDUITS, EACH CONDUIT WITH 4 CELL MAXCELL AND 500# PULL TAPE. COORDINATE WITH OWNER'S COMMUNICATIONS SERVICE PROVIDER FOR INCOMING POINT OF SERVICE. SEE ALSO SITE PLAN E1.1 FOR COMMUNICATIONS CONDUIT SYSTEM TO PUBLIC RIGHT-OF-WAY.
3. CONTRACTOR SHALL PROVIDE TWO (2) 3 INCH CONDUITS. PROVIDE 3 CELL MAXCELL IN EACH CONDUIT AND PROVIDE 500# MULE TAPE IN EACH CELL OF BOTH MAXCELL RUNS. IN ONE CONDUIT PROVIDE AND INSTALL A SINGLE SHEATH 24 STRAND SINGLE MODE 9/125 MICRON OS2 FIBER OPTIC CABLE (BERK-TEK NO PDR024AB0707-I/O(BLA) INTERCONNECTING THE MDF IN THE READINESS CENTER (MDF-R) TO THE NEW UNIT STORAGE BUILDING. USE SPLICE-ON TYPE LC CONNECTORS FOR ALL FIBER RUNS. TERMINATE AND TEST ALL FIBERS IN ALL CABLE RUNS.

3 E4.1 COMMUNICATION BACKBOARD RISER DIAGRAM

NO SCALE

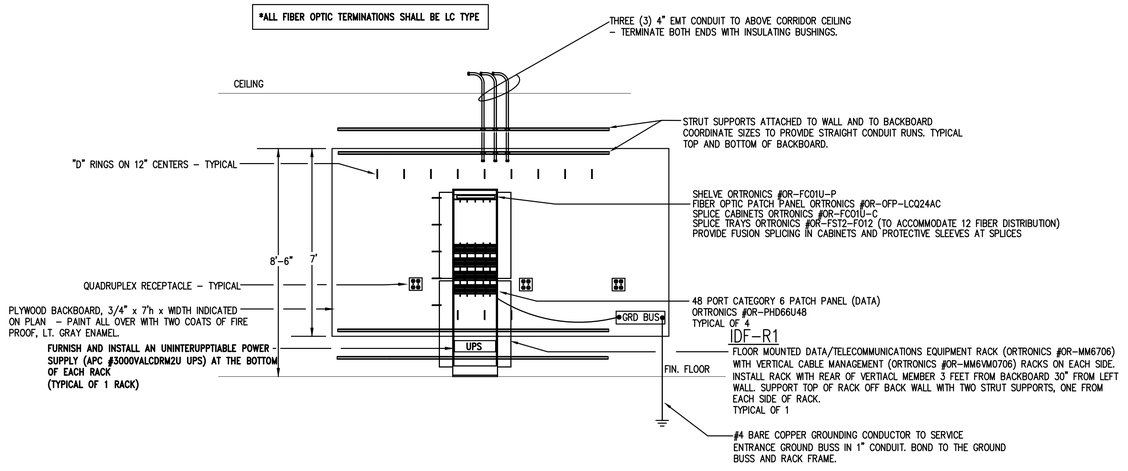

4 E4.1 COMMUNICATIONS - IDF-R1 RISER DIAGRAM

NO SCALE

Gunn & Associates, P.C.
Consulting Engineers
3102 Highway 14
Millbrook, AL 36054
Tel: 334.285.1273
1200 Providence Park, Suite 200
Birmingham, AL 35242
GA#22-071

SS&L ARCHITECTS
Montgomery | Dothan | Auburn | Huntsville | Pensacola
WWW.SSLARCH.COM | 256.285.1063

Rev.	Description	Date

Job Number 21112

Date NOVEMBER 1, 2024

Drawn By KRG, JBG

Checked By JBG

Project Title

HUNTSVILLE READINESS CENTER
5180 MOORE'S MILL ROAD
HUNTSVILLE AL, 35811

Sheet Title
COMMUNICATIONS SINGLE LINE DIAGRAM DETAILS & NOTES

Sheet Number
E4.1

ALABAMA REGISTERED NO. 20431 PROFESSIONAL ENGINEER JOHN BARRY GRAILEE 11-01-24

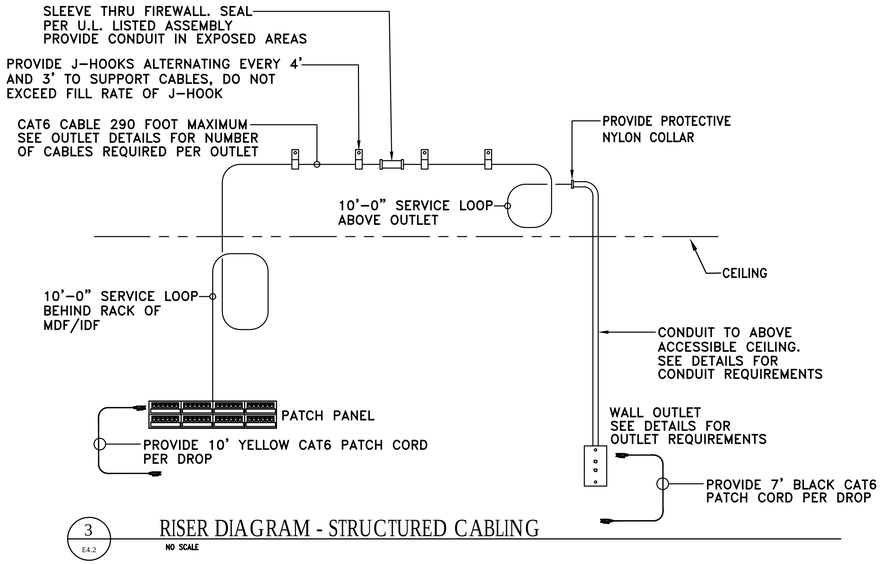

3 E4.2 RISER DIAGRAM - STRUCTURED CABLING

NO SCALE

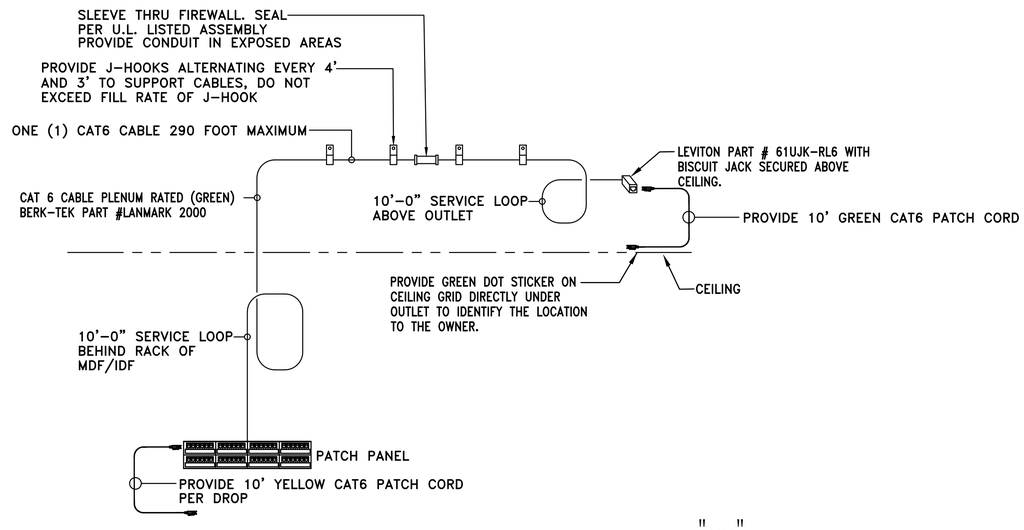

4 E4.2 DETAIL - TYPICAL WIRELESS ACCESS POINT OUTLET

NO SCALE

SHEET NOTES:

1. CONTRACTOR WILL BE ALLOWED TO USE J–HOOKS INSTEAD OF CONDUIT FROM THE WHERE THE CONDUIT STUBS UP ABOVE THE ACCESSIBLE CEILING TO THE COMMUNICATIONS RACK. J–HOOKS WILL HAVE TO BE PROVIDED EVERY 4' MINIMUM IF THIS OPTION IS USED. PROVIDE J–HOOK'S CLOSER IF NEEDED.

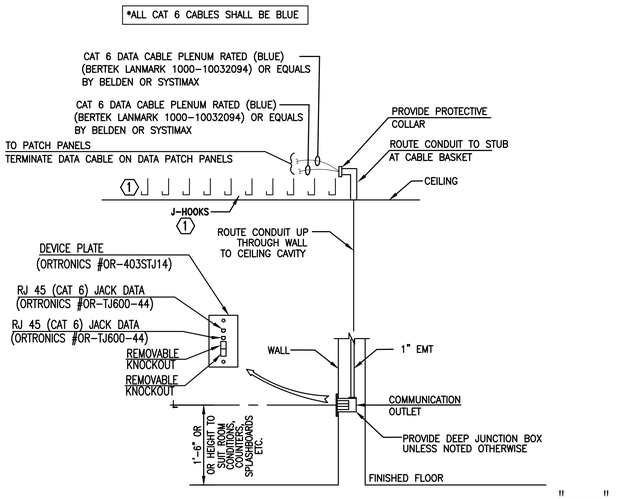

1 E4.2 DETAIL - TYPICAL COMMUNICATION OUTLET

NO SCALE

PAGING LEGEND

Ⓢ	SPEAKER, BACK CAN, SUPPORTS, BAFFLED CONNECTED TO AMPLIFIER ZONE.
ⓈH	WALL MOUNTED SPEAKER AND SUPPORTS. (WEATHERPROOF WHEN INDICATED)
—S—	CONDUIT AND CABLE AS REQUIRED.

PAGING SYSTEM NOTES

1. PAGING SYSTEM SHALL BE INSTALLED TO INCLUDE 1 ZONE OF PAGING.
2. THE PAGING SYSTEM SHALL BE SEPARATE FROM THE FIRE ALARM SYSTEM.
3. PROVIDE COMPLETE WITH AMPLIFIER.

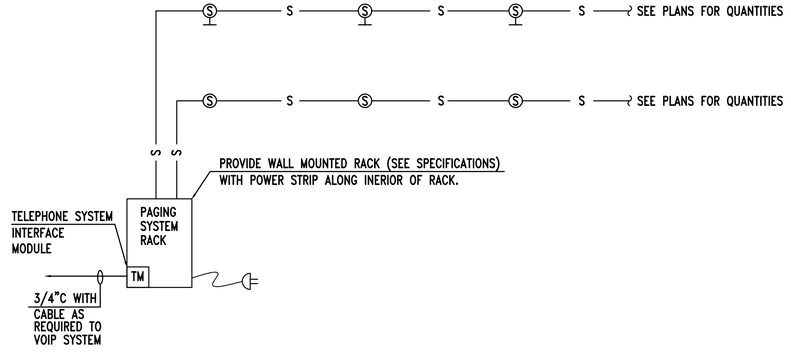

2 E4.2 RISER DIAGAM - PAGING SYSTEM (TYPICAL EACH BUILDING)

NO SCALE

Gunn & Associates, P.C.
Consulting Engineers
3102 Highway 14
Millbrook, AL 36054
Tel: 334.285.1273
1200 Providence Park, Suite 200
Birmingham, AL 35242
GA#22-071

SS&L ARCHITECTS
Montgomery | Dothan | Auburn | Huntsville | Pensacola
WWW.SSLARCH.COM | 256.285.1063

Rev.	Description	Date

Job Number 21112

Date NOVEMBER 1, 2024

Drawn By KRG, JBG

Checked By JBG

Project Title

HUNTSVILLE READINESS CENTER
5180 MOORE'S MILL ROAD
HUNTSVILLE AL, 35811

Sheet Title
COMMUNICATIONS DETAILS & NOTES

Sheet Number
E4.2

ALABAMA REGISTERED
NO. 20431
PROFESSIONAL
11-01-24
ENGINEER
JOHN BARRY GRAILEE

LIGHTING FIXTURE SCHEDULE

TYPE:	MANUFACTURER NUMBER AND EQUALS:	VOLTAGE:	MOUNTING:	LAMP TYPE:	DESCRIPTION:
A	COOPER NO. VHB-1824-W-UNV-L940-U OR PRIOR APPROVED EQUALS BY WILLIAMS OR HUBBELL	MVOLT	SUSPENDED	LED	24,000 OR 18,000 SELECTABLE LUMENS LED HIGH BAY LIGHTING WITH ACRYLIC LENS.
BA	COOPER NO. BRT6-A4-740-U-T4-42-COLOR BY ARCHITECT OR EQUALS BY KIM OR GARDCO	MVOLT	POLE	LED	42" LED BOLLARD
D1	COOPER NO. HC6-2000LUMEN-UNV-61-MD-TRIM AND FLANGE BY ARCH OR PRIOR APPROVED EQUALS BY HUBBELL OF FOCAL POINT	MVOLT	RECESSED	LED	6 INCH 2000 LUMEN LED DOWNLIGHT 4000K TEMPETURE LAMPS MINIMUM 80 CRI. WET LOCATION
D2	COOPER NO. HC6-3000LUMEN-UNV-61PS-MD-TRIM AND FLANGE BY ARCH OR PRIOR APPROVED EQUALS BY HUBBELL OF FOCAL POINT	MVOLT	RECESSED	LED	6 INCH 3000 LUMEN LED DOWNLIGHT 4000K TEMPETURE LAMPS MINIMUM 80 CRI. WET LOCATION
D3	COOPER NO. HC6-1500LUMEN-UNV-61PS-MD-TRIM AND FLANGE BY ARCH OR PRIOR APPROVED EQUALS BY HUBBELL OF FOCAL POINT	MVOLT	RECESSED	LED	6 INCH 1500 LUMEN LED DOWNLIGHT 4000K TEMPETURE LAMPS MINIMUM 80 CRI. WET LOCATION
FL1	HUBBELL NO. FLL-28L-95-4000K-8-W-U-Y-DB-SP-FLLVISOR-WALL MOUNTING OR PRIOR APPROVED EQUALS BY LITHONIA OR COOPER	MVOLT	WALL	LED	WALL MOUNTED 10,300 LUMEN FLOOD LIGHT WITH SURGE PROTECTION AND TOP VISOR. UL LISTED FOR WET LOCATIONS. PROVIDE WALL MOUNT WHEN MOUNTED TO BUILDING PROVIDE
FL2	HUBBELL NO. FLL-42L-95-4000K-8-W-U-Y-DB-SP-GRADE MOUNTING OR PRIOR APPROVED EQUALS BY LITHONIA OR COOPER	MVOLT	GRADE	LED	GRADE MOUNTED 10,300 LED FLOOD LIGHT FOR ILLUMINATION OF FLAG. PROVIDE EACH FLOODLIGHT WITH CONCRETE BASE. DARK BRONZE FINISH.
FL3	HUBBELL NO. RFL3-90L-40-4000K-W-U-K-TRN-XX-DB-SP-GRADE MOUNTING OR PRIOR APPROVED EQUALS BY LITHONIA OR COOPER	MVOLT	GRADE	LED	GRADE MOUNTED 5,000 LUMEN LED FLOOD LIGHT FOR ILLUMINATION OF SIGN. PROVIDE EACH FLOODLIGHT WITH CONCRETE BASE. DARK BRONZE FINISH.
LG42	HUBBELL NO. LCAT-22-40K-ML-G-ED-MVOLT OR PRIOR APPROVED EQUALS BY WILLIAMS, OR COOPER	MVOLT	RECESSED	LED	2'X2' 4,200-LUMEN VOLUMETRIC FIXTURE. 0-10V DIMMING
LG48	HUBBELL NO. LCAT-24-40K-ML-G-ED-MVOLT OR PRIOR APPROVED EQUALS BY WILLIAMS, OR COOPER	MVOLT	RECESSED	LED	2'X4' 4,800-LUMEN VOLUMETRIC FIXTURE. 0-10V DIMMING
LG60	HUBBELL NO. LCAT-24-40K-HL-G-ED-MVOLT OR PRIOR APPROVED EQUALS BY WILLIAMS, OR COOPER	MVOLT	RECESSED	LED	2'X4' 6,000-LUMEN VOLUMETRIC FIXTURE. 0-10V DIMMING
LG72	HUBBELL NO. LCAT-24-40K-VL-G-ED-MVOLT OR PRIOR APPROVED EQUALS BY WILLIAMS, OR COOPER	MVOLT	RECESSED	LED	2'X4' 7,200-LUMEN VOLUMETRIC FIXTURE. 0-10V DIMMING
LS1	HUBBELL NO. LCL-4'-4000K-ML-E-U OR PRIOR APPROVED EQUALS BY WILLIAMS, OR COOPER	MVOLT	SURFACE	LED	5,000 LUMEN SURFACE MOUNTED 4'-0" LED STRIP WITH LENSE
LS8	HUBBELL NO. LCL-8'-4000K-LW-E-U OR PRIOR APPROVED EQUALS BY WILLIAMS, OR COOPER	MVOLT	SURFACE	LED	5,512 LUMEN SURFACE MOUNTED 8'-0" LED STRIP WITH LENSE
LS16	COOPER NO. (EIGHT) 8-ILED-LD5-10,000LUMENS PER 8'-W-TANDEM MOUNTING OR PRIOR APPROVED EQUALS BY WILLIAMS OR HUBBELL	MVOLT	SUSPENDED	LED	64' LINEAR FEET OF OF EIGHT 8' INDUSTRIAL LED LINEAR BAY LIGHTS CONNECTED IN TANDEM. 10,000LUMENS PER 10' SECTION.
LSL	ELLIPTIPAR NO. S151-H-(LENGTH AS REQUIRED)-H-06-M-0B-0-940-00 (HCG-1-XX-24-0) OR PRIOR APPROVED EQUAL BY VERSALED OR ALCON	MVOLT	WALL	LED	WALL MOUNTED LED SIGN LIGHER FIXTURE. PROVIDE WITH BRONZE FINISH AND 24 INCH ARM MOUNT AND 4100K COLOR TEMPERATURE. PROVIDE IN LENGTH AS REQUIRED TO SPAN SIGN WIDTH PLUS 6 INCHES ON EITHER SIDE.
LP42	COOPER NO. 22CGTX-4500LUMENS-L840 OR PRIOR APPROVED EQUALS BY WILLIAMS OR HUBBELL	MVOLT	RECESSED	LED	2'X2' 4,500-LUMEN VOLUMETRIC FIXTURE. 0-10V DIMMING WHERE REQUIRED.
LP48	COOPER NO. 22CGTX-4800LUMENS-L840 OR PRIOR APPROVED EQUALS BY WILLIAMS OR HUBBELL	MVOLT	RECESSED	LED	2'X4' 4,800-LUMEN VOLUMETRIC FIXTURE. 0-10V DIMMING WHERE REQUIRED.
LP60	COOPER NO. 22CGTX-6000LUMENS-L840 OR PRIOR APPROVED EQUALS BY WILLIAMS OR HUBBELL	MVOLT	RECESSED	LED	2'X4' 6,000-LUMEN VOLUMETRIC FIXTURE. 0-10V DIMMING WHERE REQUIRED.
LP72	COOPER NO. 22CGTX-7200LUMENS-L840 OR PRIOR APPROVED EQUALS BY WILLIAMS OR HUBBELL	MVOLT	RECESSED	LED	2'X4' 7,200-LUMEN VOLUMETRIC FIXTURE. 0-10V DIMMING WHERE REQUIRED.
LXP	APPLETON NO FNLED-4K-N-BU-S-A-E OR PRIOR APPROVED EQUAL BY LARSON OR RAB	MVOLT	SURFACE	LED	54 INCH LED EXPLOSION PROOF FIXTURE SUITABLE FOR CLASS I, DIVISION 1 AREA. PROVIDE WITH HIGH IMPACT POLYCARBONATE LENS AND FIBERGLASS BODY. MOUNT TO STRUCTURE.
PLA	COOPER NO. ONE (1)GALN-SA3C-740-U-T2 OR EQUALS BY HUBBELL OR GARDCO POLE: HAPCO NO. SSA-30D6-4-DB	MVOLT	POLE	LED ONE HEAD	LED ARCHITECTURAL AREA LIGHT MOUNTED ATOP A 30 FOOT SQUARE ALUMINUM POLE. PROVIDE POLE FOR WIND LOAD OF 90MPH AND INCLUDE VIBRATION DAMPING. TYPE 2 DISTRIBUTION WITH DARK BRONZE FINISH, 21,000 LUMENS PER FIXTURE.
PLB	COOPER NO. ONE (1)GALN-SA3C-740-U-T4W OR EQUALS BY HUBBELL OR GARDCO POLE: HAPCO NO. SSA-30D6-4-DB	MVOLT	POLE	LED ONE HEAD	LED ARCHITECTURAL AREA LIGHT MOUNTED ATOP A 30 FOOT SQUARE ALUMINUM POLE. PROVIDE POLE FOR WIND LOAD OF 90MPH AND INCLUDE VIBRATION DAMPING. TYPE 4W DISTRIBUTION WITH DARK BRONZE FINISH 21,000 LUMENS PER FIXTURE.
PLC	COOPER NO. TWO (2)GALN-SA3C-740-U-T5WQ-180 DEGREE APART OR EQUALS BY HUBBELL OR GARDCO POLE: HAPCO NO. SSA-30D6-4-DB	MVOLT	POLE	LED TWO HEAD	LED ARCHITECTURAL AREA LIGHT MOUNTED ATOP A 30 FOOT SQUARE ALUMINUM POLE. PROVIDE POLE FOR WIND LOAD OF 90MPH AND INCLUDE VIBRATION DAMPING. TYPE 4 DISTRIBUTION WITH DARK BRONZE FINISH 21,000 LUMENS PER FIXTURE.
PLD	COOPER NO. TWO (2)LAS100-TS-T4- 90 DEGREE APART OR EQUALS BY HUBBELL OR GARDCO POLE: HAPCO NO. SSA-30D6-4-DB	MVOLT	POLE	LED TWO HEAD	TWO (2) 33,000 LUMEN POLE MOUNTED LED FLOODLIGHTS WITH TYPE 4M DISTRIBUTION AND 4K LAMPING, MEDIUM DISTRIBUTION. PROVIDE YOKE MOUNT AND AIM FOR MAXIMUM EFFICIENCY. MOUNT FLOODLIGHTS ATOP A 30 FOOT SQUARE STRAIGHT ALUMINUM POLE WITH VIBRATION DAMPING.
WP1	COOPER NO. GAW-SA1-C-740-U-T4W-BZ-10K OR PRIOR APPROVED EQUALS BY HUBBELL, WILLIAMS, OR COOPER	MVOLT	WALL	LED	7500 LUMEN DARK BRONZE EXTERIOR LED LIGHT WITH SURGE PROTECTION. UL LISTED FOR WET LOCATIONS.
EM WALL PACK	COMPASS NO. CU2HLHOSD - WIREGUARDS IN SHOPS OR PRIOR APPROVED EQUAL BY EMERGI-LITE, MCPHILBEN, OR PRESCOLITE	MVOLT	WALL	LED	1,000 LUMEN LED EMERGENCY WALL PACK
EXIT SIGN COMBO "XB"	DUAL-LITE NO. EVCHLU*W12-06L - WIREGUARDS IN SHOPS OR PRIOR APPROVED EQUAL BY EMERGI-LITE, MCPHILBEN, OR PRESCOLITE	MVOLT	UNIVERSAL	LED	THERMOPLASTIC 1000-LUMEN COMBO LED EXIT SIGN EGRESS LIGHT. PROVIDE WITH NUMBER OF FACES AND DIRECTIONAL ARROWS AS SHOWN ON DRAWINGS. COORDINATE COLOR OF SIGNAGE WITH LOCAL REQUIREMENTS. PROVIDE WITH EMERGENCY BATTERY. PROVIDE WIREGUARDS IN SHOPS.
EXIT SIGN COMBO "XC"	DUAL-LITE NO. EVCHLU*W12-06L - DUAL FACE - WIREGUARDS IN SHOPS OR PRIOR APPROVED EQUAL BY EMERGI-LITE, MCPHILBEN, OR PRESCOLITE	MVOLT	UNIVERSAL	LED	THERMOPLASTIC 1000-LUMEN COMBO LED EXIT SIGN EGRESS LIGHT. PROVIDE WITH NUMBER OF FACES AND DIRECTIONAL ARROWS AS SHOWN ON DRAWINGS. COORDINATE COLOR OF SIGNAGE WITH LOCAL REQUIREMENTS. PROVIDE WITH EMERGENCY BATTERY. PROVIDE WIREGUARDS IN SHOPS.

1. ARCHITECT RESERVES THE RIGHT TO SELECT ALL COLORS OR MAKE CUSTOM COLOR DURING SHOP DRAWING REVIEW. BID ACCORDINGLY.
2. COORDINATE MOUNTING OF ALL LUMINAIRES WITH ARCHITECTURAL ELEVATIONS PRIOR TO INSTALLATION
3. PROVIDE EMERGENCY BATTERY BALLAST FOR ALL EMERGENCY TYPE FIXTURES.
4. FOR WARRANTY AND LONG TERM SUPPORT FOR OWNER, ALL LIGHTING FIXTURES SHALL BE PURCHASED THROUGH MANUFACTURER REPRESENTATIVES LOCATED IN THE STATE OF ALABAMA. SUBMITTALS RECEIVED THAT DO NOT COMPLY WITH THIS REQUIREMENT WILL BE REJECTED WITHOUT REVIEW. THE ELECTRICAL CONTRACTOR SHALL BE RESPONSIABLE FOR ANY DELAYS CAUSED BY NON COMPLIANCE WITH THIS REQUIREMENT.
5. ALL INTERIOR LIGHTS SHALL HAVE 4000K TEMPERTURE LAMPS, UNLESS NOTED OTHERWISE.
6. ALL EXTERIOR LIGHTS SHALL HAVE 4000K TEMPERTURE LAMPS.

LUMINAIRE NOTES:

1. ALL LUMINAIRES AND INSTALLATION SHALL BE IN ACCORDANCE WITH NEC, NFPA AND LOCAL CODES. ALL LUMINAIRES SHALL BE UL LISTED AND INSTALLED IN ACCORDANCE WITH THE UL LISTING.
2. LUMINAIRES SHALL BE FURNISHED COMPLETE WITH THE PROPER LAMP BASE OR PIN RECEPTORS, WIRING COMPONENTS, LAMPS, SUPPORTING FRAMES AND DEVICES, ETC., FOR A COMPLETE INSTALLATION.
3. ALL LUMINAIRE DEVICES, COMPONENTS, FITTINGS, SUPPORTS, ETC., SHALL BE COORDINATED TO PROVIDE A COMPLETE UL LISTED INSTALLATION.
4. ALL LUMINAIRES BALLAST, DRIVERS, LAMPS, ETC SHALL BE COMPATIABLE WITH THE LIGHTING CONTROL SYSTEM OR DIMMING CONTROL SYSTEM PROVIDED.
5. SECURE EACH LAY-IN LUMINAIRE AT TWO LOCATIONS TO THE CEILING GRID. PROVIDE BOLTS, SCREWS, RIVETS OR APPROVED CLIPS FOR USE WITH THE TYPE CEILING AND LUMINAIRE INSTALLED.
6. ALL LUMINAIRES IN MECHANICAL AND ELECTRICAL ROOMS SHALL BE INSTALLED TO CLEAR ELECTRICAL EQUIPMENT, DUCT, PIPING, ETC., SUSPEND BELOW OBSTRUCTION WHEN CONFLICTS OCCUR.
7. ALL FLUORESCENT LUMINARIES SHALL BE PROVIDED WITH 3500K COLOR TEMPERATURE LAMPS, UNLESS NOTED OTHERWISE.
8. ARCHITECT RESERVES THE RIGHT TO SELECT ALL COLORS FOR LUMINAIRES, POLES, MOUNTING ACCESSORIES, ETC. DURING SHOP DRAWING REVIEW.
9. COORDINATE LUMINAIRE MOUNTING WITH ARCHITECTURAL ELEVATIONS PRIOR TO INSTALLATION.
10. PROVIDE ALL EXIT SIGNS WITH DIRECTIONAL ARROWS AS SHOWN ON DRAWINGS.
11. CONTRACTOR SHALL PROVIDE ALL SLOPE ADAPTERS, FLANGE KITS, TRIMS, AND ALL OTHER MOUNTING ACCESSORIES AS NEEDED TO MOUNT EACH LUMINAIRE IN CEILINGS AS SHOWN. COORDINATE WITH ARCHITECTURAL REFLECTED CEILING PLANS.
12. ALL EXIT SIGNS AND LUMINAIRES DESIGNATED AS EMERGENCY SHALL BE PROVIDED WITH A MINIMUM 1100 LUMEN EMERGENCY BATTERY BALLAST CAPABLE OF 90 MINUTES OF ILLUMINATION.

NOTES

1. PAINT CONDUIT NIPPLE, SOCKET AND PIPE FLANGE WITH TWO COATS OF ENAMEL.
2. COMPLETE ASSEMBLY TO BE UL LISTED FOR WET LOCATIONS.
3. PHOTOCELL TO BE MOUNTED FACING NORTH FREE FROM ALL SHADOWS WHICH MIGHT CAUSE PHOTOCELL TO TURN LIGHTS ON EARLY. CONTRACTOR SHALL COORDINATE PROPER MOUNTING LOCATION PRIOR TO INSTALLATION.

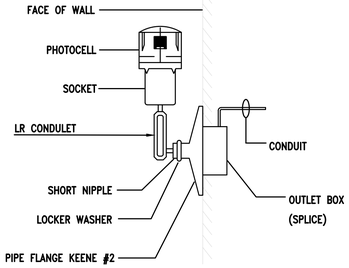

2 / E5.1 DETAIL - INSTALLATION OF PHOTO-CELL
NO SCALE

NOTES:

1. ALL RECESSED LUMINAIRES SHALL BE WIRED FROM A JUNCTION BOX AS SHOWN, INCLUDING LUMINAIRES IN A CONTINUOUS ROW. NO WIRING THRU FIXTURES. NO MORE THAN TWO LUMINAIRES SHALL BE CIRCUITED TO ONE JUNCTION BOX.
2. LUMINAIRE SUPPORT WIRES TO BE A MINUMUM OF #14 GAGE PRE-STRAINED GALVINIZED WIRE ATTACHED AT OPPOSITE CORNERS. LUMINAIRE SHALL BE SUPPORTED TO THE STRUCTURE INDEPENDENT OF THE CEILING GRID.
3. CONDUCTORS IN FLEXIBLE CONDUIT FROM JUNCTION BOX TO LUMINAIRE SHALL CONTAIN AN INSULATED GREEN GROUND WIRE, WITH NEUTRAL AND PHASE CONDUCTORS REQUIRED FOR THE CIRCUITING AND SWITCHING REQUIREMENTS INDICATED.
4. JUNCTION BOXES SHALL BE ACCESSIBLE AND LOCATED WITHIN 1'-6" ABOVE LAY-IN CEILING INSTALLATION. PROVIDE PENDANT ALL-THREAD RODS AND/OR STRUT ASSEMBLIES TO MEET THIS REQUIREMENT WHERE DROP CEILING IS MORE THAN 1'-6" FROM STRUCTURE.
5. CONTRACTOR SHALL INSTALL ALL T-BAR SAFETY CLIPS TO GRID. IF FIXTURE DOES NOT COME WITH GRID SAFETY CLIPS, THEN THE CONTRACTOR SHALL PROVIDE SUPPORT WIRES ON ALL FOUR SIDES.

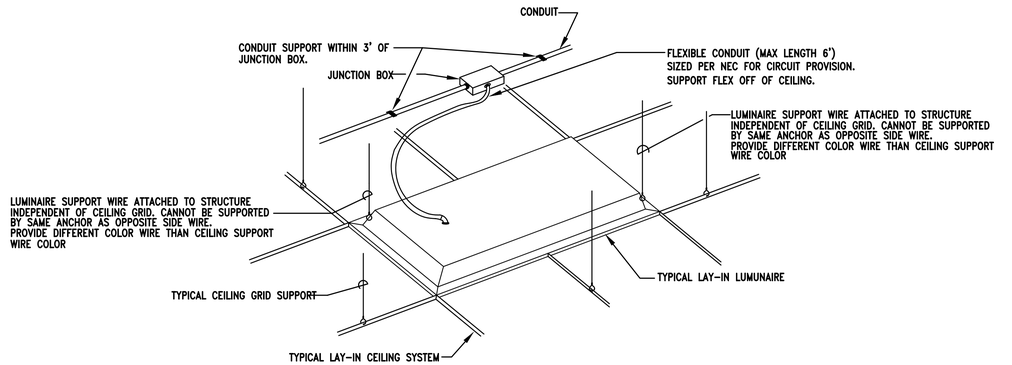

1 / E5.1 DETAIL - TYPICAL LAY-IN LUMINAIRE INSTALLATION
NO SCALE

Gunn & Associates, P.C.
Consulting Engineers
3102 Highway 14
Millbrook, AL 36054
Tel: 334.285.1273
1200 Providence Park, Suite 200
Birmingham, AL 35242
GA#22-071

S|S&L ARCHITECTS
Montgomery | Dothan | Auburn | Huntsville | Pensacola
WWW.SSLARCH.COM | 256.285.1063

Rev.	Description	Date

HUNTSVILLE READINESS CENTER
5180 MOORE'S MILL ROAD
HUNTSVILLE AL, 35811

Job Number 21112
Date NOVEMBER 1, 2024
Drawn By KRG, JBG
Checked By JBG

Project Title

Sheet Title
LUMINAIRE SCHEDULE DETAILS & NOTES

Sheet Number
E5.1

ALABAMA REGISTERED NO. 20431 PROFESSIONAL 11-01-24 ENGINEER JOHN BARRY GRAVLEE

PANELBOARD SER

TYPE: 1600 AMP MAIN CIRCUIT BREAKER | AIC: 65,000 AMPERES | MOUNTED: FREE-STANDING | VOLTAGE: 120/208 VOLTS, 3 PHASE, 4 WIRE

CIRCUIT DIRECTORY	(VA) PER PHASE			AMP	POLE	CIRCUIT NUMBER		AMP	POLE	(VA) PER PHASE			CIRCUIT DIRECTORY
	PHASE A	PHASE B	PHASE C							PHASE A	PHASE B	PHASE C	
PANEL LPR	9,392			125		1	2	400		43,837			PANEL MEA1
		10,900				3	4				44,284		
			7,655		3	5	6		3			43,691	
PANEL KIT	62,285			600		7	8	400		42,240			PANEL MEB1
		56,929				9	10				41,265		
			60,233		3	11	12		3			41,107	
PANEL RC1	5,100			225		13	14	400		28,100			PANEL RA1
		5,100				15	16				35,400		
			4,800		3	17	18		3			29,500	
SPARE				400		19	20	225		12,200			PANEL RA2
						21	22				16,200		
					3	23	24		3			13,600	
SPARE				400		25	26	400		31,150			PANEL RB1
						27	28				30,750		
					3	29	30		3			28,600	
MEC1	3,200			225		31	32	225		1,200			PANEL RB2
		3,200				33	34				1,200		
			2,200		3	35	36		3			0	
MEA2	23,600			225		37	38	60					TVSS DEVICE (NOTE 2)
		24,184				39	40						
			22,337		3	41	42		3				
MEB2	27,770			225		43	44	225					BUSSED SPACE
		27,300				45	46						
			27,800		3	47	48		3				
SPARE				225		49	50	225					BUSSED SPACE
BUSSED SPACE						51	52						
					3	53	54		3				
SPARE				125		55	56	225					BUSSED SPACE
						57	58						
					3	59	60		3				
SUB TOTAL (VA)	103,577	100,313	97,225							158,727	169,099	156,498	SUB TOTAL (VA)

TOTAL LOAD PHASE A: 262,304 (VA)
TOTAL LOAD PHASE B: 269,412 (VA)
TOTAL LOAD PHASE C: 253,723 (VA)
TOTAL LOAD: 785,439 (VA) = 2182 AMPS

NOTES:
1. PANEL SHALL BE UL LISTED FOR SERVICE ENTRANCE.
2. PROVIDE WITH INTEGRAL SURGE SUPPRESSION DEVICE, ACTIVE SINE WAVE TRACKING 120,000 AMPS PER MODE.
3. MAIN BREAKER SHALL BE 100% (FULLY) RATED.
4. PROVIDE PANEL WITH NAME PLATE INDICATING AIC RATING.
5. PROVIDE ARC FAULT LABEL PER DETAIL.
6. PROVIDE 100% RATED BREAKER FOR THIS CIRCUIT.

PANEL LPR

TYPE: 125 AMP MAIN LUG | AIC: 22,000 AMPERES | MOUNTED: SURFACE | VOLTAGE: 120/208 VOLTS, 3 PHASE, 4 WIRE

CIRCUIT DIRECTORY	(VA) PER PHASE			AMP	POLE	CIRCUIT NUMBER		AMP	POLE	(VA) PER PHASE			CIRCUIT DIRECTORY
	PHASE A	PHASE B	PHASE C							PHASE A	PHASE B	PHASE C	
LIGHTING	1,220			20	1	1	2	20	1	1,500			LIGHTING
LIGHTING		1,100		20	1	3	4	20	1		1,600		LIGHTING
LIGHTING			1,525	20	1	5	6	20	1			1,500	LIGHTING
LIGHTING	1,251			20	1	7	8	20	1	1,366			LIGHTING
LIGHTING		1,018		20	1	9	10	20	1		500		LIGHTING
LIGHTING			920	20	1	11	12	20	1				SPARE
LIGHTING	1,750			20	1	13	14	20		1,625			PARKING AREA LIGHTING
LIGHTING		1,620		20	1	15	16		2		1,625		
LIGHTING			830	20	1	17	18	20				750	PARKING AREA LIGHTING
LIGHTING	842			20	1	19	20		2	750			
LIGHTING		1,710		20	1	21	22	20	1		1,500		SIDEWALK LTG
LIGHTING			970	20	1	23	24	20	1				SPARE
LIGHTING	1,180			20	1	25	26	20	1				SPARE
LIGHTING		1,025		20	1	27	28						BUSSED SPACE
LIGHTING			1,025	20	1	29	30						BUSSED SPACE
LIGHTING	1,680			20	1	31	32						BUSSED SPACE
LIGHTING		800		20	1	33	34						BUSSED SPACE
LIGHTING			1,360	20	1	35	36						BUSSED SPACE
LIGHTING	1,565			20	1	37	38						BUSSED SPACE
LIGHTING		1,620		20	1	39	40	20	1		1,000		FACP (NOTE 3)
BLDG OUTSIDE LTG			1,720	20	1	41	42	20	1			1,000	LCPR
SUB TOTAL (VA)	7,017	6,775	5,905							2,375	4,125	1,750	SUB TOTAL (VA)

TOTAL LOAD PHASE A: 9,392 (VA)
TOTAL LOAD PHASE B: 10,900 (VA)
TOTAL LOAD PHASE C: 7,655 (VA)
TOTAL LOAD: 27,947 (VA) = 78 AMPS

NOTES:
1. PANELBOARD TO BE BOLT-ON TYPE WITH DOOR-IN-DOOR CONSTRUCTION.
2. PROVIDE ARC FAULT LABEL PER DETAIL.
3. PROVIDE LOCK HANDLE CIRCUIT BREAKER.

PANELBOARD MEA1

TYPE: 400 AMP MAIN LUG | AIC: 65,000 AMPERES | MOUNTED: SURFACE | VOLTAGE: 120/208 VOLTS, 3 PHASE, 4 WIRE

CIRCUIT DIRECTORY	(VA) PER PHASE			AMP	POLE	CIRCUIT NUMBER		AMP	POLE	(VA) PER PHASE			CIRCUIT DIRECTORY
	PHASE A	PHASE B	PHASE C							PHASE A	PHASE B	PHASE C	
GHP - R1	1,956			30		1	2	20		489			GHP - R18
		1,956				3	4		2		489		
			1,956		3	5	6	20				489	GHP - R19
SPARE				30		7	8		2	489			
						9	10	20			489		GHP - R20
					3	11	12		2			489	
GHP - R3	1,176			20		13	14	20		489			GHP - R21
		1,176			2	15	16		2		489		
GHP - R4			1,040	20		17	18	20				489	GHP -R 22
	1,040				2	19	20		2	489			
GHP - R5		1,428		20		21	22	20			1,176		GHP - R23
			1,428			23	24					1,176	
	1,428				3	25	26	20		1,040			GHP - R24
GHP - R6		583		20		27	28		2		1040		
			583		2	29	30	20				583	GHP - R25
GHP - R7	1,040			20		31	32		2	583			
		1,040			2	33	34	20			1,040		GHP - R26
GHP - R8			1,428	20		35	36		2			1,040	
	1,428					37	38	20	1	1,200			GEN BATTERY CHARGER
		1,428			3	39	40	30			2,000		GEN BLOCK HEATER
SPARE						41	42		2			2,000	
GHP - R9	1,176			20		43	44	50		3,528			GHP - R27
		1,176				45	46				3,528		
			1,176		3	47	48		3			3,528	
GHP - R10	1,956			30		49	50	30		1,956			GHP - R28
		1,956				51	52				1,956		
			1,956		3	53	54		3			1,956	
GHP - R11	1,428			20		55	56	20					SPARE
		1,428				57	58		2				
			1,428		3	59	60	50				3,528	GHP - R30
GHP - R12	2,928			40		61	62			3,528			
		2,928				63	64		3		3,528		
			2,928		3	65	66	50				3,528	GHP - R31
GHP - R13	2,928			40		67	68			3,528			
		2,928				69	70		3		3,528		
			2,928		3	71	72	50				3,528	GHP - R32
GHP - R14	489			20		73	74			3,528			
		489			2	75	76		3		3,528		
GHP - R15			489	20		77	78	50				3,528	GHP R33
	489				2	79	80			3,528			
GHP - R16		489		20		81	82		3		3,528		
			489		2	83	84	20	1				SPARE
SUB TOTAL (VA)	19,462	19,005	17,829							24,375	25,279	25,862	SUB TOTAL (VA)

TOTAL LOAD PHASE A: 43,837 (VA)
TOTAL LOAD PHASE B: 44,284 (VA)
TOTAL LOAD PHASE C: 43,691 (VA)
TOTAL LOAD: 131,812 (VA) = 366 AMPS

NOTES:
1. PANELBOARD TO BE BOLT-ON TYPE WITH DOOR-IN-DOOR CONSTRUCTION
2. PROVIDE ARC FAULT LABEL PER DETAIL.

PANEL MEA2

TYPE: 225 AMP MAIN LUG | AIC: 65,000 AMPERES | MOUNTED: SURFACE | VOLTAGE: 120/2080 VOLTS, 3 PHASE, 4 WIRE

CIRCUIT DIRECTORY	(VA) PER PHASE			AMP	POLE	CIRCUIT NUMBER		AMP	POLE	(VA) PER PHASE			CIRCUIT DIRECTORY
	PHASE A	PHASE B	PHASE C							PHASE A	PHASE B	PHASE C	
GHP - R34	488			20		1	2	20	1				SPARE
		488			2	3	4	80			7,872		OSA-R1
GHP - R35			488	20		5	6					7,872	
SPARE	488				2	7	8		3	7,872			
				20		9	10	50			2,904		WP - R1
					2	11	12					2,905	
GHP - R17	488			20		13	14		3	2,904			
		488			2	15	16	20			1,000		CEH - R2
SPARE				20		17	18		2			1,000	
	488				2	19	20	20		1,000			CHE - R3
CEH - R4		1,000		20		21	22		2		1,000		
			1,000		2	23	24	20	1				
OSA - R1	7,872			80		25	26	20	1	400			GHP - 32, 30, 28, 34 PUMPS
		7,872				27	28	20	1		300		GHP - 35, 1 PUMPS
			7,872		3	29	30	20	1			500	GHP - 7, 9, 6, 8, 10 PUMPS
SPARE				30		31	32	20	1	500			GHP - 13, 12, 14, 15, 17 PUMPS
					2	33	34	20	1		500		GHP - 16, 3, 18, 20, 19 PUMPS
SPARE				20		35	36	20	1			500	GHP - 21, 22, 23, 24, 25 PUMPS
					2	37	38	20	1	300			GHP - 11, 26, 27 PUMPS
SPARE				20		39	40	20	1		360		GWH - R1,R2,R3,R4
					2	41	42	20	1			200	CP - R1
SPARE				20		43	44	20	1	800			CON - 1R
						45	46	20	1		400		L-1 & L-2
					3	47	48	20	1				SPARE
SPARE				20		49	50	20	1				SPARE
						51	52	20	1				SPARE
					3	53	54						BUSSED SPACE
SPARE				20		55	56						BUSSED SPACE
					2	57	58						BUSSED SPACE
SPARE				20		59	60						BUSSED SPACE
					2	61	62						BUSSED SPACE
BUSSED SPACE						63	64						BUSSED SPACE
BUSSED SPACE						65	66						BUSSED SPACE
BUSSED SPACE						67	68						BUSSED SPACE
BUSSED SPACE						69	70						BUSSED SPACE
BUSSED SPACE						71	72						BUSSED SPACE
BUSSED SPACE						73	74						BUSSED SPACE
BUSSED SPACE						75	76						BUSSED SPACE
BUSSED SPACE						77	78						BUSSED SPACE
BUSSED SPACE						79	80						BUSSED SPACE
BUSSED SPACE						81	82						BUSSED SPACE
BUSSED SPACE						83	84						BUSSED SPACE
SUB TOTAL (VA)	9,824	9,848	9,360							13,776	14,336	12,977	SUB TOTAL (VA)

TOTAL LOAD PHASE A: 23,600 (VA)
TOTAL LOAD PHASE B: 24,184 (VA)
TOTAL LOAD PHASE C: 22,337 (VA)
TOTAL LOAD: 70,121 (VA) = 195 AMPS

NOTES:
1. PANELBOARD TO BE BOLT-ON TYPE WITH DOOR-IN-DOOR CONSTRUCTION
2. PROVIDE ARC FAULT LABEL PER DETAIL.

PANELBOARD NOTES:

1. PANELBOARDS SHALL BE INSTALLED AND ALL CLEARANCES MAINTAINED IN ACCORDANCE WITH THE NEC.
2. ALL PANELBOARDS SHALL BE UL LISTED AND INSTALLED IN ACCORDANCE WITH THAT LISTING.
3. PANELBOARDS SHALL BE FURNISHED COMPLETE WITH THE PROPERLY SIZED ENCLOSURE, INTERNAL HARDWARE, COMPONENTS, SUPPORTING STRUCTURES, ETC., FOR A COMPLETE INSTALLATION.
4. FURNISH EACH PANELBOARD WITH A GROUND BAR BONDED TO THE PANEL ENCLOSURE.
5. THE TERMINATION POINT OF THE FEEDER SERVING EACH ASSEMBLY SHALL BE AT THE NEAREST POINT OF FEEDER ENTRY INTO THE PANEL, SO AS TO MINIMIZE CONDUCTOR FILL IN THE ENCLOSURE. COORDINATE TOP/BOTTOM FEED PANELBOARD PROVISIONS WITH EACH FEEDER INSTALLATION.
6. PROVIDE THE PROPER SIZE AND QUANTITY OF CONDUCTOR TERMINATION POINTS OR LUGS (MULTIPLE LUGS WHEN PARALLEL FEEDERS ARE USED) ON BUSES AND CIRCUIT BREAKERS FOR THE RESPECTIVE SIZE AND NUMBER OF CONDUCTORS INDICATED.
7. ALL FLUSH-MOUNTED PANELBOARDS SHALL BE PROVIDED WITH AT LEAST SIX (6) 3/4" SPARE CONDUITS STUBBED TO ABOVE THE NEAREST ACCESSIBLE CEILING.
8. PANELBOARDS SHALL BE FULLY RATED. SERIES RATED PANELBOARDS WILL NOT BE ACCEPTED.
9. ALL PANELBOARDS SHALL BE CLEARLY MARKED TO COMPLY WITH NEC ARTICLE 110.16 WITH REGARD TO POTENTIAL HAZARDS OF ARC FLASH.
10. ALL PANELBOARDS SHALL BE "DOOR-IN-DOOR" OR "HINGED-FRONT-TRIM" CONSTRUCTION.
11. COMPLY WITH NEC ARTICLE 408.4. PROVIDE A TYPED CIRCUIT DIRECTORY THAT INDICATES WHAT EACH CIRCUIT IS SERVING. FOR LIGHTING AND RECEPTACLE CIRCUITS, INCLUDE THE ROOM NUMBER IN THE CIRCUIT DESCRIPTION ON THE DIRECTORY.
12. EACH PANELBOARD SHALL HAVE A NAMEPLATE AS SHOWN IN DETAIL 1 ON THIS SHEET. ENGINEER WILL NOT PROVIDE FINAL ACCEPTANCE UNTIL THESE NAMEPLATES ARE PROVIDED.
13. MANUFACTURER THAT WILL BE PROVIDING PANELBOARDS ON THIS PROJECT SHALL BE RESPONSIBLE FOR PERFORMING A SHORT CIRCUIT ANALYSIS AND TIME-CURRENT COORDINATION (TCC) STUDY, WHICH DEMONSTRATES THAT THE UPSTREAM OVERCURRENT PROTECTIVE DEVICE NEAREST TO THE FAULT LOCATION WILL OPERATE BEFORE OVERCURRENT PROTECTIVE DEVICES WHICH ARE FURTHER UPSTREAM (I.E. SELECTIVE COORDINATION). INCLUDE COORDINATION STUDY IN THE SHOP DRAWING PACKAGE FOR THE PANELBOARDS FOR REVIEW BY THE ENGINEER OF RECORD.
14. CONTRACTOR SHALL PROVIDE AN ENGRAVED LABEL WITH THE MAXIMUM AVAILABLE FAULT CURRENT AT THE SERVICE ENTRANCE EQUIPMENT,

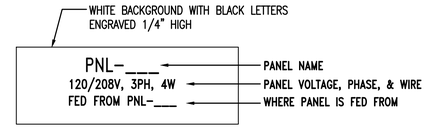

TYPICAL NORMAL POWER NAMEPLATE

1 E5.2 DETAIL - TYPICAL PANELBOARD NAMEPLATE

NO SCALE



NOTES:

1. PROVIDE SELF-ADHESIVE VINYL LABEL TO AFFIX TO ELECTRICAL EQUIPMENT TO WARN OF ARC FLASH HAZARDS.
2. THE LABEL FORMAT AND TEXT SHALL BE IN ACCORDANCE WITH THE FIGURE.
3. THE LABEL SHALL BE LOCATED ON THE EQUIPMENT TO BE CLEARLY VISIBLE TO QUALIFIED PERSONS BEFORE EXAMINATION, ADJUSTMENT, SERVICING, OR MAINTENANCE OF THE EQUIPMENT.
4. THE SIZE OF THE LABEL SHALL BE:

EQUIPMENT TYPE	HEIGHT	WIDTH
INDOOR	4"	6"
OUTDOOR	4"	6"

2 E5.2 ARC FLASH WARNING LABELS

NO SCALE

Gunn & Associates, P.C.
Consulting Engineers
3102 Highway 14
Millbrook, AL 36054
Tel: 334.285.1273
1200 Providence Park, Suite 200
Birmingham, AL 35242
GA#22-071

SS&L ARCHITECTS
Montgomery | Dothan | Auburn | Huntsville | Pensacola
WWW.SSLARCH.COM | 256.285.1063

Rev.	Description	Date

Job Number: 21112
Date: NOVEMBER 1, 2024
Drawn By: KRG, JBG
Checked By: JBG

Project Title:
HUNTSVILLE READINESS CENTER
5180 MOORE'S MILL ROAD
HUNTSVILLE AL, 35811

Sheet Title:
PANELBOARD SCHEDULES, DETAILS & NOTES

Sheet Number:
E5.2

ALABAMA REGISTERED
NO. 20431
PROFESSIONAL
ENGINEER
JOHN BARRY GRAILLEE
11-01-24

PANEL MEB1

TYPE: 400 AMP MAIN LUG | AIC: 65,000 AMPERES | MOUNTED: SURFACE | VOLTAGE: 120/208 VOLTS, 3 PHASE, 4 WIRE

CIRCUIT DIRECTORY	(VA) PER PHASE A	(VA) PER PHASE B	(VA) PER PHASE C	AMP	POLE	CIRCUIT NUMBER		AMP	POLE	(VA) PER PHASE A	(VA) PER PHASE B	(VA) PER PHASE C	CIRCUIT DIRECTORY
GHP - R2	1,956			30		1	2	20		583			
		1,956				3	4		2		583		
			1,956		3	5	6	20				1,040	
GHP - R4	1,040			20		7	8		2	1,040			
		1,040			2	9	10	20	1				SPARE
SPARE				20	1	11	12	20				488	GHP - R47
GHP - R5	1,428			20		13	14		2	488			
		1,428				15	16	20			488		GHP - R48
			1,428		3	17	18		2			488	
GHP - R29	1,238			20		19	20	20		488			GHP R49
		1,238			2	21	22		2		488		
GHP - R33			3,528	50		23	24	20				488	GHP - R50
	3,528					25	26		2	488			
		3,528			3	27	28	20			488		GHP - R51
GHP - R36			488	20		29	30		2			488	
	488				2	31	32	20		488			GHP - R52
GHP - R37		3,528		50		33	34		2		488		
			3,528			35	36	20				488	GHP - R53
	3,528				3	37	38		2	488			
SPARE				30		39	40	20			488		GHP - R54
					2	41	42		2			488	
WP - R2	2,904			50		43	44	20		488			GHP - R55
		2,904				45	46		2		488		
			2,904		3	47	48	40				2,928	GHP - R56
GHP - R38	3,528			50		49	50			2,928			
		3,528				51	52		3		2,928		
			3,528		3	53	54	40				2,928	GHP - R57
GHP - R39	488			20		55	56			2,928			
		488			2	57	58		3		2,928		
GHP - R40			1,848	30		59	60	20				1,175	GHP - R58
	1,848					61	62		2	1,175			
		1,848			3	63	64	20			1,428		GHP - R59
GHP - R41			488	20		65	66					1,428	
	488				2	67	68		3	1,428			
GHP - R42		1,040		20		69	70	20			1,176		GHP - R60
			1,040		2	71	72		2			1,176	
GHP - R43	1,428			20		73	74	30		1,956			GHP - R61
		1,428				75	76				1,956		
			1,428		3	77	78		3			1,956	
GHP - R44	1,428			20		79	80	30		1,956			GHP - R62
		1,428				81	82				1,956		
			1,428		3	83	84		3			1,956	
SUB TOTAL (VA)	25,318	25,382	23,592							16,922	15,883	17,515	SUB TOTAL (VA)

TOTAL LOAD PHASE A: 42,240 (VA)
TOTAL LOAD PHASE B: 41,265 (VA)
TOTAL LOAD PHASE C: 41,107 (VA)
TOTAL LOAD: 124,612 (VA) = 346 AMPS

NOTES:
1. PANELBOARD TO BE BOLT-ON TYPE WITH DOOR-IN-DOOR CONSTRUCTION
2. PROVIDE ARC FAULT LABEL PER DETAIL.

PANEL MEB2

TYPE: 225 AMP MAIN LUG | AIC: 65,000 AMPERES | MOUNTED: SURFACE | VOLTAGE: 120/2080 VOLTS, 3 PHASE, 4 WIRE

CIRCUIT DIRECTORY	(VA) PER PHASE A	(VA) PER PHASE B	(VA) PER PHASE C	AMP	POLE	CIRCUIT NUMBER		AMP	POLE	(VA) PER PHASE A	(VA) PER PHASE B	(VA) PER PHASE C	CIRCUIT DIRECTORY
GHP - R63	1,956			30		1	2	20		1,000			CEH - R5
		1,956				3	4		2		1,000		
			1,956		3	5	6	20				1,000	CEH - R6
GHP - R64	1,956			30		7	8		2	1,000			
		1,956				9	10	20	1		500		GHP - 5, 4, 64, 63, 36 PUMPS
			1,956		3	11	12	20	1			500	GHP - 2, 59, 56, 62, 57 PUMPS
SPARE				30		13	14	20	1				SPARE
						15	16	20	1		500		GHP - 55, 54, 52, 53, 51 PUMPS
					3	17	18	20	1			500	GHP - 58, 50, 49, 47, 48 PUMPS
OSA - R2	7,872			80		19	20	20	1	500			GHP - 46, 44, 29, 61, 60 PUMPS
		7,872				21	22	20	1		500		GHP - 38, 39, 37, 43, 42 PUMPS
			7,872		3	23	24	20	1			400	GHP - 41, 40, 32, 33 PUMPS
SPARE				50		25	26	20	1	270			GWH - R5,R6,R7
						27	28	20	1		200		CP - R2
					3	29	30	20	1			800	CON - 2R
WP - R3	552			20		31	32	50		2,928			WP -R5
		552				33	34				2,928		
			552		3	35	36		3			2,928	
WP - R4	552			20		37	38	50		2,928			WP -R6
		552				39	40				2,928		
			552		3	41	42		3			2,928	
					2	43	44	50		2,928			WP -R1
SPARE				20		45	46				2,928		
					2	47	48		3			2,928	
L-3 & L-4	400			20	1	49	50	50		2,928			WP -R2
SPARE				20	1	51	52				2,928		
SPARE				20	1	53	54		3			2,928	
SPARE				20	1	55	56						BUSSED SPACE
SPARE				20	1	57	58						BUSSED SPACE
SPARE				20	1	59	60						BUSSED SPACE
SPARE				20	1	61	62						BUSSED SPACE
BUSSED SPACE						63	64						BUSSED SPACE
BUSSED SPACE						65	66						BUSSED SPACE
BUSSED SPACE						67	68						BUSSED SPACE
BUSSED SPACE						69	70						BUSSED SPACE
BUSSED SPACE						71	72						BUSSED SPACE
BUSSED SPACE						73	74						BUSSED SPACE
BUSSED SPACE						75	76						BUSSED SPACE
BUSSED SPACE						77	78						BUSSED SPACE
BUSSED SPACE						79	80						BUSSED SPACE
BUSSED SPACE						81	82						BUSSED SPACE
BUSSED SPACE						83	84						BUSSED SPACE
SUB TOTAL (VA)	13,288	12,888	12,888							14,482	14,412	14,912	SUB TOTAL (VA)

TOTAL LOAD PHASE A: 27,770 (VA)
TOTAL LOAD PHASE B: 27,300 (VA)
TOTAL LOAD PHASE C: 27,800 (VA)
TOTAL LOAD: 82,870 (VA) = 230 AMPS

NOTES:
1. PANELBOARD TO BE BOLT-ON TYPE WITH DOOR-IN-DOOR CONSTRUCTION
2. PROVIDE ARC FAULT LABEL PER DETAIL.

PANEL MEC1

TYPE: 225 AMP MAIN LUG | AIC: 65,000 AMPERES | MOUNTED: SURFACE | VOLTAGE: 120/208 VOLTS, 3 PHASE, 4 WIRE

CIRCUIT DIRECTORY	(VA) PER PHASE A	(VA) PER PHASE B	(VA) PER PHASE C	AMP	POLE	CIRCUIT NUMBER		AMP	POLE	(VA) PER PHASE A	(VA) PER PHASE B	(VA) PER PHASE C	CIRCUIT DIRECTORY
CEH - R1	1,000			20		1	2	20		1,100			DF - R1
		1,000			2	3	4				1,100		
			1,000		20	1	5	6	3			1,100	
SPARE				20	1	7	8	20		1,100			DF R2
SPARE				20	1	9	10				1,100		
SPARE				20	1	11	12		3			1,100	
SPARE				20	1	13	14	20					SPARE
SPARE				20	1	15	16						
SPARE				20	1	17	18		3				
SPARE				20	1	19	20	20					SPARE
SPARE				20	1	21	22						
BUSSED SPACE						23	24		3				
BUSSED SPACE						25	26						BUSSED SPACE
BUSSED SPACE						27	28						BUSSED SPACE
BUSSED SPACE						29	30						BUSSED SPACE
BUSSED SPACE						31	32						BUSSED SPACE
BUSSED SPACE						33	34						BUSSED SPACE
BUSSED SPACE						35	36						BUSSED SPACE
BUSSED SPACE						37	38	20	1	1,200			GEN BATTERY CHARGER
BUSSED SPACE						39	40	30			1,000		GEN BLOCK HEATER
BUSSED SPACE						41	42		2			1,000	
SUB TOTAL (VA)	1,000	1,000	0							3,400	3,200	3,200	SUB TOTAL (VA)

TOTAL LOAD PHASE A: 4,400 (VA)
TOTAL LOAD PHASE B: 4,200 (VA)
TOTAL LOAD PHASE C: 3,200 (VA)
TOTAL LOAD: 11,800 (VA) = 33 AMPS

NOTES:
1. PANELBOARD TO BE BOLT-ON TYPE WITH DOOR-IN-DOOR CONSTRUCTION
2. PROVIDE ARC FAULT LABEL PER DETAIL.

PANEL RA1

TYPE: 400 AMP MAIN LUG | AIC: 22,000 AMPERES | MOUNTED: SURFACE | VOLTAGE: 120/208 VOLTS, 3 PHASE, 4 WIRE

CIRCUIT DIRECTORY	(VA) PER PHASE A	(VA) PER PHASE B	(VA) PER PHASE C	AMP	POLE	CIRCUIT NUMBER		AMP	POLE	(VA) PER PHASE A	(VA) PER PHASE B	(VA) PER PHASE C	CIRCUIT DIRECTORY
RECEPTACLES	800			20	1	1	2	20	1	1,600			RECEPTACLES
RECEPTACLES		800		20	1	3	4	20	1		1,600		RECEPTACLES
RECEPTACLES			800	20	1	5	6	20	1			1,600	RECEPTACLES
RECEPTACLES	800			20	1	7	8	20	1	600			RECEPTACLES
RECEPTACLES		600		20	1	9	10	20	1		600		RECEPTACLES
RECEPTACLES			1,200	20	1	11	12	20	1			600	RECEPTACLES
RECEPTACLES	1,200			20	1	13	14	20	1	600			RECEPTACLES
RECEPTACLES		1,200		20	1	15	16	20	1		300		RECEPTACLES
RECEPTACLES			1,200	20	1	17	18	20	1			1,600	RECEPTACLES
RECEPTACLES	1,200			20	1	19	20	20	1	600			RECEPTACLES
RECEPTACLES		2,100		20	1	21	22	20	1		800		RECEPTACLES
RECEPTACLES			1,200	20	1	23	24	20	1			1,000	RECEPTACLES
RECEPTACLES	1,200			20	1	25	26	20	1	900			RECEPTACLES
RECEPTACLES		2,100		20	1	27	28	20	1		600		RECEPTACLES
RECEPTACLES			1,200	20	1	29	30	20	1			800	RECEPTACLES
RECEPTACLES	1,200			20	1	31	32	20	1	1,000			RECEPTACLES
RECEPTACLES		2,100		20	1	33	34	20	1		1,000		RECEPTACLES
RECEPTACLES			1,200	20	1	35	36	20	1			1,000	RECEPTACLES
RECEPTACLES	1,200			20	1	37	38	20	1	1,000			RECEPTACLES
RECEPTACLES		2,100		20	1	39	40	20	1		1,000		RECEPTACLES
RECEPTACLES			1,200	20	1	41	42	20	1			1,000	RECEPTACLES
RECEPTACLES	1,200			20	1	43	44	20	1	1,000			RECEPTACLES
RECEPTACLES		2,100		20	1	45	46	20	1		1,000		RECEPTACLES
RECEPTACLES			1,200	20	1	47	48	20	1			1,000	RECEPTACLES
RECEPTACLES	1,200			20	1	49	50	20	1	1,000			RECEPTACLES
RECEPTACLES		2,100		20	1	51	52	20	1		800		RECEPTACLES
RECEPTACLES			1,200	20	1	53	54	20	1			1,200	APPLIANCE
RECEPTACLES	1,200			20	1	55	56	20	1	1,200			APPLIANCE
RECEPTACLES		2,100		20	1	57	58	20	1		1,200		APPLIANCE
RECEPTACLES			1,000	20	1	59	60	20	1			1,200	APPLIANCE
RECEPTACLES	1,200			20	1	61	62	20	1	300			RECEPTACLES
RECEPTACLES		2,100		20	1	63	64	20	1		900		RECEPTACLES
RECEPTACLES			1,200	20	1	65	66	20	1			600	RECEPTACLES
RECEPTACLES	800			20	1	67	68	20	1	1,000			RECEPTACLES
RECEPTACLES		1,200		20	1	69	70	20	1		1,200		RECEPTACLES
RECEPTACLES			1,000	20	1	71	72	20	1			1,000	RECEPTACLES
RECEPTACLES	1,200			20	1	73	74	20	1	1,000			RECEPTACLES
RECEPTACLES		1,200		20	1	75	76	20	1		1,000		RECEPTACLES
RECEPTACLES			800	20	1	77	78	20	1			1,000	RECEPTACLES
RECEPTACLES	900			20	1	79	80	20	1	1,000			RECEPTACLES
RECEPTACLES		600		20	1	81	82	20	1		1,000		RECEPTACLES
RECEPTACLES			600	20	1	83	84	20	1			900	RECEPTACLES
SUB TOTAL (VA)	15,300	22,400	15,000							12,800	13,000	14,500	SUB TOTAL (VA)

TOTAL LOAD PHASE A: 28,100 (VA)
TOTAL LOAD PHASE B: 35,400 (VA)
TOTAL LOAD PHASE C: 29,500 (VA)
TOTAL LOAD: 93,000 (VA) = 258 AMPS

NOTES:
1. PANELBOARD TO BE BOLT-ON TYPE WITH DOOR-IN-DOOR CONSTRUCTION.
2. PROVIDE ARC FAULT LABEL PER DETAIL.

PANEL RA2

TYPE: 225 AMP MAIN LUG | AIC: 22,000 AMPERES | MOUNTED: SURFACE | VOLTAGE: 120/208 VOLTS, 3 PHASE, 4 WIRE

CIRCUIT DIRECTORY	(VA) PER PHASE A	(VA) PER PHASE B	(VA) PER PHASE C	AMP	POLE	CIRCUIT NUMBER		AMP	POLE	(VA) PER PHASE A	(VA) PER PHASE B	(VA) PER PHASE C	CIRCUIT DIRECTORY
EWC	1,200			20	1	1	2	20	1	1,000			COM ROOM RECEPTACLE
EWC		1,200		20	1	3	4	30	1		2,000		COM ROOM RECEPTACLE
RECEPTACLE			600	20	1	5	6	20	1			1,000	COM ROOM RECEPTACLE
COM ROOM RECEPTACLE	1,000			20	1	7	8	30	1	2,000			COM ROOM RECEPTACLE
COM ROOM RECEPTACLE		2,000		30	1	9	10	20	1		1,000		COM ROOM RECEPTACLE
COM ROOM RECEPTACLE			1,000	20	1	11	12	30	1			2,000	COM ROOM RECEPTACLE
COM ROOM RECEPTACLE	1,000			20	1	13	14	20	1	1,000			COM ROOM RECEPTACLE
COM ROOM RECEPTACLE		2,000		30	1	15	16	30	1		2,000		COM ROOM RECEPTACLE
COM ROOM RECEPTACLE			1,000	20	1	17	18	20	1			1,000	COM ROOM RECEPTACLE
COM ROOM RECEPTACLE	1,000			20	1	19	20	20	1	1,000			COM ROOM RECEPTACLE
COM ROOM RECEPTACLE		1,000		20	1	21	22	20	1				SPARE
COM ROOM RECEPTACLE			2,000	30	1	23	24	20	1				SPARE
COM ROOM RECEPTACLE	1,000			20	1	25	26	20	1				SPARE
COM ROOM RECEPTACLE		2,000		30	1	27	28	20	1				SPARE
COM ROOM RECEPTACLE			2,000	30	1	29	30	20	1				SPARE
COM ROOM RECEPTACLE	1,000			20	1	31	32	20	1				SPARE
COM ROOM RECEPTACLE		1,000		20	1	33	34	20	1				SPARE
COM ROOM RECEPTACLE			2,000	30	1	35	36	20	1				SPARE
COM ROOM RECEPTACLE	1,000			20	1	37	38	20	1				SPARE
COM ROOM RECEPTACLE		2,000		30	1	39	40	20	1				SPARE
COM ROOM RECEPTACLE			1,000	20	1	41	42	20	1				SPARE
SUB TOTAL (VA)	7,200	11,200	9,600							5,000	5,000	4,000	SUB TOTAL (VA)

TOTAL LOAD PHASE A: 12,200 (VA)
TOTAL LOAD PHASE B: 16,200 (VA)
TOTAL LOAD PHASE C: 13,600 (VA)
TOTAL LOAD: 42,000 (VA) = 117 AMPS

NOTES:
1. PANELBOARD TO BE BOLT-ON TYPE WITH DOOR-IN-DOOR CONSTRUCTION.
2. PROVIDE ARC FAULT LABEL PER DETAIL.

PANEL EM

TYPE: 800 AMP MAIN LUG | AIC: 25,000 AMPERES | MOUNTED: SURFACE | VOLTAGE: 120/208 VOLTS, 3 PHASE, 4 WIRE

CIRCUIT DIRECTORY	(VA) PER PHASE A	(VA) PER PHASE B	(VA) PER PHASE C	AMP	POLE	CIRCUIT NUMBER		AMP	POLE	(VA) PER PHASE A	(VA) PER PHASE B	(VA) PER PHASE C	CIRCUIT DIRECTORY
SWITCHBOARD SER				600		1	2	200					PANELBOARD SEU
						3	4						
					3	5	6		3				
SPARE						7	8						
SPARE						9	10						
SPARE						11	12						
SUB TOTAL (VA)	0	0	0							0	0	0	SUB TOTAL (VA)

TOTAL LOAD PHASE A: 0 (VA)
TOTAL LOAD PHASE B: 0 (VA)
TOTAL LOAD PHASE C: 0 (VA)
TOTAL LOAD: 0 (VA) = 0 AMPS

NOTES:
1. PANELBOARD TO BE BOLT-ON TYPE WITH DOOR-IN-DOOR CONSTRUCTION
2. PROVIDE ARC FAULT LABEL PER DETAIL.
3. PROVIDE PANEL WITH NEMA 3R LOCKABLE ENCLOSURE.

PANEL RB1

TYPE: 400 AMP MAIN LUG | AIC: 22,000 AMPERES | MOUNTED: SURFACE | VOLTAGE: 120/208 VOLTS, 3 PHASE, 4 WIRE

CIRCUIT DIRECTORY	(VA) PER PHASE A	(VA) PER PHASE B	(VA) PER PHASE C	AMP	POLE	CIRCUIT NUMBER		AMP	POLE	(VA) PER PHASE A	(VA) PER PHASE B	(VA) PER PHASE C	CIRCUIT DIRECTORY
RECEPTACLES	1,200			20	1	1	2	20	1	1,200			RECEPTACLES
RECEPTACLES		1,200		20	1	3	4	20	1		1,200		RECEPTACLES
RECEPTACLES			900	20	1	5	6	20	1			1,200	RECEPTACLES
RECEPTACLES	750			20	1	7	8	20	1	1,200			RECEPTACLES
RECEPTACLES		800		20	1	9	10	20	1		1,200		RECEPTACLES
RECEPTACLES			1,200	20	1	11	12	20	1			1,200	RECEPTACLES
RECEPTACLES	1,200			20	1	13	14	20	1	900			RECEPTACLES
RECEPTACLES		1,200		20	1	15	16	20	1		1,200		RECEPTACLES
RECEPTACLES			1,200	20	1	17	18	20	1			1,200	RECEPTACLES
RECEPTACLES	1,200			20	1	19	20	20	1	1,200			RECEPTACLES
RECEPTACLES		1,200		20	1	21	22	20	1		1,200		RECEPTACLES
RECEPTACLES			1,200	20	1	23	24	20	1			1,200	RECEPTACLES
RECEPTACLES	1,200			20	1	25	26	20	1	1,200			RECEPTACLES
RECEPTACLES		1,200		20	1	27	28	20	1		1,200		RECEPTACLES
RECEPTACLES			1,200	20	1	29	30	20	1			1,200	RECEPTACLES
RECEPTACLES	1,200			20	1	31	32	20	1	1,200			RECEPTACLES
RECEPTACLES		1,200		20	1	33	34	20	1		1,200		RECEPTACLES
RECEPTACLES			1,200	20	1	35	36	20	1			1,200	RECEPTACLES
RECEPTACLES	1,200			20	1	37	38	20	1	800			RECEPTACLES
RECEPTACLES		1,200		20	1	39	40	20	1		1,000		RECEPTACLES
RECEPTACLES			1,200	20	1	41	42	20	1			600	RECEPTACLES
RECEPTACLES	1,200			20	1	43	44	20	1	1,200			RECEPTACLES
RECEPTACLES		750		20	1	45	46	20	1		1,200		RECEPTACLES
RECEPTACLES			800	20	1	47	48	20	1			300	RECEPTACLES
RECEPTACLES	1,200			20	1	49	50	20	1	400			RECEPTACLES
RECEPTACLES		1,200		20	1	51	52	20	1		400		RECEPTACLES
RECEPTACLES			1,200	20	1	53	54	20	1			200	RECEPTACLES
RECEPTACLES	1,200			20	1	55	56	20	1	1,200			RECEPTACLES
RECEPTACLES		1,200		20	1	57	58	20	1		1,200		RECEPTACLES
RECEPTACLES			600	20	1	59	60	20	1			1,200	RECEPTACLES
RECEPTACLES	1,200			20	1	61	62	20	1	800			RECEPTACLES
RECEPTACLES		1,200		20	1	63	64	20	1		800		RECEPTACLES
RECEPTACLES			1,200	20	1	65	66	20	1			800	RECEPTACLES
RECEPTACLES	1,200			20	1	67	68	20	1	1,200			RECEPTACLES
RECEPTACLES		1,200		20	1	69	70	20	1		1,200		RECEPTACLES
RECEPTACLES			1,200	20	1	71	72	20	1			1,400	RECEPTACLES
RECEPTACLES	1,200			20	1	73	74	20	1	1,400			RECEPTACLES
RECEPTACLES		1,200		20	1	75	76	20	1		1,200		RECEPTACLES
RECEPTACLES			1,200	20	1	77	78	20	1			1,400	RECEPTACLES
RECEPTACLES	1,200			20	1	79	80	20	1	900			RECEPTACLES
RECEPTACLES		1,200		20	1	81	82	20	1		600		RECEPTACLES
RECEPTACLES			1,200	20	1	83	84	20	1			SPARE	
SUB TOTAL (VA)	16,350	15,950	15,500							14,800	14,800	13,100	SUB TOTAL (VA)

TOTAL LOAD PHASE A: 31,150 (VA)
TOTAL LOAD PHASE B: 30,750 (VA)
TOTAL LOAD PHASE C: 28,600 (VA)
TOTAL LOAD: 90,500 (VA) = 251 AMPS

NOTES:
1. PANELBOARD TO BE BOLT-ON TYPE WITH DOOR-IN-DOOR CONSTRUCTION.
2. PROVIDE ARC FAULT LABEL PER DETAIL.

PANEL RB2

TYPE: 225 AMP MAIN LUG | AIC: 22,000 AMPERES | MOUNTED: SURFACE | VOLTAGE: 120/208 VOLTS, 3 PHASE, 4 WIRE

CIRCUIT DIRECTORY	(VA) PER PHASE A	(VA) PER PHASE B	(VA) PER PHASE C	AMP	POLE	CIRCUIT NUMBER		AMP	POLE	(VA) PER PHASE A	(VA) PER PHASE B	(VA) PER PHASE C	CIRCUIT DIRECTORY
EWC	1,200			20	1	1	2						BUSSED SPACE
EWC		1,200		20	1	3	4						BUSSED SPACE
SPARE				20	1	5	6						BUSSED SPACE
SPARE				20	1	7	8						BUSSED SPACE
SPARE				20	1	9	10						BUSSED SPACE
SPARE				20	1	11	12						BUSSED SPACE
SPARE				20	1	13	14						BUSSED SPACE
SPARE				20	1	15	16						BUSSED SPACE
SPARE				20	1	17	18						BUSSED SPACE
SPARE				20	1	19	20						BUSSED SPACE
BUSSED SPACE						21	22						BUSSED SPACE
BUSSED SPACE						23	24						BUSSED SPACE
BUSSED SPACE						25	26						BUSSED SPACE
BUSSED SPACE						27	28						BUSSED SPACE
BUSSED SPACE						29	30						BUSSED SPACE
BUSSED SPACE						31	32						BUSSED SPACE
BUSSED SPACE						33	34						BUSSED SPACE
BUSSED SPACE						35	36						BUSSED SPACE
BUSSED SPACE						37	38						BUSSED SPACE
BUSSED SPACE						39	40						BUSSED SPACE
SPARE						41	42						BUSSED SPACE
SUB TOTAL (VA)	1,200	1,200	0							0	0	0	SUB TOTAL (VA)

TOTAL LOAD PHASE A: 1,200 (VA)
TOTAL LOAD PHASE B: 1,200 (VA)
TOTAL LOAD PHASE C: 0 (VA)
TOTAL LOAD: 2,400 (VA) = 7 AMPS

NOTES:
1. PANELBOARD TO BE BOLT-ON TYPE WITH DOOR-IN-DOOR CONSTRUCTION.
2. PROVIDE ARC FAULT LABEL PER DETAIL.

PANEL RC1

TYPE: 225 AMP MAIN LUG | AIC: 22,000 AMPERES | MOUNTED: SURFACE | VOLTAGE: 120/208 VOLTS, 3 PHASE, 4 WIRE

| CIRCUIT DIRECTORY | (VA) PER PHASE A | (VA) PER PHASE B | (VA) PER PHASE C | AMP | POLE | CIRCUIT NUMBER | | AMP | POLE | (VA) PER PHASE A | (VA) PER PHASE B | (VA) PER PHASE C | CI

PANELBOARD SEU

TYPE: 800 AMP MAIN CIRCUIT BREAKER | AIC: 65,000 AMPERES | MOUNTED: SURFACE | VOLTAGE: 120/208 VOLTS, 3 PHASE, 4 WIRE

CIRCUIT DIRECTORY	(VA) PER PHASE PHASE A	PHASE B	PHASE C	AMP	POLE	CIRCUIT NUMBER		AMP	POLE	(VA) PER PHASE PHASE A	PHASE B	PHASE C	CIRCUIT DIRECTORY
PANEL LPU	4,700			125		1	2	400		26,240			PANEL MUA1
		5,175				3	4				28,318		
			2,555		3	5	6		3			25,270	
PANEL MUA2	8,632			225		7	8	60					TVSS DEVICE (NOTE 2)
		6,232				9	10						
			7,808		3	11	12		3				
SPARE				225		13	14	400		24,400			PANEL RU1
						15	16				26,100		
					3	17	18		3			27,700	
SPARE				125		19	20	225		0			PANEL RU2
						21	22				0		
					3	23	24		3			0	
BUSSED SPACE				225		25	26	125					SPARE
						27	28						
					3	29	30		3				
SUB TOTAL (VA)	13,332	11,407	10,363							50,640	54,418	52,970	SUB TOTAL (VA)

TOTAL LOAD PHASE A: 63,972 (VA)
TOTAL LOAD PHASE B: 65,825 (VA)
TOTAL LOAD PHASE C: 63,333 (VA)
TOTAL LOAD: 193,130 (VA) = 536 AMPS

NOTES:
1. PANEL SHALL BE UL LISTED FOR SERVICE ENTRANCE.
2. PROVIDE WITH INTEGRAL 10 MODE SURGE SUPPRESSION DEVICE, ACTIVE SINE WAVE TRACKING 120,000 AMPS PER MODE.
3. MAIN BREAKER SHALL BE 100% (FULLY) RATED.
4. PROVIDE PANEL WITH NAME PLATE INDICATING AIC RATING.
5. PROVIDE ARC FAULT LABEL PER DETAIL.

PANEL LPU

TYPE: 125 AMP MAIN LUG | AIC: 22,000 AMPERES | MOUNTED: SURFACE | VOLTAGE: 120/208 VOLTS, 3 PHASE, 4 WIRE

CIRCUIT DIRECTORY	(VA) PER PHASE PHASE A	PHASE B	PHASE C	AMP	POLE	CIRCUIT NUMBER		AMP	POLE	(VA) PER PHASE PHASE A	PHASE B	PHASE C	CIRCUIT DIRECTORY
LIGHTING	1,675			20	1	1	2	30					SPARE
LIGHTING		1,675		20	1	3	4		2				
LIGHTING			1,211	20	1	5	6	30					SPARE
LIGHTING	1,565			20	1	7	8		2				
LIGHTING		1,680		20	1	9	10	20	1				SPARE
LIGHTING			1,690	20	1	11	12	20	1				SPARE
LIGHTING	1,400			20	1	13	14	20		1,250			OUTDOOR FLOODS
LIGHTING		1,400		20	1	15	16		2		1,250		
LIGHTING			430	20	1	17	18	20				1,000	OUTDOOR FLOODS
SPARE				20	1	19	20		2	1,000			
SPARE				20	1	21	22	20			1,125		DRIVE LIGHTING
SPARE				20	1	23	24		2			1,125	
SPARE				20	1	25	26	20	1	1,050			BUILDNG MTD LIGHTING
SPARE				20	1	27	28	20	1		400		BAY DOOR FLOODLIGHT
SPARE				20	1	29	30						BUSSED SPACE
SPARE				20	1	31	32						BUSSED SPACE
SPARE				20	1	33	34						BUSSED SPACE
SPARE				20	1	35	36						BUSSED SPACE
SPARE				20	1	37	38						BUSSED SPACE
SPARE				20	1	39	40	20	1		1,000		FACP (NOTE 3)
SPARE				20	1	41	42						BUSSED SPACE
SUB TOTAL (VA)	1,400	1,400	430							3,300	3,775	2,125	SUB TOTAL (VA)

TOTAL LOAD PHASE A: 4,700 (VA)
TOTAL LOAD PHASE B: 5,175 (VA)
TOTAL LOAD PHASE C: 2,555 (VA)
TOTAL LOAD: 12,430 (VA) = 35 AMPS

NOTES:
1. PANELBOARD TO BE BOLT-ON TYPE WITH DOOR-IN-DOOR CONSTRUCTION.
2. PROVIDE ARC FAULT LABEL PER DETAIL.
3. PROVIDE LOCK HANDLE CIRCUIT BREAKER.

PANEL MUA2

TYPE: 225 AMP MAIN LUG | AIC: 22,000 AMPERES | MOUNTED: SURFACE | VOLTAGE: 120/208 VOLTS, 3 PHASE, 4 WIRE

CIRCUIT DIRECTORY	(VA) PER PHASE PHASE A	PHASE B	PHASE C	AMP	POLE	CIRCUIT NUMBER		AMP	POLE	(VA) PER PHASE PHASE A	PHASE B	PHASE C	CIRCUIT DIRECTORY
GHP- G19	488			20		1	2	20	1	1,000			CARBON MONOXIDE CONTROL PANEL
		488			2	3	4						BUSSED SPACE
OWP - 1			2,064	30	1	5	6						BUSSED SPACE
PAD - 1	1,600			20	1	7	8						BUSSED SPACE
PAC - 1		5,544		90		9	10						BUSSED SPACE
			5,544			11	12						BUSSED SPACE
	5,544				3	13	14						BUSSED SPACE
GWH - G1		200		20	1	15	16						BUSSED SPACE
CP - G1			200	20	1	17	18						BUSSED SPACE
SPARE				20	1	19	20						BUSSED SPACE
SPARE				20	1	21	22						BUSSED SPACE
SPARE				30	1	23	24						BUSSED SPACE
SPARE				20	1	25	26						BUSSED SPACE
SPARE				30	1	27	28						BUSSED SPACE
SPARE				30	1	29	30						BUSSED SPACE
SPARE				20	1	31	32						BUSSED SPACE
SPARE				20	1	33	34						BUSSED SPACE
SPARE				30	1	35	36						BUSSED SPACE
SPARE				20	1	37	38						BUSSED SPACE
SPARE				30	1	39	40						BUSSED SPACE
SPARE				20	1	41	42						BUSSED SPACE
SUB TOTAL (VA)	7,632	6,232	7,808							1,000	0	0	SUB TOTAL (VA)

TOTAL LOAD PHASE A: 8,632 (VA)
TOTAL LOAD PHASE B: 6,232 (VA)
TOTAL LOAD PHASE C: 7,808 (VA)
TOTAL LOAD: 22,672 (VA) = 63 AMPS

NOTES:
1. PANELBOARD TO BE BOLT-ON TYPE WITH DOOR-IN-DOOR CONSTRUCTION.
2. PROVIDE ARC FAULT LABEL PER DETAIL.

PANEL MUA1

TYPE: 400 AMP MAIN LUG | AIC: 65,000 AMPERES | MOUNTED: SURFACE | VOLTAGE: 120/208 VOLTS, 3 PHASE, 4 WIRE

CIRCUIT DIRECTORY	(VA) PER PHASE PHASE A	PHASE B	PHASE C	AMP	POLE	CIRCUIT NUMBER		AMP	POLE	(VA) PER PHASE PHASE A	PHASE B	PHASE C	CIRCUIT DIRECTORY
GHP - G1	1,428			20		1	2	20		488			GHP - G20
		1,428			2	3	4		2		488		
			1,428		3	5	6	20				488	GHP- G21
GHP - G2	1,428			20		7	8		2	488			
		1,428				9	10	20	1		1,080		GIR - G4, G5, G6
			1,428		3	11	12	20	1			1,080	GIR - G1, G2, G3
GHP - G3	1,040			20		13	14	20	1	400			GHP - G18, 19, 20, 21
		1,040			2	15	16	20	1				SPARE
GHP - G4			1,040	20		17	18	20	1			500	GHP - 13,14,15,16,17
	1,040				2	19	20	20	1	500			GHP - 8,9,10,11,12
GHP - G5		488		20		21	22	20	1		400		GHP - 2,4,6,7
			488		2	23	24	20	1			300	GHP - 1,3,5
GHP - G6	488			20		25	26	20	1	300			LOUVERS L5 & L6
		488			2	27	28	20	1		600		LOUVERS L1, L2, L3 & L4
GHP - G7			1,428	20		29	30						
	1,428					31	32	20		800			DF - G1
		1,428			3	33	34				800		
GHP - G8			2,904	40		35	36		3			800	
	2,904					37	38	50		2,904			VEF - G1
		2,904			3	39	40				2,904		
SPARE				20	1	41	42		3			2,904	
GHP - G9	488			20		43	44	20		900			EF - G1
		488			2	45	46				900		
GHP - G10			488	20		47	48		3			900	
	488				2	49	50	20		552			EF - G2
GHP - G11		488		20		51	52				552		
			488		2	53	54		3			552	
GHP - G12	488			20		55	56	20		552			EF - G3
		488			2	57	58				552		
GHP G13			2,904	40		59	60		3			552	
	2,904					61	62	30		1,664			DACO - 1
		2,904			3	63	64		2		1,664		
GHP - G14			488	20		65	66	20				104	DACI - 1
	488				2	67	68		2	104			
GHP G15		488		20		69	70	20			1,250		CEH - G1
			488		2	71	72		2			1,250	
GHP - G16	488			20		73	74	20		1,000			WEH - G1
		488			2	75	76		2		1,000		
GHP - G17			488	20		77	78	20	1			200	GUH - G1
	488				2	79	80	20	1				SPARE
GHP- G18		1,040		20		81	82	20	1		540		PDH - G1
			1,040		2	83	84	20	1			540	PDH - G2
SUB TOTAL (VA)	15,588	15,588	15,100							10,652	12,730	10,170	SUB TOTAL (VA)

TOTAL LOAD PHASE A: 26,240 (VA)
TOTAL LOAD PHASE B: 28,318 (VA)
TOTAL LOAD PHASE C: 25,270 (VA)
TOTAL LOAD: 79,828 (VA) = 222 AMPS

NOTES:
1. PANELBOARD TO BE BOLT-ON TYPE WITH DOOR-IN-DOOR CONSTRUCTION
2. PROVIDE ARC FAULT LABEL PER DETAIL.

PANEL RU1

TYPE: 400 AMP MAIN LUG | AIC: 22,000 AMPERES | MOUNTED: SURFACE | VOLTAGE: 120/208 VOLTS, 3 PHASE, 4 WIRE

CIRCUIT DIRECTORY	(VA) PER PHASE PHASE A	PHASE B	PHASE C	AMP	POLE	CIRCUIT NUMBER		AMP	POLE	(VA) PER PHASE PHASE A	PHASE B	PHASE C	CIRCUIT DIRECTORY
RECEPTACLES	600			20	1	1	2	20	1	1,200			PARTITIONED FURNITURE
RECEPTACLES		600		20	1	3	4	20	1		1,200		PARTITIONED FURNITURE
RECEPTACLES			600	20	1	5	6	20	1			1,200	PARTITIONED FURNITURE
RECEPTACLES	600			20	1	7	8	20	1	1,200			PARTITIONED FURNITURE
RECEPTACLES		600		20	1	9	10	20	1		1,200		PARTITIONED FURNITURE
RECEPTACLES			300	20	1	11	12	20	1			1,200	PARTITIONED FURNITURE
RECEPTACLES	300			20	1	13	14	20	1	1,200			RECEPTACLES
RECEPTACLES		600		20	1	15	16	20	1		1,200		RECEPTACLES
RECEPTACLES			600	20	1	17	18	20	1			1,200	RECEPTACLES
RECEPTACLES	600			20	1	19	20	20	1	1,200			RECEPTACLES
RECEPTACLES		900		20	1	21	22	20	1		1,200		RECEPTACLES
RECEPTACLES			600	20	1	23	24	20	1			1,200	RECEPTACLES
RECEPTACLES	900			20	1	25	26	20	1	1,200			RECEPTACLES
RECEPTACLES		1,000		20	1	27	28	20	1		1,200		RECEPTACLES
RECEPTACLES			1,200	20	1	29	30	20	1			900	RECEPTACLES
RECEPTACLES	600			20	1	31	32	20	1	1,200			PARTITIONED FURNITURE
RECEPTACLES		800		20	1	33	34	20	1		1,200		PARTITIONED FURNITURE
RECEPTACLES			1,200	20	1	35	36	20	1			1,200	PARTITIONED FURNITURE
RECEPTACLES	900			20	1	37	38	20	1	1,200			PARTITIONED FURNITURE
RECEPTACLES		900		20	1	39	40	20	1		1,200		PARTITIONED FURNITURE
RECEPTACLES			1,200	20	1	41	42	20	1			1,200	PARTITIONED FURNITURE
RECEPTACLES	800			20	1	43	44	20	1	600			RECEPTACLES
RECEPTACLES		900		20	1	45	46	20	1		1,000		RECEPTACLES
RECEPTACLES			1,200	20	1	47	48	20	1			600	RECEPTACLES
RECEPTACLES	1,000			20	1	49	50	20	1	600			RECEPTACLES
RECEPTACLES		900		20	1	51	52	20	1		600		RECEPTACLES
RECEPTACLES			1,500	20	1	53	54	20	1			600	APPLIANCE
RESTROOM	1,000			20	1	55	56	20	1	600			APPLIANCE
EWC		1,200		20	1	57	58	20	1		1,200		APPLIANCE
EWC			1,200	20	1	59	60	20	1			900	APPLIANCE
RESTROOM	1,000			20	1	61	62	20	1	900			RECEPTACLES
RECEPTACLES		900		20	1	63	64	20	1		900		RECEPTACLES
COM OUTLET			1,200	20	1	65	66	20	1			900	RECEPTACLES
COM OUTLET	2,000			30	1	67	68	20	1	900			RECEPTACLES
COM OUTLET		1,200		20	1	69	70	20	1		300		RECEPTACLES
COM OUTLET			2,000	30	1	71	72	20	1			1,200	RECEPTACLES
COM OUTLET	1,200			20	1	73	74	20	1	600			RECEPTACLES
COM OUTLET		1,200		20	1	75	76	20	1		600		RECEPTACLES
COM OUTLET			1,200	20	1	77	78	20	1				SPARE
RECEPTACLES	300			20	1	79	80	20	1				SPARE
RECEPTACLES		600		20	1	81	82	20	1		800		POL RECEPTACLES
RECEPTACLES			900	20	1	83	84	20	1			500	LCPU (NOTE 3)
SUB TOTAL (VA)	11,800	12,300	14,900							12,600	13,800	12,800	SUB TOTAL (VA)

TOTAL LOAD PHASE A: 24,400 (VA)
TOTAL LOAD PHASE B: 26,100 (VA)
TOTAL LOAD PHASE C: 27,700 (VA)
TOTAL LOAD: 78,200 (VA) = 217 AMPS

NOTES:
1. PANELBOARD TO BE BOLT-ON TYPE WITH DOOR-IN-DOOR CONSTRUCTION.
2. PROVIDE ARC FAULT LABEL PER DETAIL.
3. PROVIDE WITH LOCK HANDLE CIRCUIT BREAKER

Gunn & Associates, P.C.
Consulting Engineers
3102 Highway 14
Millbrook, AL 36054
Tel: 334.285.1273
1200 Providence Park, Suite 200
Birmingham, AL 35242
GA#22-071

S|S&L ARCHITECTS
Montgomery | Dothan | Auburn | Huntsville | Pensacola
WWW.SSLARCH.COM | 256.285.1063

Rev.	Description	Date

Job Number: 21112
Date: NOVEMBER 1, 2024
Drawn By: KRG, JBG
Checked By: JBG

Project Title:
HUNTSVILLE READINESS CENTER
5180 MOORE'S MILL ROAD
HUNTSVILLE AL, 35811

Sheet Title:
PANELBOARD SCHEDULES

Sheet Number:
E5.4

ALABAMA REGISTERED NO. 20431 PROFESSIONAL ENGINEER JOHN BARRY GRAVLEE
11-01-24

PANEL RU2

TYPE: 225 AMP MAIN LUG			AIC: 22,000 AMPERES			MOUNTED: SURFACE			VOLTAGE: 120/208 VOLTS, 3 PHASE, 4 WIRE			
CIRCUIT DIRECTORY	(VA) PER PHASE			AMP	POLE	CIRCUIT NUMBER		AMP	POLE	(VA) PER PHASE			CIRCUIT DIRECTORY
	PHASE A	PHASE B	PHASE C							PHASE A	PHASE B	PHASE C	
SPARE		=====	=====	20	1	1	2				=====	=====	BUSSED SPACE
SPARE	=====		=====	20	1	3	4			=====		=====	BUSSED SPACE
SPARE	=====	=====		20	1	5	6			=====	=====		BUSSED SPACE
SPARE		=====	=====	20	1	7	8				=====	=====	BUSSED SPACE
SPARE	=====		=====	30	1	9	10			=====		=====	BUSSED SPACE
SPARE	=====	=====		20	1	11	12			=====	=====		BUSSED SPACE
SPARE		=====	=====	20	1	13	14				=====	=====	BUSSED SPACE
SPARE	=====		=====	30	1	15	16			=====		=====	BUSSED SPACE
SPARE	=====	=====		20	1	17	18			=====	=====		BUSSED SPACE
SPARE		=====	=====	20	1	19	20				=====	=====	BUSSED SPACE
SPARE	=====		=====	20	1	21	22			=====		=====	BUSSED SPACE
SPARE	=====	=====		30	1	23	24			=====	=====		BUSSED SPACE
SPARE		=====	=====	20	1	25	26				=====	=====	BUSSED SPACE
SPARE	=====		=====	30	1	27	28			=====		=====	BUSSED SPACE
SPARE	=====	=====		30	1	29	30			=====	=====		BUSSED SPACE
SPARE		=====	=====	20	1	31	32				=====	=====	BUSSED SPACE
SPARE	=====		=====	20	1	33	34			=====		=====	BUSSED SPACE
SPARE	=====	=====		30	1	35	36			=====	=====		BUSSED SPACE
SPARE		=====	=====	20	1	37	38				=====	=====	BUSSED SPACE
SPARE	=====		=====	30	1	39	40			=====		=====	BUSSED SPACE
SPARE	=====	=====		20	1	41	42			=====	=====		BUSSED SPACE
SUB TOTAL (VA)	0	0	0							0	0	0	SUB TOTAL (VA)

TOTAL LOAD PHASE A: 0 (VA)
TOTAL LOAD PHASE B: 0 (VA)
TOTAL LOAD PHASE C: 0 (VA)
TOTAL LOAD: 0 (VA) = 0 AMPS

NOTES:
1. PANELBOARD TO BE BOLT-ON TYPE WITH DOOR-IN-DOOR CONSTRUCTION.
2. PROVIDE ARC FAULT LABEL PER DETAIL.

Gunn & Associates, P.C.
Consulting Engineers
3102 Highway 14
Millbrook, AL 36054
Tel: 334.285.1273
1200 Providence Park, Suite 200
Birmingham, AL 35242
GA#22-071

SS&L ARCHITECTS
Montgomery | Dothan | Auburn | Huntsville | Pensacola
WWW.SSLARCH.COM | 256.285.1063

Rev.	Description	Date

Job Number: 21112
Date: NOVEMBER 1, 2024
Drawn By: KRG, JBG
Checked By: JBG

Project Title:
HUNTSVILLE READINESS CENTER
5180 MOORE'S MILL ROAD
HUNTSVILLE AL, 35811

Sheet Title:
PANELBOARD SCHEDULES

Sheet Number:
E5.5

ALABAMA REGISTERED
NO. 20431
PROFESSIONAL
11-01-24
ENGINEER
JOHN BARRY GRAILEE

FIRE ALARM/ MASS NOTIFICATION SYSTEM NOTES:

1. THE FIRE ALARM AND MASS NOTIFICATION SHALL BE COMBINED IN ONE MASTER CONTROL PANEL. THE MASTER CONTROL PANEL SHALL HAVE FEATURES OF A FIRE ALARM AND MASS NOTIFICATION CONTROL UNIT WHERE FIRE AND MASS NOTIFICATION CONTROL UNITS ARE INTERCONNECTED. THE PANEL HAS CENTRAL PROCESSING, MEMORY, AND INPUT/OUTPUT TERMINALS.
2. INSTALLATION SHALL COMPLY WITH THE ADA, NEC, NFPA, UL, AND UFC 4-021-01.
3. ALL SYSTEM COMPONENTS, ENCLOSURES, FRAMES, SURGE ARRESTORS, ETC., SHALL BE GROUNDED.
4. THE FACP/MNS WIRING SYSTEM SHALL BE FURNISHED AND INSTALLED IN ACCORDANCE WITH THE MANUFACTURER'S REQUIREMENTS FOR CLASS "A" SYSTEM AND AS FOLLOWS:
   PRIMARY POWER – 120V AC
   NOTIFICATION APPLIANCE CIRCUITS (NAC) – 24V DC
   SIGNALING LINE CIRCUIT (SLC) – 24V DC
5. ALL CLASS 'A' CIRCUITS SHALL BE INSTALLED SUCH THAT THE OUTGOING AND RETURN CONDUCTORS, EXITING FROM AND RETURNING TO THE CONTROL UNIT RESPECTIVELY, ARE ROUTED SEPARATELY AND NOT RUN IN THE SAME CABLE OR RACEWAY.
6. ALL EQUIPMENT AND DEVICES SHALL BE INSTALLED IN ACCORDANCE WITH THE MANUFACTURER'S INSTRUCTIONS, APPLICABLE STANDARDS AND ACCESSIBLE FOR VISUAL INSPECTION AND MAINTENANCE. WIRING DIAGRAMS SHALL BE SECURED FROM THE SYSTEM MANUFACTURER AND INSTALLED ACCORDINGLY TO MEET THE SPECIFIED TYPES.
7. A "CERTIFICATE OF COMPLETION" IN ACCORDANCE WITH NFPA 72 SHALL BE FURNISHED PRIOR TO FINAL ACCEPTANCE.
8. CONTRACTOR IS RESPONSIBLE FOR VERIFYING AND PROVIDING ALL FACP/MNS DEVICE QUANTITIES FROM AUXILIARY DRAWINGS. DO NOT USE THIS RISER FOR DEVICE COUNTS.
9. PROVIDE ADDITIONAL NOTIFICATION APPLIANCE CIRCUIT PANELS, POWER SUPPLIES, ETC. FOR FUTURE CAPACITY TO HAVE SYSTEM WORK CORRECTLY AS ONE SYSTEM.
10. PROVIDE MONACO TRANSCEIVER AND ANTENNA. PROVIDE ALL ASSOCIATED MOUNTING BRACKETS, COAX. ETC.
11. PROVIDE EMERGENCY BATTERIES CAPABLE OF RUNNING THE COMPLETE FACP/MNS SYSTEM IN ALARM MODE, PER NFPA GUIDELINES AT A MINUMUM. BATTERIES SHALL BE SIZED TO HANDLE THE FUTURE CAPACITY.
12. FACP/MNS SYSTEM SHALL REPORT TO THE LOCAL FIRE DEPARTMENT. CONTRACTOR IS RESPONSIBLE FOR COORDINATING WITH FIRE DEPARTMENT AND PROVIDING NOTIFICATION ACCORDING TO THE LOCAL FIRE DEPARTMENT SPECIFICATIONS.
13. ALL WIRING TO BE IN CONDUIT SIZED IN ACCORDANCE WITH NEC WITH A MINIMUM SIZE OF 3/4". PROVIDE ALL CONDUIT WITH 3" WIDE RED STRIPE EVERY 10' FOR LENGTH OF RUN.
14. PROVIDE ALL JUNCTION BOXES WITH RED COVER, STENCIL THE LETTERS "FA" IN 2" HIGH LETTERS ON EACH BOX COVER.
15. FACP/MNS SYSTEM PROVIDER IS RESPONSIBLE FOR PROVIDING SIGNAL LINE BOOSTERS AS REQUIRED FOR SYSTEM TO FUNCTION PROPERLY.

FIRE ALARM & MASS NOTIFICATION RECORDED MESSAGES

1. (TONE USED FOR FIRE), "MAY I HAVE YOUR ATTENTION PLEASE?! A EMERGENCY HAS BEEN REPORTED IN THE BUILDING. WHILE THIS IS BEING VERIFIED, PLEASE LEAVE THE BUILDING BY THE NEAREST EXIT."
2. (CHIME) "TORNADO IN THE AREA. SEEK COVER IMMEDIATELY"
3. (CHIME) "THERE IS AN INTRUDER ON POST. STAY INSIDE AND SECURE ALL DOORS."
4. (CHIME) "BOMB THREAT ISSUED FOR THIS FACILITY. REMAIN CALM. EXIT THE BUILDING. AVOID THE MAIN ENTRANCE."
5. (CHIME) "THERE IS AN ACTIVE SHOOTER ON POST. STAY INSIDE. CLOSE DOORS AND WINDOWS."
6. (CHIME) "POSSIBLE CONTAMINATION IN THE VICINITY. STAY INSIDE. CLOSE DOORS AND WINDOWS."
7. (CHIME) "ALL CLEAR. RESUME NORMAL ACTIVITIES."
8. (CHIME) "THIS IS A TEST OF THE NOTIFICATION SYSTEM. CONTINUE NORMAL ACTIVITIES. THIS IS ONLY A TEST."

MESSAGE NOTES:

1. CONTRACTOR SHALL FURNISH AND HAVE INSTALLED A MESSAGE KIT FOR FIRE ALARM & MNS WITH MESSAGES SHOWN IN TABLE ABOVE.
2. MESSAGES #1-#6 SHALL BE IN MALE VOICE AND #7 & #8 SHALL BE FEMALE VOICE.
3. MESSAGE #1 SHALL HAVE FIRE ALARM PRE TONE AND AFTER TONE. MESSAGES #2-#8 SHALL HAVE CHIMES FOR PRE TONE AND AFTER TONES.

FIRE ALARM MOUNTING HEIGHTS/INSTRUCTIONS NOTES:

1. MOUNT FIRE ALARM ENCLOSURE WITH THE TOP OF THE CABINET 72" ABOVE THE FINISHED FLOOR OR CENTER THE CABINET AT 63", WHICHEVER IS LOWER.
2. MOUNT LOC WITH THE TOP OF THE PANEL 72" ABOVE THE FINISHED FLOOR OR CENTER OF THE PANEL AT 63", WHICHEVER IS LOWER. FLUSH MOUNT ANNUNCIATOR UNLESS OTHERWISE NOTED.
3. REMOTE POWER SUPPLIES AND AUXILIARY FIRE ALARM PANELS. LOCATE THE PANEL OR CABINET WITH THE TOP OF THE PANEL 72" ABOVE THE FINISHED FLOOR OR CENTER THE PANEL AT 63", WHICHEVER IS LOWER. DO NOT LOCATE THESE PANELS ABOVE CEILINGS OR WHERE INACCESSIBLE BY A PERSON STANDING ON THE FINISHED FLOOR OF THE SPACE.
4. MOUNT STATIONS SO THAT THEIR OPERATING HANDLES ARE BETWEEN 42" AND 48" ABOVE THE FINISHED FLOOR. DO NOT USE BRICK OR BLOCK COURSES AS YOUR ONLY GUIDE. CUT BRICK OR BLOCK TO ACHIEVE PROPER HANDLE HEIGHT.
5. ALL WALL MOUNTED AUDIO/VISUAL DEVICES SHALL BE MOUNTED SO THE ENTIRE LENS IS BETWEEN 80" AND 96" ABOVE THE FINISHED FLOOR. WHERE LOW CEILING HEIGHTS DO NOT PERMIT MOUNTING AT A MINIMUM OF 80" AFF, VISIBLE APPLIANCES SHALL BE MOUNTED WITHIN 6" OF THE CEILING. DO NOT USE BRICK OR BLOCK COURSES AS YOUR ONLY GUIDE. CUT BRICK OR BLOCK TO ACHIEVE PROPER LENS HEIGHT.
6. WEATHER PROOF APPLIANCES INSTALLED OUTDOORS SHALL BE UL LISTED FOR OUTDOOR USE. MOUNT SO THE ENTIRE LENS IS BETWEEN 80" AND 96" ABOVE FINISHED FLOOR. FOR WEATHERPROOF APPLIANCES MOUNTED AT FIRE DEPARTMENT CONNECTION (FDC), COORDINATE WITH LOCAL AUTHORITY HAVING JURISDICTION PRIOR TO ROUGH-IN FOR MOUNTING HEIGHT.
7. SMOKE AND HEAT DETECTOR HEADS SHALL NOT BE INSTALLED UNTIL AFTER CONSTRUCTION CLEAN-UP IS COMPLETED. IF DETECTOR HEADS ARE INSTALLED PRIOR TO CONSTRUCTION CLEAN-UP, PROTECTIVE COVERS MUST BE IN PLACE TO PROTECT DETECTOR HEADS FROM PARTICULATE DAMAGE. DETECTORS LOCATED ON THE WALL SHALL HAVE THE TOP OF THE DETECTOR AT LEAST 4" AND NOT MORE THAN 12" BELOW THE CEILING. INSTALL SMOKE DETECTORS NO CLOSER THAN 3 FEET FROM AIR HANDLING SUPPLY AIR DIFFUSERS OR RETURN AIR OPENINGS. LOCATE DETECTORS NO CLOSER THAN 12" FROM ANY PART OF A LIGHTING FIXTURE.
8. DUCT SMOKE DETECTOR HEADS SHALL NOT BE INSTALLED UNTIL AFTER CONSTRUCTION CLEAN-UP IS COMPLETED. DETECTOR HEADS INSTALLED PRIOR TO CONSTRUCTION CLEAN-UP SHALL BE REPLACED. DUCT DETECTORS ARE TO BE PROVIDED BY THE FIRE ALARM CONTRACTOR AND INSTALLED BY THE MECHANICAL CONTRACTOR.
9. ADDRESSABLE MODULES SHALL BE INSTALLED LESS THAN 3-FEET FROM THE DEVICE BEING CONTROLLED OR MONITORED. ORIENT THE DEVICE MOUNTING FOR BEST MAINTENANCE ACCESS. LABEL ALL ADDRESSABLE MODULES AS TO THEIR FUNCTION.

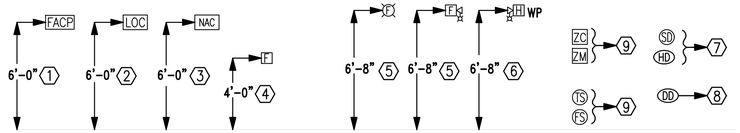

2 / E6.1 STANDARD MOUNTING HEIGHTS/INSTRUCTIONS
NOT TO SCALE

SHEET NOTES

1. PROVIDE TVSS PROTECTION ON POWER FEED TO FIRE ALARM CONTROL PANEL.
2. PROVIDE TWO CAT 6 CABLES TO TBB FOR MONITORING.
3. PROVIDE 1-1/2" CONDUIT WITH ONE 6 STRAND OM2 FIBER OPTIC CABLE TO FACILITATE NETWORK CONNECTION BETWEEN READINESS CENTER AND UNIT STORAGE BUILDING. TEST FO CABLE AND PROVIDE CONNNECTORS ON BOTH ENDS.

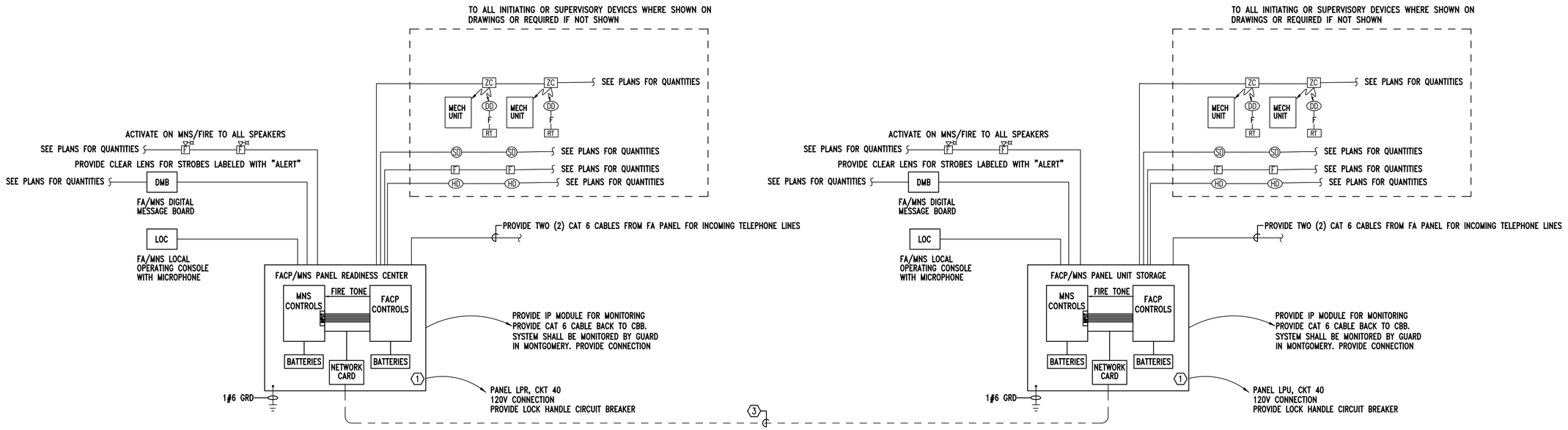

1 / E6.1 FIRE ALARM /MASS NOTIFICATION RISER DIAGRAM READINESS CENTER & UNIT STORAGE
NO SCALE

Gunn & Associates, P.C.
Consulting Engineers
3102 Highway 14
Millbrook, AL 36054
Tel: 334.285.1273
1200 Providence Park, Suite 200
Birmingham, AL 35242
GA#22-071

SS&L ARCHITECTS
Montgomery | Dothan | Auburn | Huntsville | Pensacola
WWW.SSLARCH.COM | 256.285.1063

Rev.	Description	Date

Job Number 21112
Date NOVEMBER 1, 2024
Drawn By KRG, JBG
Checked By JBG

Project Title
HUNTSVILLE READINESS CENTER
5180 MOORE'S MILL ROAD
HUNTSVILLE AL, 35811

Sheet Title
FIRE ALARM RISER DIAGRAM, DETAILS & NOTES

Sheet Number
E6.1

ALABAMA REGISTERED NO. 20431 PROFESSIONAL ENGINEER JOHN BARRY GRAVLEE
11-01-24

SECURITY RACEWAYS AND POWER

1. ELECTRICAL CONTRACTOR SHALL COORDINATE WITH SECURITY CONTRACTOR PRIOR TO BIDS TO CONFIRM ALL RACEWAYS AND 120V CONNECTIONS REQUIRED BY THE SECURITY CONTRACTOR FOR COMPLETE INSTALLTION AND OPERABLE SYSTEM AND PROVIDE IN THE BASE BID.

ACCESS CONTROL NOTES:

1. RACEWAYS, BACK BOXES AND JUNCTION BOXES SHALL BE CONCEALED IN WALLS OR CEILING TO GREATEST EXTENT POSSIBLE.
2. DOOR DETAILS INDICATE RELATIVE LOCATION OF COMPONENTS LOCATIONS. FINAL LOCATON SHALL BE DETERMINED IN THE FIELD IN COORDINATION WITH OWNER REQUIREMENTS.
3. ALL ELECTRONIC AND SECURITY DEVICES ARE TO BE PROVIDED AND INSTALLED BY AN ESS CERTIFIED SECURITY CONTRACTOR. THE ELECTRICAL CONTRACTOR IS RESPONSIBLE FOR PROVIDING ALL CONDUITS AND JUNCTION BOXES REQUIRED TO FACILITATE THE INSTALLATION OF THE ACCESS CONTROL PACKAGE. THE ELECTRICAL CONTRACTOR IS TO COORDINATE WITH THESE CONTRACTORS TO INSURE THAT ALL DEVICES ARE LOCATED CORRECTLY PRIOR TO INSTALLATION OF RACEWAYS, JUNCTION BOXES, AND POWER.

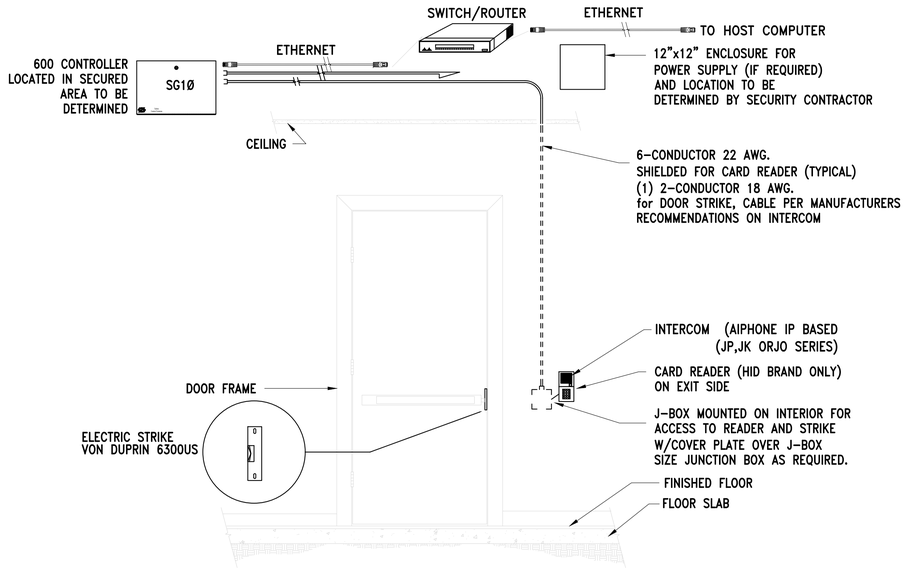

1 E6.2 TYPICAL ELECTRIC STRIKE CARD READER/INTERCOM SECURED VIEW DOOR DETAIL
NO SCALE

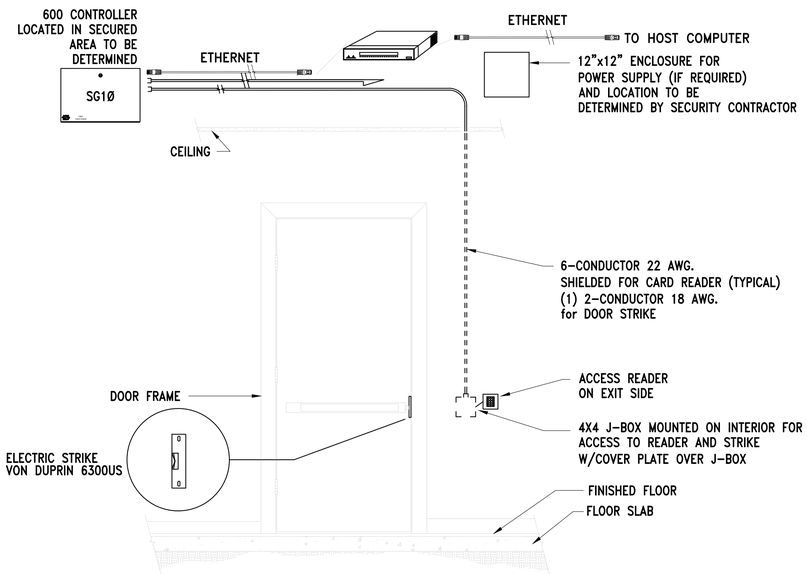

2 E6.2 TYPICAL ELECTRIC STRIKE CARD READER SECURED VIEW DOOR DETAIL
NO SCALE

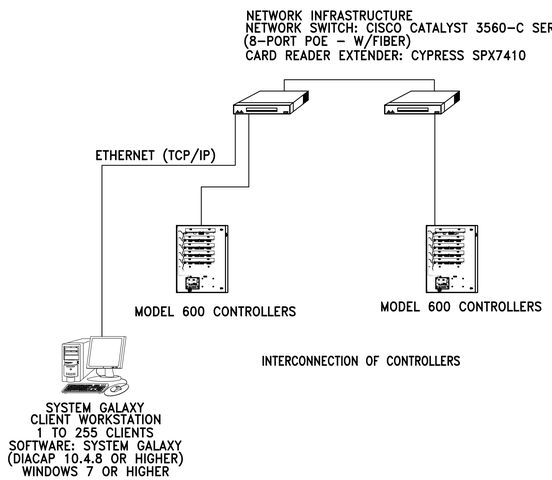

3 E6.2 TYPICAL CONNECTIONS OF MULTIPLE CONTROLS
NO SCALE

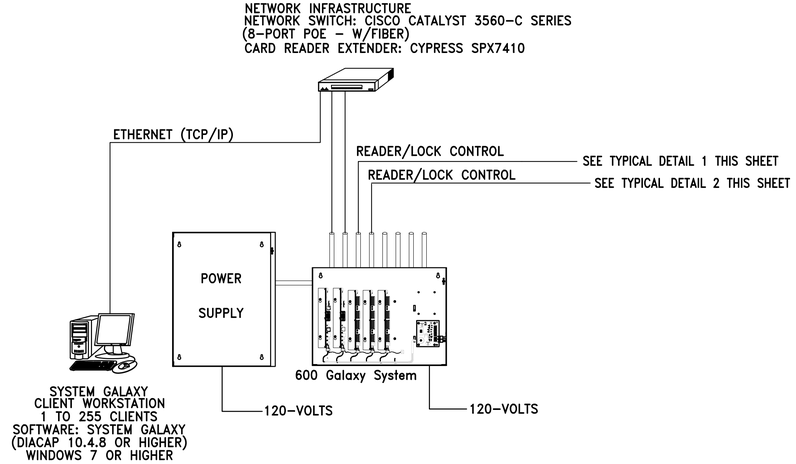

4 E6.2 TYPICAL ACCESS CONTROL LAYOUT
NO SCALE

SS&L ARCHITECTS
Montgomery | Dothan | Auburn | Huntsville | Pensacola
WWW.SSLARCH.COM | 256.285.1063

Rev.	Description	Date

Job Number 21112
Date NOVEMBER 1, 2024
Drawn By KRG, JBG
Checked By JBG

Project Title
HUNTSVILLE READINESS CENTER
5180 MOORE'S MILL ROAD
HUNTSVILLE AL, 35811

Sheet Title
DOOR SECURITY DETAILS & NOTES

Sheet Number
E6.2

Gunn & Associates, P.C.
Consulting Engineers
3102 Highway 14, Millbrook, AL 36054, Tel: 334.285.1273
1200 Providence Park, Suite 200, Birmingham, AL 35242
GA#22-071

ALABAMA REGISTERED NO. 20431 PROFESSIONAL 11-01-24 ENGINEER JOHN BARRY GRAILEE

SINGLE LINE DIAGRAM NOTES:

1. INSTALLATION AND CONNECTION OF ALL DEVICES SHALL BE IN ACCORDANCE WITH NEC, MANUFACTURER'S RECOMMENDATIONS, AND STATE AND LOCAL CODES.
2. CONTRACTOR IS RESPONSIBLE FOR THE CONNECTING, INSTALLATION, AND MARKING OF ALL POWER FEEDER CONDUCTORS FOR THE PROPER PHASE SEQUENCE AND LOADING . CONTRACTOR SHALL TEST EACH FEEDER AND EQUIPMENT FEEDERS WITH A PHASE METER PRIOR TO CONNECTING LOADS.
3. THE CONTRACTOR IS RESPONSIBLE FOR COORDINATING AND VERIFYING WITH ALL DIVISIONS THE ACTUAL NAMEPLATE DATA OF ALL EQUIPMENT AND DEVICES SUPPLIED ON THIS PROJECT PRIOR TO BID. CONTRACTOR SHALL THEN PROVIDE THE PROPERLY SIZED OVERCURRENT DEVICES (CIRCUIT BREAKERS, CONDUCTORS, DISCONNECTS, FUSES, ETC.) TO PROPERLY PROTECT THE EQUIPMENT PER THE NEC. ENGINEER'S DESIGN BASED ON DATA GIVEN TO HIM BY DESIGNERS OF OTHER DIVISIONS, ACTUAL NAMEPLATE DATA COULD DIFFER.
4. SEAL ALL CONDUITS FROM THE EXTERIOR WITH A SEALING COMPOUND, ONCE ALL CABLING HAS BEEN INSTALLED.
5. PROVIDE 4" CONCRETE HOUSEKEEPING PAD WITH 1" CHAMFER FOR ALL FLOOR MOUNTED TRANSFORMERS AND SWITCHBOARDS.
6. COORDINATE WITH GROUNDING DETAILS ON SHEET E7.2 FOR ALL THE DIFFERENT TYPE GROUNDING REQUIREMENTS.
7. ALL UNDERGROUND SECONDARY FEEDERS SHALL BE A MINIMUM OF 36" BELOW GRADE TO THE TOP OF THE DUCT BANK.
8. ALL UNDERGROUND PRIMARY FEEDERS SHALL BE A MINIMUM OF 48" BELOW GRADE TO THE TOP OF THE CONDUIT.

NOTES:

1. CONTRACTOR SHALL CALCULATE AND PROVIDE NAMEPLATE ON THE SERVICE ENTRANCE EQUIPMENT THAT INDICATES THE MAXIMUM AVAILABLE FAULT CURRENT AND THE DATE THE CALCUALTION WAS PERFORMED. SEE NAMEPLATE REQUIREMENTS BELOW.

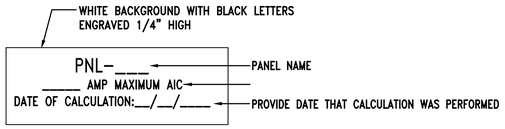

TYPICAL SERVICE ENTRANCE FAULT CURRENT NAMEPLATE

3 / E7.1 DETAIL - SERVICE ENTRANCE FAULT CURRENT NAMEPLATE

NO SCALE

SHEET NOTES:

1. FEEDER CIRCUIT SHALL BE INSTALLED UNDERGROUND BELOW SLAB.
2. INSTALL CONCRETE PAD FOR PADMOUNT TRANSFORMER AS DIRECTED BY UTILITY COMPANY.
3. INSTALL UNDERGROUND PRIMARY CONDUITS FROM THE PADMOUNT TRANSFORMER TO THE UTILITY DIP POLE AS DIRECTED BY UTILITY COMPANY.
4. INSTALL A MINIMUM 1-1/4" CONDUIT FROM THE SECONDARY CONNECTION COMPARTMENT OF THE PADMOUNT TRANSFORMER TO THE METER BASE. VERIFY THE EXACT CONDUIT SIZE, TERMINATION POINTS, AND ROUTING WITH APCO PRIOR TO ROUGH-IN. MOUNT METER BESIDE TRANSFORMER. PROVIDE UNISTRUT SET IN CONCRETE FOR MOUNTING OF METER.
5. SEE PANELBOARD SCHEDULE FOR CIRCUIT BREAKER PROVISIONS.
6. INSTALL CONCRETE PAD FOR PADMOUNT GENERATOR AND ATS.
7. PROVIDE GALVANIZED RIGID ELBOW(S).
8. PROVIDE 3 POLE AUTOMATIC TRANSFER SWITCH SERVICE ENTRANCE RATED.
9. COORDINATE LOCATION OF UTILITY COMPANY INTERFACE WITH UTILITY COMPANY. ADJUST CONDUIT SIZES AND AMOUNTS AS NEEDED. SEE ALSO SITE PLAN E1.1.
10. INSTALL AN ELECTRICAL MONITORING METER ON THE INCOMING SERVICE FROM THE UTLITY TO TIE INTO THE ALABAMA NATIONAL GUARD BMS SYSTEM. THIS METER IS TO BE PROVIDED AND INSTALLED BY THE ELECTRICAL CONTRACTOR AND CONNECTED INTO BMS SYSTEM. PROVIDE ALL MATERIAL FOR COMPLETE INSTALLATION.
11. PROVIDE AND INSTALL SEAL OFF FITTING PER DETAIL 3/E7.3.
12. PROVIDE ONE (1) DOCKING STATION EITHER INTEGRAL OR SEPARATE FROM THE MANUAL TRANSFER SWITCH. PROVIDE WITH CAM LOC CONNECTORS. IDENTIFY PHASE ROTATION ON CAM-LOC CONNECTORS.

THE FOLLOWING ENHANCED POWER AND ENERGY METERS ARE APPROVED EQUALS:

MFG: VERIS INDUSTRIES
MODEL: E50H5 (LON FT SERIAL, STANDARD CT'S) OR
MODEL: E50F5A (LON FT SERIAL, ROPE CT'S) OR
MODEL: E50H5A (BACNET MS/TP SERIAL, ROPE CT'S)

MFG: SQUARED/SCHNEIDER ELECTRIC
MODEL: EM3561 (BACNET MS/TP SERIAL, STANDARD CT'S) OR
MODEL: EM3561A (BACNET MS/TP SERIAL, ROPE CT'S)

1. THE POWER METER SHALL PROVIDE AN ENHANCED FULL DATA SET INCLUDING DATA POINTS FOR WATER AND GAS METER TOTALIZERS.
2. THE POWER METER SHALL PROVIDE A PEAK DEMAND KW READING USING A FIXED OR ROLLING WINDOW, PROGRAMMABLE.
3. THE POWER METER SHALL PROVIDE A MINIMUM OF TWO PULSE ACCUMULATOR INPUT PORTS FOR CONNECTION OF WATER AND GAS METERS.
4. THE POWER METER SHALL PROVIDE A LON FT, BACNET OR MODBUS COMMUNICATIONS BUS FOR INTEGRATION INTO THE FACILITY EMCS.
5. THE SELECTION OF THE CURRENT TRANSFORMERS (CT) SHALL BE APPROPRIATE TO MATCH THE ELECTRICAL SERVICE BEING MONITORED.
6. THE METER SHALL INCLUDE A MANUFACTURER PROVIDED NEMA 4 ENCLOSURE WITH TRANSPARENT LOCKING COVER.
7. THE VOLTAGE MONITORING PICKUP SHALL BE FAULT PROTECTED BY EITHER INLINE FUSES OR A DEDICATED CIRCUIT BREAKER APPROPRIATELY SIZED FOR THE WIRE SIZE USED FOR THIS FUNCTION.
8. THE VOLTAGE MONITORING PICKUP SHALL INCLUDE A THREE PHASE AND NEUTRAL CONNECTION.

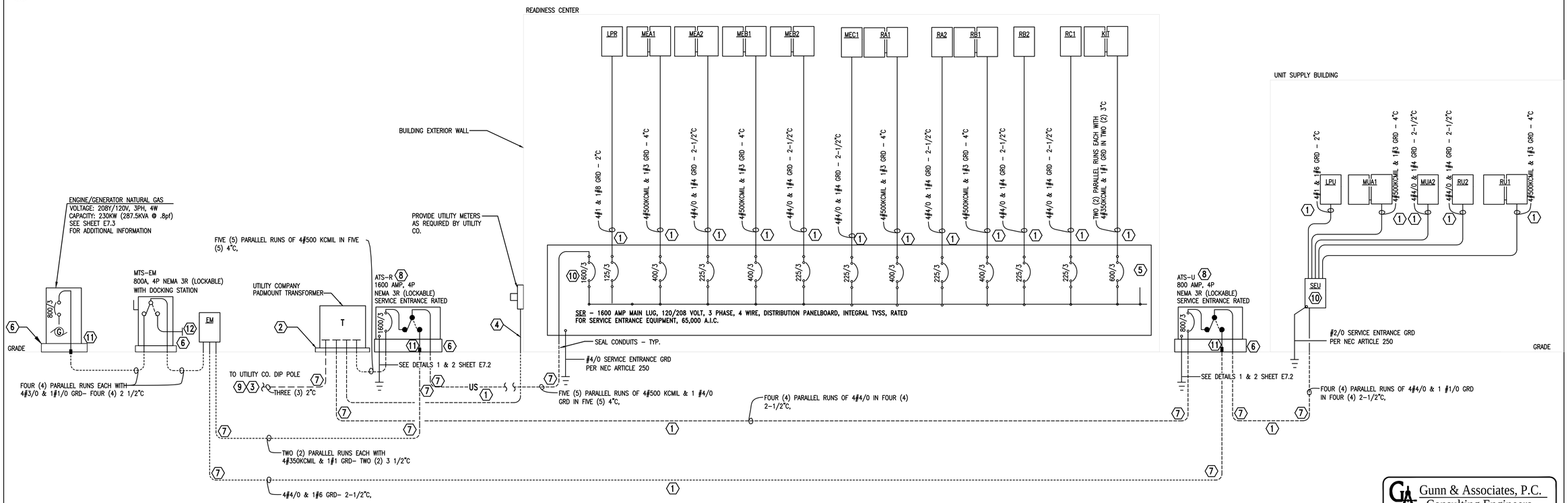

1 / E7.1 POWER RISER DIAGRAM

NO SCALE

SS&L ARCHITECTS
Montgomery | Dothan | Auburn | Huntsville | Pensacola
WWW.SSLARCH.COM | 256.285.1063

Rev.	Description	Date

Job Number 21112

Date NOVEMBER 1, 2024

Drawn By KRG, JBG

Checked By JBG

Project Title

HUNTSVILLE READINESS CENTER
5180 MOORE'S MILL ROAD
HUNTSVILLE AL, 35811

Sheet Title
SINGLE LINE DIAGRAM, DETAILS & NOTES

Sheet Number
E7.1

Gunn & Associates, P.C.
Consulting Engineers
3102 Highway 14
Millbrook, AL 36054
Tel: 334.285.1273
1200 Providence Park, Suite 200
Birmingham, AL 35242
GA#22-071

ALABAMA REGISTERED NO. 20431 PROFESSIONAL ENGINEER JOHN BARRY GRAILEE 11-01-24

NOTES

1. ALL GROUND ELECTRODE CONDUCTORS, SYSTEM BONDING CONDUCTORS, ETC., RUN SEPARATELY SHALL BE PROTECTED BY A CONDUIT SYSTEM.
2. ALL SYSTEM GROUNDING OR BONDING CONDUCTORS SHALL GENERALLY BE ENCLOSED BY A GRC CONDUIT. PROVIDE GROUND BUSHINGS ON EACH END AND BOND CONDUCTORS TO RACEWAY SYSTEM.
3. SYSTEM BONDING CONDUCTORS THAT PENETRATE CONCRETE SLABS SHALL BE ENCLOSED BY A PVC CONDUIT. PROVIDE BELL END FITTING ON EACH END AND SEAL. THOSE TERMINATING AT A STUB-UP SHALL BE FLUSH WITH FLOOR.

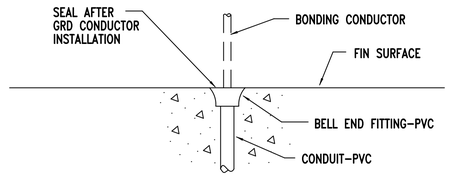

THROUGH CONCRETE

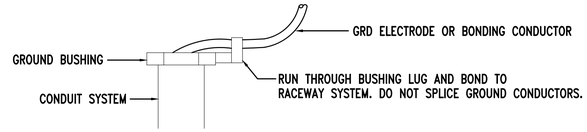

SURFACE MOUNTED

DETAIL - TYPICAL GROUND CONDUCTOR IN CONDUIT SYSTEM

DETAIL NOTES

1. LOCK-NUT ASSEMBLIES
2. METAL GROUNDING BUSHING
3. COPPER GROUND LUG
4. COPPER GROUND CONDUCTOR. REMOVE INSULATION AT BUSHING, RUN THROUGH BUSHING LUG AND BOND TO RACEWAY SYSTEM. DO NOT SPLICE OR TAP.
5. CONTINOUS COPPER GROUND CONDUCTOR FROM GROUND BUS THROUGH EACH BUSHING. DO NOT SPLICE OR TAP.

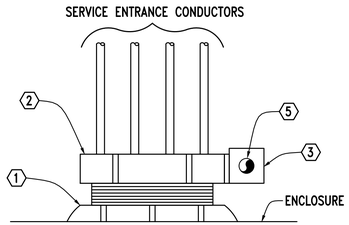

FOR SERVICE ENTRANCE CONDUITS

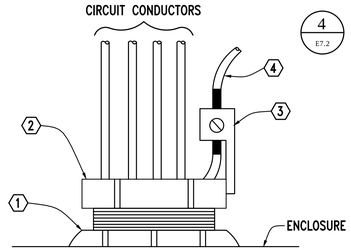

FOR FEEDER AND/OR BRANCH CIRCUITS

4 / E7.2 NO SCALE

GROUNDING AND BONDING INSTALLATION NOTES

1. ALL GROUNDING AND BONDING SHALL BE IN ACCORDANCE WITH THE NEC, NESC, IEEE, ANSI AND UL STANDARDS.
2. ALL DIMENSIONING INDICATED IN THESE DOCUMENTS ARE FOR REFERENCE AND COORDINATION PURPOSES ONLY. THE CONTRACTOR IS RESPONSIBLE FOR VERIFYING ALL DIMENSIONS IN THE FIELD.
3. THE PURPOSE OF THE GROUNDING AND BONDING SYSTEM IS TO ESTABLISH ALL EQUIPMENT ENCLOSURES, NON-CURRENT CARRYING METALLIC PORTIONS OF THE ELECTRICAL DISTRIBUTION SYSTEM, METAL PIPING, METAL BUILDING FRAME, ETC., AT A ZERO POTENTIAL RELATIVE TO THE EARTH GROUND AND PROVIDE FOR A SAFE, LOW IMPEDANCE RETURN PATH FOR GROUND-FAULT CURRENT. THIS SHALL BE ACCOMPLISHED IN THE FOLLOWING MANNER:
   a. PROVIDE A SOLIDLY GROUNDED SECONDARY SYSTEM.
   b. INTER-CONNECT ALL GROUND BUSES AND POINTS IN THE SYSTEM WITH A COPPER GRD CONDUCTOR (BUS) SYSTEM.
   c. ALL METALLIC RACEWAYS SHALL BE UL APPROVED AND MADE-UP TIGHT AT ALL COUPLINGS AND TERMINATIONS.
   d. ALL GROUND CONDUCTORS IN CIRCUITS SHALL BE CONTAINED WITHIN THE SAME RACEWAY AS CURRENT CARRYING CONDUCTORS.
   e. ALL SPLICES AND TERMINATIONS SHALL BE MADE TIGHT AND AS SUCH TO PROVIDE LOW IMPEDANCE AND SHALL HAVE THE SAME SHORT-TIME CURRENT-CARRYING CAPABILITY AS THE CONDUCTOR IT IS CONNECTED TO.
   f. ALL GRD ELECTRODES OR BONDING CONDUCTORS INSTALLED ALONE WITHIN A RACEWAY SHALL UTILIZE GRC WITH GROUNDING BUSHINGS AT EACH END. THIS GROUND CONDUCTOR SHALL LOOP THROUGH THE BUSHING LUG PRIOR TO TERMINATION.

DIMENSION BLOCK		
REF	ENGLISH	SI
A	1"	25.4mm
B	2"	50.8mm
C	2 1/2"	63.5mm
D	3"	76.2mm
E	1'-6"	.4572m

GROUND BUS NOTES

1. GROUND BUS INSTALLATION SHALL BE IN ACCORDANCE WITH THIS DETAIL AND AS INDICATED ON THE DRAWINGS.

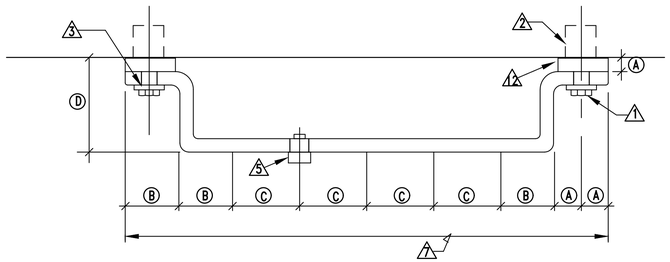

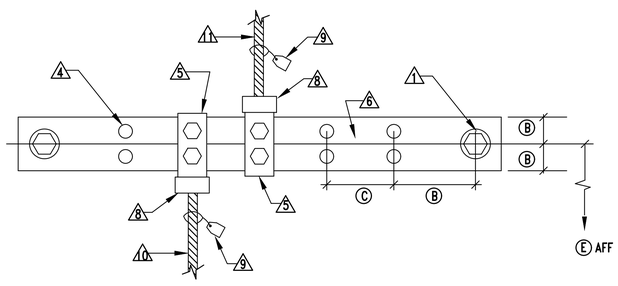

KEYED NOTES

1. 1/2" (12.7mm) X 1 1/2" (38.1mm) SILICON-BRONZE MACHINE BOLT & SILICON-BRONZE WASHER
2. 1/2" (12.7mm) EXPANSION ANCHOR
3. 9/16"ø (14.2875mm) HOLE IN BAR
4. DRILLED DOUBLE CONNECTOR HOLES
5. FLAT, TWO-HOLE CU CABLE CONNECTOR #6 TO #2 (DOUBLE LUGS) #1 TO #4/0 (SINGLE LUGS ONLY)
6. 4" (101.6mm) WIDE, 1/4" (6.35mm) DEEP COPPER BUS BAR.
7. LENGTH AS REQUIRED BY NUMBER OF CONDUCTOR CONNECTIONS OR AS SPECIFICALLY INDICATED. PROVIDE INTERMEDIATE WALL SUPPORTS AS REQUIRED.
8. TYP CU GRD CONDUCTOR CONNECTION
9. DESCRIPTION TAG. STATE SIZE OF CONDUCTOR AND TO WHAT IT IS CONNECTED TO.
10. TYP GRD CONNECTION FROM BELOW. SEE APPLICABLE DETAILS FOR SLAB PENETRATIONS.
11. TYP GRD CONNECTION FROM ABOVE. SEE APPLICABLE DETAILS FOR GRC INSTALLATIONS.
12. INSULATED NON-CONDUCTIVE SPACER

2 / E7.2 DETAIL - TYPICAL GROUND BUS INSTALLATION
NO SCALE

NOTES

1. GROUNDING ELECTRODE SYSTEM SHALL BE IN ACCORDANCE WITH NEC ARTICLE 250
2. GROUNDING ELECTRODE CONDUCTORS SHALL BE CONTINUOUS AND NOT SPLICED.
3. GROUNDING ELECTRODE CONDUCTORS SHALL BE ENCLOSED FULL LENGTH GALVANIZED RIGID CONDUIT AS INDICATED.
4. GROUNDING ELECTRODE CONDUCTORS SHALL BE BARE COPPER.
5. ALL BUSHINGS INSTALLED IN DIRECT CONTACT WITH EARTH SHALL BE APPROVED FOR THE PURPOSE.
6. GROUND CONNECTIONS BELOW GRADE SHALL BE EXOTHERMICALLY WELDED TYPE.
7. PROVIDE GROUNDING JUMPERS FROM COLD WATER PIPING TO HOT WATER PIPING AT EACH WATER HEATER. PROVIDE GROUNDING JUMPERS AT EACH INSULATED JOINT OR ANY PLACE WHERE GROUND IS BROKEN TO MAINTAIN INTEGRITY OF GROUNDING SYSTEM.

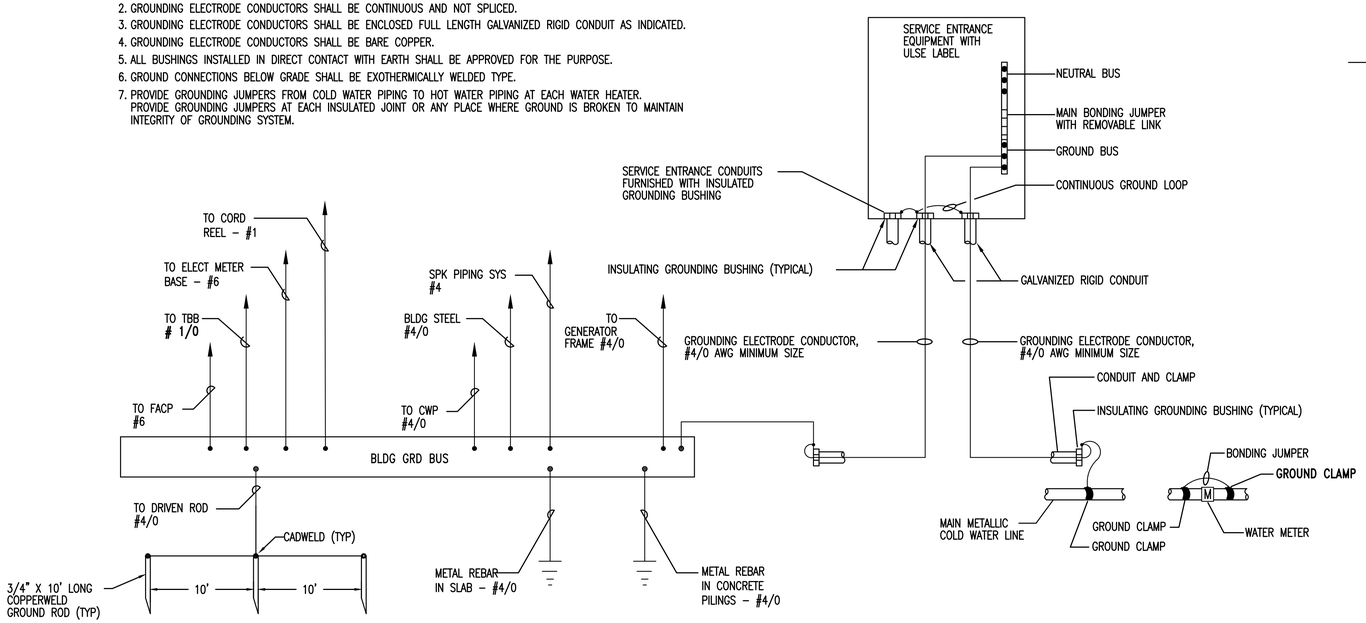

1 / E7.2 DETAIL - SERVICE ENTRANCE GROUNDING INSTALLATION
NO SCALE

3 / E7.2 DETAIL - TYPICAL GROUND BUSHING INSTALLATION
NO SCALE

S|S&L ARCHITECTS
Montgomery | Dothan | Auburn | Huntsville | Pensacola
WWW.SSLARCH.COM | 256.285.1063

Rev.	Description	Date

Job Number 21112
Date NOVEMBER 1, 2024
Drawn By KRG, JBG
Checked By JBG

Project Title
HUNTSVILLE READINESS CENTER
5180 MOORE'S MILL ROAD
HUNTSVILLE AL, 35811

Sheet Title
GROUNDING DETAILS & NOTES

Sheet Number
E7.2

Gunn & Associates, P.C.
Consulting Engineers
3102 Highway 14
Millbrook, AL 36054
Tel: 334.285.1273
1200 Providence Park, Suite 200
Birmingham, AL 35242
GA#22-071

ALABAMA REGISTERED
NO. 20431
PROFESSIONAL
11-01-24
ENGINEER
JOHN BARRY GRAY, P.E.

NOTES

1. COLUMN SHOWN INDICATES TYPE OF MALFUNCTION SIGNAL AT THE REMOTE PANEL (V – VISUAL, A/V – AUDIBLE AND VISUAL).
2. LED LAMP INDICATORS
3. LAMP LEGEND
4. AUDIBLE ALARM DEVICE
5. AUDIBLE ALARM DEVICE SILENCE SWITCH

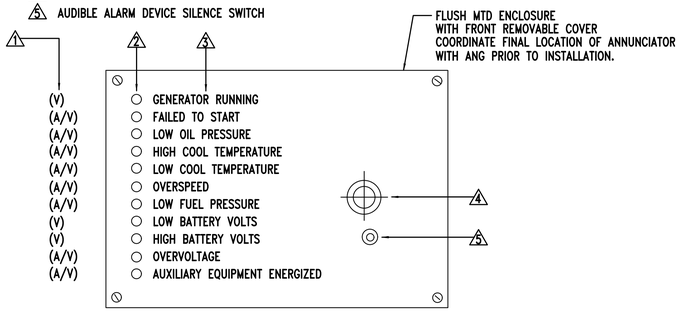

6 E7.3 DETAIL - REMOTE GENERATOR ANNUNCIATOR PANEL
NOT TO SCALE

DIMENSION BLOCK		
REF	ENGLISH	SI
A	1/4"	6.35mm
B	0'-4"	101.6mm
C	0'-10"	254.0mm

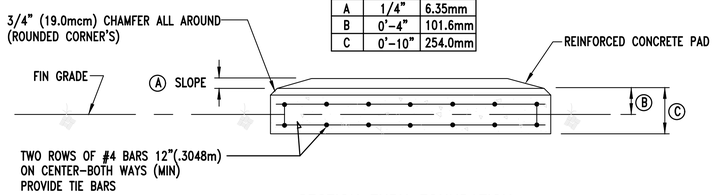

SECTION THRU FOUNDATION

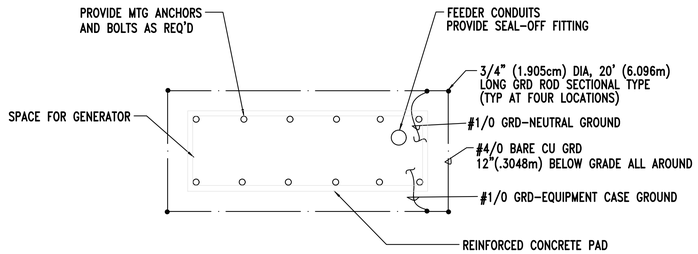

FOUNDATION PLAN

4 E7.3 DETAIL - PAD-MOUNTED GENERATOR PROVISIONS
NOT TO SCALE

NOTES:

1. ALL DIMENSIONS SHALL BE VERIFIED WITH ACTUAL SHOP DRAWINGS. PROVIDE PROPER CLEARENCES FOR ACCESS OF GENERATOR UNIT AND FUEL TANK.
2. INSTALL ALL CONDUIT & WIRING IN ACCORDANCE WITH NEC. PROVIDE EXPLOSION PROOF SEALS, FITTINGS, DEVICES, ETC., AS REQUIRED.

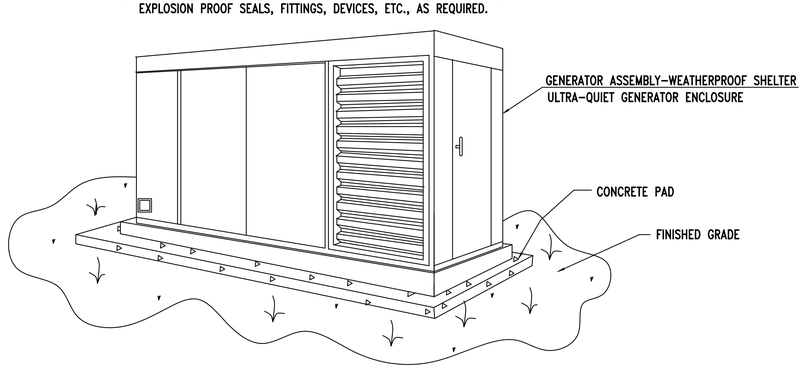

PERSPECTIVE

5 E7.3 DETAIL - GENERATOR ENCLOSURE (ORTHOGRAPHIC VIEW)
NOT TO SCALE

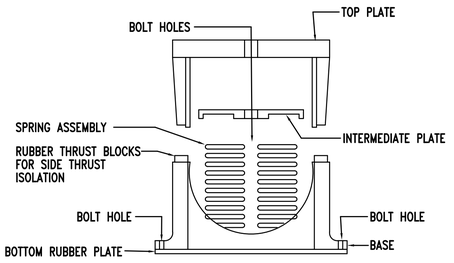

2 E7.3 DETAIL - TYPICAL VIBRATION ISOLATOR
NOT TO SCALE

NOTES:

1. SEALING COMPOUND MUST HAVE A MINIMUM THICKNESS OF NOT LESS THAN THE TRADE SIZE OF CONDUIT IN WHICH IT IS INSTALLED AND IN NO CASE LESS THAN 5/8"(15.875mm).
2. SEALING FITTING AND COMPOUND SHALL BE FURNISHED AS ONE PACKAGE FROM ONE MANUFACTURER WITH A COMPLETE SET OF INSTRUCTIONS.
3. VERTICAL FITTING SHOWN. HORIZONTAL, TEE, ELBOW AND OTHER FITTINGS ARE SIMILAR IN DESIGN.

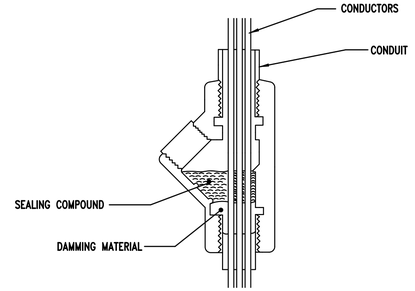

3 E7.3 DETAIL - TYPICAL SEALING FITTING INSTALLATION
NOT TO SCALE

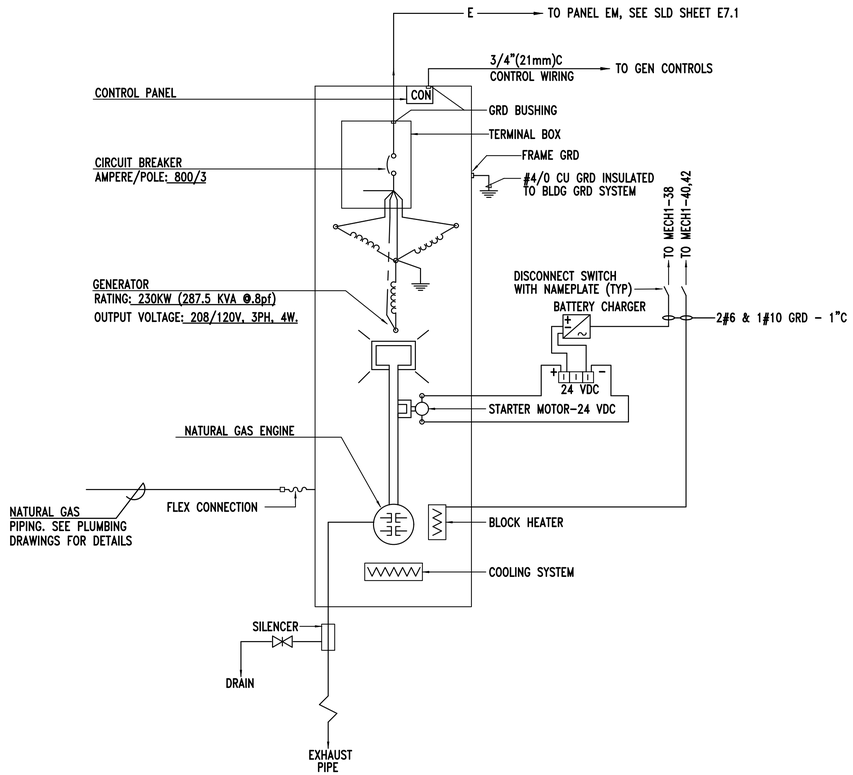

1 E7.3 DETAIL - GENERATOR SCHMATIC
NO SCALE

STANDBY GENERATOR SYSTEM NOTES

1. STANDBY GENERATOR SYSTEM SHALL CONSIST OF BUT NOT BE LIMITED TO THE FOLLOWING:
   a. GENERATOR SET
   b. NATURAL GAS FUEL SYSTEM
   c. POWER SYSTEM
   d. AUTOMATIC TRANSFER SYSTEM
   e. CONTROLS
   f. STARTING SYSTEM
   g. COOLING SYSTEM
   h. EXHAUST SYSTEM
   i. LUBRICATION SYSTEM
2. INSTALLATION SHALL COMPLY WITH THE REQUIREMENTS OF THE NATIONAL ELECTRICAL CODE (NEC), NEMA, NESC AND NATIONAL FIRE PROTECTION AGENCY (NFPA).
3. ALL CONDUCTIVE PARTS OF EQUIPMENT, ENCLOSURES, FRAMES, ETC., SHALL BE GROUNDED.
4. ALL CLEARANCES SHALL BE MAINTAINED PER NESC AND NEC. ALL PARTS, DEVICES, EQUIPMENT, ETC. WHICH REQUIRE MAINTENANCE, ADJUSTMENT, OPERATION OR EXAMINATION DURING NORMAL NETWORK OPERATION SHALL BE ARRANGED SO AS TO BE ACCESSIBLE BY THE PROVISION OF ADEQUATE WORKING SPACES, WORKING FACILITIES AND CLEARANCES. UNLESS NOTED OTHERWISE ALL CLEARANCES ARE MEASURED FROM SURFACE TO SURFACE.
5. ALL DIMENSIONS INDICATED IN THESE DOCUMENTS ARE FOR REFERENCE AND COORDINATION PURPOSES ONLY. THE CONTRACTOR IS RESPONSIBLE FOR VERIFYING ALL DIMENSIONS IN THE FIELD.
6. WIRING SYSTEMS SHALL BE IN ACCORDANCE WITH NEC AND THE FOLLOWING:
   a. SEE SINGLE LINE DIAGRAM FOR POWER SYSTEM REQUIREMENTS.
   b. CONTROL WIRING SHALL BE INSTALLED IN CONDUITS INDICATED. WIRING TO BE IN ACCORDANCE WITH MANUFACTURER'S REQUIREMENTS FOR THE EQUIPMENT SPECIFIED. COORDINATE WITH SHOP DRAWINGS.
   c. PROVIDE FLEXIBLE CONDUIT CONNECTIONS TO THE GENERATOR SET.
7. NATURAL GAS FUEL SYSTEM SEE PLUMBING DRAWINGS FOR DETAILS.

Gunn & Associates, P.C.
Consulting Engineers
3102 Highway 14
Millbrook, AL 36054
Tel: 334.285.1273
1200 Providence Park, Suite 200
Birmingham, AL 35242
GA#22-071

SS&L ARCHITECTS
Montgomery | Dothan | Auburn | Huntsville | Pensacola
WWW.SSLARCH.COM | 256.285.1063

Rev.	Description	Date

Job Number 21112
Date NOVEMBER 1, 2024
Drawn By KRG, JBG
Checked By JBG
Project Title

HUNTSVILLE READINESS CENTER
5180 MOORE'S MILL ROAD
HUNTSVILLE AL, 35811

Sheet Title
GENERATOR DETAILS & NOTES

Sheet Number
E7.3

ALABAMA REGISTERED NO. 20431 PROFESSIONAL 11-01-24 ENGINEER JOHN BARRY GRAVLEE

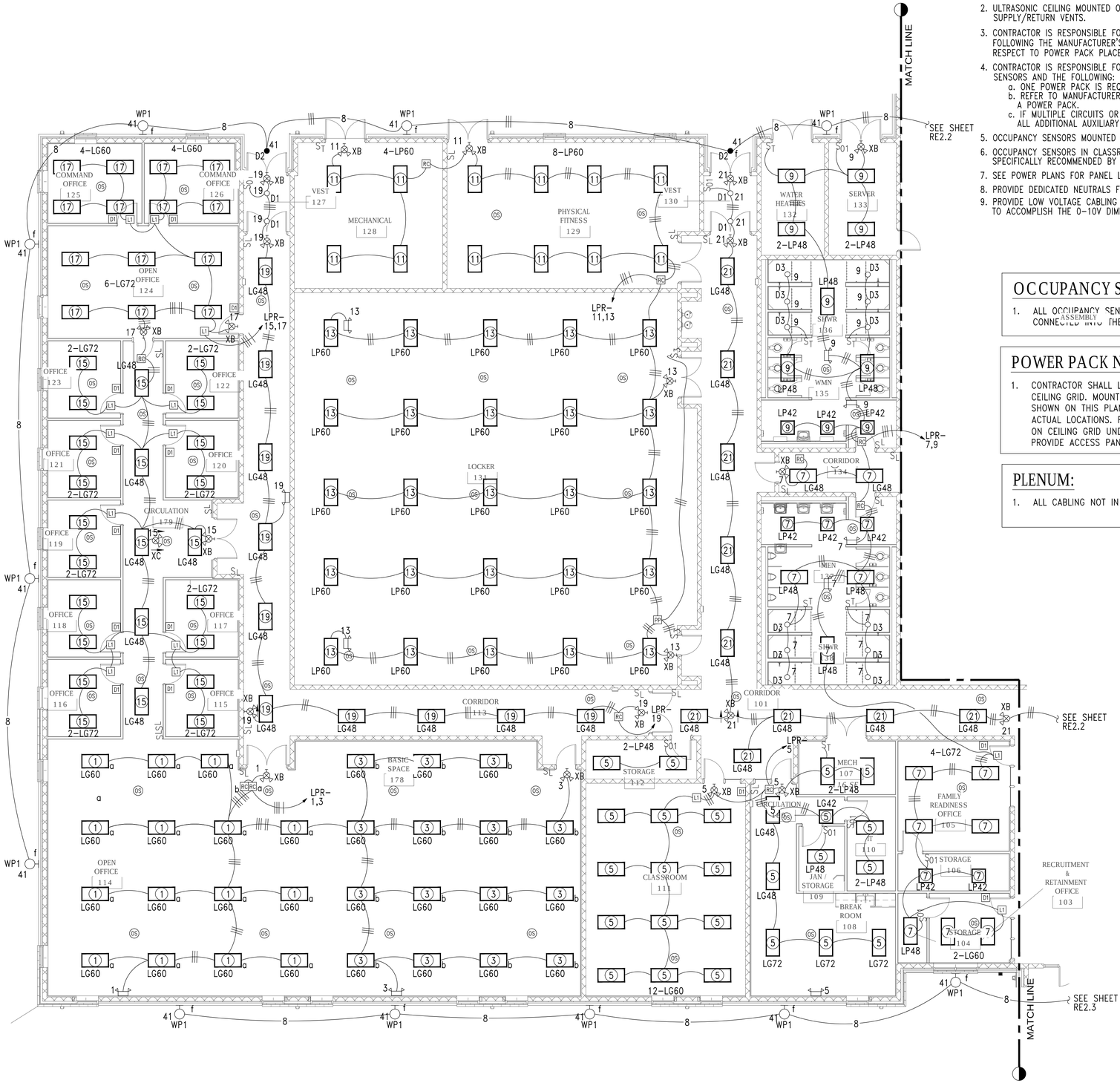

GENERAL NOTES:

1. ALL OCCUPANCY SENSORS LOCATIONS ARE APPROXIMATE, REFER TO MANUFACTURER'S INSTALLATION INSTRUCTIONS FOR EXACT MOUNTING AND SPACING REQUIREMENTS PRIOR TO INSTALLATION.
2. ULTRASONIC CEILING MOUNTED OCCUPANCY SENSORS SHALL BE LOCATED A MINIMUM OF SIX (6) FEET FROM HVAC SUPPLY/RETURN VENTS.
3. CONTRACTOR IS RESPONSIBLE FOR PROPER SENSITIVITY AND TIME DELAY SETTINGS FOR OCCUPANCY SENSORS, FOLLOWING THE MANUFACTURER'S RECOMMENDED PLACEMENT, AND FIELD VERIFICATION OF CIRCUITS WITH RESPECT TO POWER PACK PLACEMENT.
4. CONTRACTOR IS RESPONSIBLE FOR FIELD VERIFICATION OF REQUIRED NUMBER OF POWER PACKS FOR OCCUPANCY SENSORS AND THE FOLLOWING:
   a. ONE POWER PACK IS REQUIRED FOR EACH CONTROLLED CIRCUIT.
   b. REFER TO MANUFACTURER'S INSTALLATION GUIDE FOR MAXIMUM NUMBER OF SENSORS CONNECTED TO A POWER PACK.
   c. IF MULTIPLE CIRCUITS OR DUAL SWITCHING ARE TO BE CONTROLLED BY OCCUPANCY SENSORS, PROVIDE ALL ADDITIONAL AUXILIARY RELAYS AND POWER PACKS AS NEEDED.
5. OCCUPANCY SENSORS MOUNTED OVER DOORWAYS SHALL BE PLACED ONE (1) FOOT INSIDE THRESHOLD.
6. OCCUPANCY SENSORS IN CLASSROOMS SHALL HAVE THE WALK-THROUGH FEATURE DISABLED. UNLESS SPECIFICALLY RECOMMENDED BY MANUFACTURER.
7. SEE POWER PLANS FOR PANEL LOCATIONS.
8. PROVIDE DEDICATED NEUTRALS FOR EACH MULTIWIRE HOMERUN PER NEC.
9. PROVIDE LOW VOLTAGE CABLING AS REQUIRED TO EACH LIGHT FIXTURE FROM THE 0-10V DIMMING SWITCH AS REQUIRED TO ACCOMPLISH THE 0-10V DIMMING.

OCCUPANCY SENSOR NOTES:

1. ALL OCCUPANCY SENSORS SHALL BE PROVIDED WITH AN INPUT THAT CAN BE CONNECTED INTO THE MECHANICAL CONTROL SYSTEM. ASSEMBLY

POWER PACK NOTES:

1. CONTRACTOR SHALL LOCATE ALL POWER PACKS ABOVE DOORS IN EACH ROOM 6" ABOVE CEILING GRID. MOUNT IN UTILITY TYPE ROOMS WHENEVER POSSIBLE. POWER PACKS SHOWN ON THIS PLAN IS DIAGRAMMATIC FOR CIRCUITRY. DO NOT USE THESE FOR ACTUAL LOCATIONS. PROVIDE A PHENOLIC LABEL WITH 1" TEXT THAT READS "PP" GLUED ON CEILING GRID UNDER POWER PACK FOR EACH LOCATION FOR FUTURE MAINTENANCE. PROVIDE ACCESS PANEL WHERE LOCATED ABOVE HARD CEILINGS.

PLENUM:

1. ALL CABLING NOT IN CONDUIT ABOVE CEILINGS SHALL BE PLENUM RATED.

1/8" = 1'-0"

8' 0 8 16 FT

GRAPHIC SCALE

ZONE "A" FLOOR PLAN - LIGHTING

1 / RE2.1

SCALE: 1/8"=1'-0"

S|S&L ARCHITECTS
Montgomery | Dothan | Auburn | Huntsville | Pensacola
WWW.SSLARCH.COM | 256.285.1063

Rev.	Description	Date

Job Number: 21112

Date: NOVEMBER 1, 2024

Drawn By: KRG, JBG

Checked By: JBG

Project Title

HUNTSVILLE READINESS CENTER
5180 MOORE'S MILL ROAD
HUNTSVILLE AL, 35811

Sheet Title: ZONE "A" FLOOR PLAN - LIGHTING

Sheet Number: RE2.1

Gunn & Associates, P.C.
Consulting Engineers
3102 Highway 14, Millbrook, AL 36054, Tel: 334.285.1273
1200 Providence Park, Suite 200, Birmingham, AL 35242
GA#22-071

ALABAMA REGISTERED NO. 20431 PROFESSIONAL 11-01-24 ENGINEER JOHN BARRY GRAVLEE

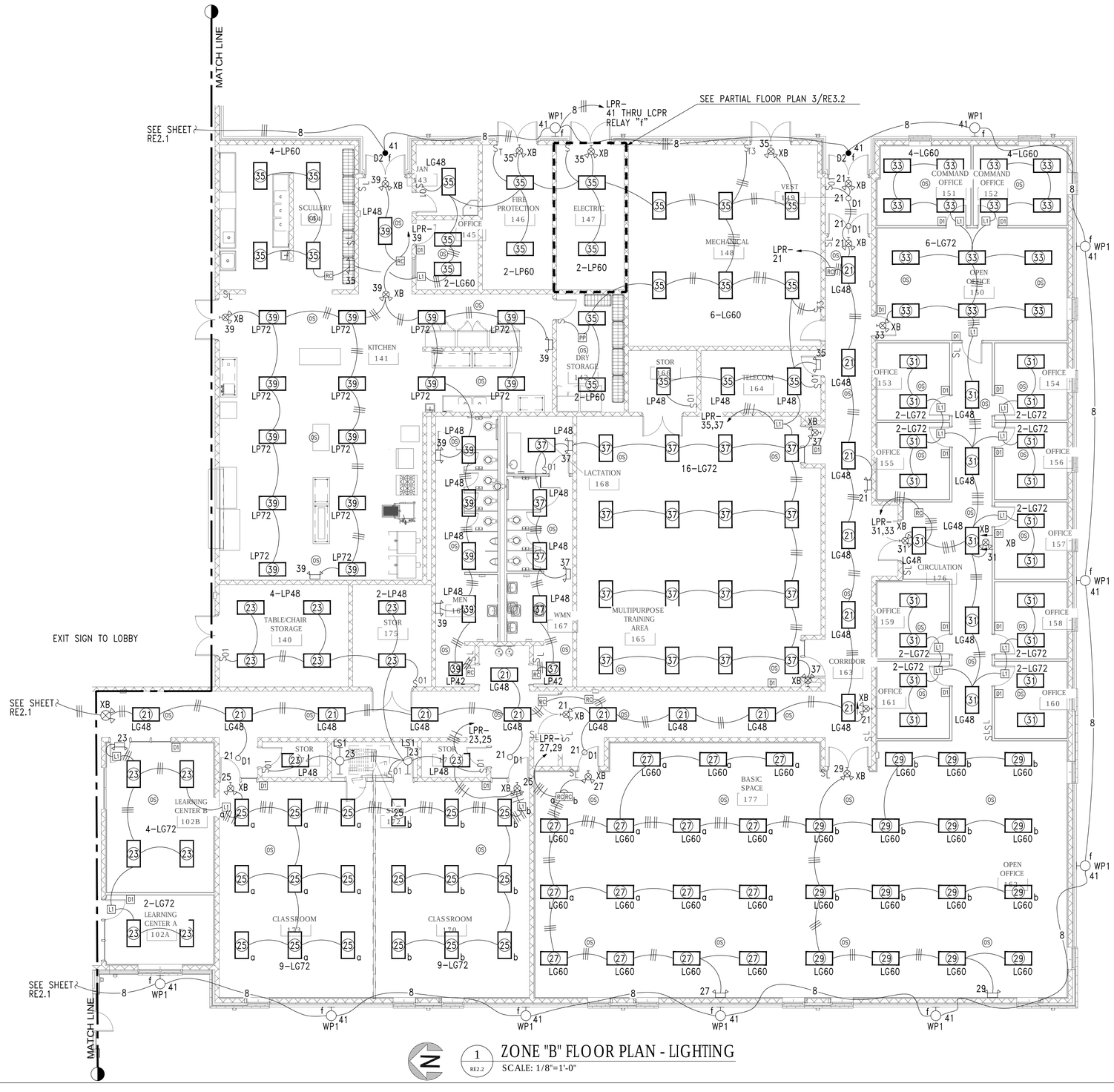

1 RE2.2 ZONE "B" FLOOR PLAN - LIGHTING

SCALE: 1/8"=1'-0"

GENERAL NOTES:

1. ALL OCCUPANCY SENSORS LOCATIONS ARE APPROXIMATE, REFER TO MANUFACTURER'S INSTALLATION INSTRUCTIONS FOR EXACT MOUNTING AND SPACING REQUIREMENTS PRIOR TO INSTALLATION.
2. ULTRASONIC CEILING MOUNTED OCCUPANCY SENSORS SHALL BE LOCATED A MINIMUM OF SIX (6) FEET FROM HVAC SUPPLY/RETURN VENTS.
3. CONTRACTOR IS RESPONSIBLE FOR PROPER SENSITIVITY AND TIME DELAY SETTINGS FOR OCCUPANCY SENSORS, FOLLOWING THE MANUFACTURER'S RECOMMENDED PLACEMENT, AND FIELD VERIFICATION OF CIRCUITS WITH RESPECT TO POWER PACK PLACEMENT.
4. CONTRACTOR IS RESPONSIBLE FOR FIELD VERIFICATION OF REQUIRED NUMBER OF POWER PACKS FOR OCCUPANCY SENSORS AND THE FOLLOWING:
   a. ONE POWER PACK IS REQUIRED FOR EACH CONTROLLED CIRCUIT.
   b. REFER TO MANUFACTURER'S INSTALLATION GUIDE FOR MAXIMUM NUMBER OF SENSORS CONNECTED TO A POWER PACK.
   c. IF MULTIPLE CIRCUITS OR DUAL SWITCHING ARE TO BE CONTROLLED BY OCCUPANCY SENSORS, PROVIDE ALL ADDITIONAL AUXILIARY RELAYS AND POWER PACKS AS NEEDED.
5. OCCUPANCY SENSORS MOUNTED OVER DOORWAYS SHALL BE PLACED ONE (1) FOOT INSIDE THRESHOLD.
6. OCCUPANCY SENSORS IN CLASSROOMS SHALL HAVE THE WALK-THROUGH FEATURE DISABLED. UNLESS SPECIFICALLY RECOMMENDED BY MANUFACTURER.
7. SEE POWER PLANS FOR PANEL LOCATIONS.
8. PROVIDE DEDICATED NEUTRALS FOR EACH MULTIWIRE HOMERUN PER NEC.
9. PROVIDE LOW VOLTAGE CABLING AS REQUIRED TO EACH LIGHT FIXTURE FROM THE 0-10V DIMMING SWITCH AS REQUIRED TO ACCOMPLISH THE 0-10V DIMMING.

OCCUPANCY SENSOR NOTES:

1. ALL OCCUPANCY SENSORS SHALL BE PROVIDED WITH AN INPUT THAT CAN BE CONNECTED INTO THE MECHANICAL CONTROL SYSTEM.

POWER PACK NOTES:

1. CONTRACTOR SHALL LOCATE ALL POWER PACKS ABOVE DOORS IN EACH ROOM 6" ABOVE CEILING GRID. MOUNT IN UTILITY TYPE ROOMS WHENEVER POSSIBLE. POWER PACKS SHOWN ON THIS PLAN IS DIAGRAMMATIC FOR CIRCUITRY. DO NOT USE THESE FOR ACTUAL LOCATIONS. PROVIDE A PHENOLIC LABEL WITH 1" TEXT THAT READS "PP" GLUED ON CEILING GRID UNDER POWER PACK FOR EACH LOCATION FOR FUTURE MAINTENANCE. PROVIDE ACCESS PANEL WHERE LOCATED ABOVE HARD CEILINGS.

PLENUM:

1. ALL CABLING NOT IN CONDUIT ABOVE CEILINGS SHALL BE PLENUM RATED.

1/8" = 1'-0

8' 0 8 16 FT

GRAPHIC SCALE

Gunn & Associates, P.C.
Consulting Engineers
3102 Highway 14
Millbrook, AL 36054
Tel: 334.285.1273
1200 Providence Park, Suite 200
Birmingham, AL 35242
GA#22-071

SS&L ARCHITECTS
Montgomery | Dothan | Auburn | Huntsville | Pensacola
WWW.SSLARCH.COM | 256.285.1063

Rev.	Description	Date

Job Number 21112

Date NOVEMBER 1, 2024

Drawn By KRG, JBG

Checked By JBG

Project Title

HUNTSVILLE READINESS CENTER
5180 MOORE'S MILL ROAD
HUNTSVILLE AL, 35811

Sheet Title
ZONE "B" FLOOR PLAN - LIGHTING

Sheet Number
RE2.2

ALABAMA REGISTERED PROFESSIONAL ENGINEER JOHN BARRY GUNN 20431 11-01-24

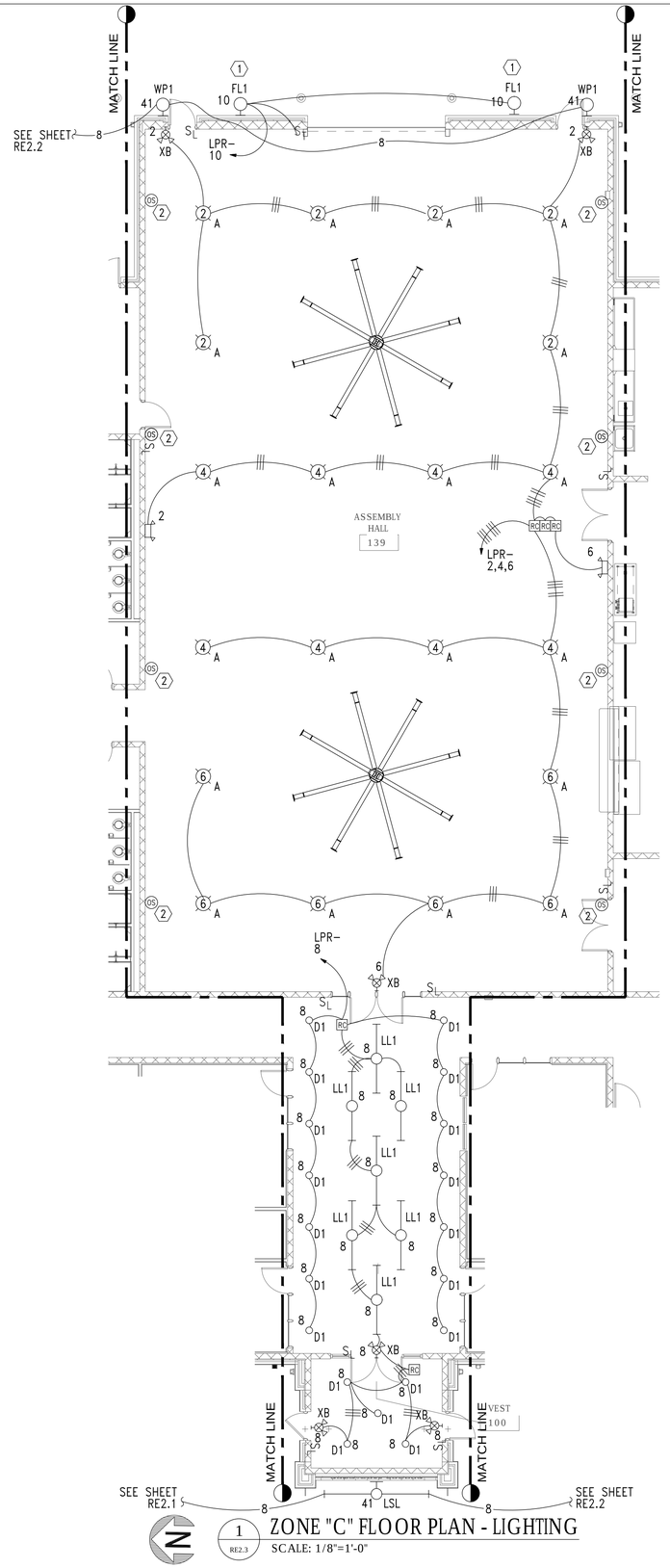

1 RE2.3 ZONE "C" FLOOR PLAN - LIGHTING

SCALE: 1/8"=1'-0"

GENERAL NOTES:

1. ALL OCCUPANCY SENSORS LOCATIONS ARE APPROXIMATE, REFER TO MANUFACTURER'S INSTALLATION INSTRUCTIONS FOR EXACT MOUNTING AND SPACING REQUIREMENTS PRIOR TO INSTALLATION.
2. ULTRASONIC CEILING MOUNTED OCCUPANCY SENSORS SHALL BE LOCATED A MINIMUM OF SIX (6) FEET FROM HVAC SUPPLY/RETURN VENTS.
3. CONTRACTOR IS RESPONSIBLE FOR PROPER SENSITIVITY AND TIME DELAY SETTINGS FOR OCCUPANCY SENSORS, FOLLOWING THE MANUFACTURER'S RECOMMENDED PLACEMENT, AND FIELD VERIFICATION OF CIRCUITS WITH RESPECT TO POWER PACK PLACEMENT.
4. CONTRACTOR IS RESPONSIBLE FOR FIELD VERIFICATION OF REQUIRED NUMBER OF POWER PACKS FOR OCCUPANCY SENSORS AND THE FOLLOWING:
   a. ONE POWER PACK IS REQUIRED FOR EACH CONTROLLED CIRCUIT.
   b. REFER TO MANUFACTURER'S INSTALLATION GUIDE FOR MAXIMUM NUMBER OF SENSORS CONNECTED TO A POWER PACK.
   c. IF MULTIPLE CIRCUITS OR DUAL SWITCHING ARE TO BE CONTROLLED BY OCCUPANCY SENSORS, PROVIDE ALL ADDITIONAL AUXILIARY RELAYS AND POWER PACKS AS NEEDED.
5. OCCUPANCY SENSORS MOUNTED OVER DOORWAYS SHALL BE PLACED ONE (1) FOOT INSIDE THRESHOLD.
6. OCCUPANCY SENSORS IN CLASSROOMS SHALL HAVE THE WALK-THROUGH FEATURE DISABLED. UNLESS SPECIFICALLY RECOMMENDED BY MANUFACTURER.
7. SEE POWER PLANS FOR PANEL LOCATIONS.
8. PROVIDE DEDICATED NEUTRALS FOR EACH MULTIWIRE HOMERUN PER NEC.
9. PROVIDE LOW VOLTAGE CABLING AS REQUIRED TO EACH LIGHT FIXTURE FROM THE 0-10V DIMMING SWITCH AS REQUIRED TO ACCOMPLISH THE 0-10V DIMMING.

OCCUPANCY SENSOR NOTES:

1. ALL OCCUPANCY SENSORS SHALL BE PROVIDED WITH AN INPUT THAT CAN BE CONNECTED INTO THE MECHANICAL CONTROL SYSTEM.

POWER PACK NOTES:

1. CONTRACTOR SHALL LOCATE ALL POWER PACKS ABOVE DOORS IN EACH ROOM 6" ABOVE CEILING GRID. MOUNT IN UTILITY TYPE ROOMS WHENEVER POSSIBLE. POWER PACKS SHOWN ON THIS PLAN IS DIAGRAMMATIC FOR CIRCUITRY. DO NOT USE THESE FOR ACTUAL LOCATIONS. PROVIDE A PHENOLIC LABEL WITH 1" TEXT THAT READS "PP" GLUED ON CEILING GRID UNDER POWER PACK FOR EACH LOCATION FOR FUTURE MAINTENANCE. PROVIDE ACCESS PANEL WHERE LOCATED ABOVE HARD CEILINGS.

PLENUM:

1. ALL CABLING NOT IN CONDUIT ABOVE CEILINGS SHALL BE PLENUM RATED.

SHEET NOTES:

1. MOUNT FLOOD LIGHT AT SAME HEIGHT AS TOP OF GARAGE DOOR.
2. MOUNT OCCUPANCY SENSOR ON WALL. SELECT OCCUPANCY SENSOR FOR COMPLETE COVERAGE OF DRILL HALL AREA.

1/8" = 1'-0

8' 0 8 16 FT

GRAPHIC SCALE

Gunn & Associates, P.C.
Consulting Engineers
3102 Highway 14
Millbrook, AL 36054
Tel: 334.285.1273
1200 Providence Park, Suite 200
Birmingham, AL 35242
GA#22-071

S|S&L ARCHITECTS
Montgomery | Dothan | Auburn | Huntsville | Pensacola
WWW.SSLARCH.COM | 256.285.1063

Rev.	Description	Date

Job Number 21112

Date NOVEMBER 1, 2024

Drawn By KRG, JBG

Checked By JBG

Project Title

HUNTSVILLE READINESS CENTER
5180 MOORE'S MILL ROAD
HUNTSVILLE AL, 35811

Sheet Title
ZONE "C"
FLOOR PLAN - LIGHTING

Sheet Number
RE2.3

ALABAMA
NO. 20431
PROFESSIONAL
11-01-24
ENGINEER
JOHN BARRY GRAILEE

SHEET NOTES:

1. PROVIDE NEMA L5-30R RECEPTACLE. CONTRACTOR SHALL MOUNT RECEPTACLE ON BACK OF COMMUNICATIONS RACK FROM CEILING ABOVE. PROVIDE KELLUMS GRIPS AND STRAIN RELIEFS AND FLEXIABLE CONNECTION DOWN TO THE RACK FROM THE CEILING.
2. OWNER FURNISHED-CONTRACTOR INSTALLED TELE-POWER POLE. 120 VOLT, 7 WIRE. PROVIDE JUNCTION BOX ABOVE FINISHED CEILING WITH CAPPED CIRCUIT FOR FUTURE POWER POLE. CONTRACTOR TO CONNECT POWER TO FURNITURE ONCE FURNITURE IS INSTALLED.
3. LED CLOCK/TIMER. VERIFY LOCATION OF CLOCK/TIMER WITH OWNER PRIOR TO ROUGH-IN.
4. FOR WALL MOUNTED TV. COORDINATE WITH ARCHITECTURAL ELEVATIONS PRIOR TO ROUGH-IN.
5. COORDINATE WITH OWNER FOR FINAL ROUGH-IN LOCATION OF TV AND ASSOCIATED OUTLETS.
6. SEE 1/4" SCALE PLAN THIS SHEET FOR POWER REQUIREMENTS.

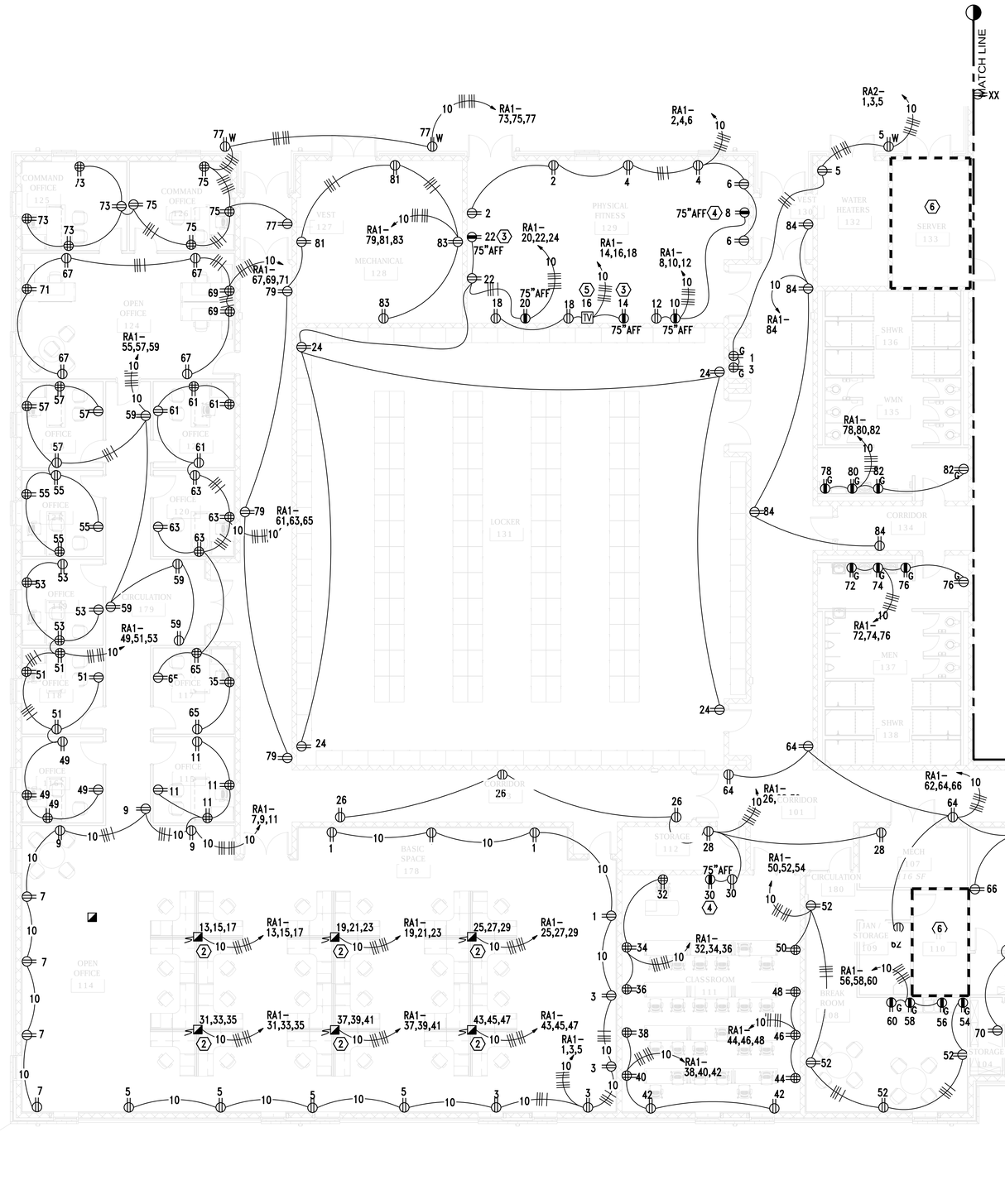

1 RE3.1 — ZONE "A" FLOOR PLAN - POWER
SCALE: 1/8"=1'-0"

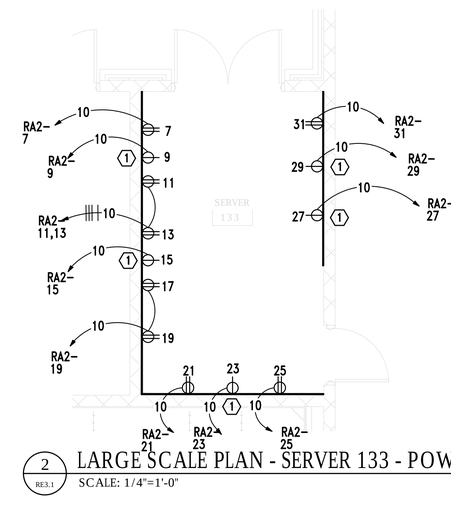

2 RE3.1 — LARGE SCALE PLAN - SERVER 133 - POWER
SCALE: 1/4"=1'-0"

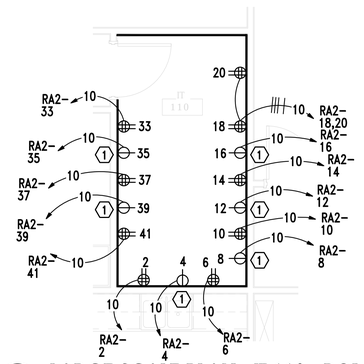

3 RE3.1 — LARGE SCALE PLAN - IT 110 - POWER
SCALE: 1/4"=1'-0"

1/4" = 1'-0
4' 0 4 8 FT.
GRAPHIC SCALE

1/8" = 1'-0
8' 0 8 16 FT
GRAPHIC SCALE

Gunn & Associates, P.C.
Consulting Engineers
3102 Highway 14
Millbrook, AL 36054
Tel: 334.285.1273
1200 Providence Park, Suite 200
Birmingham, AL 35242
GA#22-071

S|S&L ARCHITECTS
Montgomery | Dothan | Auburn | Huntsville | Pensacola
WWW.SSLARCH.COM | 256.285.1063

Rev.	Description	Date

Job Number	21112
Date	NOVEMBER 1, 2024
Drawn By	KRG, JBG
Checked By	JBG

Project Title

HUNTSVILLE READINESS CENTER
5180 MOORE'S MILL ROAD
HUNTSVILLE AL, 35811

Sheet Title
ZONE "A" FLOOR PLAN - POWER

Sheet Number
RE3.1

ALABAMA REGISTERED NO. 20431 PROFESSIONAL 11-01-24 ENGINEER JOHN BARRY GRAVLEE

SHEET NOTES:

1. PROVIDE NEMA L5-30R RECEPTACLE. CONTRACTOR SHALL MOUNT RECEPTACLE ON BACK OF COMMUNICATIONS RACK FROM CEILING ABOVE. PROVIDE KELLUMS GRIPS AND STRAIN RELIEFS AND FLEXIABLE CONNECTION DOWN TO THE RACK FROM THE CEILING.
2. FOR WALL MOUNTED TV. COORDINATE WITH ARCHITECTURAL ELEVATIONS PRIOR TO ROUGH-IN.
3. SEE 1/4" SCALE PLAN THIS SHEET FOR POWER REQUIREMENTS.
4. OWNER FURNISHED-CONTRACTOR INSTALLED TELE-POWER POLE. 120 VOLT, 7 WIRE. PROVIDE JUNCTION BOX ABOVE FINISHED CEILING WITH CAPPED CIRCUIT FOR FUTURE POWER POLE. CONTRACTOR TO CONNECT POWER TO FURNITURE ONCE FURNITURE IS INSTALLED.

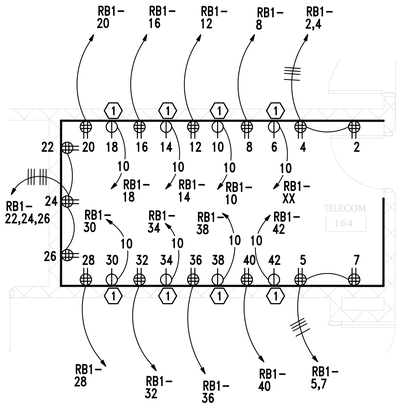

2 RE3.2 — PARTIAL FLOOR PLAN - TELECOM 164 - POWER
SCALE: 1/4"=1'-0"

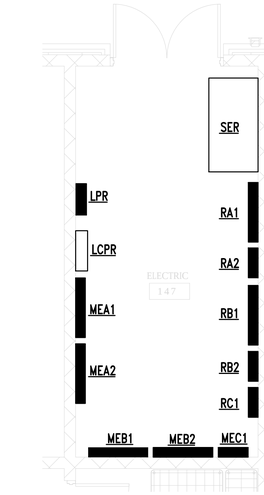

3 RE3.2 — PARTIAL FLOOR PLAN - ELECTRICAL 147
SCALE: 1/4"=1'-0"

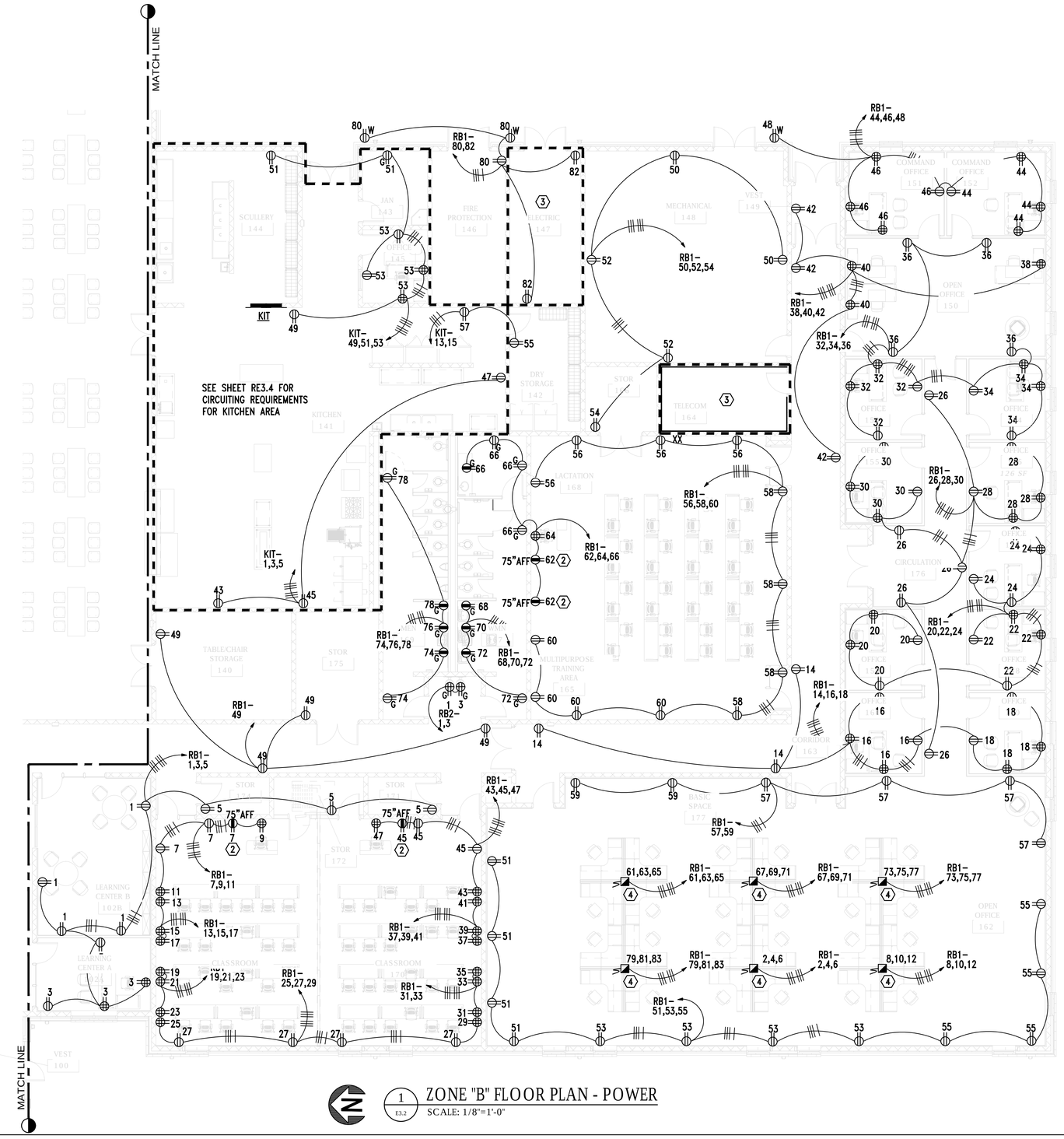

1 E3.2 — ZONE "B" FLOOR PLAN - POWER
SCALE: 1/8"=1'-0"

1/4" = 1'-0
4' 0 4 8 FT.
GRAPHIC SCALE

1/8" = 1'-0
8' 0 8 16 FT
GRAPHIC SCALE

Gunn & Associates, P.C.
Consulting Engineers
3102 Highway 14, Millbrook, AL 36054, Tel: 334.285.1273
1200 Providence Park, Suite 200, Birmingham, AL 35242
GA#22-071

S|S&L ARCHITECTS
Montgomery | Dothan | Auburn | Huntsville | Pensacola
WWW.SSLARCH.COM | 256.285.1063

Rev.	Description	Date

Job Number	21112
Date	NOVEMBER 1, 2024
Drawn By	KRG, JBG
Checked By	JBG

Project Title

HUNTSVILLE READINESS CENTER
5180 MOORE'S MILL ROAD
HUNTSVILLE AL, 35811

Sheet Title
ZONE "B" FLOOR PLAN - POWER

Sheet Number
RE3.2

ALABAMA REGISTERED
No. 20431 PROFESSIONAL
11-01-24
ENGINEER
JOHN BARRY GRAILEE

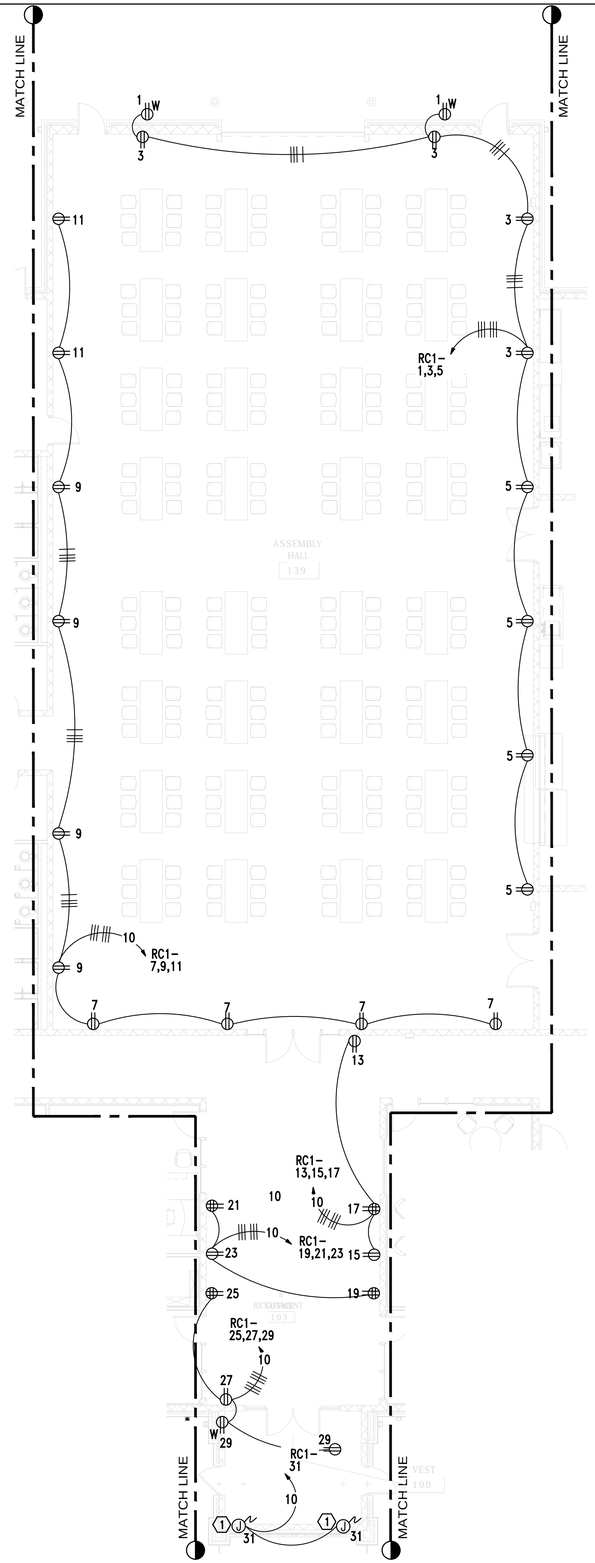

1 E3.3 ZONE "C" FLOOR PLAN - POWER

SCALE: 1/8"=1'-0"

SHEET NOTES:

1. PROVIDE POWER ABOVE ACCESSIBLE CEILING FOR SECURITY/ACCESS CONTROL DOOR.

1/8" = 1'-0

8' 0 8 16 FT

GRAPHIC SCALE

Gunn & Associates, P.C.
Consulting Engineers
3102 Highway 14
Millbrook, AL 36054
Tel: 334.285.1273
1200 Providence Park, Suite 200
Birmingham, AL 35242
GA#22-071

S|S&L ARCHITECTS
Montgomery | Dothan | Auburn | Huntsville | Pensacola
WWW.SSLARCH.COM | 256.285.1063

Rev.	Description	Date

Job Number 21112

Date NOVEMBER 1, 2024

Drawn By KRG, JBG

Checked By JBG

Project Title

HUNTSVILLE READINESS CENTER
5180 MOORE'S MILL ROAD
HUNTSVILLE AL, 35811

Sheet Title
ZONE "C"
FLOOR PLAN - POWER

Sheet Number
RE3.3

ALABAMA REGISTERED
NO. 20431
PROFESSIONAL
ENGINEER
JOHN BARRY GRAVLEE
11-01-24

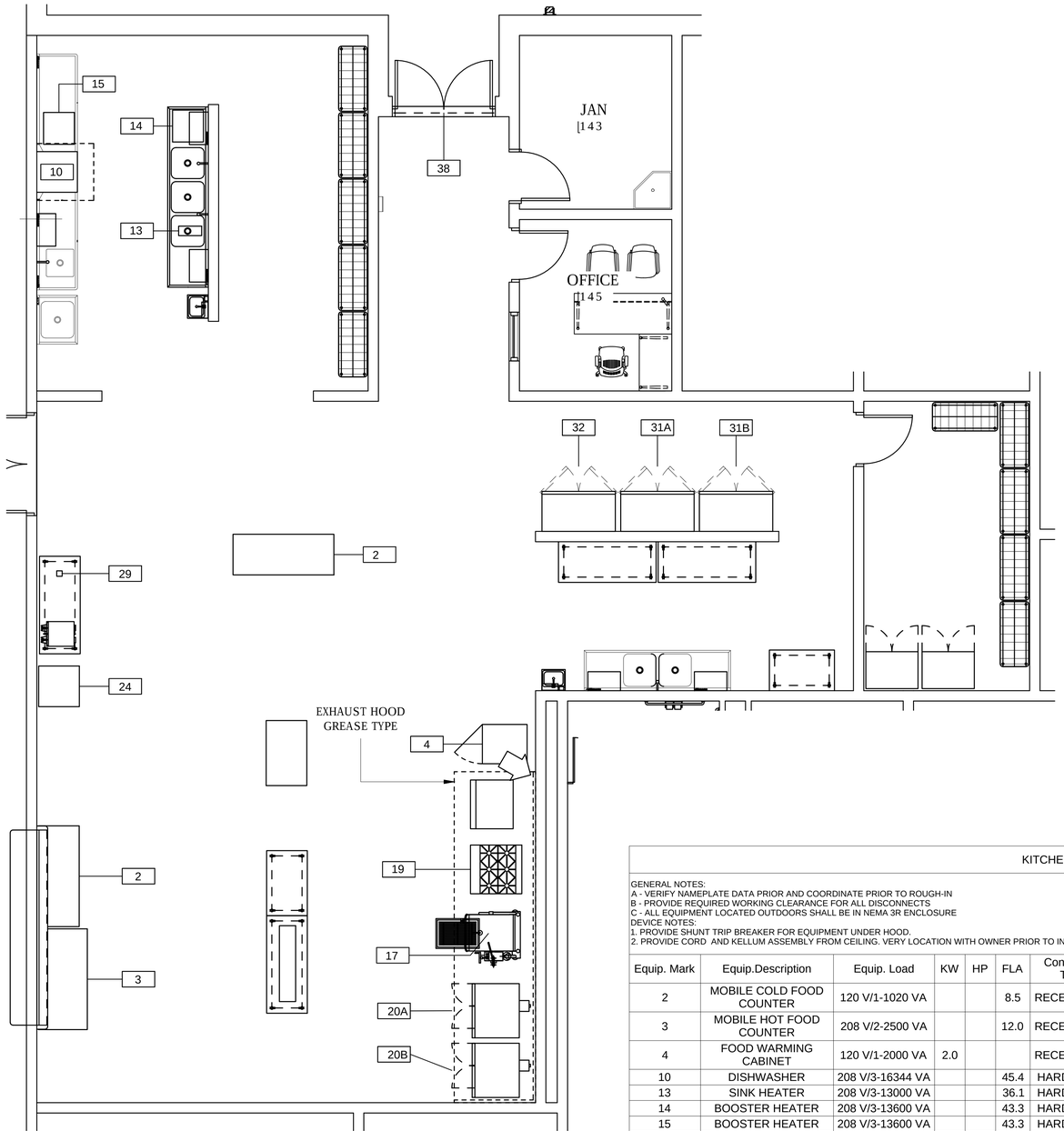

1 E3.4 LARGE SCALE KITCHEN PLAN - POWER

SCALE: 1/4"=1'-0"

PANEL KIT

TYPE: 600 AMP MAIN LUG | AIC: 22,000 AMPERES | MOUNTED: SURFACE | VOLTAGE: 120/208 VOLTS, 3 PHASE, 4 WIRE

CIRCUIT DIRECTORY	(VA) PER PHASE			AMP	POLE	CIRCUIT NUMBER		AMP	POLE	(VA) PER PHASE			CIRCUIT DIRECTORY
	PHASE A	PHASE B	PHASE C							PHASE A	PHASE B	PHASE C	
29 CAN OPENER	180			20	1	1	2	20	1	720			20A CONVECTION OVEN (NOTE 3)
19 GAS RANGE (NOTE 3)		480		20	1	3	4						20A SHUNT
19 SHUNT						5	6	20	1			816	38 AIR CURTAIN
2 COLD FOOD COUNTER	1,020			20	1	7	8	20	1	1,284			32 REACH IN REFIRG
4 WARM FOOD COUNTER		1,600		20	1	9	10	20	1		720		20B CONVECTION OVEN (NOTE 3)
31A REACH-IN FREEZER			1,440	20	1	11	12						20B SHUNT
3 HOT FOOD COUNTER	1,248			20		13	14	40					30 COFFEE BREWER
		1,248			2	15	16		2				
24 ICE MAKER			1,296	20	1	17	18	20	1				SPARE
13 BOOSTER HEATER	12,034			50		19	20	60		3,027			15 SINK HEATER
		12,034				21	22				3,027		
			12,034		3	23	24		3			3,027	
10 DISHWASHER	15,170			60		25	26						BUSSED SPACE
		15,170				27	28						BUSSED SPACE
			15,170		3	29	30						BUSSED SPACE
31B REACH-IN FREEZER	1,440			20	1	31	32						BUSSED SPACE
14 SINK HEATER		14,434		60		33	34						BUSSED SPACE
			14,434			35	36	20	1			1,800	17 TILTING SKILLET (NOTE 3)
	14,434				3	37	38						17 SHUNT
SPARE						39	40	20	1				SPARE
SPARE						41	42	20	1				SPARE
RECEPTACLE	600			20	1	43	44	20		1,272			KSF - R1A
RECEPTACLE		600		20	1	45	46				1,272		
RECEPTACLE			600	20	1	47	48		3			1,272	
RECEPTACLE	600			20	1	49	50	20		1,272			KSF - R1B
RECEPTACLE		600		20	1	51	52				1,272		
RECEPTACLES			1,200	20	1	53	54		3			1,272	
RECEPTACLE	300			20	1	55	56	20		800			KEF - R1B
RECEPTACLE		300		20	1	57	58				800		
SPARE				20	1	59	60		3			800	
KH - R1 (LIGHTS)	500			20	1	61	62	30	1	1,656			KSF - R2
KH - R2 (LIGHTS)		500		20	1	63	64	20	1				SPARE
KFCC - R1 (CONTROLS)			1,000	20	1	65	66	20	1			1,200	KH-R1 & R2 LIGHTS
KFCC - R2 (CONTROLS)	1,000			20	1	67	68	20		800			KEF - R1A
KH - R1 (SUPPRESSION)		800		20	1	69	70				800		
KH - R2 (SUPPRESSION)			800	20	1	71	72		3			800	
BUSSED SPACE						73	74	20	1	1,656			KEF - R2
BUSSED SPACE						75	76	20			1,272		KEF/MAU - R1
BUSSED SPACE						77	78					1,272	
BUSSED SPACE						79	80		3	1,272			
BUSSED SPACE						81	82						BUSSED SPACE
BUSSED SPACE						83	84						BUSSED SPACE
SUB TOTAL (VA)	48,526	47,766	47,974							13,759	9,163	12,259	SUB TOTAL (VA)

TOTAL LOAD PHASE A: 62,285 (VA)
TOTAL LOAD PHASE B: 56,929 (VA)
TOTAL LOAD PHASE C: 60,233 (VA)
TOTAL LOAD: 179,447 (VA) = 498 AMPS

NOTES:
1. PANELBOARD TO BE BOLT-ON TYPE WITH DOOR-IN-DOOR CONSTRUCTION.
2. PROVIDE ARC FAULT LABEL PER DETAIL.
3. PROVIDE SHUNT TRIP BREAKER FOR THIS ITEM TIED TO FIRE ALARM.

KITCHEN EQUIPMENT SCHEDULE

GENERAL NOTES:
A - VERIFY NAMEPLATE DATA PRIOR AND COORDINATE PRIOR TO ROUGH-IN
B - PROVIDE REQUIRED WORKING CLEARANCE FOR ALL DISCONNECTS
C - ALL EQUIPMENT LOCATED OUTDOORS SHALL BE IN NEMA 3R ENCLOSURE
DEVICE NOTES:
1. PROVIDE SHUNT TRIP BREAKER FOR EQUIPMENT UNDER HOOD.
2. PROVIDE CORD AND KELLUM ASSEMBLY FROM CEILING. VERY LOCATION WITH OWNER PRIOR TO INSTALL.

ABBREVIATIONS:
F## - FUSED DISCONNECT WITH SIZE INDICATED (EX. F35 - FUSED AT 35 AMPS)
NF - NOT FUSED
WP - WEATHERPROOF, NEMA 3R
HPS - HORSEPOWER RATED SWITCH WITH PROPERLY SIZED THERMAL UNIT

Equip. Mark	Equip.Description	Equip. Load	KW	HP	FLA	Connection Type	Fuse Required	Feeders Wire & Conduits	Breaker	Panel	Circuit Number	Remarks
2	MOBILE COLD FOOD COUNTER	120 V/1-1020 VA			8.5	RECEPTACLE		2#12 & 1#12 G, 3/4"C	20/1	KIT	7	PROVIDE 5-20R
3	MOBILE HOT FOOD COUNTER	208 V/2-2500 VA			12.0	RECEPTACLE		2#12 & 1#12 G, 3/4"C	20/2	KIT	13,15	PROVIDE 6-20R
4	FOOD WARMING CABINET	120 V/1-2000 VA	2.0			RECEPTACLE		2#12 & 1#12 G, 3/4"C	20/1	KIT	9	PROVIDE 5-20R
10	DISHWASHER	208 V/3-16344 VA			45.4	HARDWIRED		3#6 & 1#10G, 1 1/2" C	60/3	KIT	25,27,29	
13	SINK HEATER	208 V/3-13000 VA			36.1	HARDWIRED		3#6 & 1#10G, 1 1/2" C	50/3	KIT	19,21,23	
14	BOOSTER HEATER	208 V/3-13600 VA			43.3	HARDWIRED		3#6 & 1#10G, 1 1/2" C	60/3	KIT	33,35,37	
15	BOOSTER HEATER	208 V/3-13600 VA			43.3	HARDWIRED		3#6 & 1#10G, 1 1/2" C	60/3	KIT	20,22,24	
17	TILTING SKILLET	120 V/1-1800 VA			15.0	RECEPTACLE		2#12 & 1#12 G, 3/4"C	20/1 SHUNT	KIT	36	NOTE 1
19	GAS OVEN	120 V/1-480 VA			4.0	RECEPTACLE		2#12 & 1#12 G, 3/4"C	20/1 SHUNT	KIT	3	NOTE 1
20a	CONVECTION OVEN	120 V/1-720 VA			6.0	RECEPTACLE		2#12 & 1#12 G, 3/4"C	20/1 SHUNT	KIT	2	NOTE 1
20b	CONVECTION OVEN	120 V/1-720 VA			6.0	RECEPTACLE		2#12 & 1#12 G, 3/4"C	20/1 SHUNT	KIT	10	NOTE 1
24	ICE MAKER	120 V/1-1296 VA			10.8	30/2/1	F	2#12 & 1#12 G, 3/4"C	20/1	KIT	17	
29	CAN OPENER	120 V/1-180 VA			1.5	RECEPTACLE		2#12 & 1#12 G, 3/4"C	20/1	KIT	1	NOTE 2
30	COFFEE URN	208 V/2-6053 VA			29.1	RECEPTACLE		2#8 & 1#10 G, 1"C	40/2	KIT	14,16	NOTE 2
31A	REACH-IN FREEZER	120 V/1-1284 VA			12.0	RECEPTACLE		2#12 & 1#12 G, 3/4"C	20/1	KIT	11	
31B	REACH-IN FREEZER	120 V/1-1284 VA			12.0	RECEPTACLE		2#12 & 1#12 G, 3/4"C	20/1	KIT	31	
32	REACH-IN REFRIGERATOR	120 V/1-1284 VA			10.7	RECEPTACLE		2#12 & 1#12 G, 3/4"C	20/1	KIT	8	
38	AIR CURTAIN	120 V/1-820 VA			6.8	TS		2#12 & 1#12 G, 3/4"C	20/1	KIT	6	LOCATE ABOVE DOOR

Gunn & Associates, P.C.
Consulting Engineers
3102 Highway 14
Millbrook, AL 36054
Tel: 334.285.1273
1200 Providence Park, Suite 200
Birmingham, AL 35242
GA#22-071

SS&L ARCHITECTS
Montgomery | Dothan | Auburn | Huntsville | Pensacola
WWW.SSLARCH.COM | 256.285.1063

Rev.	Description	Date

Job Number: 21112
Date: NOVEMBER 1, 2024
Drawn By: KRG, JBG
Checked By: JBG
Project Title:

HUNTSVILLE READINESS CENTER
5180 MOORE'S MILL ROAD
HUNTSVILLE AL, 35811

Sheet Title: LARGE SCALE KITCHEN PLAN - POWER AND SCHEDULES

Sheet Number: RE3.4

ALABAMA REGISTERED
NO. 20431
PROFESSIONAL
ENGINEER
JOHN BARRY GRAY, P.E.
11-01-24

GENERAL NOTES:

1. SEE SHEETS RE3.8 & RE3.9 FOR MECHANICAL EQUIPMENT FEEDER, PANEL AND DISCONNECT REQUIREMENTS.

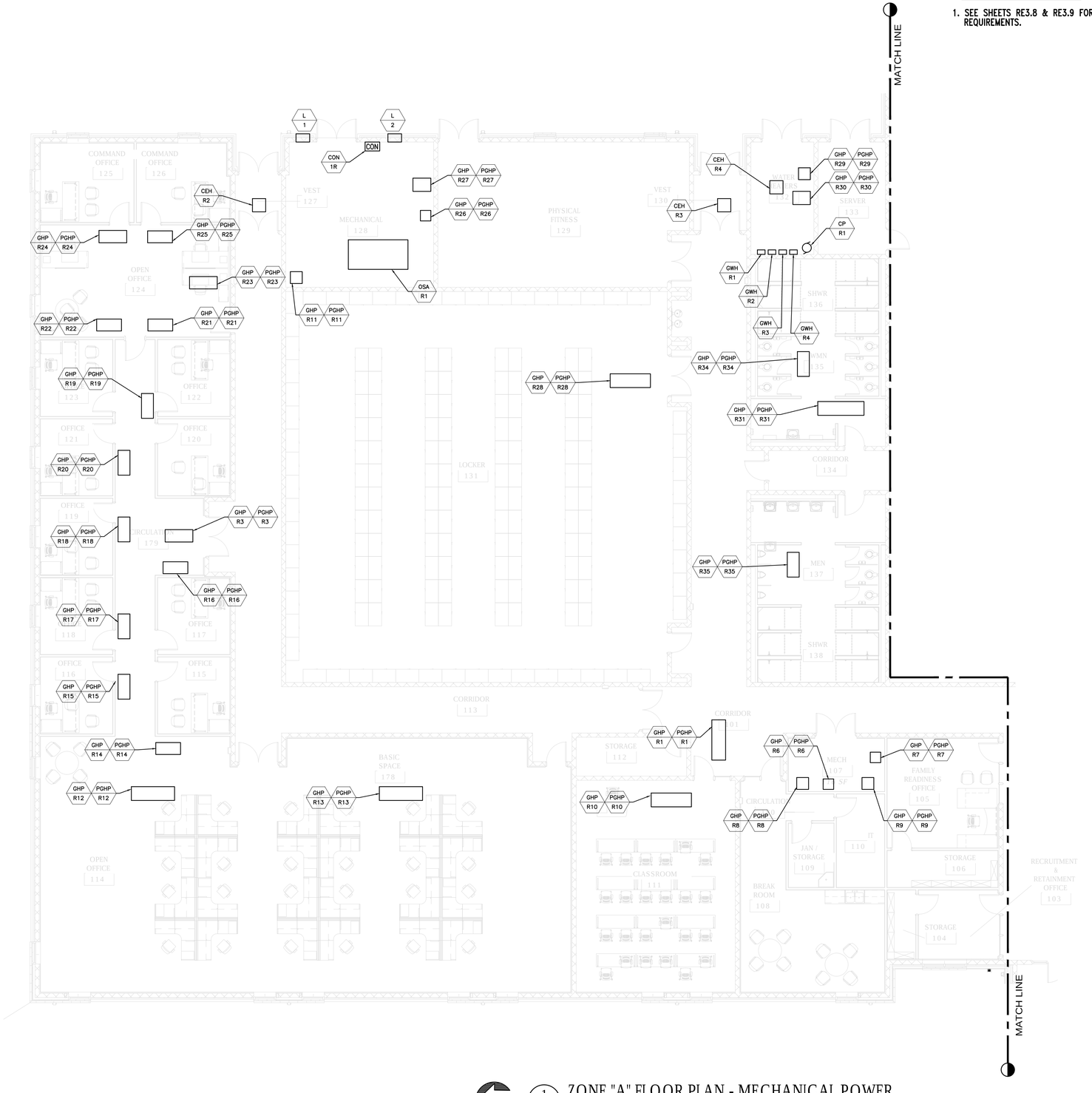

1/8" = 1'-0

8' 0 8 16 FT

GRAPHIC SCALE

1 RE3.5 ZONE "A" FLOOR PLAN - MECHANICAL POWER

SCALE: 1/8"=1'-0"

Gunn & Associates, P.C.
Consulting Engineers
3102 Highway 14
Millbrook, AL 36054
Tel: 334.285.1273
1200 Providence Park, Suite 200
Birmingham, AL 35242
GA#22-071

S|S&L ARCHITECTS
Montgomery | Dothan | Auburn | Huntsville | Pensacola
WWW.SSLARCH.COM | 256.285.1063

Rev.	Description	Date

Job Number 21112

Date NOVEMBER 1, 2024

Drawn By KRG, JBG

Checked By JBG

Project Title

HUNTSVILLE READINESS CENTER
5180 MOORE'S MILL ROAD
HUNTSVILLE AL, 35811

Sheet Title
ZONE "A"
FLOOR PLAN -
MECHANICAL
POWER

Sheet Number
RE3.5

ALABAMA REGISTERED
NO. 20431 PROFESSIONAL
11-01-24
ENGINEER
JOHN BARRY GRAYLEE

GENERAL NOTES:

1. SEE SHEETS RE3.8 & RE3.9 FOR MECHANICAL EQUIPMENT FEEDER, PANEL AND DISCONNECT REQUIREMENTS.

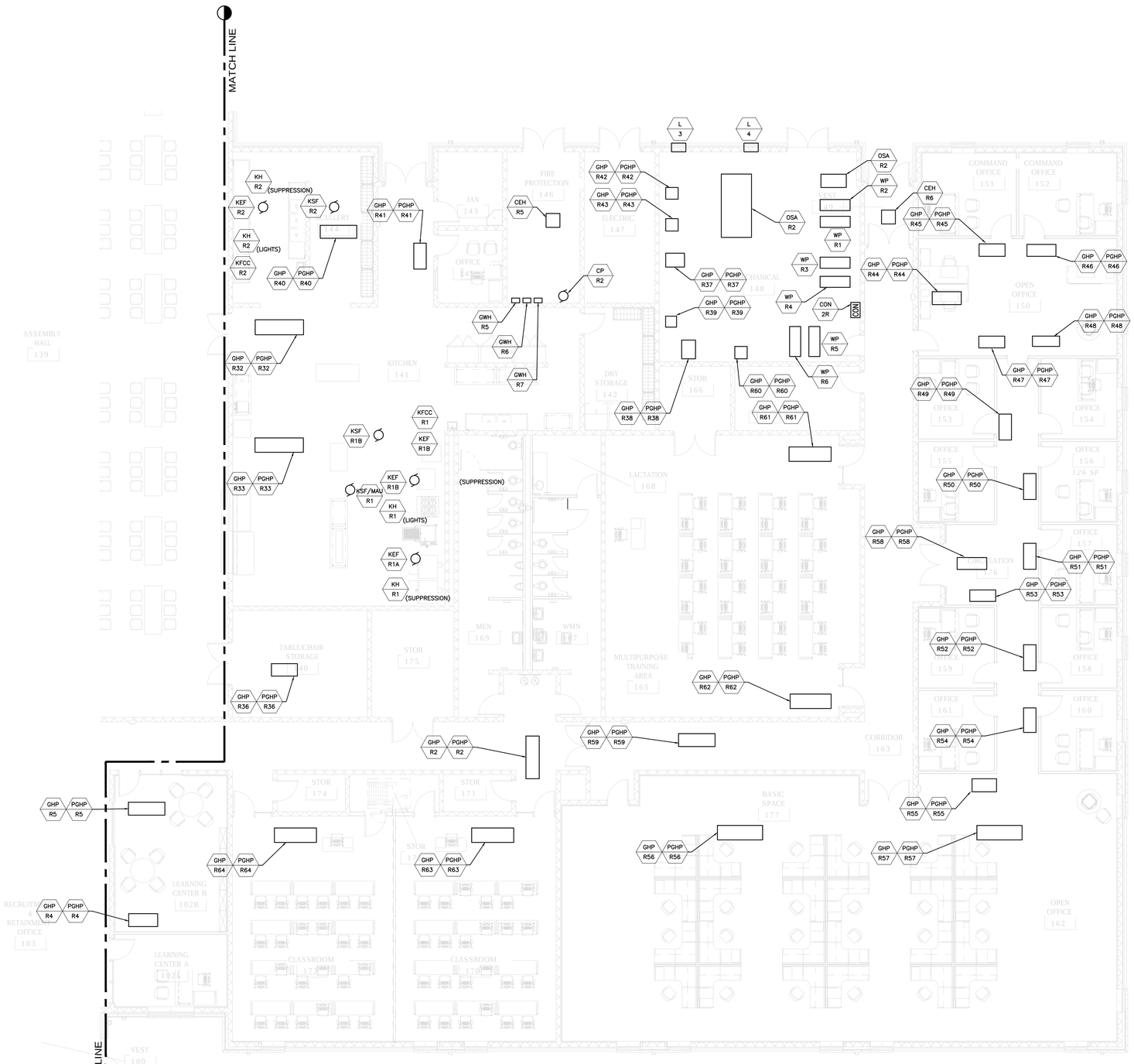

1 RE3.6 ZONE "B" FLOOR PLAN - MECHANICAL POWER

SCALE: 1/8"=1'-0"

1/8" = 1'-0

8' 0 8 16 FT

GRAPHIC SCALE

Gunn & Associates, P.C.
Consulting Engineers
3102 Highway 14
Millbrook, AL 36054
Tel: 334.285.1273
1200 Providence Park, Suite 200
Birmingham, AL 35242
GA#22-071

SS&L ARCHITECTS
Montgomery | Dothan | Auburn | Huntsville | Pensacola
WWW.SSLARCH.COM | 256.285.1063

Rev.	Description	Date

Job Number 21112

Date NOVEMBER 1, 2024

Drawn By KRG, JBG

Checked By JBG

Project Title

HUNTSVILLE READINESS CENTER
5180 MOORE'S MILL ROAD
HUNTSVILLE AL, 35811

Sheet Title
ZONE "B" FLOOR PLAN - MECHANICAL POWER

Sheet Number
RE3.6

ALABAMA REGISTERED No. 20431 PROFESSIONAL ENGINEER JOHN BARRY GRAVLEE
11-01-24

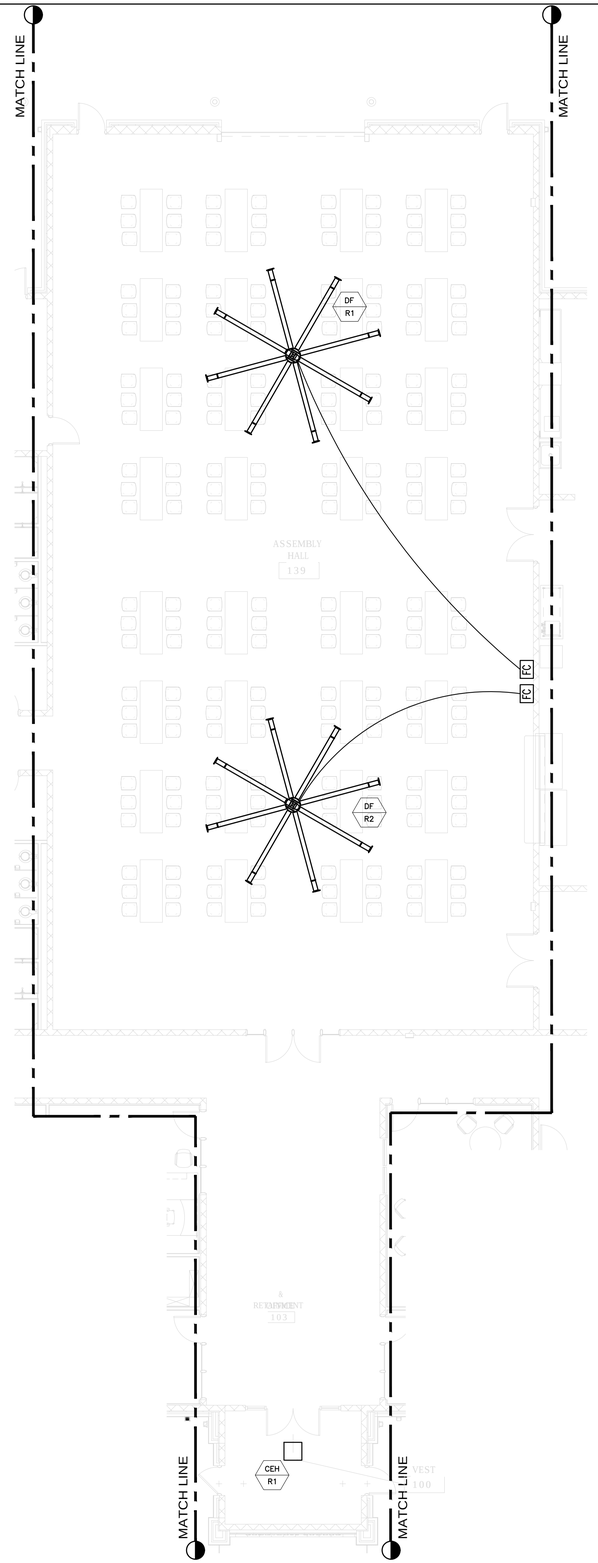

GENERAL NOTES:

1. SEE SHEETS RE3.8 & RE3.9 FOR MECHANICAL EQUIPMENT FEEDER, PANEL AND DISCONNECT REQUIREMENTS.

1/8" = 1'-0

8' 0 8 16 FT

GRAPHIC SCALE

1 RE3.7 ZONE "C" FLOOR PLAN - MECHANICAL POWER

SCALE: 1/8"=1'-0"

S|S&L ARCHITECTS
Montgomery | Dothan | Auburn | Huntsville | Pensacola
WWW.SSLARCH.COM | 256.285.1063

Rev.	Description	Date

Job Number 21112

Date NOVEMBER 1, 2024

Drawn By KRG, JBG

Checked By JBG

Project Title

HUNTSVILLE READINESS CENTER
5180 MOORE'S MILL ROAD
HUNTSVILLE AL, 35811

Sheet Title
ZONE "C" FLOOR PLAN - MECHANICAL POWER

Sheet Number
RE3.7

Gunn & Associates, P.C.
Consulting Engineers
3102 Highway 14
Millbrook, AL 36054
Tel: 334.285.1273
1200 Providence Park, Suite 200
Birmingham, AL 35242
GA#22-071

ALABAMA REGISTERED
No. 20431
PROFESSIONAL
11-01-24
ENGINEER
JOHN BARRY GAILLEE

READINESS CENTER GENERAL EQUIPMENT SCHEDULE

EQUIPMENT MARK:	EQUIPMENT DESCRIPTION:	VOLTAGE/PHASE:	ELECTRICAL CHARACTERISTICS: HP	KW	AMPS	DISCONNECT:	FUSE:	HOMERUN:	FEEDER:
GHP - R1	GEOTHERMAL HEAT PUMP	208V/3PH	---	---	17.5	30/3/3R	F	MEA1 - 1,3,5	3#10 & 1#10GRD - 3/4"C
PGHP - 1	GEOTHERMAL HP PUMP	120V/1PH	1/8	---	---	TS	---	MEA2 - 28	2#10 & 1#10GRD - 3/4"C
GHP - R2	GEOTHERMAL HEAT PUMP	208V/3PH	---	---	17.5	30/3/3R	F	MEB1 - 1,3,5	3#10 & 1#10GRD - 3/4"C
PGHP - 2	GEOTHERMAL HP PUMP	120V/1PH	1/8	---	---	TS	---	MEB2 - 12	2#10 & 1#10GRD - 3/4"C
GHP - R3	GEOTHERMAL HEAT PUMP	208V/1PH	---	---	12	30/2/3R	F	MEA1 - 13, 15	2#10 & 1#10GRD - 3/4"C
PGHP - 3	GEOTHERMAL HP PUMP	120V/1PH	1/8	---	---	TS	---	MEA2 - 34	2#10 & 1#10GRD - 3/4"C
GHP - R4	GEOTHERMAL HEAT PUMP	208V/1PH	---	---	9.9	30/2/3R	F	MEB1 - 17,19	2#10 & 1#10GRD - 3/4"C
PGHP -4	GEOTHERMAL HP PUMP	120V/1PH	1/8	---	---	TS	---	MEB2 - 10	2#10 & 1#10GRD - 3/4"C
GHP - R5	GEOTHERMAL HEAT PUMP	208V/3PH	---	---	12.9	30/3/3R	F	MEB1 - 21,23,25	3#10 & 1#10GRD - 3/4"C
PGHP -5	GEOTHERMAL HP PUMP	120V/1PH	1/8	---	---	TS	---	MEB2 - 10	2#10 & 1#10GRD - 3/4"C
GHP - R6	GEOTHERMAL HEAT PUMP	208V/1PH	---	---	7.9	30/2/3R	F	MEA1 - 27,29	2#10 & 1#10GRD - 3/4"C
PGHP -6	GEOTHERMAL HP PUMP	120V/1PH	1/8	---	---	TS	---	MEA2 - 30	2#10 & 1#10GRD - 3/4"C
GHP - R7	GEOTHERMAL HEAT PUMP	208V/1PH	---	---	9.9	30/2/3R	F	MEA1 - 31,33	2#10 & 1#10GRD - 3/4"C
PGHP -7	GEOTHERMAL HP PUMP	120V/1PH	1/8	---	---	TS	---	MEA2 - 30	2#10 & 1#10GRD - 3/4"C
GHP - R8	GEOTHERMAL HEAT PUMP	208V/3PH	---	---	12.9	30/3/3R	F	MEA1 - 35,37,39	3#10 & 1#10GRD - 3/4"C
PGHP -8	GEOTHERMAL HP PUMP	120V/1PH	1/8	---	---	TS	---	MEA2 - 30	2#10 & 1#10GRD - 3/4"C
GHP - R9	GEOTHERMAL HEAT PUMP	208V/1PH	---	---	12	30/2/3R	F	MEA1 - 43,45,47	2#10 & 1#10GRD - 3/4"C
PGHP - 9	GEOTHERMAL HP PUMP	120V/1PH	1/8	---	---	TS	---	MEA2 - 30	2#10 & 1#10GRD - 3/4"C
GHP - R10	GEOTHERMAL HEAT PUMP	208V/3PH	---	---	17.5	30/3/3R	F	MEA1 - 49,51,53	3#10 & 1#10GRD - 3/4"C
PGHP - 10	GEOTHERMAL HP PUMP	120V/1PH	1/8	---	---	TS	---	MEA2 - 30	2#10 & 1#10GRD - 3/4"C
GHP - R11	GEOTHERMAL HEAT PUMP	208V/3PH	---	---	12.9	30/3/3R	F	MEA1 - 55,57,59	3#10 & 1#10GRD - 3/4"C
PGHP - 11	GEOTHERMAL HP PUMP	120V/1PH	1/8	---	---	TS	---	MEA2 - 38	2#10 & 1#10GRD - 3/4"C
GHP - R12	GEOTHERMAL HEAT PUMP	208V/3PH	---	---	24.2	60/3/3R	F	MEA1 - 61,63,65	2#10 & 1#10GRD - 3/4"C
PGHP - 12	GEOTHERMAL HP PUMP	120V/1PH	1/8	---	---	TS	---	MEA2 - 32	2#10 & 1#10GRD - 3/4"C
GHP - R13	GEOTHERMAL HEAT PUMP	208V/3PH	---	---	24.2	60/3/3R	F	MEA1 - 67,69,71	2#10 & 1#10GRD - 3/4"C
PGHP -13	GEOTHERMAL HP PUMP	120V/1PH	1/8	---	---	TS	---	MEA2 - 32	2#10 & 1#10GRD - 3/4"C
GHP - R14	GEOTHERMAL HEAT PUMP	208V/1PH	---	---	4.6	30/2/3R	F	MEA1 - 73,75	2#10 & 1#10GRD - 3/4"C
PGHP - 14	GEOTHERMAL HP PUMP	120V/1PH	1/8	---	---	TS	---	MEA2 - 32	2#10 & 1#10GRD - 3/4"C
GHP - R15	GEOTHERMAL HEAT PUMP	208V/1PH	---	---	4.6	30/2/3R	F	MEA1 - 77,79	2#10 & 1#10GRD - 3/4"C
PGHP - 15	GEOTHERMAL HP PUMP	120V/1PH	1/8	---	---	TS	---	MEA2 - 32	2#10 & 1#10GRD - 3/4"C
GHP - R16	GEOTHERMAL HEAT PUMP	208V/1PH	---	---	4.6	30/2/3R	F	MEA1 - 81,83	2#10 & 1#10GRD - 3/4"C
PGHP - 16	GEOTHERMAL HP PUMP	120V/1PH	1/8	---	---	TS	---	MEA2 - 34	2#10 & 1#10GRD - 3/4"C
GHP - R17	GEOTHERMAL HEAT PUMP	208V/1PH	---	---	4.6	30/2/3R	F	MEA2 - 13,15	2#10 & 1#10GRD - 3/4"C
PGHP - 17	GEOTHERMAL HP PUMP	120V/1PH	1/8	---	---	TS	---	MEA2 - 32	2#10 & 1#10GRD - 3/4"C
GHP - R18	GEOTHERMAL HEAT PUMP	208V/1PH	---	---	4.6	30/2/3R	F	MEA1 - 2,4	2#10 & 1#10GRD - 3/4"C
PGHP - 18	GEOTHERMAL HP PUMP	120V/1PH	1/8	---	---	TS	---	MEA2 - 34	2#10 & 1#10GRD - 3/4"C
GHP - R19	GEOTHERMAL HEAT PUMP	208V/1PH	---	---	4.6	30/2/3R	F	MEA1 - 6,8	2#10 & 1#10GRD - 3/4"C
PGHP - 19	GEOTHERMAL HP PUMP	120V/1PH	1/8	---	---	TS	---	MEA2 - 34	2#10 & 1#10GRD - 3/4"C
GHP - R20	GEOTHERMAL HEAT PUMP	208V/1PH	---	---	4.6	30/2/3R	F	MEA1 - 10,12	2#10 & 1#10GRD - 3/4"C
PGHP - 20	GEOTHERMAL HP PUMP	120V/1PH	1/8	---	---	TS	---	MEA2 - 34	2#10 & 1#10GRD - 3/4"C
GHP - R21	GEOTHERMAL HEAT PUMP	208V/1PH	---	---	4.6	30/2/3R	F	MEA1 - 14,16	2#10 & 1#10GRD - 3/4"C
PGHP - 21	GEOTHERMAL HP PUMP	120V/1PH	1/8	---	---	TS	---	MEA2 - 36	2#10 & 1#10GRD - 3/4"C
GHP - R22	GEOTHERMAL HEAT PUMP	208V/1PH	---	---	4.6	30/2/3R	F	MEA1 - 18,20	2#10 & 1#10GRD - 3/4"C
PGHP - 22	GEOTHERMAL HP PUMP	120V/1PH	1/8	---	---	TS	---	MEA2 - 36	2#10 & 1#10GRD - 3/4"C
GHP - R23	GEOTHERMAL HEAT PUMP	208V/1PH	---	---	12	30/2/3R	F	MEA1 - 22,24	2#10 & 1#10GRD - 3/4"C
PGHP - 23	GEOTHERMAL HP PUMP	120V/1PH	1/8	---	---	TS	---	MEA2 - 36	2#10 & 1#10GRD - 3/4"C
GHP - R24	GEOTHERMAL HEAT PUMP	208V/1PH	---	---	9.9	30/2/3R	F	MEA1 - 26,28	2#10 & 1#10GRD - 3/4"C
PGHP - 24	GEOTHERMAL HP PUMP	120V/1PH	1/8	---	---	ST	---	MEA2 - 36	2#10 & 1#10GRD - 3/4"C
GHP - R25	GEOTHERMAL HEAT PUMP	208V/1PH	---	---	7.9	30/2/3R	F	MEA1 - 30,32	2#10 & 1#10GRD - 3/4"C
PGHP - 25	GEOTHERMAL HP PUMP	120V/1PH	1/8	---	---	ST	---	MEA2 - 36	2#10 & 1#10GRD - 3/4"C
GHP - R26	GEOTHERMAL HEAT PUMP	208V/1PH	---	---	9.9	30/2/3R	F	MEA1 - 34,36	2#10 & 1#10GRD - 3/4"C
PGHP - 26	GEOTHERMAL HP PUMP	120V/1PH	1/8	---	---	TS	---	MEA2 - 38	2#10 & 1#10GRD - 3/4"C
GHP - R27	GEOTHERMAL HEAT PUMP	208V/3PH	---	---	28.6	60/3/3R	F	MEA1 - 44,46,48	3#8 & 1#10GRD - 1"C
PGHP - 27	GEOTHERMAL HP PUMP	120V/1PH	1/6	---	---	TS	---	MEA2 - 38	2#10 & 1#10GRD - 3/4"C
GHP - R28	GEOTHERMAL HEAT PUMP	208V/3PH	---	---	17.5	30/3/3R	F	MEA1 - 50,52,54	3#10 & 1#10GRD - 3/4"C
PGHP - 28	GEOTHERMAL HP PUMP	120V/1PH	1/8	---	---	TS	---	MEA2 - 26	2#10 & 1#10GRD - 3/4"C
GHP - R29	GEOTHERMAL HEAT PUMP	208V/1PH	---	---	12	30/2/3R	F	MEB1 - 19,21	2#10 & 1#10GRD - 3/4"C
PGHP - 29	GEOTHERMAL HP PUMP	120V/1PH	1/8	---	---	TS	---	MEB2 - 20	2#10 & 1#10GRD - 3/4"C
GHP - R30	GEOTHERMAL HEAT PUMP	208V/3PH	---	---	28.6	60/3/3R	F	MEA1 - 60,62,64	3#8 & 1#10GRD - 1"C
PGHP - 30	GEOTHERMAL HP PUMP	120V/1PH	1/6	---	---	TS	---	MEA2 - 26	2#10 & 1#10GRD - 3/4"C
GHP - R31	GEOTHERMAL HEAT PUMP	208V/3PH	---	---	28.6	60/3/3R	F	MEB1 - 66,68,70	3#8 & 1#10GRD - 1"C
PGHP - 31	GEOTHERMAL HP PUMP	120V/1PH	1/6	---	---	TS	---	MEB1 -	2#10 & 1#10GRD - 3/4"C
GHP - R32	GEOTHERMAL HEAT PUMP	208V/3PH	---	---	28.6	60/3/3R	F	MEA1 - 72,74,76	3#8 & 1#10GRD - 1"C
PGHP - 32	GEOTHERMAL HP PUMP	120V/1PH	1/6	---	---	TS	---	MEA2 - 26	2#10 & 1#10GRD - 3/4"C
GHP - R33	GEOTHERMAL HEAT PUMP	208V/3PH	---	---	28.6	60/3/3R	F	MEB1 - 78,80,82	3#8 & 1#10GRD - 1"C
PGHP - 33	GEOTHERMAL HP PUMP	120V/1PH	1/6	---	---	TS	---	MEB2 - 24	2#10 & 1#10GRD - 3/4"C
GHP - R34	GEOTHERMAL HEAT PUMP	208V/1PH	---	---	4.6	30/2/3R	F	MEA2 - 1,3	2#10 & 1#10GRD - 3/4"C
PGHP - 34	GEOTHERMAL HP PUMP	120V/1PH	1/8	---	---	TS	---	MEA2 - 26	2#10 & 1#10GRD - 3/4"C
GHP - R35	GEOTHERMAL HEAT PUMP	208V/1PH	---	---	4.6	30/2/3R	F	MEA2 - 5,7	2#10 & 1#10GRD - 3/4"C
PGHP 35	GEOTHERMAL HP PUMP	120V/1PH	1/8	---	---	TS	---	MEA2 - 28	2#10 & 1#10GRD - 3/4"C
GHP - R36	GEOTHERMAL HEAT PUMP	208V/1PH	---	---	4.6	30/2/3R	F	MEB1 - 29,31	2#10 & 1#10GRD - 3/4"C
PGHP - 36	GEOTHERMAL HP PUMP	120V/1PH	1/8	---	---	TS	---	MEB2 - 10	2#10 & 1#10GRD - 3/4"C
GHP - R37	GEOTHERMAL HEAT PUMP	208V/3PH	---	---	28.6	60/3/3R	F	MEB1 - 33,35,37	3#8 & 1#10GRD - 1"C
PGHP - 37	GEOTHERMAL HP PUMP	120V/1PH	1/6	---	---	TS	---	MEB2 - 22	2#10 & 1#10GRD - 3/4"C
GHP - R38	GEOTHERMAL HEAT PUMP	208V/3PH	---	---	28.6	60/3/3R	F	MEB1 - 49,51,53	3#8 & 1#10GRD - 1"C
PGHP - 38	GEOTHERMAL HP PUMP	120V/1PH	1/6	---	---	TS	---	MEB2 - 22	2#10 & 1#10GRD - 3/4"C
			---	---	---	---	---	---	
			---	---	---	---	---	---	

NOTES:
1. COORDINATE WITH MANUFACTURER'S CUTSHEETS OR NAMEPLATE DATA AND ADJUST OVERCURRENT PROTECTION AS NEEDED TO PROTECT EQUIPMENT PER MANUFACTURER'S RECOMMENDATIONS AND TO COMPLY WITH NEC AND ALL LOCAL CODES. COORDINATION SHALL BE DONE PRIOR TO BIDS AND ACCOUNTED FOR IN THE CONTRACTOR'S BID PRICE.
2. ALL DISCONNECTS SHALL BE HEAVY DUTY TYPE.
3. ALL FUSES SHALL BE SIZED PER NAMEPLATE DATA.
4. "NF" - NON-FUSED
5. "F" - FUSED
6. "TS" MANUAL MOTOR STARTER WITH THERMAL OVERLOAD ("W" - WEATHERPROOF) ("30-AMP" - 30-AMP RATED)
7. PROVIDE INTERCONNECTING RELAY SUCH THAT FAN IS CONTROLLED BY LIGHTING.
8. "WP" - WEATHERPROOF ENCLOSURE.
9. CONTRACTOR SHALL COORDINATE EXACT REQUIREMENTS AND LOCATIONS FOR ALL CIRCULATING PUMPS AND TIME CLOCKS WITH MECHANICAL CONTRACTOR PRIOR TO ROUGH-IN.
10. ROUTE ALL CIRCUITING FOR SHOWER CUTOFF VALVES THROUGH JAIL CONTROL SYSTEM. SEE JAIL CONTROL DRAWINGS.

READINESS CENTER GENERAL EQUIPMENT SCHEDULE (CONT'D)

EQUIPMENT MARK:	EQUIPMENT DESCRIPTION:	VOLTAGE/PHASE:	ELECTRICAL CHARACTERISTICS: HP	KW	AMPS	DISCONNECT:	FUSE:	HOMERUN:	FEEDER:
GHP - R39	GEOTHERMAL HEAT PUMP	208V/1PH	---	---	4.5	30/2/1	F	MEB1 - 55,57	2#10 & 1#10GRD - 3/4"C
PGHP - 39	GEOTHERMAL HP PUMP	120V/1PH	1/8	---	---	TS	---	MEB2 - 22	2#10 & 1#10GRD - 3/4"C
GHP - R40	GEOTHERMAL HEAT PUMP	208V/3PH	---	---	16.6	30/3/1	F	MEB2 - 59,61,63	3#10 & 1#10GRD - 3/4"C
PGHP - 40	GEOTHERMAL HP PUMP	120V/1PH	1/8	---	---	TS	---	MEB2 - 24	2#10 & 1#10GRD - 3/4"C
GHP - R41	GEOTHERMAL HEAT PUMP	208V/1PH	---	---	4.6	30/2/1	F	MEB1 - 65,67	2#10 & 1#10GRD - 3/4"C
PGHP - 41	GEOTHERMAL HP PUMP	120V/1PH	1/8	---	---	TS	---	MEB2 - 24	2#10 & 1#10GRD - 3/4"C
GHP - R42	GEOTHERMAL HEAT PUMP	208V/1PH	---	---	9.9	30/2/1	F	MEB1 - 69,71	2#10 & 1#10GRD - 3/4"C
PGHP - 42	GEOTHERMAL HP PUMP	120V/1PH	1/8	---	---	TS	---	MEB2 - 22	2#10 & 1#10GRD - 3/4"C
GHP - R43	GEOTHERMAL HEAT PUMP	208V/3PH	---	---	12.9	30/3/1	F	MEB1 - 73,75,77	3#10 & 1#10GRD - 3/4"C
PGHP - 43	GEOTHERMAL HP PUMP	120V/1PH	1/8	---	---	TS	---	MEB2 - 22	2#10 & 1#10GRD - 3/4"C
GHP - R44	GEOTHERMAL HEAT PUMP	208V/3PH	---	---	12.9	30/3/1	F	MEB1 - 79,81,83	3#10 & 1#10GRD - 3/4"C
PGHP - 44	GEOTHERMAL HP PUMP	120V/1PH	1/8	---	---	TS	---	MEB2 - 20	2#10 & 1#10GRD - 3/4"C
GHP - R45	GEOTHERMAL HEAT PUMP	208V/1PH	---	---	7.9	30/2/1	F	MEB1 - 2,4	2#10 & 1#10GRD - 3/4"C
PGHP - 45	GEOTHERMAL HP PUMP	120V/1PH	1/8	---	---	TS	---	MEB1 -	2#10 & 1#10GRD - 3/4"C
GHP - R46	GEOTHERMAL HEAT PUMP	208V/1PH	---	---	9.9	30/2/1	F	MEB1 - 6,8	2#10 & 1#10GRD - 3/4"C
PGHP - 46	GEOTHERMAL HP PUMP	120V/1PH	1/8	---	---	TS	---	MEB2 - 20	2#10 & 1#10GRD - 3/4"C
GHP - R47	GEOTHERMAL HEAT PUMP	208V/1PH	---	---	4.6	30/2/1	F	MEB1 - 12,14	2#10 & 1#10GRD - 3/4"C
PGHP - 47	GEOTHERMAL HP PUMP	120V/1PH	1/8	---	---	TS	---	MEB2 - 18	2#10 & 1#10GRD - 3/4"C
GHP - R48	GEOTHERMAL HEAT PUMP	208V/1PH	---	---	4.6	30/2/1	F	MEB1 - 16,18	2#10 & 1#10GRD - 3/4"C
PGHP - 48	GEOTHERMAL HP PUMP	120V/1PH	1/8	---	---	TS	---	MEB2 - 18	2#10 & 1#10GRD - 3/4"C
GHP - R49	GEOTHERMAL HEAT PUMP	208V/1PH	---	---	4.6	30/2/1	F	MEB1 - 20,22	2#10 & 1#10GRD - 3/4"C
PGHP - 49	GEOTHERMAL HP PUMP	120V/1PH	1/8	---	---	TS	---	MEB2 - 18	2#10 & 1#10GRD - 3/4"C
GHP - R50	GEOTHERMAL HEAT PUMP	208V/1PH	---	---	4.6	30/2/1	F	MEB1 - 24,26	2#10 & 1#10GRD - 3/4"C
PGHP - 50	GEOTHERMAL HP PUMP	120V/1PH	1/8	---	---	TS	---	MEB2 - 18	2#10 & 1#10GRD - 3/4"C
GHP - R51	GEOTHERMAL HEAT PUMP	208V/1PH	---	---	4.6	30/2/1	F	MEB1 - 28,30	2#10 & 1#10GRD - 3/4"C
PGHP - 51	GEOTHERMAL HP PUMP	120V/1PH	1/8	---	---	TS	---	MEB2 - 16	2#10 & 1#10GRD - 3/4"C
GHP - R52	GEOTHERMAL HEAT PUMP	208V/1PH	---	---	4.6	30/2/1	F	MEB1 - 32,34	2#10 & 1#10GRD - 3/4"C
PGHP - 52	GEOTHERMAL HP PUMP	120V/1PH	1/8	---	---	TS	---	MEB2 - 16	2#10 & 1#10GRD - 3/4"C
GHP - R53	GEOTHERMAL HEAT PUMP	208V/1PH	---	---	4.6	30/2/1	F	MEB1 - 36,38	2#10 & 1#10GRD - 3/4"C
PGHP - 53	GEOTHERMAL HP PUMP	120V/1PH	1/8	---	---	TS	---	MEB2 - 16	2#10 & 1#10GRD - 3/4"C
GHP - R54	GEOTHERMAL HEAT PUMP	208V/1PH	---	---	4.6	30/2/1	F	MEB1 - 40,42	2#10 & 1#10GRD - 3/4"C
PGHP - 54	GEOTHERMAL HP PUMP	120V/1PH	1/8	---	---	TS	---	MEB2 - 16	2#10 & 1#10GRD - 3/4"C
GHP - R55	GEOTHERMAL HEAT PUMP	208V/1PH	---	---	4.6	30/2/1	F	MEB1 - 44,46	2#10 & 1#10GRD - 3/4"C
PGHP - 55	GEOTHERMAL HP PUMP	120V/1PH	1/8	---	---	TS	---	MEB2 - 16	2#10 & 1#10GRD - 3/4"C
GHP - R56	GEOTHERMAL HEAT PUMP	208V/3PH	---	---	24.2	60/3/1	F	MEB1 - 48,50,52	3#8 & 1#10GRD - 1"C
PGHP - 56	GEOTHERMAL HP PUMP	120V/1PH	1/8	---	---	TS	---	MEB2 - 12	2#10 & 1#10GRD - 3/4"C
GHP - R57	GEOTHERMAL HEAT PUMP	208V/3PH	---	---	24.2	60/3/1	F	MEB1 - 54,56,58	3#8 & 1#10GRD - 1"C
PGHP - 57	GEOTHERMAL HP PUMP	120V/1PH	1/8	---	---	TS	---	MEB2 - 12	2#10 & 1#10GRD - 3/4"C
GHP - R58	GEOTHERMAL HEAT PUMP	208V/1PH	---	---	12	30/2/1	F	MEB1 - 60,62	2#10 & 1#10GRD - 3/4"C
PGHP - 58	GEOTHERMAL HP PUMP	120V/1PH	1/8	---	---	TS	---	MEB2 - 18	2#10 & 1#10GRD - 3/4"C
GHP - R59	GEOTHERMAL HEAT PUMP	208V/3PH	---	---	12.9	30/3/1	F	MEB1 - 64,66,68	3#10 & 1#10GRD - 3/4"C
PGHP - 59	GEOTHERMAL HP PUMP	120V/1PH	1/8	---	---	TS	---	MEB2 - 12	2#10 & 1#10GRD - 3/4"C
GHP - R60	GEOTHERMAL HEAT PUMP	208V/1PH	---	---	12	30/2/1	F	MEB1 - 70,72	2#10 & 1#10GRD - 3/4"C
PGHP - 60	GEOTHERMAL HP PUMP	120V/1PH	1/8	---	---	TS	---	MEB2 - 20	2#10 & 1#10GRD - 3/4"C
GHP - R61	GEOTHERMAL HEAT PUMP	208V/3PH	---	---	17.5	30/3/1	F	MEB1 - 74,76,78	3#10 & 1#10GRD - 3/4"C
PGHP - 61	GEOTHERMAL HP PUMP	120V/1PH	1/8	---	---	TS	---	MEB2 - 20	2#10 & 1#10GRD - 3/4"C
GHP - R62	GEOTHERMAL HEAT PUMP	208V/3PH	---	---	17.5	30/3/1	F	MEB1 - 80,82,84	3#10 & 1#10GRD - 3/4"C
PGHP - 62	GEOTHERMAL HP PUMP	120V/1PH	1/8	---	---	TS	---	MEB2 - 12	2#10 & 1#10GRD - 3/4"C
GHP - R63	GEOTHERMAL HEAT PUMP	208V/3PH	---	---	17.5	30/3/1	F	MEB2 - 1,3,5	3#10 & 1#10GRD - 3/4"C
PGHP - 63	GEOTHERMAL HP PUMP	120V/1PH	1/8	---	---	TS	---	MEB2 - 10	2#10 & 1#10GRD - 3/4"C
GHP - R64	GEOTHERMAL HEAT PUMP	208V/3PH	---	---	17.5	30/3/1	F	MEB2 - 7,9,11	3#10 & 1#10GRD - 3/4"C
PGHP - 64	GEOTHERMAL HP PUMP	120V/1PH	1/8	---	---	TS	---	MEB2 - 10	2#10 & 1#10GRD - 3/4"C
OSA - R1	OUTSIDE AIR UNIT	208V/3PH	---	---	56	100/3/1	F	MEA2 - 25,27,29	3#4 & 1#8GRD -1-1/4"C
OSA - R2	OUTSIDE AIR UNIT	208V/3PH	---	---	56	100/3/1	F	MEB2 - 19,21,23	3#4 & 1#8GRD -1-1/4"C
WP - R1	WATER PUMP	208V/3PH	7.5	---	---	60/3/1	F	MEB2 - 44,46,48	3#8 & 1#10GRD - 1"C
WP - R2	WATER PUMP	208V/3PH	7.5	---	---	60/3/1	F	MEB2 - 50,52,54	3#8 & 1#10GRD - 1"C
WP - R3	WATER PUMP	208V/3PH	1	---	---	30/3/1	F	MEB2 - 31,33,35	3#10 & 1#10GRD - 3/4"C
WP - R4	WATER PUMP	208V/3PH	1	---	---	30/3/1	F	MEB2 - 37,39,41	3#10 & 1#10GRD - 3/4"C
WP - R5	WATER PUMP	208V/3PH	7.5	---	---	60/3/1	F	MEB2 - 32,34,36	3#8 & 1#10GRD - 1"C
WP - R6	WATER PUMP	208V/3PH	7.5	---	---	60/3/1	F	MEB2 - 38,40,42	3#8 & 1#10GRD - 1"C
CEH - R1	ELECTRIC CEILING HEATER	208V/1PH	---	2	---	30/2/1	F	MEC1 - 1,3	2#10 & 1#10GRD - 3/4"C
CEH - R2	ELECTRIC CEILING HEATER	208V/1PH	---	2	---	30/2/1	F	MEA2 - 16,18	2#10 & 1#10GRD - 3/4"C
CEH - R3	ELECTRIC CEILING HEATER	208V/1PH	---	2	---	30/2/1	F	MEA2 - 20,22	2#10 & 1#10GRD - 3/4"C
CEH R4	ELECTRIC CEILING HEATER	208V/1PH	---	2	---	30/2/1	F	MEA2 - 21,23	2#10 & 1#10GRD - 3/4"C
CEH - R5	ELECTRIC CEILING HEATER	208V/1PH	---	2	---	30/2/1	F	MEB2 - 2,4	2#10 & 1#10GRD - 3/4"C
CEH - R6	ELECTRIC CEILING HEATER	208V/1PH	---	2	---	30/2/1	F	MEB2 - 6,8	2#10 & 1#10GRD - 3/4"C
DF - R1	LOW VELOCITY FAN	208V/3PH	2.5	---	---	30/3/1	F	MEC1 - 2,4,6	3#10 & 1#10GRD - 3/4"C
DF - R2	LOW VELOCITY FAN	208V/3PH	2.5	---	---	30/3/1	F	MEC1 - 8,10,12	3#10 & 1#10GRD - 3/4"C
KH-R1 LIGHTS	KITCHEN HOOD LIGHTS	120V/1PH	---	0.6	---	TS	---	KIT -66	2#10 & 1#10GRD - 3/4"C
KH-R2 LIGHTS	KITCHEN HOOD LIGHTS	120V/1PH	---	0.6	---	TS	---	KIT - 66	2#10 & 1#10GRD - 3/4"C
KFCC-R1	KITCHEN HOOD CONTROLS	120V/1PH	---	1	---	TS	---	KIT - 65	2#10 & 1#10GRD - 3/4"C
KFCC-R2	KITCHEN HOOD CONTROLS	120V/1PH	---	1	---	TS	---	KIT - 67	2#10 & 1#10GRD - 3/4"C
KH-R1 SUPPRESSION	KIT HOOD SUPPRESSION	120V/1PH	---	0.8	---	TS	---	KIT - 69	2#10 & 1#10GRD - 3/4"C
KH-R2 SUPPRESSION	KIT HOOD SUPPRESSION	120V/1PH	---	0.8	---	TS	---	KIT - 71	2#10 & 1#10GRD - 3/4"C
KEF-R1A	KITCHEN HOOD EXFAN	208V/3PH	1.75	---	---	30/3/3R	F	KIT - 68,70,72	3#10 & 1#10GRD - 3/4"C
KEF-R1B	KITCHEN HOOD EXFAN	208V/3PH	1.75	---	---	30/3/3R	F	KIT - 56,58,60	3#10 & 1#10GRD - 3/4"C
			---	---	---	---	---		
			---	---	---	---	---		

NOTES:
1. COORDINATE WITH MANUFACTURER'S CUTSHEETS OR NAMEPLATE DATA AND ADJUST OVERCURRENT PROTECTION AS NEEDED TO PROTECT EQUIPMENT PER MANUFACTURER'S RECOMMENDATIONS AND TO COMPLY WITH NEC AND ALL LOCAL CODES. COORDINATION SHALL BE DONE PRIOR TO BIDS AND ACCOUNTED FOR IN THE CONTRACTOR'S BID PRICE.
2. ALL DISCONNECTS SHALL BE HEAVY DUTY TYPE.
3. ALL FUSES SHALL BE SIZED PER NAMEPLATE DATA.
4. "NF" - NON-FUSED
5. "F" - FUSED
6. "TS" MANUAL MOTOR STARTER WITH THERMAL OVERLOAD ("W" - WEATHERPROOF) ("30-AMP" - 30-AMP RATED)
7. PROVIDE INTERCONNECTING RELAY SUCH THAT FAN IS CONTROLLED BY LIGHTING.
8. "WP" - WEATHERPROOF ENCLOSURE.
9. CONTRACTOR SHALL COORDINATE EXACT REQUIREMENTS AND LOCATIONS FOR ALL CIRCULATING PUMPS AND TIME CLOCKS WITH MECHANICAL CONTRACTOR PRIOR TO ROUGH-IN.

Gunn & Associates, P.C.
Consulting Engineers
3102 Highway 14
Millbrook, AL 36054
Tel: 334.285.1273
1200 Providence Park, Suite 200
Birmingham, AL 35242
GA#22-071

S|S&L ARCHITECTS
Montgomery | Dothan | Auburn | Huntsville | Pensacola
WWW.SSLARCH.COM | 256.285.1063

HUNTSVILLE READINESS CENTER
5180 MOORE'S MILL ROAD
HUNTSVILLE AL, 35811

Rev.	Description	Date

Job Number: 21112
Date: NOVEMBER 1, 2024
Drawn By: KRG, JBG
Checked By: JBG
Project Title

Sheet Title: MECHANICAL EQUIPMENT SCHEDULES
Sheet Number: RE3.8

ALABAMA REGISTERED NO. 20431 PROFESSIONAL 11-01-24 ENGINEER JOHN BARRY GRAVLEE

READINESS CENTER GENERAL EQUIPMENT SCHEDULE (CONT'D)

EQUIPMENT MARK:	EQUIPMENT DESCRIPTION:	VOLTAGE/PHASE:	ELECTRICAL CHARACTERISTICS:			DISCONNECT:	FUSE:	HOMERUN:	FEEDER:
			HP	KW	AMPS				
KEF-R2	KITCHEN HOOD EX FAN	120V/1PH	3/4	---	---	TS	---	KIT - 74	2#10 & 1#10GRD - 3/4"C
KSF/MAU-R1	KITCHEN SUPPLY FAN	208V/3PH	3	---	---	30/3/3R	F	KIT - 76,78,80	3#10 & 1#10GRD - 3/4"C
KSF - R2	KITCHEN SUPPLY FAN	120V/1PH	3/4	---	---	TS	---	KIT - 62	2#10 & 1#10GRD - 3/4"C
KSF - R1A	KITCHEN SUPPLY FAN	208V/3PH	3	---	---	30/3/3R	---	KIT - 44,46,48	3#10 & 1#10GRD - 3/4"C
KSF - R1B	KITCHEN SUPPLY FAN	208V/3PH	3	---	---	30/3/3R	---	KIT - 50,52,54	3#10 & 1#10GRD - 3/4"C
GWH - R1, R2,R3 R4	GAS WATER HEATER	120V/1PH	---	.09 EACH	---	TS (EACH)	---	MEA2 - 40	2#10 & 1#10GRD - 3/4"C
CP - R1	CIRCULATION PUMP	120V/1PH	1/40	---	---	TS	---	MEA2 - 42	2#10 & 1#10GRD - 3/4"C
GWH - R5,R6,R7	GAS WATER HEATER	120V/1PH	---	.09 EACH	---	TS (EACH)	---	MEB2 - 26	2#10 & 1#10GRD - 3/4"C
CP - R2	CIRCULATION PUMP	120V/1PH	1/40	---	---	30/3/3R	---	MEB2 - 28	2#10 & 1#10GRD - 3/4"C
CON - 1R	MECHANICAL CONTROLS	120V/1PH	---	1	---	TS	---	MEA2 - 44	2#10 & 1#10GRD - 3/4"C
CON - 2R	MECHANICAL CONTROLS	120V/1PH	---	1	---	TS	---	MEB2 - 30	2#10 & 1#10GRD - 3/4"C
L - 1	LOUVER	120V/1PH	---	---	3	TS	---	MEA2-46	2#10 & 1#10GRD - 3/4"C
L - 2	LOUVER	120V/1PH	---	---	3	TS	---	MEA2-46	2#10 & 1#10GRD - 3/4"C
L - 3	LOUVER	120V/1PH	---	---	3	TS	---	MEB2 - 49	2#10 & 1#10GRD - 3/4"C
L - 4	LOUVER	120V/1PH	---	---	3	TS	---	MEB2 - 49	2#10 & 1#10GRD - 3/4"C
			---	---	---	---	---		
			---	---	---	---	---		

NOTES:
1. COORDINATE WITH MANUFACTURER'S CUTSHEETS OR NAMEPLATE DATA AND ADJUST OVERCURRENT PROTECTION AS NEEDED TO PROTECT EQUIPMENT PER MANUFACTURER'S RECOMMENDATIONS AND TO COMPLY WITH NEC AND ALL LOCAL CODES. COORDINATION SHALL BE DONE PRIOR TO BIDS AND ACCOUNTED FOR IN THE CONTRACTOR'S BID PRICE.
2. ALL DISCONNECTS SHALL BE HEAVY DUTY TYPE.
3. ALL FUSES SHALL BE SIZED PER NAMEPLATE DATA.
4. "NF" - NON-FUSED
5. "F" - FUSED
6. "TS" MANUAL MOTOR STARTER WITH THERMAL OVERLOAD ("W" - WEATHERPROOF) ("30-AMP" - 30-AMP RATED)
7. PROVIDE INTERCONNECTING RELAY SUCH THAT FAN IS CONTROLLED BY LIGHTING.
8. "WP" - WEATHERPROOF ENCLOSURE.
9. CONTRACTOR SHALL COORDINATE EXACT REQUIREMENTS AND LOCATIONS FOR ALL CIRCULATING PUMPS AND TIME CLOCKS WITH MECHANICAL CONTRACTOR PRIOR TO ROUGH-IN.
10. FOR DHP0 - 1 FEED INDOOR UNIT FROM OUTDOOR UNIT AND PROVIDE DISCONNECT PER MANUFACTURERS RECOMMENDATIONS.

Gunn & Associates, P.C.
Consulting Engineers
3102 Highway 14
Millbrook, AL 36054
Tel: 334.285.1273
1200 Providence Park, Suite 200
Birmingham, AL 35242
GA#22-071

SS&L ARCHITECTS
Montgomery | Dothan | Auburn | Huntsville | Pensacola
WWW.SSLARCH.COM | 256.285.1063

Rev.	Description	Date

Job Number: 21112
Date: NOVEMBER 1, 2024
Drawn By: KRG, JBG
Checked By: JBG

Project Title:
HUNTSVILLE READINESS CENTER
5180 MOORE'S MILL ROAD
HUNTSVILLE AL, 35811

Sheet Title:
MECHANICAL EQUIPMENT SCHEDULES, CONT'D

Sheet Number:
RE3.9

ALABAMA REGISTERED
NO. 20431
PROFESSIONAL
ENGINEER
JOHN BARRY GRAILEE
11-01-24

GENERAL NOTES:

1. COORDINATE EACH AUXILAIRY SYSTEM WITH THEIR CORRESPONDING RISER DIAGRAMS FOR ADDITIONAL REQUIREMENTS.
2. COORDINATE AND MOUNT COMMUNICATIONS OUTLETS WITHIN 6" OF CORRESPONDING POWER RECEPTACLES. ADJUST LOCATIONS AS REQUIRED TO GO ALONG WITH EXISTING RECEPTACLES.
3. COORDINATE WITH MILLWORK SHOP DRAWINGS PRIOR TO ROUGH-IN FOR EXACT RECEPTACLE LOCATIONS. ADJUST AS NEEDED.
4. PROVIDE NEW SECURITY HARDWARE FOR DOOR PER DETAILS ON SHEET E6.2.
5. ROUTE AND TERMINATE ALL COMMUNICATIONS OUTLETS SHOWN ON THIS SHEET TO MDF-R.
6. TERMINATE AND TEST ALL COMMUNICATIONS CABLES.
7. SEE DETAILS SHEET E4.2 FOR COMMUNICATIONS OUTLET CABLING REQUIREMENTS.

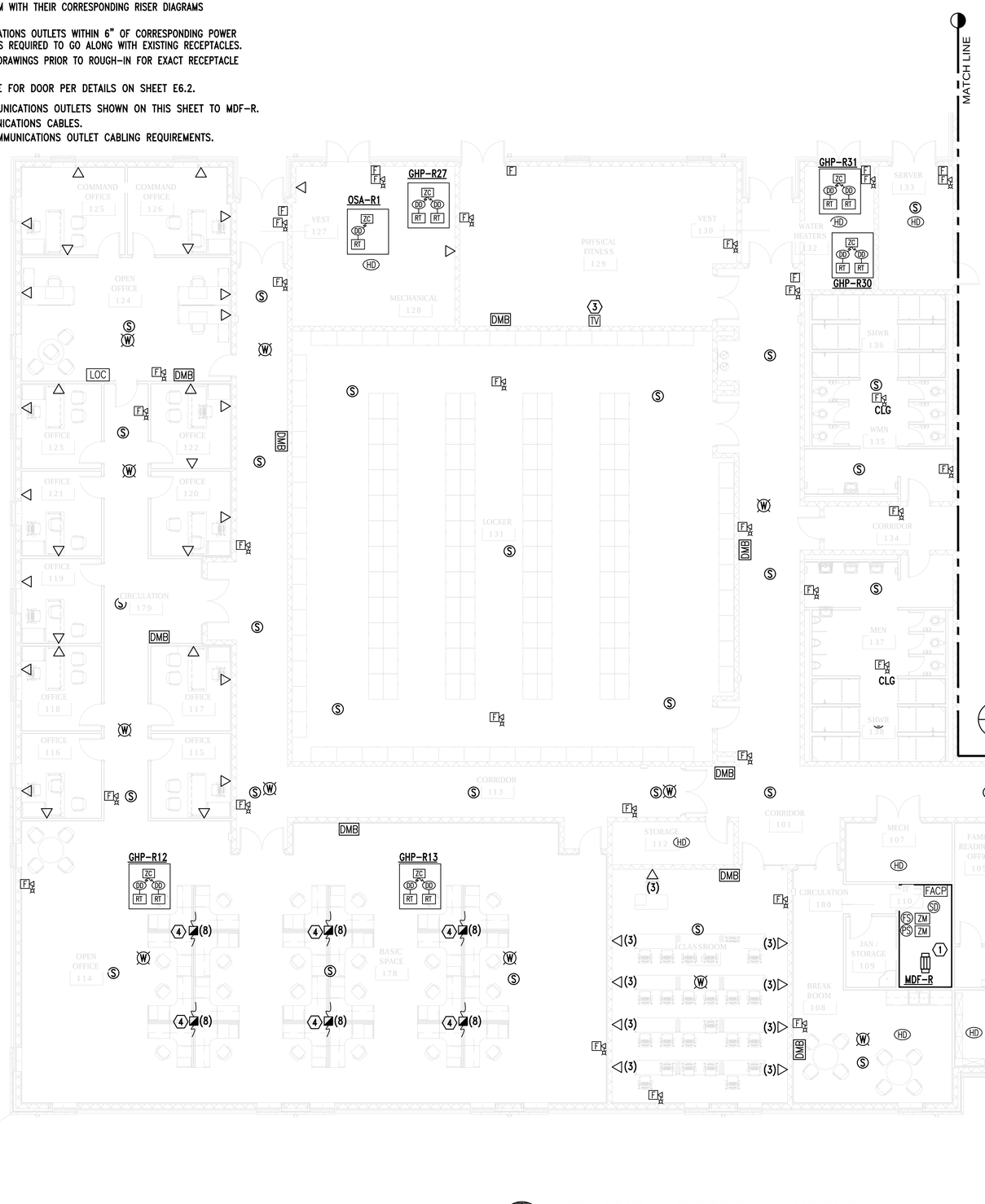

SHEET NOTES:

1. PROVIDE 4' CLEAR BETWEEN WALL AND IT RACK.
2. PROVIDE DOOR SECURITY PER DETAIL 2 ON SHEET E6.2. DOOR SHALL BE COMBINATION ACCESS CONTROLLED, KEYPAD, AND INTERCOM. DOOR SECURITY CAMERAS, INTERCOM, KEYPADS, ETC. SHALL BE BY OWNER'S SECURITY SYSTEM CONTRACTOR UNDER SEPARATE CONTRACT.
3. COORDINATE WITH OWNER FOR FINAL ROUGH-IN LOCATION OF TV AND ASSOCIATED OUTLETS.
4. OWNER FURNISHED-CONTRACTOR INSTALLED TELE-POWER POLE. PROVIDE FOR NUMBER OF COMMUNICATIONS RUNS AS INDICATED. CONTRACTOR TO TERMINATE DATA CABLING TO COMMUNIATIONS OUTLETS ONCE FURNITURE IS INSTALLED.

PAGING LEGEND

(S)	SPEAKER, BACK CAN, SUPPORTS, BAFFLED CONNECTED TO AMPLIFIER ZONE.
(S)H	WALL MOUNTED SPEAKER AND SUPPORTS. (WEATHERPROOF WHEN INDICATED)
—S—	CONDUIT AND CABLE AS REQUIRED.

PAGING SYSTEM NOTES

1. PAGING SYSTEM SHALL BE INSTALLED TO INCLUDE 1 ZONE OF PAGING.
2. THE PAGING SYSTEM SHALL BE SEPARATE FROM THE FIRE ALARM SYSTEM.
3. PROVIDE COMPLETE WITH AMPLIFIER.

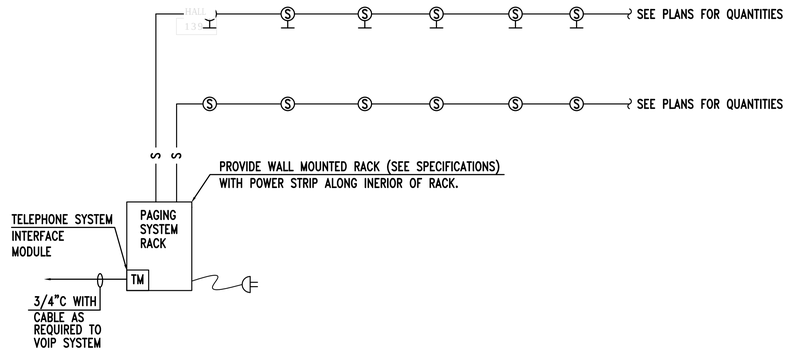

2 RE4.1 RISER DIAGAM - PAGING SYSTEM
NO SCALE

1 RE4.1 ZONE "A" FLOOR PLAN - AUXILIARY
SCALE: 1/8"=1'-0"

1/8" = 1'-0
8' 0 8 16 FT
GRAPHIC SCALE

Gunn & Associates, P.C.
Consulting Engineers
3102 Highway 14
Millbrook, AL 36054
Tel: 334.285.1273
1200 Providence Park, Suite 200
Birmingham, AL 35242
GA#22-071

SS&L ARCHITECTS
Montgomery | Dothan | Auburn | Huntsville | Pensacola
WWW.SSLARCH.COM | 256.285.1063

Rev.	Description	Date

Job Number 21112
Date NOVEMBER 1, 2024
Drawn By KRG, JBG
Checked By JBG

Project Title
HUNTSVILLE READINESS CENTER
5180 MOORE'S MILL ROAD
HUNTSVILLE AL, 35811

Sheet Title
ZONE "A" FLOOR PLAN - AUXILIARY

Sheet Number
RE4.1

ALABAMA REGISTERED NO. 20431 PROFESSIONAL ENGINEER JOHN BARRY GRAVLEE
11-01-24

GENERAL NOTES:

1. ROUTE AND TERMINATE ALL COMMUNICATIONS OUTLETS SHOWN ON THIS SHEET TO IDF-R1.
2. TERMINATE AND TEST ALL COMMUNICATIONS CABLES.
3. SEE DETAILS SHEET E4.2 FOR COMMUNICATIONS OUTLET CABLING REQUIREMENTS.

SHEET NOTES:

(1) PROVIDE 4' CLEAR BETWEEN WALL AND IT RACK.

(2) HOOD, FANS, STARTERS AND CONTROL PANEL ARE SUPPLIED BY THE FOOD SERVICE ELECTRICAL SUPPLIER. ALL ELECTRICAL COMPONENTS (INCLUDING THE SHUNT TRIP CIRCUIT BREAKERS FEEDING THE KITCHEN EQUIPMENT) SHALL BE FURNISHED AND INSTALLED BY THE ELECTRICAL CONTRACTOR. THE ELECTRICAL CONTRACTOR SHALL VERIFY THE LOCATION OF ALL COMPONENTS WITH THE FOOD SERVICE EQUIPMENT SUPPLIER AND INSTALLER AND MAKE NECESSARY POWER AND CONTROL CONNECTIONS. THE EXHAUST FAN SHALL BE INTERLOCKED WITH THE HOOD FIRE SUPPRESS SYSTEM SUCH THAT THE FAN RUNS WHEN THE SUPPRESSION SYSTEM IS ACTIVATED. THE SUPPLY AIR FAN SHALL BE SHUT DOWN WHEN THE SUPPRESSION SYSTEM IS ACTIVATED. SHUNT TRIP CIRCUIT BREAKER SERVING (THE CIRCUITS UNDER THE HOOD WHEN THE HOOD FIRE SUPPRESSION SYSTEM IS ACTIVATED SHALL BE DE-ENERGIZED). INTERLOCK THE HOOD FIRE SUPPRESSION SYSTEM WITH THE FIRE ALARM SYSTEM.

(3) PROVIDE FIRE ALARM CONNECTION TO ANSUL PANEL. COORDINATE WITH ITEMS LISTED IN NOTE #2 ABOVE.

(4) OWNER FURNISHED-CONTRACTOR INSTALLED TELE-POWER POLE. PROVIDE FOR NUMBER OF COMMUNICATIONS RUNS AS INDICATED. CONTRACTOR TO TERMINATE DATA CABLING TO COMMUNIATIONS OUTLETS ONCE FURNITURE IS INSTALLED.

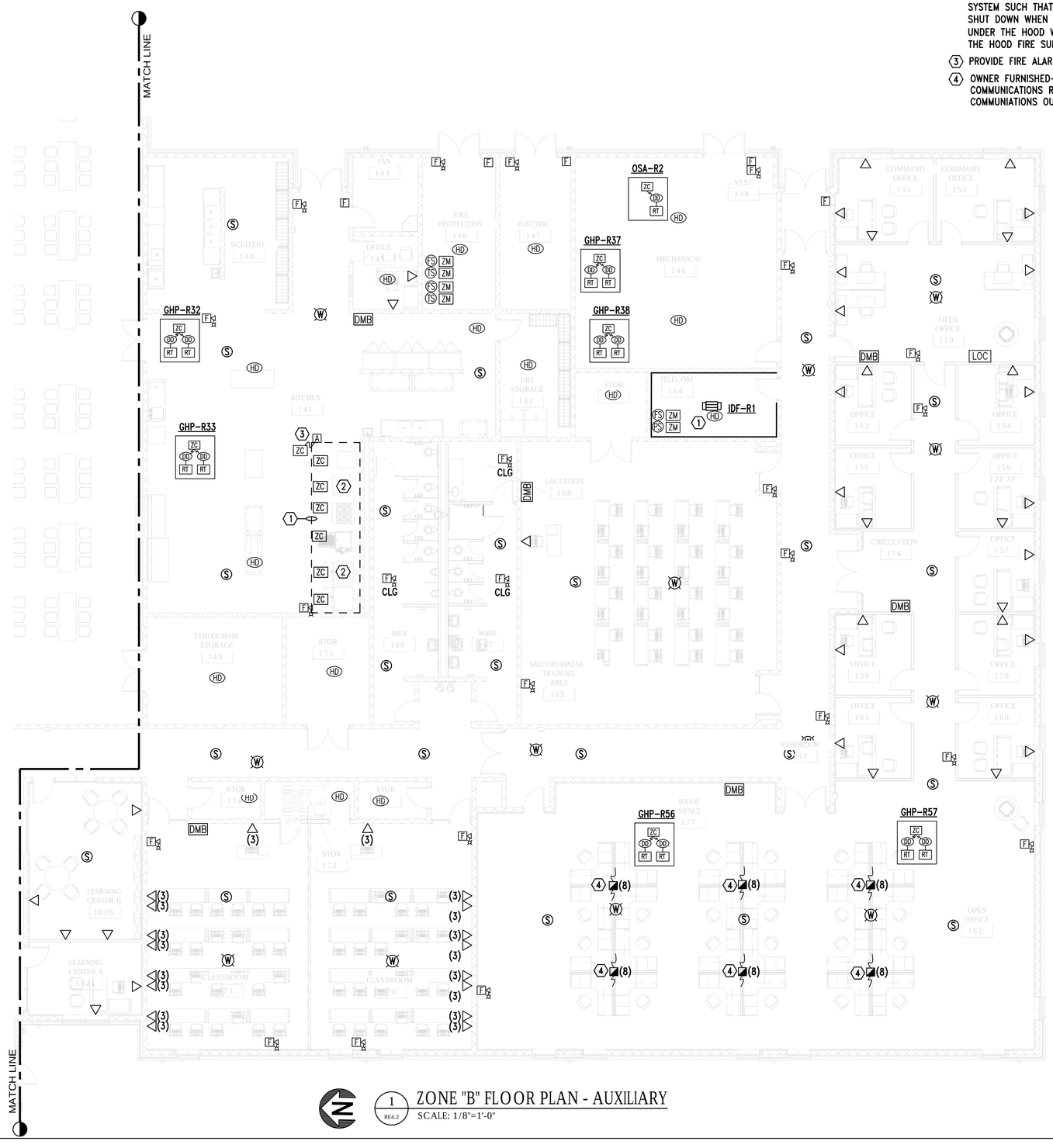

1 RE4.2 ZONE "B" FLOOR PLAN - AUXILIARY
SCALE: 1/8"=1'-0"

1/8" = 1'-0
8' 0 8 16 FT
GRAPHIC SCALE

Gunn & Associates, P.C.
Consulting Engineers
3102 Highway 14
Millbrook, AL 36054
Tel: 334.285.1273
1200 Providence Park, Suite 200
Birmingham, AL 35242
GA#22-071

SS&L ARCHITECTS
Montgomery | Dothan | Auburn | Huntsville | Pensacola
WWW.SSLARCH.COM | 256.285.1063

Rev.	Description	Date

Job Number 21112
Date NOVEMBER 1, 2024
Drawn By KRG, JBG
Checked By JBG
Project Title

HUNTSVILLE READINESS CENTER
5180 MOORE'S MILL ROAD
HUNTSVILLE AL, 35811

Sheet Title
ZONE "B" FLOOR PLAN - AUXILIARY

Sheet Number
RE4.2

ALABAMA REGISTERED NO. 20431 PROFESSIONAL ENGINEER JOHN BARRY GRAILEE 11-01-24

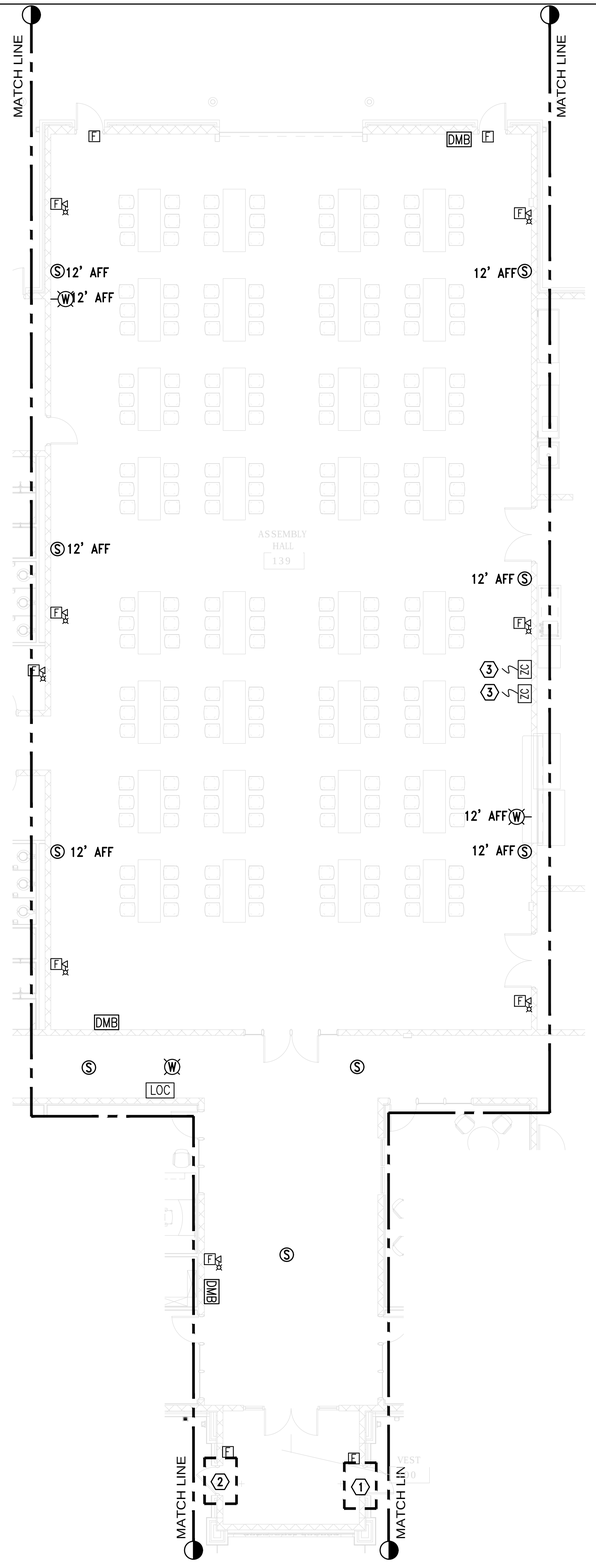

1 RE4.3 ZONE "C" FLOOR PLAN - AUXILIARY
SCALE: 1/8"=1'-0"

SHEET NOTES:

1. PROVIDE DOOR SECURITY ROUGH-IN PER DETAIL 1 ON SHEET E6.2.
2. PROVIDE DOOR SECURITY ROUGH-IN PER DETAIL 2 ON SHEET E6.2.
3. PROVIDE ZONE CONTROL MODULE TO SHUT DOWN HIGH VOLUME/LOW VELOCITY FAN UPON ACTIVATION OF FIRE ALARM.

1/8" = 1'-0
8' 0 8 16 FT
GRAPHIC SCALE

Gunn & Associates, P.C.
Consulting Engineers
3102 Highway 14
Millbrook, AL 36054
Tel: 334.285.1273
1200 Providence Park, Suite 200
Birmingham, AL 35242
GA#22-071

S|S&L ARCHITECTS
Montgomery | Dothan | Auburn | Huntsville | Pensacola
WWW.SSLARCH.COM | 256.285.1063

Rev.	Description	Date

Job Number 21112
Date NOVEMBER 1, 2024
Drawn By KRG, JBG
Checked By JBG
Project Title

HUNTSVILLE READINESS CENTER
5180 MOORE'S MILL ROAD
HUNTSVILLE AL, 35811

Sheet Title
ZONE "C" FLOOR PLAN - AUXILIARY

Sheet Number
RE4.3

ALABAMA REGISTERED No. 20431 PROFESSIONAL ENGINEER JOHN BARRY GRAVLEE
11-01-24

GENERAL NOTES:

1. ALL OCCUPANCY SENSORS LOCATIONS ARE APPROXIMATE, REFER TO MANUFACTURER'S INSTALLATION INSTRUCTIONS FOR EXACT MOUNTING AND SPACING REQUIREMENTS PRIOR TO INSTALLATION.
2. ULTRASONIC CEILING MOUNTED OCCUPANCY SENSORS SHALL BE LOCATED A MINIMUM OF SIX (6) FEET FROM HVAC SUPPLY/RETURN VENTS.
3. CONTRACTOR IS RESPONSIBLE FOR PROPER SENSITIVITY AND TIME DELAY SETTINGS FOR OCCUPANCY SENSORS, FOLLOWING THE MANUFACTURER'S RECOMMENDED PLACEMENT, AND FIELD VERIFICATION OF CIRCUITS WITH RESPECT TO POWER PACK PLACEMENT.
4. CONTRACTOR IS RESPONSIBLE FOR FIELD VERIFICATION OF REQUIRED NUMBER OF POWER PACKS FOR OCCUPANCY SENSORS AND THE FOLLOWING:
   a. ONE POWER PACK IS REQUIRED FOR EACH CONTROLLED CIRCUIT.
   b. REFER TO MANUFACTURER'S INSTALLATION GUIDE FOR MAXIMUM NUMBER OF SENSORS CONNECTED TO A POWER PACK.
   c. IF MULTIPLE CIRCUITS OR DUAL SWITCHING ARE TO BE CONTROLLED BY OCCUPANCY SENSORS, PROVIDE ALL ADDITIONAL AUXILIARY RELAYS AND POWER PACKS AS NEEDED.
5. OCCUPANCY SENSORS MOUNTED OVER DOORWAYS SHALL BE PLACED ONE (1) FOOT INSIDE THRESHOLD.
6. OCCUPANCY SENSORS IN CLASSROOMS SHALL HAVE THE WALK-THROUGH FEATURE DISABLED. UNLESS SPECIFICALLY RECOMMENDED BY MANUFACTURER.
7. SEE POWER PLANS FOR PANEL LOCATIONS.
8. PROVIDE DEDICATED NEUTRALS FOR EACH MULTIWIRE HOMERUN PER NEC.
9. PROVIDE LOW VOLTAGE CABLING AS REQUIRED TO EACH LIGHT FIXTURE FROM THE 0-10V DIMMING SWITCH AS REQUIRED TO ACCOMPLISH THE 0-10V DIMMING.

OCCUPANCY SENSOR NOTES:

1. ALL OCCUPANCY SENSORS SHALL BE PROVIDED WITH AN INPUT THAT CAN BE CONNECTED INTO THE MECHANICAL CONTROL SYSTEM.

POWER PACK NOTES:

1. CONTRACTOR SHALL LOCATE ALL POWER PACKS ABOVE DOORS IN EACH ROOM 6" ABOVE CEILING GRID. MOUNT IN UTILITY TYPE ROOMS WHENEVER POSSIBLE. POWER PACKS SHOWN ON THIS PLAN IS DIAGRAMMATIC FOR CIRCUITRY. DO NOT USE THESE FOR ACTUAL LOCATIONS. PROVIDE A PHENOLIC LABEL WITH 1" TEXT THAT READS "PP" GLUED ON CEILING GRID UNDER POWER PACK FOR EACH LOCATION FOR FUTURE MAINTENANCE. PROVIDE ACCESS PANEL WHERE LOCATED ABOVE HARD CEILINGS.

PLENUM:

1. ALL CABLING NOT IN CONDUIT ABOVE CEILINGS SHALL BE PLENUM RATED.

SHEET NOTES:

(1) THIS AREA IS CLASSIFIED AS A CLASS I, DIVISION 2 HAZARDOUS AREA. PROVIDE LUMINAIRES, CONDUIT, WIRING METHODS AND SEAL OFF FITTINGS AS REQUIRED BY ARTICLE 500 OF THE NATIONAL ELECTRICAL CODE (NFPA 70).

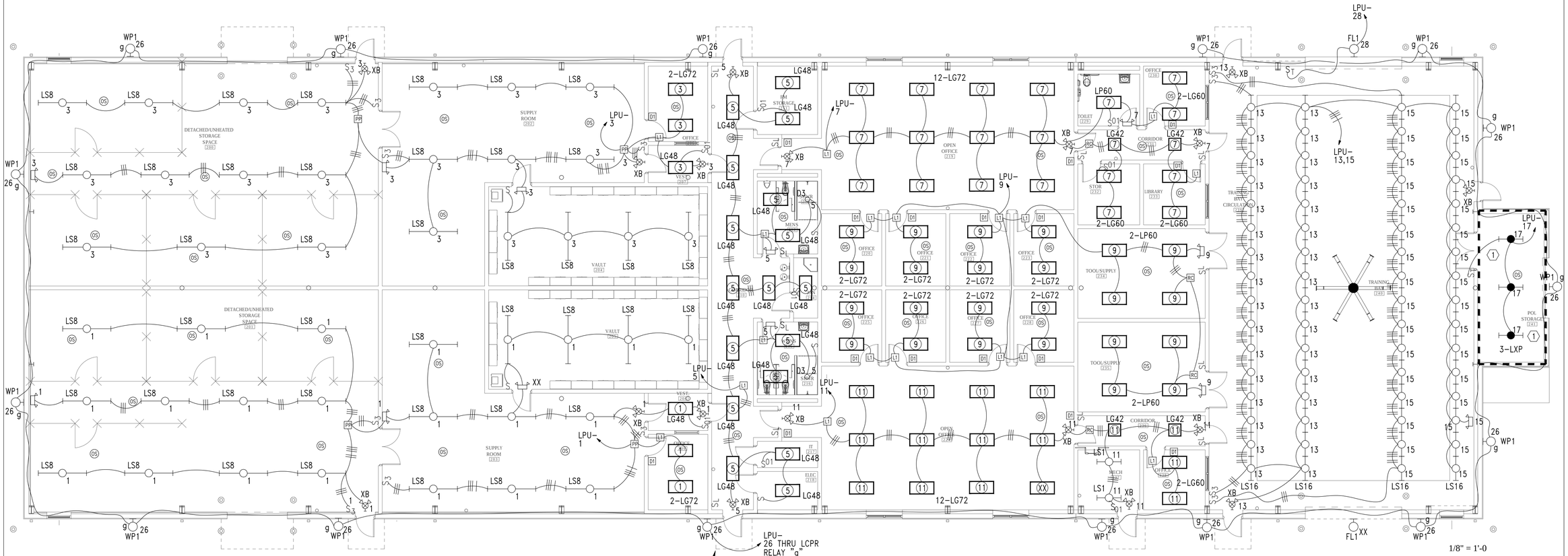

N

1 / GE2.1 FLOOR PLAN - UNITY SUPPLY / GPTB - LIGHTING

SCALE: 1/8"=1'-0"

Gunn & Associates, P.C.
Consulting Engineers
3102 Highway 14
Millbrook, AL 36054
Tel: 334.285.1273
1200 Providence Park, Suite 200
Birmingham, AL 35242
GA#22-071

ALABAMA REGISTERED 20431 PROFESSIONAL ENGINEER JOHN BARRY GRAY, JR. 11-01-24

S|S&L ARCHITECTS
Montgomery | Dothan | Auburn | Huntsville | Pensacola
WWW.SSLARCH.COM | 256.285.1063

Rev.	Description	Date

Job Number: 21112

Date: NOVEMBER 1, 2024

Drawn By: KRG, JBG

Checked By: JBG

Project Title

HUNTSVILLE READINESS CENTER
5180 MOORE'S MILL ROAD
HUNTSVILLE AL, 35811

Sheet Title: FLOOR PLAN - UNITY SUPPLY / GPTB - LIGHTING

Sheet Number: GE2.1

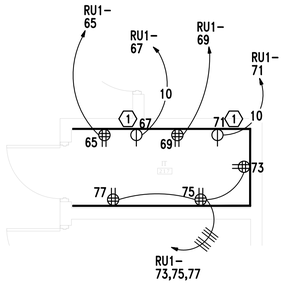

2 GE3.1 PARTIAL FLOOR PLAN - IT 217 - POWER

SCALE: 1/8"=1'-0"

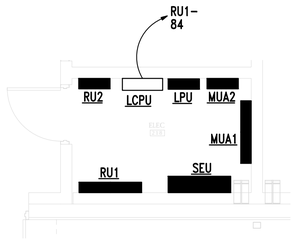

3 GE3.1 PARTIAL FLOOR PLAN - ELECT 218 - POWER

SCALE: 1/8"=1'-0"

SHEET NOTES:

1. PROVIDE NEMA L5-30R RECEPTACLE. CONTRACTOR SHALL MOUNT RECEPTACLE ON BACK OF COMMUNICATIONS RACK FROM CEILING ABOVE. PROVIDE KELLUMS GRIPS AND STRAIN RELIEFS AND FLEXIABLE CONNECTION DOWN TO THE RACK FROM THE CEILING.
2. OWNER FURNISHED-CONTRACTOR INSTALLED TELE-POWER POLE. 120 VOLT, 7 WIRE. PROVIDE JUNCTION BOX ABOVE FINISHED CEILING WITH CAPPED CIRCUIT FOR FUTURE POWER POLE. CONTRACTOR TO CONNECT POWER TO FURNITURE ONCE FURNITURE IS INSTALLED.
3. SEE PARTIAL FLOOR PLAN THIS SHEET FOR POWER IN THIS AREA.
4. THIS AREA IS CLASSIFIED AS A CLASS I, DIVISION 2 HAZARDOUS AREA. PROVIDE RECEPTACLES, CONDUIT, WIRING METHODS AND SEAL OFF FITTINGS AS REQUIRED BY ARTICLE 500 OF THE NATIONAL ELECTRICAL CODE (NFPA 70).

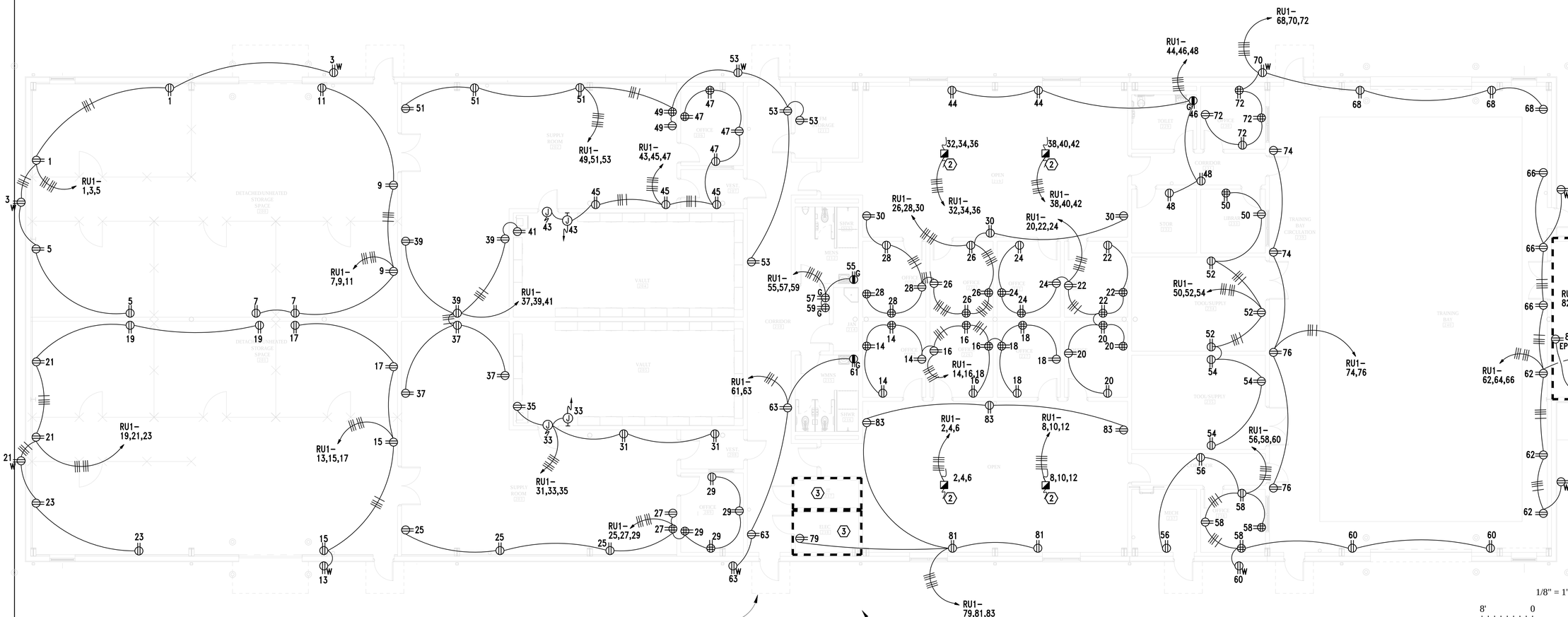

1 GE3.1 FLOOR PLAN - UNITY SUPPLY / GPTB - POWER

SCALE: 1/8"=1'-0"

S|S&L ARCHITECTS
Montgomery | Dothan | Auburn | Huntsville | Pensacola
WWW.SSLARCH.COM | 256.285.1063

Rev.	Description	Date

Job Number: 21112

Date: NOVEMBER 1, 2024

Drawn By: KRG, JBG

Checked By: JBG

Project Title

HUNTSVILLE READINESS CENTER
5180 MOORE'S MILL ROAD
HUNTSVILLE AL, 35811

Sheet Title
FLOOR PLAN - UNIT SUPPLY / GPTB - POWER

Sheet Number
GE3.1

Gunn & Associates, P.C.
Consulting Engineers
3102 Highway 14
Millbrook, AL 36054
Tel: 334.285.1273
1200 Providence Park, Suite 200
Birmingham, AL 35242
GA#22-071

ALABAMA REGISTERED
NO. 20431
PROFESSIONAL
ENGINEER
JOHN BARRY GRAY, II, P.E.
11-01-24

SHEET NOTES:

1. THIS AREA IS CLASSIFIED AS A CLASS I, DIVISION 2 HAZARDOUS AREA. PROVIDE DISCONNECTS, CONDUIT, WIRING METHODS AND SEAL OFF FITTINGS AS REQUIRED BY ARTICLE 500 OF THE NATIONAL ELECTRICAL CODE (NFPA 70).

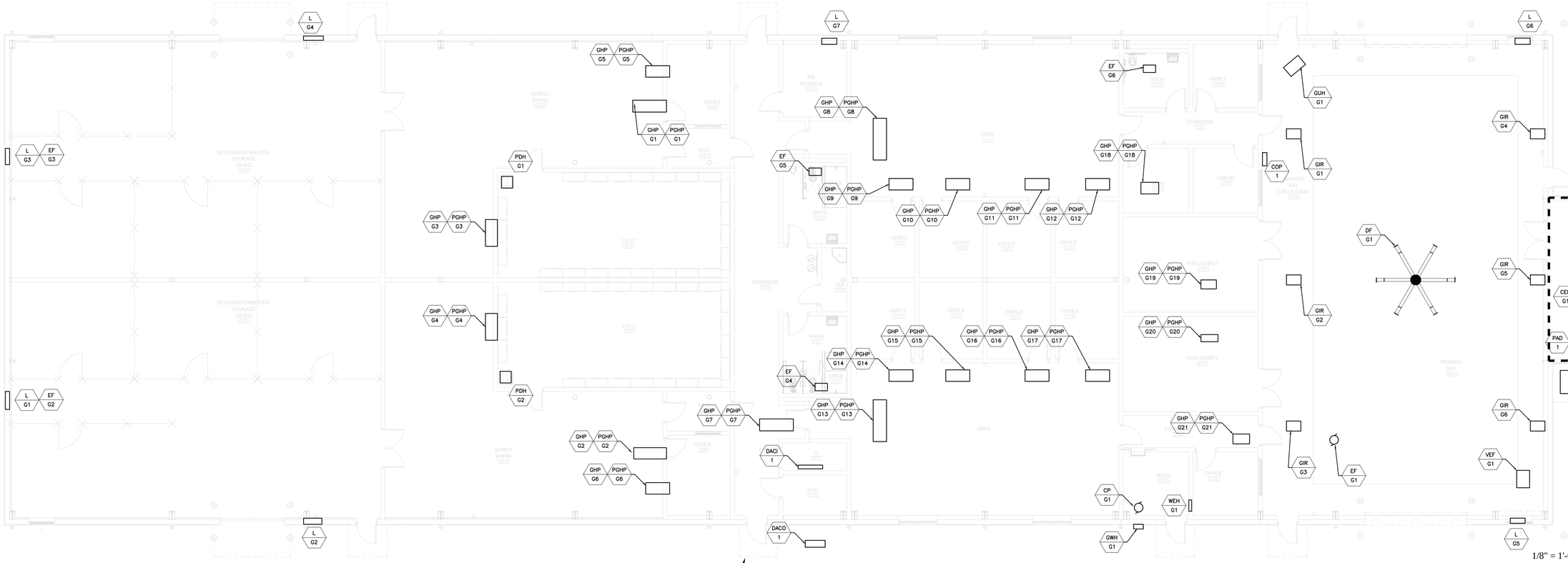

1/8" = 1'-0

8' 0 8 16 FT

GRAPHIC SCALE

1 GE3.2 FLOOR PLAN - UNITY SUPPLY / GPTB - MECHANICAL POWER

SCALE: 1/8"=1'-0"

S|S&L ARCHITECTS
Montgomery | Dothan | Auburn | Huntsville | Pensacola
WWW.SSLARCH.COM | 256.285.1063

Rev.	Description	Date

Job Number 21112

Date NOVEMBER 1, 2024

Drawn By KRG, JBG

Checked By JBG

Project Title

HUNTSVILLE READINESS CENTER
5180 MOORE'S MILL ROAD
HUNTSVILLE AL, 35811

Sheet Title
FLOOR PLAN - UNIT SUPPLY / GPTB - MECHANICAL POWER

Sheet Number
GE3.2

ALABAMA REGISTERED
No. 20431 PROFESSIONAL
11-01-24
ENGINEER
JOHN BARRY GRAVLEE

Gunn & Associates, P.C.
Consulting Engineers
3102 Highway 14
Millbrook, AL 36054
Tel: 334.285.1273
1200 Providence Park, Suite 200
Birmingham, AL 35242
GA#22-071

UNIT STORAGE GENERAL EQUIPMENT SCHEDULE

EQUIPMENT MARK:	EQUIPMENT DESCRIPTION:	VOLTAGE/PHASE:	ELECTRICAL CHARACTERISTICS:			DISCONNECT:	FUSE:	HOMERUN:	FEEDER:
			HP	KW	AMPS				
GHP - G1	GEOTHERMAL HEAT PUMP	208V/3PH	---	---	11.1	30/3/3R	F	MUA1 - 1,3,5	3#10 & 1#10GRD - 3/4"C
PGHP - 1	GEOTHERMAL HP PUMP	120V/1PH	1/8	---	---	TS	---	MUA1 - 24	2#10 & 1#10GRD - 3/4"C
GHP - G2	GEOTHERMAL HEAT PUMP	208V/3PH	---	---	11.1	30/3/3R	F	MUA1 - 7,9,11	3#10 & 1#10GRD - 3/4"C
PGHP - 2	GEOTHERMAL HP PUMP	120V/1PH	1/8	---	---	TS	---	MUA1 22	2#10 & 1#10GRD - 3/4"C
GHP - G3	GEOTHERMAL HEAT PUMP	208V/1PH	---	---	8.5	30/2/3R	F	MUA1 - 13,15	3#10 & 1#10GRD - 3/4"C
PGHP - 3	GEOTHERMAL HP PUMP	120V/1PH	1/8	---	---	TS	---	MUA1 - 24	2#10 & 1#10GRD - 3/4"C
GHP - G4	GEOTHERMAL HEAT PUMP	208V/1PH	---	---	8.5	30/2/3R	F	MUA1 - 17,19	3#10 & 1#10GRD - 3/4"C
PGHP -4	GEOTHERMAL HP PUMP	120V/1PH	1/8	---	---	TS	---	MUA1 22	2#10 & 1#10GRD - 3/4"C
GHP - G5	GEOTHERMAL HEAT PUMP	208V/1PH	---	---	3.8	30/2/3R	F	MUA1 - 21,23	3#10 & 1#10GRD - 3/4"C
PGHP -5	GEOTHERMAL HP PUMP	120V/1PH	1/8	---	---	TS	---	MUA1 - 24	2#10 & 1#10GRD - 3/4"C
GHP - G6	GEOTHERMAL HEAT PUMP	208V/1PH	---	---	3.8	30/2/3R	F	MUA1 - 25,27	3#10 & 1#10GRD - 3/4"C
PGHP -6	GEOTHERMAL HP PUMP	120V/1PH	1/8	---	---	TS	---	MUA1 22	2#10 & 1#10GRD - 3/4"C
GHP - G7	GEOTHERMAL HEAT PUMP	208V/3PH	---	---	11.1	30/2/3R	F	MUA1 - 29,31,33	3#10 & 1#10GRD - 3/4"C
PGHP -7	GEOTHERMAL HP PUMP	120V/1PH	1/8	---	---	TS	---	MUA1 22	2#10 & 1#10GRD - 3/4"C
GHP - G8	GEOTHERMAL HEAT PUMP	208V/3PH	---	---	20.8	60/3/3R	F	MUA1 - 35,57,39	3#8 & 1#10GRD - 14"C
PGHP -8	GEOTHERMAL HP PUMP	120V/1PH	1/8	---	---	TS	---	MUA1 - 20	2#10 & 1#10GRD - 3/4"C
GHP - G9	GEOTHERMAL HEAT PUMP	208V/1PH	---	---	3.8	30/2/3R	F	MUA1 - 43,45	2#10 & 1#10GRD - 3/4"C
PGHP - 9	GEOTHERMAL HP PUMP	120V/1PH	1/8	---	---	TS	---	MUA1 - 20	2#10 & 1#10GRD - 3/4"C
GHP - G10	GEOTHERMAL HEAT PUMP	208V/1PH	---	---	3.8	30/2/3R	F	,MUA1 - 47,49	2#10 & 1#10GRD - 3/4"C
PGHP - 10	GEOTHERMAL HP PUMP	120V/1PH	1/8	---	---	TS	---	MUA1 - 20	2#10 & 1#10GRD - 3/4"C
GHP - G11	GEOTHERMAL HEAT PUMP	208V/1PH	---	---	3.8	30/2/3R	F	MUA1 - 51,53	2#10 & 1#10GRD - 3/4"C
PGHP - 11	GEOTHERMAL HP PUMP	120V/1PH	1/8	---	---	TS	---	MUA1 - 20	2#10 & 1#10GRD - 3/4"C
GHP - G12	GEOTHERMAL HEAT PUMP	208V/1PH	---	---	3.8	30/2/3R	F	MUA1 - 55,57	2#10 & 1#10GRD - 3/4"C
PGHP - 12	GEOTHERMAL HP PUMP	120V/1PH	1/8	---	---	TS	---	MUA1 - 20	2#10 & 1#10GRD - 3/4"C
GHP - G13	GEOTHERMAL HEAT PUMP	208V/3PH	---	---	20.8	60/3/3R	F	MUA1 - 59,61,63	3#8 & 1#10GRD - 14"C
PGHP -13	GEOTHERMAL HP PUMP	120V/1PH	1/8	---	---	TS	---	MUA1 - 18	2#10 & 1#10GRD - 3/4"C
GHP - G14	GEOTHERMAL HEAT PUMP	208V/1PH	---	---	3.8	30/2/3R	F	MUA1 - 65,67	2#10 & 1#10GRD - 3/4"C
PGHP - 14	GEOTHERMAL HP PUMP	120V/1PH	1/8	---	---	TS	---	MUA1 - 18	2#10 & 1#10GRD - 3/4"C
GHP - G15	GEOTHERMAL HEAT PUMP	208V/1PH	---	---	3.8	30/2/3R	F	MUA1 - 69,71	2#10 & 1#10GRD - 3/4"C
PGHP - 15	GEOTHERMAL HP PUMP	120V/1PH	1/8	---	---	TS	---	MUA1 - 18	2#10 & 1#10GRD - 3/4"C
GHP - G16	GEOTHERMAL HEAT PUMP	208V/1PH	---	---	3.8	30/2/3R	F	MUA1 - 73,75	2#10 & 1#10GRD - 3/4"C
PGHP - 16	GEOTHERMAL HP PUMP	120V/1PH	1/8	---	---	TS	---	MUA1 - 18	2#10 & 1#10GRD - 3/4"C
GHP - G17	GEOTHERMAL HEAT PUMP	208V/1PH	---	---	3.8	30/2/3R	F	MUA1 - 77,79	2#10 & 1#10GRD - 3/4"C
PGHP - 17	GEOTHERMAL HP PUMP	120V/1PH	1/8	---	---	TS	---	MUA1 - 18	2#10 & 1#10GRD - 3/4"C
GHP - G18	GEOTHERMAL HEAT PUMP	208V/1PH	---	---	8.5	30/2/3R	F	MUA1 - 81,83	2#10 & 1#10GRD - 3/4"C
PGHP - 18	GEOTHERMAL HP PUMP	120V/1PH	1/8	---	---	TS	---	MUA1 - 14	2#10 & 1#10GRD - 3/4"C
GHP - G19	GEOTHERMAL HEAT PUMP	208V/1PH	---	---	3.8	30/2/3R	F	MUA2 - 1,3	2#10 & 1#10GRD - 3/4"C
PGHP - 19	GEOTHERMAL HP PUMP	120V/1PH	1/8	---	---	TS	---	MUA1 - 14	2#10 & 1#10GRD - 3/4"C

NOTES:
1. COORDINATE WITH MANUFACTURER'S CUTSHEETS OR NAMEPLATE DATA AND ADJUST OVERCURRENT PROTECTION AS NEEDED TO PROTECT EQUIPMENT PER MANUFACTURER'S RECOMMENDATIONS AND TO COMPLY WITH NEC AND ALL LOCAL CODES. COORDINATION SHALL BE DONE PRIOR TO BIDS AND ACCOUNTED FOR IN THE CONTRACTOR'S BID PRICE.
2. ALL DISCONNECTS SHALL BE HEAVY DUTY TYPE.
3. ALL FUSES SHALL BE SIZED PER NAMEPLATE DATA.
4. "NF" - NON-FUSED
5. "F" - FUSED
6. "TS" MANUAL MOTOR STARTER WITH THERMAL OVERLOAD ("W" - WEATHERPROOF) ("30-AMP" - 30-AMP RATED), ("EP" EXPLOSION PROOF 30 AMP RATED)
7. PROVIDE INTERCONNECTING RELAY SUCH THAT FAN IS CONTROLLED BY LIGHTING.
8. "WP" - WEATHERPROOF ENCLOSURE.
9. CONTRACTOR SHALL COORDINATE EXACT REQUIREMENTS AND LOCATIONS FOR ALL CIRCULATING PUMPS AND TIME CLOCKS WITH MECHANICAL CONTRACTOR PRIOR TO ROUGH-IN.
10. ROUTE ALL CIRCUITING FOR SHOWER CUTOFF VALVES THROUGH JAIL CONTROL SYSTEM. SEE JAIL CONTROL DRAWINGS.
11. FURNISH NEMA 5-20R RECEPTACLE AND CIRCUITING AS SHOWN ABOVE FOR THIS UNIT (LOCATED INSIDE VAULT AREA).

UNIT STORAGE GENERAL EQUIPMENT SCHEDULE (cont'd)

EQUIPMENT MARK:	EQUIPMENT DESCRIPTION:	VOLTAGE/PHASE:	ELECTRICAL CHARACTERISTICS:			DISCONNECT:	FUSE:	HOMERUN:	FEEDER:
			HP	KW	AMPS				
GHP - G20	GEOTHERMAL HEAT PUMP	208V/1PH	---	---	3.8	30/2/3R	F	MUA1 - 2,4	2#10 & 1#10GRD - 3/4"C
PGHP - 20	GEOTHERMAL HP PUMP	120V/1PH	1/8	---	---	TS	---	MUA1 - 14	2#10 & 1#10GRD - 3/4"C
GHP - G21	GEOTHERMAL HEAT PUMP	208V/1PH	---	---	3.8	30/2/3R	F	MUA1 - 6,8	2#10 & 1#10GRD - 3/4"C
PGHP - 21	GEOTHERMAL HP PUMP	120V/1PH	1/8	---	---	TS	---	MUA1 - 14	2#10 & 1#10GRD - 3/4"C
DACO - 1	DUCTLESS OUTDOOR UNIT	208V/1PH	---	---	16	30/2/3R	F	MUA1 - 62,64	2#10 & 1#10GRD - 3/4"C
DACI - 1	DUCTLESS INDOOR UNIT	208V/1PH	---	---	1	30/2/1	F	MUA1 - 66,68	2#10 & 1#10GRD - 3/4"C
CEH - G1	ELECT CEILING HEATER	208V/1PH	---	2.5	---	30/2/1	F	MUA1 - 70,72	2#10 & 1#10GRD - 3/4"C
WEH - G1	ELECT WAL HEATER	208V/1PH	---	2	---	30/2/1	F	MUA1 - 74,76	2#10 & 1#10GRD - 3/4"C
GUH - G1	GAS UNIT HEATER	120V/1PH	---	---	2.5	TS	---	MUA1 - 78	2#10 & 1#10GRD - 3/4"C
PDH - G1	PORTABLE DEHUMIDIFIER	120V/1PH	---	---	4.5	CORD	AND	PLUG (NOTE 11) MUA1 - 80	2#10 & 1#10GRD - 3/4"C
PDH - G2	PORTABLE DEHUMIDIFIER	120V/1PH	---	---	4.5	CORD	AND	PLUG (NOTE 11) MUA1 - 82	2#10 & 1#10GRD - 3/4"C
L - G1	LOUVER	120V/1PH	---	---	1	TS	---	MUA1 - 28	2#10 & 1#10GRD - 3/4"C
L - G2	LOUVER	120V/1PH	---	---	1	TS	---	MUA1 - 28	2#10 & 1#10GRD - 3/4"C
L - G3	LOUVER	120V/1PH	---	---	1	TS	---	MUA1 - 28	2#10 & 1#10GRD - 3/4"C
L - G4	LOUVER	120V/1PH	---	---	1	TS	---	MUA1 - 28	2#10 & 1#10GRD - 3/4"C
L - G5	LOUVER	120V/1PH	---	---	1	TS	---	MUA1 - 26	2#10 & 1#10GRD - 3/4"C
L - G6	LOUVER	120V/1PH	---	---	1	TS	---	MUA1 - 26	2#10 & 1#10GRD - 3/4"C
L - G7	LOUVER	120V/1PH	---	---	1	TS	---	MUA1 - 26	2#10 & 1#10GRD - 3/4"C
DF - G1	LOW VELOCITY FAN	208V/3PH	1.5	---	---	30/3/1	F	MUA1 - 32,34,36	3#10 & 1#10GRD - 3/4"C
VEF - G1	VEHICLE EXHAUST FAN	E	7.5	---	---	60/3/1	F	MUA1 - 38,40,42	3#8 & 1#10GRD - 14"C
GIR - G1	GAS INFRARED HEATER	120V/1PH	---	---	3	TS	---	MUA1 - 12	2#10 & 1#10GRD - 3/4"C
GIR - G2	GAS INFRARED HEATER	120V/1PH	---	---	3	TS	---	MUA1 - 12	2#10 & 1#10GRD - 3/4"C
GIR - G3	GAS INFRARED HEATER	120V/1PH	---	---	3	TS	---	MUA1 - 12	2#10 & 1#10GRD - 3/4"C
GIR - G4	GAS INFRARED HEATER	120V/1PH	---	---	3	TS	---	MUA1 - 10	2#10 & 1#10GRD - 3/4"C
GIR - G5	GAS INFRARED HEATER	120V/1PH	---	---	3	TS	---	MUA1 - 10	2#10 & 1#10GRD - 3/4"C
GIR - G6	GAS INFRARED HEATER	120V/1PH	---	---	3	TS	---	MUA1 - 10	2#10 & 1#10GRD - 3/4"C
EF - G1	EXHAUST FAN	208V/3PH	2	---	---	30/3/1	F	MUA1 - 44.46.48	3#10 & 1#10GRD - 3/4"C
EF - G2	EXHAUST FAN	208V/3PH	1	---	---	30/3/1	F	MUA1 - 50.52.54	3#10 & 1#10GRD - 3/4"C
EF - G3	EXHAUST FAN	208V/3PH	1	---	---	30/3/1	F	MUA1 - 56,58,60	3#10 & 1#10GRD - 3/4"C
EF - G4	EXHAUST FAN	208V/3PH	---	0.09	---	SWITCH	WITH	LIGHTS	2#10 & 1#10GRD - 3/4"C
EF - G5	EXHAUST FAN	120V/1PH	---	0.09	---	SWITCH	WITH	LIGHTS	2#10 & 1#10GRD - 3/4"C
EF - G6	EXHAUST FAN	120V/1PH	---	0.055	---	SWITCH	WITH	LIGHTS	2#10 & 1#10GRD - 3/4"C
GWH G1	GAS WATER HEATER	120V/1PH	---	0.2	---	TS	---	MUA2 - 15	2#10 & 1#10GRD - 3/4"C
CP - G1	CIRCULATION PUMP	120V/1PH	---	0.2	---	TS	---	MUA2 - 17	2#10 & 1#10GRD - 3/4"C
OWP - 1	OIL/WATER PUMP	120V/1PH	---	2.1	---	TS	---	MUA2 - 5	2#10 & 1#10GRD - 3/4"C
PAD - 1	AIR DRYER	120V/1PH	---	1.6	---	TS (EP) (NOTE 6)	---	MUA2 - 7	2#10 & 1#10GRD - 3/4"C
PAC - 1	AIR COMPRESSOR	208V/3PH	---	---	46	100/3/3R	F	MUA2 - 9,11,13	3#4 & 1#8 GRD - 1-1/4"C
COP - 1	CARBON MONOXIDE CONTROL PANEL	120V/1PH	---	---	7	TS	---	MUA2 - 2	2#10 & 1#10GRD - 3/4"C

NOTES:
1. COORDINATE WITH MANUFACTURER'S CUTSHEETS OR NAMEPLATE DATA AND ADJUST OVERCURRENT PROTECTION AS NEEDED TO PROTECT EQUIPMENT PER MANUFACTURER'S RECOMMENDATIONS AND TO COMPLY WITH NEC AND ALL LOCAL CODES. COORDINATION SHALL BE DONE PRIOR TO BIDS AND ACCOUNTED FOR IN THE CONTRACTOR'S BID PRICE.
2. ALL DISCONNECTS SHALL BE HEAVY DUTY TYPE.
3. ALL FUSES SHALL BE SIZED PER NAMEPLATE DATA.
4. "NF" - NON-FUSED
5. "F" - FUSED
6. "TS" MANUAL MOTOR STARTER WITH THERMAL OVERLOAD ("W" - WEATHERPROOF) ("30-AMP" - 30-AMP RATED), ("EP" EXPLOSION PROOF 30 AMP RATED)
7. PROVIDE INTERCONNECTING RELAY SUCH THAT FAN IS CONTROLLED BY LIGHTING.
8. "WP" - WEATHERPROOF ENCLOSURE.
9. CONTRACTOR SHALL COORDINATE EXACT REQUIREMENTS AND LOCATIONS FOR ALL CIRCULATING PUMPS AND TIME CLOCKS WITH MECHANICAL CONTRACTOR PRIOR TO ROUGH-IN.
10. ROUTE ALL CIRCUITING FOR SHOWER CUTOFF VALVES THROUGH JAIL CONTROL SYSTEM. SEE JAIL CONTROL DRAWINGS.
11. FURNISH NEMA 5-20R RECEPTACLE AND CIRCUITING AS SHOWN ABOVE FOR THIS UNIT (LOCATED INSIDE VAULT AREA).

S|S&L ARCHITECTS
Montgomery | Dothan | Auburn | Huntsville | Pensacola
WWW.SSLARCH.COM | 256.285.1063

Rev.	Description	Date

Job Number 21112
Date NOVEMBER 1, 2024
Drawn By KRG, JBG
Checked By JBG

Project Title

HUNTSVILLE READINESS CENTER
5180 MOORE'S MILL ROAD
HUNTSVILLE AL, 35811

Sheet Title
UNIT SUPPLY / GPTB - MECHANICAL EQUIPMENT SCHEDULE

Sheet Number
GE3.3

Gunn & Associates, P.C.
Consulting Engineers
3102 Highway 14
Millbrook, AL 36054
Tel: 334.285.1273
1200 Providence Park, Suite 200
Birmingham, AL 35242
GA#22-071

ALABAMA REGISTERED
NO. 20431
PROFESSIONAL
11-01-24
ENGINEER
JOHN BARRY GRAY, P.E.

PAGING LEGEND

Ⓢ	SPEAKER, BACK CAN, SUPPORTS, BAFFLED CONNECTED TO AMPLIFIER ZONE.
ⓈH	WALL MOUNTED SPEAKER AND SUPPORTS. (WEATHERPROOF WHEN INDICATED)
—S—	CONDUIT AND CABLE AS REQUIRED.

PAGING SYSTEM NOTES

1. PAGING SYSTEM SHALL BE INSTALLED TO INCLUDE 1 ZONE OF PAGING.
2. THE PAGING SYSTEM SHALL BE SEPARATE FROM THE FIRE ALARM SYSTEM.
3. PROVIDE COMPLETE WITH AMPLIFIER.

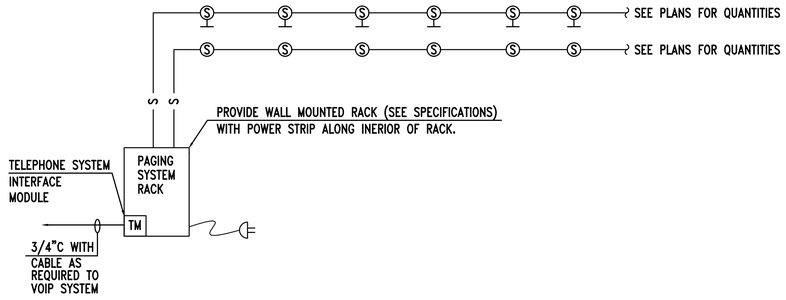

2 GE4.1 RISER DIAGAM - PAGING SYSTEM

NO SCALE

GENERAL NOTES:

1. COORDINATE EACH AUXILAIRY SYSTEM WITH THEIR CORRESPONDING RISER DIAGRAMS FOR ADDITIONAL REQUIREMENTS.
2. COORDINATE AND MOUNT COMMUNICATIONS OUTLETS WITHIN 6" OF CORRESPONDING POWER RECEPTACLES. ADJUST LOCATIONS AS REQUIRED TO GO ALONG WITH EXISTING RECEPTACLES.
3. COORDINATE WITH MILLWORK SHOP DRAWINGS PRIOR TO ROUGH-IN FOR EXACT RECEPTACLE LOCATIONS. ADJUST AS NEEDED.

SHEET NOTES:

1. PROVIDE 4' CLEAR BETWEEN WALL AND IT RACK.
2. PROVIDE DOOR SECURITY PER DETAIL 1 ON SHEET E6.2. DOOR SHALL BE COMBINATION ACCESS CONTROLLED, KEYPAD, AND INTERCOM. DOOR SECURITY CAMERAS, INTERCOM, KEYPADS, ETC. SHALL BE BY OWNER'S SECURITY SYSTEM CONTRACTOR UNDER SEPARATE CONTRACT.
3. PROVIDE RACEWAY AND JUNCTION BOX LAYOUT PER ROOM DETAILS SHEETS GE4.2 THROUGH GE4.13. DETAILS MAY BE OPPOSITE HAND FROM DRAWING ON THIS SHEET. CONTRACTOR SHALL REVERSE OR MIRROR INSTALLATION TO MATCH FIELD CONDITIONS ON NEW BUILDING DESIGN.
4. THIS AREA IS CLASSIFIED AS A CLASS I, DIVISION 2 HAZARDOUS AREA. PROVIDE DEVICES, CONDUIT, WIRING METHODS AND SEAL OFF FITTINGS AS REQUIRED BY ARTICLE 500 OF THE NATIONAL ELECTRICAL CODE (NFPA 70).
5. OWNER FURNISHED-CONTRACTOR INSTALLED TELE-POWER POLE. PROVIDE FOR NUMBER OF COMMUNICATIONS RUNS AS INDICATED. CONTRACTOR TO TERMINATE DATA CABLING TO COMMUNIATIONS OUTLETS ONCE FURNITURE IS INSTALLED.

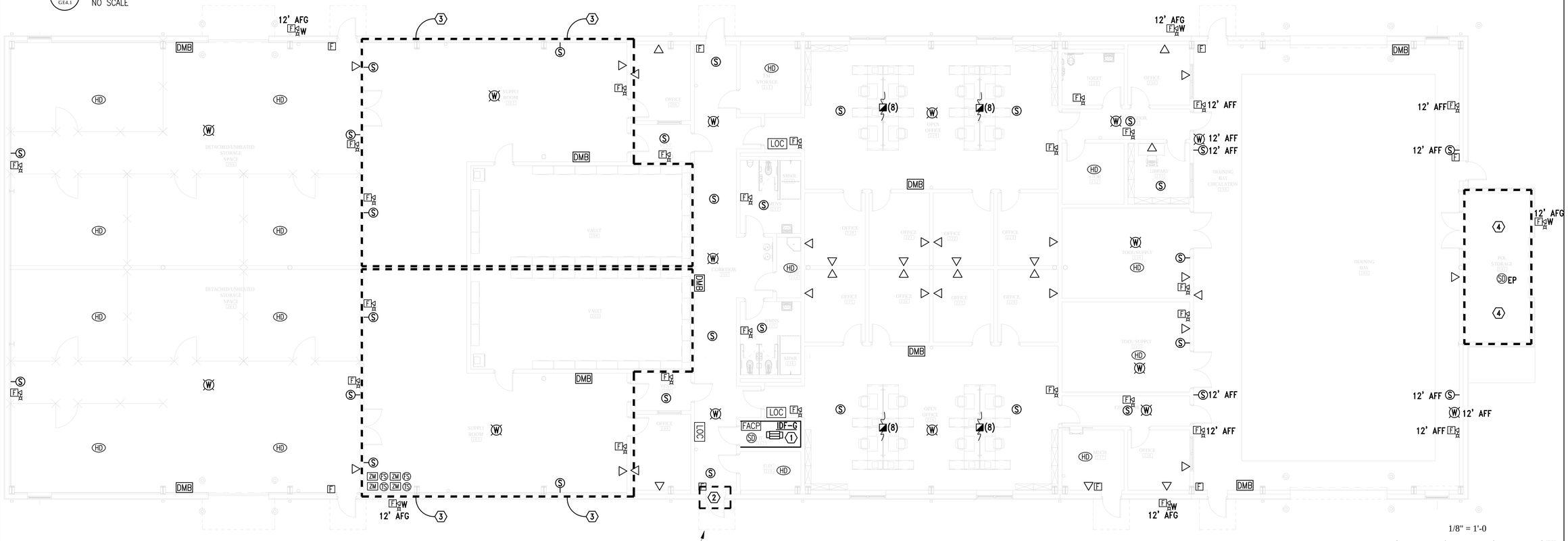

1/8" = 1'-0

8' 0 8 16 FT

GRAPHIC SCALE

1 GE4.1 FLOOR PLAN - UNIT SUPPLY / GPTB - AUXILIARY

SCALE: 1/8"=1'-0"

S|S&L ARCHITECTS
Montgomery | Dothan | Auburn | Huntsville | Pensacola
WWW.SSLARCH.COM | 256.285.1063

Rev.	Description	Date

Job Number 21112

Date NOVEMBER 1, 2024

Drawn By KRG, JBG

Checked By JBG

Project Title

HUNTSVILLE READINESS CENTER
5180 MOORE'S MILL ROAD
HUNTSVILLE AL, 35811

Sheet Title
FLOOR PLAN - UNIT SUPPLY / GPTB - AUXILIARY

Sheet Number
GE4.1

Gunn & Associates, P.C.
Consulting Engineers
3102 Highway 14, Millbrook, AL 36054, Tel: 334.285.1273
1200 Providence Park, Suite 200, Birmingham, AL 35242, GA#22-071

ALABAMA REGISTERED NO. 20431 PROFESSIONAL ENGINEER JOHN BARRY GRAVLEE 11-01-24

GENERAL NOTES:

1. THE PURPOSE OF THIS TYPICAL DESIGN IS TO PROVIDE THE STATES AND THE STATE-SELECTED ARCHITECTURAL & ENGINEERING FIRMS WITH A REFERENCE FOR TYPICAL INTRUSION DETECTION SYSTEM (IDS) INFRASTRUCTURE REQUIREMENTS TO SUPPORT IDS EQUIPMENT FOR THE ARMY NATIONAL GUARD.

2. THIS IDS INFRASTRUCTURE TYPICAL DESIGN IS INTENDED TO WORK IN CONJUNCTION WITH THE IDS EQUIPMENT TYPICAL DESIGNS.

3. THE IDS INFRASTRUCTURE PLAN SHOULD BE COORDINATED WITH THE STATE ARMY NATIONAL GUARD ESS TEAM TO ENSURE PROPER PLACEMENT AND PATHWAYS TO SUPPORT IDS EQUIPMENT.

4. DESIGNERS SHOULD ACCOUNT FOR UNIT EQUIPMENT, SUCH AS WEAPONS RACKS AND CABINETS, WHEN THE INTRUSION DETECTION SYSTEM EQUIPMENT INFRASTRUCTURE IS SPECIFIED. GUIDANCE IS PROVIDED WITHIN THIS TYPICAL DESIGN, HOWEVER THE TYPICAL DESIGNS FOR THE ARNG-APPROVED, STATE-SELECTED EQUIPMENT MAY PROVIDE ADDITIONAL INFORMATION.

POWER

1. A DEDICATED 120 VAC 20 AMP CIRCUIT WILL BE PROVIDED IN EACH VAULT FOR THE SECURITY PANELS. THIS CIRCUIT WILL BE CONNECTED TO THE EMERGENCY CIRCUIT (IF AVAILABLE) AND WILL BE INDEPENDENT FROM THE LIGHTING, HVAC, RECEPTACLES, OR OTHER SHARED POWER CIRCUITS.

2. THE LOCKING POWER RECEPTACLE (SEE SHEET FAB100) IS INTENDED FOR THE SOLE USE OF ESS PERSONNEL TO PERFORM MAINTENANCE FUNCTIONS AND NOT TO BE USED DEHUMIDIFIERS OR OTHER VAULT EQUIPMENT.

CONDUIT

1. ENSURE ALL CONDUIT AND FITTINGS ARE INSTALLED IAW NATIONAL ELECTRICAL CODE AND ARMY REGULATION 190-11 (PHYSICAL SECURITY OF ARMS, AMMUNITION, AND EXPLOSIVES) PARAGRAPH 3-6 (K). ALL CONDUIT RUNS IN ARMS VAULTS AND SUPPLY ROOMS WILL UTILIZE EMT CONDUIT. CONDUIT RUNS WHICH EXIT THESE PROTECTED AREAS WILL UTILIZE IMC. CONDUIT RUNS ON THE EXTERIOR OF THE FACILITY WILL BE RIGID CONDUIT.

2. WHERE POSSIBLE CONDUIT SHOULD BE RUN IN-WALL OR ABOVE THE FINISHED CEILING.

3. PER NEC STANDARDS, ALL 90° CONDUIT BENDS MUST BE A MINIMUM BEND RADIUS OF 6 TIMES THE CONDUIT INSIDE DIAMETER.

4. COMPRESSION FITTINGS WILL BE USED ALONG WITH PLASTIC-THROATED CONNECTORS WILL BE USED.

JUNCTION BOXES

1. ALL JUNCTION BOXES WILL BE INSTALLED WITH PULL STRINGS AND COVERS WITH SECURITY SCREWS.

2. OCTAGON JUNCTION BOXES FOR VOLUMETRIC SENSORS WILL BE LOCATED A MINIMUM OF 120 INCHES FROM THE VAULT DOOR AND A MINIMUM OF 12 INCHES AWAY FROM FLUORESCENT LIGHTING. VOLUMETRIC SENSORS REQUIRE LINE OF SIGHT TO THE VAULT DOOR, THEREFORE PLANNERS SHOULD CONSIDER ANY OBSTRUCTIONS WHICH MAY PREVENT PROPER OPERATION.

SUPPLY ROOM EXTERIOR ENTRANCES

1. CERTAIN SUPPLY ROOM EXTERIOR ENTRANCEWAYS MAY CREATE FALSE ALARMS DUE TO ENVIRONMENTAL FACTORS. DOUBLE DOORS AND ROLL-UP DOORS ARE SUSCEPTIBLE TO MOVEMENT WHICH MAY TRIGGER DOOR CONTACTS OR BALANCED MAGNETIC SWITCHES.

2. WHERE DOUBLE DOORS ARE UTILIZED, PROVIDE SUFFICIENT CONDUIT FROM THE SUPPLY ROOM JUNCTION BOX ABOVE THE SUPPLY ROOM ENCLOSURE LOCATION TO THE EXTERIOR DOORS IN THE SAME MANNER AS THE EXTERIOR SUPPLY ROOM SINGLE DOORS IDENTIFIED WITHIN THIS TYPICAL DESIGN.

3. WHERE ROLL-UP DOORS ARE UTILIZED, PROVIDE ADDITIONAL 1/2-INCH CONDUIT AND OCTAGON JUNCTION BOX IF THE DISTANCE FROM THE FIRST OCTAGON JUNCTION BOX EXCEEDS 26 FEET OR DOES NOT HAVE LINE OF SIGHT TO THE ROLL-UP DOOR. OCTAGON JUNCTION BOXES WILL BE LOCATED A MINIMUM OF 120 INCHES FROM THE ROLL-UP DOOR AND A MINIMUM OF 12 INCHES AWAY FROM FLUORESCENT LIGHTING.

SS&L ARCHITECTS
Montgomery | Dothan | Auburn | Huntsville | Pensacola
WWW.SSLARCH.COM | 256.285.1063

Rev.	Description	Date

Job Number 21112
Date NOVEMBER 1, 2024
Drawn By KRG, JBG
Checked By JBG

Project Title

HUNTSVILLE READINESS CENTER
5180 MOORE'S MILL ROAD
HUNTSVILLE AL, 35811

Sheet Title
UNIT SUPPLY VAULT DETAILS

Sheet Number
GE4.2

Gunn & Associates, P.C.
Consulting Engineers
3102 Highway 14
Millbrook, AL 36054
Tel: 334.285.1273
1200 Providence Park, Suite 200
Birmingham, AL 35242
GA#22-071

ALABAMA REGISTERED
NO. 20431
PROFESSIONAL
11-01-24
ENGINEER
JOHN BARRY GRAILEE

LIST OF MATERIAL

ITEM NO.	QTY.	U/M	DESCRIPTION	MANUFACTURER	PART NO.	REMARKS
			CONDUIT AND ACCESSORIES			
R1	A/R	FT	CONDUIT, 1/2", EMT, 10'	ALLIED		USED WITHIN PROTECTED AREAS, PER AR 190-11 PARA. 3-6
R2	A/R	FT	CONDUIT, 3/4 " EMT, 10'	ALLIED		USED WITHIN PROTECTED AREAS, PER AR 190-11 PARA. 3-6
R3	A/R	FT	CONDUIT, 1", EMT, 10'	ALLIED		USED WITHIN PROTECTED AREAS, PER AR 190-11 PARA. 3-6
R4	A/R	FT	CONDUIT, 1/2", IMC, 10'	ALLIED		USED OUTSIDE OF PROTECTED AREAS, INSIDE THE STRUCTURE, PER AR 190-11 PARA. 3-6
R5	A/R	FT	CONDUIT, 3/4 " IMC, 10'	ALLIED		USED OUTSIDE OF PROTECTED AREAS, INSIDE THE STRUCTURE, PER AR 190-11 PARA. 3-6
R6	A/R	FT	CONDUIT, 1", IMC, 10'	ALLIED		USED OUTSIDE OF PROTECTED AREAS, INSIDE THE STRUCTURE, PER AR 190-11 PARA. 3-6
R7	A/R	FT	CONDUIT, 1/2", RIGID, 10'	ALLIED		USED OUTSIDE OF THE STRUCTURE, PER AR 190-11 PARA. 3-6
R8	A/R	FT	CONDUIT, 3/4 " RIGID, 10'	ALLIED		USED OUTSIDE OF THE STRUCTURE, PER AR 190-11 PARA. 3-6
R9	A/R	FT	CONDUIT, 1", RIGID, 10'	ALLIED		USED OUTSIDE OF THE STRUCTURE, PER AR 190-11 PARA. 3-6
R10	27	EA	CONNECTOR, COMPRESSION TYPE, 1/2", INSULATED, EMT	RACO	2902-8	
R11	12	EA	CONNECTOR, COMPRESSION TYPE, 3/4", INSULATED, EMT	RACO	2903-8	
R12	41	EA	CONNECTOR, COMPRESSION TYPE, 1", INSULATED, EMT	RACO	2904-8	
R13	A/R	EA	COUPLING, COMPRESSION TYPE, 1/2", INSULATED, EMT	RACO	2922-8	
R14	A/R	EA	COUPLING, COMPRESSION TYPE, 3/4", INSULATED, EMT	RACO	2923-8	
R15	A/R	EA	COUPLING, COMPRESSION TYPE, 1", INSULATED, EMT	RACO	2924-8	
R16	A/R	EA	STRAP, ONE HOLE, 1/2"	CROUSE-HINDS	200	
R17	A/R	EA	STRAP, ONE HOLE, 3/4"	CROUSE-HINDS	201	
R18	A/R	EA	STRAP, ONE HOLE, 1"	CROUSE-HINDS	202	
R19	A/R	EA	CABLE FITTING, 1/2"	CROUSE-HINDS	CG50-350	SUPPLY ROOM BMS
R20	A/R	EA	STEEL LOCKNUT, 1/2"	ARLINGTON	401	USE WITH CG CABLE FITTING
R21	13	EA	JUNCTION BOX, 4" X 4" X 2 1/8", 1/2" AND 3/4" COMBINATION KNOCKOUTS	CROUSE-HINDS	TP403	
R22	19	EA	JUNCTION BOX, 4" X 4" X 2 1/8", 1" KNOCKOUTS, SIDES ONLY	CROUSE-HINDS	TP436	
R23	2	EA	4" SQUARE EXTENSION RING	CROUSE-HINDS	TP428	
R24	6	EA	OCTAGON BOX, 3 1/2", 1 1/2" DEEP	PLATT	52058	PIR MOUNT
R25	A/R	EA	OCTAGON EXTENSION RING	PLATT	52060	PIR MOUNT
R26	3	EA	SWITCH BOX, 3 1/2" X 1 31/32" X 3 1/2" DEEP, WITH KNOCKOUTS	RACO	695	REMOTE STATUS INDICATOR
R27	1	EA	JUNCTION BOX, 4 11/16" X 4 11/16" X 2 1/8", (4) 1" AND (4) 3/4" SIDE KNOCKOUTS, (2) 1/2" AND (2) 3/4" KNOCKOUTS	RACO	265	
R28	12	EA	4" SQUARE FLAT COVER FOR JUNCTION BOX	CROUSE-HINDS	TP472	
R29	A/R	EA	4" SQUARE COVER WITH 1/2" KNOCKOUT	CROUSE-HINDS	TP478	
R30	1	EA	BOX COVER, 4-11/16" SQUARE BOX COVER	RACO	832	
R31	A/R	EA	SINGLE GANG WEATHERPROOF BLANK COVER WITH MOUNTING SCREWS	CROUSE-HINDS	TP7292	REMOTE STATUS INDICATOR COVER
R32	8	EA	3 1/2" COVER FOR OCTAGON BOX, SINGLE KNOCKOUT	RACO	703	
R33	3	EA	4" SQUARE COVER TO SINGLE GANG MUD RING, RAISED 1/2"	CROUSE-HINDS	TP484	OUTLET IN VAULT
R34	A/R	EA	REDUCER, CONDUIT, 3/4" TO 1/2"	CROUSE-HINDS	251	
R35	A/R	EA	CONDUIT OUTLET BODIES, 1/2", T STYLE	CROUSE-HINDS	T15 MTC	
R36	A/R	EA	CONDUIT OUTLET BODIES, 1/2", LR STYLE	CROUSE-HINDS	LR15 MTC	
R37	A/R	EA	CONDUIT OUTLET BODIES, 1/2", LL STYLE	CROUSE-HINDS	LL15 MTC	
R38	A/R	EA	SWITCH BOX, 3" X 2", 2" DEEP, WITH KNOCKOUTS	RACO	420	FOR SINGLE OUTLET
R39	A/R	EA	1/2" CHASE NIPPLE	RACO	1662	
R40	A/R	EA	3/4" OFFSET NIPPLE	RACO	1453	
R41	A/R	EA	REDUCER, 1" TO 1/2"	CROUSE-HINDS	252	
R42	A/R	EA	REDUCING WASHER, 1" TO 1/2"	GRAINGER	3LV41	
R43	2	EA	CONNECTOR, 1/2" STRAIGHT, INSULATED, RAINTIGHT	CROUSE-HINDS	1650RT	
R44	2	EA	CONNECTOR, 3/4" STRAIGHT, INSULATED, RAINTIGHT	CROUSE-HINDS	1651RT	
R45	A/R	EA	CONNECTOR, 1", STRAIGHT, INSULATED, RAINTIGHT	CROUSE-HINDS	1652RT	
			ENCLOSURES AND ACCESSORIES			
S1	3	EA	WIREWAY, 4" X 4" X 24", 16 GAUGE	HOFFMAN	F44T124GVP	COMES WITH SCREWS AND WASHERS
S2	6	EA	CLOSURE PLATE FOR WIREWAY	HOFFMAN	F44GCP	COMES WITH SCREWS AND WASHERS
			MISCELLANEOUS MATERIALS			
U1	3	EA	COVER, SINGLE OUTLET, LOCKING	INTERMATIC	WP1010MXD	
U2	A/R	EA	ANCHOR, CONCRETE, LEAD EXPANSION TYPE, 1/4"-20	FASTENAL	51006	
U3	6	EA	SCREW, PAN HEAD SECURITY TYPE, #6, STAINLESS STEEL	FASTENAL	SP0120012SS0000	
U4	A/R	EA	BOLT, 1/4" X 1", HEX HEAD, STAINLESS STEEL	FASTENAL	70005	
U5	A/R	EA	WASHER 1/4", STAINLESS STEEL	FASTENAL	11128373	
U6	A/R	EA	LOCK WASHER, 1/4", STAINLESS STEEL	FASTENAL	173192	
U7	3	EA	ELECTRICAL OUTLET, SINGLE GANG	LEVITON	5015-W	

SS&L ARCHITECTS
Montgomery | Dothan | Auburn | Huntsville | Pensacola
WWW.SSLARCH.COM | 256.285.1063

Rev.	Description	Date

Job Number 21112
Date NOVEMBER 1, 2024
Drawn By KRG, JBG
Checked By JBG

Project Title

HUNTSVILLE READINESS CENTER
5180 MOORE'S MILL ROAD
HUNTSVILLE AL, 35811

Sheet Title
UNIT SUPPLY VAULT DETAILS

Sheet Number
GE4.3

Gunn & Associates, P.C.
Consulting Engineers
3102 Highway 14
Millbrook, AL 36054
Tel: 334.285.1273
1200 Providence Park, Suite 200
Birmingham, AL 35242
GA#22-071

ALABAMA REGISTERED
NO. 20431
PROFESSIONAL
11-01-24
ENGINEER
JOHN BARRY GAVLEE

SHEET NOTES:

1. PHYSICAL LOCATION OF JUNCTION BOXES TO BE DETERMINED IN ACCORDANCE WITH ARNG POLICIES AND STATE ELECTRONIC SECURITY SYSTEM TEAM. CONTACT OWNER PRIOR TO ROUGH-IN.
2. SEE DETAILS ON SHEET GE4.9.
3. SEE DETAILS ON SHEET GE4.11.

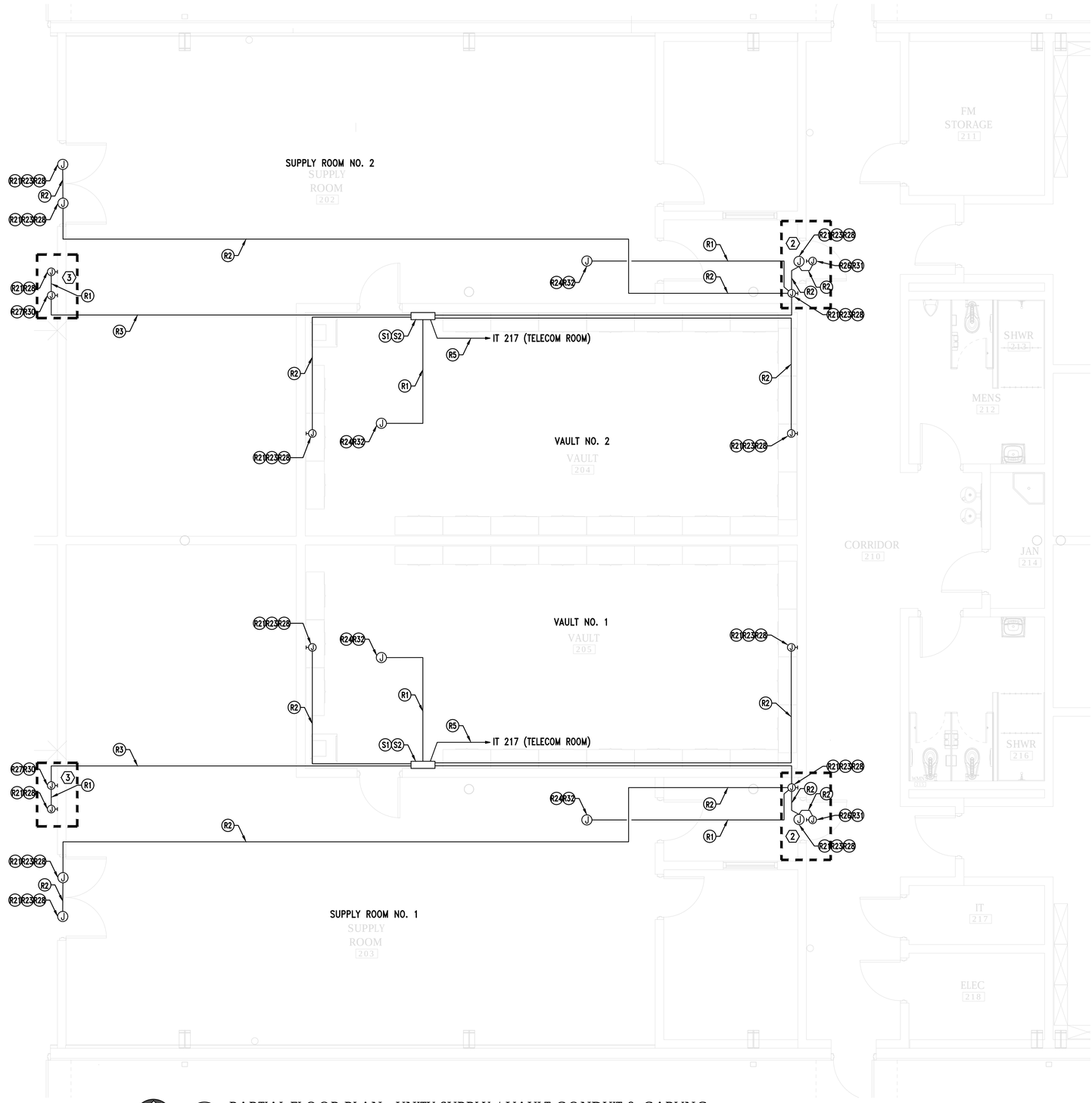

1 GE4.4 PARTIAL FLOOR PLAN - UNITY SUPPLY / VAULT CONDUIT & CABLING

SCALE: 1/4"=1'-0"

1/4" = 1'-0

4' 0 4 8 FT.

GRAPHIC SCALE

S|S&L ARCHITECTS
Montgomery | Dothan | Auburn | Huntsville | Pensacola
WWW.SSLARCH.COM | 256.285.1063

Gunn & Associates, P.C.
Consulting Engineers
3102 Highway 14
Millbrook, AL 36054
Tel: 334.285.1273
1200 Providence Park, Suite 200
Birmingham, AL 35242
GA#22-071

ALABAMA REGISTERED
NO. 20431
PROFESSIONAL
ENGINEER
JOHN BARRY GRAILEE
11-01-24

Rev.	Description	Date

Job Number 21112

Date NOVEMBER 1, 2024

Drawn By KRG, JBG

Checked By JBG

Project Title

HUNTSVILLE READINESS CENTER
5180 MOORE'S MILL ROAD
HUNTSVILLE AL, 35811

Sheet Title
UNIT SUPPLY
VAULT DETAILS

Sheet Number
GE4.4

LEGEND:

DENOTES MATERIAL - ITEM NUMBER

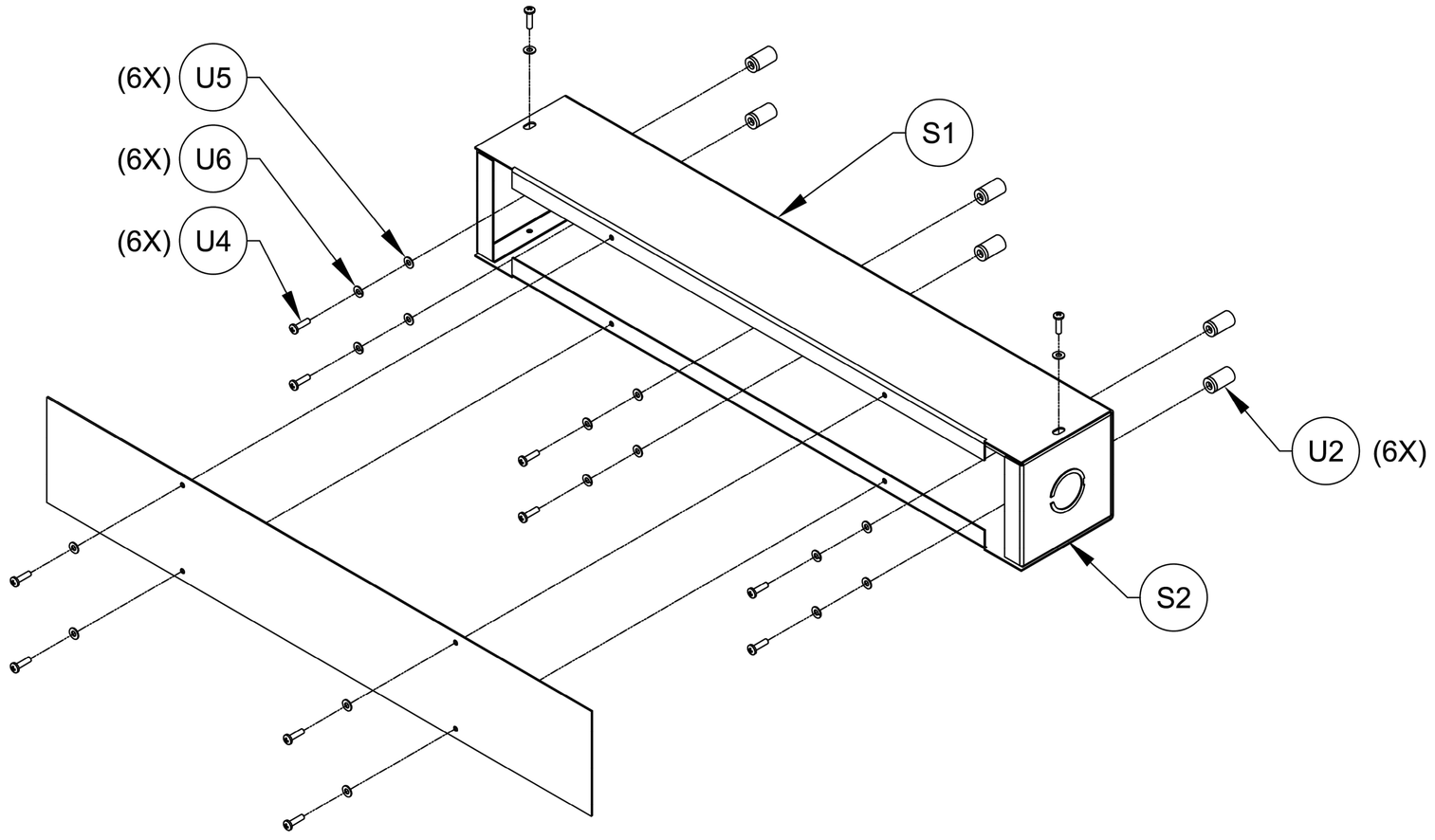

1 GE4.5 FABRICATION AND ASSEMBLY DETAILS VAULT WIREWAY

N.T.S

S|S&L ARCHITECTS
Montgomery | Dothan | Auburn | Huntsville | Pensacola
WWW.SSLARCH.COM | 256.285.1063

Rev.	Description	Date

Job Number 21112

Date NOVEMBER 1, 2024

Drawn By KRG, JBG

Checked By JBG

Project Title

HUNTSVILLE READINESS CENTER
5180 MOORE'S MILL ROAD
HUNTSVILLE AL, 35811

Sheet Title
UNIT SUPPLY
VAULT DETAILS

Sheet Number
GE4.5

Gunn & Associates, P.C.
Consulting Engineers
3102 Highway 14
Millbrook, AL 36054
Tel: 334.285.1273
1200 Providence Park, Suite 200
Birmingham, AL 35242
GA#22-071

ALABAMA REGISTERED
No. 20431
PROFESSIONAL
11-01-24
ENGINEER
JOHN BARRY GRAVLEE

LEGEND:

DENOTES MATERIAL - ITEM NUMBER

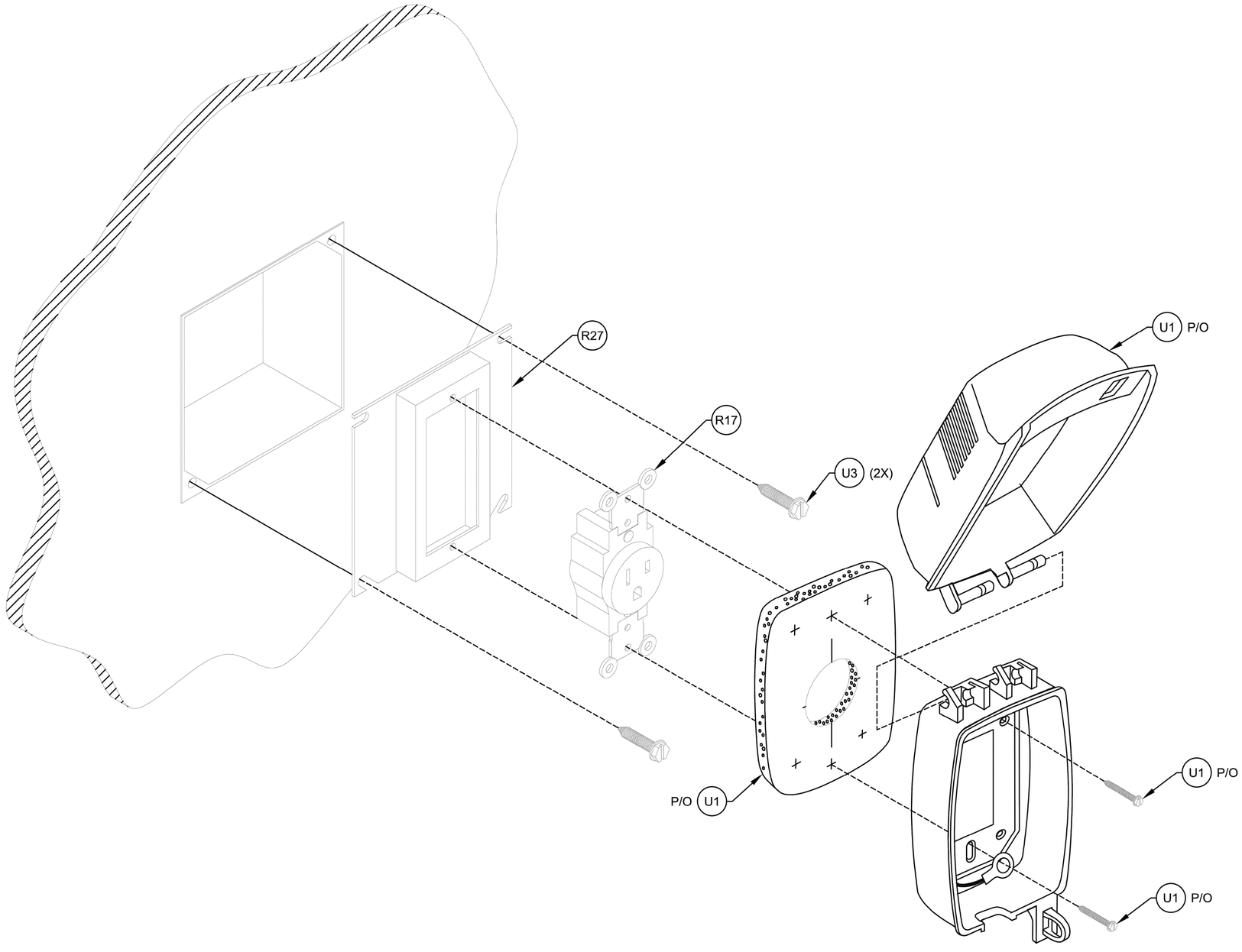

1 GE4.12 FABRICATION AND ASSEMBLY DETAILS ELECTRICAL OUTLET

N.T.S

S|S&L ARCHITECTS
Montgomery | Dothan | Auburn | Huntsville | Pensacola
WWW.SSLARCH.COM | 256.285.1063

Rev.	Description	Date

Job Number 21112

Date NOVEMBER 1, 2024

Drawn By KRG, JBG

Checked By JBG

Project Title

HUNTSVILLE READINESS CENTER
5180 MOORE'S MILL ROAD
HUNTSVILLE AL, 35811

Sheet Title
UNIT SUPPLY
VAULT DETAILS

Sheet Number
GE4.6

Gunn & Associates, P.C.
Consulting Engineers
3102 Highway 14
Millbrook, AL 36054
Tel: 334.285.1273
1200 Providence Park, Suite 200
Birmingham, AL 35242
GA#22-071

ALABAMA REGISTERED NO. 20431 PROFESSIONAL ENGINEER JOHN BARRY GRAVLEE
11-01-24

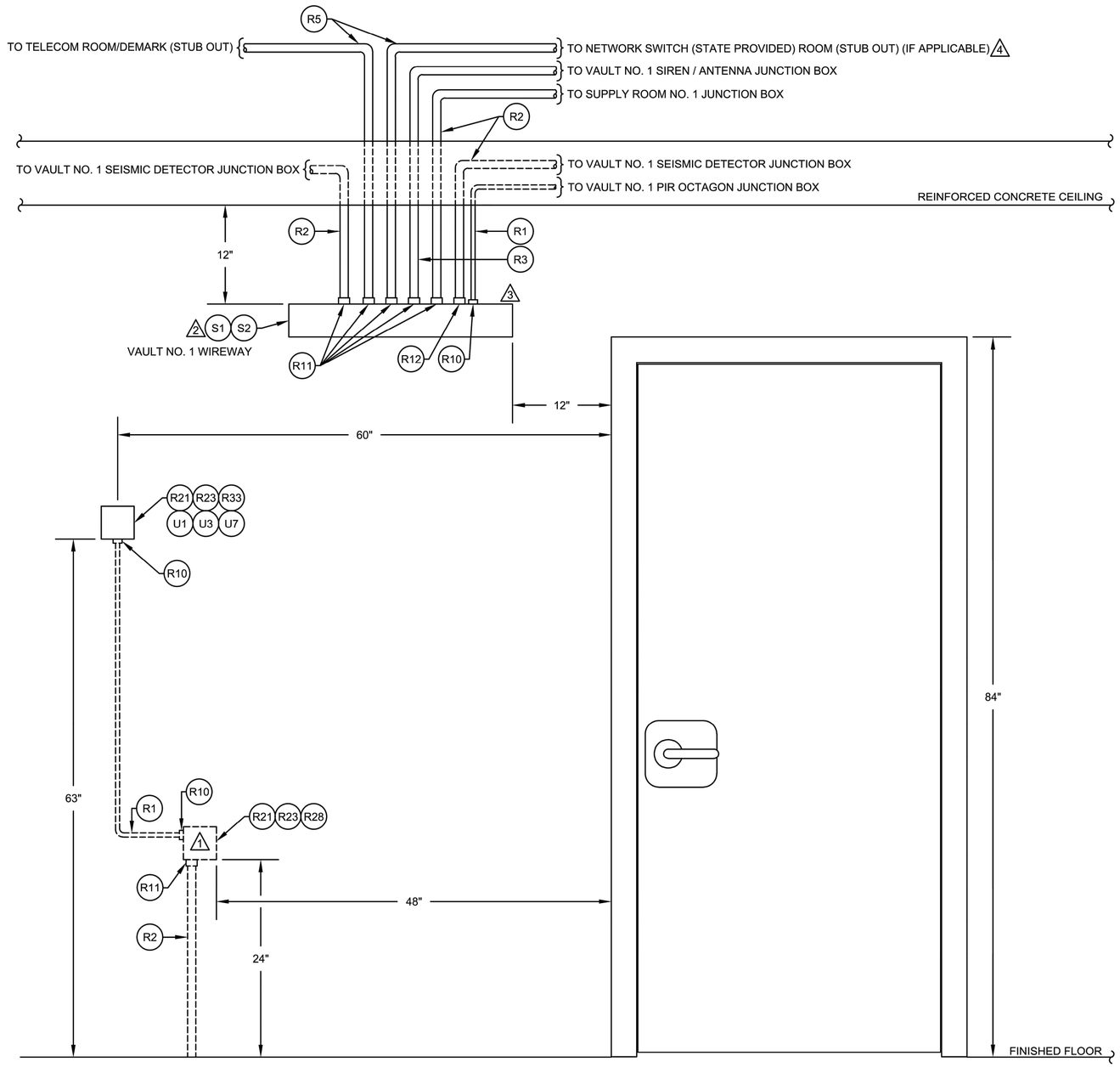

1 GE4.7 TYPICAL VAULT 1 AND VAULT 2 EQUIPMENT ARRANGEMENT SECURE SIDE OF VAULT DOOR

N.T.S

NOTES:

1. DEDICATED 120 VAC/20A CIRCUIT CONNECTED TO EMERGENCY POWER CIRCUIT (IF AVAILABLE). AC POWEI PROVIDED BY STATE. PRINT PANEL AND CIRCUIT BREAKER INFORMATION ON COVER.
2. WIREWAY IS SURFACE MOUNTED TO WALL. SEE SHEET GE4.5 FOR DETAILS.
3. MINIMUM 4" OF OPEN SPACE FROM THE TOP-RIGHT EDG OF WIRE WAY TO THE VAULT PIR CONDUIT CONNECTOR
4. CONDUIT SHOULD ONLY BE ADDED IF DEMARK AND NETWORK SWITCH ARE NOT COLLOCATED.
5. ALL JUNCTION BOXES WILL HAVE MOUNTING SURFACES FLUSH TO FINISHED WALL SURFACE.
6. CONDUIT DETAILS ARE REPRESENTATIONAL OF THE INTENT TO PROVIDE INDIVIDUAL PATHWAYS UTILIZING THE POURED VAULT OR IN-WALL CONSTRUCTION TO CONCEAL INTRUSION DETECTION SYSTEM CONDUIT.

LEGEND:

DENOTES MATERIAL - ITEM NUMBER

Gunn & Associates, P.C.
Consulting Engineers
3102 Highway 14
Millbrook, AL 36054
Tel: 334.285.1273
1200 Providence Park, Suite 200
Birmingham, AL 35242
GA#22-071

S|S&L ARCHITECTS
Montgomery | Dothan | Auburn | Huntsville | Pensacola
WWW.SSLARCH.COM | 256.285.1063

Rev.	Description	Date

Job Number: 21112
Date: NOVEMBER 1, 2024
Drawn By: KRG, JBG
Checked By: JBG
Project Title

HUNTSVILLE READINESS CENTER
5180 MOORE'S MILL ROAD
HUNTSVILLE AL, 35811

Sheet Title: UNIT SUPPLY VAULT DETAILS

Sheet Number: GE4.7

ALABAMA REGISTERED NO. 20431 PROFESSIONAL ENGINEER JOHN BARRY GRAVLEE
11-01-24

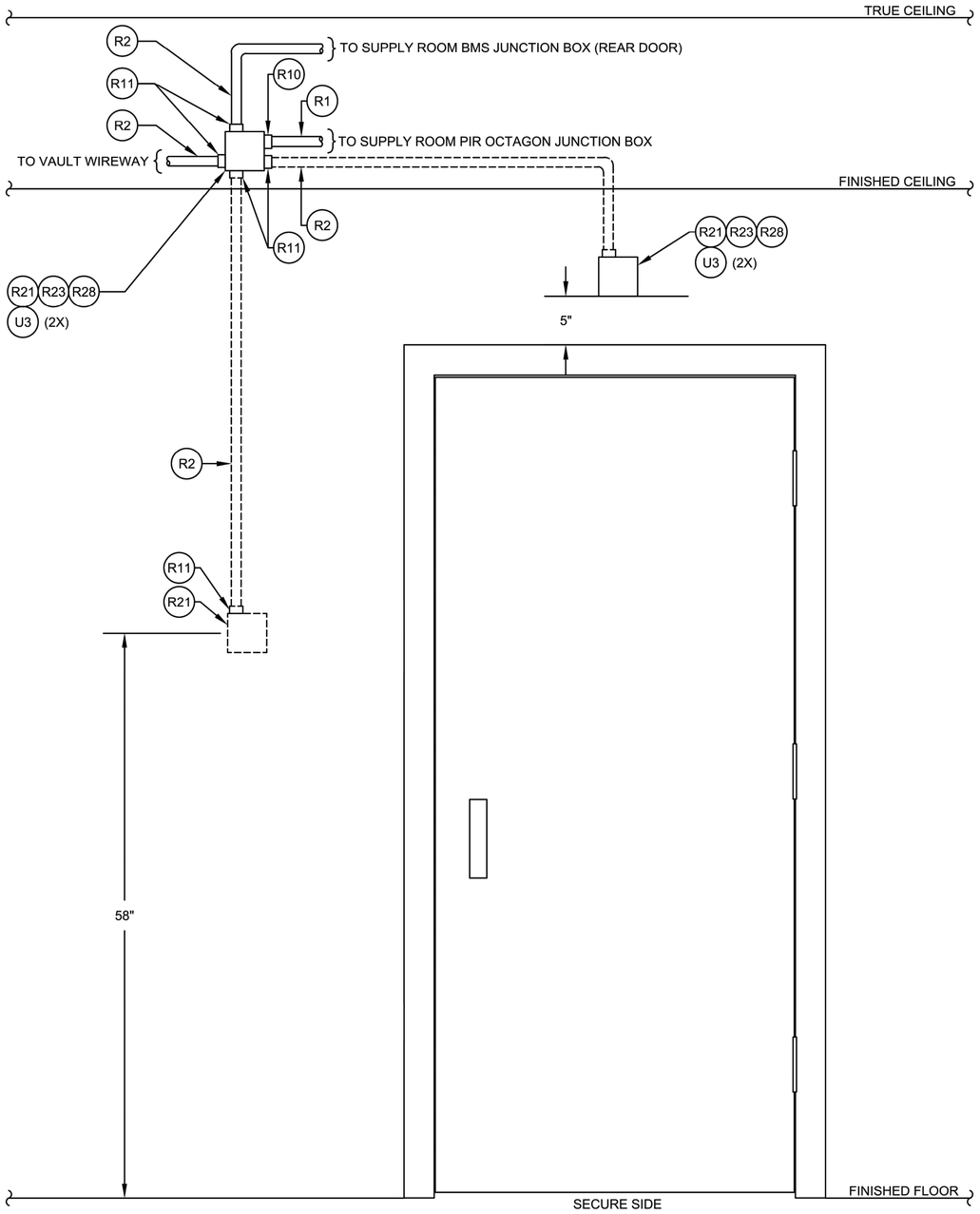

1 GE4.8 TYPICAL SUPPLY RM 1 &2 EQUIPMENT ARRANGEMENT SECURE SIDE OF DOOR
N.T.S

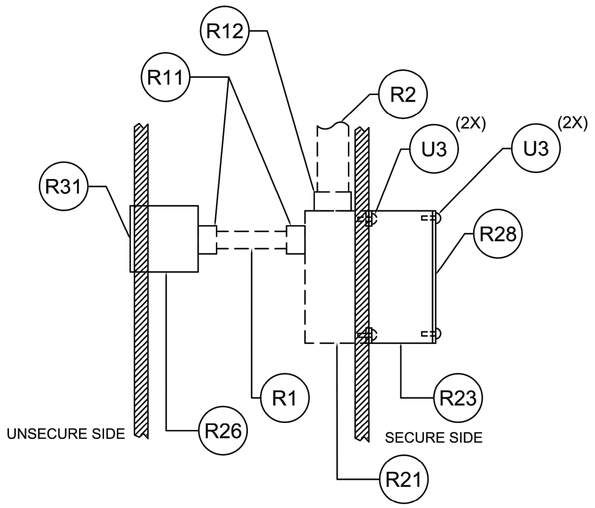

SUPPLY ROOM BMS/RSI
IN WALL DETAIL

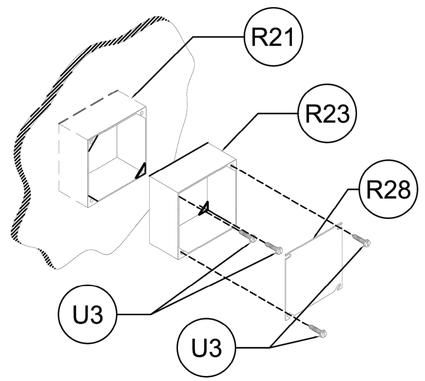

JUNCTION BOX/EXTENSION RING DETAIL

NOTES:

1. ALL JUNCTION BOXES WILL HAVE MOUNTING SURFACES FLUSH TO FINISHED WALL SURFACE.
2. CONDUIT DETAILS ARE REPRESENTATIONAL OF THE INTENT TO PROVIDE INDIVIDUAL PATHWAYS UTILIZING THE POURED VAULT OR IN-WALL CONSTRUCTION TO CONCEAL INTRUSION DETECTION SYSTEM CONDUIT.

LEGEND:

DENOTES MATERIAL - ITEM NUMBER

Gunn & Associates, P.C.
Consulting Engineers
3102 Highway 14
Millbrook, AL 36054
Tel: 334.285.1273
1200 Providence Park, Suite 200
Birmingham, AL 35242
GA#22-071

S|S&L ARCHITECTS
Montgomery | Dothan | Auburn | Huntsville | Pensacola
WWW.SSLARCH.COM | 256.285.1063

Rev.	Description	Date

Job Number: 21112
Date: NOVEMBER 1, 2024
Drawn By: KRG, JBG
Checked By: JBG
Project Title:

HUNTSVILLE READINESS CENTER
5180 MOORE'S MILL ROAD
HUNTSVILLE AL, 35811

Sheet Title: UNIT SUPPLY VAULT DETAILS

Sheet Number: GE4.8

ALABAMA REGISTERED NO. 20431 PROFESSIONAL 11-01-24 ENGINEER JOHN BARRY GRAVLEE

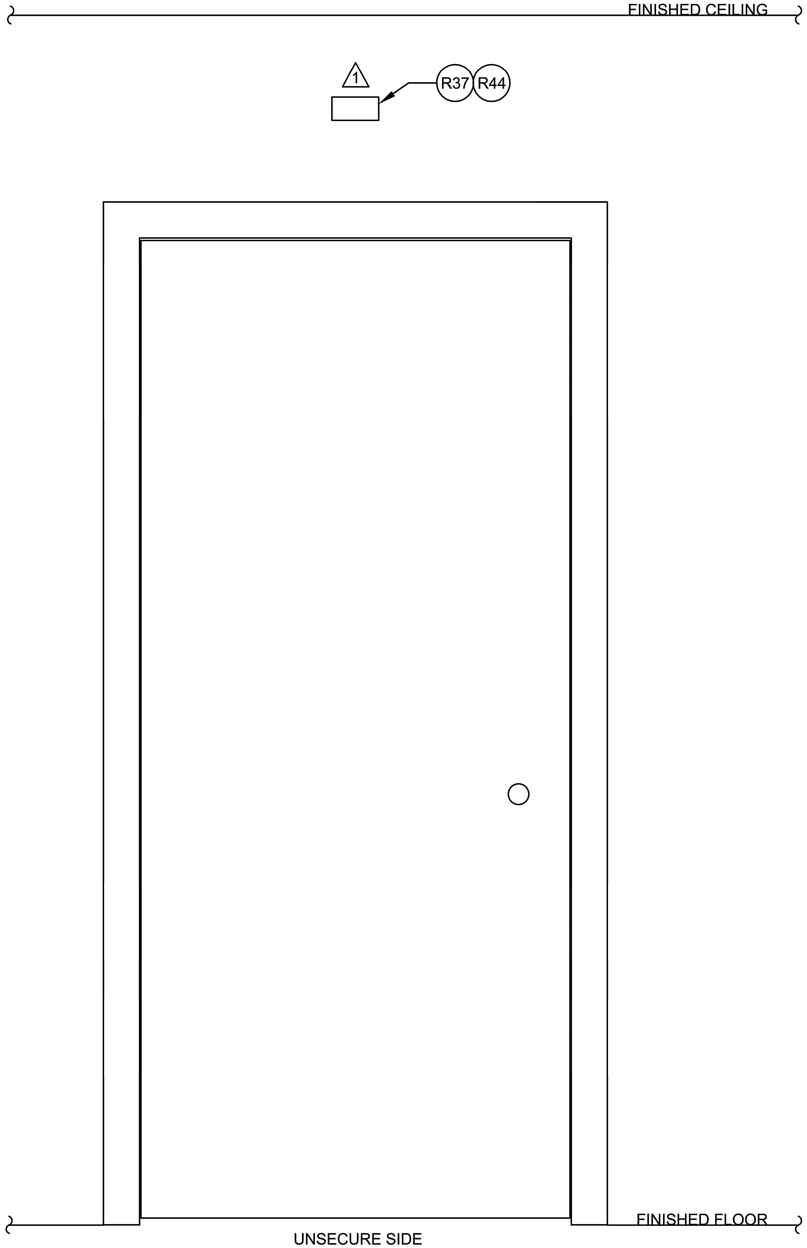

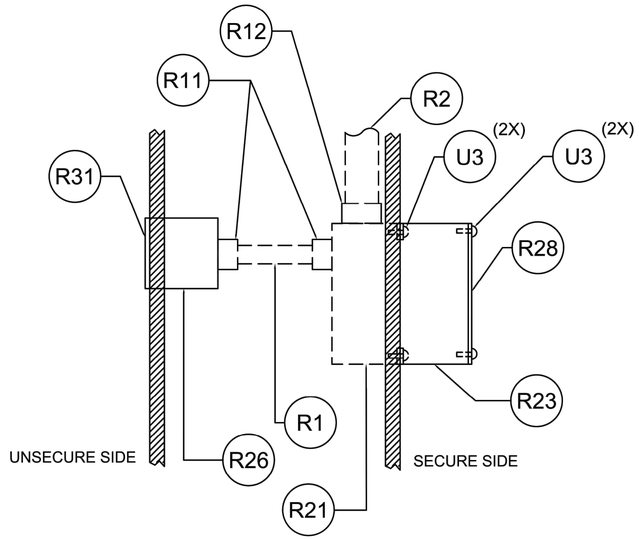

REMOTE STATUS INDICATOR
IN-WALL DETAIL

NOTES:

1. CENTER JUNCTION BOX ABOVE THE DOOR FRAME. SEE REMOTE STATUS INDICATOR IN WALL DETAIL.
2. ALL CONDUIT WILL BE EMBEDDED WITHIN WALL. JUNCTION BOXES WILL BE MOUNTED FLUSH TO THE FINISHED SURFACE.

LEGEND:

DENOTES MATERIAL - ITEM NUMBER

1 / GE4.9 TYPICAL SUPPLY ROOM 1 & 2 EQUIPMENT ARRANGEMENT SECURE SIDE OF SUPPLY ROOM
N.T.S

SS&L ARCHITECTS
Montgomery | Dothan | Auburn | Huntsville | Pensacola
WWW.SSLARCH.COM | 256.285.1063

Rev.	Description	Date

Job Number: 21112
Date: NOVEMBER 1, 2024
Drawn By: KRG, JBG
Checked By: JBG
Project Title:

HUNTSVILLE READINESS CENTER
5180 MOORE'S MILL ROAD
HUNTSVILLE AL, 35811

Sheet Title: UNIT SUPPLY VAULT DETAILS

Sheet Number: GE4.9

Gunn & Associates, P.C.
Consulting Engineers
3102 Highway 14, Millbrook, AL 36054, Tel: 334.285.1273
1200 Providence Park, Suite 200, Birmingham, AL 35242
GA#22-071

ALABAMA REGISTERED NO. 20431 PROFESSIONAL ENGINEER JOHN BARRY GRAVLEE 11-01-24

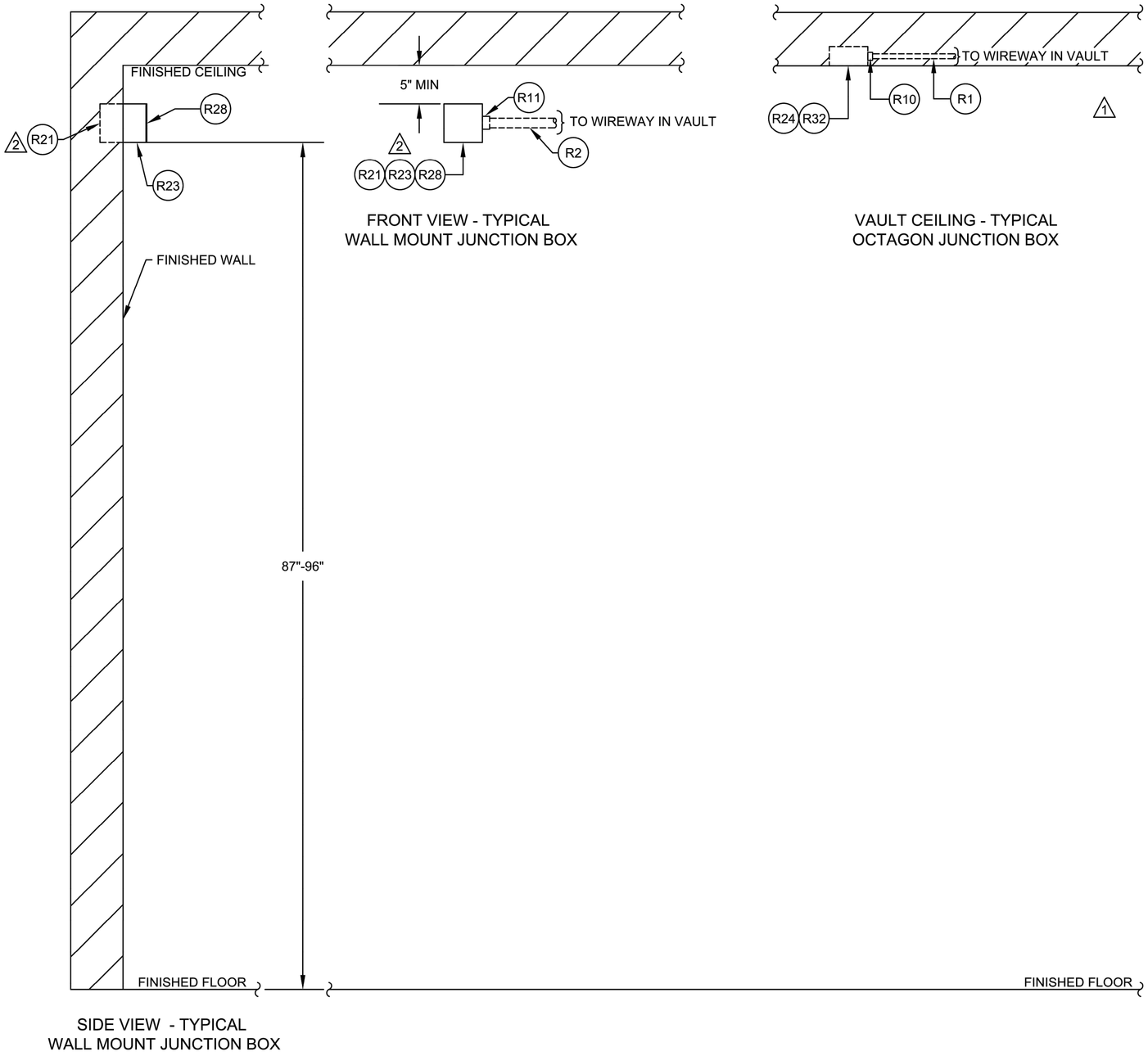

SIDE VIEW - TYPICAL
WALL MOUNT JUNCTION BOX

FRONT VIEW - TYPICAL
WALL MOUNT JUNCTION BOX

VAULT CEILING - TYPICAL
OCTAGON JUNCTION BOX

NOTES:

1. ALL CONDUIT EMBEDDED WITHIN WALL. BOX FACES TO BE FLUSH WITH FINISHED SURFACE.

LEGEND:

DENOTES MATERIAL - ITEM NUMBER

1 / GE4.10 TYPICAL ELEVATIONS VAULT 1 & 2 DEVICE INFRASTRUCTURE
N.T.S

Gunn & Associates, P.C.
Consulting Engineers
3102 Highway 14
Millbrook, AL 36054
Tel: 334.285.1273
1200 Providence Park, Suite 200
Birmingham, AL 35242
GA#22-071

S|S&L ARCHITECTS
Montgomery | Dothan | Auburn | Huntsville | Pensacola
WWW.SSLARCH.COM | 256.285.1063

Rev.	Description	Date

Job Number: 21112
Date: NOVEMBER 1, 2024
Drawn By: KRG, JBG
Checked By: JBG
Project Title:

HUNTSVILLE READINESS CENTER
5180 MOORE'S MILL ROAD
HUNTSVILLE AL, 35811

Sheet Title:
UNIT SUPPLY
VAULT DETAILS

Sheet Number:
GE4.10

ALABAMA REGISTERED
No. 20431
PROFESSIONAL
ENGINEER
JOHN BARRY GRAILEE
11-01-24

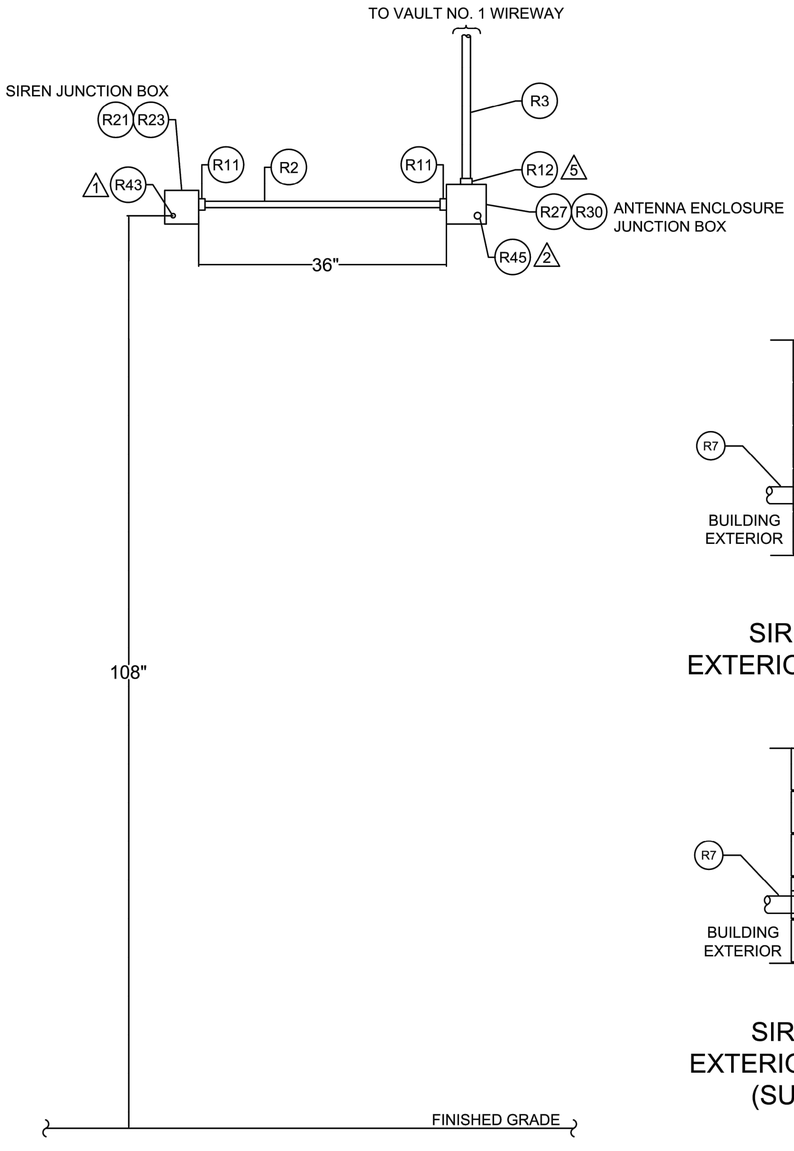

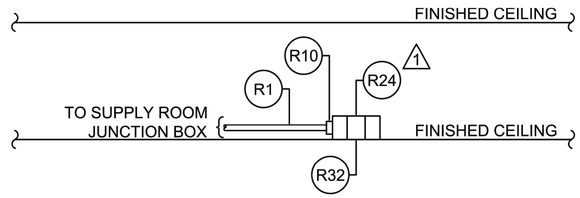

SUPPLY ROOM CEILING - TYPICAL
OCTAGON JUNCTION BOX

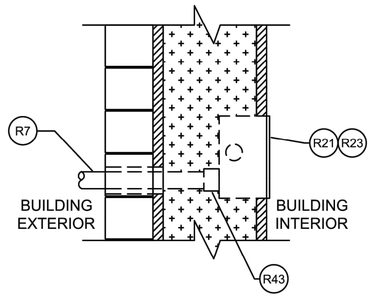

SIREN JUNCTION BOX
EXTERIOR WALL PENETRATION
(IN-WALL)

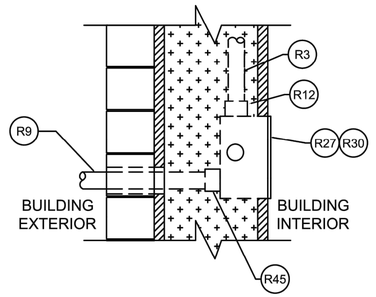

ANTENNA ENCLOSURE JUNCTION BOX
EXTERIOR WALL PENETRATION
(IN-WALL)

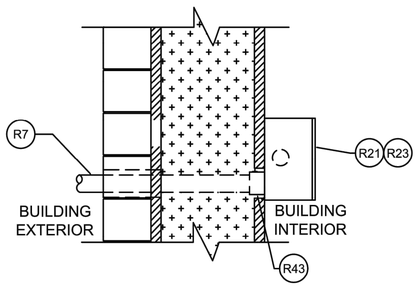

SIREN JUNCTION BOX
EXTERIOR WALL PENETRATION
(SURFACE MOUNTED)

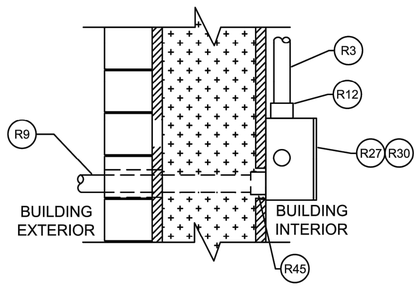

ANTENNA ENCLOSURE JUNCTION BC
EXTERIOR WALL PENETRATION
(SURFACE MOUNTED)

NOTES:

1. ALL CONDUIT EMBEDDED WITHIN WALL. BOX FACES TO BE FLUSH WITH FINISHED SURFACE.

LEGEND:

DENOTES MATERIAL - ITEM NUMBER

1 / GE4.11 TYPICAL SUPPLY ROOM 1 & 2 ANTENNA ENCLOSURE , SIREN, PIR DETECTOR DETAILS
N.T.S

S|S&L ARCHITECTS
Montgomery | Dothan | Auburn | Huntsville | Pensacola
WWW.SSLARCH.COM | 256.285.1063

Rev.	Description	Date

Job Number 21112
Date NOVEMBER 1, 2024
Drawn By KRG, JBG
Checked By JBG

Project Title
HUNTSVILLE READINESS CENTER
5180 MOORE'S MILL ROAD
HUNTSVILLE AL, 35811

Sheet Title
UNIT SUPPLY
VAULT DETAILS

Sheet Number
GE4.11

Gunn & Associates, P.C.
Consulting Engineers
3102 Highway 14
Millbrook, AL 36054
Tel: 334.285.1273
1200 Providence Park, Suite 200
Birmingham, AL 35242
GA#22-071

ALABAMA REGISTERED
NO. 20431
PROFESSIONAL
11-01-24
ENGINEER
JOHN BARRY GRAVLEE