PAUL B. KREBS WATER TREATMENT PLANT IMPROVEMENTS

Dustin T. Harris

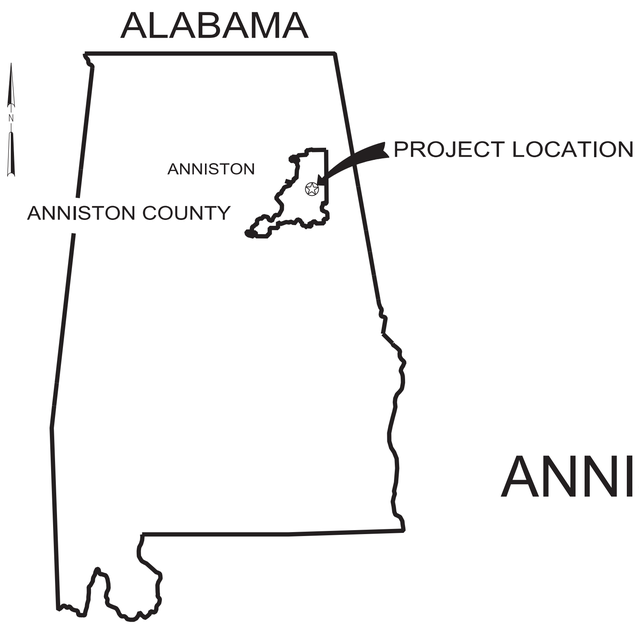

ANNISTON WATER WORKS & SEWER BOARD

PREPARED FOR THE

ANNISTON WATER WORKS & SEWER BOARD
CITY OF ANNISTON, ALABAMA

VOLUME 3 OF 3
DRAWINGS

For information regarding this project, contact:

DUSTIN HARRIS, P.E.
ONE PERIMETER PARK S, SUITE 315 N
BIRMINGHAM, ALABAMA 35243
DUSTIN.HARRIS@JACOBS.COM

Jacobs

Jacobs Project No. D3698100
SRF Project No. FS010239-02

OCTOBER 2024

BID DOCUMENTS

©JACOBS 2024. ALL RIGHTS RESERVED.

INDEX TO DRAWINGS

SHT. NO.	DWG NO.	DWG. DESCRIPTION
	GENERAL	
01	01-G-001	INDEX TO DRAWING
02	01-G-002	GENERAL SYMBOLS LEGEND AND PROJECT LOCATION MAP
03	01-G-003	CIVIL LEGEND AND NOTES
04	01-G-004	ARCHITECTURAL GENERAL NOTES, LEGEND, ABBREVIATIONS, AND APPLICABLE CODES
05	01-G-005	STRUCTURAL ABBREVIATIONS
06	01-G-006	STRUCTURAL NOTES
07	01-G-007	STRUCTURAL NOTES
08	01-G-008	PROCESS MECHANICAL LEGEND
09	01-G-009	PLUMBING LEGEND
10	01-G-010	BUILDING MECHANICAL LEGEND
11	01-G-011	INSTRUMENTATION AND CONTROL LEGEND SHEET 1
12	01-G-012	INSTRUMENTATION AND CONTROL LEGEND SHEET 2
13	01-G-013	PROCESS FLOW DIAGRAM
14	01-G-014	HYDRAULIC PROFILE
	CIVIL / YARD PIPING	
15	05-C-101	CIVIL - OVERALL EXISTING CONDITIONS SITE PLAN
16	05-C-102	CIVIL - DEMOLITION AND EROSION CONTROL SOUTH PLANT SITE
17	05-C-103	CIVIL - DEMOLITION AND EROSION CONTROL NORTH PLANT SITE
18	05-C-104	CIVIL - DEMOLITION AND EROSION CONTROL COLDWATER SPRING
19	05-C-105	CIVIL - DEMOLITION AND EROSION CONTROL AIR STRIPPING TOWERS
20	05-C-201	CIVIL - OVERALL SITE PLAN
21	05-C-202	CIVIL - SITE PLAN SOUTH PLANT SITE
22	05-C-203	CIVIL - SITE PLAN NORTH PLANT SITE
23	05-C-204	CIVIL - SITE PLAN COLDWATER SPRING
24	05-C-205	CIVIL - SITE PLAN AIR STRIPPING TOWERS
25	05-C-206	CIVIL - GRADING AND DRAINAGE PLAN SOUTH PLANT SITE
26	05-C-207	CIVIL - GRADING AND DRAINAGE PLAN NORTH PLANT SITE
27	05-C-208	CIVIL - GRADING AND DRAINAGE PLAN COLDWATER SPRING
28	05-C-209	CIVIL - ENLARGED SITE PLAN AND FLOODWAY DELINEATION
29	99-C-501	CIVIL - STANDARD DETAILS
30	99-C-502	CIVIL - STANDARD DETAILS
31	05-Y-201	YARD PIPING - PLAN
32	05-Y-202	YARD PIPING - ENLARGED PLAN
33	05-Y-203	YARD PIPING - ENLARGED PLAN
34	05-Y-301	YARD PIPING - PLAN AND PROFILE
35	05-Y-302	YARD PIPING - PLAN AND PROFILE
	ARCHITECTURAL	
36	35-A-200	FINISHED WATER PUMP STATION LIFE SAFETY PLAN
37	35-A-201	FINISHED WATER PUMP STATION FLOOR PLAN
38	35-A-202	FINISHED WATER PUMP STATION ROOF PLAN
39	35-A-301	FINISHED WATER PUMP STATION NORTH AND EAST ELEVATIONS
40	35-A-302	FINISHED WATER PUMP STATION SOUTH AND WEST ELEVATIONS
41	35-A-303	FINISHED WATER PUMP STATION BUILDING SECTIONS
42	35-A-304	FINISHED WATER PUMP STATION WALL SECTIONS
43	35-A-601	FINISHED WATER PUMP STATION SCHEDULES
44	60-A-201	ADMINISTRATION BUILDING REFLECTED CEILING PLAN
45	99-A-501	STANDARD DETAILS
46	99-A-502	STANDARD DETAILS
47	99-A-503	STANDARD DETAILS
48	99-A-504	STANDARD DETAILS
49	99-A-505	STANDARD DETAILS
	STRUCTURAL	
50	25-S-201	AIR STRIPPING TOWER - FOUNDATION PLAN
51	25-S-301	AIR STRIPPING TOWER - SECTIONS
52	30-S-101	CHLORINE CONTACT BASIN - DEMOLITION UPPER / LOWER PLAN
53	30-S-102	CHLORINE CONTACT BASIN - DEMOLITION ELEVATION AND SECTION
54	30-S-201	CHLORINE CONTACT BASIN - LOWER PLAN
55	30-S-501	CHLORINE CONTACT BASIN - SECTIONS AND DETAIL
56	35-S-201	FINISHED WATER PUMP STATION - DRILLED PIER AND FOUNDATION PLAN
57	35-S-202	FINISHED WATER PUMP STATION - FLOOR PLAN
58	35-S-203	FINISHED WATER PUMP STATION - ROOF FRAMING PLAN
59	35-S-301	FINISHED WATER PUMP STATION - SECTION
60	35-S-302	FINISHED WATER PUMP STATION - SECTION
61	35-S-303	FINISHED WATER PUMP STATION - SECTION
62	35-S-304	FINISHED WATER PUMP STATION - SECTION
63	35-S-305	FINISHED WATER PUMP STATION - SECTION
64	35-S-306	FINISHED WATER PUMP STATION - SECTION AND DETAIL
65	40-S-201	FLUORIDE AND SURGE TANK - PLAN
66	40-S-301	FLUORIDE AND SURGE TANK - SECTIONS
67	99-S-501	STANDARD DETAILS
68	99-S-502	STANDARD DETAILS
69	99-S-503	STANDARD DETAILS
70	99-S-504	STANDARD DETAILS
71	99-S-505	STANDARD DETAILS
72	99-S-506	STANDARD DETAILS
73	99-S-507	STANDARD DETAILS
74	99-S-508	STANDARD DETAILS
75	99-S-509	STANDARD DETAILS
76	99-S-510	STANDARD DETAILS
77	99-S-511	STANDARD DETAILS
78	99-S-512	STANDARD DETAILS
79	99-S-513	STANDARD DETAILS
80	99-S-514	STANDARD DETAILS
	PROCESS MECHANICAL	
81	06-D-101	DEMOLITION EXISTING PUMP ROOM PLAN
82	06-D-102	DEMOLITION STORAGE BUILDING PLAN AND DETAILS
83	06-D-103	DEMOLITION TRANSFER PUMP ROOM PHOTO DETAILS
84	06-D-201	TRANSFER PUMP ROOM - PLAN AND PHOTO DETAIL
85	25-D-201	AIR STRIPPING TOWER - PLAN
86	25-D-301	AIR STRIPPING TOWER - SECTION
87	25-D-302	AIR STRIPPING TOWER - SECTION
88	35-D-201	FINISHED WATER PUMP STATION - PLAN
89	35-D-202	FINISHED WATER PUMP STATION - SUCTION PIPING PLAN
90	35-D-301	FINISHED WATER PUMP STATION - SECTION
91	35-D-302	FINISHED WATER PUMP STATION - SECTION
92	40-D-201	FLUORIDE TANK - PLAN
93	40-D-301	FLUORIDE TANK - SECTION
94	99-D-501	STANDARD DETAILS
95	99-D-502	STANDARD DETAILS
96	99-D-503	STANDARD DETAILS

SHT. NO.	DWG NO.	DWG. DESCRIPTION
	PLUMBING / BUILDING MECHANICAL	
97	35-P-201	PLUMBING - FINISHED WATER PUMP STATION FLOOR PLAN
98	35-P-601	PLUMBING - FINISHED WATER PUMP STATION SCHEDULES
99	40-P-201	PLUMBING - FLUORIDE TANK PLAN
100	99-P-501	PLUMBING - DETAILS
101	99-P-502	PLUMBING - DETAILS
102	35-M-201	BUILDING MECHANICAL - FINISHED WATER PUMP STATION FLOOR PLAN
103	35-M-301	BUILDING MECHANICAL - FINISHED WATER PUMP STATION SECTIONS
104	35-M-601	BUILDING MECHANICAL - FINISHED WATER PUMP STATION SCHEDULES
	INSTRUMENTATION AND CONTROL	
105	08-N-001	P&ID FLUORIDE AND FINISHED WATER PUMP STATIONS
106	08-N-002	P&ID AIR STRIPPING TOWERS
107	08-N-003	P&ID SURGE TANK
108	99-N-501	STANDARD DETAILS
	ELECTRICAL	
109	01-E-001	ELECTRICAL LEGEND
110	01-E-002	ELECTRICAL NOTES AND FIXTURE SCHEDULE
111	01-E-003	SINGLE LINE DIAGRAM - PART A (SERVICE TRANSFORMERS AND GENERATORS)
112	01-E-004	SINGLE LINE DIAGRAM - PART B (FINISHED WATER PUMP STATION)
113	01-E-005	SINGLE LINE DIAGRAM - PART C (EXISTING OPERATIONS BUILDING AND AIR STRIPPING AREA)
114	01-E-006	PLANT NETWORK DIAGRAM
115	01-E-011	ELECTRICAL SCHEDULES
116	01-E-012	ELECTRICAL SCHEDULES
117	01-E-013	ELECTRICAL SCHEDULES
118	01-E-014	ELECTRICAL SCHEDULES
119	01-E-015	ELECTRICAL SCHEDULES
120	01-E-016	ELECTRICAL SCHEDULES
121	01-E-017	ELECTRICAL SCHEDULES
122	01-E-018	DUCTBANK SCHEDULE
123	01-E-021	CONTROL AND INSTRUMENTATION SCHEDULES
124	01-E-022	CONTROL AND INSTRUMENTATION SCHEDULES
125	01-E-031	ELEMENTARY DIAGRAMS
126	01-E-032	ELEMENTARY DIAGRAMS
127	05-E-101	WATER TREATMENT PLANT SITE ELECTRICAL DEMOLITION PLAN
128	05-E-201	OVERALL SITE ELECTRICAL PLAN
129	05-E-202	SOUTH SITE ELECTRICAL PLAN
130	05-E-203	SOUTH SITE LIGHTING PLAN
131	05-E-204	SOUTH SITE SUPPLEMENTAL GROUNDING PLAN
132	05-E-205	FINISHED WATER FLOW VAULT AND ENTRY GATE ELECTRICAL PLANS
133	25-E-201	AIR STRIPPING TOWERS ELECTRICAL PLAN
134	35-E-201	FINISHED WATER PUMP STATION PROCESS ELECTRICAL PLAN
135	35-E-202	FINISHED WATER PUMP STATION ELECTRICAL ROOM LARGE SCALE ELECTRICAL PLAN
136	35-E-203	FINISHED WATER PUMP STATION LIGHTING AND RECEPTACLE PLAN
137	35-E-204	FINISHED WATER PUMP STATION HVAC ELECTRICAL PLAN
138	40-E-201	FLUORIDE TANKS ELECTRICAL PLAN
139	60-E-201	TRANSFER PUMP ROOM ELECTRICAL PLAN
140	60-E-202	ADMINISTRATION BUILDING LIGHTING PLAN
141	99-E-501	ELECTRICAL DETAILS
142	99-E-502	ELECTRICAL DETAILS
143	99-E-503	ELECTRICAL DETAILS
144	99-E-504	ELECTRICAL DETAILS
145	99-E-505	ELECTRICAL DETAILS

ALABAMA LICENSED No. 30112 PROFESSIONAL ENGINEER DUSTIN T. HARRIS

Dustin T. Harris

NO.	DATE	REVISION	BY	APVD

DSGN	DR	CHK	APVD
D HARRIS	KL DIAZ	M STICKLEY	D HARRIS

PAUL B. KREBS WATER TREATMENT PLANT
IMPROVEMENTS
ANNISTON WATER WORKS & SEWER BOARD
CITY OF ANNISTON, ALABAMA

REUSE OF DOCUMENTS: THIS DOCUMENT, AND THE IDEAS AND DESIGNS INCORPORATED HEREIN, AS AN INSTRUMENT OF PROFESSIONAL SERVICE, IS THE PROPERTY OF JACOBS AND IS NOT TO BE USED, IN WHOLE OR IN PART, FOR ANY OTHER PROJECT WITHOUT THE WRITTEN AUTHORIZATION OF JACOBS.

Jacobs

GENERAL
INDEX TO DRAWINGS

NTS
VERIFY SCALE
BAR IS ONE INCH ON ORIGINAL DRAWING.
0 1"

DATE	OCTOBER 2024
PROJ	D3698100
DWG	01-G-001
SHEET	01 of 145

BID DOCUMENTS

©JACOBS 2024. ALL RIGHTS RESERVED.

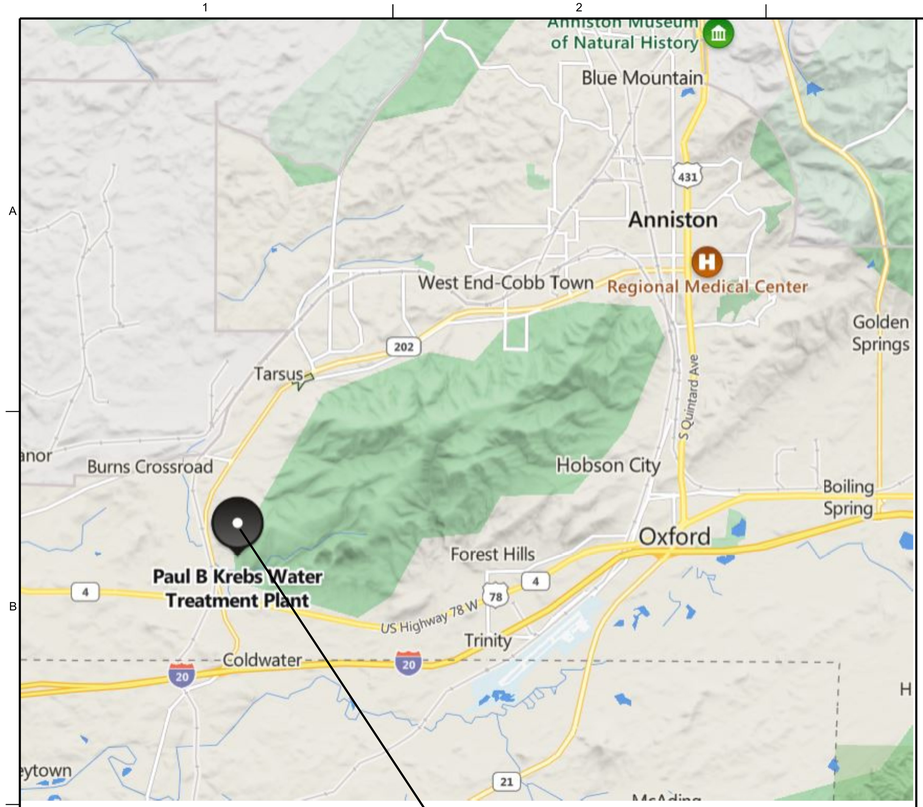

Paul B. Krebs Water Treatment Plant
245 Tom Burkhart Dr.
Anniston, AL

N

VICINITY MAP

NTS

GENERAL LEGEND AND SYMBOLS

SECTION / DETAIL DESIGNATIONS

SECTION (LETTER) OR DETAIL (NUMERAL) DESIGNATION

A

DRAWING NUMBER (REPLACED WITH A LINE IF TAKEN AND SHOWN ON SAME SHEET)

ON DRAWING WHERE SECTION OR DETAIL IS TAKEN:

1
10-D-301

DRAWING NUMBER WHERE SHOWN

B — SECTION
SCALE
10-D-201

ON DRAWING WHERE SECTION IS SHOWN:

DRAWING NUMBER(S) WHERE TAKEN

2 — DETAIL
SCALE
10-D-201

ON DRAWING WHERE DETAIL IS SHOWN:

DRAWING NUMBER(S) WHERE TAKEN

DRAWING TITLE

SCALE

ON DRAWING WHERE ONLY A TITLE IS REQUIRED WITH NO REFERENCE (eg: ELEVATIONS)

B

SECTION CALLOUT WHERE SECTION IS ON THE SAME SHEET AND CUT EXTENDS TO A FIXED LIMIT

B
10-D-301

B
10-D-301

SECTION CALLOUT WHERE SECTION IS ON ANOTHER SHEET AND CUT EXTENDS THROUGHOUT ENTIRE SHEET

1 — GRID LINE INDICATOR

1 — KEYNOTE NUMBER

1 — REVISION / ADDENDA NUMBER

N — NORTH ARROW

PHOTO DESIGNATION

P1
D-102

ARROW POINTS IN DIRECTION THE PHOTO WAS TAKEN

PHOTO NUMBER

DWG NUMBER WHERE PHOTO IS SHOWN

DRAWING NUMBERING LEGEND:

THE DRAWING NUMBERS FOR THIS PROJECT SHALL FOLLOW THE FOLLOWING GUIDELINE:

XX - X - # # #

FACILITY NUMBER

DISCIPLINE DESIGNATOR

SHEET TYPE / GROUP (1 DIGIT)

SEQUENTIAL NUMBERING (2 DIGITS)

DESIGNATOR	DISCIPLINE	SHEET TYPE / GROUP		SEQUENTIAL NUMBERS
G	GENERAL	0	GENERAL	00
C	CIVIL	1	DEMOLITION	01
Y	YARD PIPING	2	PLANS	02
S	STRUCTURAL	3	SECTIONS, ELEVATIONS	03
A	ARCHITECTURAL	5	DETAILS	
D	PROCESS MECHANICAL	6	SCHEDULES	
M	BUILDING MECHANICAL			
E	ELECTRICAL			
N	INSTRUMENTATION AND CONTROL			

GENERAL NOTE:

1. THIS IS A STANDARD LEGEND SHEET. THEREFORE, NOT ALL OF THE INFORMATION SHOWN MAY BE USED ON THIS PROJECT.

DESIGN DETAIL DESIGNATION

DESIGN DETAIL DESIGNATION (NUMERAL)

1234-567

SHOWN ON DESIGN DETAIL DRAWING(S)

NOTES:

1. ALL DESIGN DETAILS ARE TYPICAL AND MUST BE USED IF DESIGN DETAIL DESIGNATION IS NOT SHOWN
2. THE TERM STANDARD DETAIL, OR A FORM OF IT, IS SYNONYMOUS WITH DESIGN DETAIL. THE DESIGN DETAILS REPRESENT THE CHARACTER AND NATURE OF THE WORK REQUIRED THROUGHOUT THE PROJECT. ALL ASSOCIATED WORK SHALL BE IN ACCORDANCE WITH THE DESIGN DETAILS SHOWN WHETHER THE DETAILS ARE SPECIFICALLY REFERENCED OR NOT.

Dustin T. Harris

ALABAMA LICENSED No. 30112 PROFESSIONAL ENGINEER DUSTIN T. HARRIS

Digitally signed by Dustin T. Harris
DN: cn=Dustin T. Harris, o=Jacobs Engineering, ou=PPS - PPS IB Americas, email=Dustin.Harris@jacobs.com, c=US
Date: 2024.10.23 13:51:23 -05'00'

NO.	DATE	REVISION	BY	APVD

DSGN D HARRIS | DR D HARRIS | CHK KL DIAZ | APVD M STICKLEY | APVD D HARRIS

PAUL B. KREBS WATER TREATMENT PLANT
IMPROVEMENTS
ANNISTON WATER WORKS & SEWER BOARD
CITY OF ANNISTON, ALABAMA

REUSE OF DOCUMENTS: THIS DOCUMENT, AND THE IDEAS AND DESIGNS INCORPORATED HEREIN, AS AN INSTRUMENT OF PROFESSIONAL SERVICE, IS THE PROPERTY OF JACOBS AND IS NOT TO BE USED, IN WHOLE OR IN PART, FOR ANY OTHER PROJECT WITHOUT THE WRITTEN AUTHORIZATION OF JACOBS.

Jacobs

GENERAL
GENERAL SYMBOLS LEGEND AND PROJECT LOCATION MAP

NTS
VERIFY SCALE
BAR IS ONE INCH ON ORIGINAL DRAWING.
0 1"

DATE	OCTOBER 2024
PROJ	D3698100
DWG	01-G-002
SHEET	02 of 145

BID DOCUMENTS

©JACOBS 2024. ALL RIGHTS RESERVED.

GENERAL SITE NOTES:

1. SOURCE OF EXISTING FEATURES SHOWN ON THE CIVIL PLANS ARE FROM RECORD DRAWINGS AND SURVEY COMPLETED BY JACOBS IN AUGUST 2023.
2. EXISTING CONDITIONS MAY VARY FROM THOSE SHOWN ON THESE PLANS. THE CONTRACTOR SHALL VERIFY EXISTING CONDITIONS AND ADJUST WORK PLAN ACCORDINGLY PRIOR TO BEGINNING CONSTRUCTION AND ORDERING OF MATERIALS.
3. EXISTING STRUCTURES, AND SITE FEATURES ARE SHOWN SCREENED AND/OR LIGHT-LINED UNLESS OTHERWISE STATED. NEW FINISH GRADE, STRUCTURES, AND SITE FEATURES ARE SHOWN HEAVY-LINED.
4. HORIZONTAL DATUM: NAD83 LOCATIONS OF EXISTING AND PROPOSED STRUCTURES AND FEATURES WERE SET IN RELATION TO EXISTING RECORD DRAWINGS.
5. VERTICAL DATUM: ALL ELEVATIONS SHOWN IN THE PLANS ARE REFERENCED TO VERTICAL DATUM NAVD88.
6. MAINTAIN, RELOCATE, OR REPLACE EXISTING SURVEY MONUMENTS, CONTROL POINTS, AND STAKES WHICH ARE DISTURBED OR DESTROYED. PERFORM THE WORK TO PRODUCE THE SAME LEVEL OF ACCURACY AS THE ORIGINAL MONUMENT(S) IN A TIMELY MANNER, AND AT THE CONTRACTOR'S EXPENSE.
7. COORDINATE WITH OWNER FOR ALLOWED STAGING AREA. STAGING AREA SHALL BE FOR CONTRACTOR'S EMPLOYEE PARKING, CONTRACTOR'S TRAILERS AND ON-SITE STORAGE OF MATERIALS.
8. PROVIDE TEMPORARY FENCING AS NECESSARY TO MAINTAIN SECURITY AT ALL TIMES.
9. ELEVATIONS GIVEN ARE TO FINISH GRADE UNLESS OTHERWISE SHOWN.
10. SLOPE UNIFORMLY BETWEEN CONTOURS AND SPOT ELEVATIONS SHOWN.
11. UNLESS OTHERWISE SHOWN, ALL DISTURBED AREAS NOT RECEIVING A HARD SURFACE SHALL BE GRASSED.
12. CONTRACTOR SHALL TAKE ALL NECESSARY MEASURES TO POSITIVELY PRECLUDE EROSION CONTROL MATERIALS FROM LEAVING THE SITE.
13. CONTRACTOR SHALL CLEAR AREAS WITHIN LIMITS OF CONSTRUCTION, REMOVE DEAD, DYING OR LEANING TREES THAT MAY STRIKE OR DAMAGE PROJECT FACILITIES IN FALLING. CUT STUMPS FLUSH WITH GROUND AND REMOVE DEBRIS. DISPOSE OF CLEARING DEBRIS OFFSITE. BURNING OF DEBRIS ONSITE WILL NOT BE ALLOWED.

GENERAL YARD PIPING AND UTILITIES NOTES:

1. EXISTING UNDERGROUND UTILITIES SHOWN OBTAINED FROM RECORD DRAWINGS AND AERIAL IMAGES. NOT ALL UTILITIES ARE SHOWN. UNLESS OTHERWISE NOTED ALL UNDERGROUND FEATURES ARE SHOWN AT ASCE 38-02 QUALITY LEVEL D.

   ASCE 38-02 DEFINITIONS:
   - QUALITY LEVEL D: INFORMATION DERIVED FROM EXISTING RECORDS.
   - QUALITY LEVEL C: INFORMATION OBTAINED FROM SURVEYING ABOVE GROUND UTILITY FEATURES.
   - QUALITY LEVEL B: INFORMATION OBTAINED FROM SURFACE GEOPHYSICAL METHODS, MARKED, SURVEYED (WITH TOLERANCES), AND MAPPED.
   - QUALITY LEVEL A: PRECISE HORIZONTAL AND VERTICAL LOCATION KNOWN.
2. CONTRACTOR SHALL USE NON-DESTRUCTIVE METHODS (HAND-DIGGING, POTHOLING, ETC.) TO FIELD VERIFY DEPTH AND LOCATION OF EXISTING PIPING. UNLESS OTHERWISE NOTED, PROTECT ALL EXISTING UTILITIES DURING CONSTRUCTION.
3. FOR PIPING LEGEND, SEE DRAWING 01-G-008.
4. UNLESS OTHERWISE SHOWN ALL PIPING SHALL HAVE A MINIMUM OF 3 FEET COVER.
5. ALL PIPES SHALL HAVE A CONSTANT SLOPE BETWEEN INVERT ELEVATIONS UNLESS A FITTING IS SHOWN.
6. ALL NEW WATER PIPES MUST BE PROPERLY FLUSHED, PRESSURE TESTED, CHLORINATED AND BACTERIOLOGICALLY TESTED.
7. MINIMUM ALLOWABLE CLEARANCE BETWEEN PIPES AT CROSSINGS SHALL BE 6". CONTROLLED DENSITY FILL SUPPORT IS REQUIRED AT CROSSINGS LESS THAN 12".
8. FOR TRENCHING AND BACKFILL, SEE 3123-110
9. UNLESS OTHERWISE NOTED, ALL SURFACE RESTORATION OF TRENCHES SHALL BE COMPLETED PER DETAILS 3123-115 AND 3123-116

CIVIL LEGEND

EXISTING	THIS CONTRACT	
× 157.7	⊗ 158.5	SPOT ELEVATION
155	155	CONTOUR LINE
	3:1	EMBANKMENT AND SLOPE
		DRAINAGEWAY OR DITCH
		CATCH BASIN OR INLET
		TRENCH DRAIN
	OR	SIGN
	D OR S	MANHOLE
	E	ELECTRICAL MANHOLE
	E	ELECTRIC HANDHOLE
		POST OR GUARD POST
		GUY ANCHOR
		FIRE HYDRANT
		UTILITY POLE
		LIGHT POLE
	BM	BENCH MARK
		SURVEY CONTROL POINT OR POINT OF INTERSECTION
		BRUSH/TREE LINE
		TREE
		PROPERTY LINE
		CENTER LINE, BUILDING, ROAD, ETC.
		STAGING OR WORK AREA LIMITS
	N 1000.00 E 1000.00	STRUCTURE, BUILDING OR FACILITY LOCATION POINT - COORDINATES
	B-1	BORING LOCATION AND NUMBER
	TP-2	TEST PIT LOCATION AND NUMBER
	P-3	PIEZOMETER LOCATION AND NUMBER
OR OR		DEMOLITION
OR	OR	STRUCTURE, BUILDING OR FACILITY
		ASPHALT CONCRETE PAVEMENT
		MILL AND REPAVE
		GRAVEL SURFACING
CONC.		CONCRETE PAVEMENT / SIDEWALK
		CURB
		CURB AND GUTTER
		VALLEY GUTTER
		CONCRETE PAVEMENT / SIDEWALK
		SINGLE SWING GATE
		DOUBLE SWING GATE
		SLIDING GATE
		CHAIN LINK FENCE
		SILT FENCE
		CULVERT
EX		EXISTING BURIED ELECTRIC
	CE	ELECTRICAL CONDUIT

DEMOLITION NOTES

1. DEMOLITION WORK SHALL BE PERFORMED IN ACCORDANCE WITH SPECIFICATION SECTION 02 41 00, DEMOLITION AND PER DEMOLITION PLANS.
2. DEMOLITION OF EXISTING FEATURES OR STRUCTURES SHALL INCLUDE COMPLETE REMOVAL AND DISPOSAL OF ANY MATERIALS ENCOUNTERED.

EROSION CONTROL NOTES:

1. THE CONTRACTOR SHALL BE RESPONSIBLE FOR ALL EROSION AND SEDIMENT CONTROL REQUIREMENTS FOR THIS PROJECT AND COMPLY WITH THE FOLLOWING:
   A) CURRENT VERSION OF ALABAMA HANDBOOK FOR EROSION CONTROL AND STORM WATER MANAGEMENT ON CONSTRUCTION SITES AND URBAN AREAS.
   B) ADEM AND EPA NPDES STORM WATER PROGRAM.
   C) CURRENT ALDOT STANDARD AND SPECIFICATION OF HIGHWAY CONSTRUCTION.
   D) CITY OF ANNISTON'S STORM WATER MANAGEMENT PROGRAM.
2. ALL PERIMETER EROSION AND SEDIMENT CONTROL DEVICES SHALL BE INSTALLED PRIOR TO COMMENCEMENT OF SITE WORK AND REMAIN UNTIL PERMANENT GROUND COVER IS ESTABLISHED. CONTRACTOR IS RESPONSIBLE TO REPAIR OR REPLACE DAMAGED ITEMS.
3. SOIL DISTURBING ACTIVITIES WILL INCLUDE: CLEARING AND GRUBBING, ALL EARTHWORK OPERATIONS, PLACEMENT OF EROSION CONTROL MEASURES, GRADING OPERATIONS, CONSTRUCTION OF FACILITIES, CONSTRUCTION OF CONCRETE, CONCRETE PAVEMENT, TRENCHING AND UTILITY INSTALLATION.
4. CONTRACTOR IS RESPONSIBLE FOR MAINTAINING ALL EROSION CONTROL MEASURES INSTALLED IN GOOD WORKING ORDER FOR THE FULL DURATION OF THIS CONTRACT.
5. EROSION, SEDIMENT AND POLLUTION CONTROL MEASURES SHALL BE PROVIDED AS SHOWN AND ARE THE MINIMUM REQUIRED. ADDITIONAL DEVICES MAY BE REQUIRED AS NECESSARY DURING CONSTRUCTION AT NO ADDITIONAL COST TO THE OWNER.
6. CONTRACTOR SHALL INSTALL AND ADD TO EROSION CONTROL MEASURES AS DIRECTED BY THE ENGINEER.
7. PROVISIONS TO PREVENT EROSION OF SOIL FROM THE SITE SHALL BE, AT A MINIMUM, IN CONFORMANCE WITH THE REQUIREMENTS OF THE ALABAMA HANDBOOK FOR EROSION CONTROL, SEDIMENT CONTROL, AND STORMWATER MANAGEMENT ON CONSTRUCTION SITES AND URBAN AREAS, CURRENT EDITION. THIS DESIGN SHALL CONFORM TO AND ALL WORK WILL BE PERFORMED IN ACCORDANCE WITH THE STANDARDS AND SPECIFICATIONS OF THIS PUBLICATION.
8. NO BURN OR BURY PITS SHALL BE PERMITTED ON THE SITE WITHOUT THE EXPRESS WRITTEN AUTHORIZATION OF THE SITE OWNER.
9. A TEMPORARY COVER OF HEAVY MULCH OR MULCH WITH TEMPORARY SEEDING SHALL BE PLACED ON ALL AREAS WHERE PERMANENT COVER CAN NOT BE ESTABLISHED IMMEDIATELY DUE TO SEASONAL LIMITATIONS.
10. IT IS THE RESPONSIBILITY OF THE CONTRACTOR TO ENSURE THAT UNDER NO CIRCUMSTANCES ANY SEDIMENT, TRASH, OR DEBRIS BE ALLOWED ONTO ADJACENT PROPERTIES, PUBLIC LANDS, OR OUTSIDE OF THE CONSTRUCTION LIMITS.
11. TEMPORARY SILT CONTROL FENCE SHALL BE INSTALLED AND MAINTAINED BY THE CONTRACTOR THROUGHOUT THE LIFE OF THE PROJECT. THE CONTRACTOR SHALL INSPECT FENCE DAILY AND AFTER EVERY RAIN EVENT. ACCUMULATED SILT SHALL BE REMOVED AS SOON AS PRACTICAL, BUT NO LATER THAN WHEN FENCE IS HALF FULL. CONTRACTOR SHALL REMOVE THE SILT FENCE WHEN PERMANENT GRASSING HAS BEEN ESTABLISHED.
12. ALL EROSION AND SEDIMENT CONTROL DEVICES SHALL MEET THE MINIMUM REQUIREMENTS OF THE SPECIFICATIONS AND ALL LOCAL, STATE, AND FEDERAL LAWS AS APPLICABLE TO THIS PROJECT. ALL DEVICES SHALL BE PROPERLY INSTALLED AND BE OF SUITABLE MATERIALS. ANY DEVICES JUDGED TO BE INADEQUATE IN MATERIAL AND/OR CONSTRUCTION WILL IMMEDIATELY BE REPLACED WITH NEW OR ADDITIONAL DEVICES TO ENSURE PROPER CONTROL.
13. WASTE MATERIAL SHALL NOT BE DISCHARGED TO WATERS OF THE STATE.
14. PREVENT SURFACE AND STORM WATER RUNOFF FROM ENTERING EXCAVATIONS.
15. ALL EXCESS SPOIL MATERIAL SHALL BE HAULED OFF SITE AND DISPOSED OF IN THE PROPER MANNER.
16. FILL MATERIALS SHALL BE STORED IN DESIGNATED STORAGE AREAS COORDINATED AND APPROVED BY OWNER. STORAGE OF FILL SHALL NOT OCCUR ON PAVED AREAS OR ROADWAYS AND SHALL BE COVERED WITH PLASTIC.
17. ALL CONSTRUCTION SITE ENTRANCES SHALL BE PROTECTED BY A TEMPORARY CONSTRUCTION SITE ENTRANCE THAT INCLUDES WASH AREA TO PREVENT TRACKING OF MUD AND DEBRIS ONTO PUBLIC RIGHT-OF-WAYS.
18. PROTECTION OF COLDWATER SPRING FROM SEDIMENT AND STORMWATER DEBRIS IS CRITICAL. MAINTENANCE OF SEDIMENT AND CONTROL MEASURES ADJACENT TO THE SPRING IS A PRIORITY. CONTRACTOR SHALL MONITOR ALL EROSION CONTROL DEVICES ADJACENT TO THE SPRING WEEKLY AND AFTER ALL MAJOR RAINFALL EVENTS AND MODIFY ACCORDINGLY TO PREVENT ANY SEDIMENTS FROM ENTERING THE SPRING FROM SURFACE WATER RUNOFF.

ALABAMA LICENSED PROFESSIONAL ENGINEER No. PE51002 LAUREN ELIZABETH MAYES

NO.	DATE	REVISION	BY	APVD

DSGN L MAYES | DR KL DIAZ | CHK J RAMOS | APVD L MAYES

REUSE OF DOCUMENTS: THIS DOCUMENT, AND THE IDEAS AND DESIGNS INCORPORATED HEREIN, AS AN INSTRUMENT OF PROFESSIONAL SERVICE, IS THE PROPERTY OF JACOBS AND IS NOT TO BE USED, IN WHOLE OR IN PART, FOR ANY OTHER PROJECT WITHOUT THE WRITTEN AUTHORIZATION OF JACOBS.

PAUL B. KREBS WATER TREATMENT PLANT IMPROVEMENTS
ANNISTON WATER WORKS & SEWER BOARD
CITY OF ANNISTON, ALABAMA

Jacobs

GENERAL
CIVIL LEGEND AND NOTES

NTS
VERIFY SCALE
BAR IS ONE INCH ON ORIGINAL DRAWING. 0 1"

DATE	OCTOBER 2024
PROJ	D3698100
DWG	01-G-003
SHEET	03 of 145

BID DOCUMENTS

©JACOBS 2024. ALL RIGHTS RESERVED.

ARCHITECTURAL ABBREVIATIONS

ABBREVIATION	DEFINITION
A	AWNING
AC	ACOUSTICAL CEILING
ACFL	ACCESS FLOORING
ACMU	ACOUSTICAL CMU
ACT	ACOUSTICAL TILE
AJ	ADJUSTABLE
AL	ALUMINUM
AR	ANCHOR ROD
AS	AS SELECTED
BRK	BRICK
BNZ	BRONZE
BV	BLOCK VENT
C	CASEMENT
CLR	CLEAR
CLSR	CLOSER
CMU	CONCRETE MASONRY UNITS
CNTR	COUNTER
COL	COLOR
CONC	CONCRETE
CONSTR	CONSTRUCTION
CPT	CARPET
CRC	CHEMICAL-RESISTANT COATINGS
CT	CERAMIC TILE
DA	DUAL ACTION
DB	DRAINABLE
DH	DOUBLE HUNG
EIFS	EXTERIOR INSULATION AND FINISH SYSTEM
EXP	EXPOSED STRUCTURE
FCTY	FACTORY
FNSH	FINISH
FRCF	FIBER REINFORCED CONCRETE FILL
FRP	FIBERGLASS REINFORCED PLASTIC
FWC	FABRIC WALL COVERING
FX	FIXED
GALV	GALVANIZED STEEL
GCMU	GLAZED CONCRETE MASONRY
GH	GREENHOUSE
GLZ	GLAZING
GMU	GLASS MASONRY UNIT GRAY
GSB	GYPSUM SOFFIT BOARD
GWB	GYPSUM BOARD
HC	HOLLOW CORE
HDNR	HARDENER
HGT	HEIGHT
HM	HOLLOW METAL
HS	HORIZONTAL SLIDING
J	JALOUSIE
JA	JAL-AWNING
KEY	KEY GROUP
KPL	KICK PLATE
LD	COMBINATION LOUVER/DAMPER
MATL	MATERIAL
MDO	MEDIUM DENSITY OVERLAY
MET	METAL
MO	MANUALLY OPERABLE
MFR	MANUFACTURER
MS	MANUFACTURER'S STANDARD
P	PROJECTED
PAVT	PAVER TILE
PEMB	PRE-ENGINEERED METAL BUILDING
PLAM	PLASTIC LAMINATE
PLAS	PLASTER
PLWD	PLYWOOD
PNL	PANELING
PP	PUSH-PULL
PTN	PARTITION
QT	QUARRY TILE
RESIL	RESILIENT
RFS	ROLL-UP FIRE SHUTTER
RRUB	RADIAL RUBBER FLOORING
RUB	RUBBER SHEET FLOORING
SC	SOLID CORE WOOD
SIM	SIMILAR
SMLS	SEAMLESS EPOXY
SOI	SPRAY-ON INSULATION
SP	STORMPROOF
SST	STAINLESS STEEL
STL	STEEL
SVIN	SHEET VINYL
TCTG	TRAFFIC COATING
TH	TOP HINGED
TR	TRANSOM
TSHD	THRESHOLD
TWP	TRANSLUCENT PANEL SYSTEM
VCT	VINYL COMPOSITION TILE
VINT	VINYL TILE
VNL	VINYL
VP	VERTICAL PIVOTED
VS	VERTICAL SLIDE
VWC	VINYL WALL COVERING
WD	WOOD
WHT	WHITE
WRB	WATER RESISTANT GWB
WS	WEATHERSTRIPPING
WW	WINDOW WALL
X	OPEN

ARCH/STRUCT MATERIAL SYMBOLS

SYMBOL	LEGEND
	GRATING, SPAN DIRECTION INDICATED
	CHECKERED PLATE
	GROUT
	GRANULAR FILL
	EARTH OR FINISH GRADE
	CONCRETE
	CMU WALL (PLAN)
	CMU WALL (SECTION)
	MASONRY WALL
	METAL STUD WALL (PLAN)

SYMBOL	LEGEND
	WOOD STUD WALL (PLAN)
	RIGID INSULATION
	BATT INSULATION
	STEEL
	ALUMINUM
	PLYWOOD
	GYPSUM WALLBOARD
	ACOUSTICAL TILE
	WOOD, ROUGH CONTINUOUS
	WOOD, ROUGH NON-CONTINUOUS
	WOOD, FINISHED

GENERAL ARCHITECTURAL NOTES

1. UNLESS OTHERWISE INDICATED, PLAN DIMENSIONS ARE TO COLUMN GRID ON CENTERLINES, NOMINAL SURFACE OF MASONRY, FACE OF STUDS AND FACE OF CONCRETE WALLS.
2. "FLOOR LINE" REFERS TO TOP OF CONCRETE SLABS. FINISH FLOORING IS INSTALLED ABOVE THE FLOOR LINE. FOR DEPRESSED FLOORS AND CURBS, SEE STRUCTURAL DRAWINGS.
3. REPETITIVE FEATURES ARE NOT DRAWN IN THEIR ENTIRETY AND SHALL BE COMPLETELY PROVIDED AS IF DRAWN IN FULL.
4. LINE OF EXISTING GRADES, AS SHOWN ON THE BUILDING ELEVATIONS AND SECTIONS ARE APPROXIMATE. THEY ARE AT THE BUILDING FACE, OR ON THE SECTION END EXCEPT AS NOTED. SEE CIVIL DRAWINGS FOR ACTUAL GRADE ELEVATIONS.
5. VERIFY ALL ROUGH-IN DIMENSIONS FOR EQUIPMENT PROVIDED IN THIS CONTRACT, OR BY OTHERS.
6. REFER TO ARCHITECTURAL, STRUCTURAL, MECHANICAL, ELECTRICAL AND OTHER CATEGORIES OR DRAWINGS FOR ADDITIONAL NOTES.
7. VERIFY SIZE AND LOCATION OF, AND PROVIDE: REQUIRED OPENINGS THROUGH FLOORS AND WALLS, ACCESS DOORS, FURRING, CURBS, ANCHORS AND INSERTS. PROVIDE ALL BASES AND BLOCKING REQUIRED FOR ACCESSORIES, MECHANICAL, ELECTRICAL AND OTHER EQUIPMENT.

APPLICABLE CODES

INTERNATIONAL BUILDING CODE (IBC), 2021 EDITION WITH ALABAMA AMENDMENTS

INTERNATIONAL EXISTING BUILDING CODE (IEBC), 2021 EDITION WITH ALABAMA AMENDMENTS

INTERNATIONAL FUEL GAS CODE (IFGC), 2021 EDITION WITH ALABAMA AMENDMENTS

INTERNATIONAL FIRE CODE (IFC), 2021 EDITION WITH ALABAMA AMENDMENTS

INTERNATIONAL MECHANICAL CODE (IMC), 2021 EDITION WITH ALABAMA AMENDMENTS

INTERNATIONAL PLUMBING CODE (IPC), 2021 EDITION WITH ALABAMA AMENDMENTS

INTERNATIONAL ENERGY CONSERVATION CODE (IECC), 2021 EDITION WITH ALABAMA AMENDMENTS

NATIONAL ELECTRICAL CODE (NEC), NFPA 70, 2020 EDITION

ARCHITECTURAL/STRUCTURAL LEGEND

SYMBOL	LEGEND
A	GRID / COLUMN INDICATOR
ROOM NAME XX101 OR ROOM NAME 101	ROOM IDENTIFIER
"XX" = FACILITY INDICATOR (IF SHOWN); XX101A: DOOR LETTER, ROOM NUMBER	DOOR IDENTIFIER
XXW-1 OR W-1	WINDOW IDENTIFIER
XXR-1 OR R-1	RELIGHT IDENTIFIER
XXLV-1 OR L-1	LOUVER IDENTIFIER
A	WALL TYPE INDICATOR
S-1	SIGNAGE IDENTIFIER
QUANTITY AND DIRECTION OF POINTERS AS REQUIRED; A B C D E; 1 XX-A-301	INTERIOR ELEVATION INDICATOR
⊗ 110.50	SPOT ELEVATION INDICATOR (IN FEET)
XXXX EL XX.XX	ELEVATION DATUM (IN FEET)
	DIRECTION OF SLOPE DOWN
HINGE SIDE	HATCH SWING INDICATOR
ACTIVE, INACTIVE; XX101A	INDICATES PAIR OF DOORS (DOOR # ON ACTIVE)
F.EXT-X (IN CABINET); F.EXT-X (ON BRACKET)	FIRE EXTINGUISHER "X" = NUMBER IN SPECIFICATIONS
CJ	CONTROL JOINT
X" EJ	EXPANSION JOINT X" = DIMENSION
	RAILINGS
P-1	PRECAST PANEL IDENTIFIER
S-X	SLAB INDICATOR
X	COLUMN INDICATOR
W-X	WALL INDICATOR
B-X	BEAM INDICATOR

STATE OF ALABAMA
ADAM N. DOLSAK
6305
REGISTERED ARCHITECT
Adam N. Dolsak
REVIEW COPY
Digitally signed by Adam N. Dolsak
DN: c=US, st=Alabama, o=Jacobs, ou=Jacobs Engineering Group, cn=Adam N. Dolsak, email=adam.dolsak@jacobs.com, l=Dallas, st=Texas, o=Jacobs
OID.2.5.4.97=ITRUS+DE-6655558
Date: 2024.10.28 13:32:50-04'00'

NO.	DATE	REVISION	BY	APVD

DSGN W HOLLINGSWORTH | DR P DENNING | CHK A DOLSAK | APVD A DOLSAK

PAUL B. KREBS WATER TREATMENT PLANT IMPROVEMENTS
ANNISTON WATER WORKS & SEWER BOARD
CITY OF ANNISTON, ALABAMA

REUSE OF DOCUMENTS: THIS DOCUMENT, AND THE IDEAS AND DESIGNS INCORPORATED HEREIN, AS AN INSTRUMENT OF PROFESSIONAL SERVICE, IS THE PROPERTY OF JACOBS AND IS NOT TO BE USED, IN WHOLE OR IN PART, FOR ANY OTHER PROJECT WITHOUT THE WRITTEN AUTHORIZATION OF JACOBS.

Jacobs

GENERAL
ARCHITECTURAL GENERAL NOTES, LEGEND, ABBREVIATIONS AND APPLICABLE CODES

NTS
VERIFY SCALE
BAR IS ONE INCH ON ORIGINAL DRAWING. 0 1"

DATE	OCTOBER 2024
PROJ	D3698100
DWG	01-G-004
SHEET	04 of 145

BID DOCUMENTS

©JACOBS 2024. ALL RIGHTS RESERVED.

STRUCTURAL ABBREVIATIONS

@	AT
AB	ANCHOR BOLT
ACI	AMERICAN CONCRETE INSTITUTION
ADDL	ADDITIONAL
ADJ	ADJACENT
AFF	ABOVE FINISH FLOOR
AHR	ANCHOR
AISC	AMERICAN INSTITUTE OF STEEL CONSTRUCTION
AL	ALUMINUM
ALLOW	ALLOWABLE
ALTN	ALTERNATE
ANSI	AMERICAN NATIONAL STANDARDS INSTITUTE
APPROX	APPROXIMATE
APVD	APPROVED
ARCH	ARCHITECTURAL
ASTM	AMERICAN SOCIETY FOR TESTING AND MATERIALS
AWS	AMERICAN WELDING SOCIETY
BETW	BETWEEN
BF	BOTTOM FACE
BLDG	BUILDING
BM	BEAM
BO	BOTTOM OF
BOT	BOTTOM
BRG	BEARING
C	CHANNEL OR C-SHAPE
C TO C	CENTER TO CENTER
CHKD PL	CHECKERED PLATE
CIPC	CAST-IN-PLACE CONCRETE
CJ	CONSTRUCTION JOINT
CJP	COMPLETE JOINT PENETRATION (WELD)
CL	CENTERLINE
CLR	CLEARANCE, CLEAR
CMU	CONCRETE MASONRY UNIT
COL	COLUMN
CONC	CONCRETE
CONN	CONNECTION
CONSTR	CONSTRUCTION
CONT	CONTINUOUS
COORD	COORDINATE
CRSI	CONCERTE REINFORCING STEEL INSTITUTE
CTLJ	CONTROL JOINT
CTR	CENTER
CTRD	CENTERED
CU	CUBIC
d	PENNY (NAIL SIZE)
DBA	DEFORMED BAR ANCHOR
DBL	DOUBLE
DEG	DEGREE
DET	DETAIL
DF	DOUGLAS FIR
DIA	DIAMETER
DIAG	DIAGONAL
DIM.	DIMENSION
DIR	DIRECTION
DL	DEAD LOAD
DO	DITTO
DTI	DIRECT TENSION INDICATOR
DWG	DRAWING
DWL	DOWEL
EA	EACH
EF	EACH FACE
EJ	EXPANSION JOINT
EL	ELEVATION
ELEC	ELECTRICAL
ELEV	ELEVATOR
EMBED	EMBEDMENT, EMBED
ENGR	ENGINEER
EQL	EQUAL
EQL SP	EQUALLY SPACED
EQPT	EQUIPMENT
EQUIV	EQUIVALENT
EW	EACH WAY
EXP JT	EXPANSION JOINT
EXST	EXISTING
EXT	EXTERIOR
FAB	FABRICATE, FABRICATION
FB	FLAT BAR
FD	FLOOR DRAIN
FDN	FOUNDATION
FF	FINISH FLOOR
FG	FINISH GRADE
FL	FLOOR
FRCF	FIBER-REINFORCED CONCRETE FILL
FRP	FIBERGLASS REINFORCED PLASTIC
FT	FEET, FOOT
FTG	FOOTING
FV	FIELD VERIFY
GA	GAUGE, GAGE
GALV	GALVANIZED (HOT DIP)
GLB	GLUE LAMINATED BEAM
GRTG	GRATING
GVL	GRAVEL
H.A.S.	HEADED ANCHOR STUD
HDR	HEADER
HORIZ	HORIZONTAL
HPT	HIGH POINT
HSS	HOLLOW STRUCTURAL SECTION
HVAC	HEATING , VENTILATION, AND AIR CONDITIONING
IBC	INTERNATIONAL BUILDING CODE
ID	INSIDE DIAMETER
I.F.	INSIDE FACE
IN.	INCH(ES)
INSUL	INSULATION
INTMD	INTERMEDIATE
INTR	INTERIOR
J	JOIST
JB	JOIST BEARING
JT	JOINT
KIP(S)	THOUSAND POUNDS
KSF	KIPS PER SQUARE FOOT
KSI	KIPS PER SQUARE INCH
L	ANGLE OR L-SHAPE
LB(S)	POUND(S) FORCE
LF	LINEAR FEET
LIW	LOAD INDICATING WASHER
LL	LIVE LOAD
LLH	LONG LEG HORIZONTAL
LLV	LONG LEG VERTICAL
LNTL	LINTEL
LONG.	LONGITUDINAL
LPT	LOW POINT
LSL	LONG SLOTTED HOLE
MATL	MATERIAL
MAX	MAXIMUM
MB	MACHINE BOLT
MECH	MECHANICAL
MET.	METAL
MFD	MANUFACTURED
MFR(S)	MANUFACTURER (MANUFACTURER'S)
MIN	MINIMUM
MISC	MISCELLANEOUS
MO	MASONRY OPENING
NA	NOT APPLICABLE
NIC	NOT IN CONTRACT
NO.	NUMBER
NTS	NOT TO SCALE
O TO O	OUT TO OUT
OC	ON CENTER
OD	OUTSIDE DIAMETER
O.F.	OUTSIDE FACE
OPNG(S)	OPENING(S)
OPP	OPPOSITE
OWSJ	OPEN WEB STEEL JOIST
P	PILASTER
PERIM	PERIMETER
PJF	PREMOLDED JOINT FILLER
PJP	PARTIAL JOINT PENETRATION (WELD)
PKG	PACKAGE
PL	PLATE
PLCS	PLACES
PLF	POUNDS FORCE PER LINEAR FOOT
PLYWD	PLYWOOD
PNL	PANEL
PRCST	PRECAST
PREFAB	PREFABRICATE(D)
PRELIM	PRELIMINARY
PRI	PRIMARY
PSF	POUNDS FORCE PER SQUARE FOOT
PSI	POUNDS FORCE PER SQUARE INCH
PT	PRESSURE TREATED
PVC	POLYVINYL CHLORIDE
R	RADIUS, RISER
RAD	RADIUS
RC	REINFORCED CONCRETE
RDAA	REBAR DOWEL ADHESIVE ANCHOR
RDW	REDWOOD
RECT	RECTANGULAR, RECTANGLE
REF	REFERENCE
REINF	REINFORCE, REINFORCEMENT
REQD	REQUIRED
RST	REINFORCING STEEL
S	I-BEAM
SC	SLIP CRITICAL (BOLTS)
SCHED	SCHEDULE
SECT.	SECTION
SH	SHEET
SIM	SIMILAR
SOG	SLAB ON GRADE
SP	SPACE
SPEC(S)	SPECIFICATION(S)
SPECD	SPECIFIED
SPG	SPACING
SQ	SQUARE
SSL	SHORT SLOTTED HOLE
SST	STAINLESS STEEL
STD	STANDARD
STIF	STIFFENER
STIR.	STIRRUP
STL	STEEL
STR	STRAIGHT
STRL	STRUCTURAL
STRUCT	STRUCTURE
SYMM	SYMMETRICAL
T	TREAD
T&B	TOP AND BOTTOM
TAS	THREADED ANCHOR STUD
TC	TOP OF CONCRETE, TOP OF CURB
TEMP	TEMPERATURE
TF	TOP OF FOOTING, TOP FACE
THK	THICK
THKNS	THICKNESS
THRU	THROUGH
TM	TOP OF MASONRY
T.O.	TOP OF
TOC	TOP OF CONCRETE
TOS	TOP OF STEEL
TOW	TOP OF WALL
TPER	THERMOPLASTIC ELASTOMERIC RUBBER
TPV	THERMOPLASTIC VULCANIZATE
TRANSV	TRANSVERSE
TST	TOP OF STEEL
TW	TOP OF WALL
TYP	TYPICAL
UBC	UNIFORM BUILDING CODE
UNIF	UNIFORM, UNIFORMLY
UON	UNLESS OTHERWISE NOTED
VERT	VERTICAL
W	WIDE FLANGE BEAM
W/	WITH
W/O	WITHOUT
WD	WOOD
WP	WORKING POINT
WS	WATERSTOP, WATER SURFACE
WT	WEIGHT
WWF	WELDED WIRE FABRIC

NOTES:
FOR ABBREVIATIONS NOT LISTED, SEE GENERAL ABBREVIATIONS AND ASME Y14.38 - "ABBREVIATIONS AND ACRONYMS FOR USE ON DRAWINGS AND RELATED DOCUMENTS" AS DISTRIBUTED BY THE AMERICAN SOCIETY OF MECHANICAL ENGINEERS (ASME).

ALABAMA LICENSED No. 29827 PROFESSIONAL ENGINEER GARRICK DONNELL PETTY

Digitally signed by Garrick D Petty
Garrick D Petty
Date: 2024.10.29 14:07:04 -04'00'

NO.	DATE	REVISION	BY	APVD

DSGN	DR	CHK	APVD
G PETTY	KL DIAZ	D EVERSON	G PETTY

PAUL B. KREBS WATER TREATMENT PLANT
IMPROVEMENTS
ANNISTON WATER WORKS & SEWER BOARD
CITY OF ANNISTON, ALABAMA

Jacobs

GENERAL
STRUCTURAL ABBREVIATIONS

REUSE OF DOCUMENTS: THIS DOCUMENT, AND THE IDEAS AND DESIGNS INCORPORATED HEREIN, AS AN INSTRUMENT OF PROFESSIONAL SERVICE, IS THE PROPERTY OF JACOBS AND IS NOT TO BE USED, IN WHOLE OR IN PART, FOR ANY OTHER PROJECT WITHOUT THE WRITTEN AUTHORIZATION OF JACOBS.

BID DOCUMENTS

VERIFY SCALE
BAR IS ONE INCH ON ORIGINAL DRAWING.
0 1"

DATE	OCTOBER 2024
PROJ	D3698100
DWG	01-G-005
SHEET	05 of 145

©JACOBS 2024. ALL RIGHTS RESERVED.

DESIGN CRITERIA

1. APPLICABLE CODE: 2021 INTERNATIONAL BUILDING CODE (IBC), AS AMENDED BY THE CITY OF ANNISTON AND ALL OTHER APPLICABLE LOCAL AGENCIES.

2. REFER TO THE DRAWINGS FOR ADDITIONAL AND SPECIFIC STRUCTURE LOADINGS AND REQUIREMENTS.

3. ALL LOADS SHOWN ARE SERVICE LEVEL (UNFACTORED) UNLESS SPECIFICALLY NOTED OTHERWISE.

4. DEAD LOADS:
   A. SELF WEIGHT = MATERIAL / EQPT ACTUAL WEIGHT
   B. COLLATERAL:
      MECH, ELEC, & PIPING UTILITIES = 25 PSF (FACILITY 35)

5. ROOF LIVE LOADS:
   TYPICAL = 20 PSF (FACILITY 35)

   LIVE LOAD REDUCTION NOT ALLOWED

6. FLOOR LIVE LOADS:
   PROCESS AND ELECTRICAL ROOM = 300 PSF
   ELEVATED PLATFORMS = 100 PSF

   LIVE LOAD REDUCTION NOT ALLOWED.

   DEFLECTION CRITERIA FOR CONTRACTOR DESIGNED ROOF AND FLOOR FRAMING MEMBERS:
   TOTAL LOAD = L/240
   LIVE LOAD = L/360
   WHERE L IS THE MEMBER SPAN LENGTH

7. SNOW LOADS:
   GROUND SNOW LOAD, Pg = 5.0 PSF
   SNOW EXPOSURE FACTOR, Ce = 1.0
   THERMAL FACTOR, Ct = 1.0
   SLOPE FACTOR, Cs = 1.0
   IMPORTANCE FACTOR, Is = 1.2
   FLAT ROOF SNOW LOAD, Pf = 4.2 PSF
   MINIMUM LOW-SLOPE ROOF SNOW LOAD, Pm = 6.0 PSF
   RAIN-ON-SNOW SURCHARGE = 5.0 PSF
   UNIFORM ROOF DESIGN SNOW LOAD = 9.2 PSF

   SEE SNOW DRIFT DIAGRAMS ON FACILITY DRAWING(S) FOR AREAS WITH INCREASED DRIFT LOADS.

8. WIND LOADS:
   RISK CATEGORY FOR ALL STRUCTURES = IV
   ASCE 7 METHOD = MWFRS ALL HEIGHTS
   BASIC WIND SPEED (3-SECOND GUST) = 119 MPH
   EXPOSURE CATEGORY = C
   INTERNAL PRESSURE COEFFICIENT, GCpi = +/- 0.55 UON
   (PARTIALLY ENCLOSED ASSUMED FOR FACILITY 35)
   WIND IMPORTANCE FACTOR, Iw = 1.0

   SEE FACILITY DRAWING(S) FOR COMPONENT AND CLADDING DESIGN WIND PRESSURES

9. SEISMIC LOADS:
   RISK CATEGORY FOR ALL STRUCTURES = IV
   SEISMIC IMPORTANCE FACTOR, Ie = 1.50
   MAPPED SPECTRAL RESPONSE ACCELERATIONS
      Ss = 0.240g
      S1 = 0.092g
   DESIGN SPECTRAL RESPONSE ACCELERATIONS
      SDS = 0.256g
      SD1 = 0.147g
   SITE CLASS = D
   SEISMIC DESIGN CATEGORY = D
   FOR FACILITY 35:
   SEISMIC FORCE RESISTING SYSTEM(S) = SPECIAL REINFORCED MASONRY SHEAR WALL
   SEISMIC RESPONSE COEFFICIENT(S), Cs = 0.077
   RESPONSE MODIFICATION COEFFICIENT(S), R = 5
   DESIGN BASE SHEAR(S), V = 65 kips

   SEE FACILITY DRAWINGS FOR ADDITIONAL SEISMIC PARAMETERS SPECIFIC TO EACH FACILITY

   STRUCTURES HAVE BEEN ANALYZED USING THE EQUIVALENT LATERAL FORCE PROCEDURES OF ASCE 7, UON.

10. SPECIAL LOADS:
    SEE FACILITY DRAWINGS FOR ADDITIONAL LOADS SPECIFIC TO EACH FACILITY

11. RAIN LOADS:
    100-YEAR RAIN INTENSITY, I = 4.65 IN/HR

12. SOIL DESIGN PARAMETERS:
    A. NET ALLOWABLE SOIL BEARING PRESSURES:
       EQUIPMENT PADS = 2000 PSF
       FACILITY 35 SHALLOW FOUNDATIONS = 1500 PSF
       NOTE: ALLOWABLE BEARING PRESSURE ASSUMES SUBGRADE PREPARATION IN ACCORDANCE WITH PROJECT GEOTECHNICAL REPORT
    B. GROUND WATER (GW) ELEVATION:
       NORMAL HIGH GW = EL 582.50 (FACILITY 35 - BLDG)
       = EL 584.00 (FACILITY 35 - GENERATOR YARD)
       = EL 581.00 (FACILITY 40)
       100 YEAR FLOOD = 592.00
    C. EQUIVALENT DRAINED FLUID PRESSURES (ABOVE GW):
       ACTIVE: = 33 PCF
       AT REST: = 55 PCF
       PASSIVE: = 330 PCF
    D. EQUIVALENT UNDRAINED FLUID PRESSURES (BELOW GW):
       AT REST: = 86.4 PCF
    E. VERTICAL SURCHARGE: = 2 FT OF SOIL WEIGHT
    F. COEFFICIENT OF FRICTION: = 0.38
    G. MODULUS OF SUBGRADE REACTION = 150 PCI
       (ASSUMES 6" MINIMUM CRUSHED STONE SUBGRADE)
    H. NATIVE SOIL UNIT WEIGHT = 110 PCF
    I. FACTOR OF SAFETY FOR UPLIFT RESISTANCE (SOIL FRICTION AND WEDGE FAILURE NOT CONSIDERED):
       NORMAL HIGH GW ELEVATION FOS = 1.25
       100 YEAR FLOOD ELEVATION FOS = 1.10

13. FROST DEPTH: =18 IN
    (ASSUMED PER GEOTECHNICAL REPORT MINIMUM EXTERIOR FOUNDATION DEPTH FOR SHEAR FAILURE)

14. ICE LOADS:
    A. NOMINAL ICE THICKNESS: = 1.00 IN
    B. CONCURRENT WIND SPEED (3-SECOND GUST): = 30 MPH
    C. ICE IMPORTANCE FACTOR FOR ICE THICKNESS, Ii: = 1.25
    D. ICE IMPORTANCE FACTOR FOR CONCURRENT WIND: = 1.00

GENERAL INFORMATION

1. FOR ABBREVIATIONS NOT LISTED, SEE ASME Y14.38 "ABBREVIATIONS AND ACRONYMS: PUBLICATION AS DISTRIBUTED BY THE AMERICAN SOCIETY OF MECHANICAL ENGINEERS (ASME).

2. DESIGN DETAILS ARE INTENDED TO BE TYPICAL AND SHALL APPLY TO SIMILAR SITUATIONS OCCURRING THROUGHOUT THE PROJECT, WHETHER OR NOT THEY ARE INDIVIDUALLY CALLED OUT.

3. VERIFY FINAL OPENING DIMENSIONS IN WALLS, SLABS, AND DECKS WITH OTHER DISCIPLINE DRAWINGS PRIOR TO CONSTRUCTION OF THESE ELEMENTS.

4. FOR NUMBER, TYPE, SIZE, ARRANGEMENT, AND/OR LOCATION OF EQUIPMENT PADS, SEE OTHER DISCIPLINE DRAWINGS. COORDINATE WITH EQUIPMENT SUPPLIER PRIOR TO PLACING SLABS, WALLS AND FOUNDATIONS. COORDINATE PIPING OPENINGS WITH OTHER DISCIPLINE DRAWINGS.

5. DO NOT CUT OR MODIFY STRUCTURAL MEMBERS FOR PIPES, DUCTS, ETC, UNLESS SPECIFICALLY DETAILED OR APPROVED IN WRITING BY THE ENGINEER.

6. VISITS TO THE JOB SITE BY THE ENGINEER TO OBSERVE THE CONSTRUCTION DO NOT IN ANY WAY MEAN THAT ENGINEER IS GUARANTOR OF CONSTRUCTOR'S WORK, NOR RESPONSIBLE FOR THE COMPREHENSIVE OR SPECIAL INSPECTIONS, COORDINATION, SUPERVISION, OR SAFETY AT THE JOB SITE.

7. INFORMATION (DETAILING, DIMENSIONS, CONFIGURATIONS, AND ELEVATIONS, ETC.) OF EXISTING CONSTRUCTION SHOWN REFLECTS AVAILABLE EXISTING DESIGN DOCUMENTS, AND DOES NOT NECESSARILY REPRESENT THE AS-CONSTRUCTED CONDITIONS. THE CONTRACTOR SHALL FIELD VERIFY DIMENSIONS, ELEVATIONS AND DETAILING OF THE EXISTING STRUCTURES PRIOR TO UNDERTAKING ANY WORK THAT IS AFFECTED BY THE EXISTING STRUCTURE. NOTIFY ENGINEER IF CONDITIONS VARY FROM THAT SHOWN PRIOR TO STARTING WORK.

INSPECTION AND TESTING

1. SPECIAL INSPECTION DOES NOT INCLUDE OR WAIVE THE RESPONSIBILITY FOR INSPECTIONS REQUIRED BY THE BUILDING OFFICIAL. THE CONTRACTOR SHALL SCHEDULE BOTH INSPECTIONS.

2. SPECIFIED CONCRETE AND MASONRY AND OTHER MATERIAL TESTING RELATED TO SPECIAL INSPECTION DURING CONSTRUCTION WILL BE OWNER FURNISHED.

3. SPECIFIED LABORATORY TEST MIXES AND SIMILAR TEST RESULTS TO VERIFY MATERIAL QUALITY AND CONFORMANCE TO SPECIFICATIONS, AND SUBMITTED FOR REVIEW PRIOR TO ACCEPTANCE FOR USE ON THE PROJECT, SHALL BE THE RESPONSIBILITY OF THE CONTRACTOR.

4. SPECIAL INSPECTION, TESTING AND OBSERVATION (OWNER FURNISHED) IS REQUIRED IN ACCORDANCE WITH IBC SECTIONS 110 AND 1704 AS INDICATED IN THE STATEMENT OF SPECIAL INSPECTIONS IN SPECIFICATION 01 45 33 SPECIAL INSPECTION, OBSERVATION AND TESTING.

FOUNDATIONS

1. REFER TO 'REPORT OF GEOTECHNICAL EXPLORATION - REV 2 - PAUL B KREBS WATER TREATMENT PLANT IMPROVEMENTS - ANNISTON, CALHOUN COUNTY, ALABAMA' BY CONTOUR ENGINEERING, DATED AUGUST 01, 2024 (CONTOUR PROJECT NO: AG23JAC01).

2. EXCAVATIONS SHALL BE SHORED TO PREVENT SUBSIDENCE AND DAMAGE TO ADJACENT EXISTING STRUCTURES, ROADS, UTILITIES, ETC.

3. SEE FACILITY DRAWINGS AND GEOTECHNCIAL REPORT FOR FOUNDATION SUBGRADE INFORMATION.

4. FOUNDATION BEARING SURFACES SHALL BE OBSERVED BY THE GEOTECHNICAL ENGINEER OR QUALIFIED DESIGNEE PRIOR TO PLACEMENT OF FORMWORK OR REINFORCING STEEL. THE OBSERVATION SHALL VERIFY IF THE ACTUAL EXPOSED SUBGRADE IS AS ANTICIPATED BY THE SITE SPECIFIC BORINGS, TESTING AND DATA REPORTS.

5. NO BACKFILL SHALL BE PLACED BEHIND WALLS UNTIL THE WALL'S CONCRETE HAS ATTAINED 100 PERCENT AND TOP SUPPORTING SLAB'S CONCRETE HAS ATTAINED 80 PERCENT OF THEIR SPECIFIED 28 DAY COMPRESSIVE STRENGTH, OR UNTIL TOP-OF-WALL FRAMING SYSTEMS, INCLUDING STEEL OR WOOD DIAPHRAGMS, HAVE BEEN COMPLETED.

6. NO BACKFILL SHALL BE PLACED BEHIND CANTILEVERED, FREE TOP WALLS UNTIL THE CONCRETE HAS ATTAINED 100 PERCENT OF ITS SPECIFIED 28 DAY COMPRESSIVE STRENGTH.

7. USE OF EXPLOSIVES IS NOT ALLOWED.

FORMWORK, SHORING, AND BRACING

1. STRUCTURES SHOWN ON THE DRAWINGS HAVE BEEN DESIGNED FOR STABILITY UNDER FINAL CONDITIONS ONLY. DESIGN SHOWN DOES NOT INCLUDE NECESSARY COMPONENTS OR EQUIPMENT FOR STABILITY OF THE STRUCTURES DURING CONSTRUCTION. CONTRACTOR IS RESPONSIBLE FOR WORK RELATING TO CONSTRUCTION ERECTION METHODS, BRACING, SHORING, RIGGING, GUYS, SCAFFOLDING, FORMWORK, AND OTHER WORK AIDS REQUIRED TO SAFELY PERFORM THE WORK SHOWN.

2. TEMPORARY SHORING SHALL REMAIN IN PLACE UNTIL ELEVATED CONCRETE FLOOR OR SLABS HAVE REACHED 80 PERCENT OF THE 28 DAY COMPRESSIVE STRENGTH AS DETERMINED BY FIELD CYLINDER BREAKS.

CONCRETE REINFORCING

1. REINFORCING STEEL:
   TYPICAL: ASTM A615, GRADE 60

2. FABRICATION AND PLACEMENT OF REINFORCING STEEL SHALL BE IN ACCORDANCE WITH CRSI MSP-1 "MANUAL OF STANDARD PRACTICE" AND ACI 301 "SPECIFICATIONS FOR STRUCTURAL CONCRETE".

3. MINIMUM REINFORCING FOR CONCRETE WALLS AND SLABS SHALL BE AS FOLLOWS:

THICKNESS	REINF EACH WAY	LOCATION
6"	#4@12"	CENTERED
8"	#5@12"	CENTERED
10"	#4@12"	EACH FACE
12"	#5@12"	EACH FACE

   PROVIDE LARGER SIZES AND MORE REINFORCING IN SECTIONS OF CONCRETE WHERE REQUIRED BY THE DETAILS ON THE DRAWINGS OR BY THE SPECIFICATIONS.

4. CONCRETE COVER FOR REINFORCING, UNLESS SHOWN OTHERWISE, SHALL BE:
   TYPICAL, UON: 2"
   WHEN CAST AGAINST EARTH: 3"

5. REFER TO WALL CORNER AND WALL INTERSECTION REINFORCING DETAIL 0330-003. WALL CORNER REINFORCING SIZES AND SPACINGS SHALL BE AS SHOWN ON THE DRAWINGS AND REFERENCED TO THIS DETAIL. TYPICAL HORIZONTAL WALL REINFORCING SHALL LAP WITH THE CORNER HORIZONTAL REINFORCING.

6. 90 DEGREE BENDS, UNLESS OTHERWISE SHOWN, SHALL BE ACI 318 STANDARD HOOKS IN ACCORDANCE WITH TABLE 25.3.1 OR SECTION 25.3.4 OF ACI 318-19.

7. WALL CORNER AND WALL INTERSECTION REINFORCEMENT BARS SHALL BE CONTINUOUS AROUND CORNERS AND THROUGH COLUMNS OR PILASTERS. REINFORCEMENT SHALL BE EXTENDED INTO CONNECTING WALLS AND LAPPED ON THE OPPOSITE FACE OF THE CONNECTING WALLS, AS INDICATED IN DETAIL 0330-003.

8. WALL FOOTING CORNER AND INTERSECTION REINFORCEMENT BARS SHALL BE EXTENDED INTO CONNECTING FOOTINGS AND LAPPED ON THE OPPOSITE FACE OF THE CONNECTING FOOTING. OUTSIDE FACE WALL FOOTING REINFORCEMENT SHALL BE LAPPED WITH CORNER BARS. ALL WALL FOOTING REINFORCEMENT SHALL BE CONTINUOUS THROUGH COLUMNS OR PILASTERS FOOTINGS.

9. LAP VERTICAL WALL BARS WITH DOWELS FROM BASE SLABS AND EXTEND INTO TOP FACE OF ROOF SLABS AND LAP WITH TOP SLAB REINFORCEMENT. PROVIDE A MINIMUM OF FOUR FULL HEIGHT VERTICAL BARS WITH MATCHING DOWELS AT WALL ENDS, CORNERS AND INTERSECTIONS WITH SIZE TO MATCH TYPICAL VERTICAL REINFORCING STEEL SHOWN OR REQUIRED BY NOTES ABOVE.

10. REINFORCING STEEL FOR FOOTINGS AND SLABS ON GRADE SHALL BE ADEQUATELY SUPPORTED ON BAR SUPPORTS WITH SPACERS TO KEEP REINFORCING ABOVE THE PREPARED GRADE. LIFTING REINFORCING OFF GRADE DURING CONCRETE PLACEMENT IS NOT PERMITTED.

11. REFER TO OPENING REINFORCING DETAILS 0330-001 AND 0330-002.

12. PROVIDE #4x4'-0" LG BARS AT ALL RE-ENTRANT CORNERS. PLACE 2" (+1/2") CLR FROM TOP OF CONCRETE.

13. REINFORCEMENT BENDS AND LAPS, UNLESS OTHERWISE NOTED, SHALL SATISFY THE FOLLOWING MINIMUM REQUIREMENTS:

CONCRETE DESIGN STRENGTH = 4,000 PSI MIN AT 28 DAYS[3] GRADE 60 REINFORCING STEEL										
BAR SIZE		#3	#4	#5	#6	#7	#8	#9	#10	#11
LAP SPLICE LENGTH										
SPACING = 3"	TOP BAR [2]	1'-4"	1'-8"	2'-1"	3'-0"	5'-2"	6'-8"	8'-6"	10'-10"	13'-4"
	OTHER BAR	1'-4"	1'-4"	1'-8"	2'-4"	4'-0"	5'-2"	6'-7"	8'-4"	10'-3"
SPACING = 4"	TOP BAR [2]	1'-4"	1'-8"	2'-0"	2'-5"	3'-10"	5'-0"	6'-5"	8'-1"	10'-0"
	OTHER BAR	1'-4"	1'-4"	1'-7"	1'-10"	3'-0"	3'-11"	4'-11"	6'-3"	7'-8"
SPACING ≥ 6"	TOP BAR [2]	1'-4"	1'-8"	2'-0"	2'-5"	3'-6"	4'-0"	5'-0"	6'-2"	7'-5"
	OTHER BAR	1'-4"	1'-4"	1'-7"	1'-10"	2'-9"	3'-1"	3'-10"	4'-9"	5'-8"
EMBEDMENT LENGTH										
SPACING = 3"	TOP BAR [2]	1'-0"	1'-3"	1'-8"	2'-4"	4'-0"	5'-2"	6'-7"	8'-4"	10'-3"
	OTHER BAR	1'-0"	1'-0"	1'-3"	1'-10"	3'-1"	4'-0"	5'-1"	6'-5"	7'-11"
SPACING = 4"	TOP BAR [2]	1'-0"	1'-3"	1'-7"	1'-10"	3'-0"	3'-11"	4'-11"	6'-3"	7'-8"
	OTHER BAR	1'-0"	1'-0"	1'-3"	1'-5"	2'-4"	3'-0"	3'-10"	4'-10"	5'-11"
SPACING ≥ 6"	TOP BAR [2]	1'-0"	1'-3"	1'-7"	1'-10"	2'-9"	3'-1"	3'-10"	4'-9"	5'-8"
	OTHER BAR	1'-0"	1'-0"	1'-3"	1'-5"	2'-1"	2'-5"	3'-0"	3'-8"	4'-5"

1. LAP LENGTHS ARE BASED ON MINIMUM CONCRETE COVER OF 2". LONGER LENGTHS ARE REQUIRED FOR CONCRETE COVER LESS THAN 2".
2. TOP BARS SHALL BE DEFINED AS ANY HORIZONTAL BARS PLACED SUCH THAT MORE THAN 12 INCHES OF CONCRETE IS CAST IN THE MEMBER BELOW THE BAR IN ANY SINGLE POUR. HORIZONTAL WALL BARS ARE CONSIDERED TOP BARS.
3. WHERE 3000 PSI CONCRETE IS USED, INCREASE ABOVE LENGTHS BY 16 PERCENT. WHERE 3500 PSI CONCRETE IS USED, INCREASE ABOVE LENGTHS BY 7 PERCENT.

ALABAMA LICENSED No. 29827 PROFESSIONAL ENGINEER GARRICK DONNELL PETTY

Digitally signed by Garrick D Petty Petty
Date: 2024.10.29 14:07:08-04'00'

NO.	DATE	REVISION	BY	APVD

DSGN	DR	CHK	APVD
G PETTY	KL DIAZ	D EVERSON	G PETTY

PAUL B. KREBS WATER TREATMENT PLANT
IMPROVEMENTS
ANNISTON WATER WORKS & SEWER BOARD
CITY OF ANNISTON, ALABAMA

REUSE OF DOCUMENTS: THIS DOCUMENT, AND THE IDEAS AND DESIGNS INCORPORATED HEREIN, AS AN INSTRUMENT OF PROFESSIONAL SERVICE, IS THE PROPERTY OF JACOBS AND IS NOT TO BE USED, IN WHOLE OR IN PART, FOR ANY OTHER PROJECT WITHOUT THE WRITTEN AUTHORIZATION OF JACOBS.

Jacobs

GENERAL
STRUCTURAL NOTES

VERIFY SCALE
BAR IS ONE INCH ON ORIGINAL DRAWING.
0 1"

DATE	OCTOBER 2024
PROJ	D3698100
DWG	01-G-006
SHEET	06 of 145

BID DOCUMENTS

©JACOBS 2024. ALL RIGHTS RESERVED.

CAST IN PLACE CONCRETE

1. 28-DAY COMPRESSIVE STRENGTHS (TO MEET STRUCTURAL STRENGTH REQUIREMENTS):

TYPICAL UNLESS OTHERWISE NOTED:	= 5000 PSI (CMD-1)
CURBS AND SIDEWALKS:	= 4500 PSI (CMD-5)
ELECTRICAL DUCT BANK AND PIPE ENCASEMENT:	= 3500 PSI (CMD-3)
FIBER-REINFORCED CONCRETE FILL:	= 4000 PSI (CMD-4)
TREMIE CONCRETE	= 4500 PSI (CMD-7)

SEE SPECIFICATION FOR CONCRETE MIX DESIGN (CMD) INFORMATION.

2. DESIGN STRENGTHS ARE SAME AS 28-DAY COMPRESSIVE STRENGTHS.
3. CONTINUOUS WATERSTOP AS SPECIFIED SHALL BE INSTALLED IN CONSTRUCTION JOINTS OF HYDRAULIC STRUCTURES, CHANNELS, AND BELOW GRADE STRUCTURES, EXCEPT WHERE SPECIFICALLY NOTED OTHERWISE.
4. ROUGHEN AND CLEAN CONSTRUCTION JOINTS IN WALLS AND SLABS AS SPECIFIED PRIOR TO PLACING ADJASENT CONCRETE.
5. COORDINATE PLACEMENT OF OPENINGS, PIPE PENETRATIONS, CURBS, DOWELS, SLEEVES, CONDUITS, BOLTS AND INSERTS PRIOR TO PLACEMENT OF CONCRETE.
6. NO ALUMINUM CONDUIT OR PRODUCTS CONTAINING ALUMINUM OR ANY OTHER MATERIAL INJURIOUS TO THE CONCRETE SHALL BE EMBEDDED IN THE CONCRETE.
7. DO NOT PLACE CONDUIT PARALLEL TO BEAM OR COLUMN REINFORCEMENT UNLESS SPECIFICALLY INDICATED IN DRAWINGS.
8. PATCH FORM TIE HOLES IN ACCORDANCE WITH DETAILS 0310-051 AND/OR 0310-052.

CONCRETE UNIT MASONRY

1. MASONRY WALL TYPE: SPECIAL REINFORCED MASONRY SHEAR WALLS.
2. DESIGN COMPRESSIVE STRENGTH, f'm, OF THE FINISHED ASSEMBLY AND MATERIAL PROPERTIES SHALL BE PER THE TABLE BELOW.
3. MORTAR: ASTM C270, TYPE S, HYDRATED.
4. GROUT: ASTM C476 COARSE GROUT. USE OF WATER REDUCERS OR SUPERPLASTICIZERS IS NOT PERMITTED.
5. CONCRETE MASONRY UNITS: ASTM C90, NORMAL WEIGHT, LINEAR SHRINKAGE SHALL NOT EXCEED 0.065 PERCENT.
6.

DESIGN COMPRESSIVE STRENGTH f 'm (PSI)	UNIT STRENGTH (PSI)	GROUT STRENGTH (PSI) MIN / MAX	MORTAR PROPERTIES
2,000	2,000	2,000 / 3500	Type S

7. PLACE COURSES IN WALLS, COLUMNS, AND PILASTERS IN RUNNING BOND PATTERN
8. PROVIDE MATCHING FOUNDATION DOWELS FOR ALL TYPICAL AND ADDITIONAL VERTICAL BARS.
9. PROVIDE VERTICAL BARS AND DOWELS WITH LAP LENGTHS AS SHOWN IN DETAIL 0422-004.
10. STAGGER ADJACENT LAP SPLICES BY 24 INCHES WHEN SEPARATED BY 3 INCHES OR LESS.
11. PROVIDE NUMBER OF FULL HEIGHT VERTICAL BARS AT EDGES OF OPENINGS AS SHOWN IN DETAIL 0422-004.
12. PROVIDE FULL HEIGHT VERTICAL BARS IN 3 CELLS AT WALL CORNERS AND INTERSECTIONS AS SHOWN IN DETAIL 0422-001.
13. PROVIDE HORIZONTAL CORNER AND INTERSECTION BARS WITH LAP LENGTHS AS SHOWN IN DETAIL 0422-001.
14. PROVIDE REINFORCED LINTELS ABOVE AND REINFORCED BOND BEAMS BELOW OPENINGS AS SHOWN IN DETAIL 0422-003.
15. PROVIDE FULL HEIGHT VERTICAL BARS WITH MATCHING DOWELS IN CELLS ADJACENT TO OPENINGS AS SHOWN IN DETAIL 0422-003.
16. GROUTING: PARTIALLY GROUT WALLS;
    A. SOLID GROUT ALL CELLS IN CMU WALLS WHERE REBAR IS SPACED AT 24 INCHES ON CENTER OR LESS, EITHER WAY.
    B. SOLID GROUT ALL PIERS, COLUMNS, HEADERS, AND BOND BEAMS.
    C. SOLID GROUT ADDITIONAL MASONRY AREAS SPECIFICALLY INDICATED ON THE DRAWINGS.
17. UNLESS OTHERWISE INDICATED, MASONRY UNIT AND GROUT TESTING SHALL BE IN CONFORMANCE WITH IBC "UNIT STRENGTH METHOD". TESTING WILL BE OWNER FURNISHED AS INDICATED ON THE STATEMENT OF SPECIAL INSPECTIONS PLAN PROVIDED ON THE DRAWINGS. PRISM TEST METHOD MAY BE SUBMITTED AS AN ALTERNATIVE OR MAY BE REQUIRED BY OWNER'S REPRESENTATIVE TO VERIFY WORK.
18. THE MINIMUM REINFORCING FOR SPECIAL REINFORCED CONCRETE BLOCK WALLS SHALL BE AS FOLLOWS. PROVIDE LARGER SIZES AND MORE REINFORCING IN SECTIONS OF WALLS WHERE REQUIRED BY THE DETAILS ON THE DRAWINGS OR BY THE SPECIFICATIONS.

WALL THICKNESS	VERTICAL REINFORCING	HORIZONTAL REINFORCING	LOCATION
8"	#6@16"	#5@16" MAX	CENTERED
12"	#6@16"	#5@16" MAX	EACH FACE

* EXCEPT WITH BOND BEAMS AT TOP OF WALL AND BOTTOM OF WALL

19. DO NOT PLACE CONDUIT IN CELLS CONTAINING PARALLEL REINFORCEMENT.

WELDING

1. WELDS SHALL CONFORM TO AMERICAN WELDING SOCIETY (AWS):
    D1.1, STRUCTURAL WELDING CODE STEEL
    D1.2, STRUCTURAL WELDING CODE ALUMINUM
    D1.3, STRUCTURAL WELDING CODE SHEET STEEL
    D1.4, STRUCTURAL WELDING CODE REINFORCING STEEL
    D1.6, STRUCTURAL WELDING CODE STAINLESS STEEL
2. REPAIR WELDS FOUND DEFECTIVE IN ACCORDANCE WITH AWS D1.1 SECTION 5.26.
3. USE INTERMITTENT WELDS AT FIELD WELDS OF EMBED PLATES AND ANGLES TO AVOID SPALLING OR CRACKING OF THE EXISTING CONCRETE.
4. BUTT JOINT WELDS SHALL BE COMPLETE JOINT PENETRATION (CJP) UNLESS INDICATED OTHERWISE.

STRUCTURAL STEEL AND METAL FABRICATIONS

1. STRUCTURAL STEEL SHALL CONFORM TO THE FOLLOWING ASTM STANDARDS:

W, C, AND MC-SHAPES	A992
M, S, AND HP-SHAPES	A572, GRADE 50
ANGLES	A572, GRADE 50
PLATES AND BARS	A36
HOLLOW STRUCTURAL SECTIONS (HSS)	A500, GRADE C (50 KSI)
STAINLESS STEEL SHAPES	A276

2. ALUMINUM SHALL CONFORM TO THE FOLLOWING ASTM STANDARDS:

STRUCTURAL SHAPES	B308
PLATES	B209

3. STRUCTURAL STEEL SHALL BE FABRICATED AND ERECTED IN CONFORMANCE WITH THE AISC MANUAL OF STEEL CONSTRUCTION, CURRENT EDITION, AND CURRENT OSHA STANDARDS.
4. FASTENERS SHALL BE HIGH STRENGTH BOLTS CONFORMING TO THE FOLLOWING ASTM STANDARDS EXCEPT WHERE SPECIFICALLY INDICATED OTHERWISE:

UNLESS SHOWN OTHERWISE	F3125 GR A325-N TYPE 1 OR GR F1852. ALL ASSEMBLIES GALVANIZED, UON.
ANCHOR BOLTS (AB)	
STAINLESS STEEL	F593, AISI TYPE 316, CONDITION CW
STEEL OR GALVANIZED STEEL	F1554, GR 36 OR GR 55 SUPPLEMENT S1, UON
MACHINE BOLTS (MB)	
STEEL	A307, GRADE A, UON
STAINLESS STEEL	F593, AISI TYPE 316, CONDITION CW
GALVANIZED STEEL	A307 / A153
ALUMINUM	F468, ALLOY 2024-T4

5. ITEMS TO BE EMBEDDED IN CONCRETE SHALL BE CLEAN AND FREE OF OIL, DIRT AND PAINT.
6. NO HOLES OTHER THAN THOSE SPECIFICALLY DETAILED SHALL BE ALLOWED THROUGH STRUCTURAL STEEL MEMBERS. NO CUTTING OR BURNING OF STRUCTURAL STEEL IS PERMITTED WITHOUT THE APPROVAL OF THE ENGINEER.

OPEN WEB METAL JOIST FRAMING

1. JOISTS SHALL BE DESIGNED, FABRICATED AND ERECTED IN ACCORDANCE WITH THE STANDARD SPECIFICATIONS OF THE AISC AND THE STEEL JOIST INSTITUTE (SJI).
2. DESIGN JOISTS FOR THE FOLLOWING LOADS:
    ROOF LIVE LOAD — SEE DESIGN CRITERIA ON DWG 1-G-005 (TOP CHORD)

    SUPERIMPOSED ROOF DEAD LOAD:
    A. ROOFING AND INSULATION — 10 PSF (TOP CHORD)
    B. CONCRETE SLAB ON METAL DECK — 51 PSF (TOP CHORD)
    C. ROOF-TOP STRUCTURES — 10 PSF (TOP CHORD)
    D. MECH/ELEC/PIPING — 25 PSF AND 100 POUND POINT LOAD AT ANY PANEL POINT (BOTTOM CHORD)
3. ROOF SNOW LOAD FOR THE DESIGN OF THE JOISTS SHALL BE:
    A. UNIFORM ROOF DESIGN SNOW LOAD: SEE DESIGN CRITERIA ON DWG 01-G-005 (TOP CHORD)
    B. DRIFTS: SEE FACILITY 35 DWG 35-S-203
4. SNOW LOADS SHALL BE APPLIED TO THE JOISTS PER THE REQUIREMENTS OF THE IBC APPLICABLE TO THIS PROJECT AND CHAPTER 7 OF ASCE 7 REFERENCED BY IBC.
5. FOR WIND LOADS ON JOIST SEE FACILITY 35 DWG 35-S-203.
6. LOADS INDICATED ABOVE ARE MINIMUM DESIGN LOADS AND SHALL NOT BE CONSTRUED TO BE ALL LOADS APPLICABLE TO THE DESIGN OF THE JOISTS. DEAD LOADS INFERRED BY THE DRAWINGS WHICH WOULD BE INCLUDED IN COMMON PRACTICE, INCLUDING EQUIPMENT LOADS AND CONSTRUCTION LOADS, SHALL BE INCLUDED IN THE DESIGN.
7. VERIFY AND COORDINATE EQUIPMENT WEIGHTS, LOCATIONS, AND ATTACHMENT REQUIREMENTS PRIOR TO JOIST FABRICATION. CONTRACTOR SHALL BE RESPONSIBLE FOR THE DESIGN OF THE VERTICAL AND LATERAL SUPPORT OF EQUIPMENT AS SPECIFIED IN SECTION 01 88 15, ANCHORAGE AND BRACING. JOIST MANUFACTURER SHALL COORDINATE AND SUPPLY ADDITIONAL DIAGONAL WEB MEMBERS AT CONCENTRATED LOAD LOCATIONS.
8. JOIST SIZES AND CHORD SIZES INDICATED ON THE PLANS ARE MINIMUM ONLY. DESIGN BY THE JOIST MANUFACTURER MAY RESULT IN A LARGER SIZE. JOISTS SHALL HAVE DOUBLE ANGLE CHORDS.
9. DESIGN JOIST TOP CHORD AT END OF ROOF SUB-DIAPHRAGMS AND JOISTS DESIGNATED AS DRAG STRUTS FOR ADDITIONAL AXIAL LOAD (BOTH TENSION AND COMPRESSION) AS INDICATED ON THE ROOF FRAMING PLANS.
10. PROVIDE CALCULATIONS, PRODUCT DATA, MATERIAL PROPERTIES, CONNECTION DETAILS, ETC FOR ALL TYPES OF JOISTS. CALCULATIONS SHALL BE STAMPED AND SIGNED BY AN ENGINEER REGISTERED IN THE STATE OF ALABAMA.
11. JOIST BRIDGING, BOTTOM CHORD BRACING, AND OTHER ACCESSORIES SHALL BE PER THE MANUFACTURER'S STANDARDS AND AS INDICATED ON THE DRAWINGS. BRACING SHALL EXTEND TO WALLS, SEE DETAIL 0521-021.
13. JOISTS SHALL BE CAMBERED FOR DEAD LOAD AS REQUIRED BY SJI. PROVIDE STANDARD SJI CAMBER UNLESS NOTED OTHERWISE. JOIST CAMBER AND DEAD LOAD DEFLECTION SHALL BE SHOWN ON SHOP DRAWINGS.

STEEL DECKING

1. FOR DECK SIZE, GAGE, AND FASTENING CONFIGURATIONS, SEE FRAMING PLANS. FASTENING CONFIGURATIONS SHOWN ARE SPECIFIC TO THE DECK PRODUCT USED AS BASIS OF DESIGN. CONTRACTOR SHALL FASTEN THE DECKING IN ACCORDANCE WITH INSTALLED DECK MANUFACTURER'S RECOMMENDATIONS TO MEET SPECIFIED CAPACITY REQUIREMENTS.
2. WELDING SHALL BE IN ACCORDANCE WITH AWS D1.3 "STRUCTURAL WELDING CODE SHEET STEEL".
3. DECKING SHALL HAVE A MINIMUM 1 1/2 INCHES BEARING ON SUPPORTS.
4. DECKING SHALL BE CONTINUOUS OVER THREE SPANS MINIMUM, EXCEPT WHERE SHOWN OTHERWISE.
5. DECK RECEIVING CONCRETE FILL SHALL BE COMPOSITE TYPE, UON.
6. WELD DECK TO DRAG STRUTS AND TOP OF WALL ANGLE TIES WITH 5/8 INCH PUDDLE WELDS AT 0'-6" ON CENTER, UNLESS NOTED OTHERWISE. LOCATE ANGLE IN DECK VALLEY. SEE STANDARD DETAILS FOR ADDITIONAL INFORMATION.
7. LOCATE OPENINGS FOR EQUIPMENT PER OTHER DISCIPLINE DRAWINGS.
8. REINFORCE DECK FOR LARGER OPENINGS PER DETAIL 0531-021. REINFORCE SMALL OPENINGS AS SPECIFIED.
9. STRUCTURAL STEEL FRAMING HAS BEEN DESIGNED FOR "UNSHORED CONDITION" DURING CONSTRUCTION, AND WILL DEFLECT UNDER WET CONCRETE LOADS. TO ACHIEVE THE FINISHED TOP OF CONCRETE INDICATED ON THE DRAWINGS, THE CONTRACTOR SHALL, AT NO ADDITIONAL COST TO THE OWNER, PROVIDE THE ADDITIONAL CONCRETE.

DEFERRED SUBMITTALS

1. DEFERRED SUBMITTALS ARE THOSE PORTIONS OF THE DESIGN WHICH ARE NOT SUBMITTED AT THE TIME OF PERMIT APPLICATION AND WHICH ARE TO BE SUBMITTED TO THE PERMITTING AGENCY FOR ACCEPTANCE PRIOR TO INSTALLATION OF THAT PORTION OF THE WORK OR ARE REQUIRED TO BE SUBMITTED FOR REVIEW ONLY BY THE ENGINEER.
2. WHERE DEFERRED SUBMITTALS INCLUDE ADDITIONAL MATERIALS, INSTALLATION, ANCHORAGE, OR CERTIFICATION OF COMPONENTS THAT REQUIRE SPECIAL INSPECTION AND/OR STRUCTURAL OBSERVATION TO MEET CODE REQUIREMENTS, THE DEFERRED SUBMITTAL SHALL INCLUDE SPECIFIC LINE ITEMS TO BE ADDED TO THE APPROPRIATE TABLES IN THE PROJECT'S STATEMENT OF SPECIAL INSPECTIONS PLAN IF THEY ARE NOT ALREADY IDENTIFIED.
3. THE FOLLOWING IS A LIST OF DEFERRED SUBMITTALS PER IBC SECTION 107.3.4.1 OF IBC 2021 THAT ARE EXPECTED TO CONTAIN STRUCTURAL CALCULATIONS OR SAFETY RELATED SYSTEM INFORMATION FOR REVIEW TO MEET BUILDING PERMITTING REQUIREMENTS FOR DESIGNED SYSTEMS. PRIOR TO INSTALLATION OF THE INDICATED STRUCTURAL ELEMENT, EQUIPMENT, DISTRIBUTION SYSTEM, OR COMPONENT OR ITS ANCHORAGE, THE CONTRACTOR SHALL SUBMIT THE REQUIRED CALCULATIONS AND SUPPORTING DATA AND DRAWINGS FOR REVIEW AND ACCEPTANCE BY THE ENGINEER. ADDITIONALLY, ACCEPTANCE INDICATED ON THE ENGINEER'S COMMENT FORM, ALONG WITH THE COMPLETED, FINAL SUBMITTAL SHALL THEN BE SUBMITTED BY THE CONTRACTOR TO THE PERMITTING AGENCY AND APPROVED PRIOR TO INSTALLATION OF THESE ITEMS.

SPECITICATION SECTION	CODE REQUIRED DEFERRED SUBMITTALS FOR REVIEW BY PERMITTING AGENCY
01 88 15	ANCHORAGE AND BRACING
05 21 19	OPEN WEB STEEL JOIST FRAMING
05 52 16	ALUMINUM RAILINGS
21 13 00	FIRE-PROTECTION SPRINKLER SYSTEMS
31 63 29	DRILLED SHAFTS
40 05 15	PIPING SUPPORT SYSTEMS
OTHER	ANY EQUIPMENT OR COMPONENT IN WHICH A TECHNICAL SPECIFICATION REQUIRES SUBMITTAL OF EQUIPMENT OR ANCHORAGE SYSTEM CALCULATIONS

ALABAMA LICENSED No. 29827 PROFESSIONAL ENGINEER GARRICK DONNELL PETTY

Digitally signed by Garrick D Petty
Date: 2024.10.29 14:07:52-04'00'

NO.	DATE	REVISION	BY	APVD

DSGN G PETTY | DR KL DIAZ | CHK D EVERSON | APVD G PETTY

REUSE OF DOCUMENTS: THIS DOCUMENT, AND THE IDEAS AND DESIGNS INCORPORATED HEREIN, AS AN INSTRUMENT OF PROFESSIONAL SERVICE, IS THE PROPERTY OF JACOBS AND IS NOT TO BE USED, IN WHOLE OR IN PART, FOR ANY OTHER PROJECT WITHOUT THE WRITTEN AUTHORIZATION OF JACOBS.

PAUL B. KREBS WATER TREATMENT PLANT
IMPROVEMENTS
ANNISTON WATER WORKS & SEWER BOARD
CITY OF ANNISTON, ALABAMA

Jacobs

GENERAL
STRUCTURAL NOTES

VERIFY SCALE
BAR IS ONE INCH ON ORIGINAL DRAWING.
0 1"

DATE	OCTOBER 2024
PROJ	D3698100
DWG	01-G-007
SHEET	07 of 145

BID DOCUMENTS

©JACOBS 2024. ALL RIGHTS RESERVED.

PIPE AND FITTING SYMBOLS

DOUBLE LINE	SINGLE LINE	
		EXISTING PIPE
		NEW PIPE
		ABANDONED PIPE
		EXISTING PIPE TO BE REMOVED
		WELDED JOINT
		FLANGED JOINT (OR GROOVED WHERE SPECIFICALLY NOTED)
		MECHANICAL JOINT & PROPRIETARY RESTRAINED JOINT
		BELL & SPIGOT JOINT (LEADED)
		HUB & SPIGOT JOINT (RUBBER GASKET)
		BALL JOINT
		FLANGED COUPLING ADAPTER
		FLEXIBLE COUPLING
		METAL BELLOWS EXP JOINT
		ELASTOMER BELLOWS EXP JOINT
		ELBOW UP
		ELBOW DOWN
		TEE UP
		TEE DOWN
		CARBON STEEL FLANGED JOINT

DOUBLE LINE	SINGLE LINE	
		LATERAL UP
		LATERAL DOWN
		CONCENTRIC REDUCER
		ECCENTRIC REDUCER
		REDUCING BUSHING
		UNION
		CAP
		ANCHOR
		ELBOW, 90 DEGREE
		CROSS
		TEE
		ELBOW, 45 DEGREE
		LATERAL

NOTES:

1. ONLY FLANGED END CONNECTIONS ARE SHOWN HERE FOR DOUBLE LINE FITTINGS. FITTINGS WITH OTHER END PATTERNS ARE SHOWN SIMILARLY ON THE CONSTRUCTION DRAWINGS. ALSO SEE SECTION 40 27 00.
2. SYMBOLS SHOWN HERE FOR SINGLE LINE FITTINGS ARE GENERIC ONLY. REFER TO PIPING SPECIFICATIONS FOR SPECIFIC END CONNECTIONS FOR SINGLE LINE PIPE AND FITTINGS.
3. EXISTING PIPE AND EQUIPMENT IS SHOWN LIGHT-LINED AND/OR SCREENED AND IS NOTED AS EXISTING. NEW PIPING AND EQUIPMENT IS SHOWN HEAVY-LINED.

VALVE SYMBOLS

SINGLE LINE	DOUBLE LINE	
		GATE
	OR	BUTTERFLY
		GLOBE
		BALL
		PLUG
		NEEDLE
		DIAPHRAGM
		SWING CHECK
		HOSE VALVE (HV- X) OR (V-X) X = NO. IN SPECS
S		SAMPLE
		MUD
		PRESSURE RELIEF
		AIR AND/OR VACUUM RELEASE
		REGULATED SIDE PRESSURE CONTROL (INTERNAL PILOT)
		REGULATED SIDE PRESSURE CONTROL (EXTERNAL PILOT)
		MULTI-PORT VALVE, ARROWS INDICATE FLOW PATTERN. SEATING PORTS ARE IMPLIED BY INDICATED FLOW PATTERN.
		TELESCOPING SCUM VALVE

VALVE DESIGNATIONS

MANUAL VALVES AND CHECK VALVES

16"-V135-GV

VALVE SIZE

VALVE TYPE, SEE SECTION 40 27 02 FOR TYPE DEFINITION

CONTROL VALVES

NOTE: SEE I&C LEGEND SHEETS FOR TAGGING REQUIREMENTS. SEE VALVE SCHEDULE.

SELF-CONTAINED REGULATING VALVES

NOTE: SEE I&C LEGEND SHEETS FOR TAGGING REQUIREMENTS. SEE VALVE SCHEDULE.

PIPING SERVICE DESIGNATION

EXAMPLE:

16" WAS

16" WAS

SERVICE- SEE I&C LEGEND SHEETS OR PIPING SCHEDULE FOR ABBREVIATION MEANING

NOMINAL PIPE DIAMETER

OTHER SYMBOLS

PIPE TERMINATION

APPROXIMATE GRADE ELEVATION

MECHANICAL LEGEND AND NOTES

1. LAY PIPE TO UNIFORM GRADE BETWEEN INDICATED ELEVATION POINTS.
2. SIZE OF FITTINGS SHOWN ON DRAWINGS SHALL CORRESPOND TO ADJACENT STRAIGHT RUN OF PIPE, UNLESS OTHERWISE INDICATED. TYPE OF JOINT AND FITTING MATERIAL SHALL BE THE SAME AS SHOWN FOR ADJACENT STRAIGHT RUN OF PIPE.
3. LOCATION AND NUMBER OF PIPE HANGERS AND PIPE SUPPORTS SHOWN IS ONLY APPROXIMATE. CONTRACTOR SHALL DESIGN SUPPORTS AS SPECIFIED.
4. ALL JOINTS SHALL BE WATERTIGHT. WALL PIPES SHALL BE USED WHEREVER PIPING PASSES FROM A STRUCTURE TO BACKFILL.
5. ALL FLEXIBLE CONNECTORS AND COUPLING ADAPTERS SHALL BE PROVIDED WITH THRUST PROTECTION AS SPECIFIED, UNLESS OTHERWISE NOTED. THRUST PROTECTION SHALL BE ADEQUATE FOR TEST PRESSURES SPECIFIED.
6. SYMBOLS, LEGENDS, AND PIPE USE IDENTIFICATIONS SHOWN SHALL BE FOLLOWED THROUGHOUT THE DRAWINGS, WHEREVER APPLICABLE. NOT ALL OF THE VARIOUS PIPING COMPONENTS ARE NECESSARILY USED IN THE PROJECT.
7. PRIOR TO LEAKAGE TESTING, PIPE TO BE FULLY RESTRAINED.
8. NUMBER AND LOCATION OF UNIONS SHOWN ON DRAWINGS IS ONLY APPROXIMATE. PROVIDE ALL UNIONS NECESSARY TO FACILITATE CONVENIENT REMOVAL OF VALVES AND MECHANICAL EQUIPMENT.
9. WHERE A FLANGED COUPLING ADAPTER IS SHOWN, A STANDARD FLANGE SHALL BE JOINED TO THE COUPLING ADAPTER.

ALABAMA LICENSED PROFESSIONAL ENGINEER No. PE51134 Morgan Lakeman

NO.	DATE	REVISION	BY	APVD

DSGN M LAKEMAN | DR KL DIAZ | CHK M STICKLEY | APVD D HARRIS

PAUL B. KREBS WATER TREATMENT PLANT IMPROVEMENTS
ANNISTON WATER WORKS & SEWER BOARD
CITY OF ANNISTON, ALABAMA

REUSE OF DOCUMENTS: THIS DOCUMENT, AND THE IDEAS AND DESIGNS INCORPORATED HEREIN, AS AN INSTRUMENT OF PROFESSIONAL SERVICE, IS THE PROPERTY OF JACOBS AND IS NOT TO BE USED, IN WHOLE OR IN PART, FOR ANY OTHER PROJECT WITHOUT THE WRITTEN AUTHORIZATION OF JACOBS.

Jacobs

GENERAL
PROCESS MECHANICAL LEGEND

NTS
VERIFY SCALE
BAR IS ONE INCH ON ORIGINAL DRAWING.
0 1"

DATE	OCTOBER 2024
PROJ	D3698100
DWG	01-G-008
SHEET	08 of 145

BID DOCUMENTS

©JACOBS 2024. ALL RIGHTS RESERVED.

PLUMBING SYMBOLS

CO	CLEANOUT, BUILDING EXTERIOR
YCO-X	Y = F - FLOOR CLEANOUT D - DECK CLEANOUT W - WALL CLEANOUT X - NO. IN SPECIFICATION
HD-X	HUB DRAIN X - NO. IN SPECIFICATION
FD-X	FLOOR DRAIN X - NO. IN SPECIFICATION
CO	CLEANOUT PLUG (EXPOSED PIPING)
	ELBOW DOWN
	ELBOW UP
	TEE DOWN
	TEE DOWN WITH ELBOW
	ELBOW
	TEE
	TEE UP
	UNION
	PIPE CAP
	THERMOMETER
	PRESSURE GAUGE WITH COCK
	STRAINER
	HOSE VALVE
	REDUCER
	EMERGENCY EYEWASH AND SHOWER
	EYEWASH
	HOSE RACK

ABBREVIATIONS

AAV	AIR ADMITTANCE VALVE
ABV	ABOVE
AFF	ABOVE FINISHED FLOOR
AVTR	ACID RESISTANT VENT THRU ROOF
RPBP	REDUCED PRESSURE BACKFLOW PREVENTER
BV	BALL VALVE
CL	CENTERLINE
CO	CLEANOUT
CONN	CONNECTION
DEPT	DEPARTMENT
DN	DOWN
DT	DILUTION TANK
EL	ELEVATION
ETP	ELECTRONIC TRAP PRIMER
EWC	ELECTRIC WATER COOLER
EWH	HAND HELD EYE/FACE WASH
FA	FIXED AIR GAP DRAIN
FD	FLOOR DRAIN
FDC	FIRE DEPARTMENT CONNECTION
FLR	FLOOR
HD	HUB DRAIN
HV	HOSE VALVE
IE	INVERT ELEVATION
LAV	LAVATORY
LP	LABORATORY FAUCET
LSK	LAB SINK
MS	MOP SINK
ON	OVERFLOW NOZZLE
P	PUMP
RL	RAIN LEADER
RO	REVERSE OSMOSIS
SH	SHOWER
SK	SINK
SP	SUMP PUMP
SSH	SAFETY SHOWER/EYEWASH COMBINATION
SSK	SERVICE BASIN, OR SAMPLE SINK
TMV	THERMOSTATIC MIXING VALVE
TP	TRAP PRIMER VALVE
UR	URINAL
VTR	VENT THRU ROOF
WC	WATER CLOSET
WF	WASH FOUNTAIN
WHA	WATER HAMMER ARRESTER
WH	WATER HEATER
XXXXX	STANDARD DETAIL NUMBER

PLUMBING GENERAL NOTES

1. ALL BURIED AND CONCRETE ENCASED COPPER PIPING SHALL BE INSTALLED WITH A PROTECTIVE SLEEVE, OR WRAP, FOR ITS ENTIRE LENGTH. SLEEVE, OR WRAP, SHALL BE FLEXIBLE POLYETHYLENE MANUFACTURED FOR CONTINUOUS PIPE COVER APPLICATION. EXTEND SLEEVE, OR WRAP, 2 INCHES ABOVE FINISHED FLOOR.
2. ALL PIPE PENETRATIONS THROUGH FLOORS AND WALLS SHALL BE SLEEVED AND SEALED.
3. INSTALL TRAP PRIMER VALVES ON ALL FLOOR AND HUB DRAINS WITH "P" EXTENSION. FLOOR AND HUB DRAINS WITH "T" EXTENSIONS SHALL HAVE DEEP SEAL TRAPS.
4. PIPING ELEVATIONS SHOWN ARE APPROXIMATE, FIELD VERIFY PIPING ELEVATIONS WITH NEW AND EXISTING CONDITIONS PRIOR TO INSTALLATION.
5. PROVIDE OFFSETS IN THE PIPING RUNS, IN ADDITION TO WHAT IS SHOWN ON THE DRAWINGS, WHERE REQUIRED TO CLEAR EXISTING AND NEW; DUCT, STRUCTURE AND OTHER PIPING SYSTEMS.
6. PLUMBING VENTS THROUGH ROOF SHALL BE OFFSET AT ROOF TO PROVIDE MINIMUM DISTANCE OF 3'-6" FROM EXTERIOR WALL.
7. PROVIDE FULL PORT SERVICE VALVES AT EVERY WATER DROP TO FIXTURES, HOSE VALVE AND EQUIPMENT.
8. CLEANOUT TO GRADE FITTINGS, WHERE SANITARY DRAIN EXITS THE BUILDING, SHALL ALLOW FOR RODDING BOTH WAYS.
9. COORDINATE FINAL LOCATIONS OF FLOOR AND HUB DRAINS THAT RECEIVE CONDENSATE DRAINAGE FROM HVAC EQUIPMENT.
10. ALL PIPING LOCATED IN RETURN AIR PLENUM SPACES SHALL BE METAL.
11. PROVIDE CLEANOUTS IN SANITARY WASTE PIPING AS SHOWN ON THE DRAWINGS. FURNISH AND INSTALL ADDITIONAL CLEANOUTS AS REQUIRED BY CODE.
12. INSULATE ABOVE GRADE DRAINAGE PIPING THAT RECEIVES CONDENSATE FROM AIR CONDITIONING UNITS.
13. ALL PIPES PASSING THROUGH FIRE RATED WALLS AND FLOORS SHALL BE INSTALLED TO MEET APPLICABLE UL SYSTEM REQUIREMENTS PERTAINING TO THE TYPE OF CONSTRUCTION. REFER TO ARCHITECTURAL DRAWINGS FOR WALLS WHICH ARE FIRE RATED.
14. SPECIFICATIONS:
    a. FOR GENERAL PIPING SCHEDULE SEE SECTION 40 27 00.
    b. FOR PIPE SUPPORTS AND HANGERS SEE SECTION 40 05 15 AND DETAILS REFERENCED ON THE DRAWINGS.
    c. FOR PIPING INSULATION SEE SECTION 20 07 00.
    d. FOR PLUMBING PIPING SEE SECTION 22 10 01.
    e. FOR PLUMBING FIXTURES SEE SECTION 22 40 00.
    f. FOR PLUMBING EQUIPMENT SEE SECTION 22 30 00.
    g. FOR PIPE PAINTING AND COATINGS SEE SECTION 09 90 00.
    h. FOR PIPE IDENTIFICATION, SEE SECTION 09 90 00 AND SECTION 10 14 00.
15. THE INTENT OF THE DRAWINGS IS TO INDICATE THE GENERAL EXTENT OF WORK REQUIRED FOR THE PROJECT. THE DRAWINGS FOR PLUMBING WORK ARE DIAGRAMMATIC, SHOWING THE GENERAL LOCATION, TYPE FIXTURES AND EQUIPMENT REQUIRED. SOME PIPING SHOWN ON THE FLOOR PLANS MAY BE SHOWN WITH AN OFFSET FOR CLARITY. THE CONTRACTOR IS RESPONSIBLE FOR DESIGN, INSTALLATION AND DETAILED LAYOUT OF PLUMBING SYSTEMS INCLUDING REQUIRED ADDITIONAL OFFSETS, FITTINGS, VENTS, ETC. THE DESIGN SHALL BE IN ACCORDANCE WITH THE PLUMBING DRAWINGS AND APPLICABLE CODES. ACTUAL CONDITIONS SHALL GOVERN OVER WRITTEN DIMENSIONS AND WRITTEN DIMENSIONS SHALL GOVERN OVER ACTUAL DRAWINGS REPRESENTATION.
16. THE INSTALLATION OF THE REQUIRED PLUMBING SYSTEMS SHALL MEET OR EXCEED ALL CODES HAVING JURISDICTION AND SHALL RELATE TO ALL AUTHORITIES HAVING JURISDICTION.
17. CONTRACTOR IS RESPONSIBLE FOR THE JOB SITE CONDITIONS DURING THE COURSE OF CONSTRUCTION OF THIS PROJECT. THE CONTRACTOR SHALL FIELD VERIFY ALL DIMENSIONS AND CONDITIONS OF EXISTING CONSTRUCTION AND REPORT ANY INCONSISTENCIES TO THE ENGINEER BEFORE PROCEEDING WITH WORK AFFECTED BY SUCH INCONSISTENCIES. THE ENGINEER IS NOT RESPONSIBLE FOR, AND SHALL NOT BE HELD LIABLE FOR ANY MAJOR CHANGES DONE TO THE INTENDED DESIGN WITHOUT THE ENGINEER'S APPROVAL.
18. ALL BELOW FINISHED FLOOR/SLAB DRAIN PIPING SHALL BE CONCRETE ENCASED. SEE DETAIL 0330-016

VALVE SYMBOLS

	GATE
	BUTTERFLY
	GLOBE
	BALL
	GAS (PLUG)
	PRESSURE RELIEF VALVE
	BACKWATER CHECK VALVE
	CHECK VALVE
	PRESSURE REGULATING VALVE
	BALANCE VALVE (RHW)
	BACKFLOW PREVENTER

PIPING IDENTIFICATION

HW	HOT WATER
TW	TEPID WATER
PD	PROCESS DRAIN
SPD	SUMP PUMP DISCHARGE
W1	COLD WATER (POTABLE)
W2	COLD WATER (NON-POTABLE)

DRAWING NOTES

1. THIS IS A STANDARD LEGEND SHEET. SOME SYMBOLS OR ABBREVIATIONS ON THIS SHEET MAY NOT APPEAR ON THE PLANS.
2. FOR ADDITIONAL ABBREVIATIONS OF OTHER DIVISIONS, SEE OTHER LEGENDS FOR HVAC, MECHANICAL, AND STRUCTURAL/ ARCHITECTURAL.

ALABAMA LICENSED No. 32866 PROFESSIONAL ENGINEER ABEL VALIENTE

Date: 2024.10.24 13:45:44-04' 00'

NO.	DATE	REVISION	BY	APVD

DSGN B RUSSAKIS | DR J LOPEZ | CHK T PRICE | APVD B RUSSAKIS

PAUL B. KREBS WATER TREATMENT PLANT IMPROVEMENTS
ANNISTON WATER WORKS & SEWER BOARD
CITY OF ANNISTON, ALABAMA

REUSE OF DOCUMENTS: THIS DOCUMENT, AND THE IDEAS AND DESIGNS INCORPORATED HEREIN, AS AN INSTRUMENT OF PROFESSIONAL SERVICE, IS THE PROPERTY OF JACOBS AND IS NOT TO BE USED, IN WHOLE OR IN PART, FOR ANY OTHER PROJECT WITHOUT THE WRITTEN AUTHORIZATION OF JACOBS.

Jacobs

GENERAL
PLUMBING LEGEND

VERIFY SCALE
BAR IS ONE INCH ON ORIGINAL DRAWING.
0 1"

DATE	OCTOBER 2024
PROJ	D3698100
DWG	01-G-009
SHEET	09 of 145

BID DOCUMENTS

©JACOBS 2024. ALL RIGHTS RESERVED.

HEATING, VENTILATING, AND AIR CONDITIONING SYMBOLS

SUPPLY GRILLE OR REGISTER (SG, SR)

EXHAUST, RETURN, OR TRANSFER GRILLE OR REGISTER (EG, ER, RG, RR, TG, TR)

4-WAY THROW — 3-WAY THROW

2-WAY THROW — 1-WAY THROW

CEILING DIFFUSERS (CD)

CEILING EXHAUST, RETURN AND TRANSFER GRILLES AND REGISTERS (EG, ER, RG, RR, TG, TR)

MITERED ELBOW WITH TURNING VANES

RADIUS ELBOW

F — FIRE DAMPER

FS — FIRE/SMOKE DAMPER

S — SMOKE DAMPER

MANUAL BALANCING DAMPER

M — MOTORIZED DAMPER

BDD BDD — BACKDRAFT DAMPER

SD — DUCT MOUNTED SMOKE DETECTOR

ID — DUCT INSPECTION DOOR (HORIZONTAL OR VERTICAL)

R — INCLINED RISE (R) OR DROP (D) ARROW IN DIRECTION OF FLOW

45 DEG BRANCH CONNECTION WITH BALANCING DAMPER

12x10 8x8 — ECCENTRIC TRANSITION

12x10 6x6 — CONCENTRIC TRANSITION

FOT — TRANSITION, FOT = FLAT ON TOP FOB = FLAT ON BOTTOM

FLEX DUCT AND SPIN-IN CONNECTION WITH INTEGRAL BALANCING DAMPER

COMBINATION DISCONNECT AND MOTOR STARTER

WP — WEATHER PROOF COMBINATION DISCONNECT AND MOTOR STARTER

VIBRATION ISOLATOR

(200) — AIR FLOW QUANTITY: 200 SCFM

PRESSURE AND TEMPERATURE TEST PLUG

POINT OF CONNECTION, RENOVATION

POINT OF REMOVAL, DEMOLITION

AD — CEILING ACCESS DOOR

UC — PROVIDE DOOR UNDERCUT

DOOR GRILLE

— PHOTO NUMBER AND DIRECTION IDENTIFIER

FLEXIBLE CONNECTION (FC)

FLEXIBLE DUCTWORK (SINGLE LINE)

FLEXIBLE DUCTWORK (DOUBLE LINE)

24x16
1. RECTANGULAR DUCT
2. DIMENSIONS IN INCHES
3. FIRST DIMENSION VISIBLE SIDE

24/16
1. FLAT-OVAL DUCT
2. DIMENSIONS IN INCHES
3. FIRST DIMENSION VISIBLE SIDE

24Ø
1. ROUND DUCT
2. DIMENSIONS IN INCHES

24x16
1. INTERNAL INSULATION/SOUND ATTENUATION
2. AS SPECIFIED. DUCT DIMENSIONS SHOWN ARE NET INSIDE, TO INSIDE FACE OF LINER.
3. PROVIDE LINING WHERE SHOWN OR NOTED ON DWGS, AND AS DESCRIBED IN SPECIFICATIONS.

R — EXISTING EQUIPMENT, RELOCATED

X — INDICATES DUCT MOUNTED CONTROL DEVICE "X" SEE HVAC CONTROL SYMBOLS

SUPPLY OR INTAKE DUCT UP

SUPPLY OR INTAKE DUCT DOWN

RETURN OR EXHAUST DUCT UP

RETURN OR EXHAUST DUCT DOWN

AIR OUT OF OPENING

AIR INTO OPENING

EQUIPMENT NOMENCLATURE

MANUAL VALVES AND CHECK VALVES IDENTIFICATION

75 - V 400
- 400: VALVE TYPE, SEE SPECIFICATIONS
- V: VALVE DESIGNATION
- 75: SIZE OF VALVE

CONTROL VALVES IDENTIFICATION

M
- ACTUATOR SYMBOL
- FLOW DIRECTION
- VALVE SYMBOL
- FLOW DIRECTION

AIR OUTLET AND INLET IDENTIFICATION

SG1-1 (800)
- SG1-1: AIR INLET/OUTLET TAG, SEE SCHEDULE AND SPECIFICATIONS
- (800): FLOW RATE, CFM

HVAC EQUIPMENT TAG

85-UH-1
- 1: SEQUENTIAL UNIT NUMBER
- UH: HVAC EQUIPMENT IDENTIFICATION
- 85: BUILDING IDENTIFICATION NUMBER

VALVE SYMBOLS

GATE
BUTTERFLY
GLOBE
BALL
SEATING PORT ECCENTRIC PLUG
PLUG OR COCK
NEEDLE
SWING CHECK
BALL CHECK

B — BALANCING FITTING

F B — COMBINATION FLOWMETER AND BALANCING FITTING

F B S.O. — COMBINATION FLOWMETER, BALANCING FITTING AND SHUT-OFF VALVE

PRESSURE RELIEF

AIR VENT (AUTO)

AIR VENT (MANUAL)

REGULATED SIDE PRESSURE CONTROL

HVAC PIPING SYMBOLS

DOUBLE LINE	SINGLE LINE	
		WELDED JOINT
		GROOVED END JOINT
		FLANGED JOINT
		FLEXIBLE COUPLING
		GROOVED END ADAPTER FLANGE
		STEEL BELLOWS EXPANSION JOINT
		ELBOW UP
		ELBOW DOWN
		TEE UP
		TEE DOWN
		LATERAL UP
		CONCENTRIC REDUCER
		ECCENTRIC REDUCER
		UNION
		ANCHOR
		PIPE ALIGNMENT GUIDE
		FLEXIBLE (ELASTOMER) PIPE CONNECTION
		GAUGE

PIPING FLOW STREAM IDENTIFICATION

LPS	STEAM, LOW PRESSURE
HPS	STEAM, HIGH PRESSURE
SC	STEAM, CONDENSATE
CHS	CHILLED WATER, SUPPLY
CHR	CHILLED WATER, RETURN
HHS	HEATING HOT WATER, SUPPLY
HHR	HEATING HOT WATER, RETURN
CD	HVAC CONDENSATE DRAIN
CWS	CONDENSER WATER, SUPPLY
CWR	CONDENSER WATER, RETURN

HVAC CONTROLS SYMBOLS

MCC	DIVISION 16 MOTOR CONTROL CENTER
MS	MOTOR STARTER
M	ELECTRIC MOTOR
FZ	LOW-LIMIT FREEZE THERMOSTAT
VFD AFD	VARIABLE/ADJUSTABLE FREQUENCY DRIVE
	HVAC CONTROL PANEL (HCP)
S	SWITCH
OS	OCCUPANCY SENSOR
M M	MOTOR CONTROL VALVE (2-WAY), (3-WAY)
T	TEMPERATURE SENSOR OR THERMOSTAT
H	HUMIDITY SENSOR OR HUMIDISTAT
h	ENTHALPY SENSOR
FS	LIQUID FLOW SWITCH
F	DUCT MOUNTED AIRFLOW MONITORING STATION
	ANALOG OUTPUT, INPUT: DATA POINT TO DDC
	DIGITAL OUTPUT, INPUT: DATA POINT TO DDC
CS	CURRENT SENSOR
DP	DIFFERENTIAL PRESSURE SENSOR OR SWITCH
SP	STATIC PRESSURE SENSOR
SD	DUCT SMOKE DETECTOR
FI	AREA SMOKE DETECTOR
M	MOTORIZED DAMPER
R	RELAY
S	SOLENOID VALVE
FACP	DIVISION 16 FIRE ALARM CONTROL PANEL
PT	LIQUID LINE PRESSURE SENSOR AND SIGNAL TRANSMITTER
FIT	LIQUID FLOW INDICATING TRANSMITTER
FCV	FLOW CONTROL VALVE
	TURBINE LIQUID FLOW METER
	VENTURI FLOW METER
+ − ±	SPACE PRESSURIZATION POSITIVE, NEGATIVE, NEUTRAL
FSC	FAN SPEED CONTROLLER
	ALARM LIGHT AND HORN STATION
G	CONTROL PANEL LIGHT A= AMBER, G=GREEN, R=RED
−	CONTROL PANEL MANUAL KNOB, SEE DRAWINGS FOR SETTINGS
	CONTROL PANEL PUSH BUTTON, SEE DRAWINGS FOR FUNCTION

HVAC GENERAL NOTES

1. THIS IS A STANDARD LEGEND SHEET. SOME SYMBOLS OR ABBREVIATIONS ON THIS SHEET MAY NOT APPEAR ON THE PLANS.
2. FOR ADDITIONAL ABBREVIATIONS OF OTHER DIVISIONS, SEE OTHER LEGENDS FOR PLUMBING, MECHANICAL, AND STRUCTURAL/ ARCHITECTURAL.

ABBREVIATIONS AND EQUIPMENT ID

ACCU	AIR COOLED CONDENSING UNIT
ACU	AIR CONDITIONING UNIT
AHU	AIR HANDLING UNIT
BD	BALANCING DAMPER
BDD	BACKDRAFT DAMPER (GRAVITY)
CD	CEILING DIFFUSER
CF	CEILING FAN
CMF	CHEMICAL FEEDER
CRU	CONDENSATE RETURN UNIT
CSU	CEILING-MOUNTED AIR SUPPLY UNIT
CU	CONDENSING UNIT
EA	EXHAUST AIR
EDH	ELECTRIC DUCT HEATER
EF	EXHAUST FAN
EG	EXHAUST GRILLE
ER	EXHAUST REGISTER
ET	DIAPHRAGM EXPANSION TANK
EUH	ELECTRIC UNIT HEATER
FC	FLEXIBLE CONNECTION, FAIL CLOSE
FCU	FAN-COIL UNIT
FD	FIRE DAMPER
FO	FAIL OPEN
FRP	FIBERGLASS REINFORCED PLASTIC
FSD	FIRE SMOKE DAMPER
FZ	FREEZE STAT
HC	HEATING COIL
HCP	HVAC CONTROL PANEL
HD	HOOD, EXHAUST
HGR	HOT GLYCOL RETURN
HGS	HOT GLYCOL SUPPLY
HTP	HEAT TRANSFER PACKAGE
HVU	HEATING AND VENTILATING UNIT
HWP	HEATING WATER PUMP
HX	HEAT EXCHANGER
IRH	INFRARED HEATERS
JD	JET DIFFUSER
MAU	MAKEUP AIR UNIT
MB	MIXING BOX
MD	MOTORIZED DAMPER
ML	MOTORIZED LOUVER
OAI	OUTSIDE AIR INTAKE
OBD	OPPOSED-BLADE DAMPER (MANUAL)
OIT	OPERATOR INTERFACE TERMINAL
OS	OCCUPANCY SENSOR
OSA	OUTSIDE AIR
PA	PRESSURIZATION AIR
PCV	PRESSURE-CONTROL VALVE
PF	PREFILTER
PHC	PREHEAT COIL
PTAC	PACKAGED TERMINAL AC UNIT
PTS	PITOT-TUBE TESTING STATION
RA	RETURN AIR
RF	RETURN FAN
RG	RETURN GRILLE
RGH	RADIANT GAS-FIRED HEATING SYSTEM
RL	REFRIGERANT LIQUID PIPE
RR	RETURN REGISTER
RS	REFRIGERANT SUCTION PIPE
RV	ROOF VENTILATOR
SA	SOUND ATTENUATOR, SUPPLY AIR
SF	SUPPLY FAN
SP	STATIC PRESSURE
TG	TRANSFER GRILLE
UH	UNIT HEATER
VAV	VARIABLE AIR VOLUME UNIT
VMS	VENTILATION MONITORING STATION

ALABAMA LICENSED No. 32866 PROFESSIONAL ENGINEER ABEL VALIENTE

Date: 2024.10.24 13:46:59-0 4'00'

NO.	DATE	REVISION	BY	APVD

DSGN A VALIENTE | DR Y FITZGERALD | CHK T PRICE | APVD A VALIENTE

PAUL B. KREBS WATER TREATMENT PLANT IMPROVEMENTS
ANNISTON WATER WORKS & SEWER BOARD
CITY OF ANNISTON, ALABAMA

Jacobs

GENERAL
BUILDING MECHANICAL LEGEND

REUSE OF DOCUMENTS: THIS DOCUMENT, AND THE IDEAS AND DESIGNS INCORPORATED HEREIN, AS AN INSTRUMENT OF PROFESSIONAL SERVICE, IS THE PROPERTY OF JACOBS AND IS NOT TO BE USED, IN WHOLE OR IN PART, FOR ANY OTHER PROJECT WITHOUT THE WRITTEN AUTHORIZATION OF JACOBS.

VERIFY SCALE
BAR IS ONE INCH ON ORIGINAL DRAWING.
0 — 1"

DATE	OCTOBER 2024
PROJ	D3698100
DWG	01-G-010
SHEET	10 of 145

BID DOCUMENTS

©JACOBS 2024. ALL RIGHTS RESERVED.

INSTRUMENT IDENTIFICATION

EXAMPLE SYMBOLS

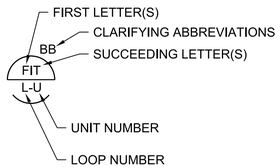

DIGITAL SYSTEM INTERFACES

- ▲ ANALOG INPUT
- ▼ ANALOG OUTPUT
- $\triangle_X$ DISCRETE INPUT
- ∇_X DISCRETE OUTPUT

INSTRUMENT IDENTIFICATION LETTERS TABLE

	FIRST-LETTER		SUCCEEDING-LETTERS		
LETTER	PROCESS OR INITIATING VARIABLE	MODIFIER	READOUT OR PASSIVE FUNCTION	READOUT OR PASSIVE FUNCTION	READOUT OR PASSIVE FUNCTION
A	ANALYSIS (+)		ALARM		
B	BURNER, COMBUSTION		BEACON	USER'S CHOICE (*)	USER'S CHOICE (*)
C	USER'S CHOICE (*)			CONTROL	
D	DENSITY (S.G.)	DIFFERENTIAL			
E	VOLTAGE		PRIMARY ELEMENT, SENSOR		
F	FLOW RATE	RATIO (FRACTION)			
G	USER'S CHOICE (*)		GLASS, GAUGE VIEWING DEVICE	GATE	
H	HAND (MANUAL)				HIGH
I	CURRENT (ELECTRICAL)		INDICATE		
J	POWER	SCAN			
K	TIME, TIME SCHEDULE	TIME RATE OF CHANGE		CONTROL STATION	
L	LEVEL		LIGHT (PILOT)		LOW
M	MOTION	MOMENTARY			MIDDLE, INTERMEDIATE
N	TORQUE		USER'S CHOICE (*)	USER'S CHOICE (*)	USER'S CHOICE (*)
O	USER'S CHOICE (*)		ORIFICE, RESTRICTION		
P	PRESSURE, VACUUM		POINT (TEST) CONNECTION		
Q	QUANTITY	INTEGRATE, TOTALIZE			
R	RADIATION		RECORD OR PRINT		
S	SPEED, FREQUENCY	SAFETY		SWITCH	
T	TEMPERATURE			TRANSMIT	
U	MULTI VARIABLE		MULTI FUNCTION	MULTI FUNCTION	MULTI FUNCTION
V	VIBRATION, MECHANICAL ANALYSIS			VALVE, DAMPER, LOUVER	
W	WEIGHT, FORCE		WELL		
X	UNCLASSIFIED (*)	X AXIS	UNCLASSIFIED (*)	UNCLASSIFIED (*)	UNCLASSIFIED (*)
Y	EVENT, STATE OR PRESENCE	Y AXIS		RELAY, COMPUTE, CONVERT	
Z	POSITION	Z AXIS		DRIVE, ACTUATOR, UNCLASSIFIED FINAL CONTROL ELEMENT	

TABLE BASED ON THE INTERNATIONAL SOCIETY OF AUTOMATION (ISA) STANDARD.

(+) WHEN USED, EXPLANATION IS SHOWN ADJACENT TO INSTRUMENT SYMBOL. SEE ABBREVIATIONS AND LETTER SYMBOLS.
(*) WHEN USED, DEFINE THE MEANING HERE FOR THE PROJECT.

GENERAL INSTRUMENT OR FUNCTIONAL SYMBOLS

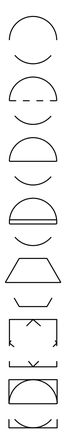

- FIELD MOUNTED
- REAR-OF-PANEL MOUNTED (OPERATOR INACCESSIBLE)
- PANEL MOUNTED (OPERATOR ACCESSIBLE)
- MCC MOUNTED
- COMPUTER FUNCTION
- PLC FUNCTION
- SHARED DISPLAY, SHARED CONTROL

TRANSDUCERS

A	ANALOG	I	CURRENT
CA	CAPACITANCE	P	PNEUMATIC
D	DIGITAL	PF	PULSE FREQUENCY
E	VOLTAGE	PD	PULSE DURATION
F	FREQUENCY	R	RESISTANCE
H	HYDRAULIC		

EXAMPLE

CURRENT TO PNEUMATIC TRANSDUCER (BACK OF PANEL, IN A FLOW LOOP)

ACCESSORY DEVICES

A	ALARM
C	CONTROLLER
I	INDICATOR
R	RECORDER
S	SWITCH
T	TRANSMITTER
X	UNCLASSIFIED

EXAMPLE

TRANSMITTER AS AN ACCESSORY TO A FLOW ELEMENT

SPECIAL CASES

ON AND OFF EVENT LIGHTS

ON-OFF HAND SWITCH, MAINTAINED CONTACT SWITCH (CONTROLLED DEVICE WILL RESTART ON RETURN OF POWER AFTER POWER FAILURE).

STOP-START HAND SWITCH MOMENTARY CONTACT SWITCHES (CONTROLLED DEVICE WILL NOT RESTART ON RETURN OF POWER AFTER POWER FAILURE).

LINE LEGEND

- PRIMARY PROCESS (CLOSED CONDUIT, DASHED LINE INDICATES ALTERNATE FLOW STREAM)
- SECONDARY PROCESS
- BYPASS PROCESS
- PROCESS (OPEN CHANNEL)
- ANALOG SIGNAL (4 TO 20 mAdc, ETC.)
- DISCRETE (ON/OFF, ETC.)
- C — COAX CABLE
- E — ETHERNET (CAT 6) CABLE
- O — FIBER OPTIC CABLE
- BUILDING OR FACILITY BOUNDARY
- PACKAGE SYSTEM EQUIPMENT
- SKID BOUNDARY
- TYPICAL BREAK
- P — POWER
- MSC — MANUFACTURER SUPPLIED CABLE

PARALLELING LINES

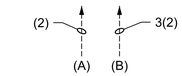

(A) TOTAL OF 2 SIGNALS

(B) 3 TYPICAL SETS OF 2 SIGNALS EACH. TOTAL OF 6 SIGNALS.

CONNECTING LINES

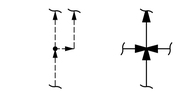

NON-CONNECTING LINES

INTERFACE SYMBOLS

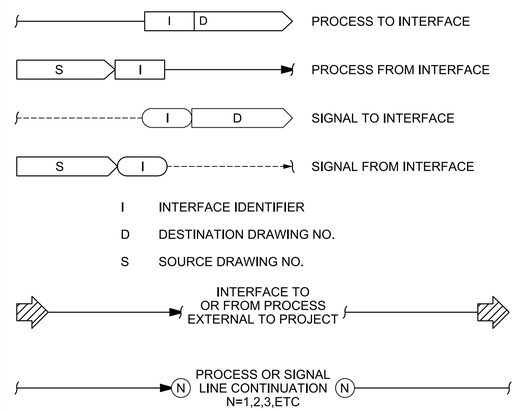

I INTERFACE IDENTIFIER

D DESTINATION DRAWING NO.

S SOURCE DRAWING NO.

SELF CONTAINED VALVE & EQUIPMENT TAG NUMBERS

D-W-X-Y

D	ARV	AIR RELEASE VALVE
	AVRV	AIR AND VACUUM RELEASE VALVE
	E	EJECTOR
	G	GATE
	M	MECHANICAL EQUIPMENT
	P	PUMP
	PCV	PRESSURE CONTROL VALVE
	PRV	PRESSURE RELIEF VALVE
	SV	SOLENOID VALVE
	T	TANK
	FCV	FLOW CONTROL VALVE
W		FACILITY IDENTIFICATION
X		LOOP NUMBER
Y		UNIT NUMBER

ABBREVIATIONS & LETTER SYMBOLS

AC	ALTERNATING CURRENT
AM	AUTO-MANUAL
CAM	COMPUTER-AUTO-MANUAL
CCS	CENTRAL CONTROL SYSTEM
CL_2 etc.	CHLORINE (TYPICAL: USE STANDARD CHEMICAL ELEMENT ABBREVIATIONS)
CM	COMPUTER-MANUAL
COD	CHEMICAL OXYGEN DEMAND
CP-X	CONTROL PANEL NO. X
DC	DIRECT CURRENT
DCS	DISTRIBUTED CONTROL SYSTEM
DCU	DISTRIBUTED CONTROL UNIT
DO	DISSOLVED OXYGEN
ENS	ETHERNET SWITCH
FCL_2	FREE CHLORINE RESIDUAL
FIPT	FEMALE IRON PIPE THREAD
FOPP	FIBER OPTIC PATCH PANEL
FOS	FAST-OFF-SLOW
FOSA	FAST-OFF-SLOW-AUTO
FOSR	FAST-OFF-SLOW-REMOTE
FP-W-X	FIELD PANEL NO. WX (W=UNIT PROCESS NUMBER X=PANEL NUMBER)
FR	FORWARD-REVERSE
HOA	HAND-OFF-AUTO
HOR	HAND-OFF-REMOTE
ISR	INTRINSICALLY SAFE RELAY
LEL	LOWER EXPLOSIVE LIMIT
LOS	LOCKOUT STOP
LR	LOCAL-REMOTE
MA	MANUAL-AUTO
M/C	MEDIA CONVERTER
MC	MODULATE-CLOSE
MCC-X	MOTOR CONTROL CENTER NO. X
MSC	MANUFACTURER SUPPLIED CABLE
OC	OPEN-CLOSE(D)
OCA	OPEN-CLOSE-AUTO
OCR	OPEN-CLOSE-REMOTE
OIT	OPERATOR INTERFACE TOUCHSCREEN
OO	ON-OFF
OOA	ON-OFF-AUTO
OOR	ON-OFF-REMOTE
ORP	OXIDATION REDUCTION POTENTIAL
OSC	OPEN-STOP-CLOSE
pH	HYDROGEN ION CONCENTRATION
PLC	PROGRAMMABLE LOGIC CONTROLLER
RAD	RADIO
RIO	REMOTE I/O UNIT
RM-X	REMOTE MULTIPLEXING MODULE NO. X
RTU-X	REMOTE TELEMETRY UNIT NO. X
RVSS	REDUCED VOLTAGE SOFT STARTER
SF	SLOWER-FASTER
SS	START-STOP
SSC	SUPERVISORY SET POINT CONTROL
TCL_2	TOTAL CHLORINE RESIDUAL
TOC	TOTAL ORGANIC CARBON
TOD	TOTAL OXYGEN DEMAND
UPS	UNINTERRUPTIBLE POWER SUPPLY
△	DIFFERENCE
Σ	SUM
×	MULTIPLY
÷	DIVIDE
F(X)	CHARACTERIZED
X^n	RAISED TO THE Nth POWER
√‾	SQUARE ROOT
AVG	AVERAGE
1:1	REPEAT OR BOOST
>	SELECT HIGHEST SIGNAL
<	SELECT LOWEST SIGNAL
}	BIAS
%	GAIN OR ATTENUATE
TURB	TURBIDITY
VHC	VOLATILE HYDROCARBONS
VIB	VIBRATION

GENERAL NOTES

1. COMPONENTS SHOWN WITH A DIAMOND (◆) ARE PART OF SECTION 40 90 00, PROCESS INSTRUMENTATION AND CONTROLS.
2. COMPONENTS AND PANELS ARE TO BE PROVIDED AS PART OF PACKAGED SYSTEM.
   - ✱1 - FINISHED WATER PUMPS
   - ✱2 - AIR STRIPPING TOWERS
   - ✱3 - SURGE TANK
   - ✱4 - COMPRESSOR
3. COMPONENTS AND PANELS SHOWN WITH A DOUBLE ASTERISK (✱✱) ARE TO BE PROVIDED UNDER DIVISION 26, ELECTRICAL.
4. THIS IS A STANDARD LEGEND. THEREFORE, NOT ALL OF THIS INFORMATION MAY BE USED ON THE PROJECT.

NO.	DATE	REVISION	BY	APVD

DSGN	DR	CHK	APVD
C HARRIS	A PASTRANA	G GRAY	C HARRIS

REUSE OF DOCUMENTS: THIS DOCUMENT, AND THE IDEAS AND DESIGNS INCORPORATED HEREIN, AS AN INSTRUMENT OF PROFESSIONAL SERVICE, IS THE PROPERTY OF JACOBS AND IS NOT TO BE USED, IN WHOLE OR IN PART, FOR ANY OTHER PROJECT WITHOUT THE WRITTEN AUTHORIZATION OF JACOBS.

PAUL B. KREBS WATER TREATMENT PLANT
IMPROVEMENTS
ANNISTON WATER WORKS & SEWER BOARD
CITY OF ANNISTON, ALABAMA

GENERAL
INSTRUMENTATION AND CONTROL
LEGEND SHEET 1

NTS
VERIFY SCALE
BAR IS ONE INCH ON ORIGINAL DRAWING.
0 1"

DATE	OCTOBER 2024
PROJ	D3698100
DWG	01-G-011
SHEET	11 of 145

BID DOCUMENTS

©JACOBS 2024. ALL RIGHTS RESERVED.

VALVE SYMBOLS

- GATE
- KNIFE GATE
- BUTTERFLY
- GLOBE
- BALL
- VEE-BALL
- PLUG
- SEAT PORT ECCENTRIC PLUG
- DIAPHRAGM
- PINCH
- NEEDLE
- SWING CHECK
- BALL CHECK
- BACKFLOW PREVENTER
- ROTARY
- TELESCOPE
- SAMPLE
- MUD
- PRESSURE RELIEF
- AIR AND/OR VACUUM RELEASE
- REGULATED SIDE PRESSURE CONTROL
- PRESSURE REGULATION (CLAY-TYPE)
- MULTI-PORT VALVE (GATE VALVE SHOWN. FOR OTHER VALVE TYPES, APPROPRIATE VALVE SYMBOL SHOWN.) SEAT PORTS ARE IMPLIED BY INDICATED FLOW PATTERN.
- ANGLE GATE

GATE SYMBOLS

- SLUICE
- BUTTERFLY
- FABRICATED SLIDE
- FLAP
- STOP LOG
- SHEAR

ACTUATOR SYMBOLS

- PNEUMATIC DIAPHRAGM SPRING-OPPOSED, SINGLE OR DOUBLE ACTING
- PNEUMATIC CYLINDER SINGLE OR DOUBLE ACTING ACTUATED BY ONE INPUT
- ELECTRIC MOTOR
- SOLENOID
- VALVE POSITIONER
- HYDRAULIC
- DIAPHRAGM, DIFFERENTIAL PRESSURE
- ELECTROHYDRAULIC
- MANUAL

NOTE:
ON LOSS OF PRIMARY POWER (PNEUMATIC, ELECTRICAL, OR HYDRAULIC)

XX: FO FAIL OPEN
FC FAIL CLOSED
FLP FAIL TO LAST POSITION

PRIMARY ELEMENT SYMBOLS

- PARSHALL FLUME
- WEIR
- ORFICE PLATE
- FLOW TUBE
- PITOT-STATIC
- VORTEX METER
- ULTRASONIC FLOWMETER
- ELECTROMAGNETIC FLOWMETER
- PROPELLER OR TURBINE METER
- THERMAL FLOWMETER
- LEVEL (BUBBLER TUBE)
- LS — LEVEL (FLOAT)
- FI — ROTAMETER
- DE — DENSITY METER
- XX — GENERIC
- LE — ULTRASONIC LEVEL
- LE — RADAR LEVEL

MISCELLANEOUS SYMBOLS

- VENT TO ATMOSPHERE
- AIR GAP
- DRIP TRAP
- PIG INSERT POINT
- PIG CATCH POINT
- SELF CONTAINED AIR SUPPLY
- AIR PURGE SET
- FLUSHING CONNECTION
- SEAL WATER SET
- WATER PURGE SET
- FLEXIBLE CONNECTION
- AERATOR
- DIAPHRAGM SEAL
- ANNULAR DIAPHRAGM SEAL
- COMPOSITE SAMPLER
- FLAME TRAP
- CALIBRATION COLUMN
- INLINE SILENCER
- BLIND FLANGE
- PIPE CAP
- STRAINER
- BASKET STRAINER
- WATER FILTER
- PULSATION DAMPENER
- EXPANSION CHAMBER
- WATER SOFTENER
- STATIC MIXER
- AIR FILTER
- FFLCPLLLX — PANEL CONTINUED ON SAME OR OTHER DRAWING; PANEL OUTLINE; PANEL NAME
- 120V — 120 VOLT, 60 HZ POWER
- 480V — 480 VOLT, 60 HZ POWER
- XX — AIR SET XX = SUPPLY PRESSURE IN PSIG.
- PLUG
- RECEPTACLE
- RUPTURE DISK (VACUUM)
- RUPTURE DISK (PRESSURE)
- HORN/STROBE
- SMOKE ALARM
- RADIO ANTENNA
- OR — INTERLOCK, SEE CONTROL DIAGRAMS
- VOICE COMMUNICATION POINT
- SKIMMING MECHANISM
- MIXER
- ELECTRIC MOTOR
- FSH, W1 — SAFETY SHOWER / EYEWASH
- DOUBLE WALLED PIPE
- WEIGHT SCALE
- HEATER

PUMP AND COMPRESSOR SYMBOLS

- BLOWER OR FAN (CENTRIFUGAL)
- CENTRIFUGAL PUMP
- VERTICAL CAN OR WELL PUMP
- RECIPROCATING OR METERING PUMP (POSITIVE DISPLACEMENT)
- COMPRESSOR

XX: AS ADJUSTABLE SPEED
CS-1 CONSTANT SPEED (SINGLE SPEED)
CS-2 CONSTANT SPEED (TWO SPEED)

LINE SIZE AND FLOW STREAM IDENTIFICATION

(FOR REFERENCE ONLY. SEE SITE AND MECHANICAL DRAWINGS)

RS — SERVICE

SERVICE

DR	DRAIN
FL	FLUORIDE
FW	FINISHED WATER
OF	OVERFLOW
PA	PLANT AIR
RW	RAW WATER
SD	STORM DRAIN
V	VENT
W1	NO. 1 (POTABLE) WATER
W2	NO. 2 (NON-POTABLE) WATER
W3	NO. 3 (PLANT) WATER

ALABAMA LICENSED PROFESSIONAL ENGINEER No. 32425 CHRIS CARTER LEHMAN

NO.	DATE	REVISION	BY	APVD

DSGN C HARRIS | DR A PASTRANA | CHK G GRAY | APVD C HARRIS

PAUL B. KREBS WATER TREATMENT PLANT IMPROVEMENTS
ANNISTON WATER WORKS & SEWER BOARD
CITY OF ANNISTON, ALABAMA

Jacobs

GENERAL
INSTRUMENTATION AND CONTROL LEGEND SHEET 2

NTS
VERIFY SCALE
BAR IS ONE INCH ON ORIGINAL DRAWING.
0 1"

DATE	OCTOBER 2024
PROJ	D3698100
DWG	01-G-012
SHEET	12 of 145

REUSE OF DOCUMENTS: THIS DOCUMENT, AND THE IDEAS AND DESIGNS INCORPORATED HEREIN, AS AN INSTRUMENT OF PROFESSIONAL SERVICE, IS THE PROPERTY OF JACOBS AND IS NOT TO BE USED, IN WHOLE OR IN PART, FOR ANY OTHER PROJECT WITHOUT THE WRITTEN AUTHORIZATION OF JACOBS.

BID DOCUMENTS

©JACOBS 2024. ALL RIGHTS RESERVED.

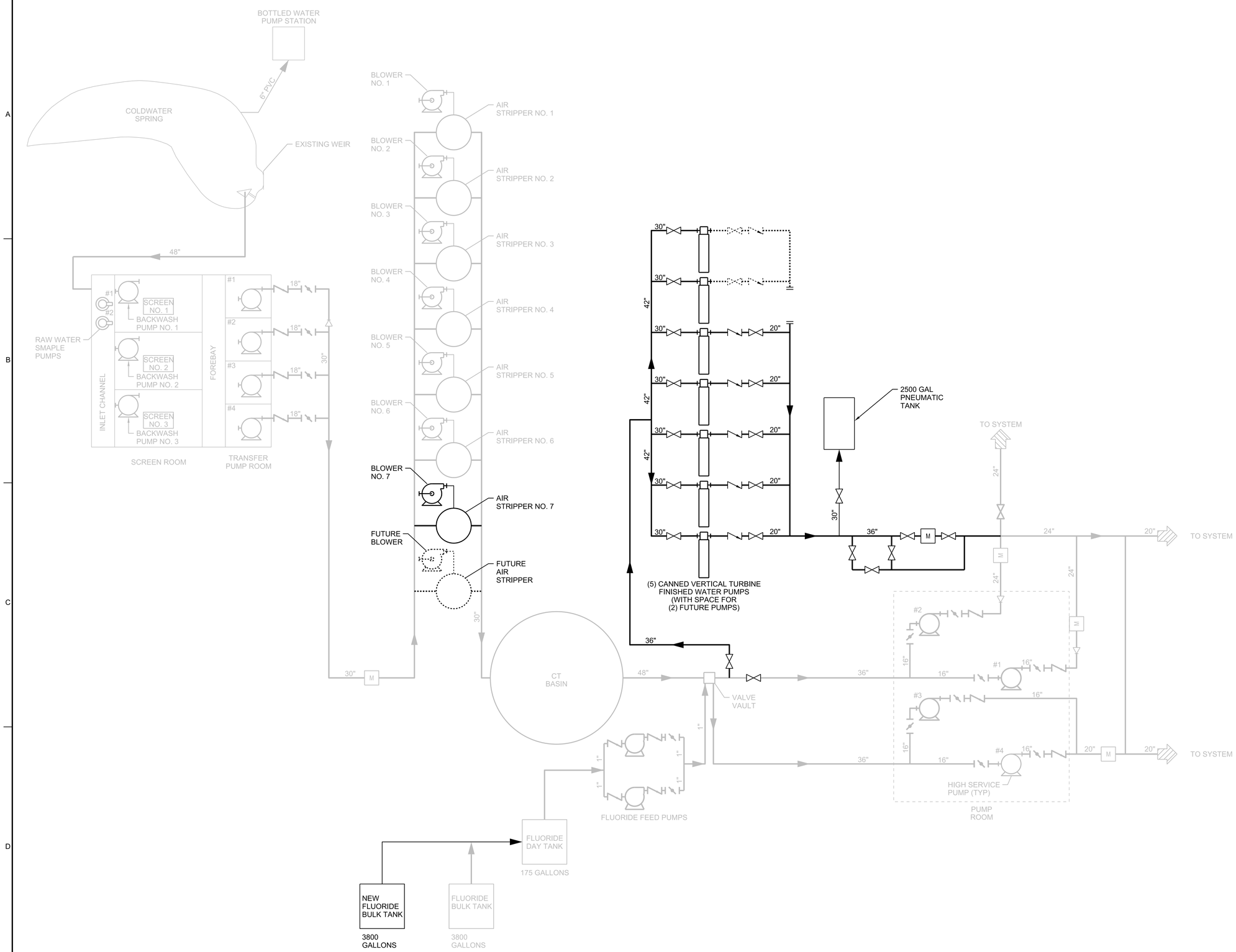

ALABAMA LICENSED PROFESSIONAL ENGINEER No. PE51134 Morgan Lakeman BRIAN SUMMERLIN LAKEMAN

NO.	DATE	REVISION	BY	APVD

DSGN M LAKEMAN | DR A PASTRANA | CHK M STICKLEY | APVD M LAKEMAN

PAUL B. KREBS WATER TREATMENT PLANT
IMPROVEMENTS
ANNISTON WATER WORKS & SEWER BOARD
CITY OF ANNISTON, ALABAMA

GENERAL

PROCESS FLOW DIAGRAM

REUSE OF DOCUMENTS: THIS DOCUMENT, AND THE IDEAS AND DESIGNS INCORPORATED HEREIN, AS AN INSTRUMENT OF PROFESSIONAL SERVICE, IS THE PROPERTY OF JACOBS AND IS NOT TO BE USED, IN WHOLE OR IN PART, FOR ANY OTHER PROJECT WITHOUT THE WRITTEN AUTHORIZATION OF JACOBS.

NTS
VERIFY SCALE
BAR IS ONE INCH ON ORIGINAL DRAWING.
0 1"

DATE	OCTOBER 2024
PROJ	D3698100
DWG	01-G-013
SHEET	13 of 145

BID DOCUMENTS

©JACOBS 2024. ALL RIGHTS RESERVED.

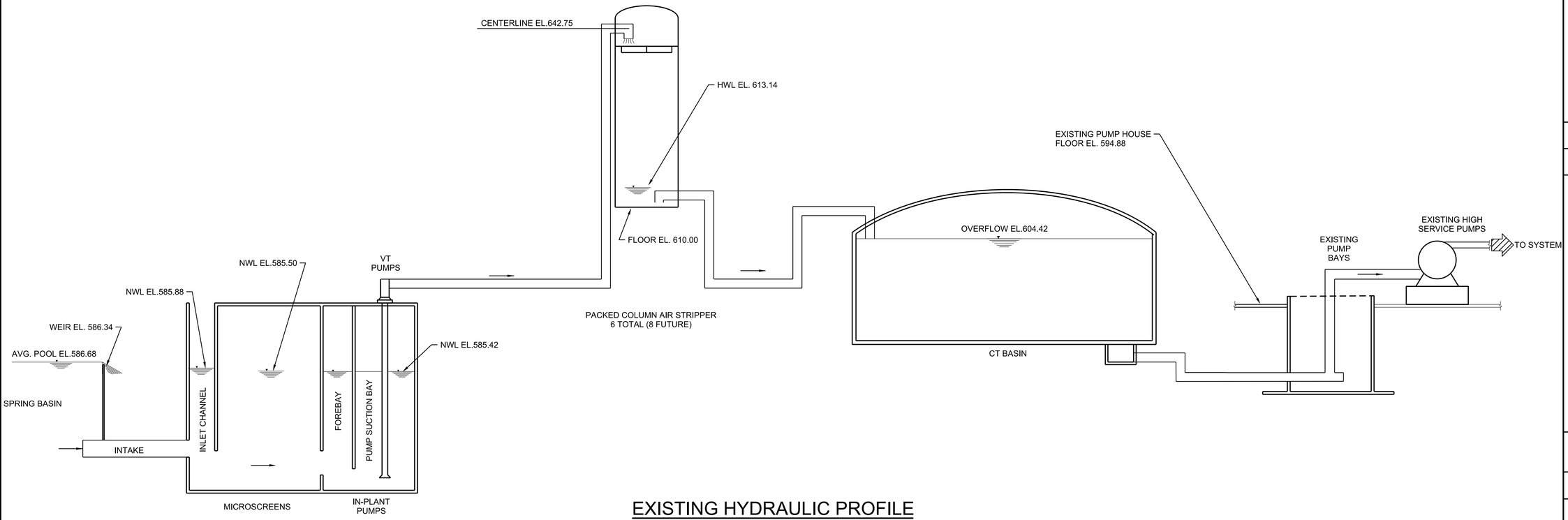

EXISTING HYDRAULIC PROFILE

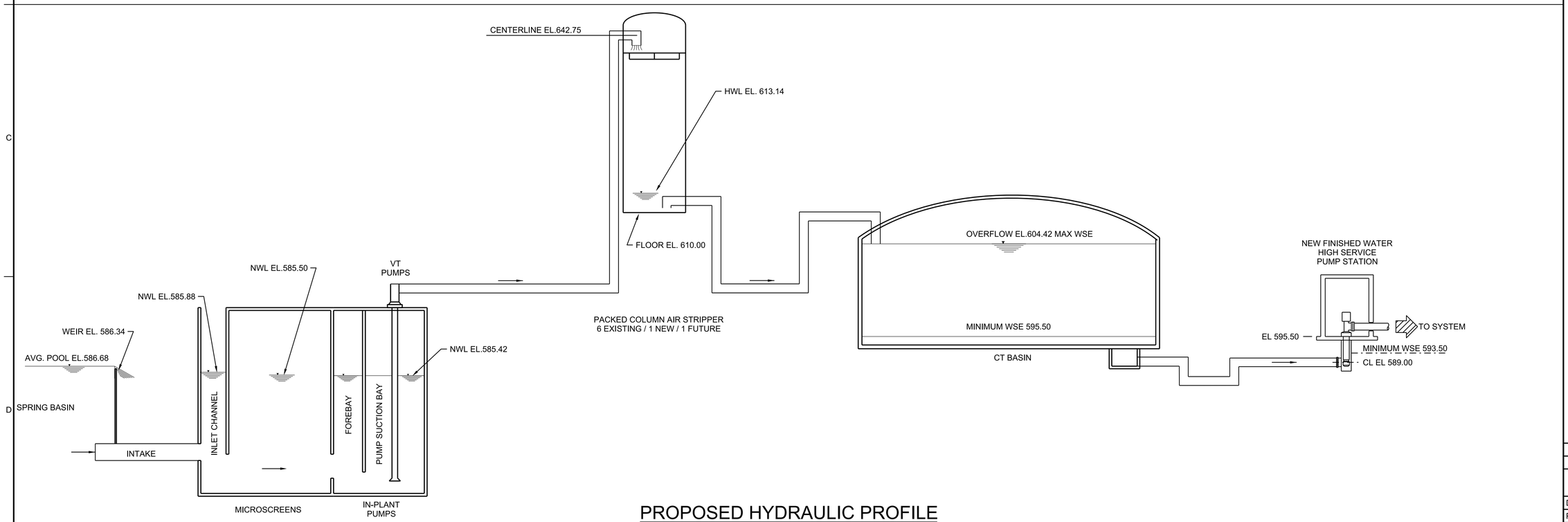

PROPOSED HYDRAULIC PROFILE

ALABAMA LICENSED PROFESSIONAL ENGINEER MORGAN SUMMERLIN LAKEMAN

Morgan Lakeman

Morgan Summerlin Lakeman, PE51134
Professional Engineer
Jacobs Engineering Group Inc.
Email: morgan.lakeman@jacobs.com
Date: 2024.10.22 09:47:02 -05'00'

NO.	DATE	REVISION	BY	APVD

DSGN M LAKEMAN | DR P HAMERLIK | CHK M STICKLEY | APVD M LAKEMAN

REUSE OF DOCUMENTS: THIS DOCUMENT, AND THE IDEAS AND DESIGNS INCORPORATED HEREIN, AS AN INSTRUMENT OF PROFESSIONAL SERVICE, IS THE PROPERTY OF JACOBS AND IS NOT TO BE USED, IN WHOLE OR IN PART, FOR ANY OTHER PROJECT WITHOUT THE WRITTEN AUTHORIZATION OF JACOBS.

PAUL B. KREBS WATER TREATMENT PLANT
IMPROVEMENTS
ANNISTON WATER WORKS & SEWER BOARD
CITY OF ANNISTON, ALABAMA

Jacobs

GENERAL
HYDRAULIC PROFILE

VERIFY SCALE
BAR IS ONE INCH ON ORIGINAL DRAWING.
0 1"

DATE	OCTOBER 2024
PROJ	D3698100
DWG	01-G-014
SHEET	14 of 145

BID DOCUMENTS

FILENAME:01-G-014_D3698100.dgn PLOT DATE: 10/22/2024 PLOT TIME: 12:50:05 PM

©JACOBS 2024. ALL RIGHTS RESERVED.

GENERAL NOTES

1. EXISTING CHLORINE LINE SHALL BE FIELD LOCATED PRIOR TO INSTALLING SEDIMENT FENCE.

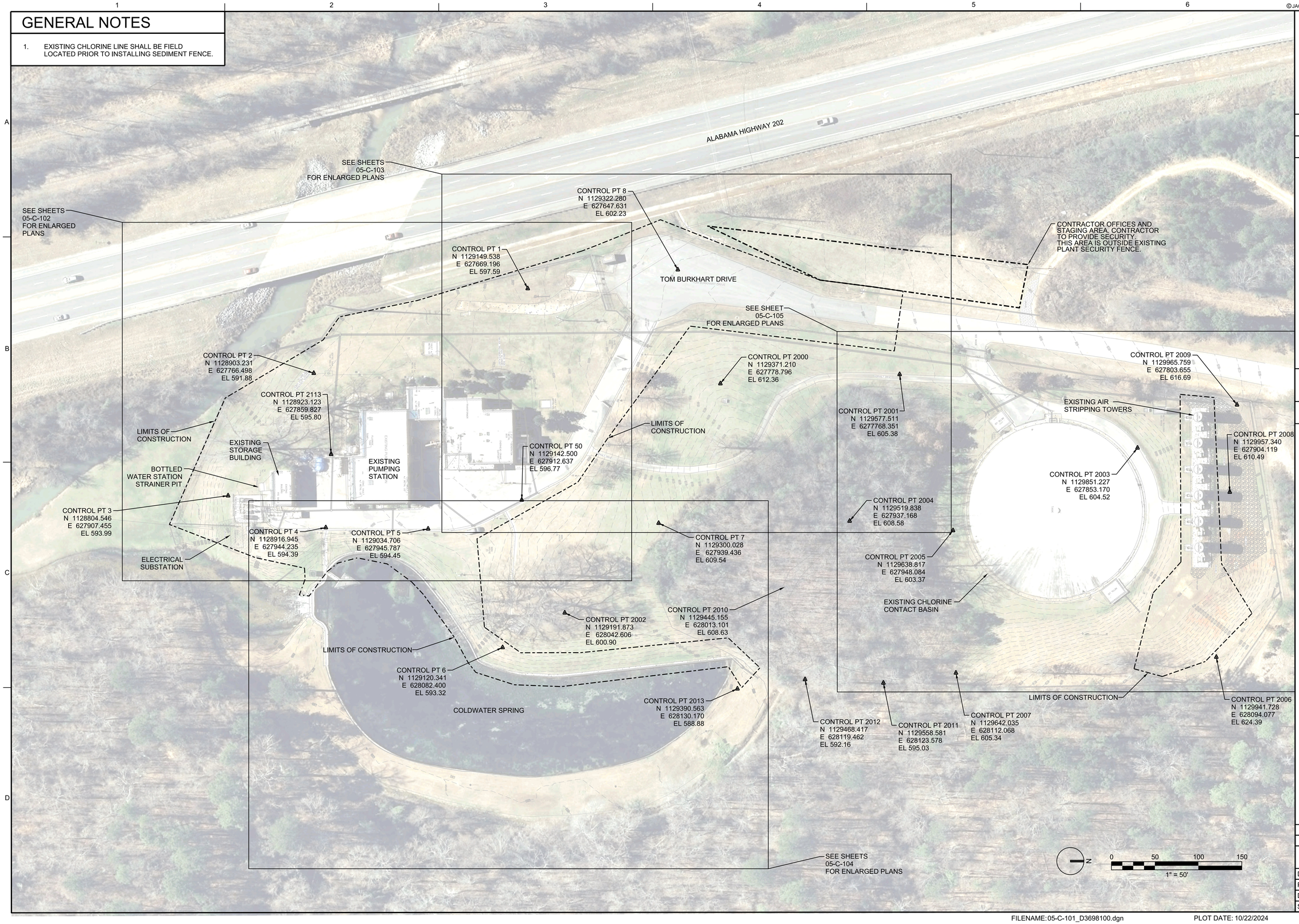

ALABAMA LICENSED No. PE51302 PROFESSIONAL ENGINEER ALLISON ELIZABETH MAYES

NO.	DATE	REVISION	BY	APVD

DSGN	L MAYES	DR	L MAYES
CHK	J RAMOS	APVD	L MAYES

PAUL B. KREBS WATER TREATMENT PLANT
IMPROVEMENTS
ANNISTON WATER WORKS & SEWER BOARD
CITY OF ANNISTON, ALABAMA

REUSE OF DOCUMENTS: THIS DOCUMENT, AND THE IDEAS AND DESIGNS INCORPORATED HEREIN, AS AN INSTRUMENT OF PROFESSIONAL SERVICE, IS THE PROPERTY OF JACOBS AND IS NOT TO BE USED, IN WHOLE OR IN PART, FOR ANY OTHER PROJECT WITHOUT THE WRITTEN AUTHORIZATION OF JACOBS.

Jacobs

CIVIL

OVERALL EXISTING CONDITIONS SITE PLAN

VERIFY SCALE
BAR IS ONE INCH ON ORIGINAL DRAWING.
0 1"

DATE	OCTOBER 2024
PROJ	D3698100
DWG	05-C-101
SHEET	15 of 145

BID DOCUMENTS

©JACOBS 2024. ALL RIGHTS RESERVED.

GENERAL NOTES

1. EXISTING CHLORINE LINE SHALL BE FIELD LOCATED PRIOR TO INSTALLING SEDIMENT FENCE.
2. CONTRCTOR TO ENSURE PROTECTION OF COLDWATER SPRING DURING CONSTRUCTION THROUGH ANY TEMPORARY EROSION CONTROL MEANS DEEMED NECESSARY BY CONTRACTOR AND APPROVED BY ENGINEER.

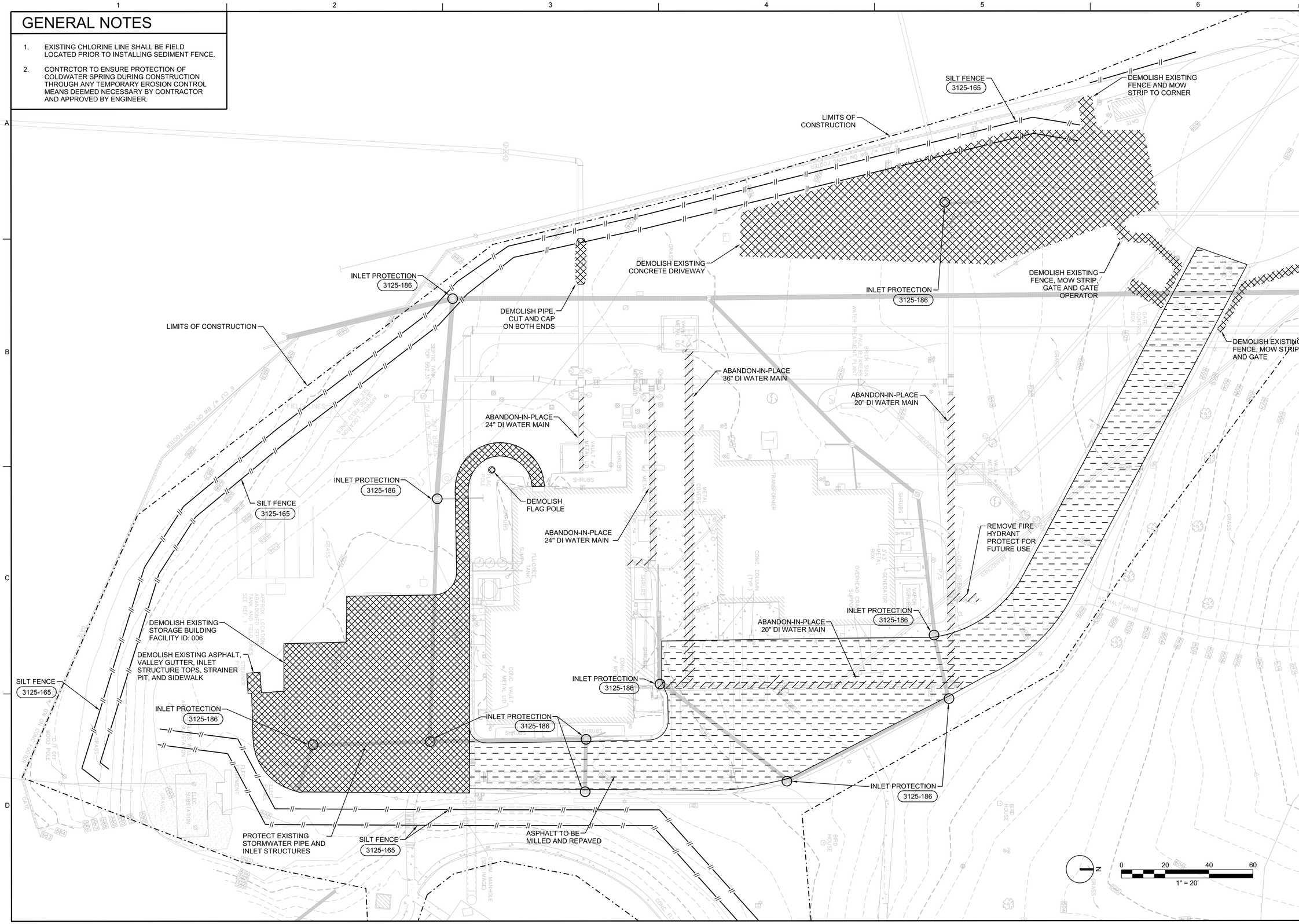

ALABAMA LICENSED No. PE51302 PROFESSIONAL ENGINEER LAUREN ELIZABETH MAYES

NO.	DATE	REVISION	BY	APVD

DSGN L MAYES | DR L MAYES | CHK J RAMOS | APVD L MAYES

PAUL B. KREBS WATER TREATMENT PLANT
IMPROVEMENTS
ANNISTON WATER WORKS & SEWER BOARD
CITY OF ANNISTON, ALABAMA

REUSE OF DOCUMENTS: THIS DOCUMENT, AND THE IDEAS AND DESIGNS INCORPORATED HEREIN, AS AN INSTRUMENT OF PROFESSIONAL SERVICE, IS THE PROPERTY OF JACOBS AND IS NOT TO BE USED, IN WHOLE OR IN PART, FOR ANY OTHER PROJECT WITHOUT THE WRITTEN AUTHORIZATION OF JACOBS.

Jacobs

CIVIL

DEMOLITION AND EROSION CONTROL SOUTH PLANT SITE

VERIFY SCALE
BAR IS ONE INCH ON ORIGINAL DRAWING.
0 1"

DATE	OCTOBER 2024
PROJ	D3698100
DWG	05-C-102
SHEET	16 of 145

BID DOCUMENTS

FILENAME:05-C-102_D3698100.dgn PLOT DATE: 10/22/2024 PLOT TIME: 12:53:06 PM

©JACOBS 2024. ALL RIGHTS RESERVED.

GENERAL NOTES

1. EXISTING CHLORINE LINE SHALL BE FIELD LOCATED PRIOR TO INSTALLING SEDIMENT FENCE.
2. CONTRCTOR TO ENSURE PROTECTION OF COLDWATER SPRING DURING CONSTRUCTION THROUGH ANY TEMPORARY EROSION CONTROL MEANS DEEMED NECESSARY BY CONTRACTOR AND APPROVED BY ENGINEER.

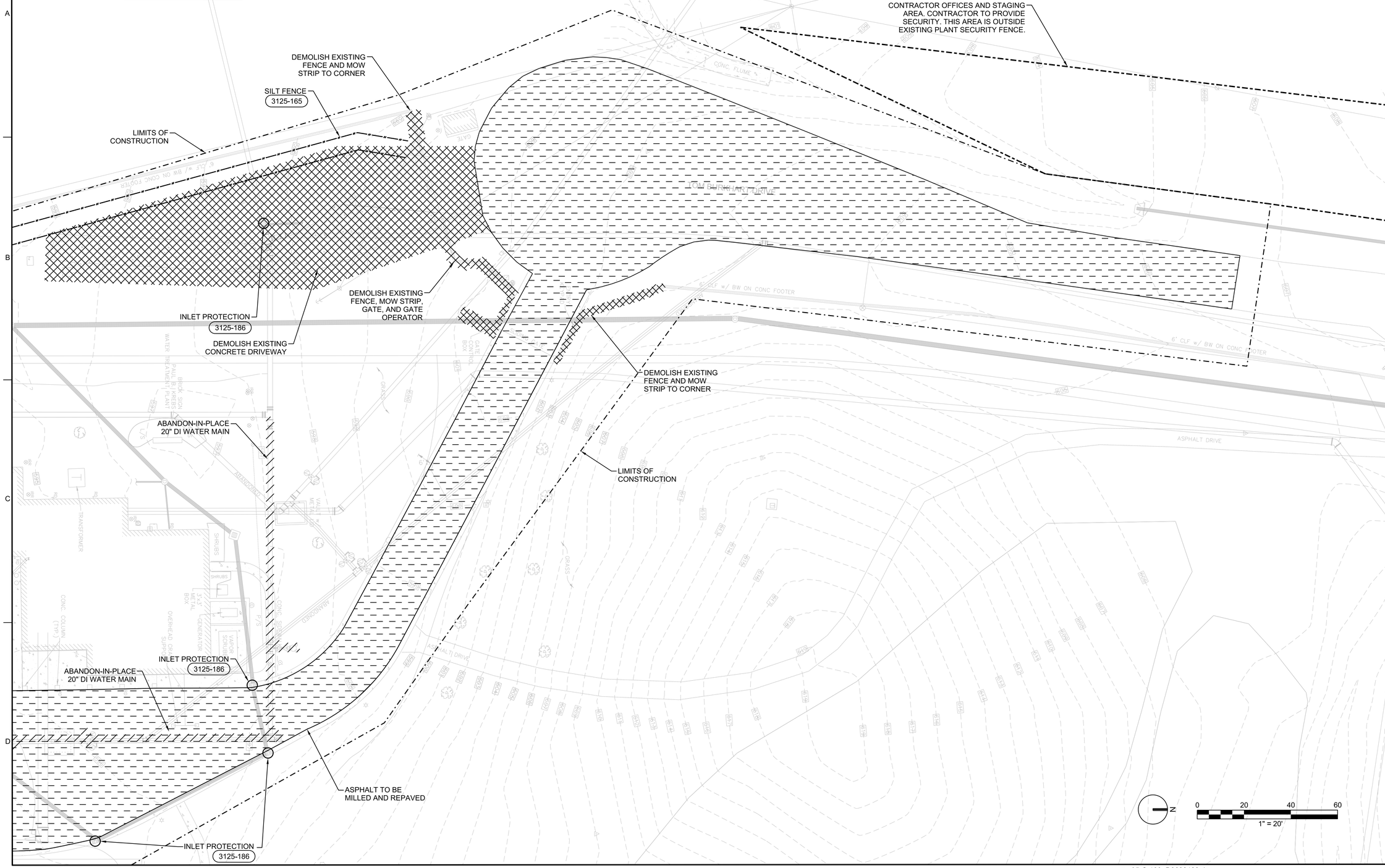

ALABAMA LICENSED No. PE51302 PROFESSIONAL ENGINEER LAUREN ELIZABETH MAYES

NO.	DATE	REVISION	BY	APVD

DSGN L MAYES | DR L MAYES | CHK J RAMOS | APVD L MAYES

PAUL B. KREBS WATER TREATMENT PLANT
IMPROVEMENTS
ANNISTON WATER WORKS & SEWER BOARD
CITY OF ANNISTON, ALABAMA

REUSE OF DOCUMENTS: THIS DOCUMENT, AND THE IDEAS AND DESIGNS INCORPORATED HEREIN, AS AN INSTRUMENT OF PROFESSIONAL SERVICE, IS THE PROPERTY OF JACOBS AND IS NOT TO BE USED, IN WHOLE OR IN PART, FOR ANY OTHER PROJECT WITHOUT THE WRITTEN AUTHORIZATION OF JACOBS.

Jacobs

CIVIL

DEMOLITION AND EROSION CONTROL NORTH PLANT SITE

VERIFY SCALE
BAR IS ONE INCH ON ORIGINAL DRAWING.
0 1"

DATE	OCTOBER 2024
PROJ	D3698100
DWG	05-C-103
SHEET	17 of 145

BID DOCUMENTS

FILENAME: 05-C-103_D3698100.dgn PLOT DATE: 10/22/2024 PLOT TIME: 1:05:45 PM

©JACOBS 2024. ALL RIGHTS RESERVED.

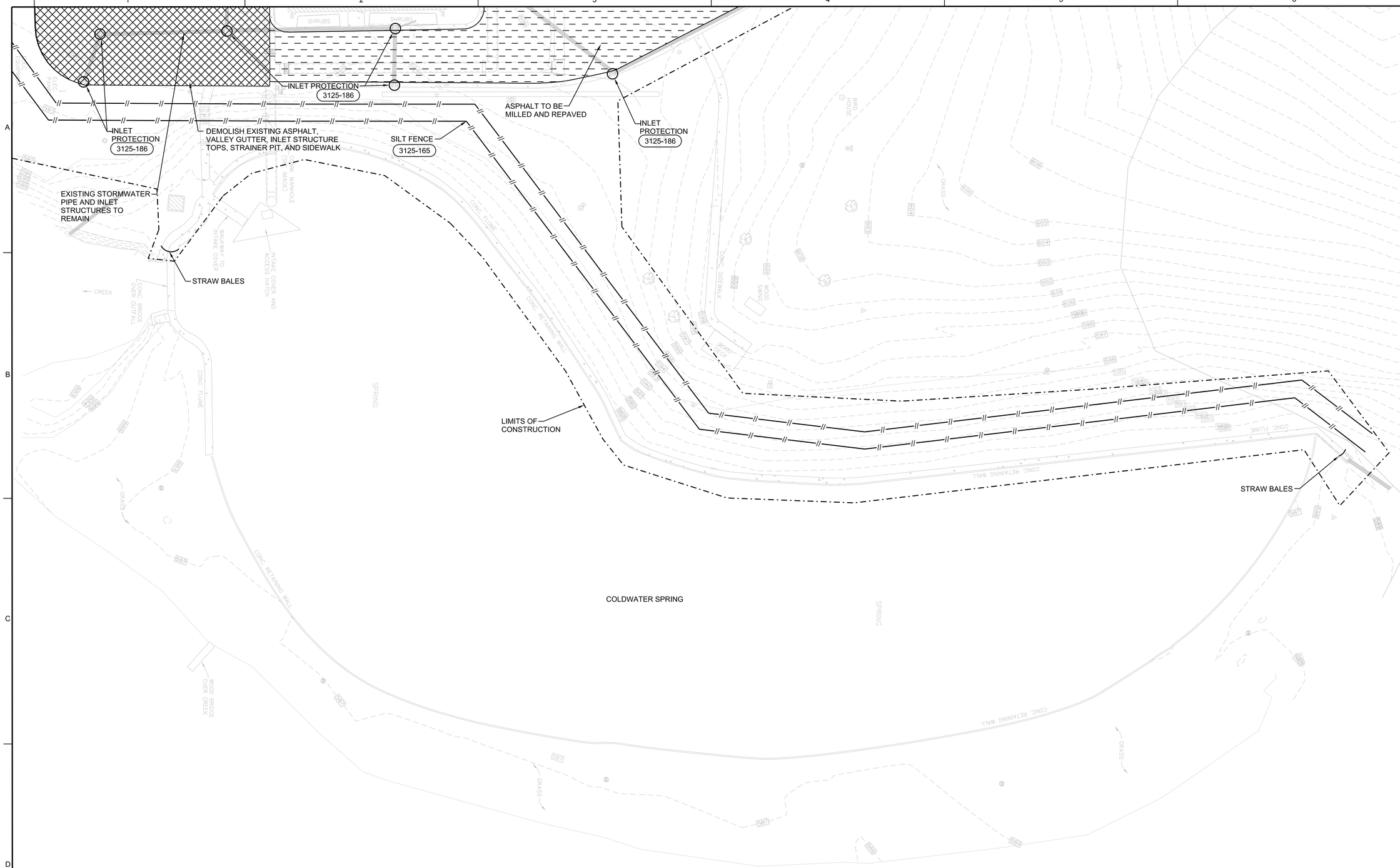

GENERAL NOTES

1. EXISTING CHLORINE LINE SHALL BE FIELD LOCATED PRIOR TO INSTALLING SEDIMENT FENCE.
2. CONTRCTOR TO ENSURE PROTECTION OF COLDWATER SPRING DURING CONSTRUCTION THROUGH ANY TEMPORARY EROSION CONTROL MEANS DEEMED NECESSARY BY CONTRACTOR AND APPROVED BY ENGINEER.

ALABAMA LICENSED No. PE51302 PROFESSIONAL ENGINEER ALLISON ELIZABETH MAYES

NO.	DATE	REVISION	BY	APVD

DSGN	L MAYES	DR	L MAYES
CHK	J RAMOS	APVD	L MAYES

PAUL B. KREBS WATER TREATMENT PLANT
IMPROVEMENTS
ANNISTON WATER WORKS & SEWER BOARD
CITY OF ANNISTON, ALABAMA

REUSE OF DOCUMENTS: THIS DOCUMENT, AND THE IDEAS AND DESIGNS INCORPORATED HEREIN, AS AN INSTRUMENT OF PROFESSIONAL SERVICE, IS THE PROPERTY OF JACOBS AND IS NOT TO BE USED, IN WHOLE OR IN PART, FOR ANY OTHER PROJECT WITHOUT THE WRITTEN AUTHORIZATION OF JACOBS.

Jacobs

CIV/L

DEMOLITION AND EROSION CONTROL COLDWATER SPRING

VERIFY SCALE
BAR IS ONE INCH ON ORIGINAL DRAWING.
0 1"

DATE	OCTOBER 2024
PROJ	D3698100
DWG	05-C-104
SHEET	18 of 145

BID DOCUMENTS

FILENAME:05-C-104_D3698100.dgn PLOT DATE: 10/22/2024 PLOT TIME: 12:54:12 PM

©JACOBS 2024. ALL RIGHTS RESERVED.

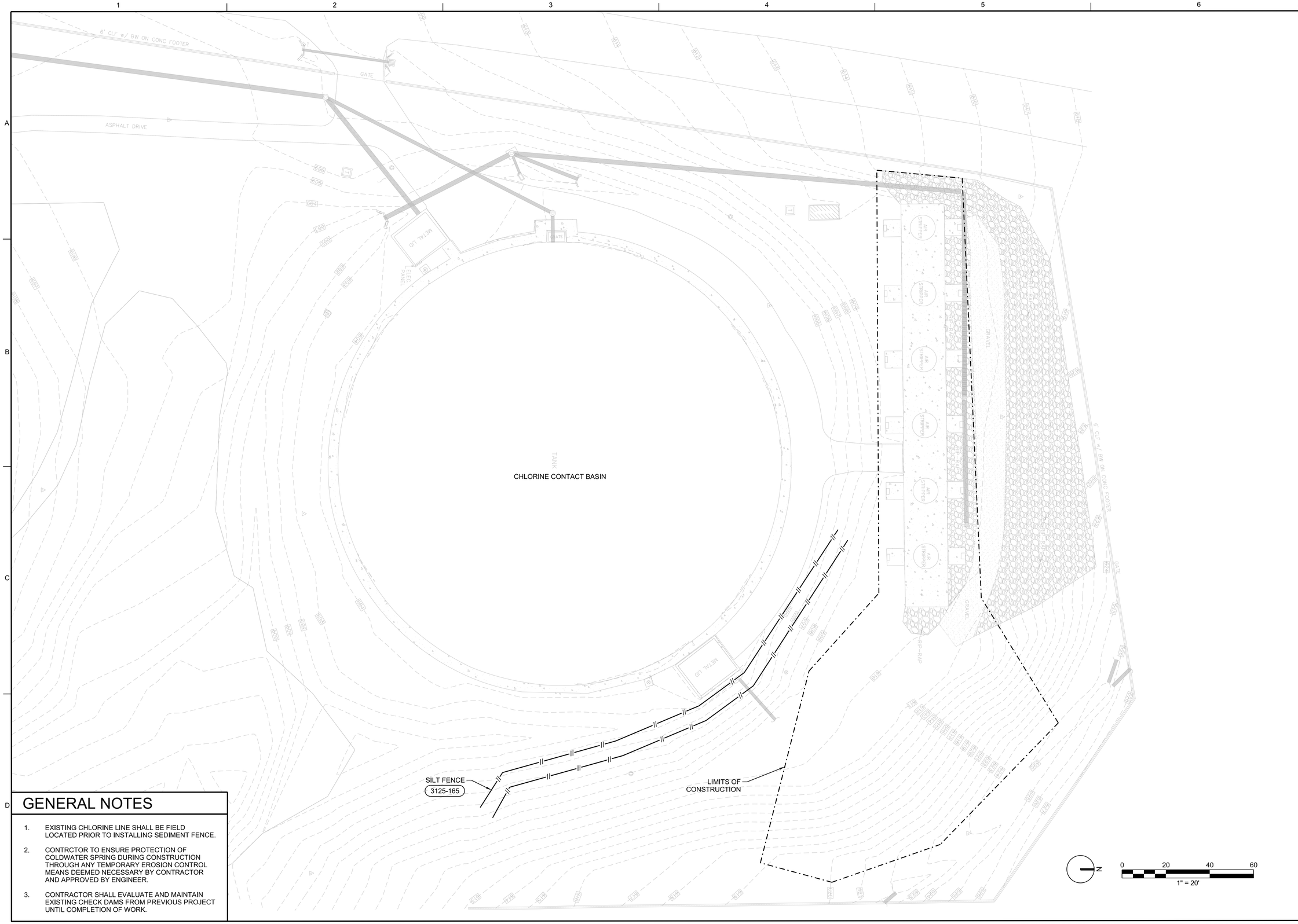

GENERAL NOTES

1. EXISTING CHLORINE LINE SHALL BE FIELD LOCATED PRIOR TO INSTALLING SEDIMENT FENCE.
2. CONTRCTOR TO ENSURE PROTECTION OF COLDWATER SPRING DURING CONSTRUCTION THROUGH ANY TEMPORARY EROSION CONTROL MEANS DEEMED NECESSARY BY CONTRACTOR AND APPROVED BY ENGINEER.
3. CONTRACTOR SHALL EVALUATE AND MAINTAIN EXISTING CHECK DAMS FROM PREVIOUS PROJECT UNTIL COMPLETION OF WORK.

ALABAMA LICENSED No. PE51302 PROFESSIONAL ENGINEER LAUREN ELIZABETH MAYES

NO.	DATE	REVISION	BY	APVD

DSGN L MAYES | DR L MAYES | CHK J RAMOS | APVD L MAYES

PAUL B. KREBS WATER TREATMENT PLANT
IMPROVEMENTS
ANNISTON WATER WORKS & SEWER BOARD
CITY OF ANNISTON, ALABAMA

REUSE OF DOCUMENTS: THIS DOCUMENT, AND THE IDEAS AND DESIGNS INCORPORATED HEREIN, AS AN INSTRUMENT OF PROFESSIONAL SERVICE, IS THE PROPERTY OF JACOBS AND IS NOT TO BE USED, IN WHOLE OR IN PART, FOR ANY OTHER PROJECT WITHOUT THE WRITTEN AUTHORIZATION OF JACOBS.

Jacobs

CIVIL

DEMOLITION AND EROSION CONTROL AIR STRIPPING TOWERS

VERIFY SCALE
BAR IS ONE INCH ON ORIGINAL DRAWING.
0 1"

DATE	OCTOBER 2024
PROJ	D3698100
DWG	05-C-105
SHEET	19 of 145

BID DOCUMENTS

FILENAME:05-C-105_D3698100.dgn PLOT DATE: 10/22/2024 PLOT TIME: 12:53:17 PM

©JACOBS 2024. ALL RIGHTS RESERVED.

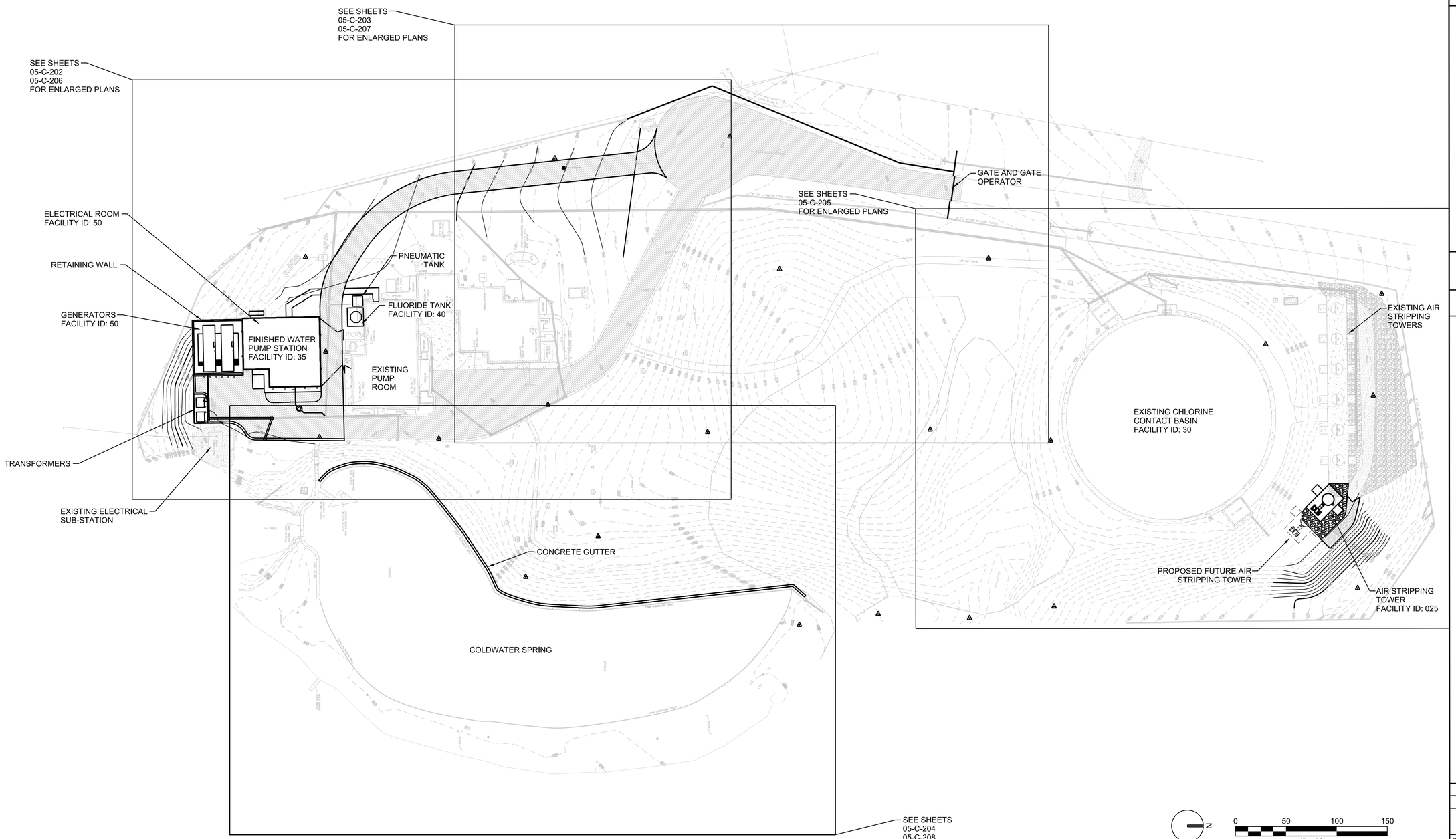

ALABAMA LICENSED No. PE51302 PROFESSIONAL ENGINEER LAUREN ELIZABETH MAYES

NO.	DATE	REVISION	BY	APVD

DSGN L MAYES | DR L MAYES | CHK J RAMOS | APVD L MAYES

PAUL B. KREBS WATER TREATMENT PLANT
IMPROVEMENTS
ANNISTON WATER WORKS & SEWER BOARD
CITY OF ANNISTON, ALABAMA

Jacobs

CIVIL
OVERALL SITE PLAN

REUSE OF DOCUMENTS: THIS DOCUMENT, AND THE IDEAS AND DESIGNS INCORPORATED HEREIN, AS AN INSTRUMENT OF PROFESSIONAL SERVICE, IS THE PROPERTY OF JACOBS AND IS NOT TO BE USED, IN WHOLE OR IN PART, FOR ANY OTHER PROJECT WITHOUT THE WRITTEN AUTHORIZATION OF JACOBS.

VERIFY SCALE
BAR IS ONE INCH ON ORIGINAL DRAWING.
0 1"

DATE	OCTOBER 2024
PROJ	D3698100
DWG	05-C-201
SHEET	20 of 145

BID DOCUMENTS

©JACOBS 2024. ALL RIGHTS RESERVED.

POINT	NORTHING	EASTING	ELEV.	NOTES
1	1128792.63	627829.98	595.17	BACK OF GENERATOR PAD
2	1128840.62	627829.08	595.17	BACK OF GENERATOR PAD
3	1128793.64	627883.97	594.58	FRONT OF GENERATOR PAD
4	1128841.63	627883.07	594.58	FRONT OF GENERATOR PAD
5	1128850.66	627877.67	595.00	ASPHALT
6	1128850.85	627877.67	595.50	CONCRETE LANDING PAD
7	1128861.96	627882.44	595.42	EDGE OF RAMP
8	1128866.86	627877.35	595.50	SIDEWALK
9	1128850.76	627882.65	594.92	ASPHALT
10	1128850.94	627882.65	595.42	TOP OF RAMP
11	1128851.12	627896.65	594.92	BOTTOM OF RAMP
12	1128862.18	627896.44	594.92	BOTTOM OF RAMP
13	1128862.26	627896.44	595.42	SIDEWALK
14	1128862.26	627900.47	594.92	ASPHALT
15	1128862.33	627900.40	595.42	SIDEWALK
16	1128867.20	627895.35	595.00	SIDEWALK
17	1128918.47	627894.41	595.50	SIDEWALK
18	1128918.55	627894.41	595.00	ASPHALT
19	1128918.53	627899.39	595.42	SIDEWALK
20	128918.63	627899.39	594.92	ASPHALT
21	1128794.14	627884.163	594.58	EDGE OF PAVEMENT
22	1128792.48	627902.05	594.75	TOP OF WALL
23	1128792.98	627902.04	594.50	TRANSFORMER PAD
24	1128794.44	627900.02	594.35	EDGE OF PAVEMENT
25	1228800.72	627899.89	594.24	EDGE OF PAVEMENT
26	1128807.85	627906.76	594.13	EDGE OF PAVEMENT

GENERAL NOTES

1. CONTRACTOR TO ENCASE EXISTING SEWER LINE BELOW NEW ROADWAY. MINIMUM CONCRETE ENCASEMENT OF 6".
2. CONTRACTOR SHALL AVOID IMPACT TO EXISTING SEPTIC SEWER SYSTEM AND DRAINAGE FIELD. ALL SEPTIC SYSTEM REPAIRS MUCH BE COMPLETED BY A CONTRACTOR CERTIFIED TO WORK ON SEPTIC SYSTEM IN CALHOUN COUNTY AND FOLLOW LOCAL GOVERNING CODES FOR ALL WORK.

△ KEYNOTES

1. REMOVABLE BOLLARDS TO BE 6" DIAMETER x 36" TALL REMOVABLE STEEL BOLLARD POWDER COATED YELLOW MANUFACTURED BY POSTGUARD OR APPROVED EQUAL.

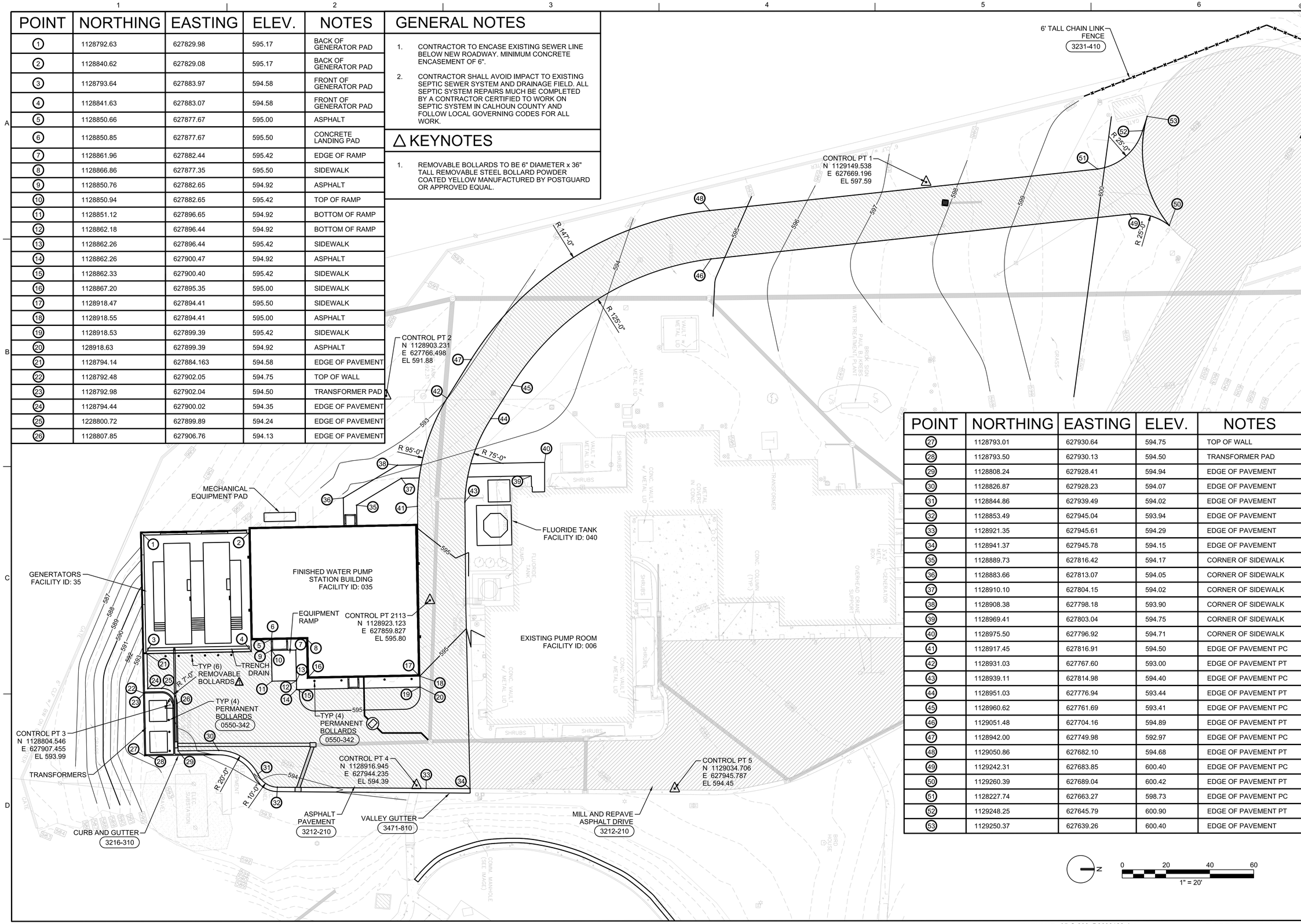

POINT	NORTHING	EASTING	ELEV.	NOTES
27	1128793.01	627930.64	594.75	TOP OF WALL
28	1128793.50	627930.13	594.50	TRANSFORMER PAD
29	1128808.24	627928.41	594.94	EDGE OF PAVEMENT
30	1128826.87	627928.23	594.07	EDGE OF PAVEMENT
31	1128844.86	627939.49	594.02	EDGE OF PAVEMENT
32	1128853.49	627945.04	593.94	EDGE OF PAVEMENT
33	1128921.35	627945.61	594.29	EDGE OF PAVEMENT
34	1128941.37	627945.78	594.15	EDGE OF PAVEMENT
35	1128889.73	627816.42	594.17	CORNER OF SIDEWALK
36	1128883.66	627813.07	594.05	CORNER OF SIDEWALK
37	1128910.10	627804.15	594.02	CORNER OF SIDEWALK
38	1128908.38	627798.18	593.90	CORNER OF SIDEWALK
39	1128969.41	627803.04	594.75	CORNER OF SIDEWALK
40	1128975.50	627796.92	594.71	CORNER OF SIDEWALK
41	1128917.45	627816.91	594.50	EDGE OF PAVEMENT PC
42	1128931.03	627767.60	593.00	EDGE OF PAVEMENT PT
43	1128939.11	627814.98	594.40	EDGE OF PAVEMENT PC
44	1128951.03	627776.94	593.44	EDGE OF PAVEMENT PT
45	1128960.62	627761.69	593.41	EDGE OF PAVEMENT PC
46	1129051.48	627704.16	594.89	EDGE OF PAVEMENT PT
47	1128942.00	627749.98	592.97	EDGE OF PAVEMENT PC
48	1129050.86	627682.10	594.68	EDGE OF PAVEMENT PT
49	1129242.31	627683.85	600.40	EDGE OF PAVEMENT PC
50	1129260.39	627689.04	600.42	EDGE OF PAVEMENT PT
51	1128227.74	627663.27	598.73	EDGE OF PAVEMENT PC
52	1129248.25	627645.79	600.90	EDGE OF PAVEMENT PT
53	1129250.37	627639.26	600.40	EDGE OF PAVEMENT

ALABAMA LICENSED No. PE51302 PROFESSIONAL ENGINEER LAUREN ELIZABETH MAYES

NO.	DATE	REVISION	BY	APVD

DSGN L MAYES | DR L MAYES | CHK J RAMOS | APVD L MAYES

PAUL B. KREBS WATER TREATMENT PLANT
IMPROVEMENTS
ANNISTON WATER WORKS & SEWER BOARD
CITY OF ANNISTON, ALABAMA

REUSE OF DOCUMENTS: THIS DOCUMENT, AND THE IDEAS AND DESIGNS INCORPORATED HEREIN, AS AN INSTRUMENT OF PROFESSIONAL SERVICE, IS THE PROPERTY OF JACOBS AND IS NOT TO BE USED, IN WHOLE OR IN PART, FOR ANY OTHER PROJECT WITHOUT THE WRITTEN AUTHORIZATION OF JACOBS.

Jacobs

CIVIL
SITE PLAN
SOUTH PLANT SITE

VERIFY SCALE
BAR IS ONE INCH ON ORIGINAL DRAWING.
0 1"

DATE	OCTOBER 2024
PROJ	D3698100
DWG	05-C-202
SHEET	21 of 145

BID DOCUMENTS

FILENAME: 05-C-202_D3698100.dgn PLOT DATE: 10/22/2024 PLOT TIME: 12:53:03 PM

©JACOBS 2024. ALL RIGHTS RESERVED.

GENERAL NOTES

1. MILL AND REPLACE TOP LAYER TO MATCH EXISTING TOP OF ASPHALT ELEVATIONS AS SHOWN BY CONTOURS ON DRAWING.

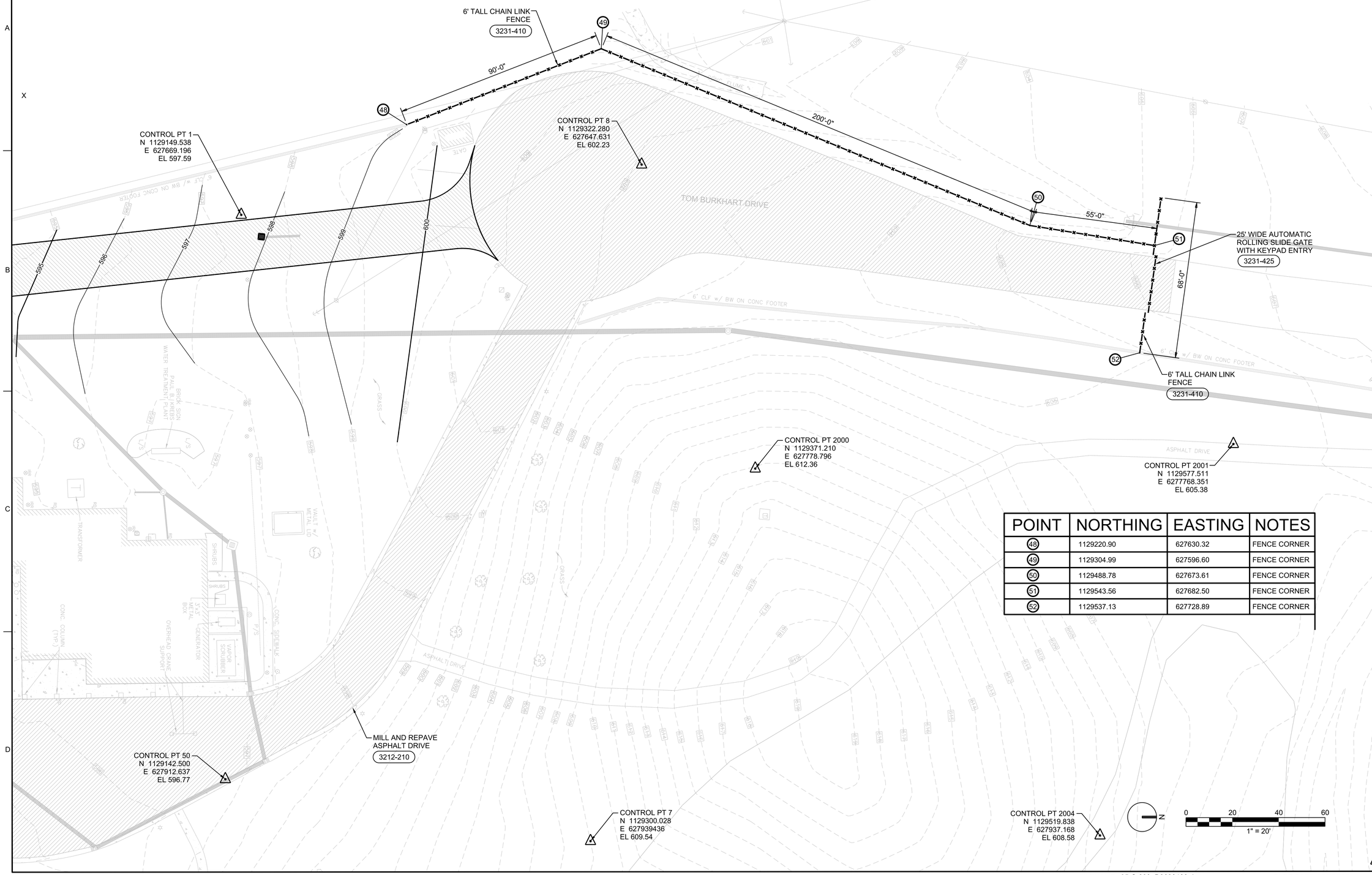

POINT	NORTHING	EASTING	NOTES
48	1129220.90	627630.32	FENCE CORNER
49	1129304.99	627596.60	FENCE CORNER
50	1129488.78	627673.61	FENCE CORNER
51	1129543.56	627682.50	FENCE CORNER
52	1129537.13	627728.89	FENCE CORNER

ALABAMA LICENSED No. PE51302 PROFESSIONAL ENGINEER LAUREN ELIZABETH MAYES

NO.	DATE	REVISION	BY	APVD

DSGN	L MAYES	DR L MAYES	CHK J RAMOS	APVD L MAYES

PAUL B. KREBS WATER TREATMENT PLANT
IMPROVEMENTS
ANNISTON WATER WORKS & SEWER BOARD
CITY OF ANNISTON, ALABAMA

REUSE OF DOCUMENTS: THIS DOCUMENT, AND THE IDEAS AND DESIGNS INCORPORATED HEREIN, AS AN INSTRUMENT OF PROFESSIONAL SERVICE IS THE PROPERTY OF JACOBS AND IS NOT TO BE USED, IN WHOLE OR IN PART, FOR ANY OTHER PROJECT WITHOUT THE WRITTEN AUTHORIZATION OF JACOBS.

Jacobs

CIVIL
SITE PLAN
NORTH PLANT SITE

VERIFY SCALE
BAR IS ONE INCH ON ORIGINAL DRAWING.
0 1"

DATE	OCTOBER 2024
PROJ	D3698100
DWG	05-C-203
SHEET	22 of 145

BID DOCUMENTS

FILENAME: 05-C-203_D3698100.dgn PLOT DATE: 10/22/2024 PLOT TIME: 12:53:29 PM

©JACOBS 2024. ALL RIGHTS RESERVED.

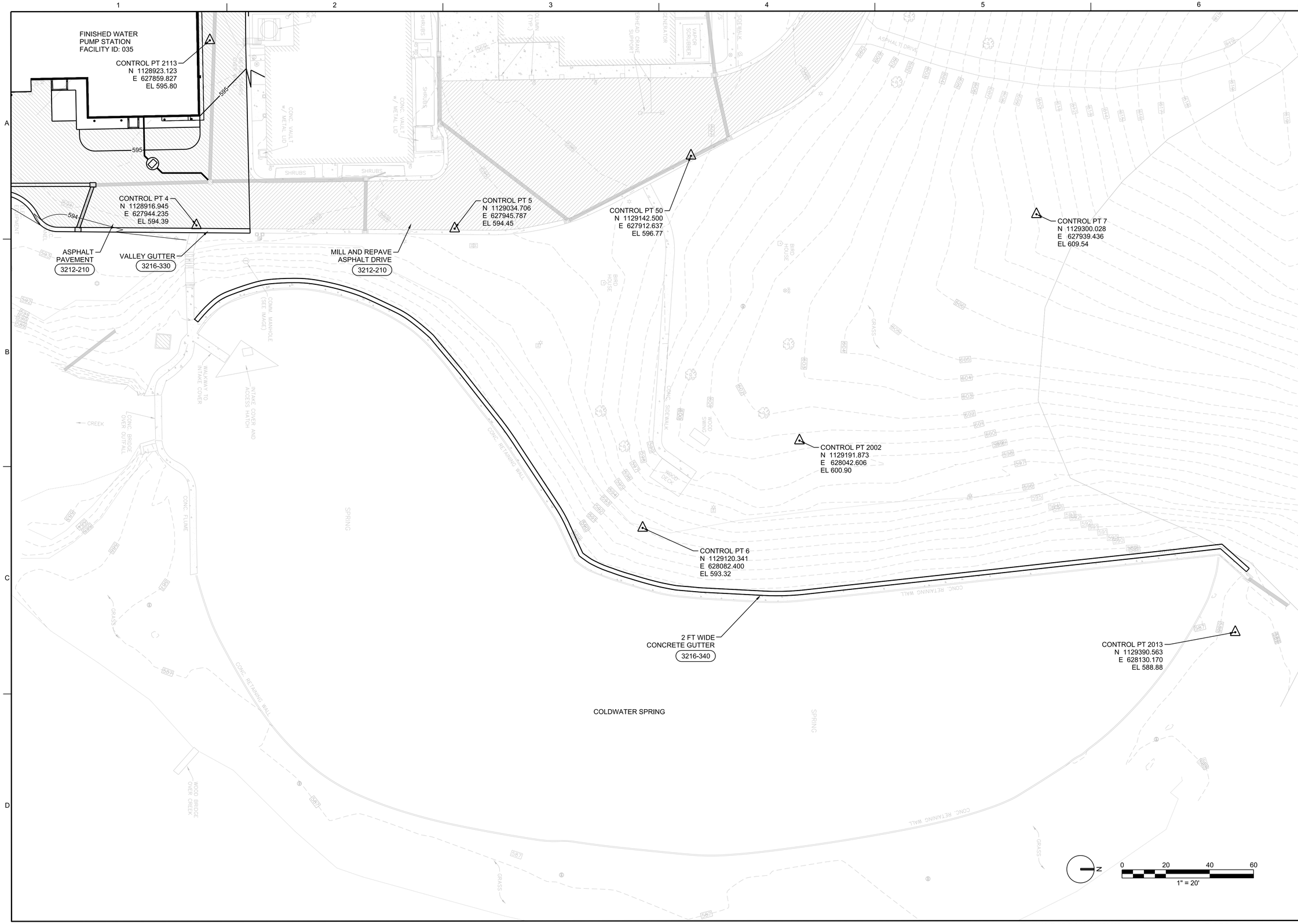

ALABAMA LICENSED No. PE51302 PROFESSIONAL ENGINEER LAUREN ELIZABETH MAYES

NO.	DATE	REVISION	BY	APVD

DSGN	DR	CHK	APVD
L MAYES	L MAYES	J RAMOS	L MAYES

PAUL B. KREBS WATER TREATMENT PLANT
IMPROVEMENTS
ANNISTON WATER WORKS & SEWER BOARD
CITY OF ANNISTON, ALABAMA

Jacobs

CIVIL
SITE PLAN
COLDWATER SPRING

REUSE OF DOCUMENTS: THIS DOCUMENT, AND THE IDEAS AND DESIGNS INCORPORATED HEREIN, AS AN INSTRUMENT OF PROFESSIONAL SERVICE, IS THE PROPERTY OF JACOBS AND IS NOT TO BE USED, IN WHOLE OR IN PART, FOR ANY OTHER PROJECT WITHOUT THE WRITTEN AUTHORIZATION OF JACOBS.

BID DOCUMENTS

VERIFY SCALE
BAR IS ONE INCH ON ORIGINAL DRAWING.
0 1"

DATE	OCTOBER 2024
PROJ	D3698100
DWG	05-C-204
SHEET	23 of 145

©JACOBS 2024. ALL RIGHTS RESERVED.

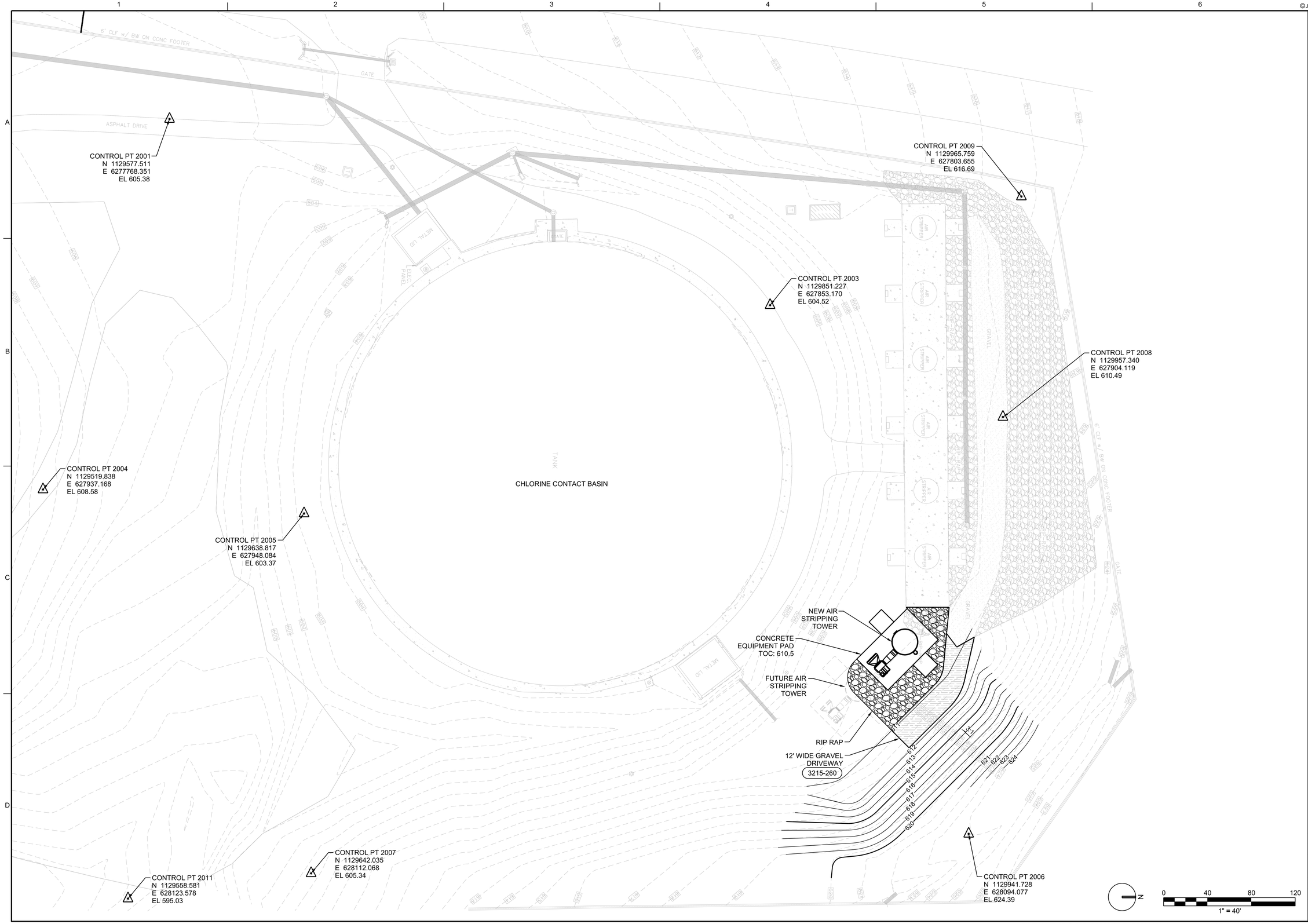

ALABAMA LICENSED No. PE51302 PROFESSIONAL ENGINEER LAUREN ELIZABETH MAYES

NO.	DATE	REVISION	BY	APVD

DSGN L MAYES | DR P STEFANIAK | CHK J RAMOS | APVD L MAYES

PAUL B. KREBS WATER TREATMENT PLANT
IMPROVEMENTS
ANNISTON WATER WORKS & SEWER BOARD
CITY OF ANNISTON, ALABAMA

Jacobs

CIVIL
AIR STRIPPING TOWERS
SITE PLAN

REUSE OF DOCUMENTS: THIS DOCUMENT, AND THE IDEAS AND DESIGNS INCORPORATED HEREIN, AS AN INSTRUMENT OF PROFESSIONAL SERVICE, IS THE PROPERTY OF JACOBS AND IS NOT TO BE USED, IN WHOLE OR IN PART, FOR ANY OTHER PROJECT WITHOUT THE WRITTEN AUTHORIZATION OF JACOBS.

VERIFY SCALE
BAR IS ONE INCH ON ORIGINAL DRAWING.
0 1"

DATE	OCTOBER 2024
PROJ	D3698100
DWG	05-C-205
SHEET	24 of 145

BID DOCUMENTS

©JACOBS 2024. ALL RIGHTS RESERVED.

GENERAL NOTES

1. CONTRACTOR TO ENCASE EXISTING SEWER LINE BELOW NEW ROADWAY. MINIMUM CONCRETE ENCASEMENT OF 6".

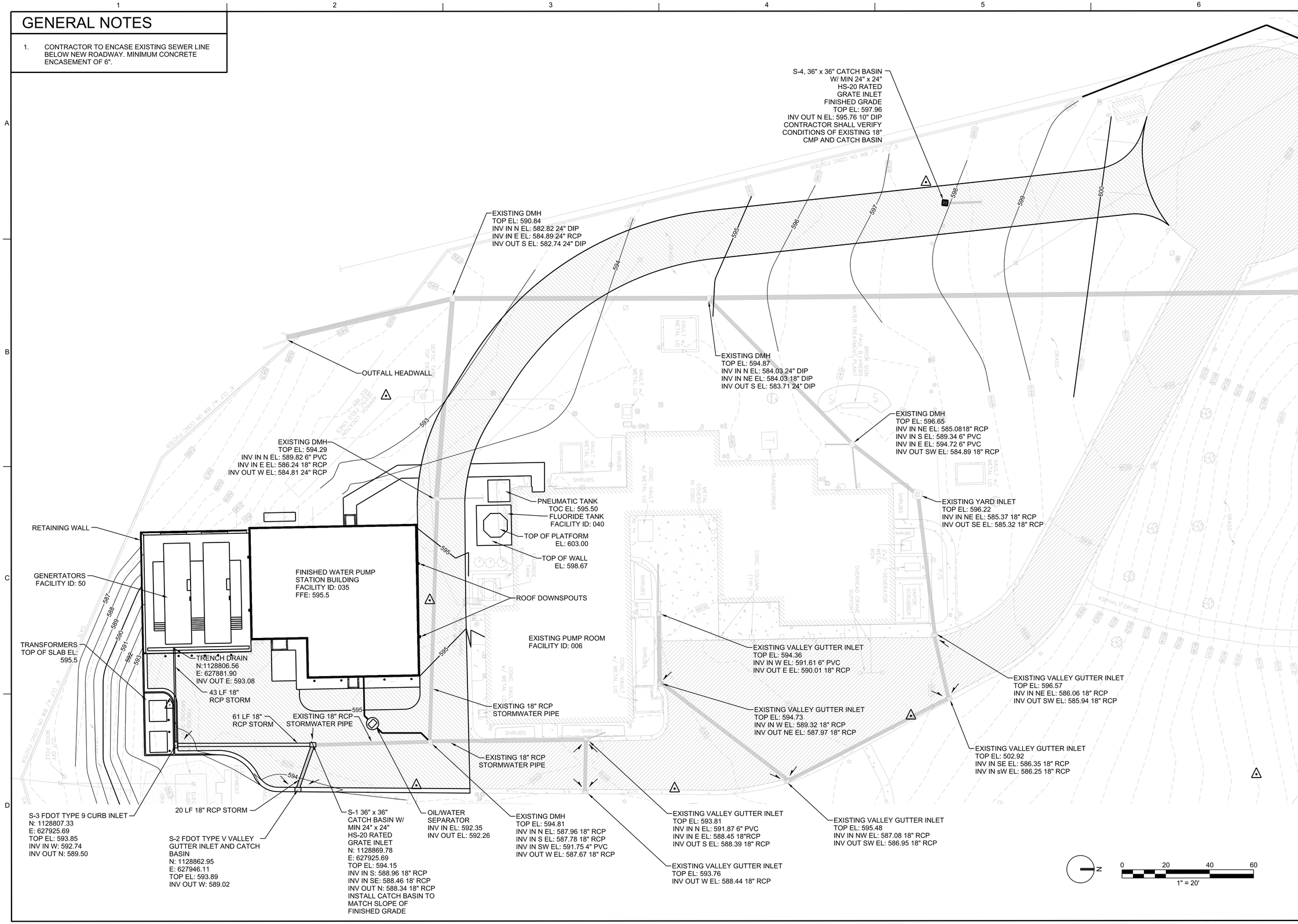

ALABAMA LICENSED No. PE51302 PROFESSIONAL ENGINEER ALLISON ELIZABETH MAYES

NO.	DATE	REVISION	BY	APVD

DSGN L MAYES | DR L MAYES | CHK J RAMOS | APVD L MAYES

PAUL B. KREBS WATER TREATMENT PLANT
IMPROVEMENTS
ANNISTON WATER WORKS & SEWER BOARD
CITY OF ANNISTON, ALABAMA

Jacobs

CIVIL
GRADING AND DRAINAGE PLAN
SOUTH PLANT SITE

REUSE OF DOCUMENTS: THIS DOCUMENT, AND THE IDEAS AND DESIGNS INCORPORATED HEREIN, AS AN INSTRUMENT OF PROFESSIONAL SERVICE, IS THE PROPERTY OF JACOBS AND IS NOT TO BE USED, IN WHOLE OR IN PART, FOR ANY OTHER PROJECT WITHOUT THE WRITTEN AUTHORIZATION OF JACOBS.

VERIFY SCALE
BAR IS ONE INCH ON ORIGINAL DRAWING.
0 1"

DATE	OCTOBER 2024
PROJ	D3698100
DWG	05-C-206
SHEET	25 of 145

BID DOCUMENTS

©JACOBS 2024. ALL RIGHTS RESERVED.

GENERAL NOTES

1. MILL AND REPLACE TOP LAYER TO MATCH EXISTING TOP OF ASPHALT ELEVATIONS AS SHOWN BY CONTOURS ON DRAWING.

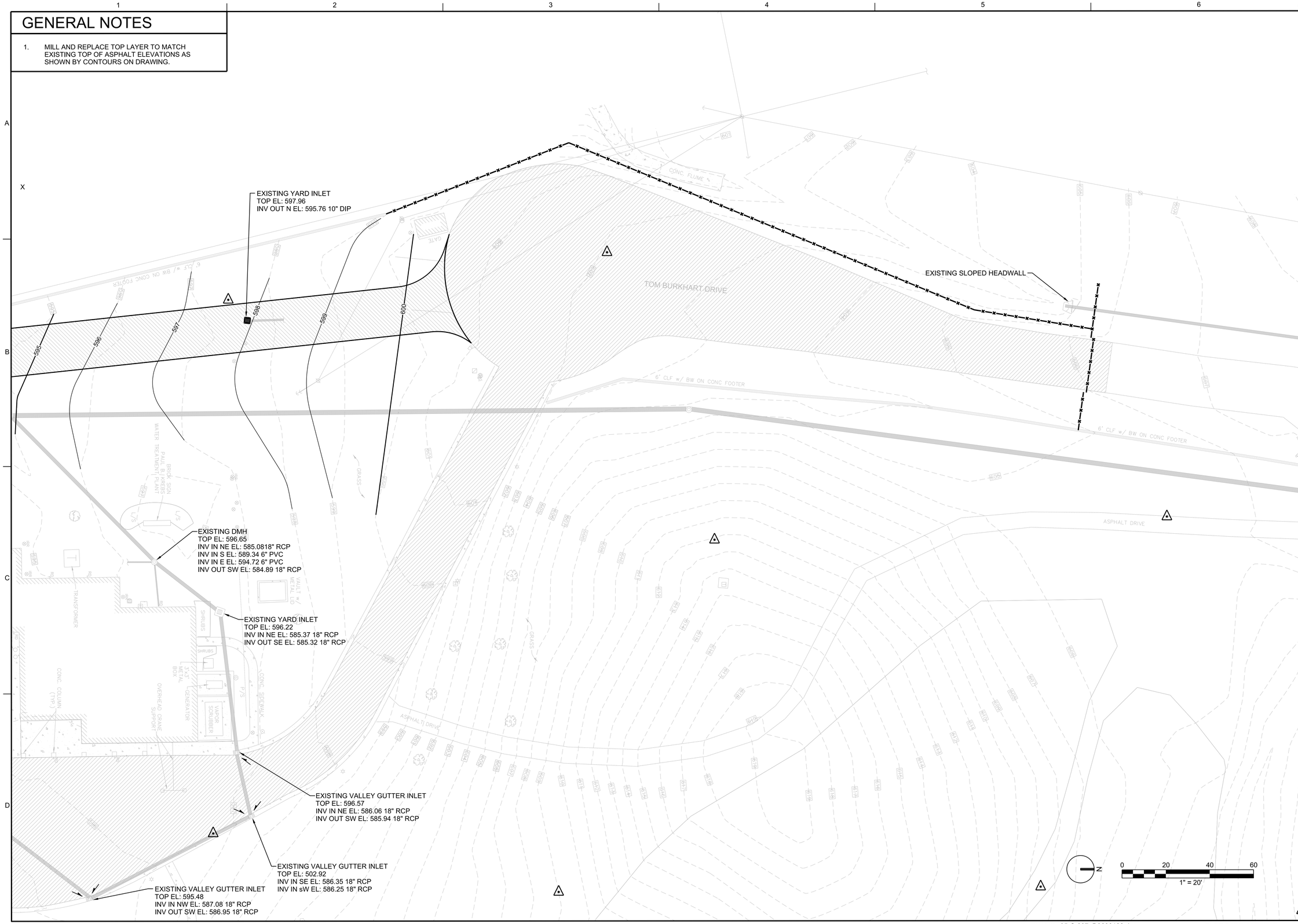

ALABAMA LICENSED No. PE51302 PROFESSIONAL ENGINEER LAUREN ELIZABETH MAYES

NO.	DATE	REVISION	BY	APVD

DSGN	L MAYES	DR	L MAYES
CHK	J RAMOS	APVD	L MAYES

PAUL B. KREBS WATER TREATMENT PLANT
IMPROVEMENTS
ANNISTON WATER WORKS & SEWER BOARD
CITY OF ANNISTON, ALABAMA

Jacobs

CIVIL
GRADING AND DRAINAGE PLAN
NORTH PLANT SITE

REUSE OF DOCUMENTS: THIS DOCUMENT, AND THE IDEAS AND DESIGNS INCORPORATED HEREIN, AS AN INSTRUMENT OF PROFESSIONAL SERVICE, IS THE PROPERTY OF JACOBS AND IS NOT TO BE USED, IN WHOLE OR IN PART, FOR ANY OTHER PROJECT WITHOUT THE WRITTEN AUTHORIZATION OF JACOBS.

VERIFY SCALE
BAR IS ONE INCH ON ORIGINAL DRAWING.
0 1"

DATE	OCTOBER 2024
PROJ	D3698100
DWG	05-C-207
SHEET	26 of 145

BID DOCUMENTS

FILENAME: 05-C-207_D3698100.dgn PLOT DATE: 10/22/2024 PLOT TIME: 12:53:30 PM

©JACOBS 2024. ALL RIGHTS RESERVED.

FINISHED WATER PUMP STATION FACILITY ID: 035

EXISTING PUMP ROOM FACILITY ID: 06

EXISTING VALLEY GUTTER INLET
TOP EL: 594.36
INV IN W EL: 591.61 6" PVC
INV OUT E EL: 590.01 18" RCP

EXISTING VALLEY GUTTER INLET
TOP EL: 596.57
INV IN NE EL: 586.06 18" RCP
INV OUT SW EL: 585.94 18" RCP

EXISTING VALLEY GUTTER INLET
TOP EL: 594.73
INV IN W EL: 589.32 18" RCP
INV OUT NE EL: 587.97 18" RCP

EXISTING VALLEY GUTTER INLET
TOP EL: 502.92
INV IN SE EL: 586.35 18" RCP
INV IN sW EL: 586.25 18" RCP

EXISTING 18" RCP STORMWATER PIPE

EXISTING 18" RCP STORMWATER PIPE

EXISTING 18" RCP STORMWATER PIPE

EXISTING 18" RCP STORMWATER PIPE

OIL/WATER SEPARATOR
INV IN EL: 592.35
INV OUT EL: 592.26

EXISTING DMH
TOP EL: 594.81
INV IN N EL: 587.96 18" RCP
INV IN S EL: 587.78 18" RCP
INV OUT W EL: 587.67 18" RCP

EXISTING VALLEY GUTTER INLET
TOP EL: 594.81
INV IN N EL: 591.87 6" PVC
INV IN E EL: 588.45 18"RCP
INV OUT S EL: 588.39 18" RCP

EXISTING VALLEY GUTTER INLET
TOP EL: 595.48
INV IN NW EL: 587.08 18" RCP
INV OUT SW EL: 586.95 18" RCP

EXISTING VALLEY GUTTER INLET
TOP EL: 593.76
INV OUT W EL: 588.44 18" RCP

2 FT WIDE CONCRETE GUTTER
3216-340

COLDWATER SPRING

N

0 20 40 60
1" = 20'

ALABAMA LICENSED No. PE51302 PROFESSIONAL ENGINEER LAUREN ELIZABETH MAYES

NO.	DATE	REVISION	BY	APVD

DSGN L MAYES | DR L MAYES | CHK J RAMOS | APVD L MAYES

PAUL B. KREBS WATER TREATMENT PLANT
IMPROVEMENTS
ANNISTON WATER WORKS & SEWER BOARD
CITY OF ANNISTON, ALABAMA

Jacobs

CIVIL
GRADING AND DRAINAGE PLAN
COLDWATER SPRING

REUSE OF DOCUMENTS: THIS DOCUMENT, AND THE IDEAS AND DESIGNS INCORPORATED HEREIN, AS AN INSTRUMENT OF PROFESSIONAL SERVICE, IS THE PROPERTY OF JACOBS AND IS NOT TO BE USED, IN WHOLE OR IN PART, FOR ANY OTHER PROJECT WITHOUT THE WRITTEN AUTHORIZATION OF JACOBS.

VERIFY SCALE
BAR IS ONE INCH ON ORIGINAL DRAWING.
0 1"

DATE	OCTOBER 2024
PROJ	D3698100
DWG	05-C-208
SHEET	27 of 145

BID DOCUMENTS

FILENAME:05-C-208_D3698100.dgn PLOT DATE: 10/22/2024 PLOT TIME: 12:52:23 PM

©JACOBS 2024. ALL RIGHTS RESERVED.

GENERAL NOTES

1. FOLLOWING THE COMPLETION OF THE FINISHED WATER PUMP STATION, GENERATORS, AND FINAL GRADING AROUND THESE STRUCTURES, THE CONTRACTOR SHALL HIRE A SURVEYOR LICENSED IN THE STATE OF ALABAMA TO PROVIDE ALL ELEVATIONS AND LOCATION DATA REQUIRED TO COMPLETE FEMA FORM FF-206-FY-22-152. THE DATA SHALL BE SUBMITTED TO ENGINEER INCLUDING A SURVEY STAMPED BY THE PROFESSIONAL LAND SURVEYOR, ALL BACK-UP DATA, FIELD NOTES, AND ELECTRONIC DATA FILES SUPPORTING THE SURVEY.

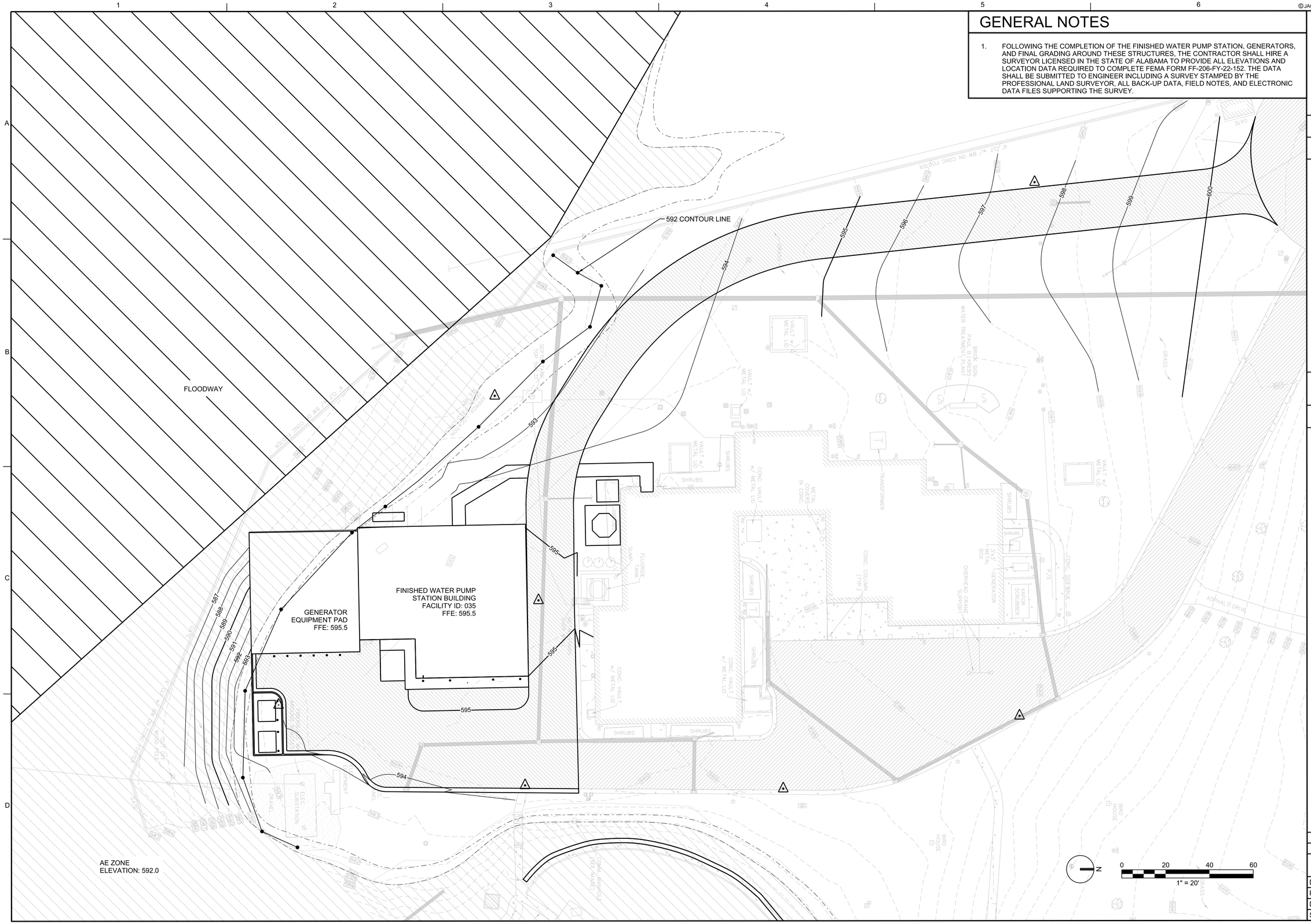

ALABAMA LICENSED No. PE51302 PROFESSIONAL ENGINEER ALLISON ELIZABETH MAYES

NO.	DATE	REVISION	BY	APVD

DSGN L MAYES | DR L MAYES | CHK J RAMOS | APVD L MAYES

PAUL B. KREBS WATER TREATMENT PLANT
IMPROVEMENTS
ANNISTON WATER WORKS & SEWER BOARD
CITY OF ANNISTON, ALABAMA

Jacobs

CIVIL
ENLARGED SITE PLAN
AND FLOODWAY DELINEATION

REUSE OF DOCUMENTS: THIS DOCUMENT, AND THE IDEAS AND DESIGNS INCORPORATED HEREIN, AS AN INSTRUMENT OF PROFESSIONAL SERVICE, IS THE PROPERTY OF JACOBS AND IS NOT TO BE USED, IN WHOLE OR IN PART, FOR ANY OTHER PROJECT WITHOUT THE WRITTEN AUTHORIZATION OF JACOBS.

VERIFY SCALE
BAR IS ONE INCH ON ORIGINAL DRAWING.
0 1"

DATE	OCTOBER 2024
PROJ	D3698100
DWG	05-C-209
SHEET	28 of 145

BID DOCUMENTS

FILENAME:05-C-209_D3698100.dgn PLOT DATE: 10/22/2024 PLOT TIME: 12:53:28 PM

©JACOBS 2024. ALL RIGHTS RESERVED.

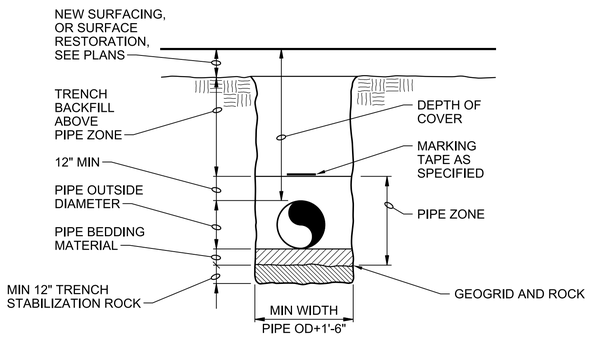

TYPICAL TRENCH

NTS

3123-110

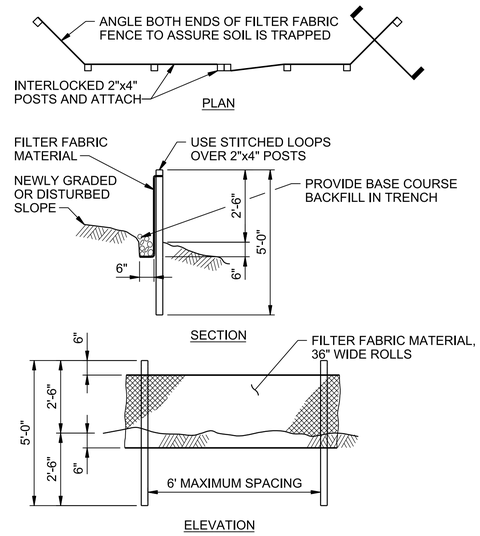

NOTES:

1. BURY BOTTOM OF FILTER FABRIC 6" VERTICALLY BELOW FINISHED GRADE.
2. 2"x4" DOUGLAS FIR OR STEEL FENCE POSTS.
3. STITCHED LOOPS TO BE INSTALLED DOWNHILL SIDE OF SLOPE.
4. COMPACT ALL AREAS OF FILTER FABRIC TRENCH.

SILT FENCE

NTS

3125-165

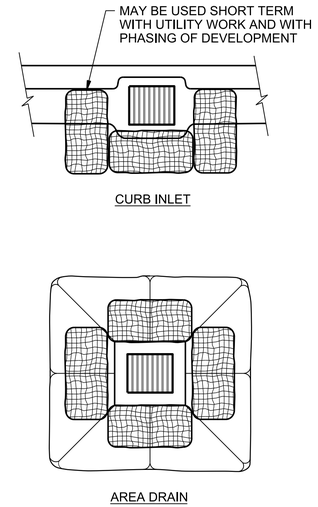

WATTLE INLET PROTECTION

NTS

3125-186

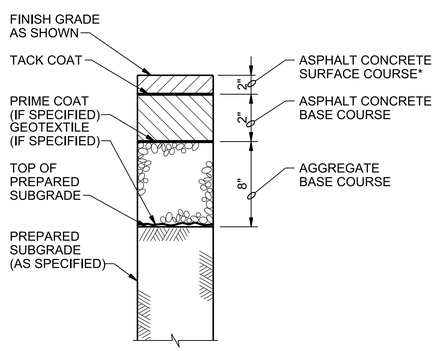

NOTE:

*FOR PAVEMENT RESTORATION, MILL 1.5" DEPTH, APPLY TACK COAT, AND PLACE 1.5" THICK ASPHALT WEARING SURFACE COURSE.

ASPHALT CONCRETE PAVEMENT

NTS

3212-210

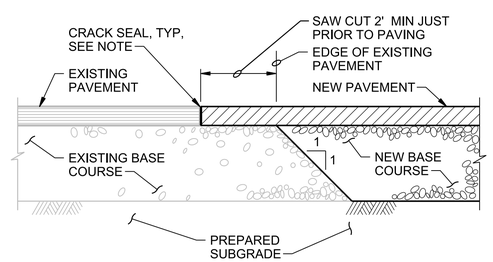

NOTE:

PAINT EDGE OF EXISTING ASPHALT WITH TACK COAT PRIOR TO PAVING. CRACK SEAL JOINT AFTER PAVING OPERATION HAS BEEN COMPLETED.

PAVEMENT CONNECTION

NTS

3212-215

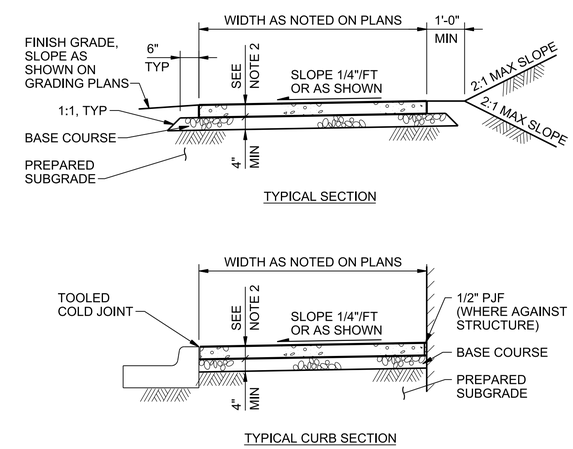

NOTES:

1. SIDEWALKS 8 FEET AND WIDER SHALL HAVE A LONGITUDINAL CONTRACTION JOINT AT THE MIDPOINT. CONTRACTION JOINT SPACING SHALL NOT EXCEED 8 FEET IN WIDTH.
2. CONCRETE DEPTH FOR STANDARD SIDEWALKS SHALL BE NOMINAL 4" MINIMUM, THICKNESS IN DRIVEWAY SHALL BE 6" MINIMUM.

TYPICAL CONCRETE SIDEWALK

NTS

3213-220

ALABAMA LICENSED No. PE51302 PROFESSIONAL ENGINEER KAMREN ELIZABETH MAYES

NO.	DATE	REVISION	BY	APVD
DSGN	L MAYES	DR L MAYES	CHK J RAMOS	APVD L MAYES

PAUL B. KREBS WATER TREATMENT PLANT IMPROVEMENTS
ANNISTON WATER WORKS & SEWER BOARD
CITY OF ANNISTON, ALABAMA

Jacobs

CIVIL
STANDARD DETAILS

REUSE OF DOCUMENTS: THIS DOCUMENT, AND THE IDEAS AND DESIGNS INCORPORATED HEREIN, AS AN INSTRUMENT OF PROFESSIONAL SERVICE, IS THE PROPERTY OF JACOBS AND IS NOT TO BE USED, IN WHOLE OR IN PART, FOR ANY OTHER PROJECT WITHOUT THE WRITTEN AUTHORIZATION OF JACOBS.

VERIFY SCALE
BAR IS ONE INCH ON ORIGINAL DRAWING.
0 1"

DATE	OCTOBER 2024
PROJ	D3698100
DWG	99-C-501
SHEET	29 of 145

BID DOCUMENTS

©JACOBS 2024. ALL RIGHTS RESERVED.

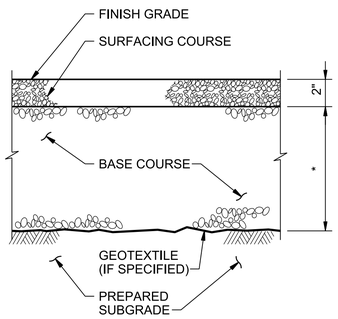

GRAVEL SURFACING
NTS

3215-260

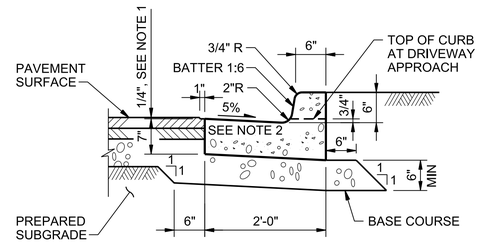

NOTE:

1. 1/4" PAVEMENT LIP ON LOW SIDE GUTTERS ONLY.
2. WHEN USED ON THE HIGH SIDE OF ROADWAYS, THE CROSS SLOPE OF THE GUTTER SHALL MATCH THE SLOPE OF THE ADJACENT PAVEMENT, UNLESS OTHERWISE DETAILED ON THE PLANS.

CONCRETE CURB AND GUTTER
NTS

3216-310

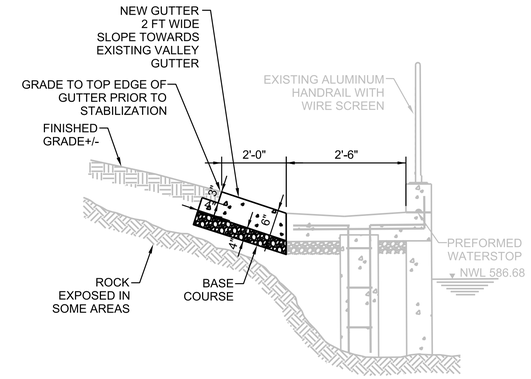

BARRIER WALL DETAIL
NTS

3216-340

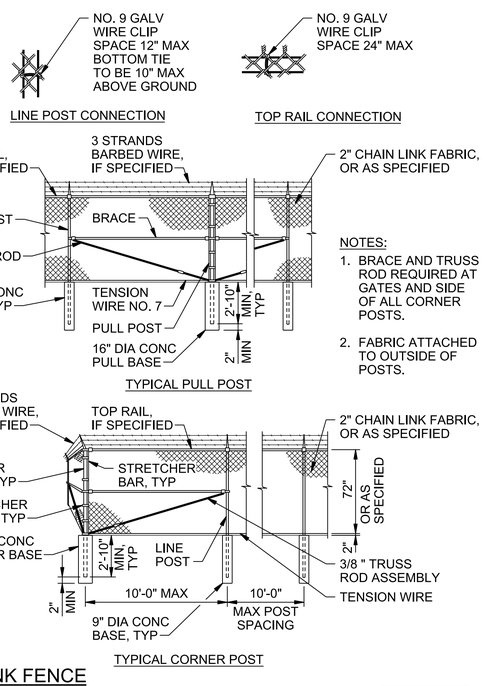

NOTES:

1. BRACE AND TRUSS ROD REQUIRED AT GATES AND SIDE OF ALL CORNER POSTS.
2. FABRIC ATTACHED TO OUTSIDE OF POSTS.

CHAIN LINK FENCE
NTS

3231-410

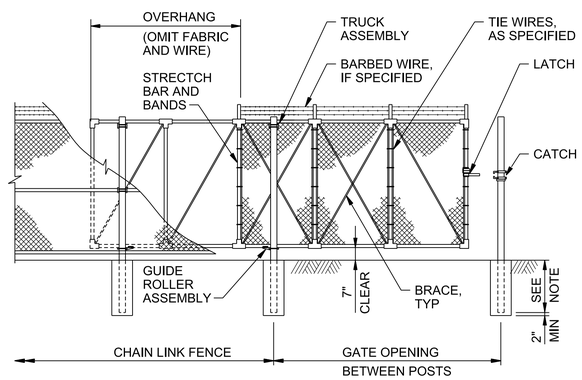

NOTE:

POST SETS PER MANUFACTURER'S RECOMMENDATIONS FOR GATE OPENING AND GATE POST SIZES.

CANTILEVER SLIDE GATE
NTS

3231-425

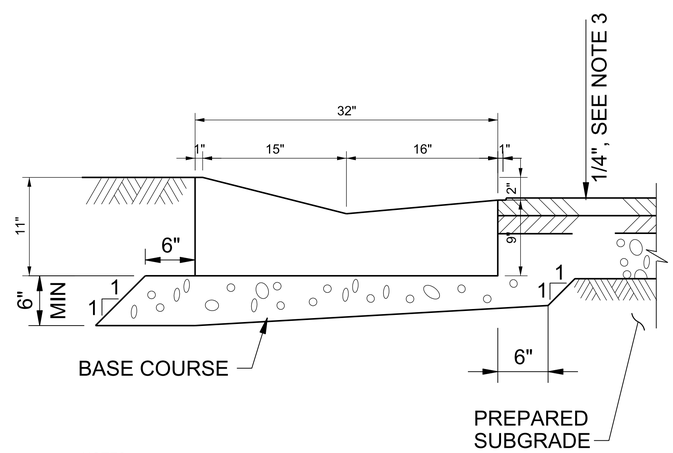

NOTES:

1. CONCRETE GUTTER IS TYPE M-12, ALDOT INDEX 730.
2. PLACE PREMOLDED FILLER AGAINST VERTICAL FACE WHERE GUTTER ABUTS CONCRETE.
3. 1/4" PAVEMENT LIP ON LOW SIDE GUTTERS ONLY.

CONCRETE GUTTER
NTS

3471-810

NO.	DATE	REVISION	BY	APVD

DSGN L MAYES | DR L MAYES | CHK J RAMOS | APVD L MAYES

PAUL B. KREBS WATER TREATMENT PLANT
IMPROVEMENTS
ANNISTON WATER WORKS & SEWER BOARD
CITY OF ANNISTON, ALABAMA

REUSE OF DOCUMENTS: THIS DOCUMENT, AND THE IDEAS AND DESIGNS INCORPORATED HEREIN, AS AN INSTRUMENT OF PROFESSIONAL SERVICE, IS THE PROPERTY OF JACOBS AND IS NOT TO BE USED, IN WHOLE OR IN PART, FOR ANY OTHER PROJECT WITHOUT THE WRITTEN AUTHORIZATION OF JACOBS.

Jacobs

CIVIL
STANDARD DETAILS

VERIFY SCALE
BAR IS ONE INCH ON ORIGINAL DRAWING.
0 1"

DATE	OCTOBER 2024
PROJ	D3698100
DWG	99-C-502
SHEET	30 of 145

BID DOCUMENTS

©JACOBS 2024. ALL RIGHTS RESERVED.

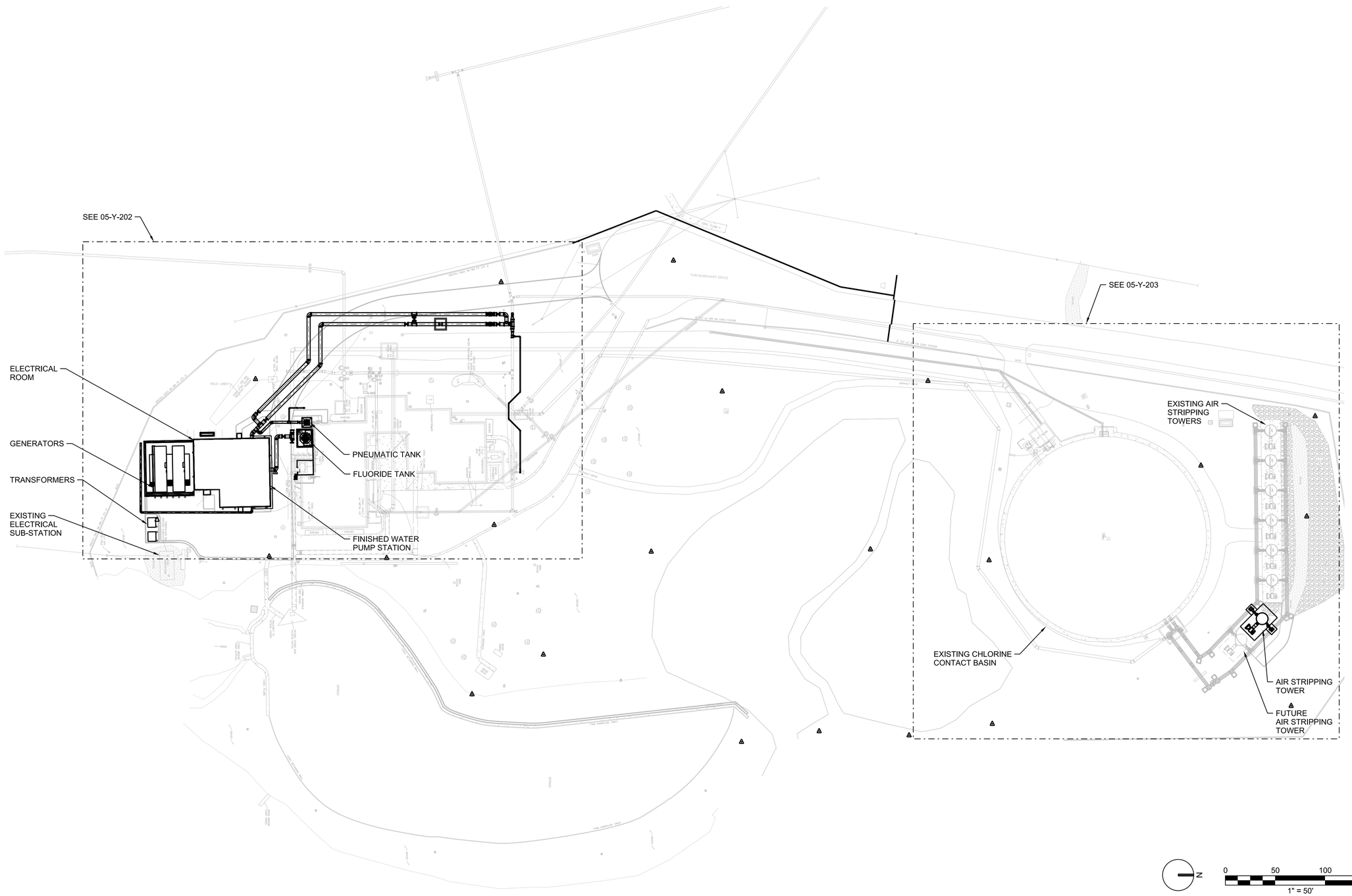

GENERAL SHEET NOTES

1. CONTRACTOR SHALL CONFIRM IE OF EXISTING PIPES AND PIPE CONNECTION.
2. ALL PIPE AND FITTINGS SHALL BE DI, MJ, RJ.

ALABAMA LICENSED No. PE51302 PROFESSIONAL ENGINEER KAMERON ELIZABETH MYERS

Digitally signed by Kameron E. Myers Date: 2024.10.22 09:42:00 -05'00'

NO.	DATE	REVISION	BY	APVD

DSGN	M LAKEMAN	DR	P HAMERLIK
CHK	M STICKLEY	APVD	M LAKEMAN

PAUL B. KREBS WATER TREATMENT PLANT
IMPROVEMENTS
ANNISTON WATER WORKS & SEWER BOARD
CITY OF ANNISTON, ALABAMA

REUSE OF DOCUMENTS: THIS DOCUMENT, AND THE IDEAS AND DESIGNS INCORPORATED HEREIN, AS AN INSTRUMENT OF PROFESSIONAL SERVICE, IS THE PROPERTY OF JACOBS AND IS NOT TO BE USED, IN WHOLE OR IN PART, FOR ANY OTHER PROJECT WITHOUT THE WRITTEN AUTHORIZATION OF JACOBS.

Jacobs

YARD PIPING
PLAN

VERIFY SCALE
BAR IS ONE INCH ON ORIGINAL DRAWING.
0 1"

DATE	OCTOBER 2024
PROJ	D3698100
DWG	05-Y-201
SHEET	31 of 145

BID DOCUMENTS

FILENAME: 05-Y-201_D3698100.dgn PLOT DATE: 10/22/2024 PLOT TIME: 12:55:05 PM

©JACOBS 2024. ALL RIGHTS RESERVED.

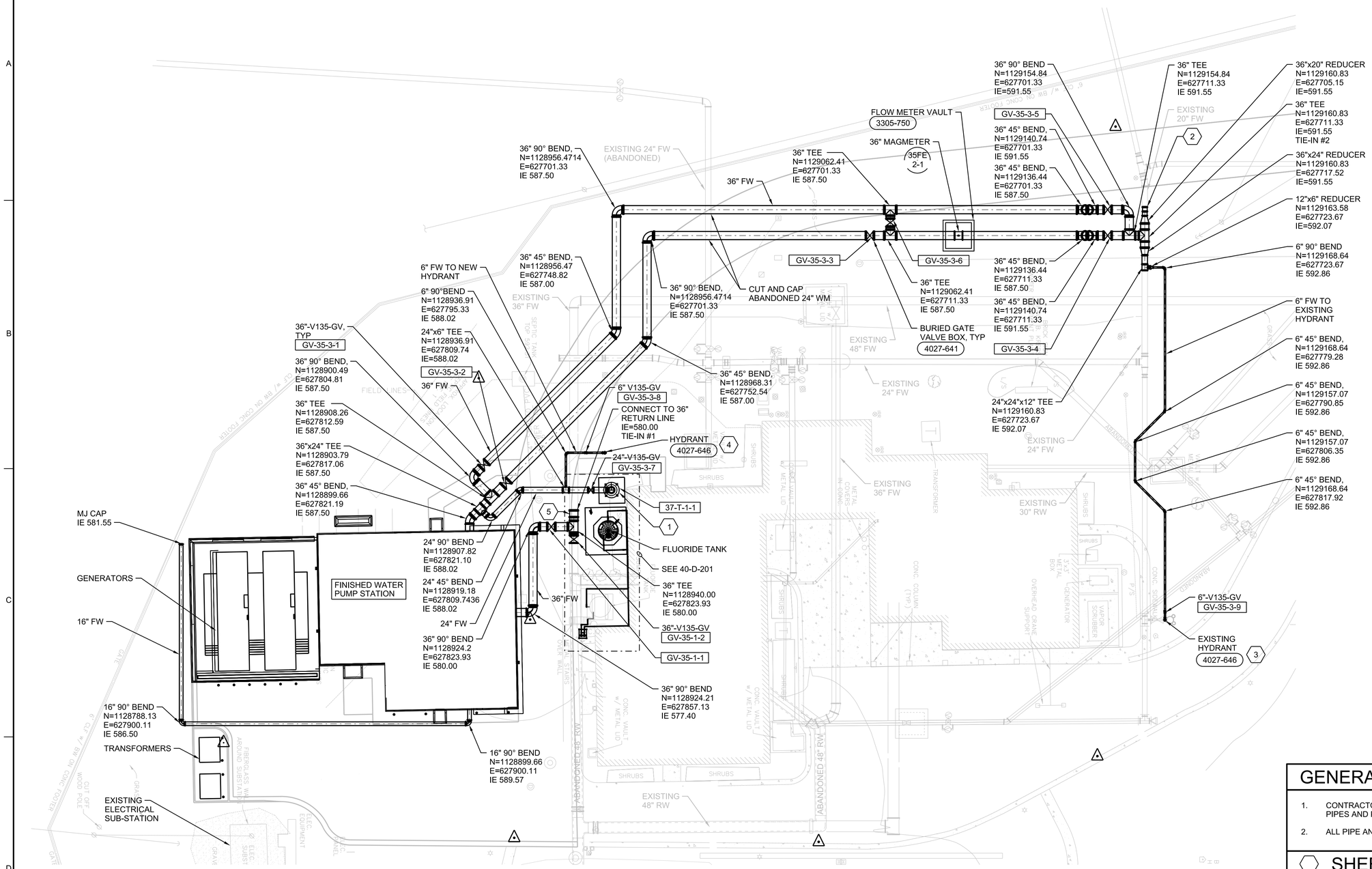

GENERAL SHEET NOTES

1. CONTRACTOR SHALL CONFIRM IE OF EXISTING PIPES AND PIPE CONNECTION.
2. ALL PIPE AND FITTINGS SHALL BE DI, MJ, RJ.

SHEET KEYNOTES

1. CONTRACTOR TO INSTALL 2500 GAL PNEUMATIC VERTICAL TANK, SEE SPECIFICATION 33 12 17.01 SURGE CONTROL SYSTEM.
2. CONTRACTOR TO INSTALL PIPE SLEEVE ON EXISTING 20" PIPE.
3. CONTRACTOR TO USE EXISTING HYDRANT.
4. NEW HYDRANT TO BE PROVIDE BY OWNER.
5. MJ SLEEVE.

ALABAMA LICENSED No. PE51302 PROFESSIONAL ENGINEER KAREN ELIZABETH MYERS

NO.	DATE	REVISION	BY	APVD

DSGN M LAKEMAN | DR P HAMERLIK | CHK M STICKLEY | APVD M LAKEMAN

PAUL B. KREBS WATER TREATMENT PLANT
IMPROVEMENTS
ANNISTON WATER WORKS & SEWER BOARD
CITY OF ANNISTON, ALABAMA

YARD PIPING
ENLARGED PLAN

REUSE OF DOCUMENTS: THIS DOCUMENT, AND THE IDEAS AND DESIGNS INCORPORATED HEREIN, AS AN INSTRUMENT OF PROFESSIONAL SERVICE, IS THE PROPERTY OF JACOBS AND IS NOT TO BE USED, IN WHOLE OR IN PART, FOR ANY OTHER PROJECT WITHOUT THE WRITTEN AUTHORIZATION OF JACOBS.

VERIFY SCALE
BAR IS ONE INCH ON ORIGINAL DRAWING.
0 1"

DATE	OCTOBER 2024
PROJ	D3698100
DWG	05-Y-202
SHEET	32 of 145

BID DOCUMENTS

©JACOBS 2024. ALL RIGHTS RESERVED.

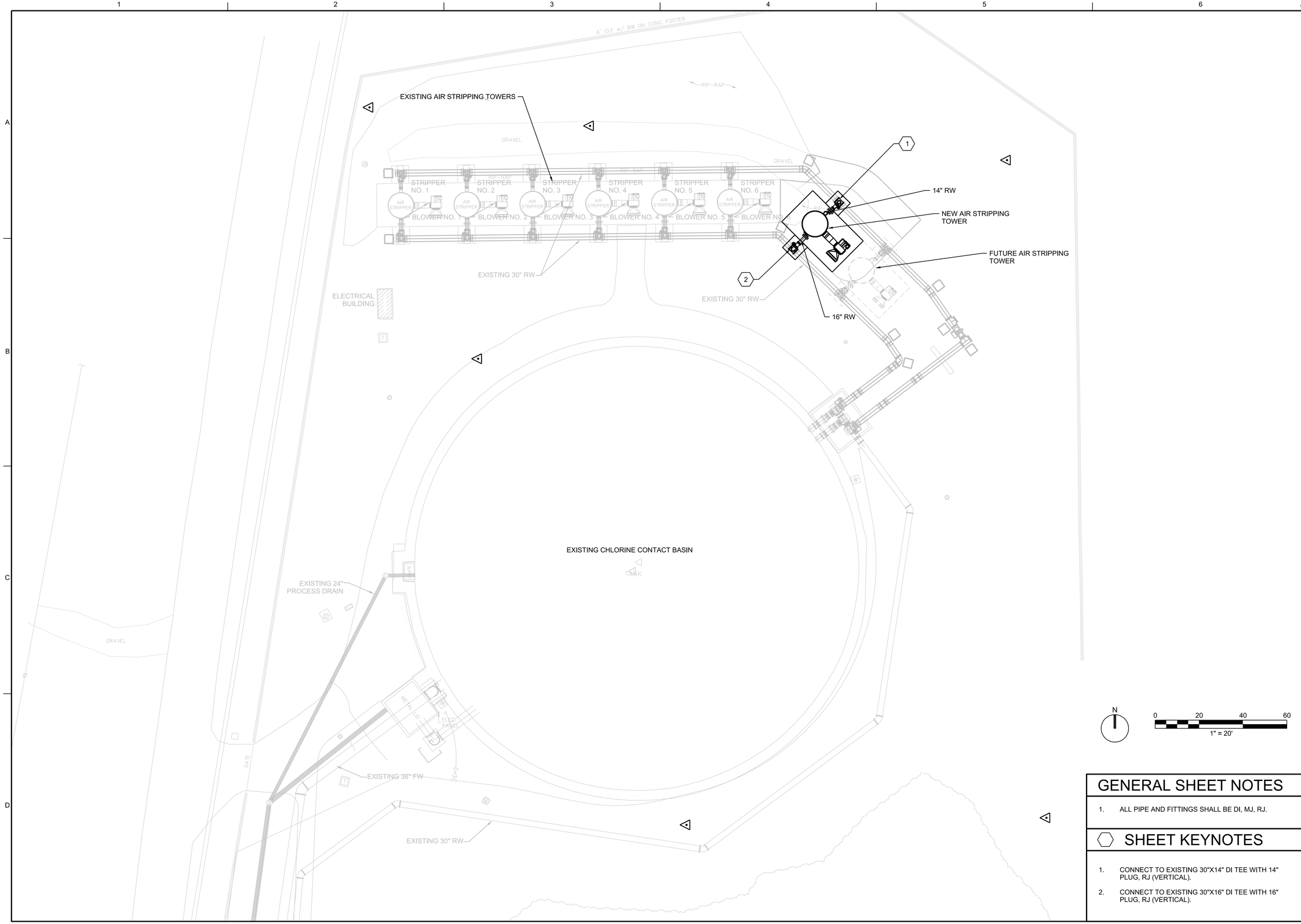

GENERAL SHEET NOTES

1. ALL PIPE AND FITTINGS SHALL BE DI, MJ, RJ.

SHEET KEYNOTES

1. CONNECT TO EXISTING 30"X14" DI TEE WITH 14" PLUG, RJ (VERTICAL).
2. CONNECT TO EXISTING 30"X16" DI TEE WITH 16" PLUG, RJ (VERTICAL).

ALABAMA LICENSED No. PE51302 PROFESSIONAL ENGINEER MARCH ELIZABETH MYERS

Digitally signed by March Myers Date: 2024.10.22 09:55:05 -05'00'

NO.	DATE	REVISION	BY	APVD

DSGN M LAKEMAN | DR P HAMERLIK | CHK M STICKLEY | APVD M LAKEMAN

PAUL B. KREBS WATER TREATMENT PLANT
IMPROVEMENTS
ANNISTON WATER WORKS & SEWER BOARD
CITY OF ANNISTON, ALABAMA

Jacobs

YARD PIPING
ENLARGED PLAN

REUSE OF DOCUMENTS: THIS DOCUMENT, AND THE IDEAS AND DESIGNS INCORPORATED HEREIN, AS AN INSTRUMENT OF PROFESSIONAL SERVICE, IS THE PROPERTY OF JACOBS AND IS NOT TO BE USED, IN WHOLE OR IN PART, FOR ANY OTHER PROJECT WITHOUT THE WRITTEN AUTHORIZATION OF JACOBS.

VERIFY SCALE
BAR IS ONE INCH ON ORIGINAL DRAWING.
0 1"

DATE	OCTOBER 2024
PROJ	D3698100
DWG	05-Y-203
SHEET	33 of 145

BID DOCUMENTS

©JACOBS 2024. ALL RIGHTS RESERVED.

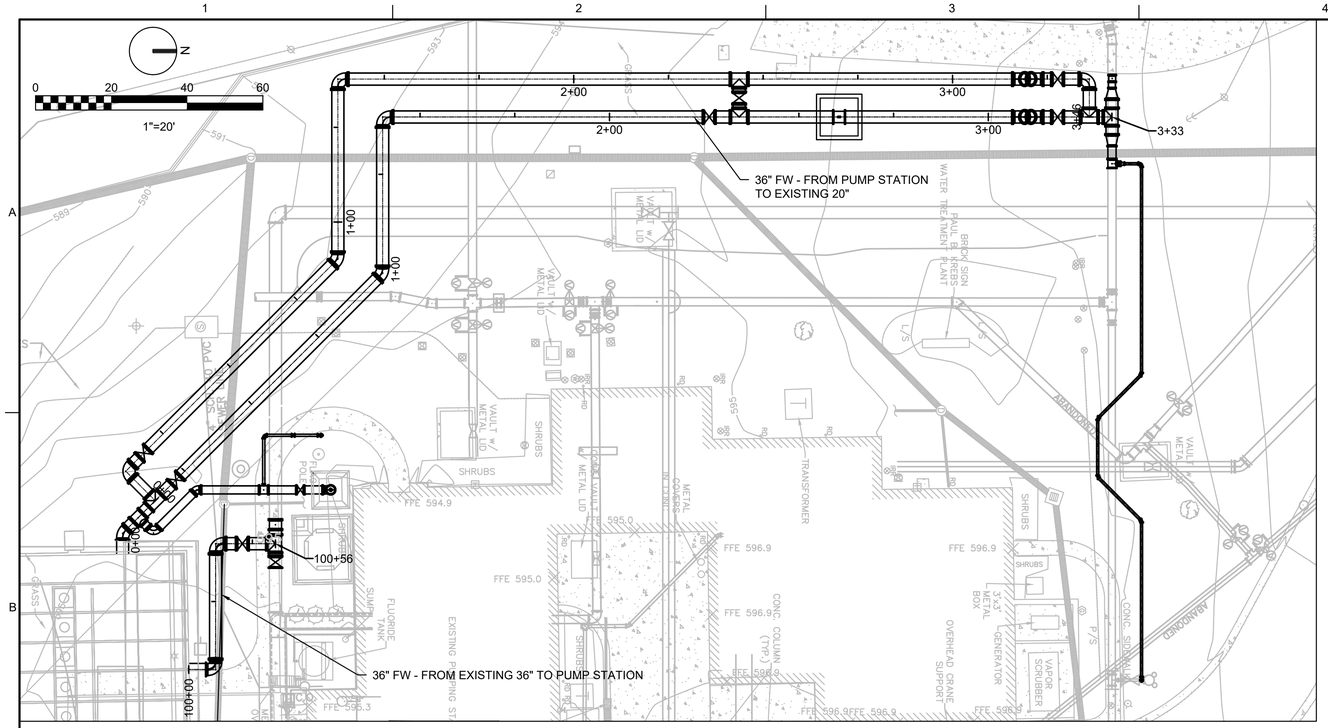

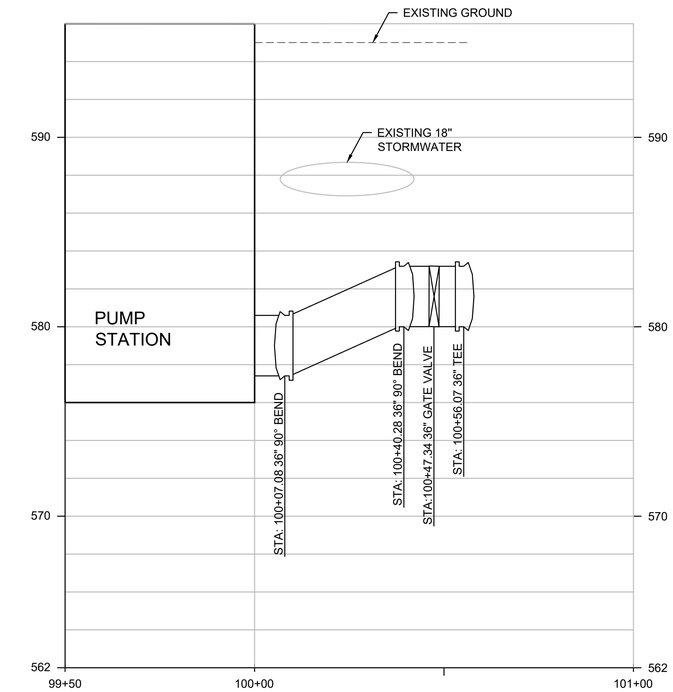

36" FW - FROM EXISTING 36" TO PUMP STATION

1" = 20'

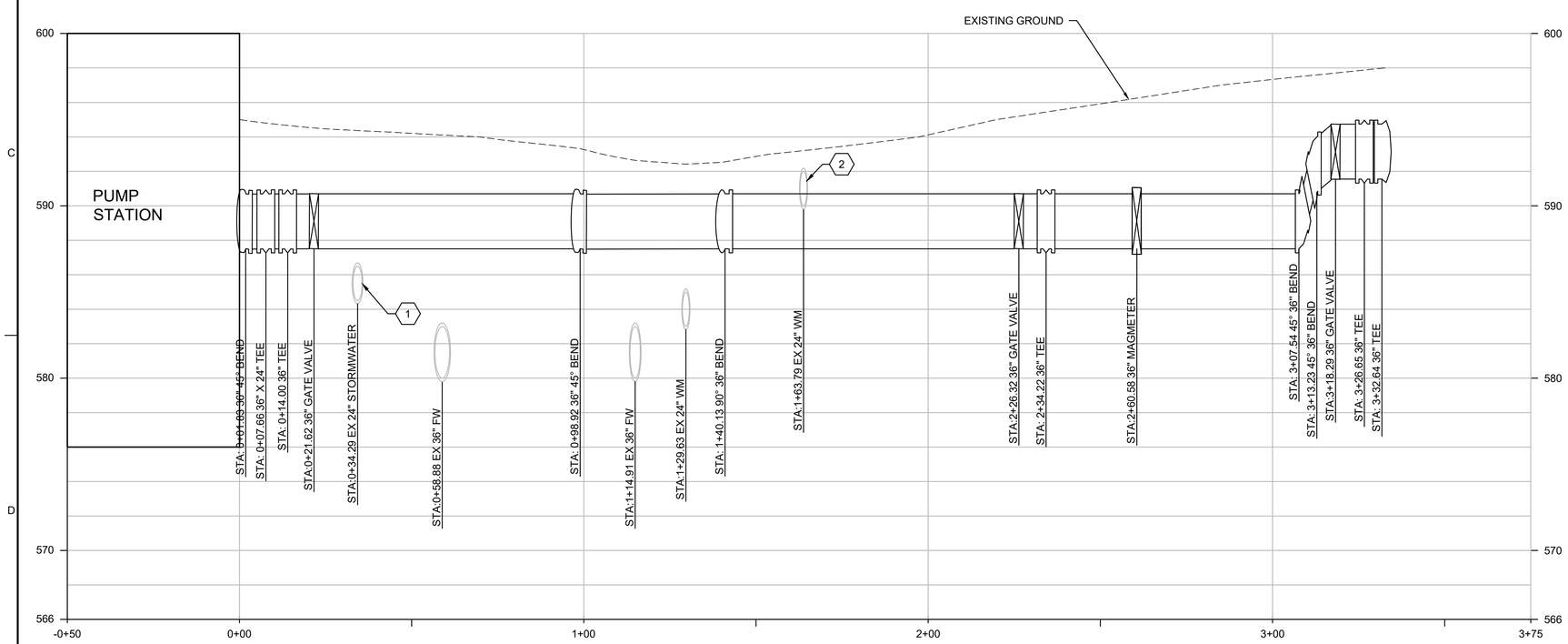

36" FW - FROM PUMP STATION TO EXISTING 24"

1" = 20'

GENERAL SHEET NOTES

1. REDUNDANT 36" FW LINE ON WESTERN SIDE HAS THE SAME PROFILE AS 36" FW FROM PUMP STATION TO EXISTING 24"
2. ELECTRICAL AND SANITARY SEWER LINES NOT SHOWN. CONTRACTOR TO CONFIRM LOCATION OF EXISTING.

SHEET KEYNOTES

1. EXCAVATE AROUND 24" STORMWATER PIPE TO UNDISTURBED SOIL AND BACKFILL AROUND 24" STORM WATER AND TO INVERT OF 36" WITH FLOWABLE FILL
2. EXISTING 24" WM TO BE DEMOLISHED.

ALABAMA LICENSED PROFESSIONAL ENGINEER MORGAN SUMMERLIN LAKEMAN PE51104

Morgan Lakeman

NO.	DATE	REVISION	BY	APVD

DSGN M LAKEMAN | DR P STEFANIAK | CHK M STICKLEY | APVD M LAKEMAN

PAUL B. KREBS WATER TREATMENT PLANT
IMPROVEMENTS
ANNISTON WATER WORKS & SEWER BOARD
CITY OF ANNISTON, ALABAMA

Jacobs

YARD PIPING
PLAN AND PROFILE

REUSE OF DOCUMENTS: THIS DOCUMENT, AND THE IDEAS AND DESIGNS INCORPORATED HEREIN, AS AN INSTRUMENT OF PROFESSIONAL SERVICE, IS THE PROPERTY OF JACOBS AND IS NOT TO BE USED, IN WHOLE OR IN PART, FOR ANY OTHER PROJECT WITHOUT THE WRITTEN AUTHORIZATION OF JACOBS.

VERIFY SCALE
BAR IS ONE INCH ON ORIGINAL DRAWING.
0 1"

DATE	SEPTEMBER 2024
PROJ	D3698100
DWG	05-Y-301
SHEET	34 of 145

BID DOCUMENTS

©JACOBS 2024. ALL RIGHTS RESERVED.

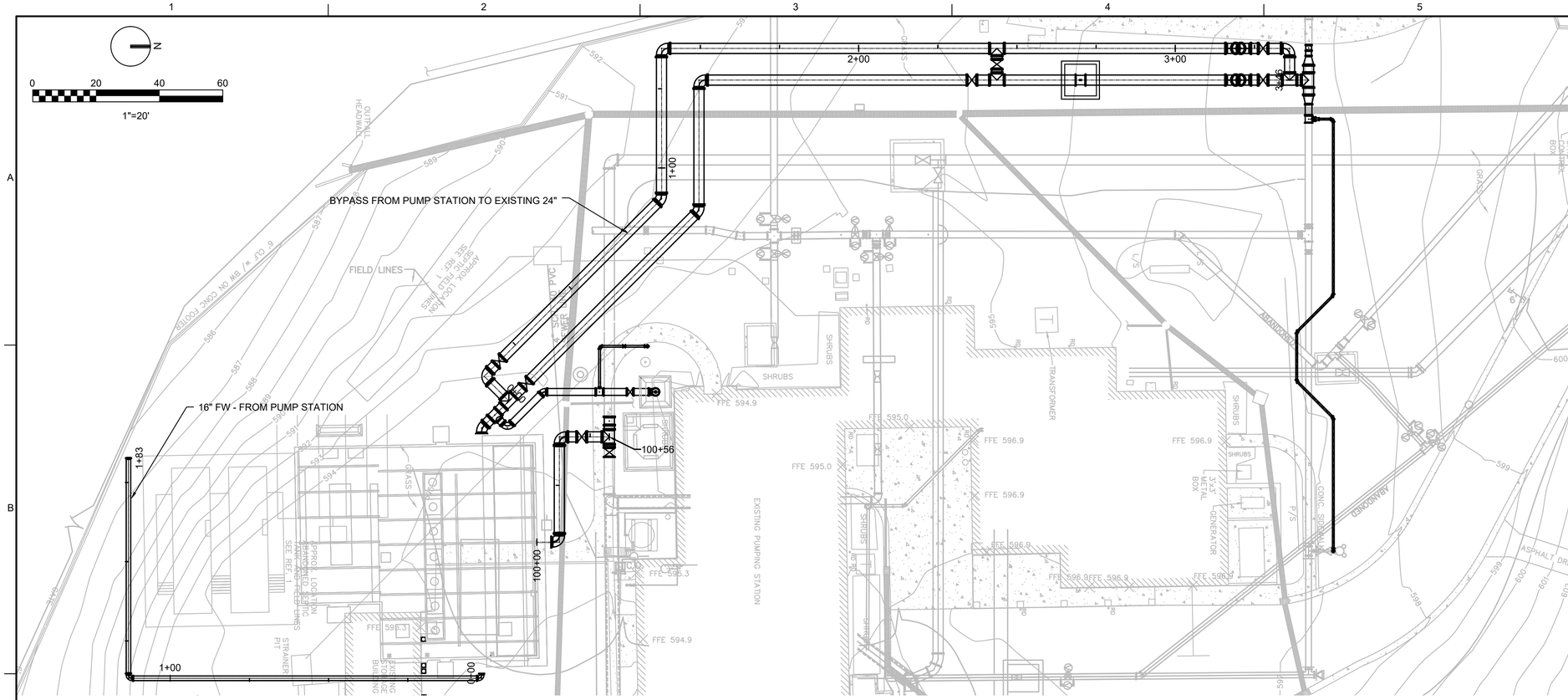

GENERAL SHEET NOTES

1. ELECTRICAL AND SANITARY SEWER LINES NOT SHOWN. CONTRACTOR TO CONFIRM LOCATION OF EXISTING.

SHEET KEYNOTES

1. EXISTING 24" WM TO BE DEMOLISHED.

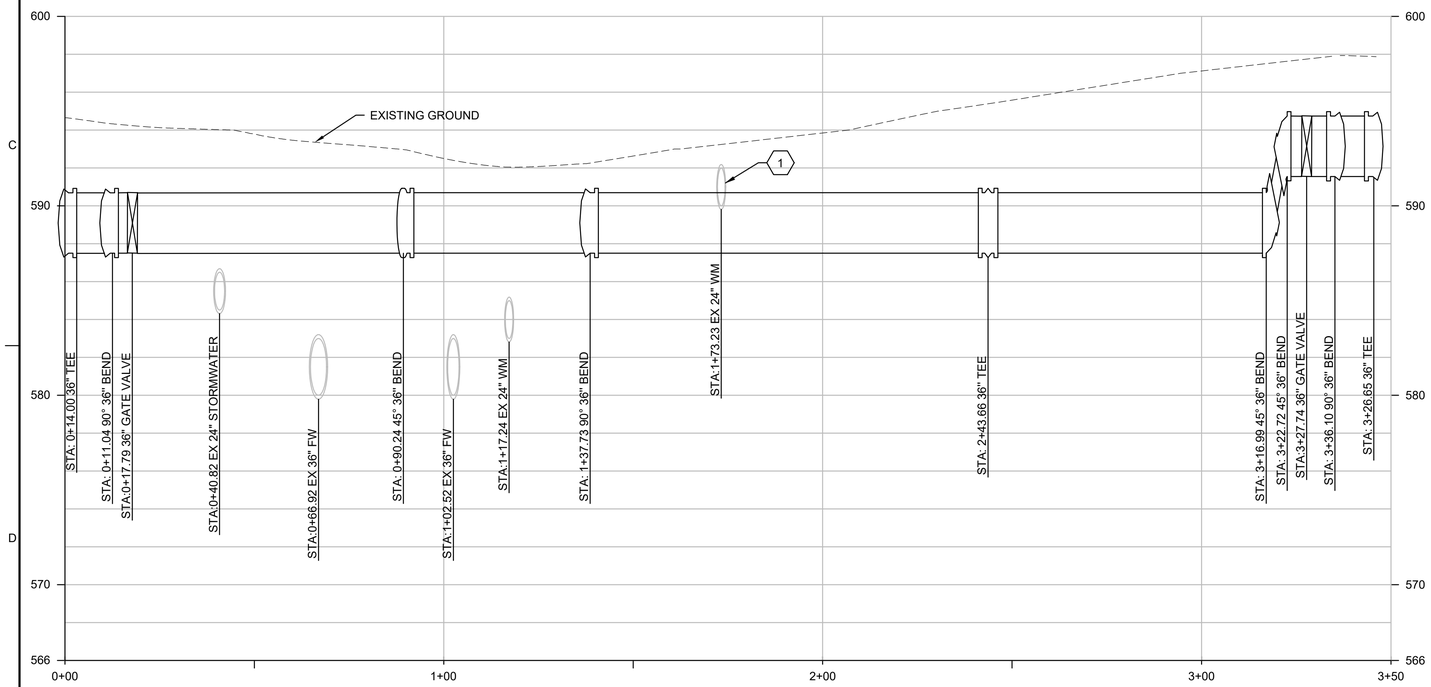

36" FW - BYPASS FROM PUMP STATION TO EXISTING 24"

1" = 20'

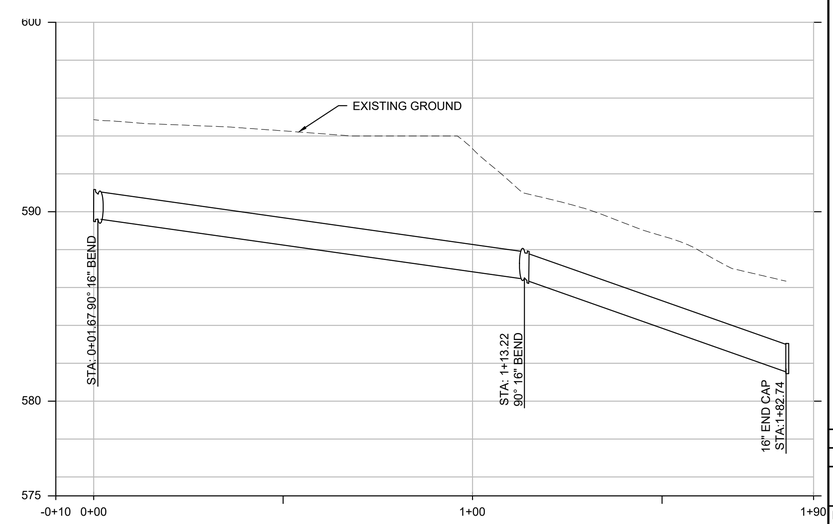

16" FW - FROM PUMP STATION

1" = 20'

NO.	DATE	REVISION	BY	APVD

DSGN	M LAKEMAN	DR	P STEFANIAK
		CHK	M STICKLEY
		APVD	M LAKEMAN

ALABAMA LICENSED PROFESSIONAL ENGINEER
Morgan Summerlin Lakeman
PE51134
Digitally signed by Morgan Summerlin Lakeman
Date: 2024.09.30 08:45:00 -05'00'

PAUL B. KREBS WATER TREATMENT PLANT
IMPROVEMENTS
ANNISTON WATER WORKS & SEWER BOARD
CITY OF ANNISTON, ALABAMA

YARD PIPING
PLAN AND PROFILE

REUSE OF DOCUMENTS: THIS DOCUMENT, AND THE IDEAS AND DESIGNS INCORPORATED HEREIN, AS AN INSTRUMENT OF PROFESSIONAL SERVICE, IS THE PROPERTY OF JACOBS AND IS NOT TO BE USED, IN WHOLE OR IN PART, FOR ANY OTHER PROJECT WITHOUT THE WRITTEN AUTHORIZATION OF JACOBS.

VERIFY SCALE
BAR IS ONE INCH ON ORIGINAL DRAWING.
0 1"

DATE	SEPTEMBER 2024
PROJ	D3698100
DWG	05-Y-302
SHEET	35 of 145

BID DOCUMENTS

©JACOBS 2024. ALL RIGHTS RESERVED.

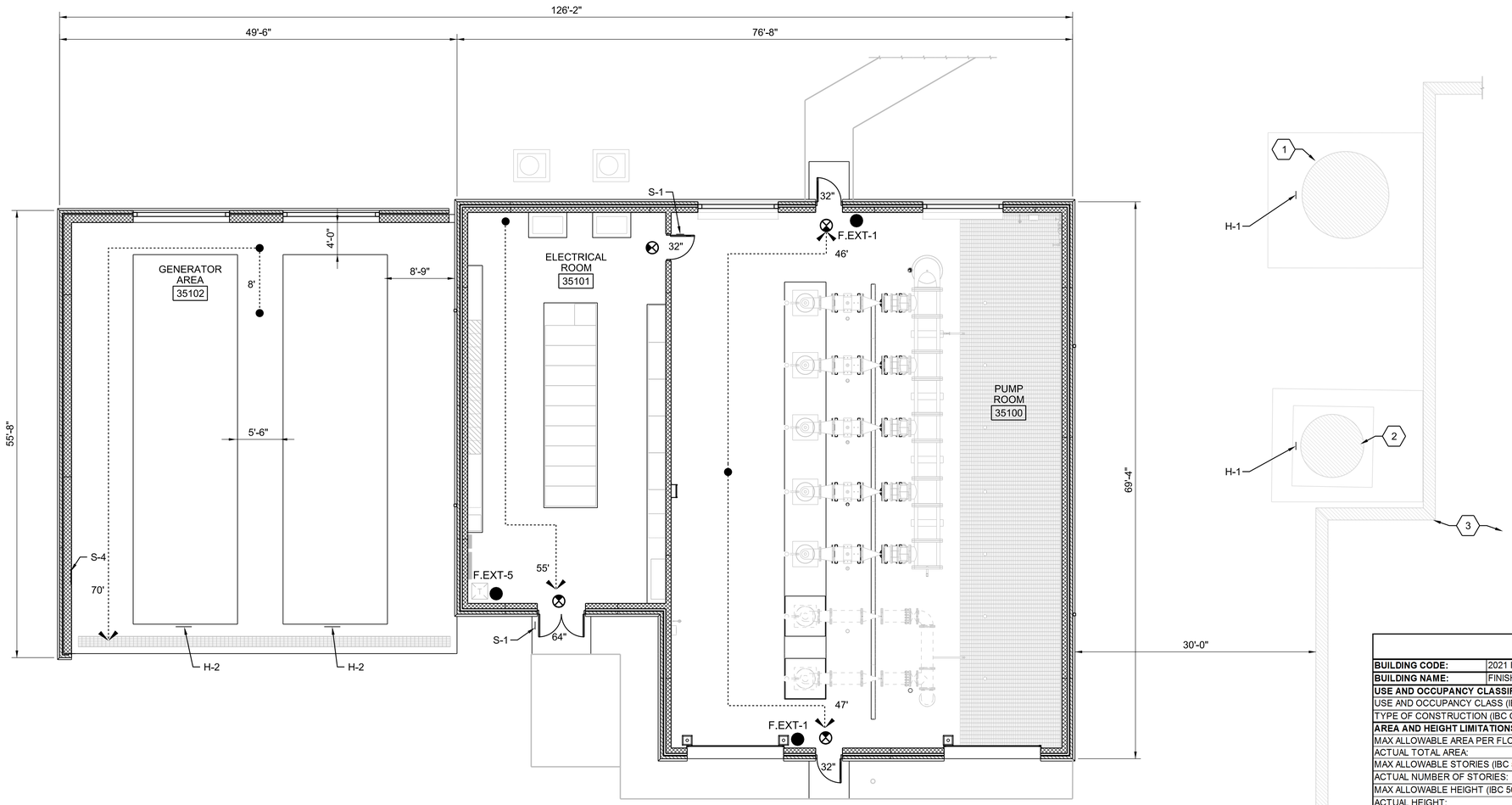

LIFE SAFETY PLAN

1/8"=1'-0"

LEGEND

- TRAVEL DISTANCE (X = TOTAL DISTANCE TO EXIT IN FEET)
- EGRESS WIDTH (IN INCHES)
- EXIT LIGHT, ONE SIDED
- FIRE EXTINGUISHER ON BRACKET
- SIGN TYPES LISTED ON SIGN SCHEDULE IN SPECIFICATION SECTION 10 14 00

SHEET KEYNOTES

1. NEW FLUORIDE TANK.
2. EXISTING FLUORIDE TANK.
3. EXISTING PUMPING STATION BUILDING.

HAZARDOUS MATERIAL INFORMATION:	
HYDROFLUOROSILICIC ACID (FLUORIDE) 25%	
CAS#	16961-83-4
HAZARD CATEGORY:	HEALTH (IFC 2701) - HIGHLY TOXIC
BLUE - HEALTH	3
RED-FLAMMABILITY	0
YELLOW - REACTIVITY	0
WHITE - SPECIAL	COR
HMIS PERSONAL PROTECTION	H
INCOMPATIBIITIES:	STRONG ACIDS AND BASES, CHLORITES, ORGANIC PEROXIDES, COMBUSTIBLE MATERIALS, AND METALS.
OUTDOOR STORAGE:	ONE EXISTING 3,800 GALLION TANK, ONE NEW 3,900 GALLION TANK
	MAXIMUM ALLOWABLE QUANTITY PER OUTDOOR CONTROL AREA - 2,000 GAL (IFC 5003.1.1(4). SPILL CONTROL AND SECONDARY CONTAINMENT FOR OUTDOOR STORAGE AREAS PROVIDED PER IFC 5004.2.2.
EXTINGUISHING MEDIA:	WILL NOT BURN, USE MATERIALS APPROPRIATE FOR SORROUNDING FIRE
SIGNAGE	HAZARD CATEGORY NUMBERS FOR HEALTH (BLUE), FLAMMABILITY (RED), REACTIVITEY (YELLOW) AND SPECIAL (WHITE) HAZARDS ARE BASED ON THE NFPA (NATIONAL FIRE PROTECTION AGENCY)HAZARD IDENTIFICATION CODING SYSTEM DIAMOND SYMBOL. SEE SPECIFICATION SECTION 10 14 00SIGNAGE FOR REQUIRED HAZARDOUS MATERIAL IDENTIFICATION. SIGN TYPE H-1

HAZARDOUS MATERIAL INFORMATION:	
DEISEL FUEL #2	
CAS#	68476-34-6
PHYSICAL HAZARD :	COMBUSTABLE -CLASS IIIB
HEALTH HAZARD	CARCINOGENICTY -CATEGORY 2
	ACUTE TOXICITY: INHALATION - CATEGORY 4
BLUE - HEALTH	1
RED-FLAMMABILITY	2
YELLOW - REACTIVITY	0
WHITE - SPECIAL	_
HMIS PERSONAL PROTECTION	H
INCOMPATIBIITIES:	OXIDIZING AGENTS, HEAT, FLAMES, SPARKS, IGNITION SOURCES
OUTDOOR STORAGE:	(2) DOUBLE WALL, VENTED 7,800 GALLION TANKS
EXTINGUISHING MEDIA:	DRY CHEMICAL, C02, REGULAR FOAM
SIGNAGE	HAZARD CATEGORY NUMBERS FOR HEALTH (BLUE), FLAMMABILITY (RED), REACTIVITEY (YELLOW) AND SPECIAL (WHITE) HAZARDS ARE BASED ON THE NFPA (NATIONAL FIRE PROTECTION AGENCY)HAZARD IDENTIFICATION CODING SYSTEM DIAMOND SYMBOL. SEE SPECIFICATION SECTION 10 14 00 SIGNAGE FOR REQUIRED HAZARDOUS MATERIAL IDENTIFICATION. SIGN TYPE H-2.

BUILDING CODE DATA

BUILDING CODE:	2021 INTERNATIONAL BUILDING CODE (IBC)	
BUILDING NAME:	FINISHED WATER PUMP STATION	
USE AND OCCUPANCY CLASSIFICATION AND TYPE OF CONSTRUCTION:		
USE AND OCCUPANCY CLASS (IBC CHAPTER 3):		F-2, FACTORY AND INDUSTRIAL
TYPE OF CONSTRUCTION (IBC CHAPTER 6):		TYPE V-B
AREA AND HEIGHT LIMITATIONS:		
MAX ALLOWABLE AREA PER FLOOR (IBC TABLE 506.2):		13,000 SF
ACTUAL TOTAL AREA:		4866 SF
MAX ALLOWABLE STORIES (IBC 504.4):		2 STORIES
ACTUAL NUMBER OF STORIES:		1 STORIES
MAX ALLOWABLE HEIGHT (IBC 504.3):		40 FEET
ACTUAL HEIGHT:		21 FEET
EGRESS REQUIREMENTS:		
DESIGN OCCUPANCT LOAD (IBC 1004.1):		15 OCCUPANTS
ACTUAL OCCUPANCT LOAD:		0 OCCUPANTS
EGRESS WIDTH BASED ON OCCUPANCY (IBC 1005.3):		3 INCHES MIN
MIN EXIT ACESS DOORWAYS WIDTH (IBC 1010.1.1):		32" REQUIRED, 32" PROVIDED
REQUIRED EXITS (TABLE1006.3.2) (NFPA 70-110.26)		2 EXTS REQUIRED FOR ELECTRICAL ROOMS. 2 EXITS PROVIDED FOR THE PUMP ROOM.
MAX COMMON PATH TRAVEL DISTANCE (IBC 1006.2.1)		75'
MAX TRAVEL DISTANCE (IBC TABLE 1016.2):		300'
MINIMUM PLUMBING FIXTURES (IBC TABLE 2902.1):		
DISTANCE TO TOILET (IBC 2902.3.3):		500 FT
REQUIRED FIRE RESISTANT RATINGS:		
BUILDING ELEMENTS HOURLY FIRE RATING (IBC TABLE 601):		
PRIMARY STRUCTURAL FRAME:		0 HOURS
EXTERIOR BEARING WALLS:		0 HOURS
INTERIOR BEARING WALLS:		0 HOURS
ROOF CONSTRUCTION:		0 HOURS
FIRE SEPARATION DISTANCE (IBC TABLE 705.5)		10<X<30, 0 HOURS
FIRE SEPARATION DISTANCE FOR BUILDINGS ON THE SAME LOT (IBC 705.3)		IMAGINARY LINE BETWEEN BUILDINGS - 30'-0" DIVIDED BY 2 = 15'-0"
REQUIRED SETBACKS FOR 7,800 GALLON FUEL STORAGE TANKS (NFPA 30, TABLES 22.4.1.1(a) AND 22.4.1.1(B))		MORE THAN 15' FROM THE PROPERTY LINE/ 0 HOURS MORE THAN 5' FROM THE BUILDING/ 0 HOURS
MINIMUM SHELL TO SHELL SPACING OF ABOVE GROUND STORAGE TANKS NFPA TABLE 22.4.1.5		1/6 MX SUM OF ADJACENT TANK DIAMITERS BUT NOT LESS THAN 3'-0"
FIRE PROTECTION:		
AUTOMATIC SPRINKLER SYSTEM (IBC 903):		NOT REQUIRED
FIRE EXTINGUISHERS (IBC 906):		REQUIRED, PROVIDED
SMOKE DETECTORS		NOT REQUIRED
MANUAL FIRE ALARM SYSTEM (IBC 907.2.4)		NOT REQUIRED
MEANS OF EGRESS ILLUMINATION (IBC 1008.2)		REQUIRED, PROVIDED
ENERGY CONSERVATION CRITERIA (IECC TABLE C402.1.3- ZONE 3)		
INSULATION (R-VALUE) (IECC Table C402.1.3):	ROOF:	R-25ci
	WALLS:	R7.6ci
	SWINGING DOORS:	U-061
	NONSWINGING DOORS	R-4.75
ACCESSIBILITY REQUIREMENTS:		
ADA REQUIREMENTS (IBC 1103.2.9): NOT REQUIRED TO BE ACCESSIBLE		
SPACES FREQUENTED BY ONLY SERVICE PERSONNEL FOR MAINTENANCE, REPAIR OR OCCASIONAL MONITORING OF EQUIPMENT ARE NOT REQUIRED TO COMPLY.		

STATE OF ALABAMA
ADAM N. DOLSAK
6305
REGISTERED ARCHITECT

Adam N. Dolsak

NO.	DATE	REVISION	BY	APVD

DSGN W HOLLINGSWORTH | DR V ROMAN | CHK A DOLSAK | APVD A DOLSAK

PAUL B. KREBS WATER TREATMENT PLANT
IMPROVEMENTS
ANNISTON WATER WORKS & SEWER BOARD
CITY OF ANNISTON, ALABAMA

REUSE OF DOCUMENTS: THIS DOCUMENT, AND THE IDEAS AND DESIGNS INCORPORATED HEREIN, AS AN INSTRUMENT OF PROFESSIONAL SERVICE, IS THE PROPERTY OF JACOBS AND IS NOT TO BE USED, IN WHOLE OR IN PART, FOR ANY OTHER PROJECT WITHOUT THE WRITTEN AUTHORIZATION OF JACOBS.

Jacobs

ARCHITECTURAL
FINISHED WATER PUMP STATION
LIFE SAFETY PLAN

VERIFY SCALE
BAR IS ONE INCH ON ORIGINAL DRAWING,
0 1"

DATE	OCTOBER 2024
PROJ	D3698100
DWG	35-A-200
SHEET	36 of 145

BID DOCUMENTS

©JACOBS 2024. ALL RIGHTS RESERVED.

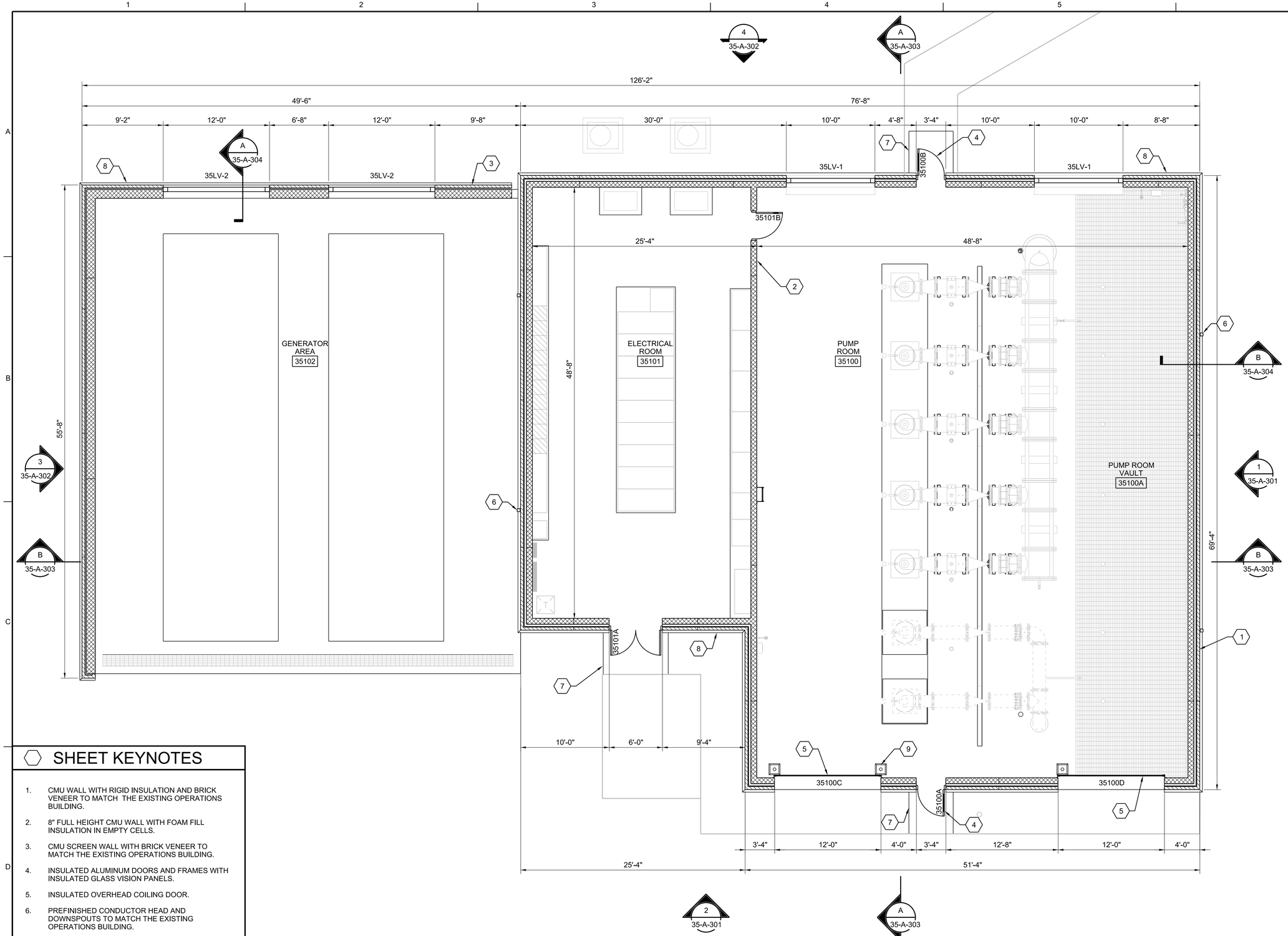

FLOOR PLAN

3/16"=1'-0"

SHEET KEYNOTES

1. CMU WALL WITH RIGID INSULATION AND BRICK VENEER TO MATCH THE EXISTING OPERATIONS BUILDING.
2. 8" FULL HEIGHT CMU WALL WITH FOAM FILL INSULATION IN EMPTY CELLS.
3. CMU SCREEN WALL WITH BRICK VENEER TO MATCH THE EXISTING OPERATIONS BUILDING.
4. INSULATED ALUMINUM DOORS AND FRAMES WITH INSULATED GLASS VISION PANELS.
5. INSULATED OVERHEAD COILING DOOR.
6. PREFINISHED CONDUCTOR HEAD AND DOWNSPOUTS TO MATCH THE EXISTING OPERATIONS BUILDING.
7. CONCRETE DOOR STOOP.
8. BRICK BULLNOSE WITH ECONOMY UNIT COURSE.
9. PIPE BOLLARD.

STATE OF ALABAMA
ADAM N. DOLSAK
6305
REGISTERED ARCHITECT

Adam N. Dolsak

Digitally signed by Adam N. Dolsak
DN: C=US, E=adolsak@jacobs.com, O=Jacobs Solutions Inc., L=Dallas, S=Texas, OID.2.5.4.5=1.3.6.1.4.1.311.60.2.1.1=1.3.6.1.4.1.311.60.2.1.3=US, 2.5.4.42=Adam N., 2.5.4.4=Dolsak
Date: 2024.10.28 14:34:08-04'00'

NO.	DATE	REVISION	BY	APVD

DSGN W HOLLINGSWORTH | DR P DENNING | CHK A DOLSAK | APVD A DOLSAK

PAUL B. KREBS WATER TREATMENT PLANT
IMPROVEMENTS
ANNISTON WATER WORKS & SEWER BOARD
CITY OF ANNISTON, ALABAMA

REUSE OF DOCUMENTS: THIS DOCUMENT, AND THE IDEAS AND DESIGNS INCORPORATED HEREIN, AS AN INSTRUMENT OF PROFESSIONAL SERVICE, IS THE PROPERTY OF JACOBS AND IS NOT TO BE USED, IN WHOLE OR IN PART, FOR ANY OTHER PROJECT WITHOUT THE WRITTEN AUTHORIZATION OF JACOBS.

Jacobs

ARCHITECTURAL
FINISHED WATER PUMP STATION
FLOOR PLAN

3/16"1'-0"
VERIFY SCALE
BAR IS ONE INCH ON ORIGINAL DRAWING.
0 1"

DATE	OCTOBER 2024
PROJ	D3698100
DWG	35-A-201
SHEET	37 of 145

BID DOCUMENTS

©JACOBS 2024. ALL RIGHTS RESERVED.

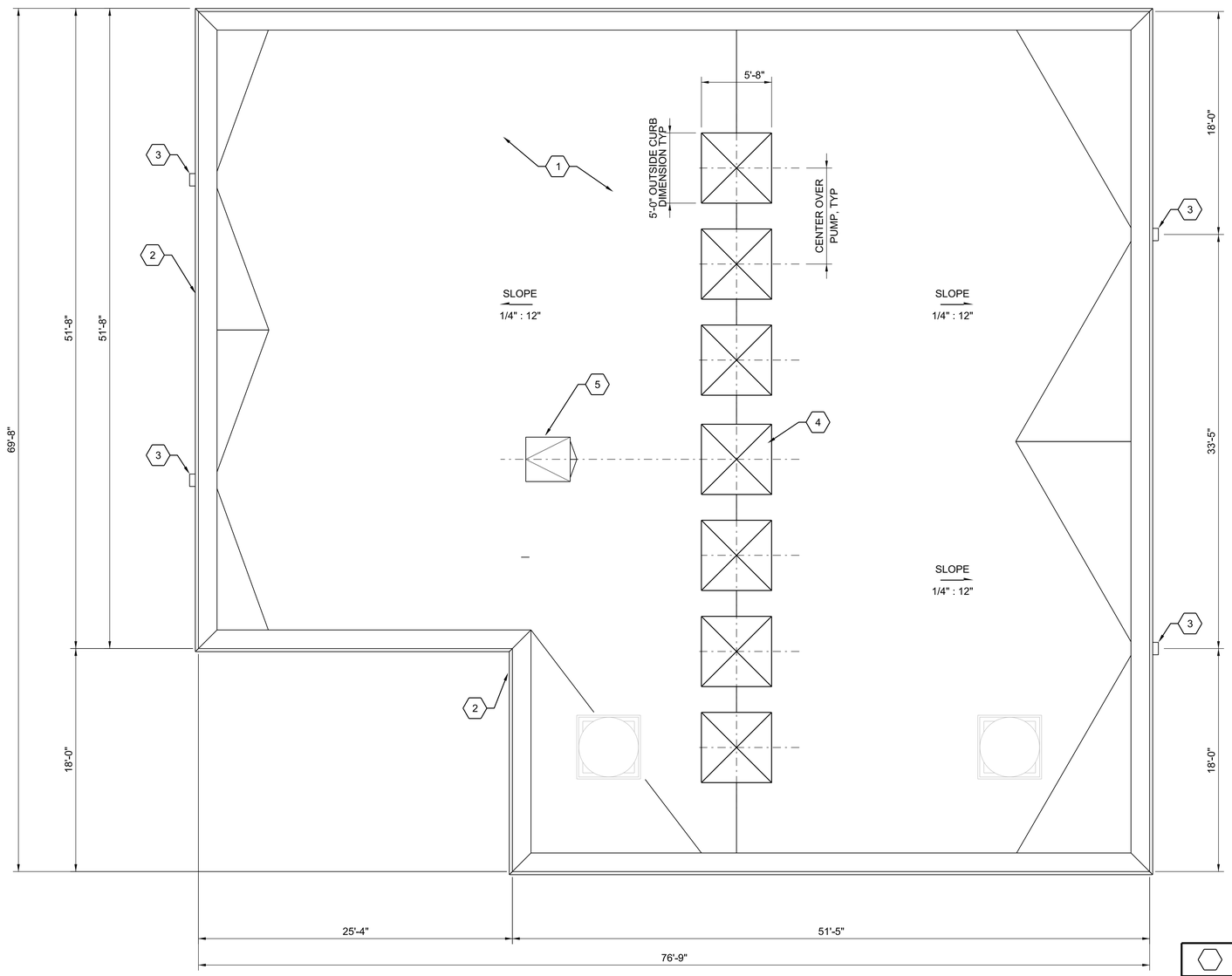

ROOF PLAN

3/16"=1'-0"

SHEET KEYNOTES

1. 80 MIL SINGLE PLY WHITE ROOFING MEMBRANE OVER COVER BOARD ON RIGID INSULATION OVER METAL DECK AND STRUCTURE.
2. 6" BULL NOSE CAST STONE COPING TO MATCH EXISTING BUILDING.
3. PREFINISHED CONDUCTOR HEAD AND DOWNSPOUTS TO STORM DRAIN.
4. REMOVABLE TRANSLUCENT SKYLIGHT SYSTEM ON CONCRETE CURBS CENTERED OVER PUMPS BELOW.
5. INSULATED ALUMINUM ROOF HATCH AND CURB.

STATE OF ALABAMA
ADAM N. DOLSAK
6305
REGISTERED ARCHITECT

Adam N. Dolsak

NO.	DATE	REVISION	BY	APVD

DSGN W HOLLINGSWORTH
DR P DENNING
CHK A DOLSAK
APVD A DOLSAK

PAUL B. KREBS WATER TREATMENT PLANT
IMPROVEMENTS
ANNISTON WATER WORKS & SEWER BOARD
CITY OF ANNISTON, ALABAMA

REUSE OF DOCUMENTS: THIS DOCUMENT, AND THE IDEAS AND DESIGNS INCORPORATED HEREIN, AS AN INSTRUMENT OF PROFESSIONAL SERVICE, IS THE PROPERTY OF JACOBS AND IS NOT TO BE USED, IN WHOLE OR IN PART, FOR ANY OTHER PROJECT WITHOUT THE WRITTEN AUTHORIZATION OF JACOBS.

Jacobs

ARCHITECTURAL
FINISHED WATER PUMP STATION
ROOF PLAN

3/16"1'-0"
VERIFY SCALE
BAR IS ONE INCH ON ORIGINAL DRAWING.
0 1"

DATE	OCTOBER 2024
PROJ	D3698100
DWG	35-A-202
SHEET	38 of 145

BID DOCUMENTS

©JACOBS 2024. ALL RIGHTS RESERVED.

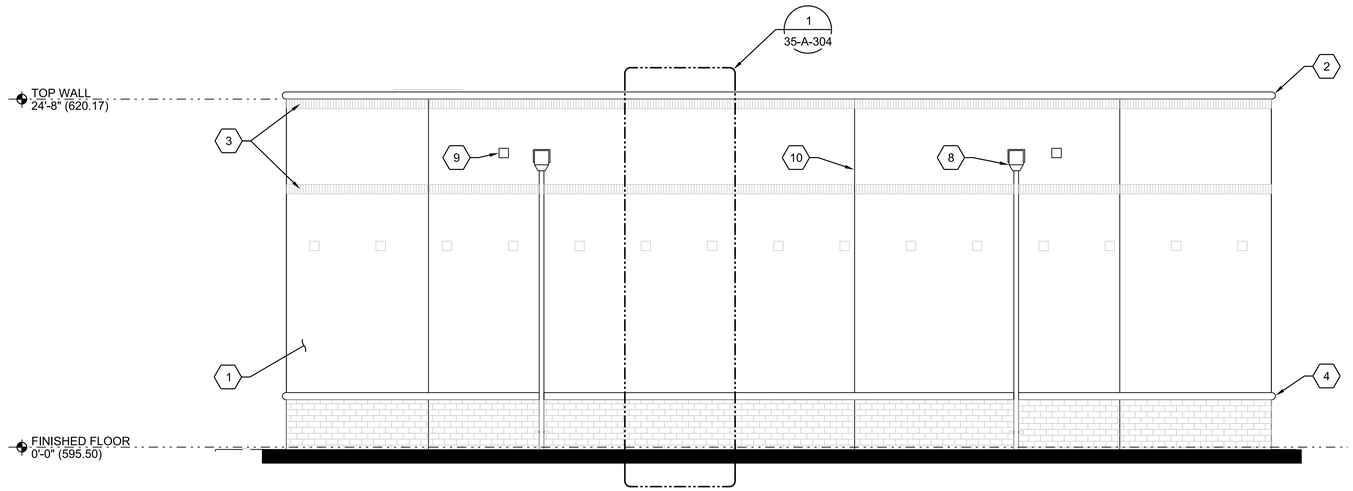

1 NORTH ELEVATION

3/16"=1'-0"

35-A-201

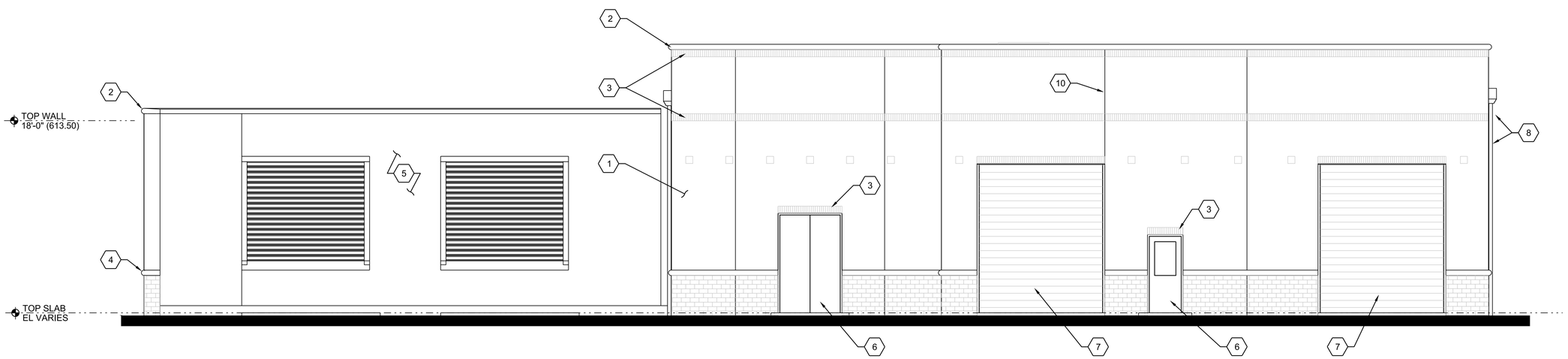

2 EAST ELEVATION

3/16"=1'-0"

35-A-201

SHEET KEYNOTES

1. CMU WALL WITH RIGID INSULATION AND BRICK VENEER TO MATCH THE EXISTING FACILITY.
2. BRICK BULLNOSE WITH ECONOMY UNIT COURSE.
3. BRICK SOLDER COURSE TO MATCH EXISTING BUILDING.
4. BRICK BULLNOSE WITH ECONOMY UNIT COURSE.
5. CMU SCREEN WALL WITH BRICK VENEER TO MATCH THE EXISTING FACILITY.
6. INSULATED ALUMINUM DOORS AND FRAMES WITH INSULATED GLASS VISION PANELS.
7. INSULATED OVERHEAD COILING DOOR.
8. PREFINISHED CONDUCTOR HEAD AND DOWNSPOUT TO STORM DRAIN.
9. OVERFLOW SCUPPER.
10. MASONRY CONTROL JOINT.

STATE OF ALABAMA
ADAM N. DOLSAK
6305
REGISTERED ARCHITECT

Adam N. Dolsak

NO.	DATE	REVISION	BY	APVD

DSGN W HOLLINGSWORTH | DR P DENNING | CHK A DOLSAK | APVD A DOLSAK

PAUL B. KREBS WATER TREATMENT PLANT
IMPROVEMENTS
ANNISTON WATER WORKS & SEWER BOARD
CITY OF ANNISTON, ALABAMA

Jacobs

ARCHITECTURAL
FINISHED WATER PUMP STATION
NORTH AND EAST ELEVATIONS

REUSE OF DOCUMENTS: THIS DOCUMENT, AND THE IDEAS AND DESIGNS INCORPORATED HEREIN, AS AN INSTRUMENT OF PROFESSIONAL SERVICE, IS THE PROPERTY OF JACOBS AND IS NOT TO BE USED, IN WHOLE OR IN PART, FOR ANY OTHER PROJECT WITHOUT THE WRITTEN AUTHORIZATION OF JACOBS.

3/16"1'-0"
VERIFY SCALE
BAR IS ONE INCH ON ORIGINAL DRAWING.
0 1"

DATE	OCTOBER 2024
PROJ	D3698100
DWG	35-A-301
SHEET	39 of 145

BID DOCUMENTS

©JACOBS 2024. ALL RIGHTS RESERVED.

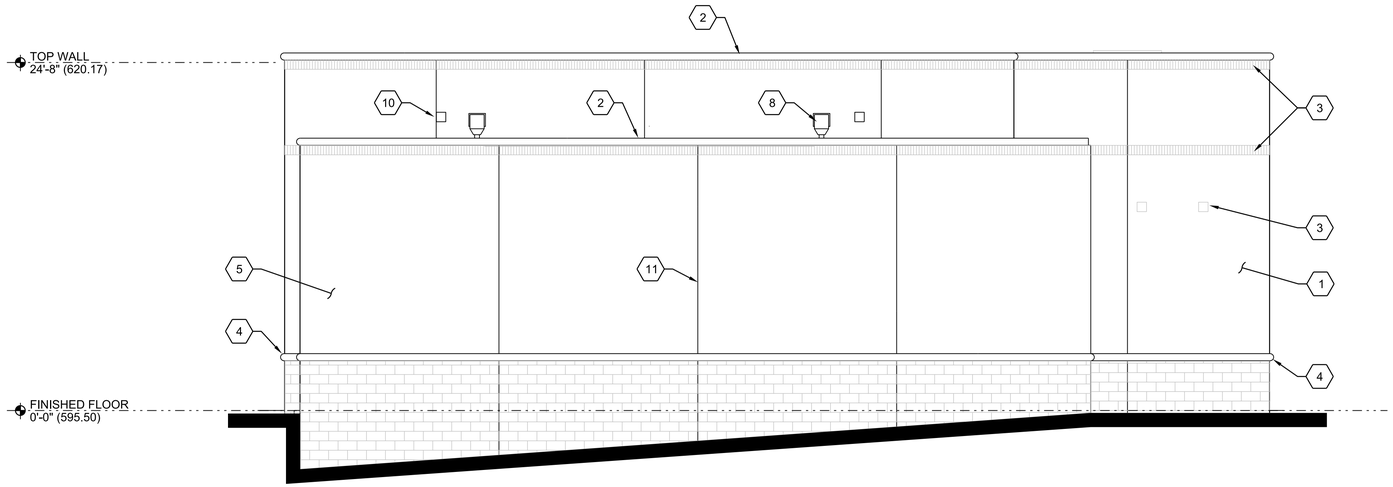

3 SOUTH ELEVATION
3/16"=1'-0"
35-A-201

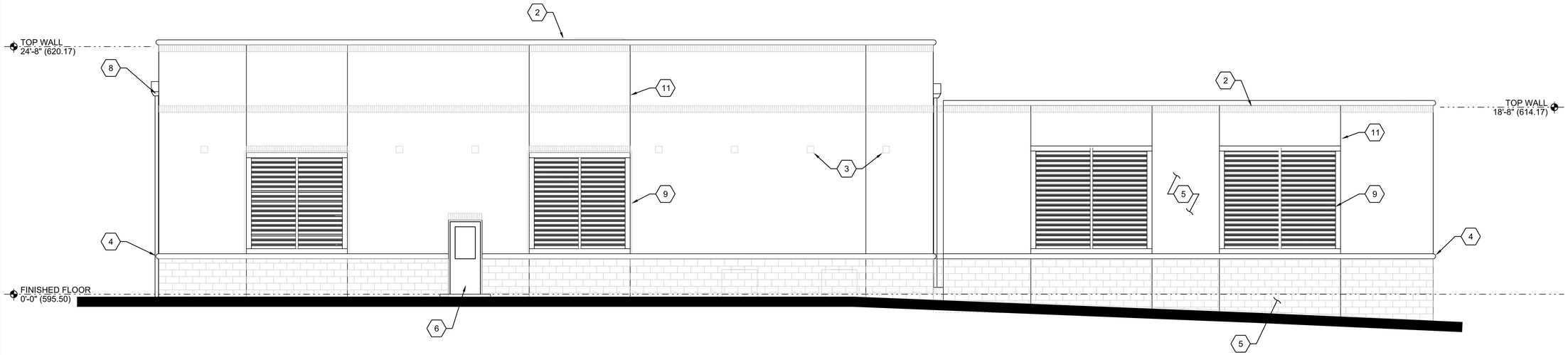

4 WEST ELEVATION
3/16"=1'-0"
35-A-201

SHEET KEYNOTES

1. CMU WALL WITH RIGID INSULATION AND BRICK VENEER TO MATCH THE EXISTING FACILITY.
2. BRICK BULLNOSE WITH ECONOMY UNIT COURSE.
3. BRICK SOLDER COURSE TO MATCH EXISTING BUILDING.
4. BRICK BULLNOSE WITH ECONOMY UNIT COURSE.
5. CMU SCREEN WALL WITH BRICK VENEER TO MATCH THE EXISTING FACILITY.
6. INSULATED ALUMINUM DOORS AND FRAMES WITH INSULATED GLASS VISION PANELS.
7. INSULATED OVERHEAD COILING DOOR.
8. PREFINISHED CONDUCTOR HEAD AND DOWNSPOUTS TO MATCH EXISTING BUILDING.
9. ALUMINUM LOUVERS.
10. OVERFLOW SCUPPER.
11. MASONRY CONTROL JOINT.

STATE OF ALABAMA
ADAM N. DOLSAK
6305
REGISTERED ARCHITECT
Adam N. Dolsak

NO.	DATE	REVISION	BY	APVD

DSGN W HOLLINGSWORTH | DR P DENNING | CHK A DOLSAK | APVD A DOLSAK

PAUL B. KREBS WATER TREATMENT PLANT
IMPROVEMENTS
ANNISTON WATER WORKS & SEWER BOARD
CITY OF ANNISTON, ALABAMA

Jacobs

ARCHITECTURAL
FINISHED WATER PUMP STATION
SOUTH AND WEST ELEVATIONS

REUSE OF DOCUMENTS: THIS DOCUMENT, AND THE IDEAS AND DESIGNS INCORPORATED HEREIN, AS AN INSTRUMENT OF PROFESSIONAL SERVICE, IS THE PROPERTY OF JACOBS AND IS NOT TO BE USED, IN WHOLE OR IN PART, FOR ANY OTHER PROJECT WITHOUT THE WRITTEN AUTHORIZATION OF JACOBS.

3/16"1'-0"
VERIFY SCALE
BAR IS ONE INCH ON ORIGINAL DRAWING.
0 1"

DATE	OCTOBER 2024
PROJ	D3698100
DWG	35-A-302
SHEET	40 of 145

BID DOCUMENTS

©JACOBS 2024. ALL RIGHTS RESERVED.

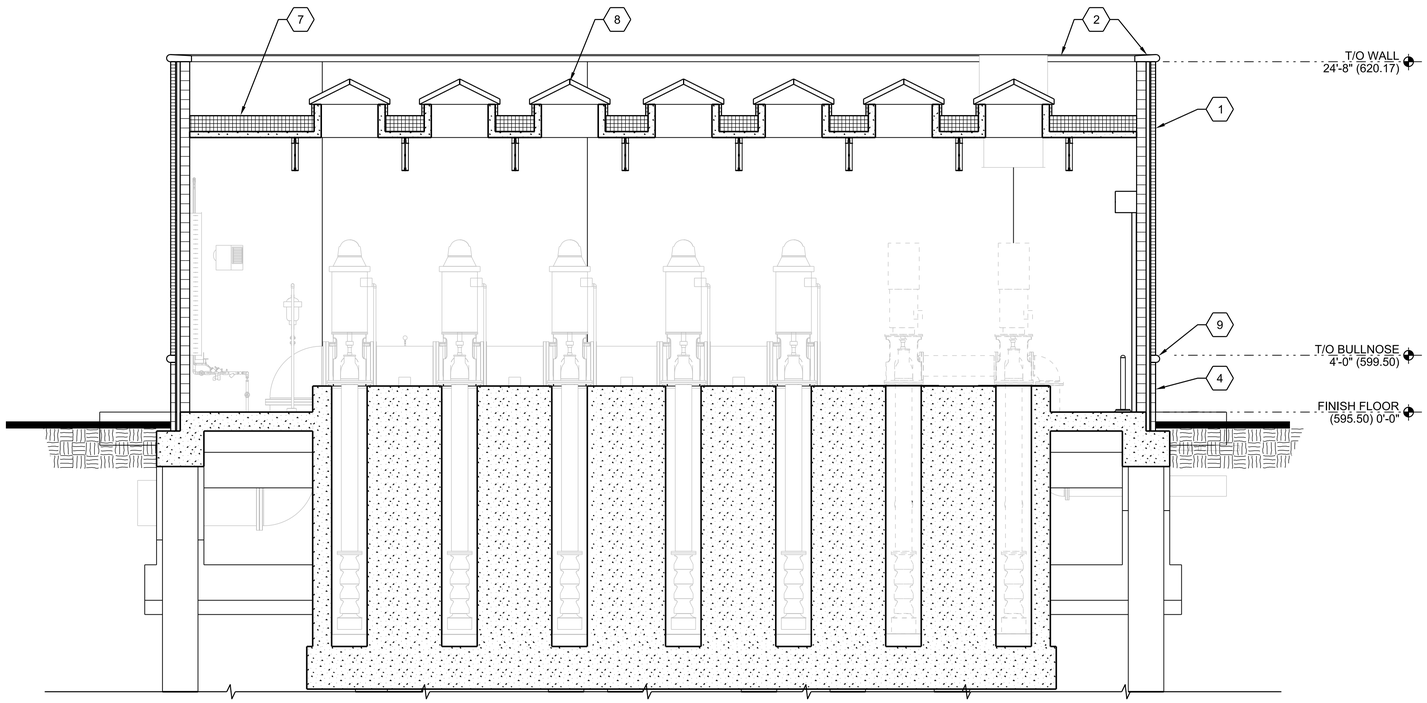

A SECTION
3/16"=1'-0"
35-A-201

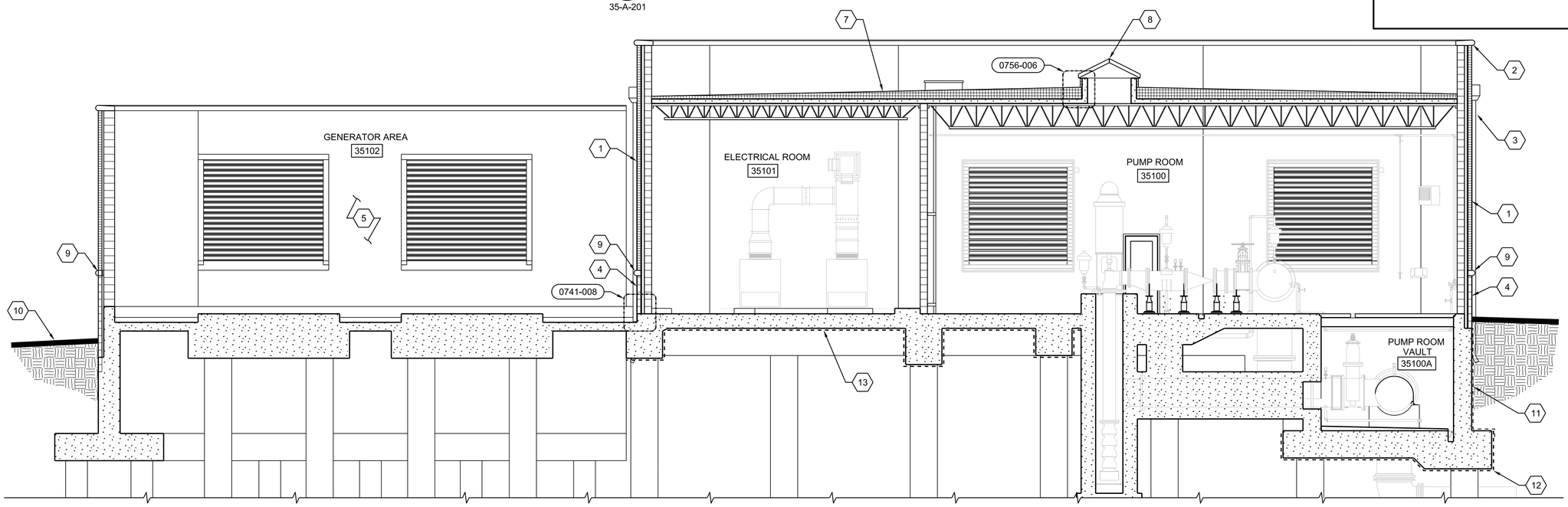

B SECTION
3/16"=1'-0"
35-A-201

SHEET KEYNOTES

1. CMU WALL WITH RIGID INSULATION AND BRICK VENEER TO MATCH THE EXISTING FACILITY.
2. BRICK BULLNOSE WITH ECONOMY UNIT COURSE.
3. PREFINISHED CONDUCTOR HEAD AND DOWNSPOUTS TO STORM DRAIN.
4. SPLIT FACE BLOCK VENEER.
5. CMU SCREEN WALL WITH BRICK VENEER TO MATCH THE EXISTING FACILITY.
6. INSULATED HOLLOW METAL DOORS AND FRAMES WITH INSULATED GLASS VISION PANELS.
7. 80 MIL. SINGLE PLY, WHITE ROOFING MEMBRANE OVER COVER BOARD ON RIGID INSULATION OVER METAL DECK AND STRUCTURE.
8. REMOVABLE TRANSLUCENT SKYLIGHT SYSTEM ON CONCRETE CURBS CENTERED OVER PUMPS BELOW.
9. BRICK BULLNOSE WITH ECONOMY UNIT COURSE.
10. APPROXIMATE GRADE, SEE CIVIL.
11. FLUID APPLIED WATERPROOFING WITH GEOCOMPOSITE DRAINAGE SHEET.
12. PRE-APPLIED WATERPROOFING MEMBRANE.
13. BELOW GRADE VAPOR RETARDER.

STATE OF ALABAMA
ADAM N. DOLSAK
6305
REGISTERED ARCHITECT
Adam N. Dolsak

NO.	DATE	REVISION	BY	APVD

DSGN W HOLLINGSWORTH | DR P DENNING | CHK A DOLSAK | APVD A DOLSAK

PAUL B. KREBS WATER TREATMENT PLANT
IMPROVEMENTS
ANNISTON WATER WORKS & SEWER BOARD
CITY OF ANNISTON, ALABAMA

REUSE OF DOCUMENTS: THIS DOCUMENT, AND THE IDEAS AND DESIGNS INCORPORATED HEREIN, AS AN INSTRUMENT OF PROFESSIONAL SERVICE, IS THE PROPERTY OF JACOBS AND IS NOT TO BE USED, IN WHOLE OR IN PART, FOR ANY OTHER PROJECT WITHOUT THE WRITTEN AUTHORIZATION OF JACOBS.

Jacobs

ARCHITECTURAL
FINISHED WATER PUMP STATION
BUILDING SECTIONS

3/16"1'-0"
VERIFY SCALE
BAR IS ONE INCH ON ORIGINAL DRAWING.
0 1"

DATE	OCTOBER 2024
PROJ	D3698100
DWG	35-A-303
SHEET	41 of 145

BID DOCUMENTS

FILENAME: 35-A-303_D3698100.dgn PLOT DATE: 10/22/2024 PLOT TIME: 12:53:07 PM

©JACOBS 2024. ALL RIGHTS RESERVED.

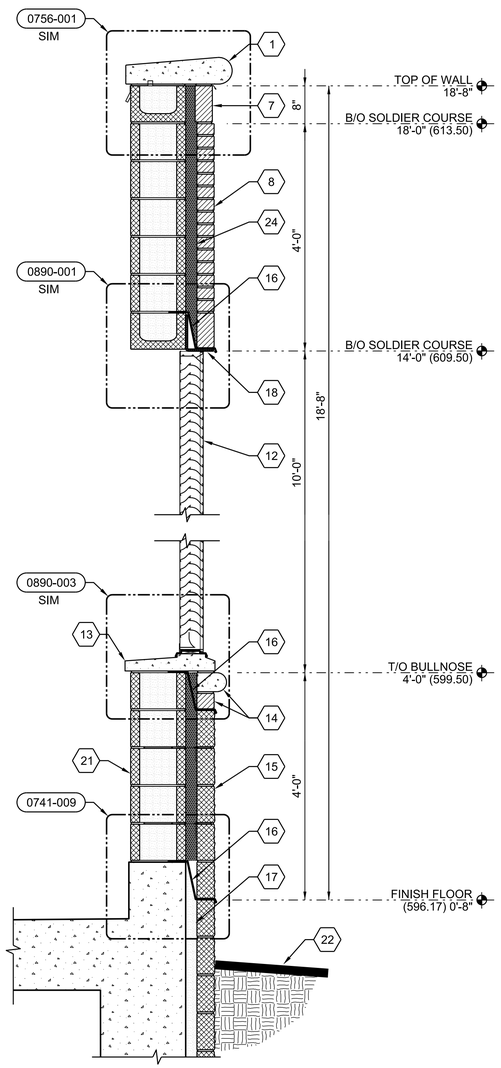

A SECTION
3/4"=1'-0"
35-A-201

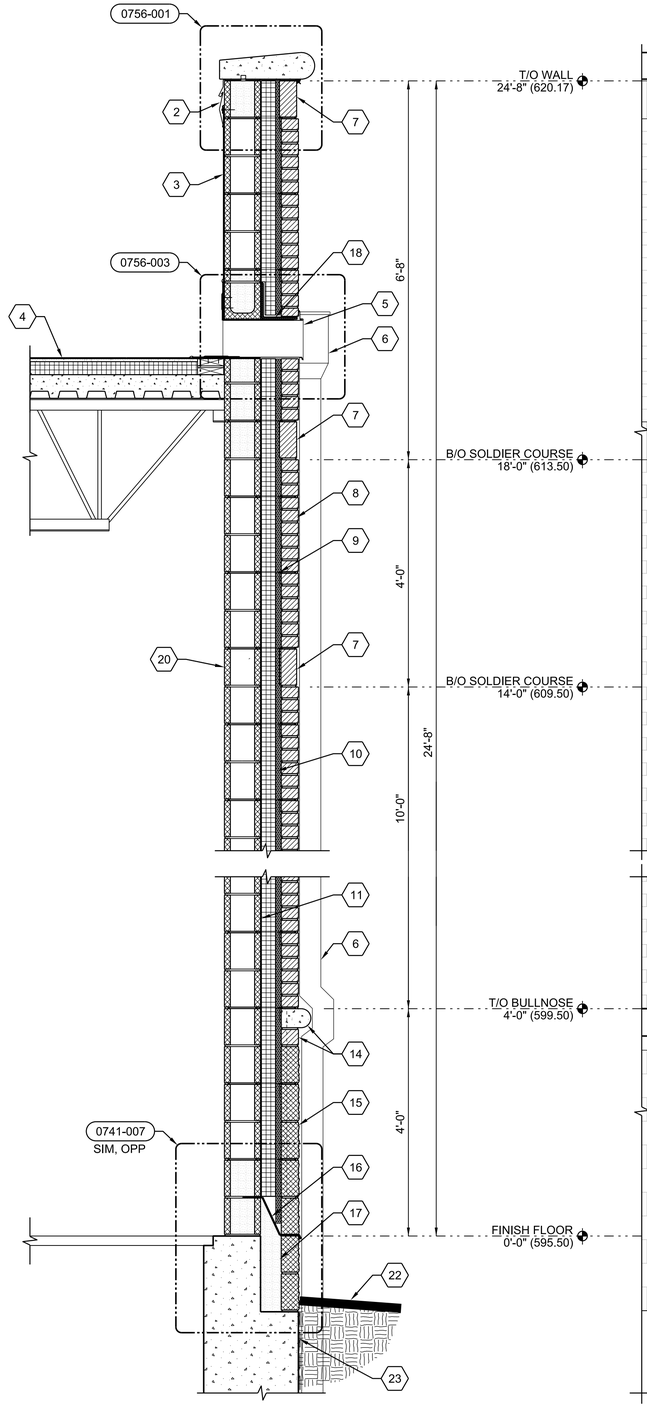

B SECTION
3/4"=1'-0"
35-A-201

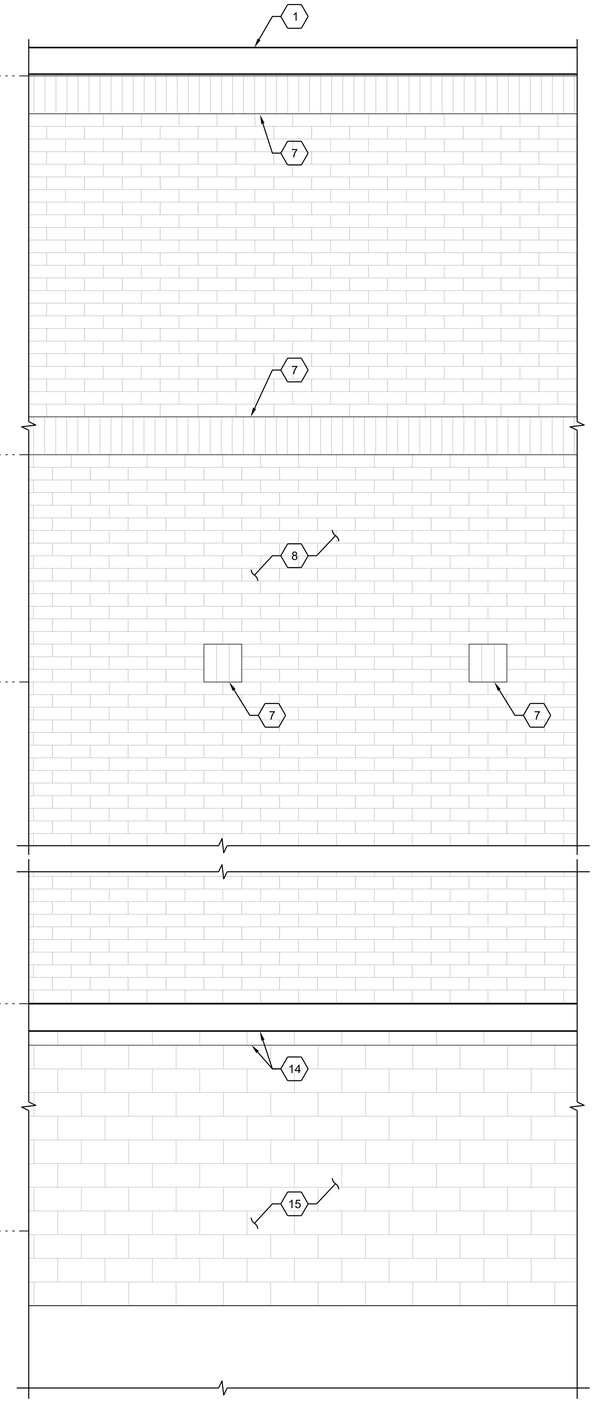

1 ENLARGED ELEVATION
3/4"=1'-0"
35-A-301

SHEET KEYNOTES

1. BRICK BULLNOSE WITH ECONOMY UNIT COURSE.
2. THROUGH WALL FLASHING WITH COUNTERFLASHING.
3. 80 MIL SINGLE PLY MEMBRANE ROOFING.
4. 80 MIL SINGLE PLY WHITE ROOFING MEMBRANE OVER COVER BOARD OVER INSULATION OVER COMPOSITE METAL DECK.
5. PREMANUFACTURED SCUPPER BOX.
6. PREFINISHED CONDUCTOR HEAD AND DOWNSPOUT TO STORM DRAIN.
7. RECESSED BRICK SOLDIER COURSE, SLOPE BED JOINT TYPICAL. BRICK TYPE A.
8. BRICK VENEER. BRICK TYPE B.
9. VENEER TIES.
10. CAVITY WALL INSULATION SYSTEM.
11. FLUID APPLIED AIR AND WATER BARRIER.
12. DOUBLE DRAINABLE ALUMINUM LOUVER.
13. PRECAST SILL.
14. BRICK BULLNOSE WITH ECONOMY UNIT COURSE. BRICK TYPE A.
15. SPLIT FACE CMU.
16. CONTINUOUS THROUGH WALL FLASHING WITH WEEPS AT 24" OC MINIMUM.
17. GROUT CAVITY SOLID.
18. STEEL LINTEL, PAINTED TO MATCH VENEER.
19. FOUNDATION WALL.
20. 8" CMU INNER WYTHE.
21. 12" CMU INNER WYTHE.
22. APPROXIMATE GRADE, SEE CIVIL.
23. FLUID APPLIED WATERPROOFING WITH GEOCOMPOSITE DRAINAGE SHEET.
24. MASONRY MAT FULL HEIGHT.

STATE OF ALABAMA
ADAM N. DOLSAK
6305
REGISTERED ARCHITECT
Adam N. Dolsak

NO.	DATE	REVISION	BY	APVD

DSGN W HOLLINGSWORTH | DR P DENNING | CHK A DOLSAK | APVD A DOLSAK

PAUL B. KREBS WATER TREATMENT PLANT
IMPROVEMENTS
ANNISTON WATER WORKS & SEWER BOARD
CITY OF ANNISTON, ALABAMA

REUSE OF DOCUMENTS: THIS DOCUMENT, AND THE IDEAS AND DESIGNS INCORPORATED HEREIN, AS AN INSTRUMENT OF PROFESSIONAL SERVICE, IS THE PROPERTY OF JACOBS AND IS NOT TO BE USED, IN WHOLE OR IN PART, FOR ANY OTHER PROJECT WITHOUT THE WRITTEN AUTHORIZATION OF JACOBS.

Jacobs

ARCHITECTURAL
FINISHED WATER PUMP STATION WALL SECTIONS

VERIFY SCALE
BAR IS ONE INCH ON ORIGINAL DRAWING.
0 1"

DATE	OCTOBER 2024
PROJ	D3698100
DWG	35-A-304
SHEET	42 of 145

BID DOCUMENTS

©JACOBS 2024. ALL RIGHTS RESERVED.

DOOR AND HARDWARE SCHEDULE

ABBREVIATIONS:

AS	AS SELECTED	HM	HOLLOW METAL
COL	COLOR	MATL	MATERIAL
CONSTR	CONSTRUCTION	MTL	METAL
CR	CARD READER	OHC	OVERHEAD COILING DOOR
EXT	EXTERIOR	STL	STEEL
FCTY	FACTORY		
FNSH	FINISH		
IG-DP	INSULATING GLASS, DOUBLE PANE		

NOTES:

NO. 1 SEE THIS SHEET FOR DOOR AND FRAME TYPES.
NO. 2 FOR DOOR DETAILS, SEE DESIGN DETAILS.
NO. 3 NUMBER CODE IN HARDWARE SET COLUMN REFERS TO HARDWARE SETS IN SPECIFICATION SECTION 08 71 00.
NO. 4 NUMBERS IN FINISH COLUMN REFER TO PAINT SYSTEMS IN SPECIFICATION SECTION 09 90 00.
NO. 5 CODES IN COL COLUMN REFER TO COLOR LIST ON THIS SHEET.
NO. 6 FOR GLASS TYPES, SEE SPECIFICATION SECTION 08 11 00B.
NO. 7 MAXIMUM EFFORT TO OPEN INTERIOR/EXTERIOR DOOR IS 5 POUNDS.

OPENING															HARDWARE		FIRE PROTECTION RATING	OTHER REQUIREMENTS
NO.	SIZE		DOOR					FRAME				DETAILS						
	WIDTH	HEIGHT	CONSTR	TYPE	GLASS	FINISH	COL	MATL	TYPE	FINISH	COL	HEAD	JAMB	SILL	SET NO.	KEY SIDE		
35100A	3'-0"	7'-2"	AL	HG	IG-DP	FCTY	O4	AL	F-1	FCTY	O4	0841-004	0841-005	0871-001	HW-2	EXT	---	
35100B	3'-0"	7'-2"	AL	HG	IG-DP	FCTY	O4	AL	F-1	FCTY	O4	0841-004	0841-005	0871-001	HW-2	EXT	---	
35100C	12'-0"	14'-0"	STL	OHC	---	FCTY	O-1	STL	F-3	FCTY	O-1	0833-001	0833-002	0833-002	HW-4	---	---	
35100D	12'-0"	14'-0"	STL	OHC	---	FCTY	O-1	STL	F-3	FCTY	O-1	0833-001	0833-002	0833-002	HW-4	---	---	
35101A	(2) 3'-0"	10'-0"	AL	DD	---	FCTY	O4	AL	F-2	FCTY	O4	0841-004	0841-005	0871-001	HW-1	EXT	---	
35101B	3'-0"	7'-2"	AL	HG	IG-DP	FCTY	O5	AL	F-1	FCTY	O5	0841-006	0841-006	0871-002	HW-3	35100	---	M1 SIGNAGE: ELECTRICAL ROOM

INTERIOR FINISH SCHEDULE

ABBREVIATIONS:

AL	ALUMINUM	DWG	SEE DRAWINGS	MATL	MATERIAL
AS	AS SELECTED	EXP	EXPOSED STRUCTURE	MTL	METAL
CLR	CLEAR	FCTY	FACTORY	STL	STEEL
CMU	CONCRETE MASONRY UNIT	FNSH	FINISH	PS	PAINT SYSTEM
COL	COLOR	GALV	GALVANIZED	RUB	RUBER BASE
CONC	CONCRETE	HGT	HEIGHT		

NOTES:

NO. 1 NUMBERS IN THE FINISH COLUMN REFER TO PAINT SYSTEMS IN SPECIFICATION SECTION 09 90 00.
NO. 2 CODES IN COL COLUMN REFER TO COLOR LIST ON THIS DRAWING.
NO. 3 FOR EXTERIOR FINISHES AND COLORS, SEE EXTERIOR FINISH SCHEDULE ON THIS DRAWING.
NO. 4 FOR DOOR AND FRAME FINISHES, SEE DOOR AND HARDWARE SCHEDULE ON THIS DRAWING.

SPACE		FLOOR			BASE AND WAINSCOT					TYPICAL WALL			OTHER WALL			CEILING				MISCELLANEOUS				OTHER REQUIREMENTS
NO.	NAME	SUB FL	FINISH	COL	HGT	MATL	FINISH	COL	WALLS	MATL	FINISH	COL	MATL	FINISH	COL	HGT	MATL	FINISH	COL	ITEM	MATL	FINISH	COL	
35100	PUMP ROOM	CONC	121	P-6	4"	CMU	RUB	M-4	---	CMU	109	P-2	---	---	---	---	EXP	106	P-2					
35100A	PUMP ROOM VAULT	CONC	121	P-6	---	---	---	---	---	CONC	121	P-6	---	---	---	---	EXP	106	P-2					
35101	ELECTRICAL ROOM	CONC	121	P-6	4"	CMU	RUB	M-4	---	CMU	109	P-2	---	---	---	---	EXP	106	P-2					M1 SIGNAGE - ELECTRICAL ROOM 35101
35102	GENERATOR AREA	CONC	---	P-6	---	---	---	---	---	CMU	109	P-5	---	---	---	---	---	---	---					

LOUVER SCHEDULE

LOUVER TYPE ABBREVIATION OTHER ABBREVIATIONS:

AC	ACOUSTICAL	FCTY	FACTORY
AFF	ABOVE FINISH FLOOR (AT GROUND LEVEL)	SP	STORMPROOF
AL	ALUMINUM	SPL	SIGHT PROOF LOUVER
AS	AS SELECTED	PRE	PRECAST
BR	BRICK		

NOTES:

NO. 1 FOR LOUVER DETAILS, SEE DESIGN DETAILS.
NO. 2 CODES IN COL COLUMN REFER TO COLOR LIST ON THIS DRAWING.
NO. 3 SILL HEIGHT REFERENCES BUILDING FINISH FLOOR @ EL 595.50.

OPENING										SILLS			OTHER REQUIREMENTS
NO.	SIZE		LOUVER				DETAILS						
	WIDTH	HEIGHT	MATL	TYPE	FINISH	COL	HEAD	JAMB	SILL	MATL	COLOR	HEIGHT	
35LV-1	10'-0"	10'-0"	FIXED	SP	FCTY	O-2	0890-001	0890-002	0890-003	CMU/BR	FCTY	---	---
35LV-2	12'-0"	9'-8"	FIXED	SPL	FCTY	O-2	0890-001	0890-002	0890-003	PRE	FCTY	---	NOTE 3

EXTERIOR FINISH SCHEDULE

ITEM / MATERIAL	FINISH	COLOR
6" PRECAST COPING CAP AND SILLS	INTERGRAL COLOR / SLR	W-1
FIELD VENEER BRICK - TYPE B	INTERGRAL COLOR / SLR	W-2
SOLDIER COURSE BRICK - TYPE A	INTERGRAL COLOR / SLR	W-3
BRICK BULNOSE/ ECONOMY UNIT - TYPE A	INTERGRAL COLOR / SLR	W-4
SPLIT FACE CMU	INTERGRAL COLOR / WATER REPELLENT / SLR	W-5
MORTAR	INTERGRAL COLOR / WATER REPELLENT / SLR	W-6
ALUMINUM SKYLIGHT FRAMING AND TRIM	FCTY	M-1
CONDUCTOR HEAD AND DOWNSPOUT	FCTY	M-2
BOLLARDS	PS-5	P-3

COLOR LIST

NOTES:

NO. 1 COLOR SELECTIONS FOR THIS PROJECT MAY BE NOTED IN DOOR AND HARDWARE SCHEDULE, INTERIOR FINISH SCHEDULE, EXTERIOR FINISH SCHEDULE, LOUVER SCHEDULE, PIPING SCHEDULE AND ON THE DRAWINGS BY THE LETTER-NUMBER COMBINATION IN THE MARK COLUMN OF THIS LIST
NO. 2 SOME COLOR SELECTIONS MAY BE MADE IN VARIOUS SPECIFICATION SECTIONS.
NO. 3 USE ONLY THE COLORS NOTED OR SCHEDULED. IF A COLOR SELECTION IS NOT MADE, REQUEST ONE FROM THE ARCHITECT.

MARK	MATERIAL	MANUFACTURER	COLOR
WALLS			
W-1	6" PRECAST COPING CAP AND SILLS	---	MATCH BRICK TYPE A
W-2	FIELD VENEER BRICK - TYPE B	BELDEN BRICK	NO. 503-505 SMOOTH
W-3	SOLDIER COURSE BRICK - TYPE A	BELDEN BRICK	DUTCH GRAY VELOUR
W-4	BRICK BULNOSE/ ECONOMY UNIT - TYPE A	BELDEN BRICK	DUTCH GRAY VELOUR
W-5	SPLIT FACE CMU	GRASELLI CONCRETE	CLIFFSIDE CRÈME
W-6	MORTAR	DAVIS COLOR	MATCH EXISTING BUILDING
OPENING			
O-1	OVERHEAD COILING DOORS AND FRAMES	OVERHEAD COILING DOOR	AS SPECIFIED
O-2	LOUVER	CONSTRUCTION SPECIALITIES	AS SPECIFIED
O-3	ROOF HATCH	BILCO	AS SPECIFIED
O-4	EXTERIOR DOORS AND FRAMES	CLINE	AS SPECIFIED
O-5	INTERIOR DOOR AND FRAME	CLINE	AS SPECIFIED
MISCELLANEOUS			
M-1	SKYLIGHT	KALWALL	AS
M-2	CONDUCTOR HEAD AND DOWNSPOUT	AS SPECIFIED	MATCH EXISTING BUILDING
M-3	RUBBER BASE	ROPPE	AS
PAINT			
P-1	NOT USED	TNEMEC	AS
P-2	INTERIOR WALLS AND CEILING	TNEMEC	AS
P-3	BOLLARDS	TNEMEC	SAFETY YELLOW
P-4	NOT USED	TNEMEC	AS
P-5	EXTERIOR CMU WALLS	TNEMEC	AS
P-6	INTERIOR CONCRETE FLOOR	TNEMEC	AS

DOOR TYPES:

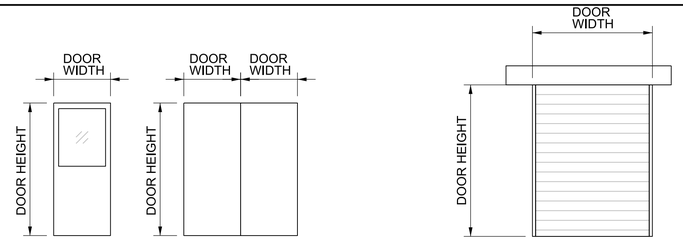

HG
HALF GLASS

DD
DOUBLE DOOR

OHC
OVERHEAD COILING DOOR

FRAME TYPES:

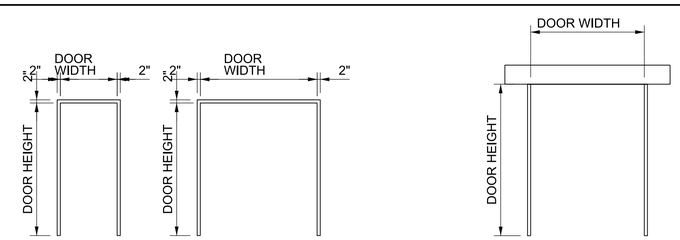

F-1
SINGLE DOOR

F-2
DOUBLE DOOR

F-3
OVERHEAD COILING DOOR

LOUVER TYPES

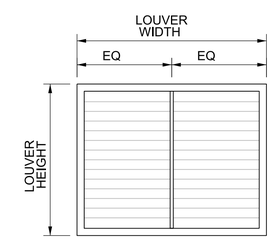

SL AND SPL
LOUVER

STATE OF ALABAMA
ADAM N. DOLSAK
6305
REGISTERED ARCHITECT

Adam N. Dolsak

NO.	DATE	REVISION	BY	APVD

DSGN W HOLLINGSWORTH | DR P DENNING | CHK A DOLSAK | APVD A DOLSAK

PAUL B. KREBS WATER TREATMENT PLANT
IMPROVEMENTS
ANNISTON WATER WORKS & SEWER BOARD
CITY OF ANNISTON, ALABAMA

Jacobs

ARCHITECTURAL
FINISHED WATER PUMP STATION
SCHEDULES

REUSE OF DOCUMENTS: THIS DOCUMENT, AND THE IDEAS AND DESIGNS INCORPORATED HEREIN, AS AN INSTRUMENT OF PROFESSIONAL SERVICE, IS THE PROPERTY OF JACOBS AND IS NOT TO BE USED, IN WHOLE OR IN PART, FOR ANY OTHER PROJECT WITHOUT THE WRITTEN AUTHORIZATION OF JACOBS.

BID DOCUMENTS

VERIFY SCALE
BAR IS ONE INCH ON ORIGINAL DRAWING.
0 1"

DATE	OCTOBER 2024
PROJ	D3698100
DWG	35-A-601
SHEET	43 of 145

©JACOBS 2024. ALL RIGHTS RESERVED.

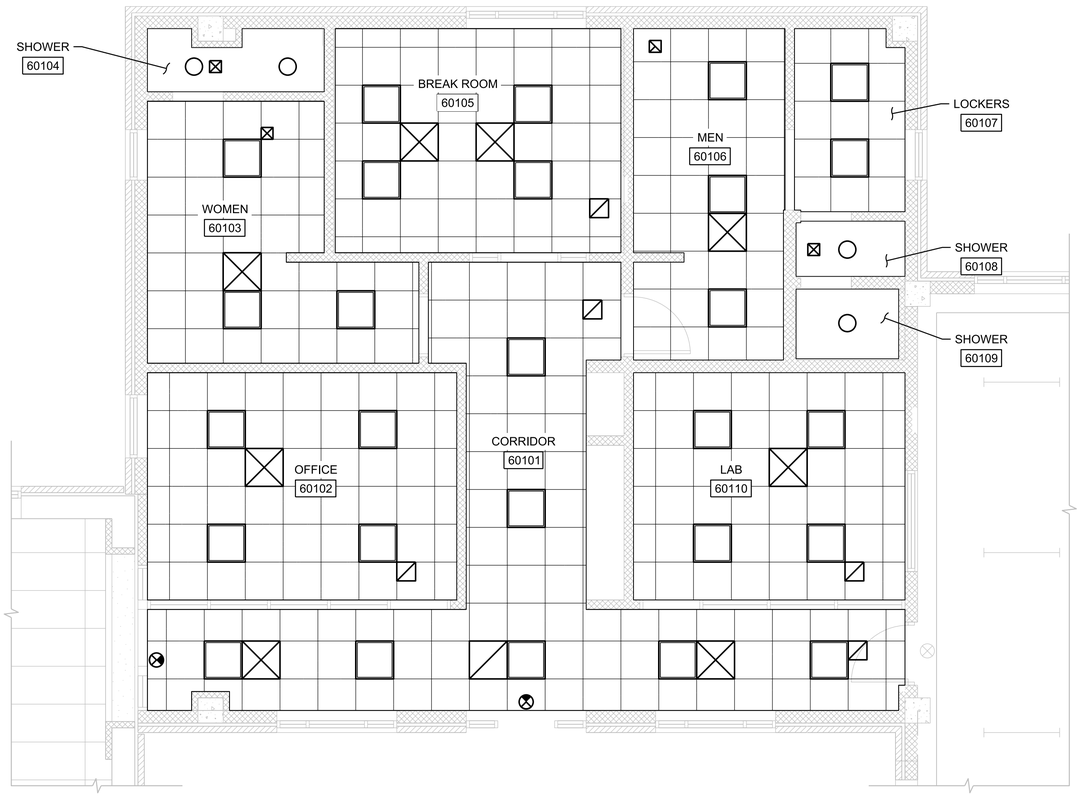

N

REFLECTED CEILING PLAN

1/4"=1'-0"

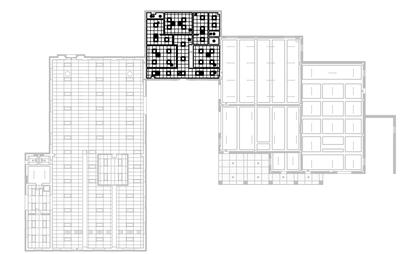

N

KEY PLAN

NTS

GENERAL SHEET NOTES

1. MATCH EXISTING CEILING HEIGHTS FOR NEW INSTALLATION.
2. CEILING TILES TO BE CENTERED BOTH WAYS IN EACH ROOM OR SPACE UNLESS DIMENSIONED OTHERWISE.
3. SEE ELECTRICAL DRAWINGS FOR LOCATIONS OF EXIT SIGNAGE.
4. ALL CEILING ELEMENTS TO BE PLACED IN THE CENTER OF CEILING TILE OR CENTER OF HARD CEILINGS AREAS U.N.O.
6. WHERE TRUSS SPACING IS GREATER THAN NECESSARY TO ACCOMMODATE ADEQUATE SUPPORT FOR CEILING GRID SYSTEM ATTACH TO UNDERSIDE OF DECK WITH CLIPS.

LEGEND

- NEW 2 X 2 LAY-IN ACOUSTICAL CEILING
- WATER RESISTANT DRYWALL, PAINTED
- NEW SUPPLY AIR DIFFUSER CONNECTED TO EXISTING DUCTWORK. BASIS OF DESIGN: TITUS; MODEL TMS
- NEW RETURN AIR DIFFUSER CONNECTED TO EXISTING DUCTWORK. BASIS OF DESIGN: TITUS; MODEL 350FL
- NEW EXHAUST GRILL CONNECTED TO EXISTING DUCTWORK
- NEW 2 X 2 FLUORESCENT LIGHT FIXTURE (LAY-IN)
- NEW RECESSED DOWN LIGHT FIXTURE
- NEW LIGHTED EXIT SIGN MOUNTED IN EXISTING LOCATION

STATE OF ALABAMA
ADAM N. DOLSAK
6305
REGISTERED ARCHITECT

Adam N. Dolsak

NO.	DATE	REVISION	BY	APVD

DSGN W HOLLINGSWORTH | DR P DENNING | CHK A DOLSAK | APVD A DOLSAK

PAUL B. KREBS WATER TREATMENT PLANT
IMPROVEMENTS
ANNISTON WATER WORKS & SEWER BOARD
CITY OF ANNISTON, ALABAMA

REUSE OF DOCUMENTS: THIS DOCUMENT, AND THE IDEAS AND DESIGNS INCORPORATED HEREIN, AS AN INSTRUMENT OF PROFESSIONAL SERVICE, IS THE PROPERTY OF JACOBS AND IS NOT TO BE USED, IN WHOLE OR IN PART, FOR ANY OTHER PROJECT WITHOUT THE WRITTEN AUTHORIZATION OF JACOBS.

Jacobs

ARCHITECTURAL

ADMINISTRATION BUILDING
REFLECTED CEILING PLAN

VERIFY SCALE
BAR IS ONE INCH ON ORIGINAL DRAWING.
0 1"

DATE	OCTOBER 2024
PROJ	D3698100
DWG	60-A-201
SHEET	44 of 145

BID DOCUMENTS

©JACOBS 2024. ALL RIGHTS RESERVED.

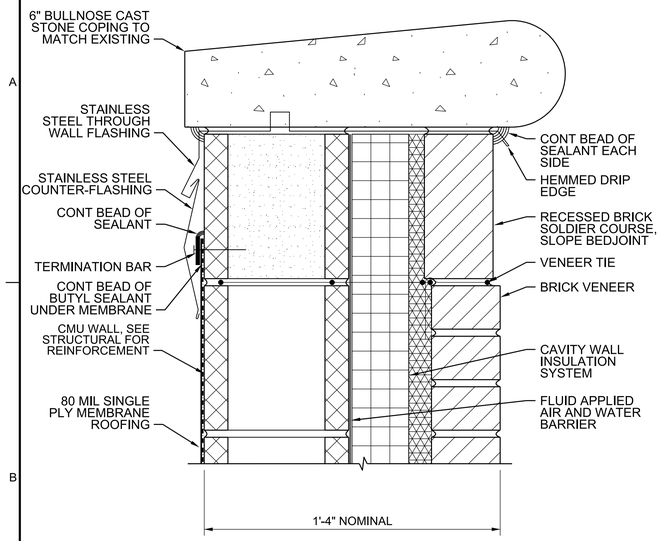

PARAPET COPING

NTS

0756-001

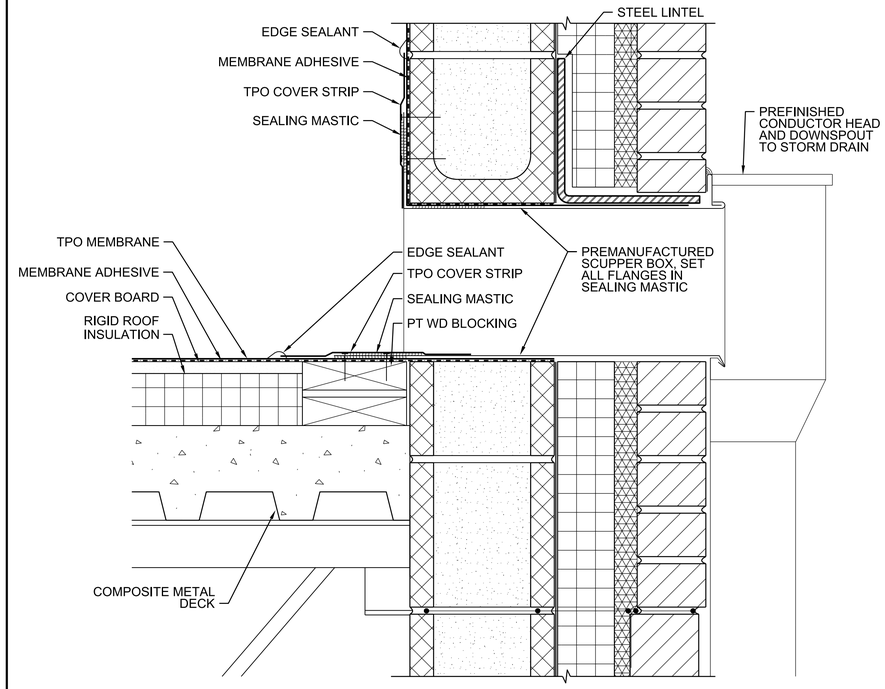

SCUPPER

NTS

0756-003

NOTE: LAP MEMBRANES AND BASE SHEETS AS REQUIRED BY MANUFACTURER, TYPICAL

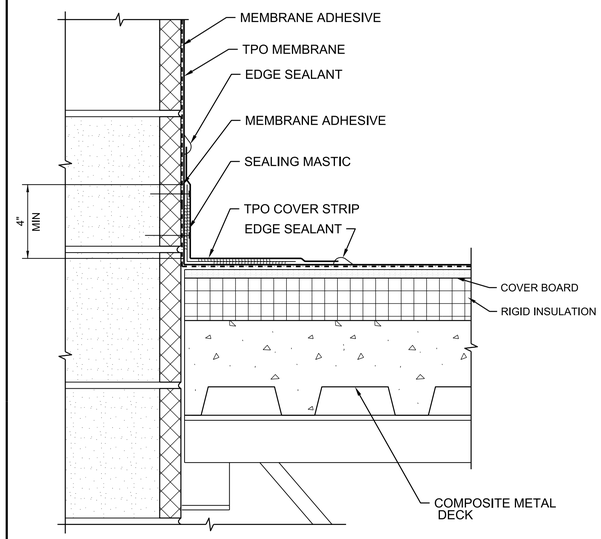

PARAPET FLASHING

NTS

0756-002

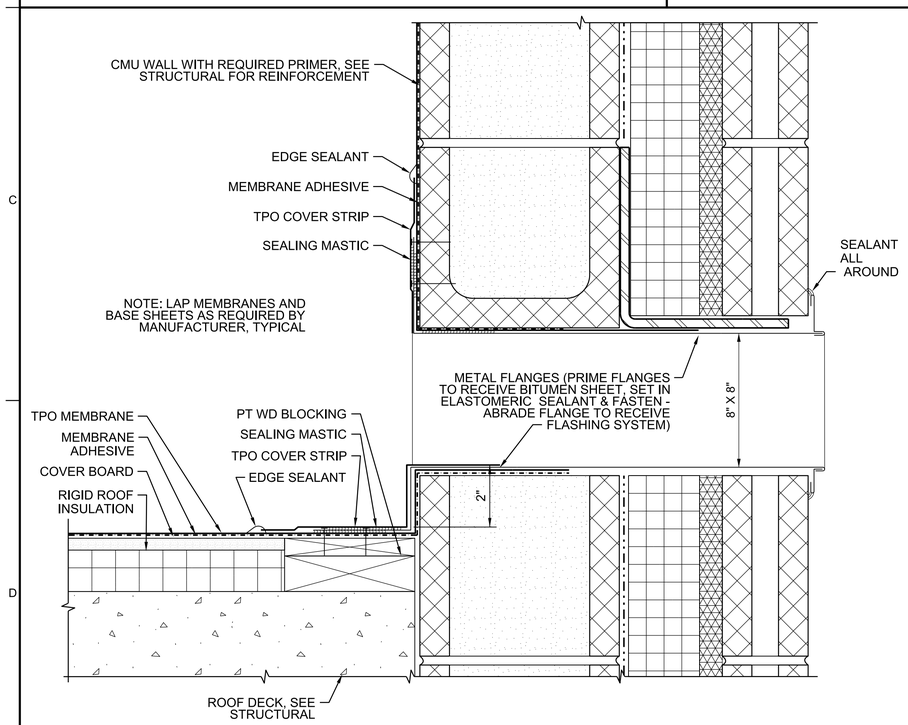

OVER FLOW SCUPPER

NTS

0756-003

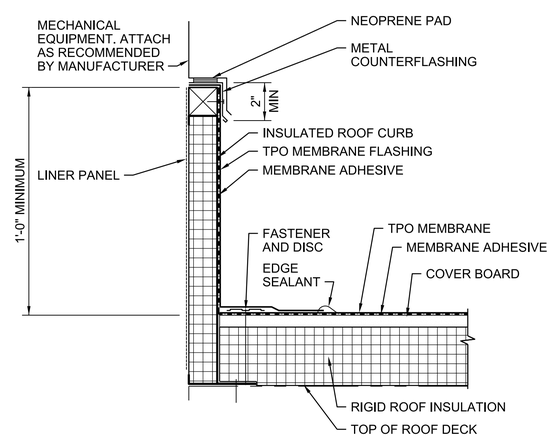

EQUIPMENT CURB

NTS

0756-004

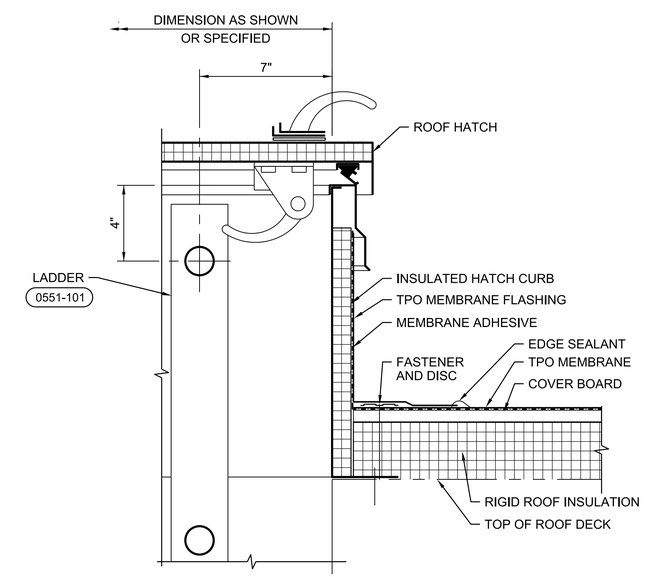

ROOF HATCH

NTS

0756-005

STATE OF ALABAMA
ADAM N. DOLSAK
6305
REGISTERED ARCHITECT

Adam N. Dolsak

Digitally signed by Adam N. Dolsak
DN: cn=Adam N. Dolsak, O=Jacobs Solutions Inc., L=Dallas, S=Texas, C=US
OID.2.5.4.97=NTRUS-0E-6855555F
Date: 2024.10.28 14:44:40-05'00'

NO.	DATE	REVISION	BY	APVD

DSGN W HOLLINGSWORTH | DR P DENNING | CHK A DOLSAK | APVD A DOLSAK

PAUL B. KREBS WATER TREATMENT PLANT
IMPROVEMENTS
ANNISTON WATER WORKS & SEWER BOARD
CITY OF ANNISTON, ALABAMA

Jacobs

ARCHITECTURAL

STANDARD DETAILS

REUSE OF DOCUMENTS: THIS DOCUMENT, AND THE IDEAS AND DESIGNS INCORPORATED HEREIN, AS AN INSTRUMENT OF PROFESSIONAL SERVICE, IS THE PROPERTY OF JACOBS AND IS NOT TO BE USED, IN WHOLE OR IN PART, FOR ANY OTHER PROJECT WITHOUT THE WRITTEN AUTHORIZATION OF JACOBS.

VERIFY SCALE
BAR IS ONE INCH ON ORIGINAL DRAWING.
0 1"

DATE	OCTOBER 2024
PROJ	D3698100
DWG	99-A-501
SHEET	45 of 145

BID DOCUMENTS

©JACOBS 2024. ALL RIGHTS RESERVED.

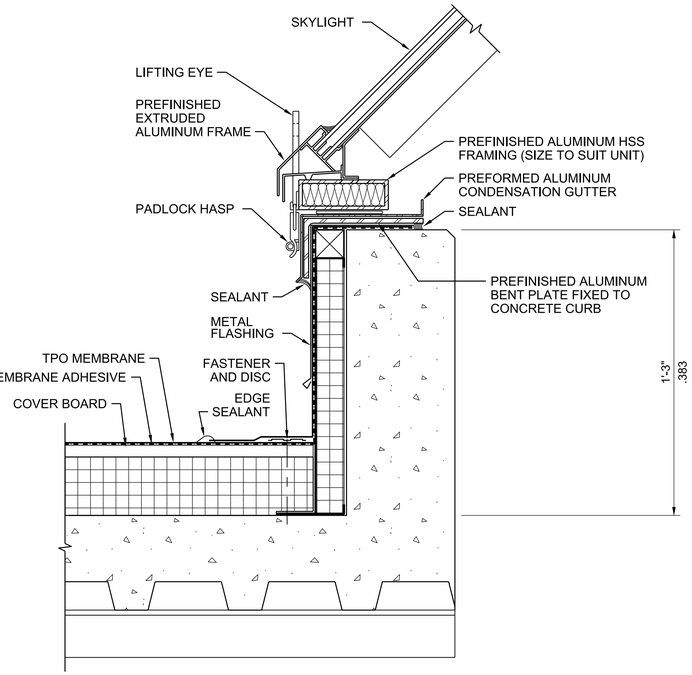

REMOVABLE SKYLIGHT ON 6" CONCRETE CURB

3"=1'-0"

0756-006

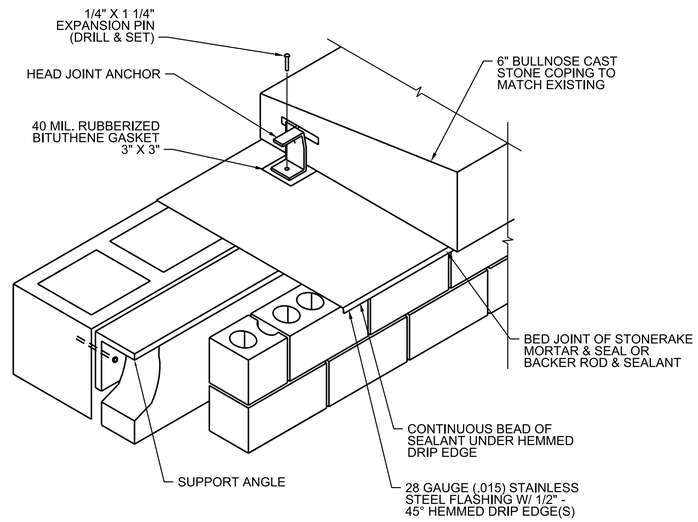

PARPET FLASHING DETAIL

NTS

0756-007

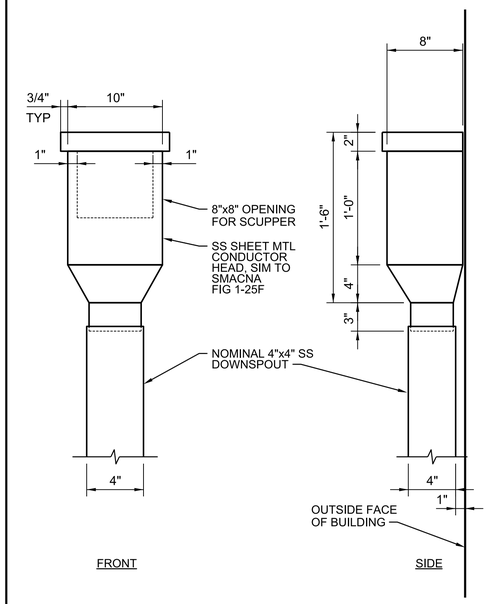

SCUPPER HEAD

NTS

0756-008

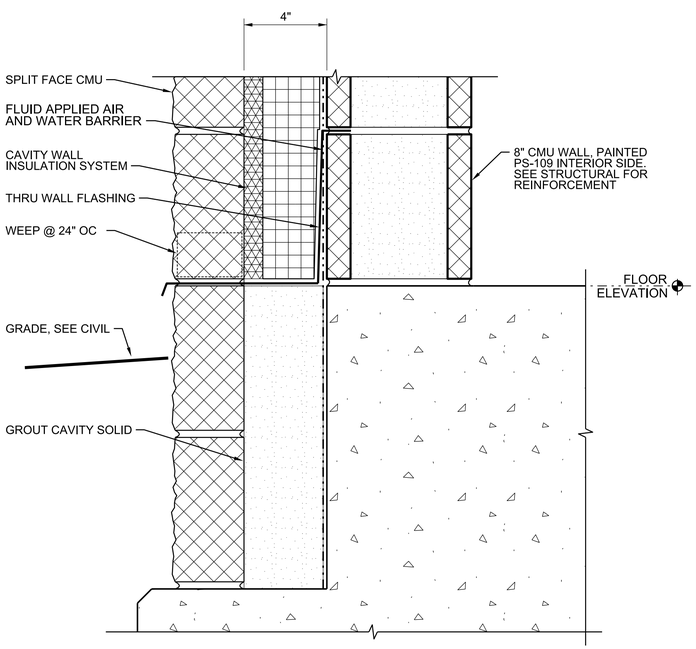

TYPICAL BUILDING WALL BASE

3"=1'-0"

0741-007

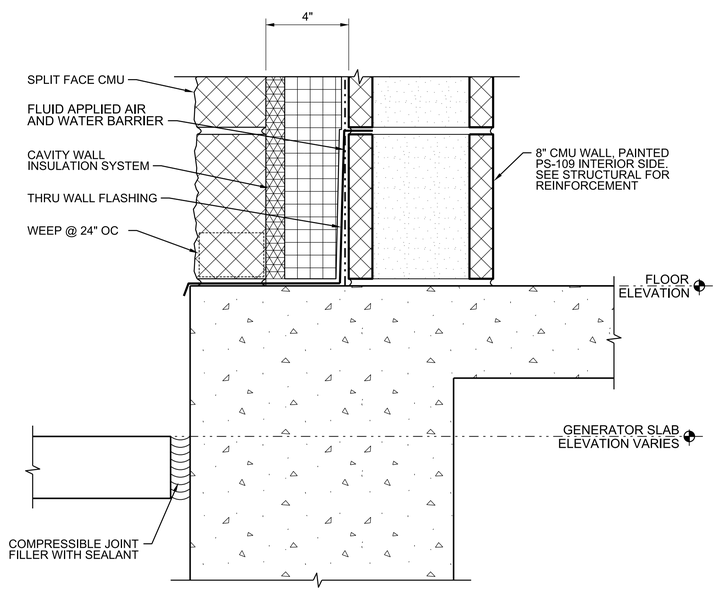

BUILDING WALL BASE AT GENERATOR AREA

3"=1'-0"

0741-008

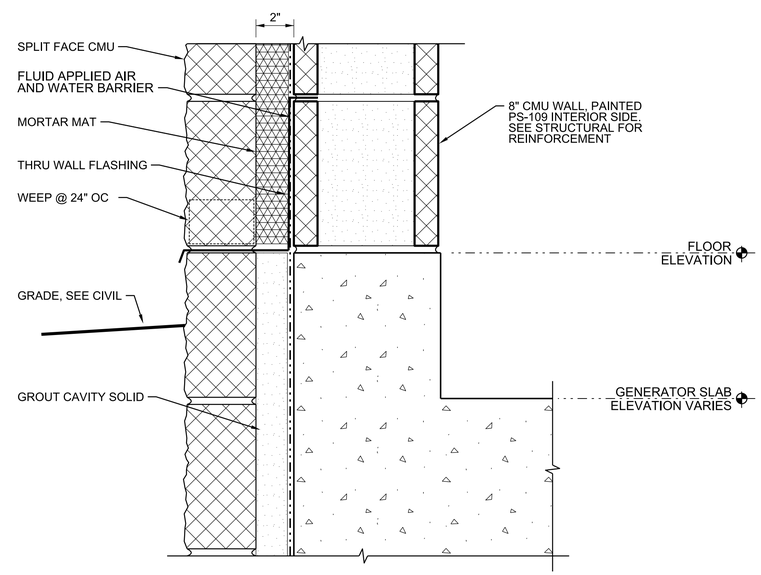

SCREENWALL BASE AT GENERATOR AREA

3"=1'-0"

0741-009

STATE OF ALABAMA
ADAM N. DOLSAK
6305
REGISTERED ARCHITECT

Adam N. Dolsak

NO.	DATE	REVISION	BY	APVD

DSGN W HOLLINGSWORTH | DR | CHK P DENNING | APVD A DOLSAK | APVD A DOLSAK

PAUL B. KREBS WATER TREATMENT PLANT
IMPROVEMENTS
ANNISTON WATER WORKS & SEWER BOARD
CITY OF ANNISTON, ALABAMA

Jacobs

ARCHITECTURAL

STANDARD DETAILS

REUSE OF DOCUMENTS: THIS DOCUMENT, AND THE IDEAS AND DESIGNS INCORPORATED HEREIN, AS AN INSTRUMENT OF PROFESSIONAL SERVICE, IS THE PROPERTY OF JACOBS AND IS NOT TO BE USED, IN WHOLE OR IN PART, FOR ANY OTHER PROJECT WITHOUT THE WRITTEN AUTHORIZATION OF JACOBS.

VERIFY SCALE
BAR IS ONE INCH ON ORIGINAL DRAWING.
0 1"

DATE	OCTOBER 2024
PROJ	D3698100
DWG	99-A-502
SHEET	46 of 145

BID DOCUMENTS

FILENAME: 99-A-502_D3689100.dgn PLOT DATE: 10/22/2024 PLOT TIME: 12:52:17 PM

©JACOBS 2024. ALL RIGHTS RESERVED.

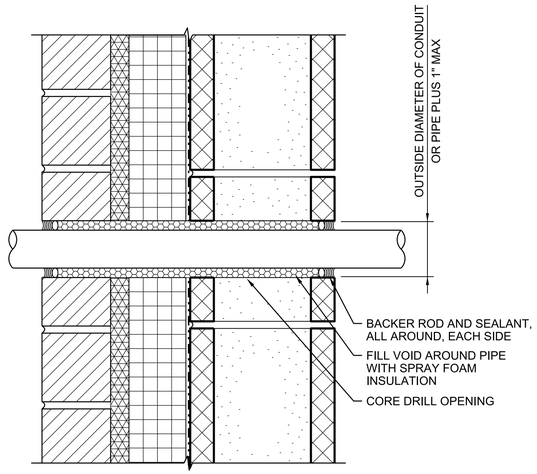

PIPE PENETRATION

NTS

0741-010

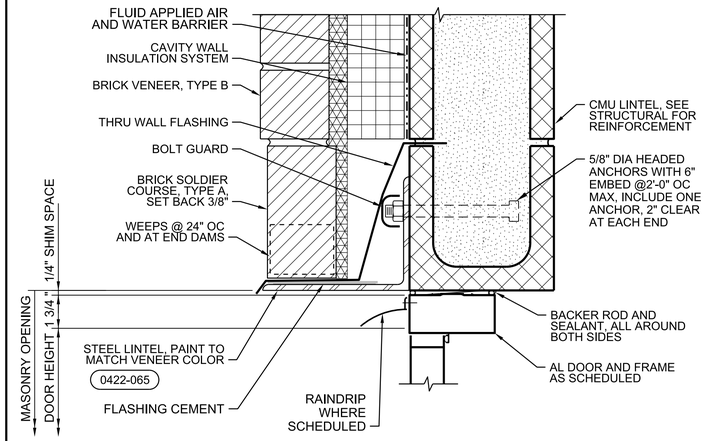

EXTERIOR DOOR HEAD

NTS

0841-004

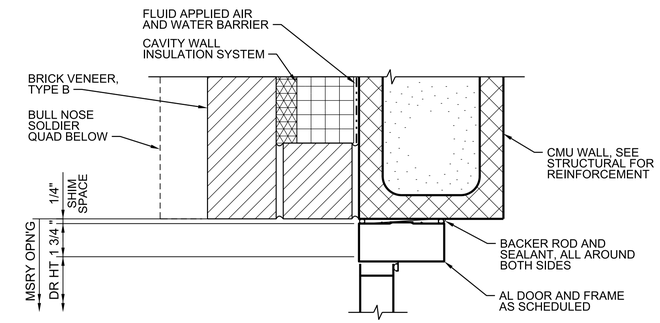

EXTERIOR DOOR JAMB

NTS

0841-005

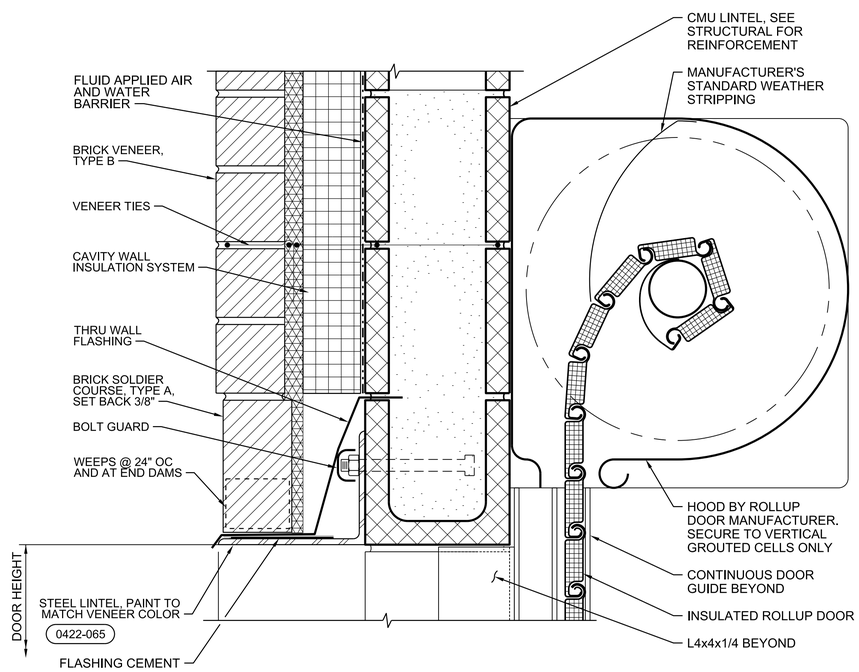

ROLL UP DOOR HEAD

NTS

0833-001

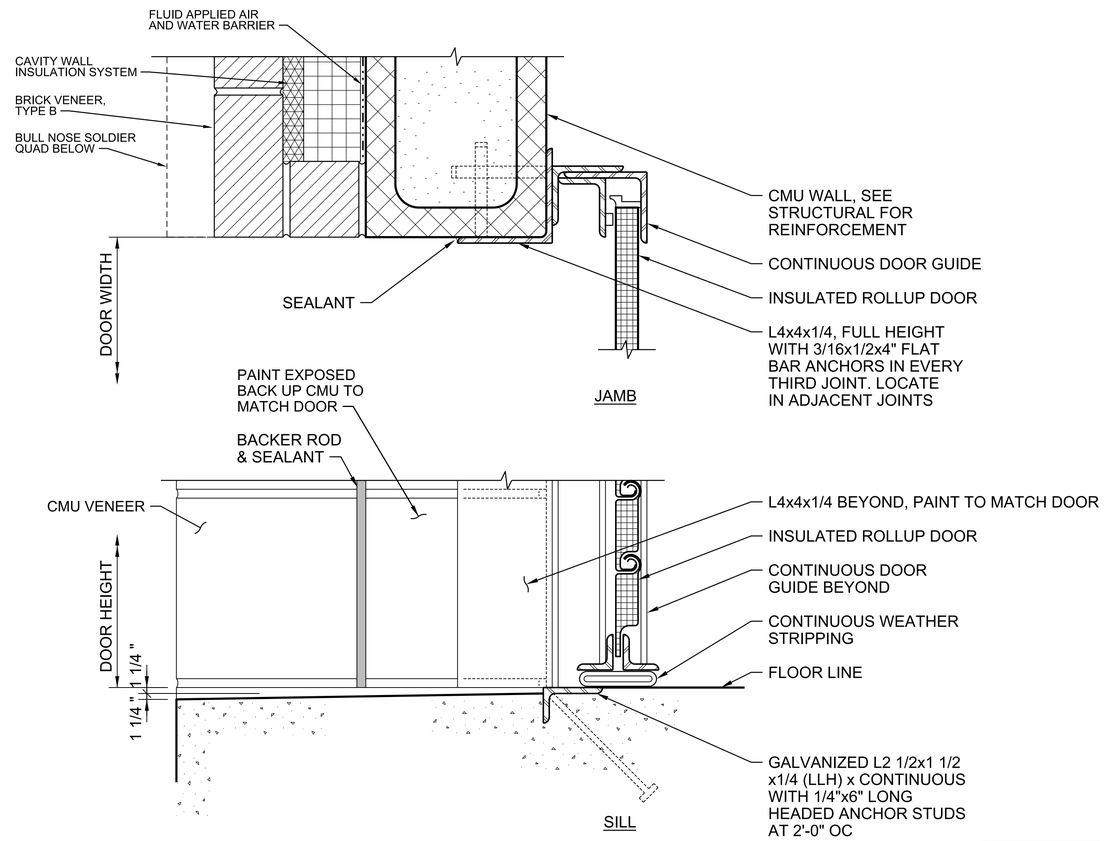

ROLL-UP DOOR JAMB & SILL

3"=1'-0"

0833-002

STATE OF ALABAMA
ADAM N. DOLSAK
6305
REGISTERED ARCHITECT

Adam N. Dolsak

NO.	DATE	REVISION	BY	APVD

DSGN W HOLLINGSWORTH | DR P DENNING | CHK A DOLSAK | APVD A DOLSAK

PAUL B. KREBS WATER TREATMENT PLANT IMPROVEMENTS
ANNISTON WATER WORKS & SEWER BOARD
CITY OF ANNISTON, ALABAMA

Jacobs

ARCHITECTURAL

STANDARD DETAILS

REUSE OF DOCUMENTS: THIS DOCUMENT, AND THE IDEAS AND DESIGNS INCORPORATED HEREIN, AS AN INSTRUMENT OF PROFESSIONAL SERVICE, IS THE PROPERTY OF JACOBS AND IS NOT TO BE USED, IN WHOLE OR IN PART, FOR ANY OTHER PROJECT WITHOUT THE WRITTEN AUTHORIZATION OF JACOBS.

VERIFY SCALE
BAR IS ONE INCH ON ORIGINAL DRAWING.
0 1"

DATE	OCTOBER 2024
PROJ	D3698100
DWG	99-A-503
SHEET	47 of 145

BID DOCUMENTS

©JACOBS 2024. ALL RIGHTS RESERVED.

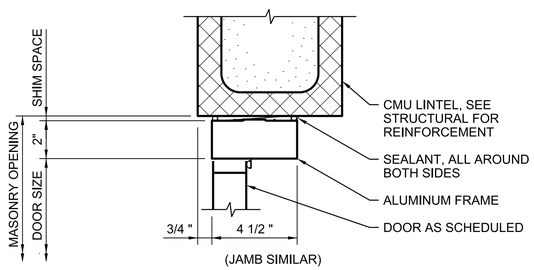

INTERIOR DOOR HEAD AND JAMB

NTS

0841-006

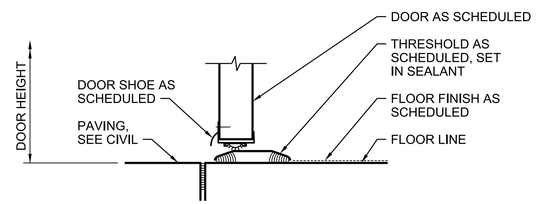

EXTERIOR DOOR SILL

NTS

0871-001

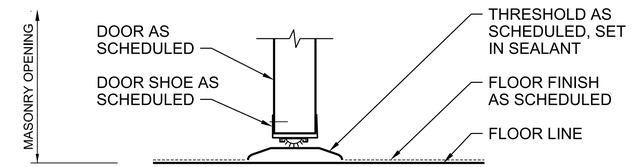

INTERIOR DOOR SILL

NTS

0871-002

NOTE:

STOP BENT PLATE 1/2" FROM CMU AT JAMBS.

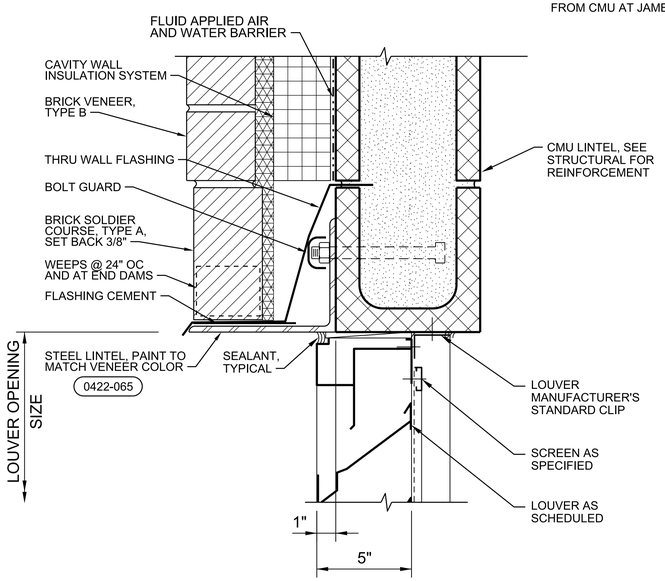

LOUVER HEAD

3"=1'-0"

0890-001

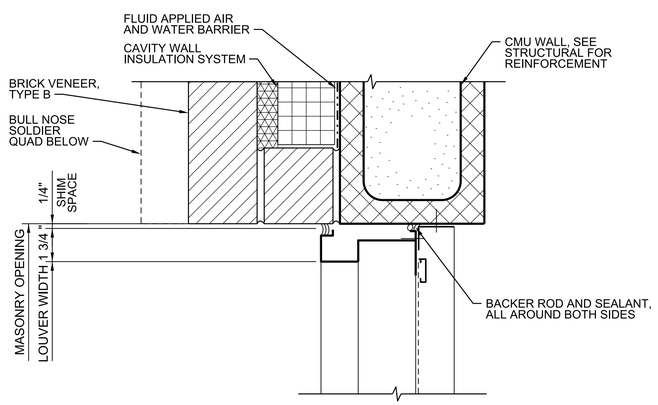

LOUVER JAMB

3"=1'-0"

0890-002

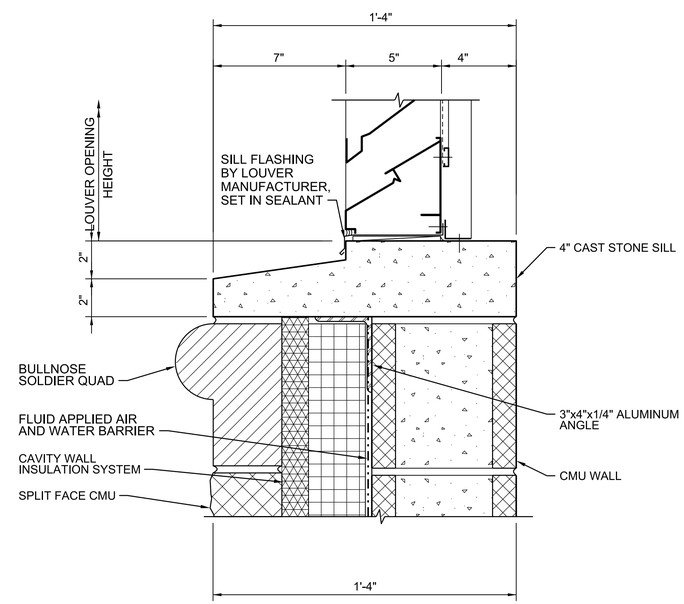

LOUVER SILL

3"=1'-0"

0890-003

STATE OF ALABAMA
ADAM N. DOLSAK
6305
REGISTERED ARCHITECT

Adam N. Dolsak

Digitally signed by Adam N. Dolsak
DN: C=US, O=Jacobs, OU=Jacobs Solutions Inc., L=Dallas, S=Texas, CN=A.N.DOLSAK
Date: 2024.10.28 14:50:22-04'00'

NO.	DATE	REVISION	BY	APVD

DSGN W HOLLINGSWORTH | DR P DENNING | CHK A DOLSAK | APVD A DOLSAK

PAUL B. KREBS WATER TREATMENT PLANT IMPROVEMENTS

ANNISTON WATER WORKS & SEWER BOARD

CITY OF ANNISTON, ALABAMA

Jacobs

ARCHITECTURAL

STANDARD DETAILS

REUSE OF DOCUMENTS: THIS DOCUMENT, AND THE IDEAS AND DESIGNS INCORPORATED HEREIN, AS AN INSTRUMENT OF PROFESSIONAL SERVICE, IS THE PROPERTY OF JACOBS AND IS NOT TO BE USED, IN WHOLE OR IN PART, FOR ANY OTHER PROJECT WITHOUT THE WRITTEN AUTHORIZATION OF JACOBS.

VERIFY SCALE

BAR IS ONE INCH ON ORIGINAL DRAWING.
0 1"

DATE	OCTOBER 2024
PROJ	D3698100
DWG	99-A-504
SHEET	48 of 145

BID DOCUMENTS

©JACOBS 2024. ALL RIGHTS RESERVED.

DANGER SIGN DETAIL

NTS

1014-001

CAUTION SIGN DETAIL

NTS

1014-002

WARNING SIGN DETAIL

NTS

1014-003

NOTICE SIGN DETAIL

3"=1'-0"

1014-008

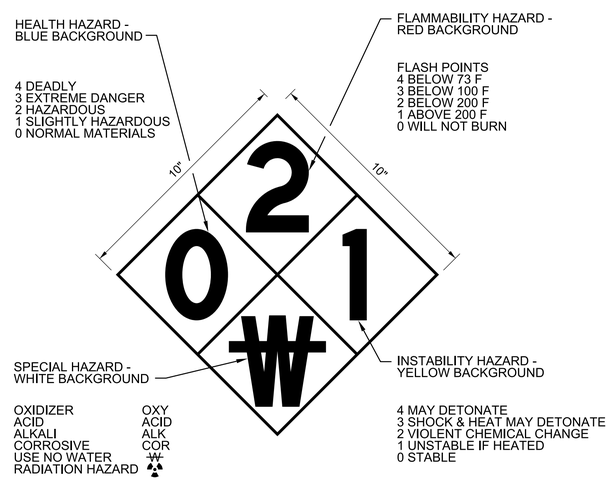

NOTES:
1. LETTER HEIGHT: 4"
   LETTER COLOR: BLACK
2. NUMBERS AND LETTERS ON ABOVE SIGNAL DETAIL ARE EXAMPLES ONLY. SEE SPECIFICATION XX XX XX FOR REQUIREMENTS ON THIS PROJECT.

HAZARDOUS MATERIAL SIGN DETAIL

3"=1'-0"

1014-006

STATE OF ALABAMA
ADAM N. DOLSAK
6305
REGISTERED ARCHITECT

Adam N. Dolsak

NO.	DATE	REVISION	BY	APVD

DSGN W HOLLINGSWORTH | DR P DENNING | CHK A DOLSAK | APVD A DOLSAK

PAUL B. KREBS WATER TREATMENT PLANT
IMPROVEMENTS
ANNISTON WATER WORKS & SEWER BOARD
CITY OF ANNISTON, ALABAMA

Jacobs

ARCHITECTURAL

STANDARD DETAILS

REUSE OF DOCUMENTS: THIS DOCUMENT, AND THE IDEAS AND DESIGNS INCORPORATED HEREIN, AS AN INSTRUMENT OF PROFESSIONAL SERVICE, IS THE PROPERTY OF JACOBS AND IS NOT TO BE USED, IN WHOLE OR IN PART, FOR ANY OTHER PROJECT WITHOUT THE WRITTEN AUTHORIZATION OF JACOBS.

VERIFY SCALE
BAR IS ONE INCH ON ORIGINAL DRAWING.
0 1"

DATE	OCTOBER 2024
PROJ	D3698100
DWG	99-A-505
SHEET	49 of 145

BID DOCUMENTS

©JACOBS 2024. ALL RIGHTS RESERVED.

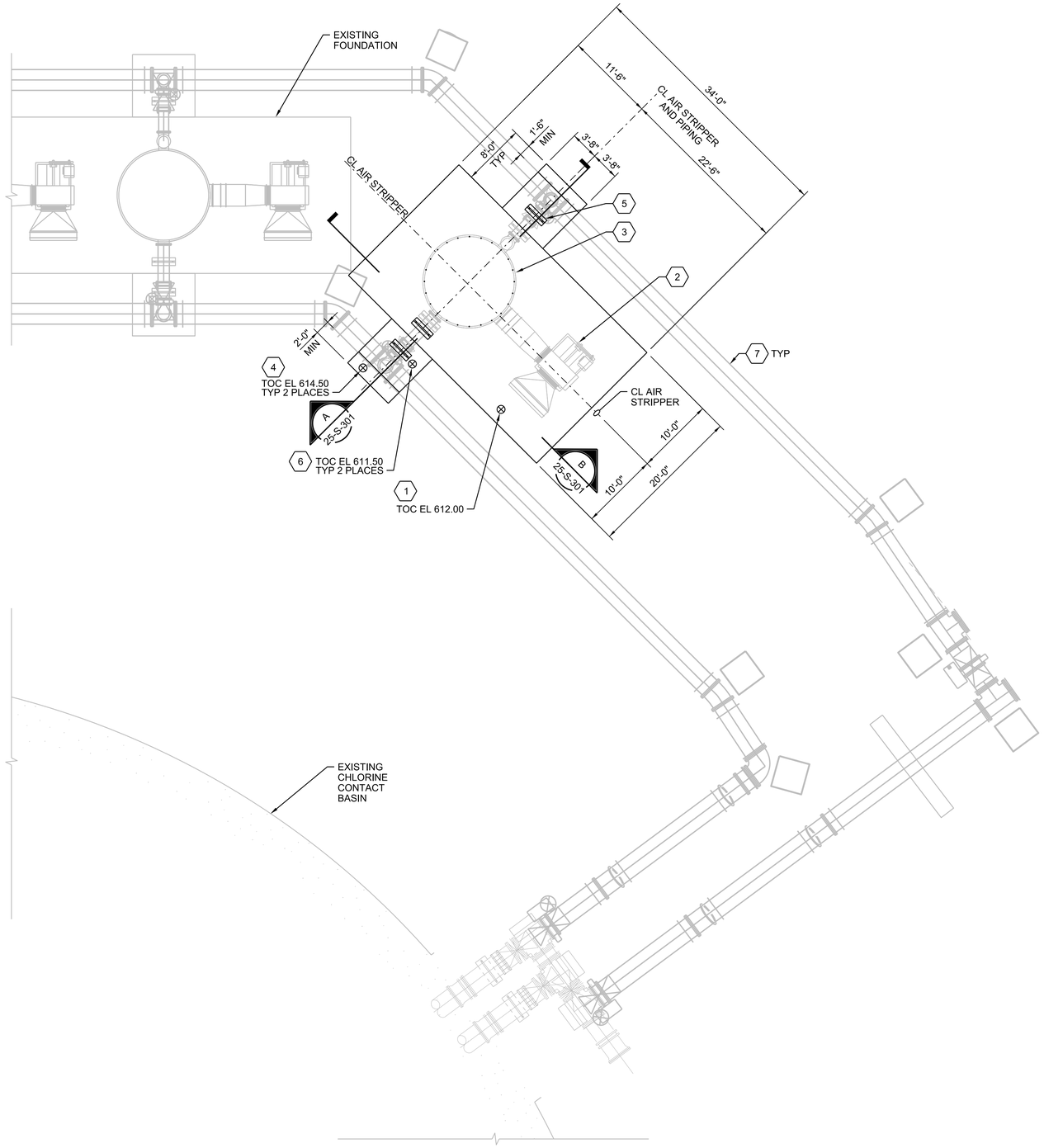

N

FOUNDATION PLAN

1/8"=1'-0"

GENERAL NOTES

1. FOR DESIGN CRITERIA AND ADDITONAL INFORMATION, SEE STRUCTURAL GENERAL NOTES DRAWINGS.
2. FOR STANDARD DETAILS SEE 99-S-SERIES DRAWINGS.
3. VERIFY AND/OR COORDINATE FINAL DIMENSIONS, GEOMETRY, ELEVATIONS AND LOCATION OF ALL EQPT WITH PROCESS DRAWINGS AND EQPT SUPPLIER(S), AND APPROVED EQPT SUBMITTALS PRIOR TO STARTING WORK. NOTIFY ENGINEER IF CONDITIONS VARY FROM THAT SHOWN PRIOR TO STARTING WORK.
4. FIELD VERIFY AND COORDINATE DIMENSIONS, GEOMETRY, AND ELEVATIONS OF AS-BUILT CONSTRUCTION PRIOR TO FABRICATING ELEMENTS OF NEW CONSTRUCTION. COORDINATE NEW CONSTRUCTION TO FACILITATE AS-BUILT CONSTRUCTION. NOTIFY ENGINEER IF CONDITIONS VARY FROM THAT SHOWN PRIOR TO STARTING WORK.
5. ALL FORCES ARE SERVICE LEVEL, UON.

SHEET KEYNOTES

1. MIN 24" REINF GRADE SLAB. SEE DWG 25-S-301 FOR ADDITIONAL INFORMATION.
2. BLOWER. ASSUMED FOUNDATION DESIGN CRITERIA BASED ON PRELIMINARY DESIGN INFORMATION FROM MONROE ENVIRONMENTAL. ANCHORAGE INFO FOR BID ONLY. FINAL ANCHORAGE DESIGN BY EQPT SUPPLIER:
   - 1755 LBS SHIPPING WEIGHT
   - ANCHORAGE = (6) - 3/4" DIA F1554 GR 36 ANCHOR BOLTS. 10" EMBED INTO CONC.
3. AIR STRIPPER. ASSUMED FOUNDATION DESIGN CRITERIA BASED ON PRELIMINARY DESIGN INFORMATION FROM MONROE ENVIRONMENTAL. ANCHORAGE INFO FOR BID ONLY. FINAL ANCHORAGE DESIGN BY EQPT SUPPLIER:
   - 25000 LBS SHIPPING WEIGHT
   - 45000 OPERATING WEIGHT
   - SIZE = 11'-6" DIA x 40'-0" HEIGHT
   - ANCHORAGE = (24) - 3/4" DIA F1554 GR 36 ANCHOR BOLTS ON 140" ANCHOR BOLT CIRCLE. 10" EMBED INTO CONC.
4. CONCRETE THRUST BLOCK. THRUST DESIGN LOAD = 9.1 KIPS BASED ON 35 PSI DESIGN PRESSURE.
5. CONCRETE SADDLE PIPE SUPPORT TYPE 'A' - DETAIL 0330-061.
6. MIN 16" REINF GRADE SLAB. SEE DWG 25-S-301 FOR ADDITIONAL INFORMATION.
7. EXISTING PIPING BELOW GRADE. APPROXIMATE CENTERLINE OF PIPE ELEVATION BETWEEN 606.50 AND 604.50. FIELD VERIFY PIPE DIAMETER AND PIPE CENTERLINE LOCATION. NOTIFY ENGINEER OF FIELD MEASUREMENTS PRIOR TO STARTING WORK.

ALABAMA LICENSED No. 29827 PROFESSIONAL ENGINEER GARRICK DONNELL PETTY

Digitally signed by Garrick D Petty Petty
Date: 2024.10.29 14:42:57 -04'00'
Garrick D Petty Petty

NO.	DATE	REVISION	BY	APVD

DSGN	DR	CHK	APVD
G PETTY	B CLEGG	D EVERSON	G PETTY

PAUL B. KREBS WATER TREATMENT PLANT
IMPROVEMENTS
ANNISTON WATER WORKS & SEWER BOARD
CITY OF ANNISTON, ALABAMA

Jacobs

STRUCTURAL
AIR STRIPPING TOWER
FOUNDATION PLAN

REUSE OF DOCUMENTS: THIS DOCUMENT, AND THE IDEAS AND DESIGNS INCORPORATED HEREIN, AS AN INSTRUMENT OF PROFESSIONAL SERVICE, IS THE PROPERTY OF JACOBS AND IS NOT TO BE USED, IN WHOLE OR IN PART, FOR ANY OTHER PROJECT WITHOUT THE WRITTEN AUTHORIZATION OF JACOBS.

BID DOCUMENTS

VERIFY SCALE
BAR IS ONE INCH ON ORIGINAL DRAWING.
0 1"

DATE	OCTOBER 2024
PROJ	D3698100
DWG	25-S-201
SHEET	50 of 145

©JACOBS 2024. ALL RIGHTS RESERVED.

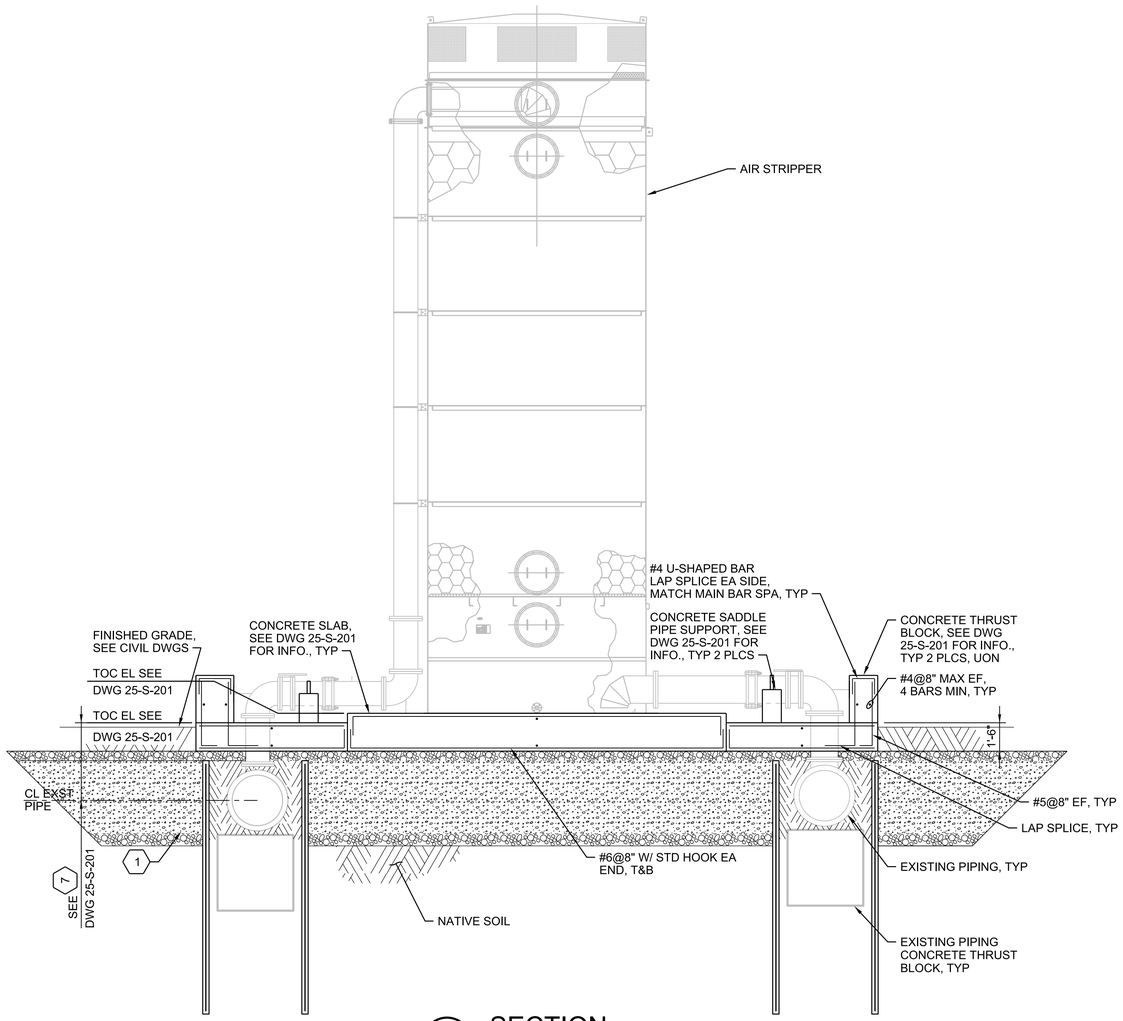

A SECTION
1/4" = 1'-0"
25-S-201

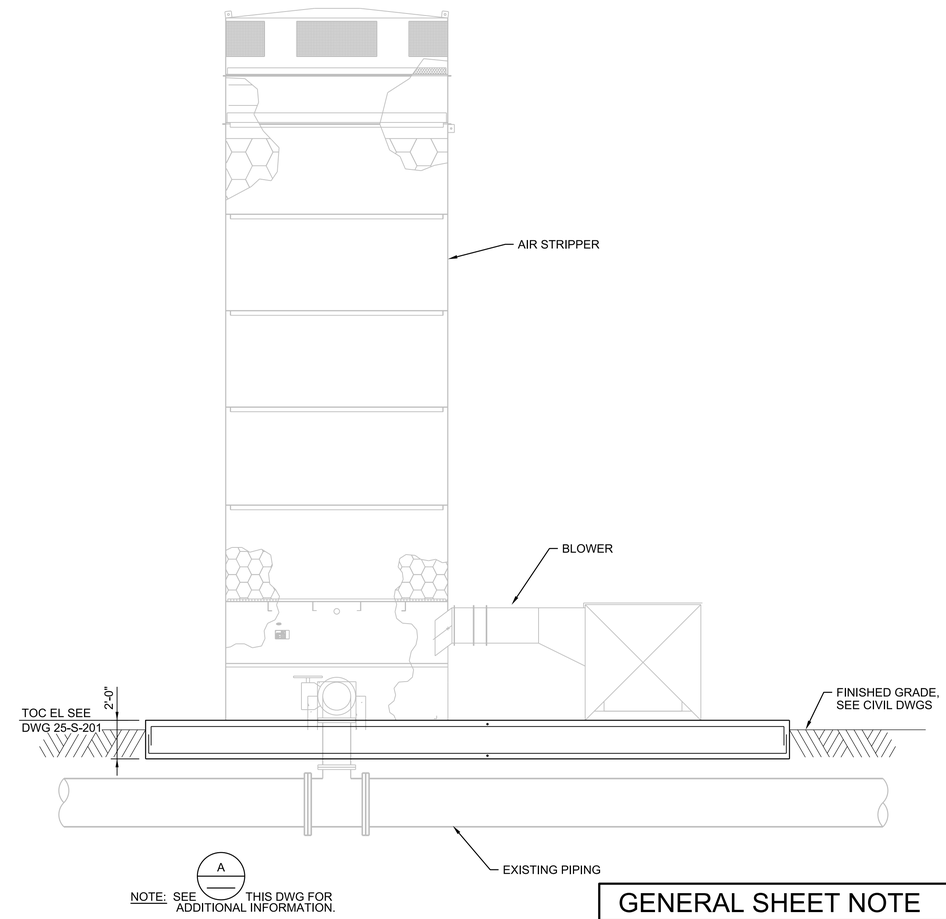

B SECTION
1/4" = 1'-0"
25-S-201

GENERAL SHEET NOTE

1. SUBGRADE PREPARATION SHALL BE AS FOLLOWS AND IN ACCORDANCE WITH THE PROJECT'S GEOTECHNICAL REPORT AND GEOTECTNICAL ENGINEER RECOMMENDATIONS. COORDINATE SUBGRADE WORK WITH LOCATION OF EXISTING PIPING AND EXISTING BELOW GRADE PIPE SUPPORTS.
   - PROVIDE SHORING EACH SIDE OF EXISTING PIPE AND THRUST BLOCK TO PROTECT EXISTING SUBGRADE.
   - UNDERCUT A MINIMUM OF 5 FEET BELOW THE BOTTOM FOUNDATION ELEVATION AND 5 FEET BEYOND FOUNDATION PERIMETER.
   -GEOTECHNICAL ENGINEER TO VERIFY EXCAVATED SURFACE PRIOR TO ADDITIONAL WORK.
   - PLACE GEOGRID (E.G., TENSAR TX 160X OR ALTERNATE APPROVED BY GEOTECHNICAL ENGINEER) AT BASE OF EXCAVATION. BREAK GEOGRID AT EXISTING PIPE AND/ OR THRUST BLOCK.
   - PLACE 12" MIN COMPACTED CRUSHED STONE (E.G., ALDOT NO. 825 TYPE 'B') ON GEOGRID.
   - PLACE STRUCTURAL FILL OR CRUSHED STONE IN 8" COMPACTED LIFTS.
   - PLACE 6" CRUSHED STONE AT BASE OF NEW FOUNDATIONS.

ALABAMA LICENSED No. 29827 PROFESSIONAL ENGINEER GARRICK DONNELL PETTY

Digitally signed by Garrick D Petty Petty
Date: 2024.10.29 14:08:05 -04'00'

NO.	DATE	REVISION	BY	APVD

DSGN	DR	CHK	APVD
G PETTY	G PETTY	B CLEGG	D EVERSON

G PETTY

PAUL B. KREBS WATER TREATMENT PLANT
IMPROVEMENTS
ANNISTON WATER WORKS & SEWER BOARD
CITY OF ANNISTON, ALABAMA

Jacobs

STRUCTURAL
AIR STRIPPING TOWER SECTIONS

REUSE OF DOCUMENTS: THIS DOCUMENT, AND THE IDEAS AND DESIGNS INCORPORATED HEREIN, AS AN INSTRUMENT OF PROFESSIONAL SERVICE, IS THE PROPERTY OF JACOBS AND IS NOT TO BE USED, IN WHOLE OR IN PART, FOR ANY OTHER PROJECT WITHOUT THE WRITTEN AUTHORIZATION OF JACOBS.

VERIFY SCALE
BAR IS ONE INCH ON ORIGINAL DRAWING.
0 1"

DATE	OCTOBER 2024
PROJ	D3698100
DWG	25-S-301
SHEET	51 of 145

BID DOCUMENTS

FILENAME: ANSI_D_D3698100.dgn PLOT DATE: 10/22/2024 PLOT TIME: 12:57:01 PM

©JACOBS 2024. ALL RIGHTS RESERVED.

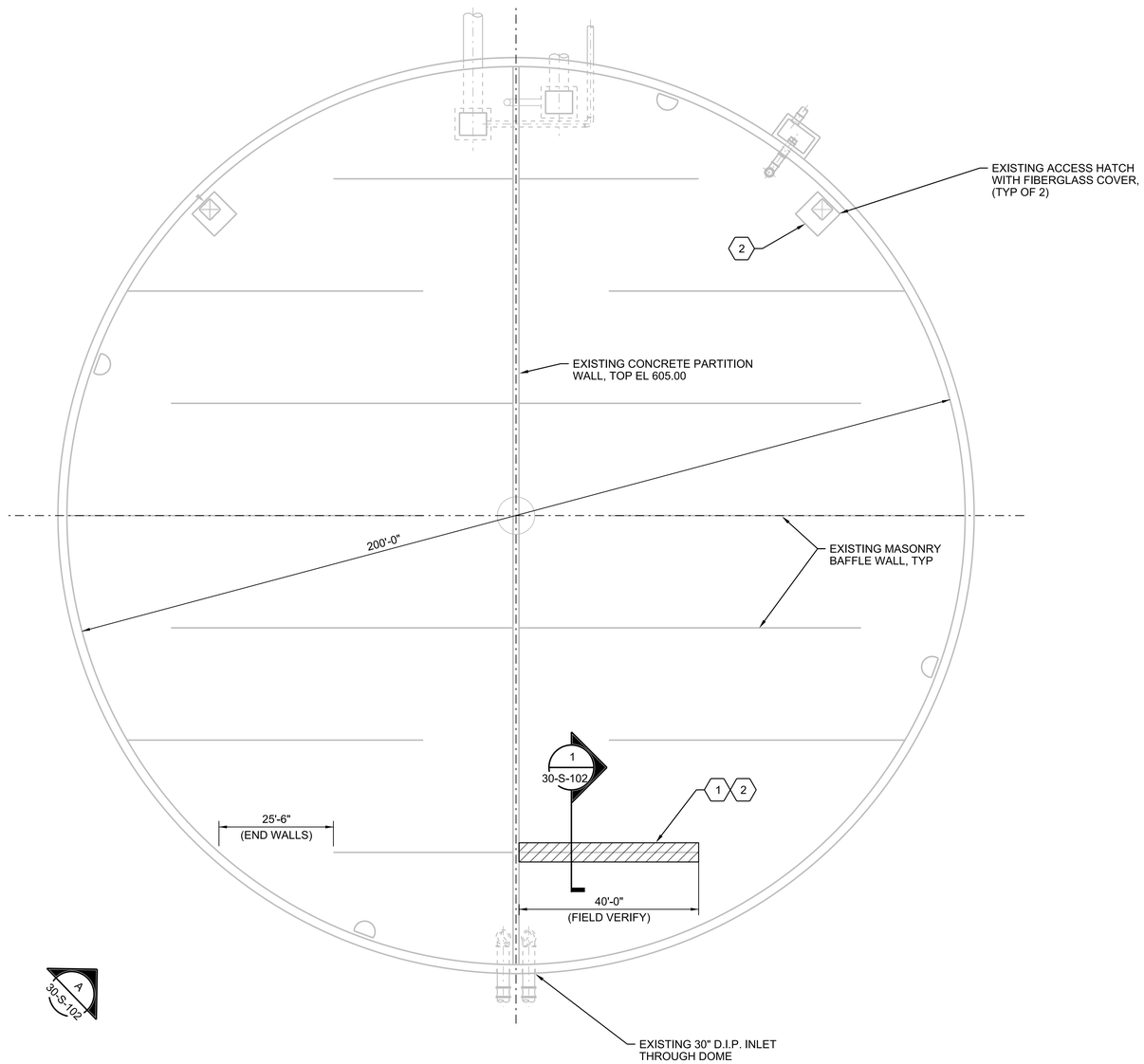

UPPER AND LOWER PLAN

1/16"=1'-0"

GENERAL NOTES

1. FOR DESIGN CRITERIA AND ADDITIONAL INFORMATION SEE STRUCTURAL GENERAL NOTES DRAWINGS.
2. EXISTING BASIN INFORMATION SHOWN IS BASED ON THE 1997 "PAUL B. KREBS WATER TREATMENT PLANT ADDITIONS AND IMPROVEMENT" DRAWINGS (PROJECT NO. 91028) PREPARED BY PAUL B. KREBS & ASSOCIATES, INC. ARCHITECTS / ENGINEERS. FIELD VERIFY DIMENSIONS, GEOMETRY, AND ELEVATIONS OF AS-BUILT CONSTRUCTION PRIOR TO FABRICATING ELEMENTS OF NEW CONSTRUCTION.

SHEET KEYNOTES

1. DEMOLISH ENTIRE EXISTING MASONRY BAFFLE WALL DOWN TO TOP OF EXISTING BASIN BASE SLAB AND OVER TO EXISTING CONCRETE PARTITION WALL.
2. REMOVE DEMOLISHED MATERIAL THROUGH EXISTING BASIN ROOF HATCH. DO NOT ENLARGE EXISTING OPENING OR ADD NEW ROOF OPENING(S).

ALABAMA LICENSED No. 29827 PROFESSIONAL ENGINEER GARRICK DONNELL PETTY

Digitally signed by Garrick D Petty Petty
Date: 2024.10.29 14:08:04 -04'00'

NO.	DATE	REVISION	BY	APVD

DSGN	DR	CHK	APVD
G PETTY	G PETTY	B CLEGG	D EVERSON

PAUL B. KREBS WATER TREATMENT PLANT
IMPROVEMENTS
ANNISTON WATER WORKS & SEWER BOARD
CITY OF ANNISTON, ALABAMA

Jacobs

STRUCTURAL
CHLORINE CONTACT BASIN
DEMOLITION
UPPER / LOWER PLAN

REUSE OF DOCUMENTS: THIS DOCUMENT, AND THE IDEAS AND DESIGNS INCORPORATED HEREIN, AS AN INSTRUMENT OF PROFESSIONAL SERVICE, IS THE PROPERTY OF JACOBS AND IS NOT TO BE USED, IN WHOLE OR IN PART, FOR ANY OTHER PROJECT WITHOUT THE WRITTEN AUTHORIZATION OF JACOBS.

VERIFY SCALE
BAR IS ONE INCH ON ORIGINAL DRAWING.
0 1"

DATE	OCTOBER 2024
PROJ	D3698100
DWG	30-S-101
SHEET	52 of 145

BID DOCUMENTS

©JACOBS 2024. ALL RIGHTS RESERVED.

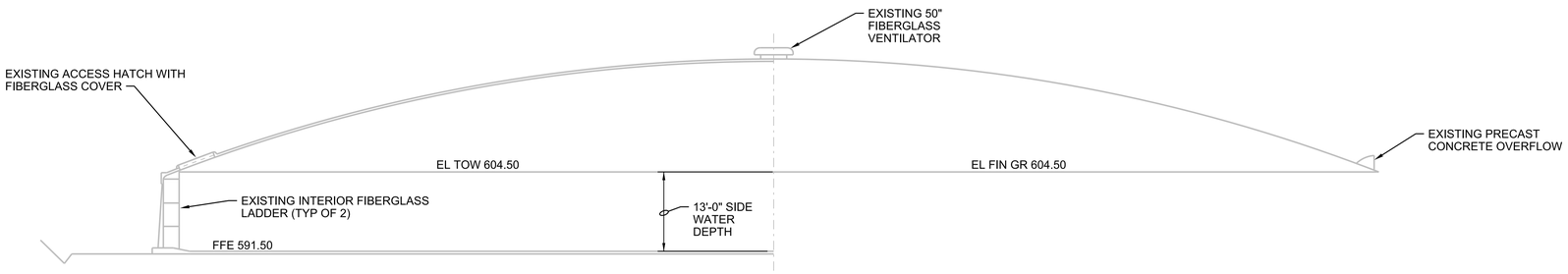

A ELEVATION
NTS
30-S-101

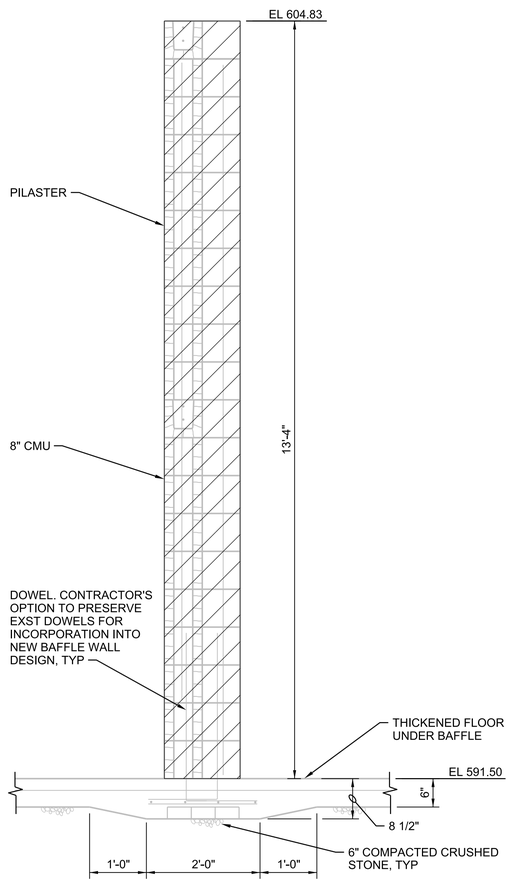

1 SECTION
3/4"=1'-0"
30-S-101

ALABAMA LICENSED No. 29827 PROFESSIONAL ENGINEER GARRICK DONNELL PETTY

Digitally signed by Garrick D Petty Petty
Date: 2024.10.29 14:58:09 -04'00'

NO.	DATE	REVISION	BY	APVD

DSGN	DR	CHK	APVD
G PETTY	B CLEGG	D EVERSON	G PETTY

REUSE OF DOCUMENTS: THIS DOCUMENT, AND THE IDEAS AND DESIGNS INCORPORATED HEREIN, AS AN INSTRUMENT OF PROFESSIONAL SERVICE, IS THE PROPERTY OF JACOBS AND IS NOT TO BE USED, IN WHOLE OR IN PART, FOR ANY OTHER PROJECT WITHOUT THE WRITTEN AUTHORIZATION OF JACOBS.

PAUL B. KREBS WATER TREATMENT PLANT
IMPROVEMENTS
ANNISTON WATER WORKS & SEWER BOARD
CITY OF ANNISTON, ALABAMA

Jacobs

STRUCTURAL
CHLORINE CONTACT BASIN
DEMOLITION
ELEVATION AND SECTION

VERIFY SCALE
BAR IS ONE INCH ON ORIGINAL DRAWING.
0 1"

DATE	OCTOBER 2024
PROJ	D3698100
DWG	30-S-102
SHEET	53 of 145

BID DOCUMENTS

©JACOBS 2024. ALL RIGHTS RESERVED.

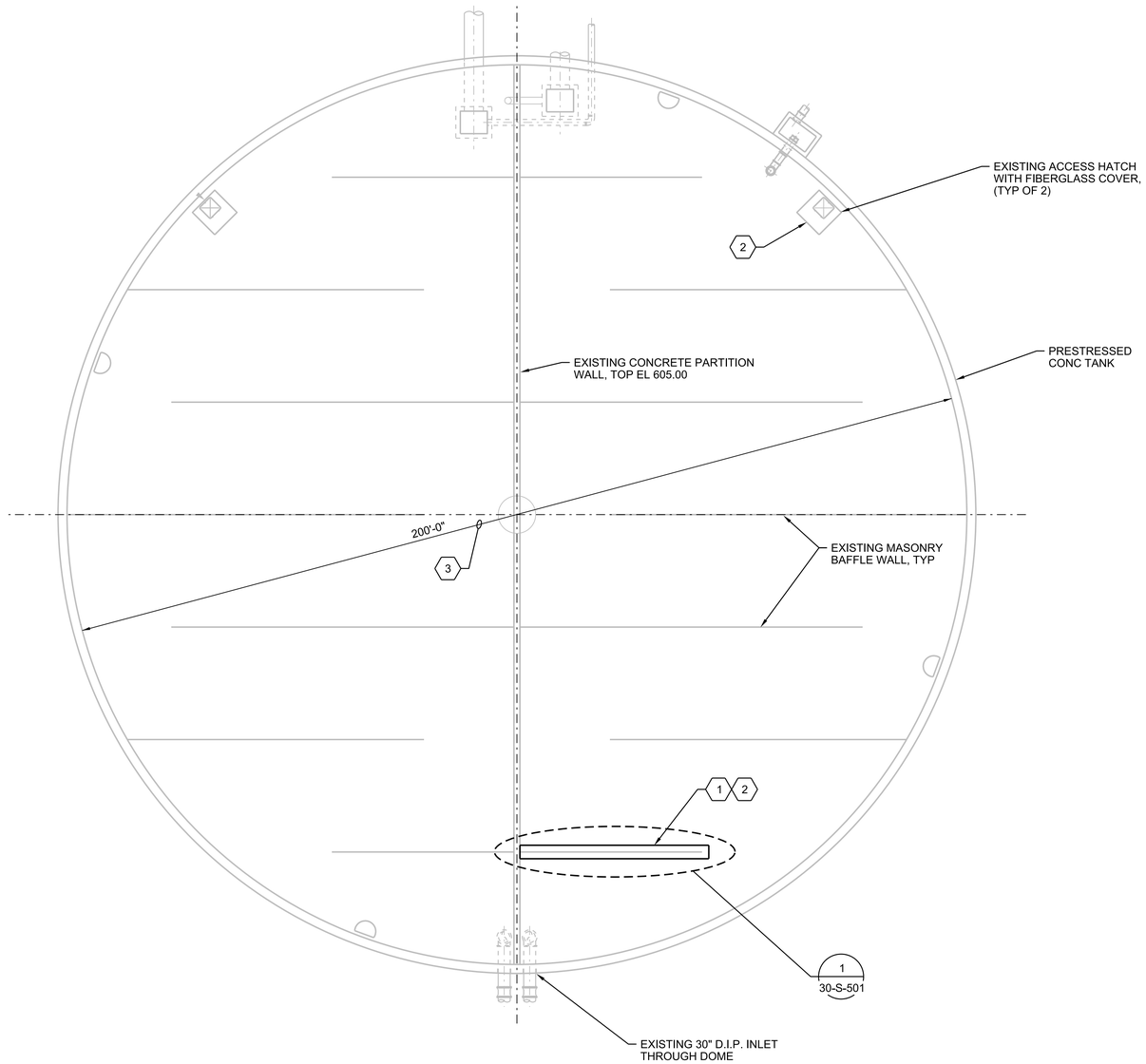

LOWER PLAN

1/16"=1'-0"

GENERAL NOTE

1. FOR GENERAL NOTES SEE DWG 30-S-101.

SHEET KEYNOTES

1. NEW CMU BAFFLE WALL AND PILASTERS SHALL BE DESIGNED BY CONTRACTOR. REPAIR APPROACH SHOWN ON THE DRAWINGS IS FOR CONCEPT ONLY. BAFFLE WALL AND PILASTER SHALL BE FULLY GROUTED. DESIGN NEW CMU WALLS AT A MINIMUM FOR FLUID PRESSURE BASED ON 13'-0" HIGH WATER LEVEL AND MINIMUM 1.5 IMPACT FACTOR FOR WATER STRIKING WALL FROM INLET PIPE. FINAL DESIGN LOADS SHALL BE DETERMINED BY CONTRACTOR. SUBMIT CALCULATIONS STAMPED BY A LICENSED ENGINEER REGISTERED IN THE STATE OF ALABAMA.

2. USE EXISTING HATCH FOR CONSTRUCTION ACCESS INTO BASIN. DO NOT ENLARGE EXISTING OPENING OR ADD NEW ROOF OPENING(S).

3. CONTRACTOR'S BASIN SCOPE OF WORK IN ADDITION TO WORK INCLUDED IN SPECIFICATION 01 11 00.

   A. CLEAN AND REMOVE ALL SILT, DEBRIS, AND LOOSE MATERIAL FROM THE INTERIOR AND EXTERIOR SURFACES OF EXISTING DOME AND WALLS PRIOR TO START OF REPAIR WORK.

   B. CLEAN INTERIOR ALL SURFACE DEFECTIVE AREAS, CRACKS AND EXPOSED REINFORCING BY ABRASIVE OR HYDRO-BLASTING IN ACCORDANCE WITH SPECIFICATIONS 03 01 32 - REPAIR OF VERTICAL AND OVERHEAD CONCRETE SURFACES AND 03 01 33 - REPAIR OF HORIZONTAL CONCRETE SURFACES. REMOVE ALL DEBRIS GENERATED BY CLEANING. NOTE: THE CHLORINE CONTACT BASIN IS DIVIDED INTO TWO SECTIONS. ONE SECTION WILL REMAIN IN OPERATION WHILE WORK IS BEING COMPLETED IN THE OTHER SECTION. CONTRACTOR IS RESPONSIBLE FOR PREVENTING ANY DUST OR DEBRIS FROM ENTERING THE SECTION THAT IS IN OPERATION. CONTRACTOR CAN SUBMIT ALTERNATE CONCRETE REPAIR METHODS FOR REVIEW AND APPROVAL BY ENGINEER.

   C. INSPECT STRUCTURE TO DETERMINE REQUIRED STRUCTURAL REPAIRS ON ALL CONCRETE SURFACES. PROVIDE WRITTEN REPORT SUPPLEMENTED BY DRAWINGS AND PHOTOGRAPHS INDICATING THE LOCATION, SIZE, ESTIMATED QUANTITY AND TYPE OF REPAIR REQUIRED (E.G., ACTIVELY LEAKING & NON-LEAKING CRACKS, EXPOSED REINFORCEMENT REPAIR, AND CONCRETE SURFACE DEFECTS) PRIOR TO STARTING WORK FOR APPROVAL BY OWNER.

   D. REPAIR ALL DEFECTIVE SURFACE AREAS IN ACCORDANCE WITH SPECIFICATIONS 03 01 32 - REPAIR OF VERTICAL AND OVERHEAD CONCRETE SURFACES AND 03 01 33 - REPAIR OF HORIZONTAL CONCRETE SURFACES.

   E. SEAL ALL CRACKS THAT ARE RELATIVELY DRY WITH EPOXY RESIN IN ACCORDANCE WITH SPECIFICATION 03 64 23 - EPOXY RESIN INJECTION GROUTING OR APPROVED ALTERNATE. SEAL ALL WET/LEAKING CRACKS WITH POLYURETHANE RESIN IN ACCORDANCE WITH SPECIFICATION 03 64 24 - POLYURETHANE INJECTION GROUTING OR APPROVED ALTERNATE.

   F. COAT ALL INTERIOR SURFACES OF DOME AND WALLS WITH NSF COMPLIANT COATING AFTER COMPLETION OF ALL CLEANING. COAT EXTERIOR EXPOSED WALL SURFACES AND DOME WITH AN APPROVED CONCRETE PROTECTIVE COATING IN ACCORDANCE WITH SPECIFICATION 09 90 00 - PAINTING AND COATING.

   G. AFTER COMPLETION OF ALL REPAIR WORK, REMOVE ALL DEBRIS AND LOOSE MATERIAL ON ALL INTERIOR AND EXTERIOR SURFACES GENERATED FROM REPAIRS. CLEAN AND DISINFECT ALL INTERIOR DOME, WALLS AND FLOOR SURFACES IN ACCORDANCE WITH THE CURRENT EDITION OF AWWA C653 - DISINFECTION OF WATER TREATMENT PLANTS. CLEAN EXTERIOR EXPOSED WALL AND DOME SURFACES.

4. FOR QUANTITIES TO ASSUME FOR BID, SEE SPECIFICATION 00 41 13.

ALABAMA LICENSED No. 29827 PROFESSIONAL ENGINEER GARRICK DONNELL PETTY

Digitally signed by Garrick D Petty PE
Garrick D Petty PE
Date: 2024.10.29 14:08:12 -04'00'

NO.	DATE	REVISION	BY	APVD

DSGN	DR	CHK	APVD
G PETTY	G PETTY	B CLEGG	D EVERSON

PAUL B. KREBS WATER TREATMENT PLANT
IMPROVEMENTS
ANNISTON WATER WORKS & SEWER BOARD
CITY OF ANNISTON, ALABAMA

Jacobs

STRUCTURAL
CHLORINE CONTACT BASIN
LOWER PLAN

REUSE OF DOCUMENTS: THIS DOCUMENT, AND THE IDEAS AND DESIGNS INCORPORATED HEREIN, AS AN INSTRUMENT OF PROFESSIONAL SERVICE, IS THE PROPERTY OF JACOBS AND IS NOT TO BE USED, IN WHOLE OR IN PART, FOR ANY OTHER PROJECT WITHOUT THE WRITTEN AUTHORIZATION OF JACOBS.

BID DOCUMENTS

VERIFY SCALE
BAR IS ONE INCH ON ORIGINAL DRAWING.
0 1"

DATE	OCTOBER 2024
PROJ	D3698100
DWG	30-S-201
SHEET	54 of 145

©JACOBS 2024. ALL RIGHTS RESERVED.

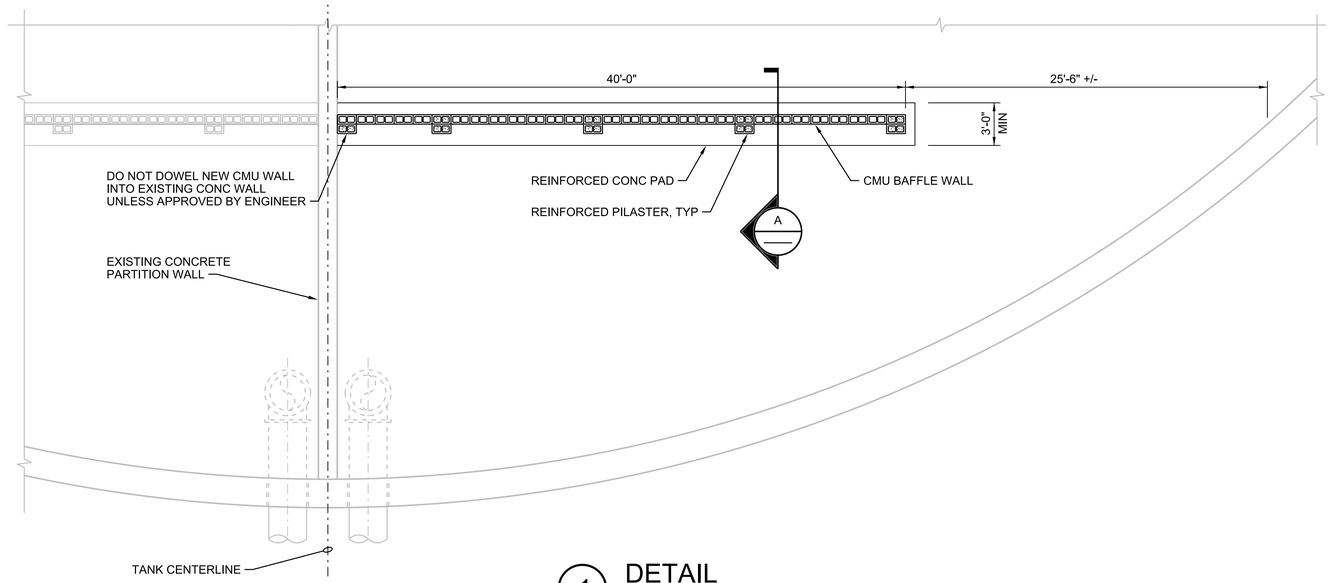

1 DETAIL
3/16" = 1'-0"
30-S-101

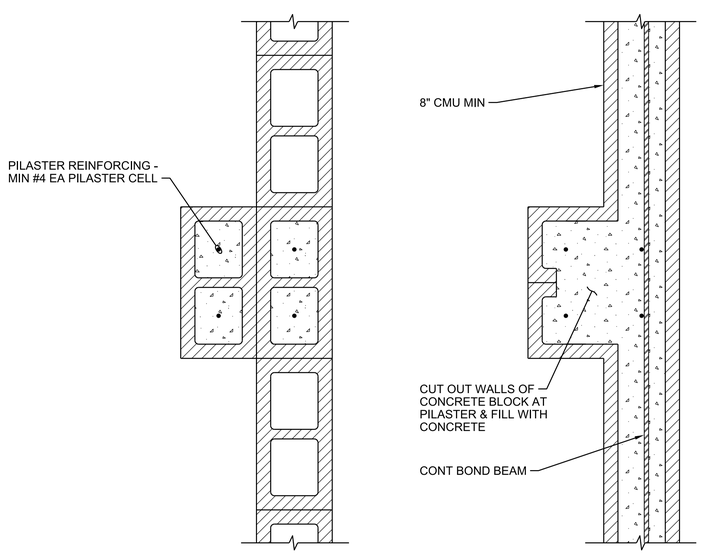

PILASTER PLAN AT FLOOR

PILASTER PLAN AT BOND BEAM

2 DETAIL
1 1/2"=1'-0"
30-S-101

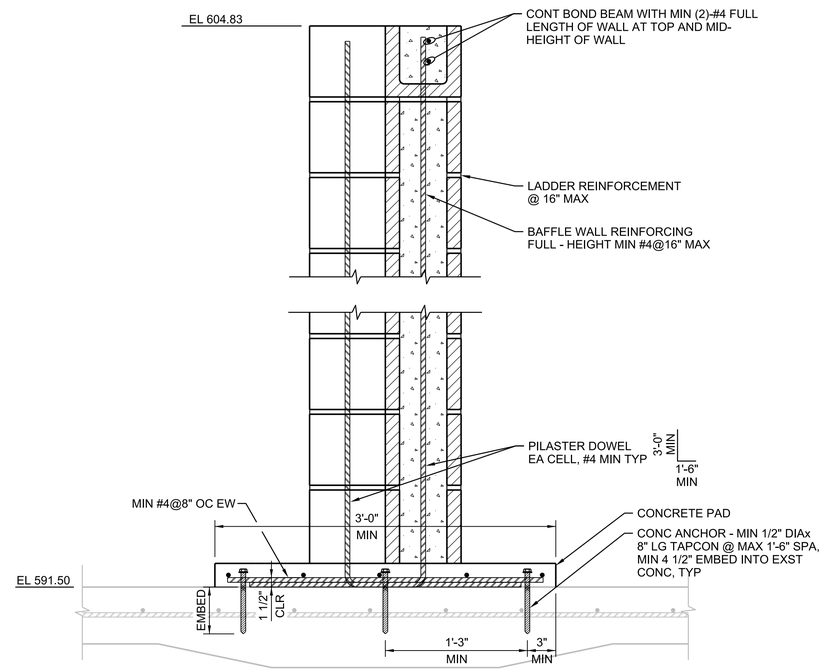

A SECTION
1 1/2"=1'-0"
30-S-101

ALABAMA LICENSED No. 29827 PROFESSIONAL ENGINEER GARRICK DONNELL PETTY

Digitally signed by Garrick D Petty Petty
Date: 2024.10.29 14:08:18-04'00'

NO.	DATE	REVISION	BY	APVD

DSGN G PETTY | DR B CLEGG | CHK D EVERSON | APVD G PETTY

REUSE OF DOCUMENTS: THIS DOCUMENT, AND THE IDEAS AND DESIGNS INCORPORATED HEREIN, AS AN INSTRUMENT OF PROFESSIONAL SERVICE, IS THE PROPERTY OF JACOBS AND IS NOT TO BE USED, IN WHOLE OR IN PART, FOR ANY OTHER PROJECT WITHOUT THE WRITTEN AUTHORIZATION OF JACOBS.

PAUL B. KREBS WATER TREATMENT PLANT
IMPROVEMENTS
ANNISTON WATER WORKS & SEWER BOARD
CITY OF ANNISTON, ALABAMA

Jacobs

STRUCTURAL
CHLORINE CONTACT BASIN SECTIONS AND DETAIL

VERIFY SCALE
BAR IS ONE INCH ON ORIGINAL DRAWING.
0 1"

DATE	OCTOBER 2024
PROJ	D3698100
DWG	30-S-501
SHEET	55 of 145

BID DOCUMENTS

©JACOBS 2024. ALL RIGHTS RESERVED.

SHEET KEYNOTES

1. MINIMUM 30" THICK REINFORCED MAT FOUNDATION. SEE SECTION C/35-S-304 FOR REINFORCING AND SUBGRADE INFORMATION.
2. MINIMUM 30" THICK REINFORCED CONCRETE SLAB. SEE SECTIOND C/35-S-304 FOR REINFORCING INFORMATION.
3. MINIMUM 30" THICK REINFORCED CONCRETE FOOTING. SEE SECTION C/35-S-304 FOR REINFORCING INFORMATION.
4. CONCRETE RETAINING WALL. WALL CONC TO BE PLACED IN MULTIPLE POURS - SEE SECTIONS C/35-S-303 AND E/35-S-306 FOR ADDITIONAL INFORMATION.
5. CONCRETE WALL. SEE SECTIONS B/35-S-302 AND C/35-S-304 FOR REINFORCING INFORMATION, TYP UON.
6. VERTICAL PUMP CAN. COORDINATE LOCATION WITH PROCESS DRAWINGS AND APPROVED EQPT SUBMITTAL.
7. CONCRETE SADDLE PIPE SUPPORT - TYPE 'A' - DETAIL 0330-061.
8. NOT USED.
9. VERTICAL PUMP CONCRETE ENCASEMENT. SEE SECTIONS A/35-S-301 AND C/35-S-304 FOR ADDITIONAL INFORMATION.
10. GRADE BEAM - 30" MIN DEPTH. SEE SECTION D/35-S-304 FOR ADDITIONAL INFORMATION.
11. 30" DIA DRILLED PIER WITH TEMPORARY STEEL CASING - SEE DETAIL 0330-414. 2'-0" MIN SOCKET INTO BEDROCK. MIN (6) #6 DOWELS AT TOP.
    REACTIONS AT TOP OF PIER:
    ULTIMATE: AXIAL = 418 KIPS. SHEAR = 33 KIPS.
    UPLIFT = 0 KIPS
    SERVICE: AXIAL = 316 KIPS. SHEAR = 24 KIPS.
    UPLIFT = 0 KIPS
12. 24" DIA DRILLED PIER WITH TEMPORARY STEEL CASING - SIMILAR TO DETAIL 0330-414. 2'-0" MIN SOCKET INTO BEDROCK. MIN (7) #6 DOWELS AT TOP.
    REACTIONS AT TOP OF PIER:
    ULTIMATE: AXIAL = 168 KIPS. SHEAR = 63 KIPS.
    UPLIFT = 48 KIPS
    SERVICE: AXIAL = 126 KIPS. SHEAR = 42 KIPS.
    UPLIFT = 16 KIPS
13. PREFAB TRENCH DRAIN AND SUMP. SEE PLUMBING 35-P-SERIES DRAWINGS FOR ADDITIONAL INFORMATION. COORDINATE FINAL LOCATION WITH PLUMBING DRAWINGS AND APPROVED TRENCH AND SUMP SUBMITTALS.
14. PROVIDE #6 CORNER BAR T&B AT ALL GRADE BEAM INTERSECTIONS WITH LAP SPLICE EA END.
15. GRADE BEAM. FOR REINFORCEMENT SEE DETAIL 0330-414.
16. SLOPE LOWER GRADE BEAM BOTTOM OF CONC UP TO INTERSECTING UPPER GRADE BEAM WITH 1-TO-1 SLOPE. GRADE BEAM REINF CONTINUOUS THROUGH INTERSECTION.
17. 36"x36" MAX BLOCKOUT FOR GENERATOR ELECTRICAL CONDUITS. COORDINATE LOCATION WITH ELECTRICAL CONTRACTOR AND APPROVED GENERATOR SUBMITTALS. PROVIDE ADDITIONAL REINF AT OPNG SIM TO DETAIL 0330-001. NOTIFY ENGINEER IF OPNG LOCATION OUTSIDE OF LISTED EXTENTS.

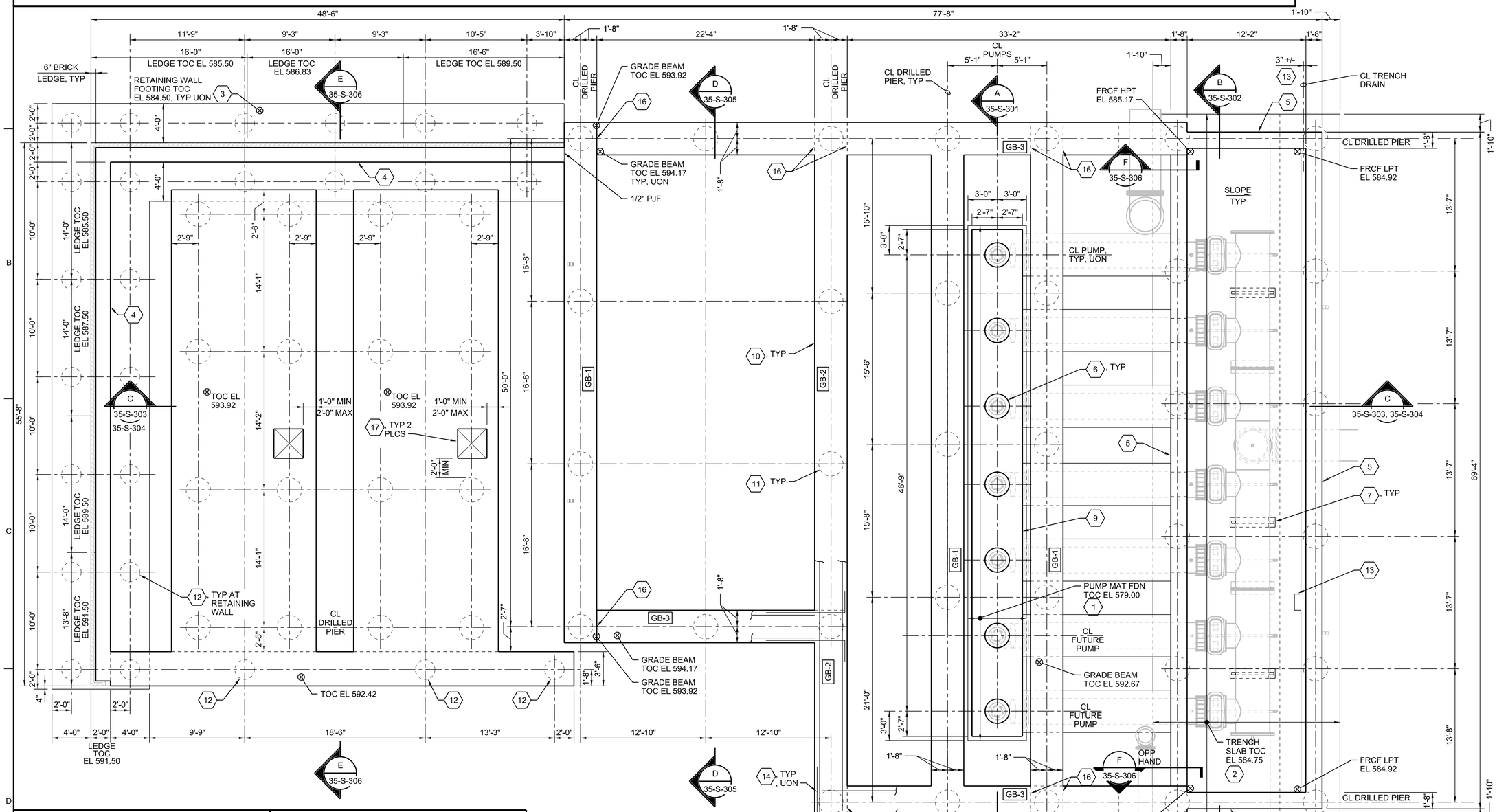

DRILLED PIER AND FOUNDATION PLAN

3/16"=1'-0"

GENERAL SHEET NOTES

1. FOR GENERAL CRITERIA AND ADDITIONAL INFORMATION, SEE STRUCTURAL GENERAL NOTES DWGS.
2. FOR STANDARD DETAILS, SEE 99-SERIES DRAWINGS.
3. SPECIAL LOADS:
   - PUMP ROOM SLAB AND GRATING DESIGNED VEHICULAR LOADING = HS-15 (18 KIPS MAX AXLE LOAD).
4. DRILLED PIER DESIGN, INCLUDING STEEL CASING AND REINFORCEMENT, BY DRILLED PIER ENGINEER LISCENSED IN THE STATE OF ALABAMA IN ACCORDANCE WITH GEOTECHNICAL REPORT.
   - ALLOWABLE BEARING PRESSURE IN BEDROCK = 60 KSF
   - ALLOWABLE SIDE FRICTION IN BEDROCK = 2 KSF
5. CONCRETE ENCASE ALL PIPES BELOW FOUNDATION UP TO 5'-0" BEYOND PERIMETER OF STRUCTURE PER DETAILS 0330-016, 0330-017, AND 0330-018.

ALABAMA LICENSED No. 29827 PROFESSIONAL ENGINEER GARRICK DONNELL PETTY

Digitally signed by Garrick D Petty Petty
Date: 2024.10.29 14:58:23 -04'00'

NO.	DATE	REVISION	BY	APVD

DSGN G PETTY | DR P DENNING | CHK D EVERSON | APVD G PETTY

PAUL B. KREBS WATER TREATMENT PLANT IMPROVEMENTS
ANNISTON WATER WORKS & SEWER BOARD
CITY OF ANNISTON, ALABAMA

REUSE OF DOCUMENTS: THIS DOCUMENT, AND THE IDEAS AND DESIGNS INCORPORATED HEREIN, AS AN INSTRUMENT OF PROFESSIONAL SERVICE, IS THE PROPERTY OF JACOBS AND IS NOT TO BE USED, IN WHOLE OR IN PART, FOR ANY OTHER PROJECT WITHOUT THE WRITTEN AUTHORIZATION OF JACOBS.

Jacobs

STRUCTURAL
FINISHED WATER PUMP STATION DRILLED PIER AND FOUNDATION PLAN

VERIFY SCALE
BAR IS ONE INCH ON ORIGINAL DRAWING.
0 1"

DATE	OCTOBER 2024
PROJ	D3698100
DWG	35-S-201
SHEET	56 of 145

BID DOCUMENTS

©JACOBS 2024. ALL RIGHTS RESERVED.

GENERAL SHEET NOTE

1. FOR ADDITIONAL GENERAL SHEET NOTES, SEE DWG 35-S-201.

SHEET KEYNOTES

1. MINIMUM 16" THICK REINFORCED MAT FOUNDATION. SEE SECTION C/35-S-304 FOR REINFORCING, VAPOR RETARDER, AND SUBGRADE INFORMATION.
2. 8" CMU WITH #6@16" OC VERTICAL, CENTERED IN WALL. TOW EL SEE DWG 35-S-203. SEE DETAIL 0422-001 AND 0422-004 FOR TYPICAL WALL REINFORCING LOCATION. SEE DETAILS 0422-002 AND 0422-003 FOR CMU OPENING REINFORCEMENT.
3. MASONRY LINTEL ABOVE DOOR OPENING - DETAIL 0422-003. 'A' AND 'B' BARS = #6. 'C' BARS = #6.
4. DRAIN AT LPT OF TRENCH DRAIN. SEE CIVIL SITE AND 35-P SERIES PLUMBING DRAWINGS FOR DRAIN INFO.
5. CONCRETE EQUIPMENT PAD - TYPE 'E' - SEE DETAIL 0330-056.
6. AL GRTG - TYPE 'B' AND 'GS-1' SUPPORT - SEE DETAIL 0553-001. GRATING TO SUPPORT VEHICULAR LOAD SPECIFIED IN GENERAL NOTES ON DWG 35-S-201.
7. 12" CMU WITH #6@16" OC VERTICAL, EACH FACE IN WALL. SEE KEYNOTE 2 THIS DWG FOR ADDITIONAL INFORMATION. TYP, UON.
8. SLAB CONSTRUCTION: MIN 8" THICK CONCRETE SLAB REINFORCED WITH #5@8" OC TOP AND BOTTOM EACH WAY ON COMPACTED GRANULAR FILL AFTER OVEREXCAVATION. BOTTOM OF SLAB EL = 593.92 TO MATCH TOC OF FIRST RETAINING WALL POUR. SEE DWG 35-S-201 FOR RETAINING WALL INFO.
9. 6"(W) x 6"(H) CONC CURB - DETAIL 0330-080.
10. NOT USED
11. VERTICAL PUMPS CONCRETE ENCASEMENT/PAD. SEE DWGS 35-S-301 AND 35-S-304 FOR ADDITIONAL INFORMATION.
12. AL FLAT BAR LADDER TYPE 'A' WITH LADDER SAFETY POST - SEE DETAIL 0551-101.
13. W10 = W10x45 (GALV). TOS EL = BOTTOM OF GRTG. BEAM END-TO-WALL CONNECTION SEE DETAIL 0512-056. BEAM REACTION = 30.6 KIPS (SERVICE-LEVEL).
14. GALV STEEL GRTG - TYPE 'C' AND 'GS-1' SUPPORT AT EDGE AND 'GS-2 TWO SIDED' AT INTERIOR SUPPORTS - SEE DETAIL 0553-001.
15. PUMP CENTERLINES SHOWN FOR REFERENCE ONLY. COORDINATE FINAL LOCATION WITH PROCESS DWGS AND APPROVED EQPT SUBMITTAL.
16. CONCRETE EQUIPMENT PAD - TYPE 'H' - SEE DETAIL 0330-056.

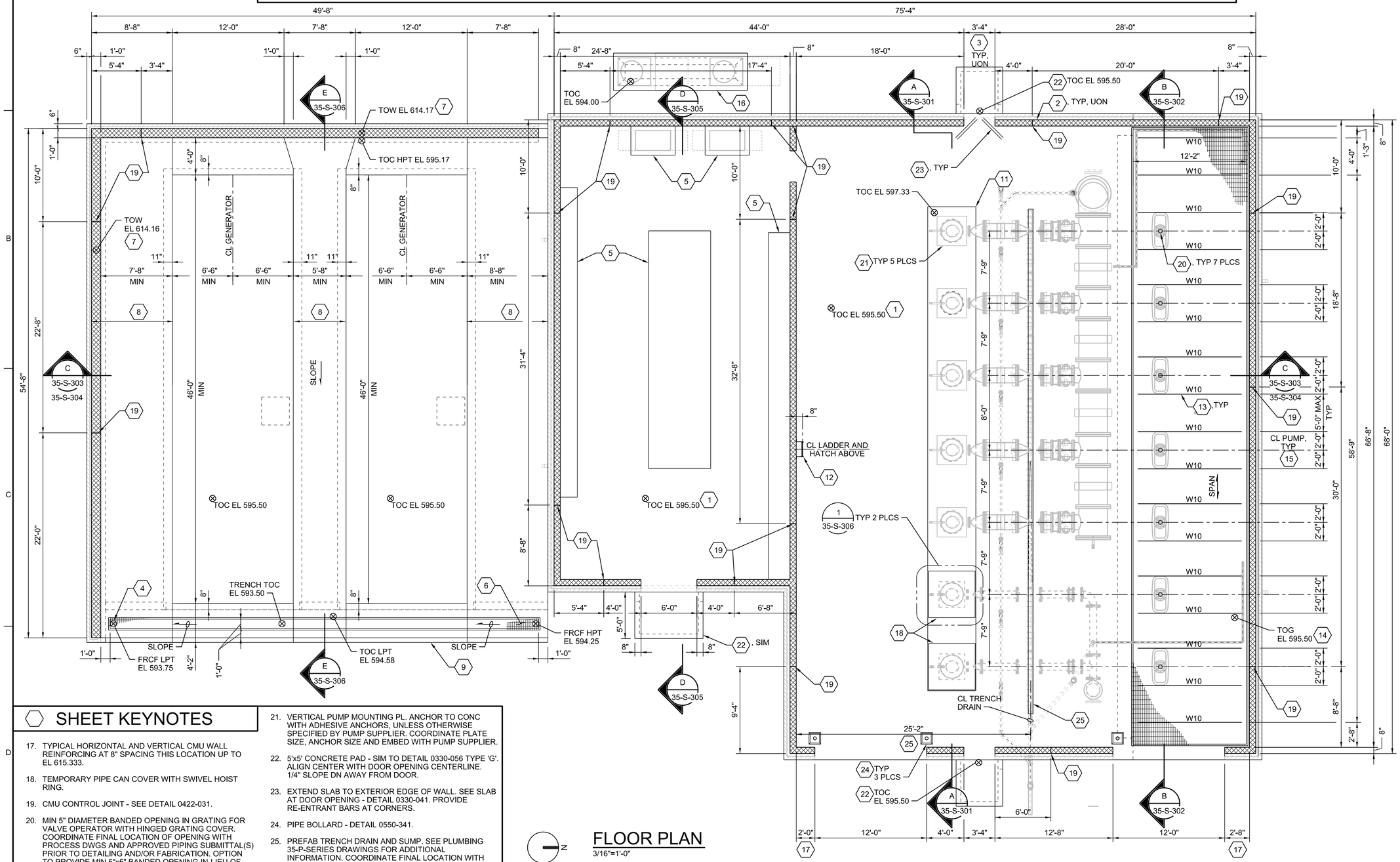

SHEET KEYNOTES

17. TYPICAL HORIZONTAL AND VERTICAL CMU WALL REINFORCING AT 8" SPACING THIS LOCATION UP TO EL 615.333.
18. TEMPORARY PIPE CAN COVER WITH SWIVEL HOIST RING.
19. CMU CONTROL JOINT - SEE DETAIL 0422-031.
20. MIN 5" DIAMETER BANDED OPENING IN GRATING FOR VALVE OPERATOR WITH HINGED GRATING COVER. COORDINATE FINAL LOCATION OF OPENING WITH PROCESS DWGS AND APPROVED PIPING SUBMITTAL(S) PRIOR TO DETAILING AND/OR FABRICATION. OPTION TO PROVIDE MIN 5"x5" BANDED OPENING IN-LIEU OF CIRCULAR OPENING.
21. VERTICAL PUMP MOUNTING PL. ANCHOR TO CONC WITH ADHESIVE ANCHORS, UNLESS OTHERWISE SPECIFIED BY PUMP SUPPLIER. COORDINATE PLATE SIZE, ANCHOR SIZE AND EMBED WITH PUMP SUPPLIER.
22. 5'x5' CONCRETE PAD - SIM TO DETAIL 0330-056 TYPE 'G'. ALIGN CENTER WITH DOOR OPENING CENTERLINE. 1/4" SLOPE DN AWAY FROM DOOR.
23. EXTEND SLAB TO EXTERIOR EDGE OF WALL. SEE SLAB AT DOOR OPENING - DETAIL 0330-041. PROVIDE RE-ENTRANT BARS AT CORNERS.
24. PIPE BOLLARD - DETAIL 0550-341.
25. PREFAB TRENCH DRAIN AND SUMP. SEE PLUMBING 35-P-SERIES DRAWINGS FOR ADDITIONAL INFORMATION. COORDINATE FINAL LOCATION WITH PLUMBING DRAWINGS AND APPROVED TRENCH AND SUMP SUBMITTALS.

FLOOR PLAN

3/16"=1'-0"

ALABAMA LICENSED No. 29827 PROFESSIONAL ENGINEER GARRICK DONNELL PETTY

Digitally signed by Garrick D Petty
Garrick D Petty
Date: 2024.10.29 14:08:25-04'00'

NO.	DATE	REVISION	BY	APVD

DSGN G PETTY | DR P KARABAN | CHK D EVERSON | APVD G PETTY

PAUL B. KREBS WATER TREATMENT PLANT
IMPROVEMENTS
ANNISTON WATER WORKS & SEWER BOARD
CITY OF ANNISTON, ALABAMA

REUSE OF DOCUMENTS: THIS DOCUMENT, AND THE IDEAS AND DESIGNS INCORPORATED HEREIN, AS AN INSTRUMENT OF PROFESSIONAL SERVICE, IS THE PROPERTY OF JACOBS AND IS NOT TO BE USED, IN WHOLE OR IN PART, FOR ANY OTHER PROJECT WITHOUT THE WRITTEN AUTHORIZATION OF JACOBS.

Jacobs

STRUCTURAL
FINISHED WATER PUMP STATION FLOOR PLAN

VERIFY SCALE
BAR IS ONE INCH ON ORIGINAL DRAWING.
0 1"

DATE	OCTOBER 2024
PROJ	D3698100
DWG	35-S-202
SHEET	57 of 145

BID DOCUMENTS

FILENAME: 35-S-202_D3698100.dgn PLOT DATE: 10/22/2024 PLOT TIME: 12:55:44 PM

©JACOBS 2024. ALL RIGHTS RESERVED.

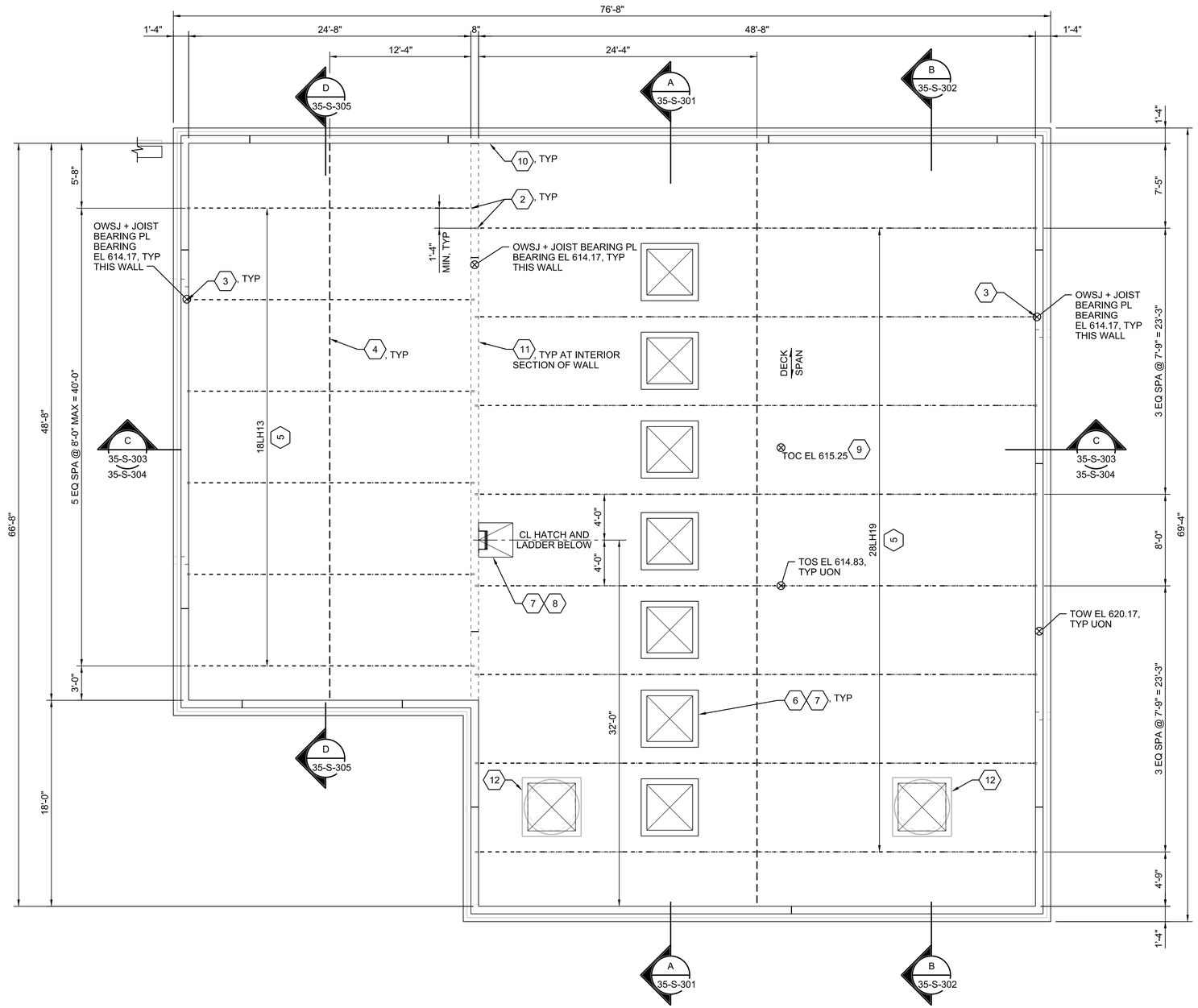

ROOF FRAMING PLAN

3/16"=1'-0"

GENERAL SHEET NOTE

1. FOR ADDITIONAL GENERAL SHEET NOTES, SEE DWG 35-S-201.
2. SNOW DRIFT:
   - DRIFT WIDTH FROM INTERIOR FACE OF CMU PARAPET = 7'-1"
   - MAXIMUM DRIFT SURCHARGE ABOVE BALANCED SNOW LOAD = 26 PSF
   - BALANCED SNOW LOAD = 5 PSF
   - MINMUM UNIFORM ROOF DESIGN SNOW LOAD = SEE STRUCTURAL GENENRAL NOTES DRAWINGS
3. WIND LOADS ON JOIST:
   - TYPICAL POSITIVE (DOWNWARD) ROOF PRESSURE = 15 PSF (TOP CHORD)
   - MAXIMUM UPLIFT PRESSURE = 40 PSF

SHEET KEYNOTES

1. NOT USED.
2. INTERIOR WALL STEEL JOIST SEAT - DETAIL 0521-001.
3. EXTERIOR WALL STEEL JOIST SEAT - DETAIL 0521-002.
4. 'LH' JOIST BRIDGING - SEE DETAIL 0521-021. FINAL LOCATION AND QUANTITY OF BRIDGING BY JOIST SUPPLIER.
5. OWSJ. 7 1/2" JOIST SEAT, UNLESS OTHERWISE APPROVED BY ENGINEER. SEE STRUCTURAL GENERAL NOTES DRAWINGS FOR JOIST LOADING INFORMATION.
6. SKYLIGHT ON CONCRETE CURB. SEE ARCH DWGS FOR SKYLIGHT INFO. 8"(W) X 24" (H) CONCRETE CURB = SEE DETAIL 0330-080. COORDINATE CURB SIZE AND LOCATION WITH ARCH DWGS AND APPROVED SKYLIGHT SUBMITTAL.
7. ROOF OPENING - DETAIL 0531-021. COORDINATE OPENING SIZE AND LOCATION WITH ARCH DWGS AND APPROVED SKYLIGHT OR ROOF HATCH SUBMITTAL.
8. ROOF HATCH. SEE ARCH DWGS FOR ADDITIONAL INFORMATION. COORDINATE SIZE WITH APPROVED HATCH SUBMITTAL.
9. CONCRETE SLAB ON 1 1/2" STEEL COMPOSITE DECK (5" TOTAL THICKNESS) REINFORCED WITH #4@8" OC EW. SEE SLAB-ON-DECK REINFORCING DETAIL 0330-007 AND STEEL DECK PROPERTIES THIS DWG. MINIMUM 2 SPAN UNSHORD CONDITION.
10. DECKING LEDGER SUPPORT ANGLE - DETAIL 0531-00. BREAK SUPPORT AT JOIST LOCATIONS. 6" CLEAR MAX EA SIDE.
11. METAL DECK BEARING WALL TOP CONNECTION - SEE DETAIL 531-001.
12. ROOF OPENING FOR ROOF TOP FAN - DETAIL 0531-021. SEE MECH DRAWINGS FOR ADDITIONAL INFO. COORDINATE OPENING SIZE AND LOCATION WITH APPROVED EQPT SUBMITTAL. DESIGN FAN WEIGHT = 600 LBS MAX. NOTIFY ENGINEER IF MAX WEIGHT EXCEEDED.

STEEL DECK PROPERTIES AND FASTENING CRITERIA - SEE SPECS FOR ADDITIONAL INFORMATION

TYPE	DEPTH	PANEL WIDTH	MIN DESIGN THICKNESS	MIN YIELD STRENGTH Fy (ksi)	MIN (+) S(In3/FT)	MIN (-) S(In3/FT)	MIN (-) I(In4/FT)	MIN ASD ALLOWABLE DIAPHRAGM SHEAR CAPACITY (LBS/FT) MIN	FINISH	AT PERPENDICULAR SUPPORT		AT PARALLEL SUPPORT		AT SIDELAPS **	
										TYPE	NO PER SHEET	TYPE	SPACING	TYPE	NO. PER SPAN
COMPOSITE DECK	1.50"	36"	19 GA	50	0.266	0.278	0.257	2880	GALV, G-90	HILTI X-ENP19 PAF	4	HILTI X-ENP19 PAF	12"	#10 TEK SCREW	3 (ONE AT MID-SPAN)

** MANUFACTURER'S STANDARD SIDELAP CONNECTIONS OR OTHER SIDELAP CONNECTIONS ARE ALLOWED PER APPROVAL OF STRUCTURAL ENGINEER.

ALABAMA LICENSED No. 29827 PROFESSIONAL ENGINEER GARRICK DONNELL PETTY

Digitally signed by Garrick D Petty Petty
Date: 2024.10.29 14:08:28-04'00'

NO.	DATE	REVISION	BY	APVD

DR: G PETTY | CHK: P DENNING | APVD: D EVERSON | APVD: G PETTY

PAUL B. KREBS WATER TREATMENT PLANT
IMPROVEMENTS
ANNISTON WATER WORKS & SEWER BOARD
CITY OF ANNISTON, ALABAMA

REUSE OF DOCUMENTS: THIS DOCUMENT, AND THE IDEAS AND DESIGNS INCORPORATED HEREIN, AS AN INSTRUMENT OF PROFESSIONAL SERVICE, IS THE PROPERTY OF JACOBS AND IS NOT TO BE USED, IN WHOLE OR IN PART, FOR ANY OTHER PROJECT WITHOUT THE WRITTEN AUTHORIZATION OF JACOBS.

Jacobs

STRUCTURAL
FINISHED WATER PUMP STATION
ROOF FRAMING PLAN

3/16"1'-0"
VERIFY SCALE
BAR IS ONE INCH ON ORIGINAL DRAWING.
0 1"

DATE	OCTOBER 2024
PROJ	D3698100
DWG	35-S-203
SHEET	58 of 145

BID DOCUMENTS

©JACOBS 2024. ALL RIGHTS RESERVED.

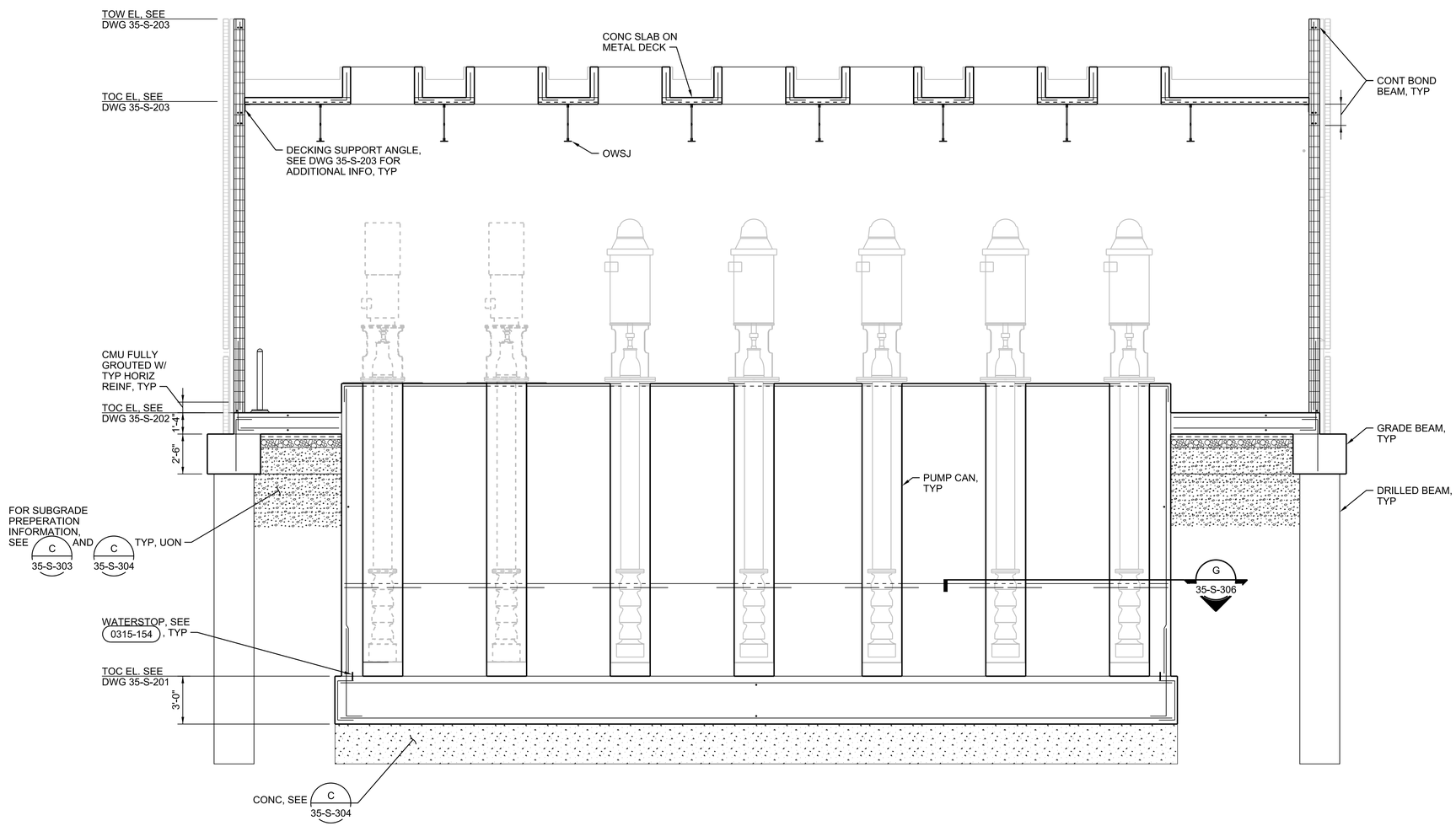

A SECTION
1/4"=1'-0"
35-S-201, 35-S-202, 35-S-203

NOTE:

FOR ADDITIONAL INFORMATION, SEE C 35-S-303 AND C 35-S-304

ALABAMA LICENSED No. 29827 PROFESSIONAL ENGINEER GARRICK DONNELL PETTY

Digitally signed by Garrick D Petty Petty
Date: 2024.10.29 14:08:32 -04'00'

NO.	DATE	REVISION	BY	APVD

DSGN	G PETTY	DR	P KARABAN
CHK	D EVERSON	APVD	G PETTY

REUSE OF DOCUMENTS: THIS DOCUMENT, AND THE IDEAS AND DESIGNS INCORPORATED HEREIN, AS AN INSTRUMENT OF PROFESSIONAL SERVICE, IS THE PROPERTY OF JACOBS AND IS NOT TO BE USED, IN WHOLE OR IN PART, FOR ANY OTHER PROJECT WITHOUT THE WRITTEN AUTHORIZATION OF JACOBS.

PAUL B. KREBS WATER TREATMENT PLANT
IMPROVEMENTS
ANNISTON WATER WORKS & SEWER BOARD
CITY OF ANNISTON, ALABAMA

Jacobs

STRUCTURAL
FINISHED WATER PUMP STATION
SECTION

3/16"1'-0"
VERIFY SCALE
BAR IS ONE INCH ON ORIGINAL DRAWING.
0 1"

DATE	OCTOBER 2024
PROJ	D3698100
DWG	35-S-301
SHEET	59 of 145

BID DOCUMENTS

©JACOBS 2024. ALL RIGHTS RESERVED.

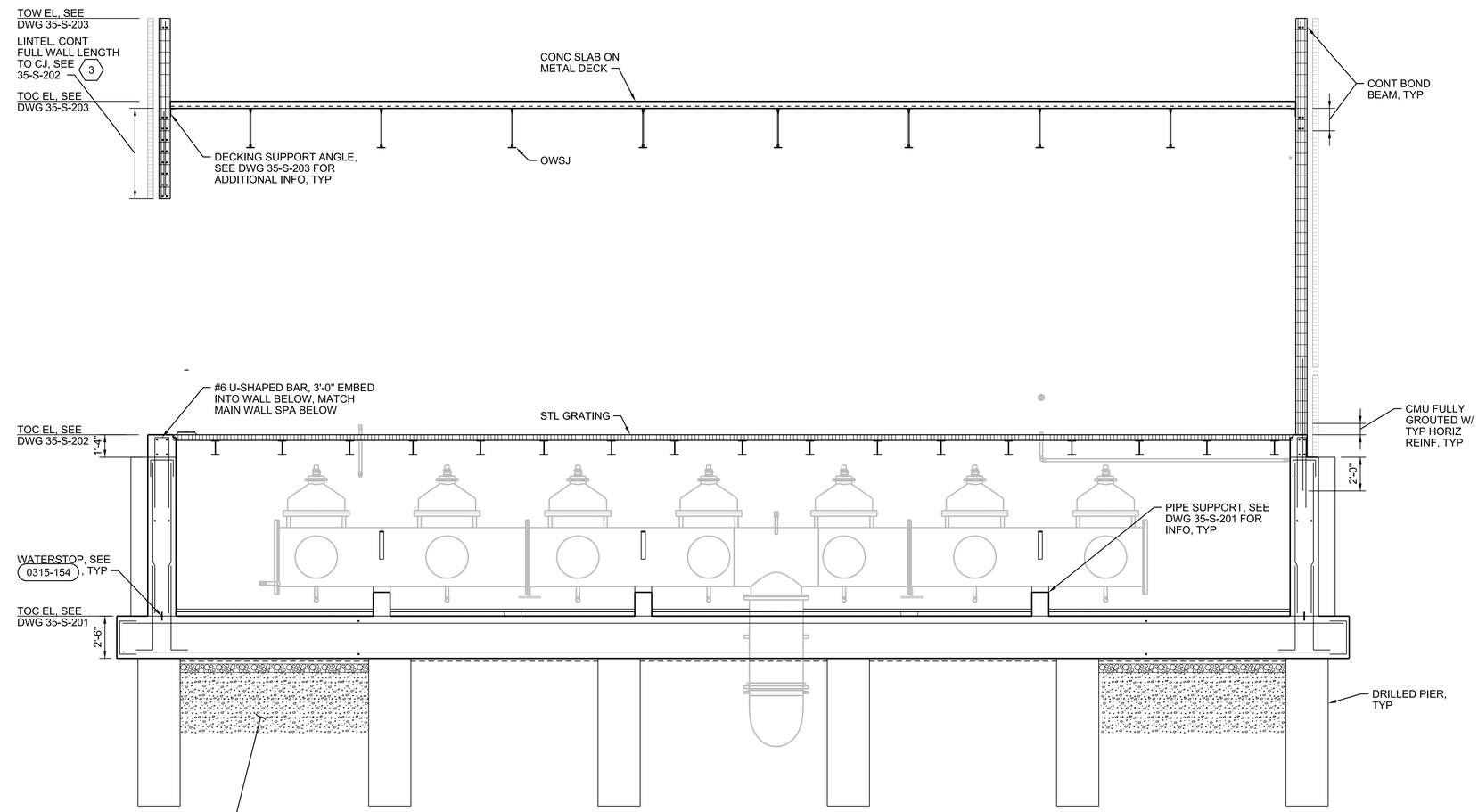

B SECTION
1/4"=1'-0"
35-S-201, 35-S-202
35-S-203

NOTE:

FOR ADDITIONAL INFORMATION, SEE C 35-S-303 AND C 35-S-304

ALABAMA LICENSED No. 29827 PROFESSIONAL ENGINEER GARRICK DONNELL PETTY

Digitally signed by Garrick D Petty Petty
Date: 2024.10.29 14:08:36-04'00'

NO.	DATE	REVISION	BY	APVD
DSGN	G PETTY	DR P KARABAN	CHK D EVERSON	APVD G PETTY

REUSE OF DOCUMENTS: THIS DOCUMENT, AND THE IDEAS AND DESIGNS INCORPORATED HEREIN, AS AN INSTRUMENT OF PROFESSIONAL SERVICE, IS THE PROPERTY OF JACOBS AND IS NOT TO BE USED, IN WHOLE OR IN PART, FOR ANY OTHER PROJECT WITHOUT THE WRITTEN AUTHORIZATION OF JACOBS.

PAUL B. KREBS WATER TREATMENT PLANT
IMPROVEMENTS
ANNISTON WATER WORKS & SEWER BOARD
CITY OF ANNISTON, ALABAMA

Jacobs

STRUCTURAL
FINISHED WATER PUMP STATION
SECTION

3/16"1'-0"
VERIFY SCALE
BAR IS ONE INCH ON ORIGINAL DRAWING.
0 1"

DATE	OCTOBER 2024
PROJ	D3698100
DWG	35-S-302
SHEET	60 of 145

BID DOCUMENTS

©JACOBS 2024. ALL RIGHTS RESERVED.

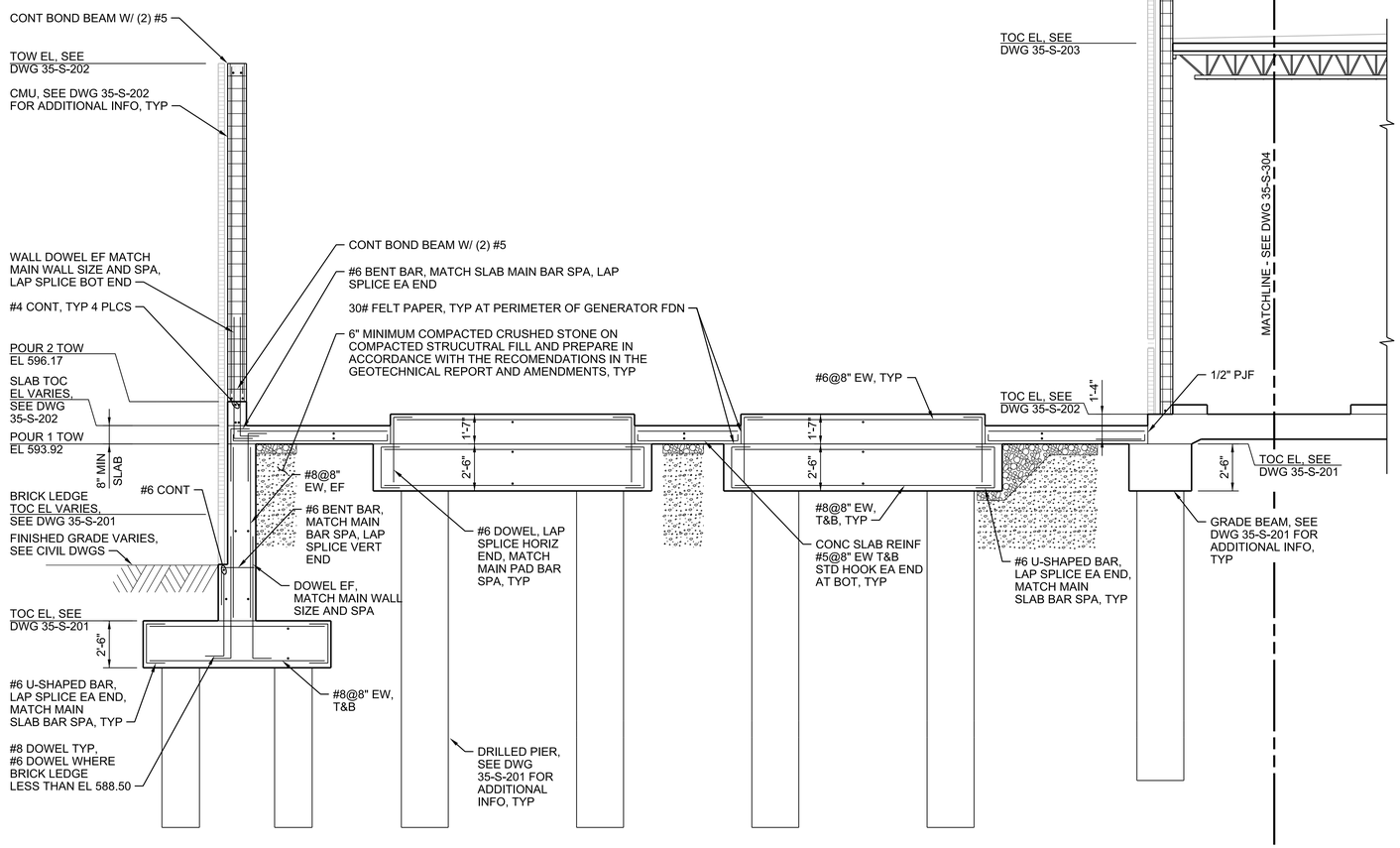

C SECTION
1/4"=1'-0"
35-S-201, 35-S-202
35-S-203

ALABAMA LICENSED No. 29827 PROFESSIONAL ENGINEER GARRICK DONNELL PETTY

Digitally signed by Garrick D Petty Petty
Date: 2024.10.29 14:08:00 -04'00'

NO.	DATE	REVISION	BY	APVD

DSGN	G PETTY	DR	P KARABAN	CHK	D EVERSON	APVD	G PETTY

PAUL B. KREBS WATER TREATMENT PLANT
IMPROVEMENTS
ANNISTON WATER WORKS & SEWER BOARD
CITY OF ANNISTON, ALABAMA

Jacobs

STRUCTURAL
FINISHED WATER PUMP STATION
SECTION

REUSE OF DOCUMENTS: THIS DOCUMENT, AND THE IDEAS AND DESIGNS INCORPORATED HEREIN, AS AN INSTRUMENT OF PROFESSIONAL SERVICE, IS THE PROPERTY OF JACOBS AND IS NOT TO BE USED, IN WHOLE OR IN PART, FOR ANY OTHER PROJECT WITHOUT THE WRITTEN AUTHORIZATION OF JACOBS.

3/16"1'-0"
VERIFY SCALE
BAR IS ONE INCH ON ORIGINAL DRAWING.
0 1"

DATE	OCTOBER 2024
PROJ	D3698100
DWG	35-S-303
SHEET	61 of 145

BID DOCUMENTS

©JACOBS 2024. ALL RIGHTS RESERVED.

GENERAL SHEET NOTE

1. PLACE STRUCTURAL FILL ON EACH SIDE OF VERTICAL PUMP CAN CONCRETE ENCASEMENT IN EQUAL LIFTS, NOT EXCEEDING 1'-0" HEIGHT DIFFERENCE ON EACH SIDE.

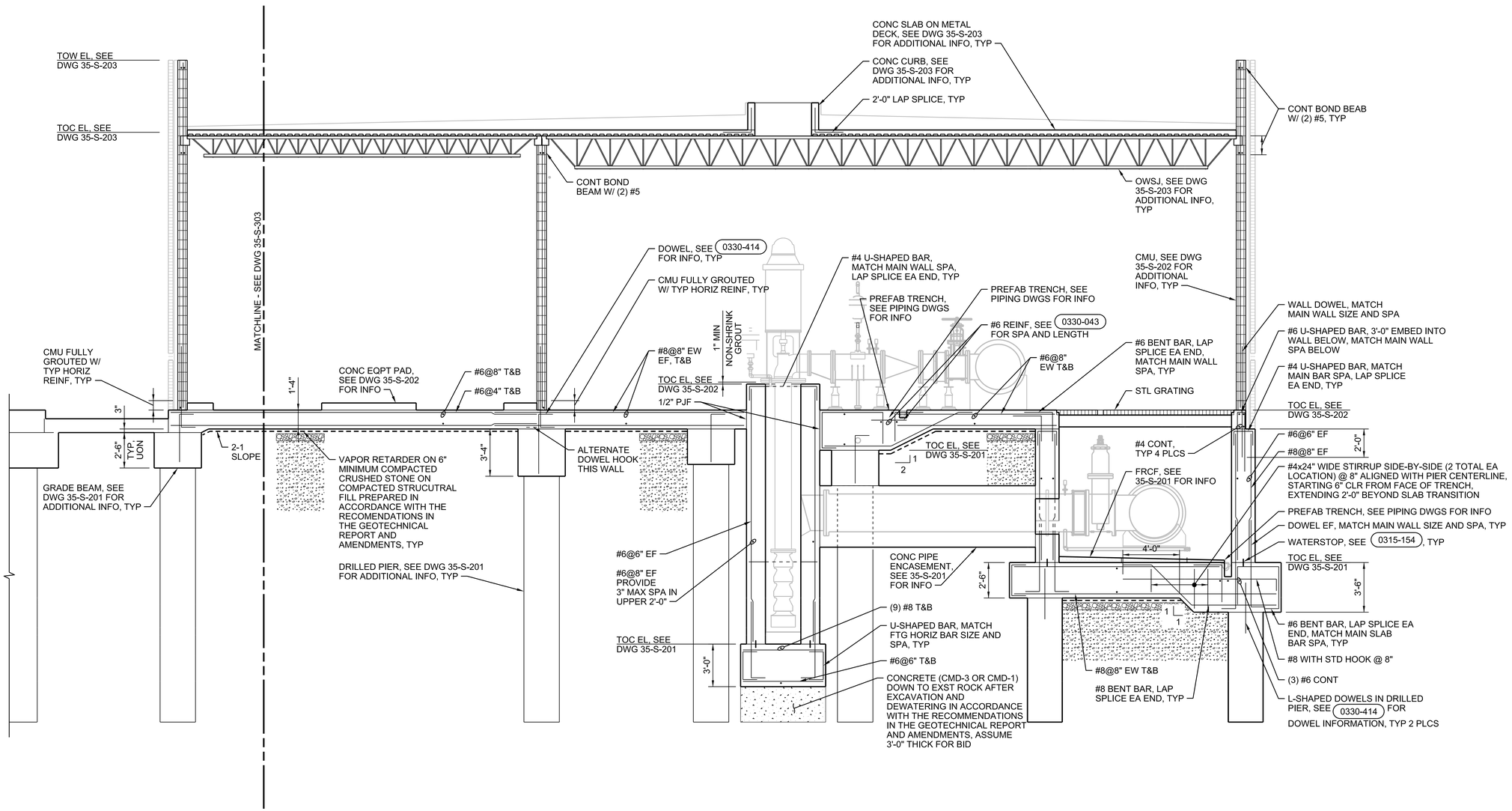

C SECTION
1/4"=1'-0"
35-S-201, 35-S-202
35-S-203

NO.	DATE	REVISION	BY	APVD

DSGN G PETTY | DR P KARABAN | CHK D EVERSON | APVD G PETTY

PAUL B. KREBS WATER TREATMENT PLANT IMPROVEMENTS
ANNISTON WATER WORKS & SEWER BOARD
CITY OF ANNISTON, ALABAMA

STRUCTURAL
FINISHED WATER PUMP STATION SECTION

3/16"1'-0"
VERIFY SCALE
BAR IS ONE INCH ON ORIGINAL DRAWING.
0 1"

DATE	OCTOBER 2024
PROJ	D3698100
DWG	35-S-304
SHEET	62 of 145

BID DOCUMENTS

REUSE OF DOCUMENTS: THIS DOCUMENT, AND THE IDEAS AND DESIGNS INCORPORATED HEREIN, AS AN INSTRUMENT OF PROFESSIONAL SERVICE, IS THE PROPERTY OF JACOBS AND IS NOT TO BE USED, IN WHOLE OR IN PART, FOR ANY OTHER PROJECT WITHOUT THE WRITTEN AUTHORIZATION OF JACOBS.

©JACOBS 2024. ALL RIGHTS RESERVED.

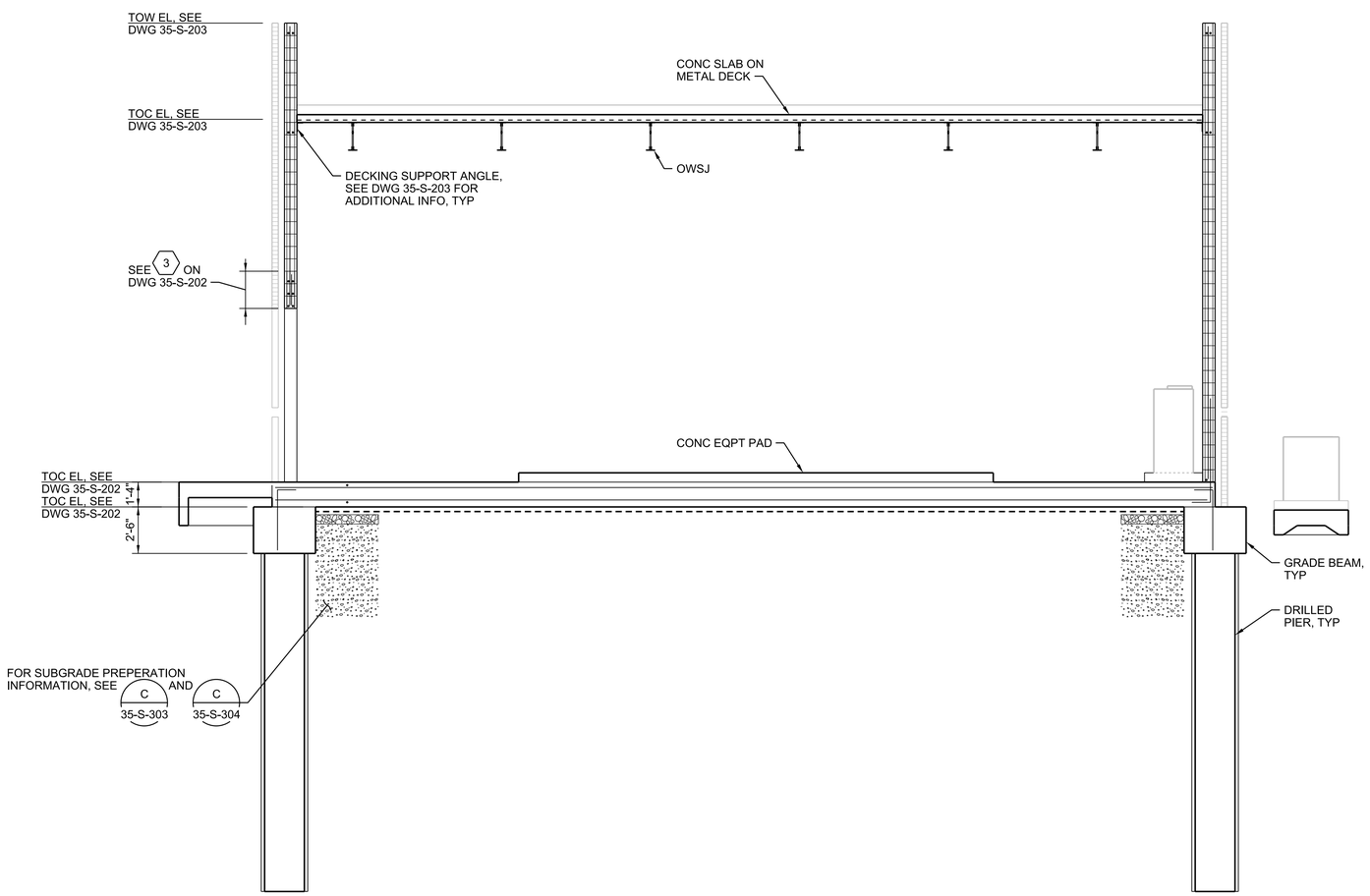

D SECTION
1/4"=1'-0"
35-S-201, 35-S-202
35-S-203

ALABAMA LICENSED No. 29827 PROFESSIONAL ENGINEER GARRICK DONNELL PETTY

Digitally signed by Garrick D Petty Petty
Date: 2024.10.29 14:08:07 -04'00'

NO.	DATE	REVISION	BY	APVD

DSGN G PETTY | DR P KARABAN | CHK D EVERSON | APVD G PETTY

PAUL B. KREBS WATER TREATMENT PLANT
IMPROVEMENTS
ANNISTON WATER WORKS & SEWER BOARD
CITY OF ANNISTON, ALABAMA

REUSE OF DOCUMENTS: THIS DOCUMENT, AND THE IDEAS AND DESIGNS INCORPORATED HEREIN, AS AN INSTRUMENT OF PROFESSIONAL SERVICE, IS THE PROPERTY OF JACOBS AND IS NOT TO BE USED, IN WHOLE OR IN PART, FOR ANY OTHER PROJECT WITHOUT THE WRITTEN AUTHORIZATION OF JACOBS.

Jacobs

STRUCTURAL
FINISHED WATER PUMP STATION
SECTION

3/16"1'-0"
VERIFY SCALE
BAR IS ONE INCH ON ORIGINAL DRAWING.
0 1"

DATE	OCTOBER 2024
PROJ	D3698100
DWG	35-S-305
SHEET	63 of 145

BID DOCUMENTS

©JACOBS 2024. ALL RIGHTS RESERVED.

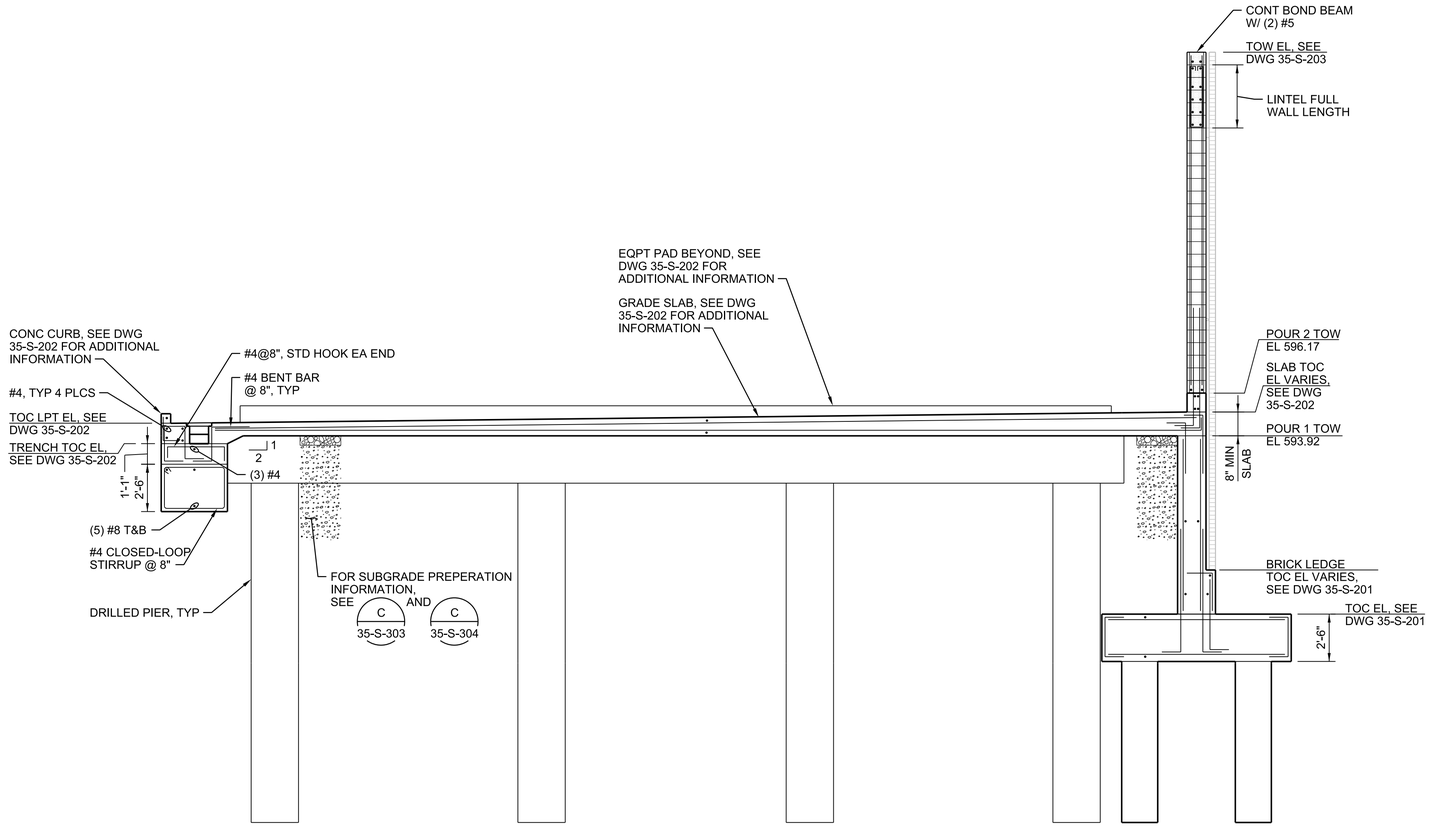

NOTE:

FOR ADDITIONAL INFORMATION, SEE C 35-S-303 AND C 35-S-304

E SECTION 1/4"=1'-0"
35-S-201, 35-S-202

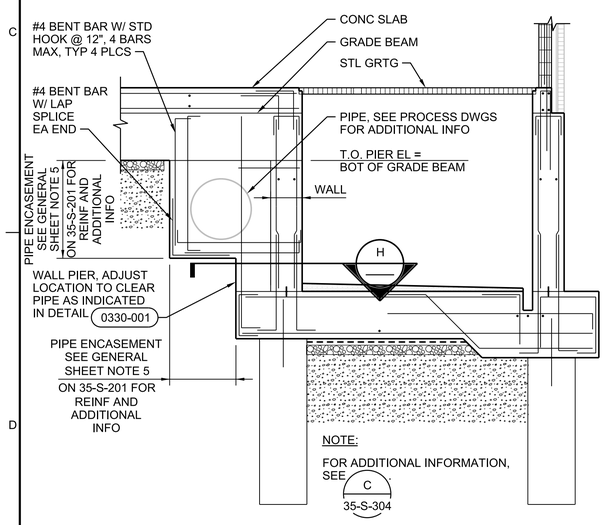

NOTE:

FOR ADDITIONAL INFORMATION, SEE C 35-S-304

F SECTION 1/4"=1'-0"
35-S-201

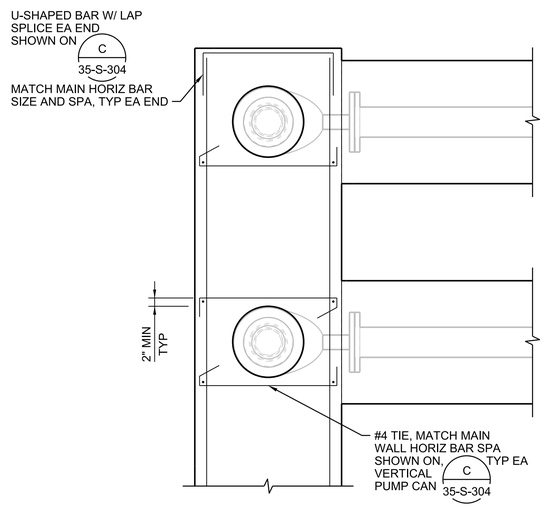

G SECTION 3/8"=1'-0"
35-S-301

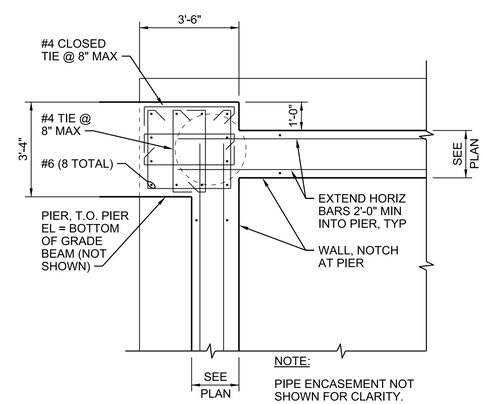

NOTE:

PIPE ENCASEMENT NOT SHOWN FOR CLARITY.

H SECTION 3/8"=1'-0"

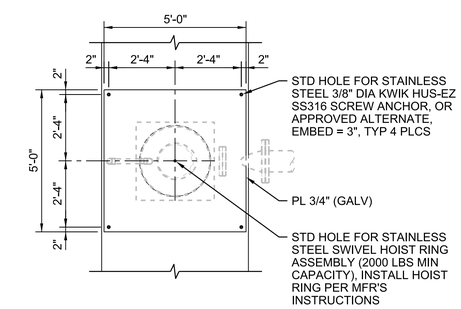

1 DETAIL 3/8"=1'-0"
35-S-202

ALABAMA LICENSED No. 29827 PROFESSIONAL ENGINEER GARRICK DONNELL PETTY

Digitally signed by Garrick D Petty
Garrick D Petty, PE
Date: 2024.10.29 14:08:51 -04'00'

NO.	DATE	REVISION	BY	APVD

DSGN G PETTY | DR P KARABAN | CHK D EVERSON | APVD G PETTY

PAUL B. KREBS WATER TREATMENT PLANT
IMPROVEMENTS
ANNISTON WATER WORKS & SEWER BOARD
CITY OF ANNISTON, ALABAMA

REUSE OF DOCUMENTS: THIS DOCUMENT, AND THE IDEAS AND DESIGNS INCORPORATED HEREIN, AS AN INSTRUMENT OF PROFESSIONAL SERVICE, IS THE PROPERTY OF JACOBS AND IS NOT TO BE USED, IN WHOLE OR IN PART, FOR ANY OTHER PROJECT WITHOUT THE WRITTEN AUTHORIZATION OF JACOBS.

Jacobs

STRUCTURAL

FINISHED WATER PUMP STATION SECTIONS AND DETAIL

VERIFY SCALE
BAR IS ONE INCH ON ORIGINAL DRAWING.
0 1"

DATE	OCTOBER 2024
PROJ	D3698100
DWG	35-S-306
SHEET	64 of 145

BID DOCUMENTS

©JACOBS 2024. ALL RIGHTS RESERVED.

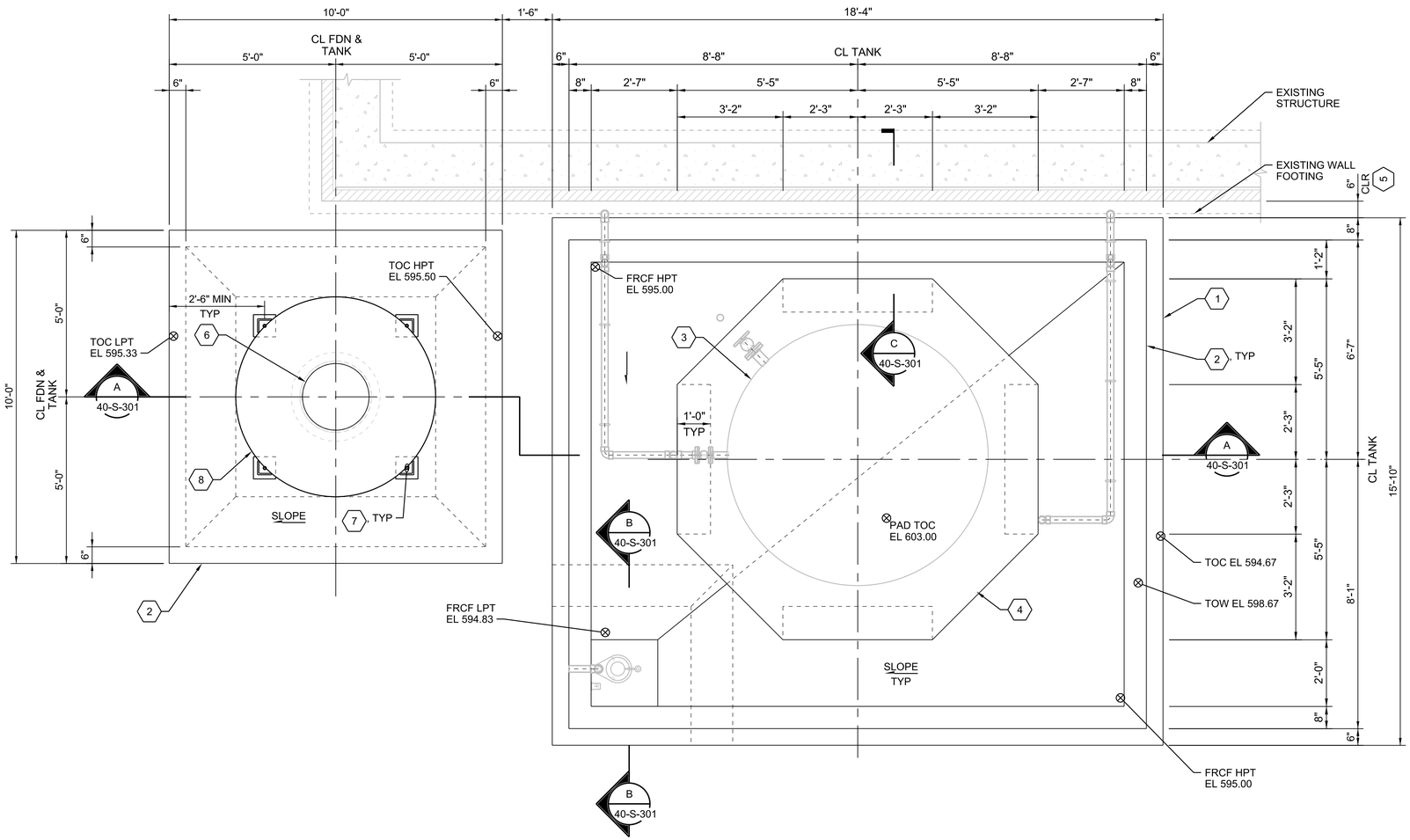

PLAN
1/2"=1'-0"

GENERAL SHEET NOTES

1. FOR DESIGN CRITERIA AND ADDITIONAL INFORMATION SEE STRUCTURAL GENERAL NOTES DRAWINGS.
2. FOR STANDARD DETAILS SEE 99-S-SERIES DRAWINGS.
3. VERIFY AND/OR COORDINATE FINAL DIMENSIONS, GEOMETRY, ELEVATIONS AND LOCATION OF SURGE TANK EQPT WITH PROCESS DRAWINGS AND EQPT SUPPLIER, AND APPROVED EQPT SUBMITTAL PRIOR TO STARTING WORK. NOTIFY ENGINEER IF CONDITIONS VARY FROM THAT SHOWN PRIOR TO STARTING WORK.
4. FIELD VERIFY LOCATION OF EXISTING STRUCTURE. FOR ADDITIONAL INFORMATION ON EXISTING STRUCTURE, SEE RECORD DRAWING SET DATED 1997.
5. FOUNDATION DESIGN BASED ON 'PULSOC' SURGE TANK:
   - MODEL NO. VT-72-2500-250.
   - SIZE = 72" DIA x 167" HEIGHT
   - ASSUMED ANCHOR BOLE CIRCLE = 4FT
   - CAPACITY = 2500 US GALLONS
   - ASSUMED CONTENTS WEIGHT = 26067.6 LBS (SG = 1.25)
   - EMPTY WEIGHT = 9900 LBS
   - PIPE DIAMETER THROUGH SLAB = 24"

SHEET KEYNOTES

1. CONCRETE CONTAINMENT STRUCTURE. PROVIDE CONCRETE PROTECTIVE COATING ON ALL INTERIOR SURFACES.
2. SURGE TANK CONCRETE FOUNDATION. CONTRACTOR'S OPTIONS TO PROVIDE MIN 2'-0" THICK FOUNDATION REINFORECED WITH #6@8" EW T&B, IN-LIEU OF THICKENED EDGES.
3. FLUORIDE TANK. SEE PROCESS DRAWINGS FOR TANK INFO. TANK RESTRAINTS AND ANCHORAGE SHALL BE DESIGNED BY TANK SUPPLIER. SUBMIT ANCHORAGE CALCULATIONS STAMPED BY A LICENSED ENGINEER REGISTERED IN THE STATE OF ALABAMA.
4. TANK PAD SIM TO DETAIL 0330-058. SLAB AND WALL REINF #5@8" EW, EF.
5. FIELD VERIFY LOCATION OF EXISTING WALL FOOTING. LOCATE EXTERIOR EDGE OF NEW FOOTING 1" CLR OF EXISTING FOOTING.
6. PIPE OPNG IN SLAB. PROIVDE OPNG REINFORCEMENT T&B PER DETAIL 0330-001. PROVIDE MIN 2 BARS T&B EA SIDE OF OPNG.
7. SURGE TANK ANCHORAGE SHALL BE DESIGNED BY TANK SUPPLIER. SUBMIT ANCHORAGE CALCULATIONS STAMPED BY A LICENSED ENGINEER REGISTERED IN THE STATE OF ALABAMA.

   FOR FOUNDATION DESIGN, ASSUMED ULTIMATE ANCHOR DESIGN LOADS:
   - TENSION = 4.4 KIPS PER SUPPORT LEG
   - SHEAR = 0.9 KIPS PER SUPPORT LEG
8. SURGE TANK. SEE APPROVED EQPT DWGS FOR INFORMATION.

ALABAMA LICENSED No. 29827 PROFESSIONAL ENGINEER GARRICK DONNELL PETTY

Digitally signed by Garrick D Petty Petty
Date: 2024.10.29 14:08:56-04'00'

NO.	DATE	REVISION	BY	APVD

DSGN G PETTY | DR G PETTY | CHK P KARABAN | APVD D EVERSON | APVD G PETTY

PAUL B. KREBS WATER TREATMENT PLANT
IMPROVEMENTS
ANNISTON WATER WORKS & SEWER BOARD
CITY OF ANNISTON, ALABAMA

REUSE OF DOCUMENTS: THIS DOCUMENT, AND THE IDEAS AND DESIGNS INCORPORATED HEREIN, AS AN INSTRUMENT OF PROFESSIONAL SERVICE, IS THE PROPERTY OF JACOBS AND IS NOT TO BE USED, IN WHOLE OR IN PART, FOR ANY OTHER PROJECT WITHOUT THE WRITTEN AUTHORIZATION OF JACOBS.

Jacobs

STRUCTURAL
FLUORIDE AND SURGE TANK PLAN

VERIFY SCALE
BAR IS ONE INCH ON ORIGINAL DRAWING.
0 1"

DATE	OCTOBER 2024
PROJ	D3698100
DWG	40-S-201
SHEET	65 of 145

BID DOCUMENTS

©JACOBS 2024. ALL RIGHTS RESERVED.

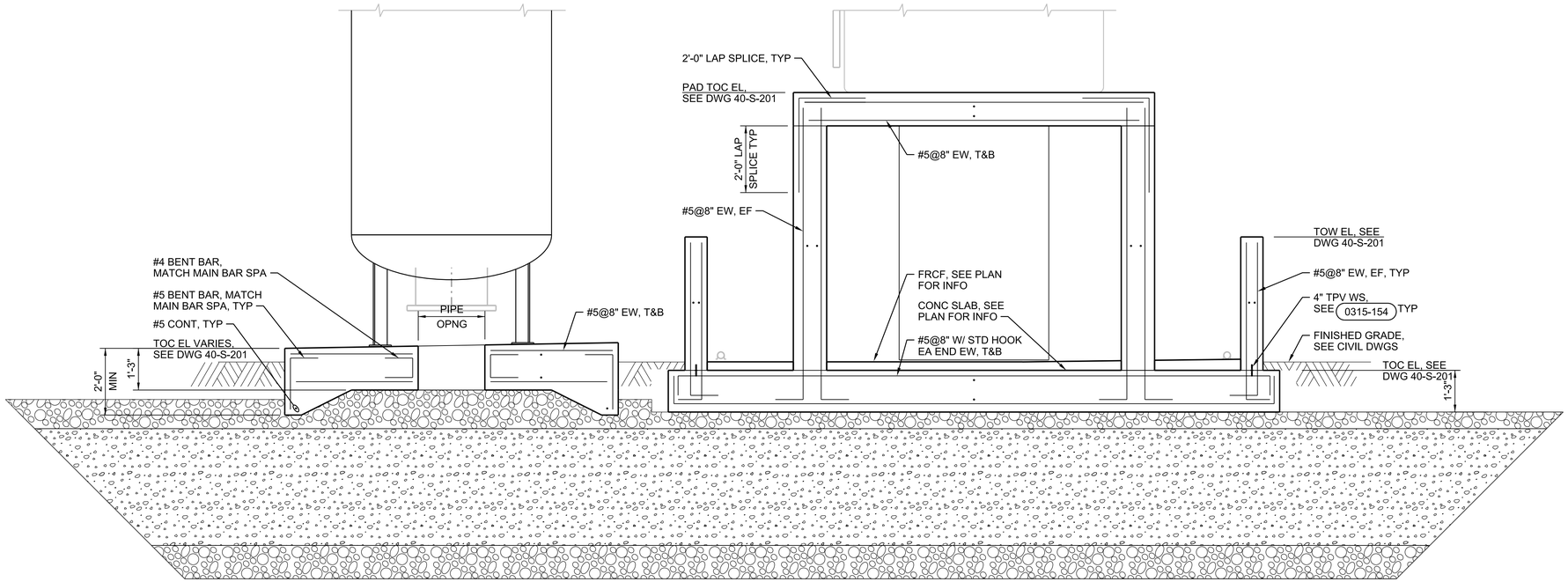

A SECTION
1/2"=1'-0"
40-S-301

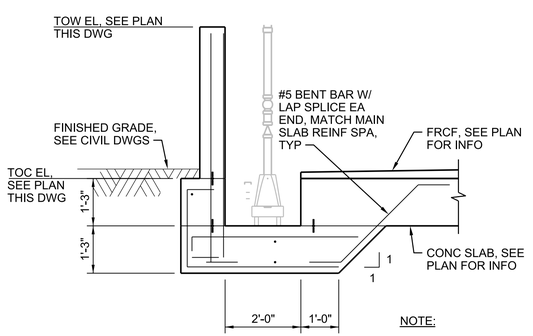

NOTE:

FOR ADDITIONAL INFORMATION, SEE A .

B SECTION
1/2"=1'-0"
40-S-301

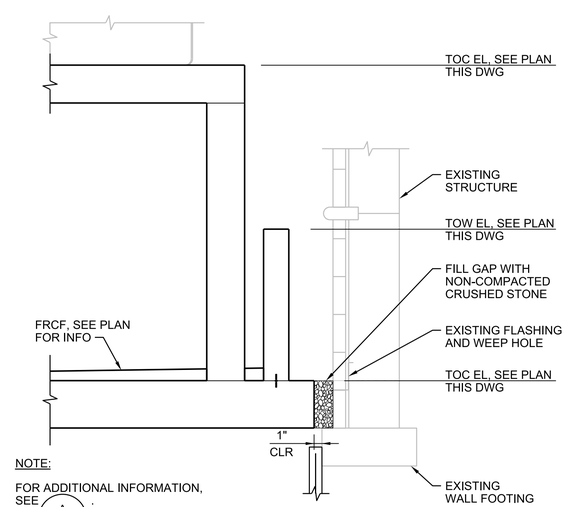

NOTE:

FOR ADDITIONAL INFORMATION, SEE A .

C SECTION
1/2"=1'-0"
40-S-301

GENERAL SHEET NOTE

1. SUBGRADE PREPARATION SHALL BE AS FOLLOWS AND IN ACCORDANCE WITH THE PROJECT'S GEOTECHNICAL REPORT AND GEOTECTNICAL ENGINEER RECOMMENDATIONS. COORDINATE SUBGRADE WORK WITH LOCATION OF EXISTING STRUCTURE.

   - PROVIDE SHORING AT FACE OF EXISTING STRUCTURE TO PROTECT SUBGRADE UNDER EXISTING STRUCTURE. SHORING TO BE LEFT IN PLACE.
   - UNDERCUT A MINIMUM OF 5 FEET BELOW THE BOTTOM FOUNDATION ELEVATION AND 5 FEET BEYOND FOUNDATION PERIMETER ON 3 SIDES.
   - GEOTECHNICAL ENGINEER TO VERIFY EXCAVATED SURFACE PRIOR TO ADDITIONAL WORK.
   - PLACE GEOGRID (E.G., TENSAR TX 160X OR ALTERNATE APPROVED BY GEOTECHNICAL ENGINEER) AT BASE OF EXCAVATION.
   - PLACE 12" MIN COMPACTED CRUSHED STONE (E.G., ALDOT NO. 825 TYPE 'B') ON GEOGRID.
   - PLACE STRUCTURAL FILL OR CRUSHED STONE IN 8" COMPACTED LIFTS.
   - PLACE 6" CRUSHED STONE AT BASE OF NEW FOUNDATIONS.

ALABAMA LICENSED No. 29827 PROFESSIONAL ENGINEER GARRICK DONNELL PETTY

Digitally signed by Garrick D Petty Petty
Date: 2024.10.29 14:08:09-04'00'

NO.	DATE	REVISION	BY	APVD

DSGN G PETTY | DR P KARABAN | CHK D EVERSON | APVD G PETTY

PAUL B. KREBS WATER TREATMENT PLANT
IMPROVEMENTS
ANNISTON WATER WORKS & SEWER BOARD
CITY OF ANNISTON, ALABAMA

Jacobs

STRUCTURAL
FLUORIDE AND SURGE TANK SECTIONS

REUSE OF DOCUMENTS: THIS DOCUMENT, AND THE IDEAS AND DESIGNS INCORPORATED HEREIN, AS AN INSTRUMENT OF PROFESSIONAL SERVICE, IS THE PROPERTY OF JACOBS AND IS NOT TO BE USED, IN WHOLE OR IN PART, FOR ANY OTHER PROJECT WITHOUT THE WRITTEN AUTHORIZATION OF JACOBS.

VERIFY SCALE
BAR IS ONE INCH ON ORIGINAL DRAWING.
0 1"

DATE	OCTOBER 2024
PROJ	D3698100
DWG	40-S-301
SHEET	66 of 145

BID DOCUMENTS

©JACOBS 2024. ALL RIGHTS RESERVED.

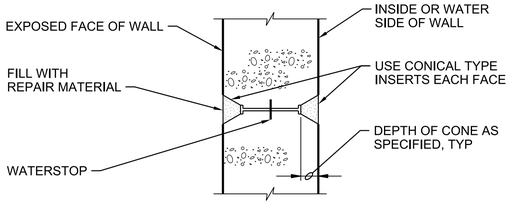

NOTE:

THE SPACING OF FORM TIES ON EXPOSED PORTIONS OF WALLS SHALL BE APPROXIMATELY EQUAL HORIZONTALLY AND VERTICALLY AND SHALL BE UNIFORM IN EACH DIRECTION.

FORM SNAP-TIE HOLE

NTS

0310-051

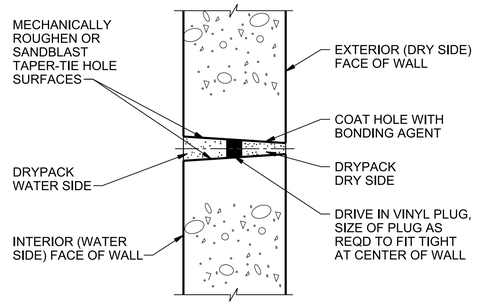

NOTE:

MINIMUM HOLE DIAMETER AT EXTERIOR FACE = 1". TAPER HOLE SO THAT MINIMUM HOLE DIAMETER AT INTERIOR FACE = 1 1/4"

CONSTRUCTION STEPS:

1. SANDBLAST OR MECHANICALLY ROUGHEN WITH ELECTRIC EQUIPMENT.
2. DRIVE IN VINYL PLUG.
3. COAT HOLE ON DRY SIDE OF PLUG AND WHILE BONDING AGENT IS TACKY, DRYPACK.
4. COAT HOLE ON WATER SIDE OF PLUG AND WHILE BONDING AGENT IS TACKY, DRYPACK.
5. USE CATEGORY II, NON-SHRINK GROUT AS SPECIFIED.

ALTERNATE FORM TIE-THROUGH BOLT

NTS

0310-052

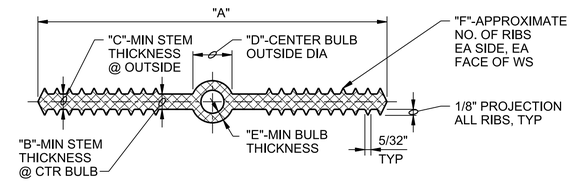

SIZE	"A"	"B"	"C"	"D"	"E"	"F"
4"x3/16"	4"	3/16"	3/16"	3/4"	1/4"	4
6"x3/8"	6"	3/8"	3/8"	7/8"	1/4"	6
9"x3/8"	9"	3/8"	3/8"	1"	1/4"	8

NOTES:

1. NON-ROUND CENTER BULBS SHALL HAVE A MINIMUM OUTSIDE DIMENSION OF 'D'.
2. SEE SPLICE DETAIL 0315-011
3. BULB TYPE WATERSTOP SHOWN IS REQUIRED FOR EXPANSION AND CONTROL JOINTS. SIMILAR WATERSTOPS WITHOUT CENTER BULB MAY BE SUBSTITUTED AT CONSTRUCTION JOINTS.
4. USE 6 INCH WATERSTOPS IN ALL CONSTRUCTION JOINTS UNLESS SPECIFICALLY SHOWN OTHERWISE.

PLASTIC WATERSTOP

NTS

0315-001

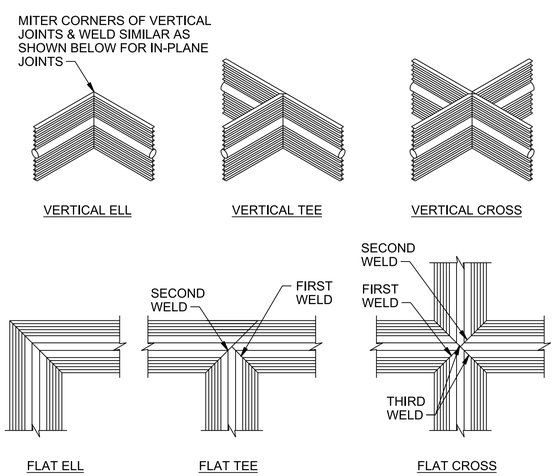

NOTE:

ALL WELDS SHALL BE PER WATERSTOP MANUFACTURER'S RECOMMENDATIONS.

WATERSTOP JOINTS

NTS

0315-011

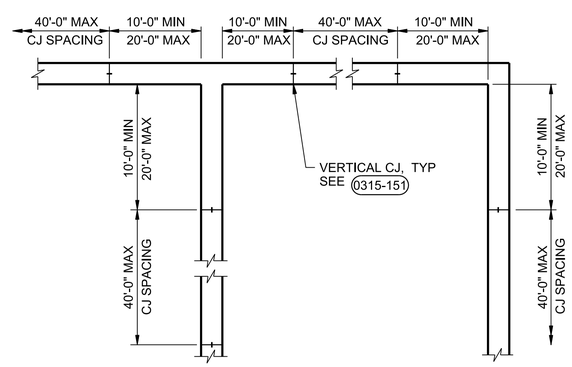

PLAN

NOTES:

1. COORDINATE CONSTRUCTION JOINT LOCATIONS AND TIME BETWEEN CONCRETE POURS WITH SPECIFICATION 03 30 00.
2. LOCATE WALL CONSTRUCTION JOINTS AS SHOWN, UNLESS INDICATED OTHERWISE.

WALL CONSTRUCTION JOINT SPACING

NTS

0315-131

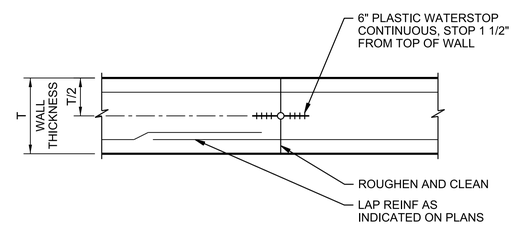

PLAN

NOTES:

1. ALL REINFORCEMENT CONTINUOUS ACROSS JOINT.
2. FOR LOCATIONS, SEE 0315-131

WALL VERTICAL CONSTRUCTION JOINT

NTS

0315-151

ALABAMA LICENSED No. 29827 PROFESSIONAL ENGINEER GARRICK DONNELL PETTY

Digitally signed by Garrick D Petty Petty
Date: 2024.10.29 14:58:09 -04'00'

NO.	DATE	REVISION	BY	APVD
DSGN	G PETTY	DR P KARABAN	CHK D EVERSON	APVD G PETTY

PAUL B. KREBS WATER TREATMENT PLANT IMPROVEMENTS
ANNISTON WATER WORKS & SEWER BOARD
CITY OF ANNISTON, ALABAMA

Jacobs

STRUCTURAL
STANDARD DETAILS

REUSE OF DOCUMENTS: THIS DOCUMENT, AND THE IDEAS AND DESIGNS INCORPORATED HEREIN, AS AN INSTRUMENT OF PROFESSIONAL SERVICE, IS THE PROPERTY OF JACOBS AND IS NOT TO BE USED, IN WHOLE OR IN PART, FOR ANY OTHER PROJECT WITHOUT THE WRITTEN AUTHORIZATION OF JACOBS.

VERIFY SCALE
BAR IS ONE INCH ON ORIGINAL DRAWING.
0 1"

DATE	OCTOBER 2024
PROJ	D3698100
DWG	99-S-501
SHEET	67 of 145

BID DOCUMENTS

©JACOBS 2024. ALL RIGHTS RESERVED.

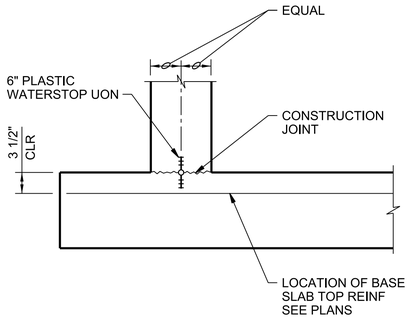

NOTES:

1. FOR WALLS WITH SINGLE MAT OF REINFORCING LOCATE WATERSTOP ON LIQUID FACE, 1" CLEAR OF REINFORCEMENT.
2. SECURE WATERSTOP IN-PLACE AS SPECIFIED.

WALL BASE CONSTRUCTION JOINT

NTS

0315-154

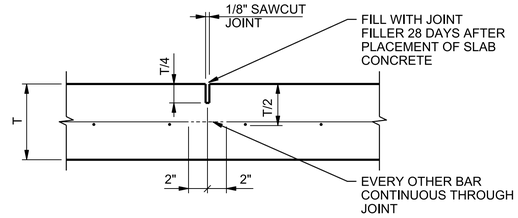

SINGLE REINFORCEMENT MAT

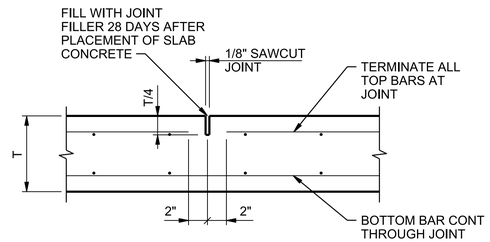

DOUBLE REINFORCEMENT MAT

NOTES:

1. CONTRACTOR SHALL USE STRING LINE OR OTHER POSITIVE MEANS TO PLACE REINFORCEMENT AND LOCATE SAWCUT.

BUILDING SLAB ON GRADE SAWN CONTROL JOINT

NTS

0315-192

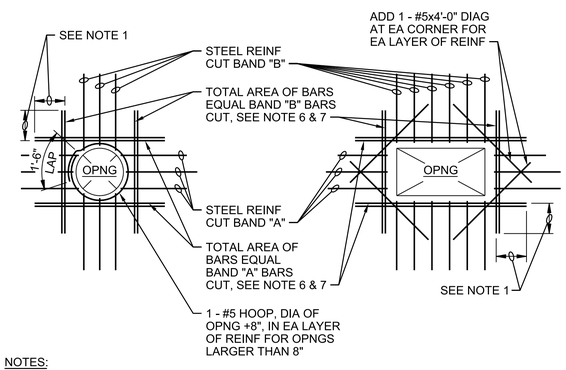

NOTES:

1. PROVIDE MINIMUM LAP, SEE GENERAL STRUCTURAL NOTES.
2. TYPICAL FOR ALL OPENINGS IN CONCRETE WALLS OF BELOW GRADE AND HYDRAULIC STRUCTURES AND ALL STRUCTURAL CONCRETE SLABS UNLESS INDICATED OTHERWISE ON PLANS.
3. DO NOT WELD REINFORCEMENT TO PIPE SLEEVES AND INSERTS.
4. PROVIDE A MINIMUM OF 2 "A" BARS AND 2 "B" BARS EACH SIDE OF OPENING (1 EACH FACE), INCLUDING DOWELS AND CORNER BARS, TYPICAL.
5. FOR OPENINGS LARGER THAN 8'-0", REINFORCE SAME AS FOR 8'-0" OPENINGS.
6. SPACE AT 3 BAR DIAMETERS (OR 3" MINIMUM) ON CENTER. LOCATE HALF OF TOTAL AREA ON EACH SIDE OF OPENING.
7. AT OPENINGS WITHIN 12" OF AN INTERSECTING WALL OR SLAB, PROVIDE ONLY THE EXTRA REINFORCEMENT WHICH WILL FIT, AT THE BAR SPACING IN NOTE 6.

OPENING REINFORCEMENT

NTS

0330-001

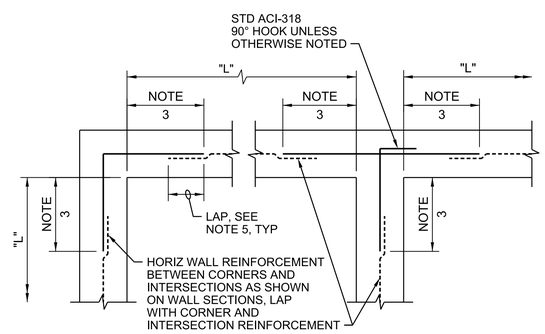

SINGLE REINFORCEMENT MAT

TYPICAL WALL CORNER & INTERSECTION REINFORCEMENT

NTS

DETAIL 1 OF 3

0330-003

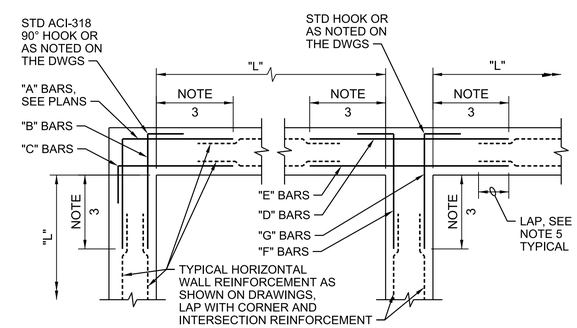

DOUBLE REINFORCEMENT MAT

TYPICAL WALL CORNER & INTERSECTION REINFORCEMENT

NTS

DETAIL 2 OF 3

0330-003

NO.	DATE	REVISION	BY	APVD

DSGN	G PETTY	CHK	D EVERSON
DR	G PETTY	CHK	P KARABAN

APVD G PETTY

ALABAMA LICENSED No. 29827 PROFESSIONAL ENGINEER GARRICK DONNELL PETTY

Digitally signed by Garrick D Petty Petty
Date: 2024.10.29 14:58:07 -04'00'

PAUL B. KREBS WATER TREATMENT PLANT IMPROVEMENTS
ANNISTON WATER WORKS & SEWER BOARD
CITY OF ANNISTON, ALABAMA

REUSE OF DOCUMENTS: THIS DOCUMENT, AND THE IDEAS AND DESIGNS INCORPORATED HEREIN, AS AN INSTRUMENT OF PROFESSIONAL SERVICE, IS THE PROPERTY OF JACOBS AND IS NOT TO BE USED, IN WHOLE OR IN PART, FOR ANY OTHER PROJECT WITHOUT THE WRITTEN AUTHORIZATION OF JACOBS.

Jacobs

STRUCTURAL

STANDARD DETAILS

BID DOCUMENTS

VERIFY SCALE
BAR IS ONE INCH ON ORIGINAL DRAWING.
0 1"

DATE	OCTOBER 2024
PROJ	D3698100
DWG	99-S-502
SHEET	68 of 145

©JACOBS 2024. ALL RIGHTS RESERVED.

NOTES:

1. TYPICAL HORIZONTAL WALL CORNER AND INTERSECTION REINFORCEMENT LAYOUT IS SHOWN TO AVOID CONGESTION AND PERMIT PROPER PLACEMENT, FOR SIZE AND SPACING SEE PLANS. ALL HORIZONTAL REINFORCEMENT AT CORNERS AND INTERSECTIONS SHALL BE FABRICATED AND INSTALLED WITH SPLICES LOCATED WHERE SHOWN REGARDLESS OF BAR SIZE AND SPACING.
2. WHERE THE CORNER OR INTERSECTION REINFORCEMENT SIZE AND SPACING IS NOT SHOWN, NOTED OR TABULATED ON THE PLANS, THE SIZE AND SPACING SHALL BE THE SAME AS THE WALL HORIZONTAL REINFORCEMENT SHOWN ON THE WALL SECTIONS OR AS NOTED FOR THE REINFORCEMENT BETWEEN THE CORNERS OR INTERSECTIONS.
3. EXCEPT WHERE OTHERWISE SHOWN ON THE DRAWINGS, THE LENGTH INDICATED AS "NOTE 3" SHALL BE THE LESSER OF L/4, 10 FEET, OR 1.0 TIMES THE HEIGHT OF THE WALL, EXCEPT THAT IN NO CASE SHALL IT BE LESS THAN A LAP LENGTH.
4. L = LENGTH OF WALL PARALLEL TO THE BAR LENGTH IN QUESTION.
5. EXCEPT WHERE OTHERWISE SHOWN ON THE DRAWINGS, THE LENGTH INDICATED AS "NOTE 5" SHALL BE EQUAL TO ONE "LAP LENGTH" AS REQUIRED BY THE GENERAL STRUCTURAL NOTES. USE THE LAP LENGTH AS REQUIRED FOR THE SMALLER OF THE TWO REINFORCEMENT BARS BEING SPLICED.
6. UNLESS OTHERWISE NOTED, "B" AND "C" BARS ARE THE SAME SIZE AND SPACING AND "F" AND "G" BARS ARE THE SAME SIZE AND SPACING.

TYPICAL WALL CORNER & INTERSECTION REINFORCEMENT

DETAIL 3 OF 3

0330-003

NTS

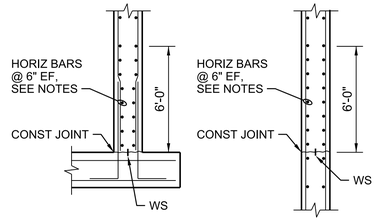

AT BASE SLAB

AT INTERMEDIATE CONSTRUCTION JOINT

NOTES:

1. PROVIDE HORIZONTAL BARS AT 6" SPACING EACH FACE IN THE FIRST 6'-0" ABOVE ALL HORIZONTAL WALL CONSTRUCTION JOINTS. WHERE TYPICAL WALL HORIZONTAL BARS ARE AT 12" SPACING, PROVIDE ADDITIONAL BARS FOR 6" SPACING.
2. HORIZONTAL BAR SIZE FOR THE 6'-0" ZONE SHALL BE THE TYPICAL WALL HORIZONTAL BAR SIZE SHOWN ON THE DRAWINGS OR THE MINIMUM BAR SIZE IN THE TABLE BELOW, WHICHEVER IS GREATER.

WALL THICKNESS (INCHES)	MINIMUM BAR SIZE
10	#5
12, 14	#6
16, 18, 20	#7
≥22	#8

3. PROVIDE CORNER BARS AT 6" SPACING EACH FACE TO LAP WITH THE BARS SHOWN ABOVE, SEE 0330-003.

REINFORCING AT HORIZONTAL CONSTRUCTION JOINT

0330-004

NTS

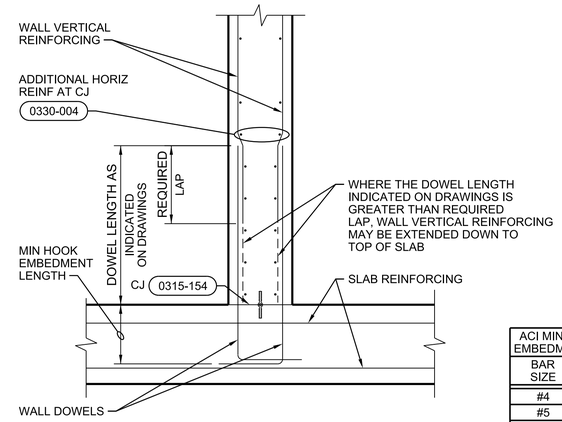

WALL SECTION

ACI MINIMUM HOOK EMBEDMENT LENGTH	
BAR SIZE	MIN EMBED
#4	7"
#5	9"
#6	11"
#7	12"
#8	14"
#9	16"
#10	17"

NOTE:

UNLESS NOTED OTHERWISE, ALL DOWEL HOOKS SHALL EXTEND TO AND BE TIED OFF TO BOTTOM MAT OF SLAB REINFORCING.

VERTICAL WALL REINFORCING / DOWEL PLACEMENT

0330-005

NTS

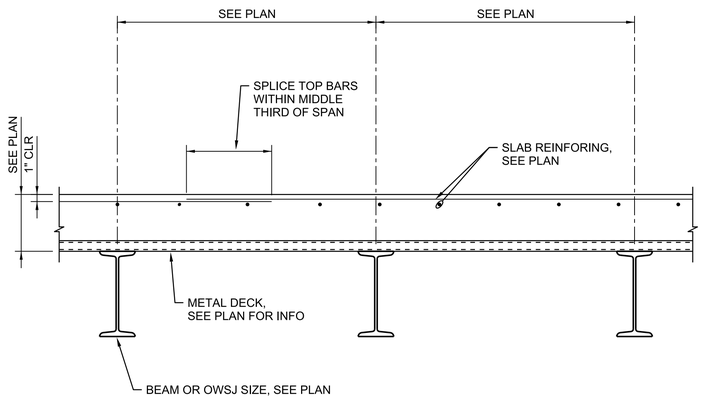

CONCRETE SLAB-ON-DECK REINFORCING

0330-007

NTS

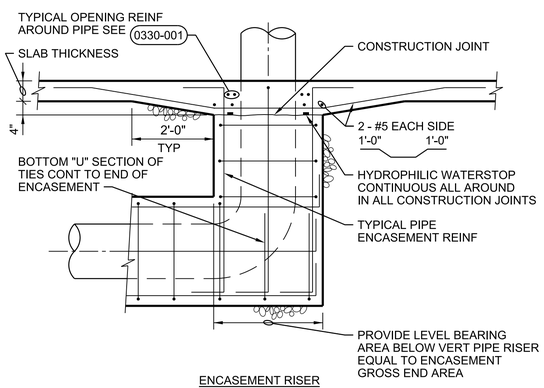

ENCASEMENT RISER

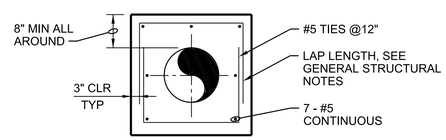

SECTION

NOTES:

1. SECTION APPLIES TO PIPES W/ DIAMETERS 18" AND SMALLER. FOR 20" DIAMETER PIPES AND LARGER, SEE 0330-017
2. WHEN PIPE ENCASEMENT IS CLOSER THAN 4" TO SLAB ABOVE, TIE SLAB & ENCASEMENT TOGETHER. SEE 0330-018

PIPE ENCASEMENT

0330-016

NTS

PIPE ENCASEMENT TABLE								
PIPE DIA (IN.)	H=10 FEET		H=20 FEET		H=30 FEET		H=40 FEET	
	T (in)	REINF	T (in)	REINF	T (in)	REINF	T (in)	REINF
20 THRU 30	8	#5@12"	10	#5@12"	10	#5@12"	10	#6@12"
36 THRU 42	10	#5@12"	10	#6@12"	10	#7@12"	10	#6@6"
48 THRU 54	10	#6@12"	10	#7@12"	10	#7@6"	12	#7@6"
UP TO 60	10	#6@12"	10	#6@6"	14	#7@6"	14	#7@6"

HEAVY DARK LINE INDICATES BREAK BETWEEN ONE LAYER OF REINFORCEMENT AND TWO. SEE NOTE 2.

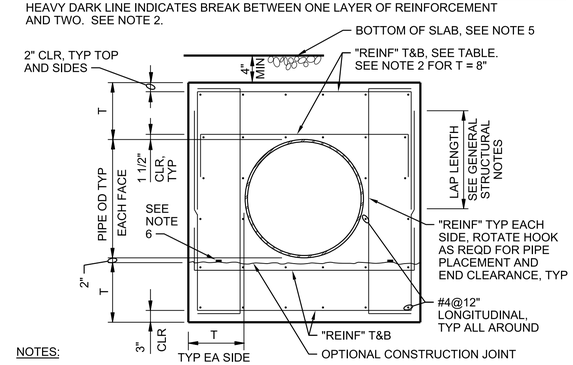

NOTES:

1. THIS DETAIL APPLIES TO PIPE DIAMETER OF 20" AND LARGER. FOR SMALLER THAN 20", SEE DETAIL 0330-016.
2. FOR T=8" REINFORCEMENT SHALL BE ONE LAYER AND CENTERED IN SLABS OR WALLS. SIM 0330-016.
3. FOR ENCASEMENT AT PIPE RISER, SEE 0330-016.
4. "H" IS FILL HEIGHT OR WATER DEPTH OR COMBINATION ABOVE PIPE.
5. WHEN PIPE ENCASEMENT CLOSER THAN 4" TO SLAB ABOVE, TIE SLAB & ENCASEMENT TOGETHER. SEE 0330-018.
6. HYDROPHILIC WATERSTOP CONTINUOUS ALL AROUND IN ALL CONSTRUCTION JOINTS.

PIPE ENCASEMENT

0330-017

NTS

ALABAMA LICENSED No. 29827 PROFESSIONAL ENGINEER GARRICK DONNELL PETTY

Digitally signed by Garrick D Petty Petty
Date: 2024.10.29 14:08:13 -04'00'

NO.	DATE	REVISION	BY	APVD

DSGN G PETTY | DR P KARABAN | CHK D EVERSON | APVD G PETTY

PAUL B. KREBS WATER TREATMENT PLANT IMPROVEMENTS
ANNISTON WATER WORKS & SEWER BOARD
CITY OF ANNISTON, ALABAMA

REUSE OF DOCUMENTS: THIS DOCUMENT, AND THE IDEAS AND DESIGNS INCORPORATED HEREIN, AS AN INSTRUMENT OF PROFESSIONAL SERVICE, IS THE PROPERTY OF JACOBS AND IS NOT TO BE USED, IN WHOLE OR IN PART, FOR ANY OTHER PROJECT WITHOUT THE WRITTEN AUTHORIZATION OF JACOBS.

Jacobs

STRUCTURAL

STANDARD DETAILS

VERIFY SCALE
BAR IS ONE INCH ON ORIGINAL DRAWING.
0 1"

DATE	OCTOBER 2024
PROJ	D3698100
DWG	99-S-503
SHEET	69 of 145

BID DOCUMENTS

©JACOBS 2024. ALL RIGHTS RESERVED.

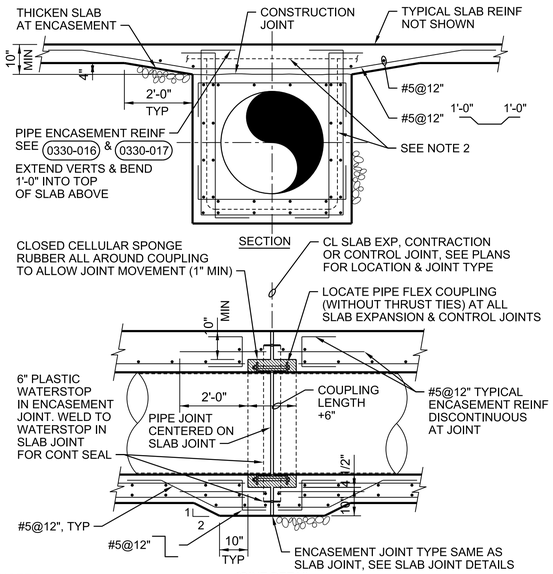

NOTES:

1. TIE PIPE ENCASEMENT TO SLAB AS SHOWN WHEN DISTANCE BETWEEN PIPE ENCASEMENT AND BOTTOM OF SLAB IS LESS THAN 4".
2. 6" PLASTIC WS IN ENCASEMENT JOINTS. WELD TO WS IN SLAB JOINTS.

PIPE ENCASEMENT AT SLAB

NTS

0330-018

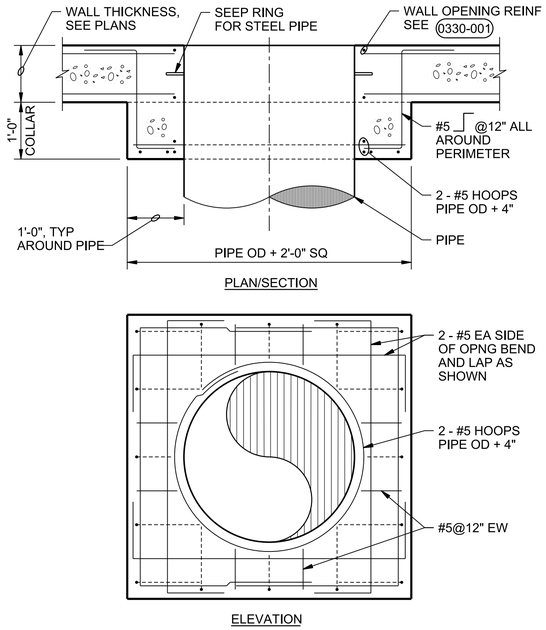

PIPE COLLAR

NTS

0330-021

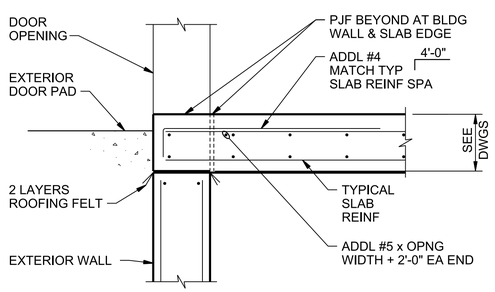

SLAB AT DOOR OPENING

NTS

0330-041

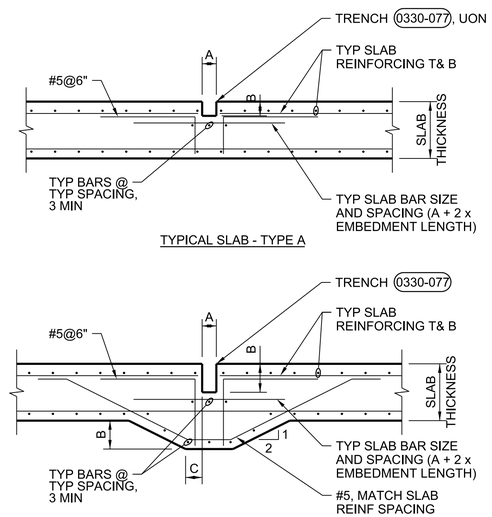

DIMENSIONS:

A = TRENCH WIDTH:	SEE PLANS
B = TRENCH DEPTH:	SEE PLANS
C = 6" WHEN:	A < 1'-0"
C = 1'-0" WHEN:	A ≥ 1'-0"

TRENCH REINFORCING

NTS

0330-043

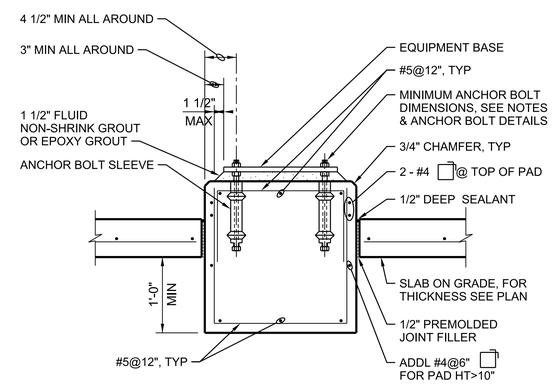

GENERAL NOTE:
FOR GENERAL NOTES SEE DETAIL 5 OF 5.

CONCRETE EQUIPMENT PAD - TYPE 'D'

NTS

DETAIL 1 OF 5

0330-056

ALABAMA LICENSED No. 29827 PROFESSIONAL ENGINEER GARRICK DONNELL PETTY

Digitally signed by Garrick D Petty
Garrick D Petty
Date: 2024.10.29 14:08:14 -04'00'

NO.	DATE	REVISION	BY	APVD

DSGN G PETTY | DR P KARABAN | CHK D EVERSON | APVD G PETTY

REUSE OF DOCUMENTS: THIS DOCUMENT, AND THE IDEAS AND DESIGNS INCORPORATED HEREIN, AS AN INSTRUMENT OF PROFESSIONAL SERVICE, IS THE PROPERTY OF JACOBS AND IS NOT TO BE USED, IN WHOLE OR IN PART, FOR ANY OTHER PROJECT WITHOUT THE WRITTEN AUTHORIZATION OF JACOBS.

PAUL B. KREBS WATER TREATMENT PLANT
IMPROVEMENTS
ANNISTON WATER WORKS & SEWER BOARD
CITY OF ANNISTON, ALABAMA

Jacobs

STRUCTURAL
STANDARD DETAILS

VERIFY SCALE
BAR IS ONE INCH ON ORIGINAL DRAWING.
0 1"

DATE	OCTOBER 2024
PROJ	D3698100
DWG	99-S-504
SHEET	70 of 145

BID DOCUMENTS

FILENAME:99-S-504_D3698100.dgn PLOT DATE: 10/22/2024 PLOT TIME: 1:04:25 PM

©JACOBS 2024. ALL RIGHTS RESERVED.

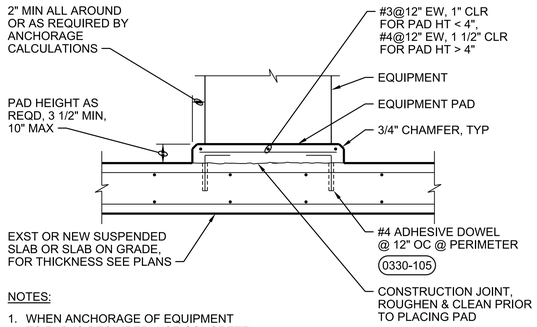

NOTES:

1. WHEN ANCHORAGE OF EQUIPMENT TO PAD IS REQUIRED, USE CONCRETE ANCHORS SPECIFIED.
2. CONCRETE PADS FOR ELECTRICAL EQUIPMENT SHALL BE 3 1/2" HIGH, UNLESS NOTED OTHERWISE.

TYPE 'E'

GENERAL NOTE:
FOR GENERAL NOTES SEE DETAIL 5 OF 5.

DETAIL 2 OF 5

CONCRETE EQUIPMENT PAD - TYPE 'E'

0330-056

NTS

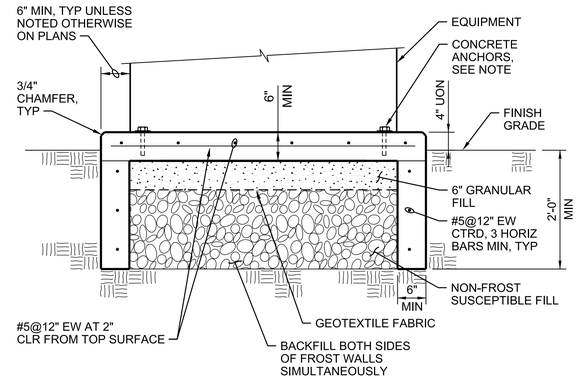

NOTE:

WHEN ANCHORAGE OF EQUIPMENT TO PAD IS REQUIRED, USE CONCRETE ANCHORS SPECIFIED.

TYPE 'G'

GENERAL NOTE:
FOR GENERAL NOTES SEE DETAIL 5 OF 5.

DETAIL 3 OF 5

CONCRETE EQUIPMENT PAD - TYPE 'G'

0330-056

NTS

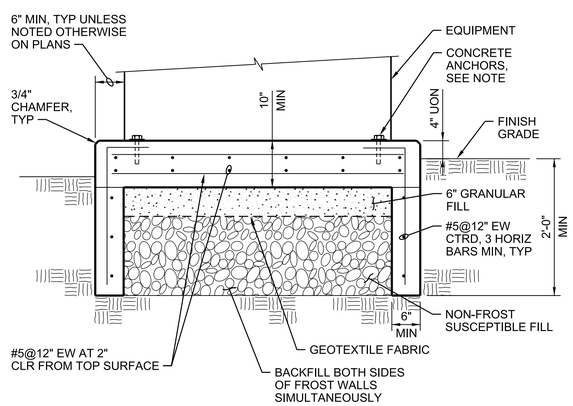

NOTE:

WHEN ANCHORAGE OF EQUIPMENT TO PAD IS REQUIRED, USE CONCRETE ANCHORS SPECIFIED.

TYPE 'H'

GENERAL NOTE:
FOR GENERAL NOTES SEE DETAIL 5 OF 5.

DETAIL 4 OF 5

CONCRETE EQUIPMENT PAD - TYPE 'H'

0330-056

NTS

NOTES:

1. PAD SIZE SHALL BE MINIMUM INDICATED OR AS SHOWN ON THE PLANS OR AS INDICATED BY THE MANUFACTURER AND APPROVED BY THE ENGINEER.
2. THE SIZE, NUMBER, TYPE, LOCATION, AND THREAD PROJECTION OF THE ANCHOR BOLTS SHALL BE DETERMINED BY THE EQUIPMENT MANUFACTURER AND AS APPROVED BY THE ENGINEER. ANCHOR BOLTS SHALL BE HELD IN POSITION WITH A TEMPLATE OR OTHER ACCEPTABLE MEANS, MATCHING THE BASE PLATE, WHILE PAD IS BEING PLACED.
3. ANCHOR BOLT SLEEVES SHALL BE USED TO PROVIDE MINIMUM ANCHOR BOLT MOVEMENT OF 1/2" IN ALL HORIZONTAL DIRECTIONS. THE MINIMUM SLEEVE LENGTH SHALL BE 8 TIMES THE BOLT DIAMETER.
4. ANCHOR BOLT SLEEVES SHALL HAVE A MINIMUM INTERNAL DIAMETER 1" GREATER THAN BOLT DIAMETER AND A MAXIMUM INTERNAL DIAMETER 3" GREATER THAN ANCHOR BOLT DIAMETER. SLEEVES SHALL BE FILLED WITH NON-SHRINK GROUT AFTER BOLTS ARE ALIGNED. SEE 0330-057.
5. EQUIPMENT BASES SHALL BE INSTALLED LEVEL UNLESS INDICATED OTHERWISE.
6. WEDGES, SHIMS, OR LEVELING NUTS SHALL BE USED TO SUPPORT THE BASE WHILE THE GROUT IS PLACED. WEDGES OR SHIMS SHALL BE REMOVED AFTER GROUT IS SET AND PACK VOID WITH GROUT.
7. HEIGHT OF PADS SHALL BE MINIMUM REQUIRED FOR ANCHOR BOLT CLEARANCE TO KEEP ANCHOR BOLT ABOVE SUPPORTING SLAB (SEE TABLE BELOW). WHERE EQUIPMENT OR PIPING ELEVATION REQUIRE A PAD HEIGHT LESS THAN THE MINIMUM SHOWN, USE TYPE "B" EQUIPMENT PAD WITH BLOCKOUT.
8. TYPE "D" PAD SHALL BE USED ONLY WHERE SPECIFICALLY INDICATED. PLACE THE SURROUNDING FLOOR SLAB AFTER THE EQUIPMENT PAD.
9. AT CONTRACTOR'S OPTION, CONCRETE ANCHORS MAY BE USED IN LIEU OF CAST-IN-PLACE ANCHOR BOLTS FOR EQUIPMENT ANCHOR BOLTS LESS THAN 3/4" DIAMETER WHEN APPROVED BY THE EQUIPMENT MANUFACTURER AND APPROVED BY THE ENGINEER. ANCHORS SHALL BE INSTALLED WITH 4" MINIMUM EDGE DISTANCE IN EACH DIRECTION.

AB DIA (IN.)	1/2	5/8	3/4	7/8	1	1 1/4	1 3/8	1 1/2	1 3/4	2
MIN PAD HT (IN.)	7	8 1/2	10	11	12 1/2	15	16 1/2	18	21	24

DETAIL 5 OF 5

CONCRETE EQUIPMENT PAD - NOTES

0330-056

NTS

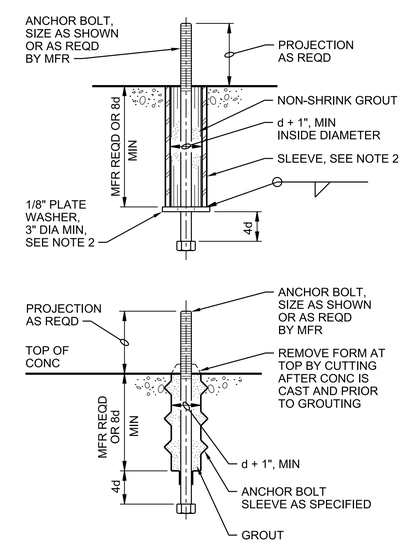

MACHINERY ANCHOR BOLT DETAIL

NOTES:

1. FOR CONCRETE EQUIPMENT PAD DETAILS AND NOTES NOT SHOWN SEE 0330-056
2. MATERIAL TO MATCH BOLT.

DETAIL 1 OF 2

ANCHOR BOLT DETAILS

0330-057

NTS

ALABAMA LICENSED No. 29827 PROFESSIONAL ENGINEER GARRICK DONNELL PETTY

Digitally signed by Garrick D Petty Petty
Date: 2024.10.29 14:58:19 -04'00'

NO.	DATE	REVISION	BY	APVD

DSGN G PETTY | DR P KARABAN | CHK D EVERSON | APVD G PETTY

PAUL B. KREBS WATER TREATMENT PLANT
IMPROVEMENTS
ANNISTON WATER WORKS & SEWER BOARD
CITY OF ANNISTON, ALABAMA

Jacobs

STRUCTURAL

STANDARD DETAILS

REUSE OF DOCUMENTS: THIS DOCUMENT, AND THE IDEAS AND DESIGNS INCORPORATED HEREIN, AS AN INSTRUMENT OF PROFESSIONAL SERVICE, IS THE PROPERTY OF JACOBS AND IS NOT TO BE USED, IN WHOLE OR IN PART, FOR ANY OTHER PROJECT WITHOUT THE WRITTEN AUTHORIZATION OF JACOBS.

BID DOCUMENTS

VERIFY SCALE
BAR IS ONE INCH ON ORIGINAL DRAWING.
0 1"

DATE	OCTOBER 2024
PROJ	D3698100
DWG	99-S-505
SHEET	71 of 145

©JACOBS 2024. ALL RIGHTS RESERVED.

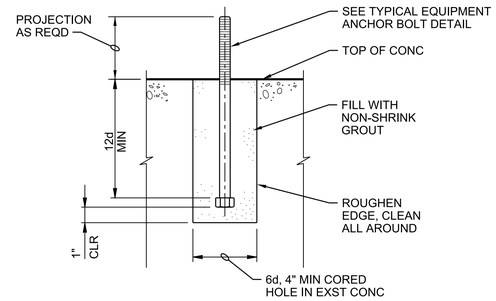

ANCHOR BOLT RETROFIT

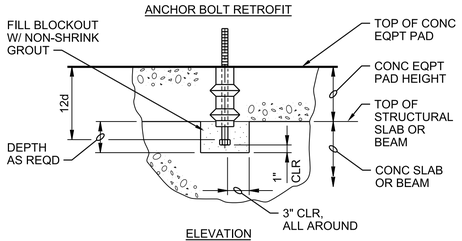

ELEVATION

ANCHOR BOLT BLOCKOUT

NOTES:

1. FOR CONCRETE EQUIPMENT PAD DETAILS AND NOTES NOT SHOWN SEE 0330-056
2. MATERIAL TO MATCH BOLT.

DETAIL 2 OF 2

ANCHOR BOLT DETAILS

NTS

0330-057

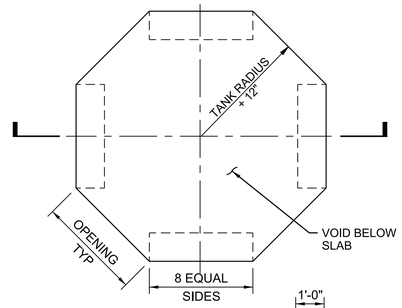

PLAN

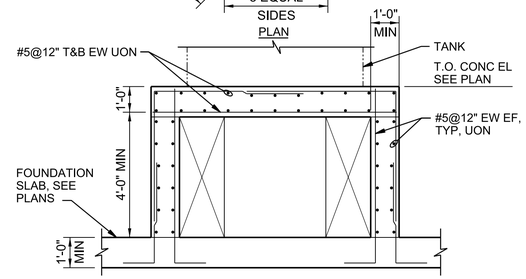

SECTION

NOTES:

1. FOR CONCRETE EQUIPMENT PAD NOTES SEE 0330-056
2. FOR ANCHOR BOLTS SEE 0330-057

TANK PAD

NTS

0330-058

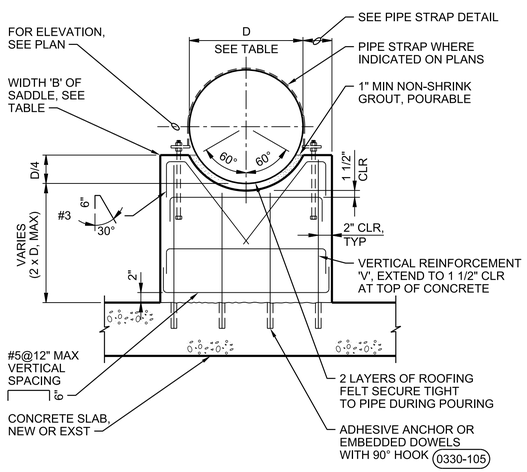

TYPE 'A' SADDLE

DETAIL 1 OF 3

PIPE SUPPORT - CONCRETE SADDLE

NTS

0330-061

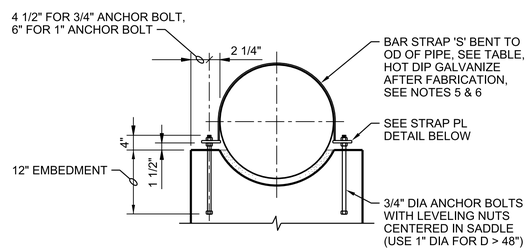

PIPE STRAP

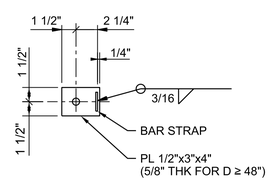

PLAN

PIPE STRAP PLATE

DETAIL 2 OF 3

PIPE SUPPORT - CONCRETE SADDLE

NTS

0330-061

PIPE SADDLE TABLE

PIPE DIAMETER D	SADDLE WIDTH B	LAYERS OF REINFORCEMENT	VERTICAL REINFORCEMENT V	PIPE STRAP SIZE S	NO. OF STRAPS
D ≤ 12"	9"	1 (CTRD)	#5@12"	3/16"x2"	1
12" < D ≤ 24"	9"	1 (CTRD)	#5@12"	3/16"x2 1/2"	1
24" < D ≤ 36"	10"	2 (EF)	#5@12"	1/4"x2"	1
36" < D ≤ 48"	12"	2 (EF)	#5@12"	1/4"x3"	1
48" < D ≤ 60"	16"	2 (EF)	#6@12"	3/8"x3"	2
60" < D ≤ 72"	18"	2 (EF)	#6@12"	3/8"x3"	2

TYPE 'B' PIPE SADDLE FOOTING TABLE

PIPE DIAMETER D	FOOTING WIDTH W	REINFORCEMENT A	FOOTING DEPTH C
D ≤ 12"	1'-6"	#5@12"	2'-0"
12" < D ≤ 24"	2'-0"	#5@12"	2'-0"
24" < D ≤ 36"	3'-0"	#5@12"	2'-0"
36" < D ≤ 48"	4'-0"	#5@12"	2'-0"
48" < D ≤ 60"	6'-0"	#5@6"	2'-0"
60" < D ≤ 72"	8'-0"	#5@6"	2'-0"

NOTES:

1. FOR 'B'=10" OR THICKER, USE 2 LAYERS OF REINFORCEMENT, TURN HORIZONTAL BARS 90° TO HOOK AROUND VERTICALS , 1 1/2" COVER.
2. FORM 3/4" BEVEL ON ALL EXPOSED CORNERS OF SUPPORT.
3. USE TYPE 'A' SADDLE IN ALL LOCATIONS WHERE A SLAB (NEW OR EXISTING) OCCURS. USE TYPE 'B' IN OTHER LOCATIONS.
4. FOR LOCATIONS WHERE PIPE STRAP IS REQUIRED, REFER TO DRAWINGS. UNLESS INDICATED OTHERWISE A STRAP IS NOT REQUIRED.
5. AT SUBMERGED CONDITIONS, STRAP SHALL BE STAINLESS STEEL.
6. PROVIDE 3/4" x (STRAP WIDTH PLUS 1" WIDE) NEOPRENE PAD BETWEEN STRAP AND PIPE.

DETAIL 3 OF 3

PIPE SUPPORT - CONCRETE SADDLE

NTS

0330-061

ALABAMA LICENSED No. 29827 PROFESSIONAL ENGINEER GARRICK DONNELL PETTY

Digitally signed by Garrick D Petty Petty
Date: 2024.10.29 14:58:29 -04'00'

NO.	DATE	REVISION	BY	APVD

DSGN G PETTY | DR P KARABAN | CHK D EVERSON | APVD G PETTY

PAUL B. KREBS WATER TREATMENT PLANT IMPROVEMENTS
ANNISTON WATER WORKS & SEWER BOARD
CITY OF ANNISTON, ALABAMA

Jacobs

STRUCTURAL
STANDARD DETAILS

REUSE OF DOCUMENTS: THIS DOCUMENT, AND THE IDEAS AND DESIGNS INCORPORATED HEREIN, AS AN INSTRUMENT OF PROFESSIONAL SERVICE, IS THE PROPERTY OF JACOBS AND IS NOT TO BE USED, IN WHOLE OR IN PART, FOR ANY OTHER PROJECT WITHOUT THE WRITTEN AUTHORIZATION OF JACOBS.

VERIFY SCALE
BAR IS ONE INCH ON ORIGINAL DRAWING.
0 1"

DATE	OCTOBER 2024
PROJ	D3698100
DWG	99-S-506
SHEET	72 of 145

BID DOCUMENTS

©JACOBS 2024. ALL RIGHTS RESERVED.

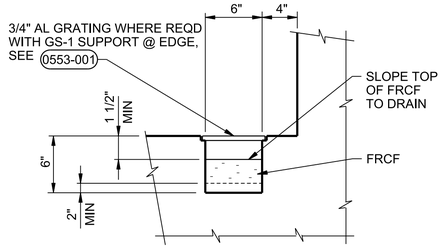

NOTES:

1. PROVIDE GRATING WHERE GUTTER CROSSES WALKWAY OR WORKING AREAS.
2. WHERE TRENCH IS ADJACENT TO WALL DO NOT PROVIDE GRATING UNLESS SPECIFICALLY SHOWN.

FORMED CONCRETE TRENCH

NTS

0330-077

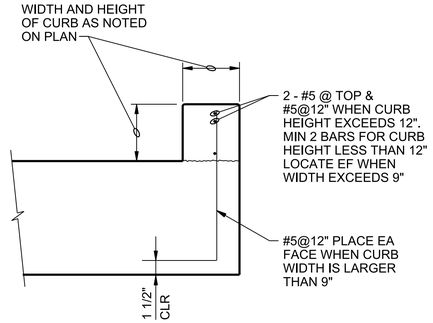

CONCRETE CURB

NTS

0330-080

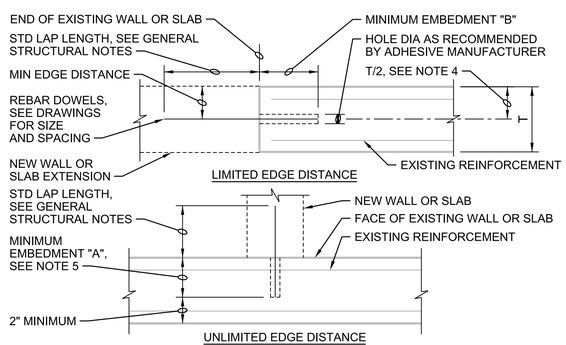

DOWEL SIZE	MINIMUM EDGE DISTANCE	MINIMUM EMBEDMENT "A"	MINIMUM EMBEDMENT "B"
#3	2 1/2"	5"	8"
#4	3 1/2"	7"	11"
#5	4"	8"	13"
#6	5"	10 1/2"	16"
#7	6"	12 1/2"	20"
#8	7"	14"	22"
#9	7 1/2"	15"	24"

NOTES:

1. CONFORM TO REQUIREMENTS OF SPECIFICATION SECTION 03 63 00, CONCRETE DOWELING.
2. FOLLOW ADHESIVE MANUFACTURER'S INSTRUCTIONS FOR INSTALLATION.
3. USE MINIMUM EMBEDMENTS SHOWN, EXCEPT USE MANUFACTURER'S MINIMUM RECOMMENDED EMBEDMENT IF GREATER.
4. LOCATE DOWELS CENTERED IN WALL OR SLAB UNLESS OTHERWISE NOTED ON DRAWINGS. WHERE 2 ROWS OF DOWELS INDICATED, STAGGER SPACING & LOCATE ALTERNATING DOWELS AT MINIMUM EDGE DISTANCE FROM OPPOSITE FACES.
5. PROVIDE MINIMUM EMBEDMENT "A" SHOWN IN TABLE UNLESS SHORTER EMBEDMENT DEPTH IS CALLED OUT ON DRAWINGS.

ADHESIVE DOWEL

NTS

0330-105

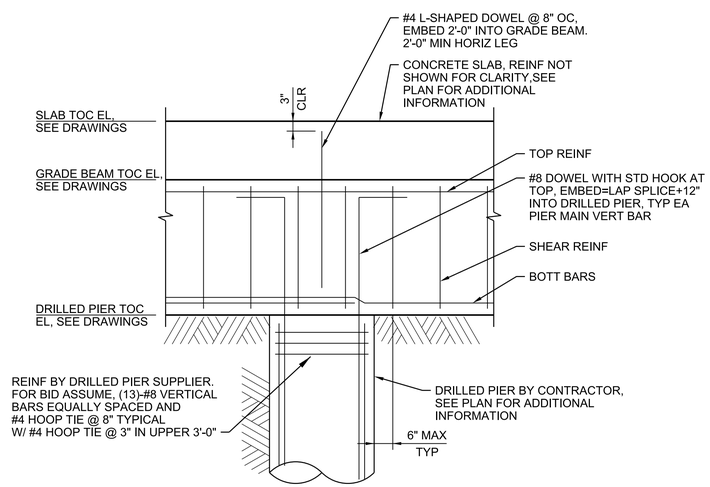

DETAIL 1 OF 3

GRADE BEAM AND DRILLED PIER

NTS

0330-414

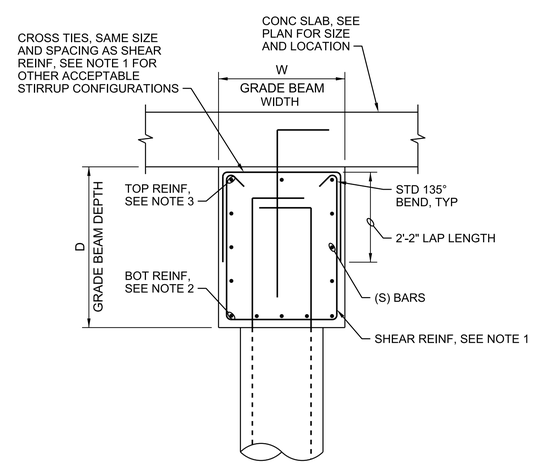

TYPICAL GRADE BEAM SECTION

DETAIL 2 OF 3

GRADE BEAM REINFORCEMENT

NTS

0330-414

ALABAMA LICENSED No. 29827 PROFESSIONAL ENGINEER GARRICK DONNELL PETTY

Digitally signed by Garrick D Petty Petty
Date: 2024.10.29 14:58:26-04'00'

NO.	DATE	REVISION	BY	APVD

DSGN	G PETTY	DR	P KARABAN	CHK	D EVERSON	APVD	G PETTY

PAUL B. KREBS WATER TREATMENT PLANT IMPROVEMENTS
ANNISTON WATER WORKS & SEWER BOARD
CITY OF ANNISTON, ALABAMA

Jacobs

STRUCTURAL

STANDARD DETAILS

REUSE OF DOCUMENTS: THIS DOCUMENT, AND THE IDEAS AND DESIGNS INCORPORATED HEREIN, AS AN INSTRUMENT OF PROFESSIONAL SERVICE, IS THE PROPERTY OF JACOBS AND IS NOT TO BE USED, IN WHOLE OR IN PART, FOR ANY OTHER PROJECT WITHOUT THE WRITTEN AUTHORIZATION OF JACOBS.

VERIFY SCALE
BAR IS ONE INCH ON ORIGINAL DRAWING.
0 1"

DATE	OCTOBER 2024
PROJ	D3698100
DWG	99-S-507
SHEET	73 of 145

BID DOCUMENTS

©JACOBS 2024. ALL RIGHTS RESERVED.

GRADE BEAM (GB#) NO. (SEE PLANS)	SIZE		TOP REINFORCING	BOTTOM REINF	S BARS	SHEAR REINF			REMARKS
	W	D	T	B		SIZE	TYPE	SPACING	
GB1	40"	30"	(8) #8	(7) #8	#6 (3 EF)	#4	CLOSED STIRRUPS	8" MAX	
GB2	40"	40"	(10) #8	(10) #8	#6 (3 EF)	#4	CLOSED STIRRUPS	8" MAX	
GB3	40"	30"	(8) #8	(7) #8	#6 (3 EF)	#4	CLOSED STIRRUPS	8" MAX	INCREASE CONCRETE COVER OF BOTH TOP AND BOTTOM BARS BY NATURALLY DRAPING BARS AT GRADE BEAM INTERSECTION.

NOTES:

1. CLOSED STIRRUPS MAY BE SINGLE PIECE CLOSED STIRRUPS ( ), TWO PIECE WITH CROSS TIE AS SHOWN ( ), OR AS SHOWN ON "TYPICAL SECTION".
2. LAP 'BOT' REINF AT DRILLED PIER LOCATIONS.
3. LAP 'TOP' REINF AT GRADE BEAM MID-SPAN BETWEEN DRILLED PIERS.

GRADE BEAM SCHEDULE

NTS

DETAIL 3 OF 3

0330-414

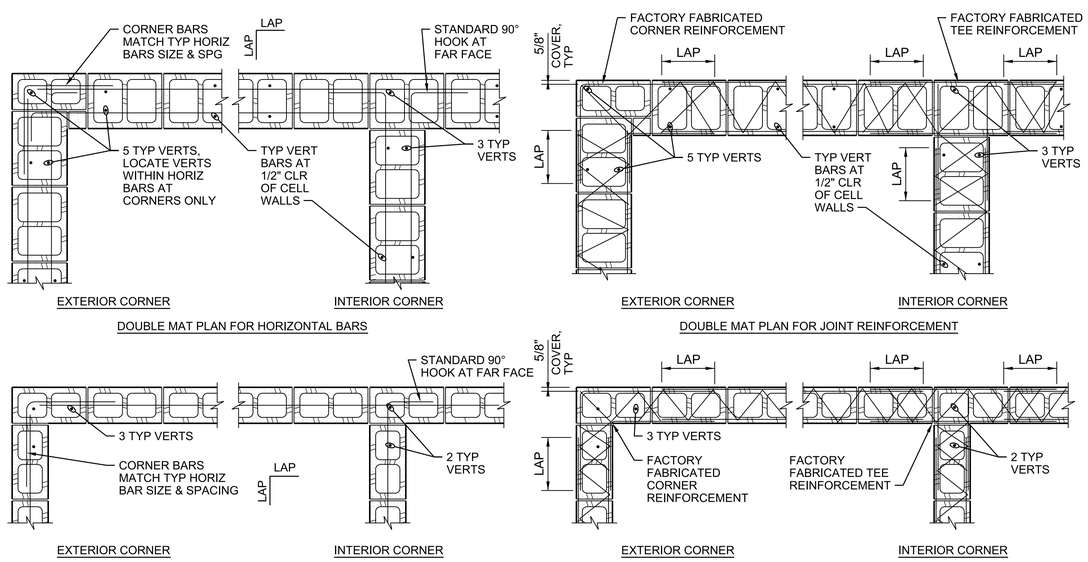

NOTES:

1. LAP = 1'-4" MINIMUM FOR JOINT REINFORCEMENT UNLESS NOTED OTHERWISE.
2. LAP=48 BAR DIAMETERS, BUT NOT LESS THAN 2'-0" FOR HORIZONTAL BARS UNLESS NOTED OTHERWISE.
3. AT OPENINGS, CONTROL JOINTS, OR CORNERS LESS THAN 6'-0" IN LENGTH, SEE DETAILS 0422-003, 0422-005 AND 0422-006.

REINFORCED MASONRY WALL CORNERS (SINGLE & DOUBLE MAT)

NTS

0422-001

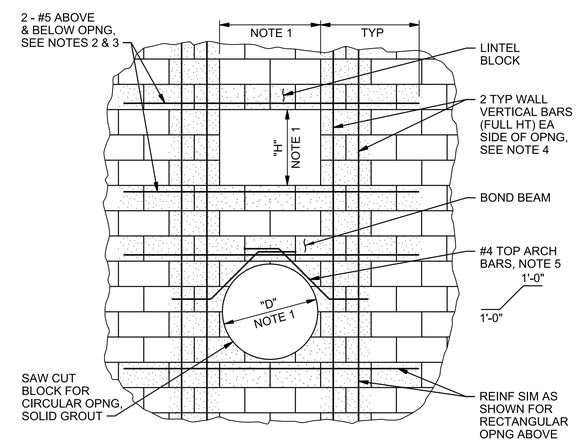

NOTES:

1. TYPICAL FOR ALL OPENINGS WITH (W, H, OR D) 2'-0" OR GREATER AND 4'-0" OR LESS, UNLESS NOTED OTHERWISE. SEE PLANS FOR LARGER OPENINGS.
2. AT ADJACENT OPENINGS WITH LESS THAN 8'-0" WALL BETWEEN, CONTINUE HORIZONTAL REINFORCEMENT TO 2'-8" BEYOND FURTHEST OPENING.
3. AT OPENINGS LOCATED WITHIN 2'-8" OF CORNER, CONTINUE HORIZONTAL REINFORCEMENT AROUND CORNER PER DETAIL 0422-001
4. LOCATE VERTICAL BARS CENTERED IN 2 ADJACENT CELLS IN 8" WALLS, AND EACH FACE IN SINGLE GROUT CELL IN 12" WALLS. LAP 48 BAR DIAMETERS WITH MATCHING FOUNDATION DOWELS.
5. LOCATE #4 ARCH BARS CENTERED IN 8" WALLS, AND EACH FACE IN 12" WALLS.

CMU OPENING REINFORCEMENT

NTS

0422-002

ALABAMA LICENSED No. 29827 PROFESSIONAL ENGINEER GARRICK DONNELL PETTY

Digitally signed by Garrick D Petty Petty
Date: 2024.10.29 14:08:30 -04'00'

NO.	DATE	REVISION	BY	APVD

DSGN G PETTY | DR P KARABAN | CHK D EVERSON | APVD G PETTY

REUSE OF DOCUMENTS: THIS DOCUMENT, AND THE IDEAS AND DESIGNS INCORPORATED HEREIN, AS AN INSTRUMENT OF PROFESSIONAL SERVICE, IS THE PROPERTY OF JACOBS AND IS NOT TO BE USED, IN WHOLE OR IN PART, FOR ANY OTHER PROJECT WITHOUT THE WRITTEN AUTHORIZATION OF JACOBS.

PAUL B. KREBS WATER TREATMENT PLANT
IMPROVEMENTS
ANNISTON WATER WORKS & SEWER BOARD
CITY OF ANNISTON, ALABAMA

Jacobs

STRUCTURAL

STANDARD DETAILS

VERIFY SCALE
BAR IS ONE INCH ON ORIGINAL DRAWING.
0 1"

DATE	OCTOBER 2024
PROJ	D3698100
DWG	99-S-508
SHEET	74 of 145

BID DOCUMENTS

FILENAME:99-S-508_D3698100.dgn PLOT DATE: 10/22/2024 PLOT TIME: 12:54:38 PM

©JACOBS 2024. ALL RIGHTS RESERVED.

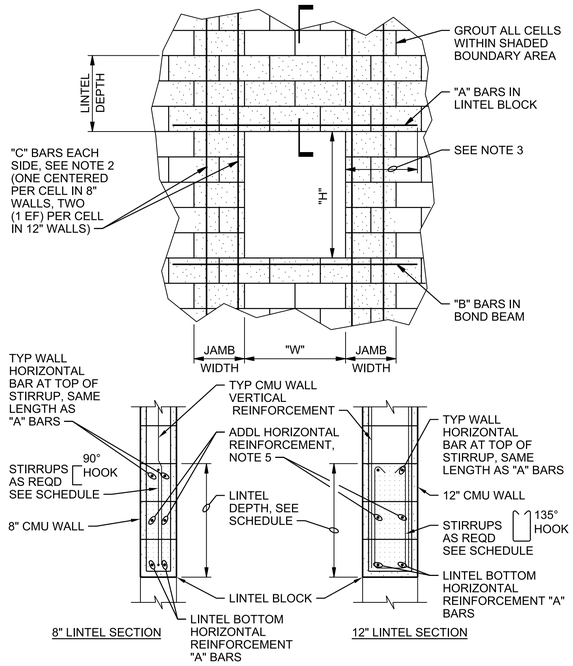

NOTE:

1. FOR 'A', 'B', AND 'C' BARS SEE SCHEDULE, UON ON DWGS.

DETAIL 1 OF 2

CMU OPENING REINFORCEMENT

NTS

0422-003

CMU OPENING REINFORCEMENT SCHEDULE						
8" WALLS						
W	LINTEL DEPTH	STIRRUP SIZE, SPG	"A" BARS	"B" BARS	"C" BARS	JAMB WIDTH
≤2'-8"	8"	-	1	1	1	8"
>2'-8"≤4'-0"	16"	-	2	1	1	8"
>4'-0"≤6'-0"	24"	#3@8"	2	1	2	16"
>6'-0"≤8'-0"	32"	#3@16"	2	2	3	24"
>8'-0"≤10'-0"	48"	#3@24"	2	2	3	24"
>10'-0"≤12'-0"	56"	#3@24"	2	2	4	30"
12" WALLS						
W	LINTEL DEPTH	STIRRUP SIZE, SPG	"A" BARS	"B" BARS	"C" BARS	JAMB WIDTH
≤2'-8"	8"	-	2	2	2	8"
>2'-8"≤4'-0"	16"	-	2	2	2	8"
>4'-0"≤6'-0"	24"	#3@8"	2	2	4	16"
>6'-0"≤8'-0"	32"	#3@16"	2	2	6	24"
>8'-0"≤10'-0"	48"	#3@24"	2	2	6	24"
>10'-0"≤12'-0"	56"	#3@24"	2	2	4	30"

NOTES:

1. USE BAR QUANTITIES AND SIZES GIVEN IN LINTEL SCHEDULE UNLESS OTHERWISE NOTED ON THE DRAWINGS.
2. EXTEND "C" BARS 48 BAR DIAMETERS, BUT NOT LESS THAN 2'-0" BEYOND TOP AND BOTTOM OF OPENING EXCEPT THAT WHEN "H" OR "W" EXCEEDS 2'-0", "C" BARS SHALL EXTEND FULL HEIGHT.
3. "A" AND "B" BARS SHALL EXTEND 48 BAR DIAMETERS, BUT NOT LESS THAN 2'-0" EACH SIDE OF THE OPENINGS. WHERE THERE IS LESS THAN 8'-0" BETWEEN ADJACENT OPENINGS, EXTEND REINFORCEMENT CONTINUOUS TO 2'-8" BEYOND FURTHEST OPENING.
4. FOR BAR SIZES, MATCH TYPICAL WALL REINFORCEMENT AS SHOWN ON THE BUILDING WALL SECTIONS.
5. FOR LINTEL DEPTHS EQUAL TO OR GREATER THAN 48" PROVIDE ADDITIONAL LAYER OF HORIZONTAL REINFORCEMENT AT 12" FROM BOTTOM OF LINTEL. MATCH SIZE OF TYPICAL WALL HORIZONTAL REINFORCEMENT. MINIMUM 1 BAR EACH FACE AT EACH COURSE BETWEEN TOP AND BOTTOM LINTEL COURSE.

DETAIL 2 OF 2

CMU OPENING REINFORCEMENT

NTS

0422-003

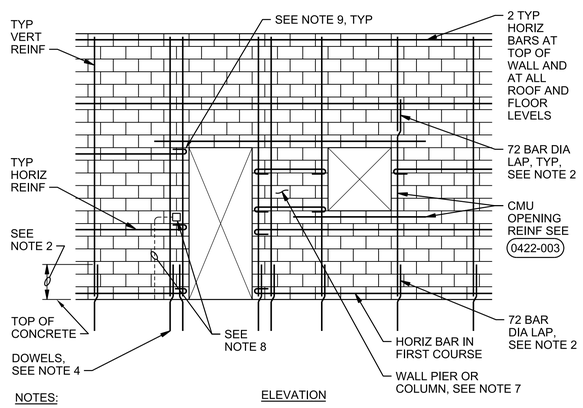

ELEVATION

NOTES:

1. FOR TYPICAL WALL REINFORCEMENT, SEE WALL SECTIONS AND DETAILS FOR EACH FACILITY. FOR MINIMUM REINFORCEMENT REQUIREMENTS, SEE GENERAL STRUCTURAL NOTES.
2. LAP VERTICAL REINFORCEMENT WITH WALL DOWELS 72 BAR DIAMETERS, LAP ALL OTHER VERTICAL BARS 72 BAR DIAMETERS.
3. STAGGER SPLICES IN ADJACENT HORIZONTAL BARS IN THE SAME COURSE BY 2'-0".
4. PROVIDE DOWEL BARS IN FOUNDATION TO MATCH ALL VERTICAL REINFORCEMENT.
5. FOR ADDED REINFORCEMENT AT WALL INTERSECTIONS AND CORNERS, SEE 0422-001.
6. GROUT EACH SIDE OF OPENING AS NOTED IN TYPICAL OPENING REINFORCEMENT DETAIL 0422-003.
7. FOR HORIZONTAL REINFORCEMENT AT OPENINGS SEE PIER AND COLUMN DETAILS 0422-005 AND 0422-006 .
8. DO NOT PLACE VERTICAL CONDUIT IN THE SAME CELL AS VERTICAL REINFORCEMENT.
9. HOOK TYPICAL HORIZONTAL REINFORCEMENT WITH STANDARD 180° HOOK AROUND VERTICAL REINFORCEMENT AT EDGE OF OPENING AND WALL ENDS.

SPECIAL REINFORCED MASONRY SHEAR WALL

NTS

0422-004

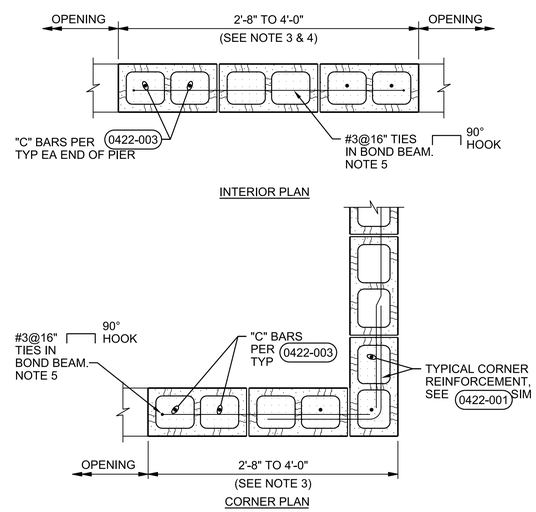

8" CMU WALL

NOTES:

1. SOLID GROUT PIERS FULL WALL HEIGHT.
2. WHERE PIERS ARE CENTERED BELOW BEAM BEARING, REDUCE TIE SPACING TO 8".
3. FOR 8" CMU WALL PIERS 2'-0" AND LESS, SEE WALL COLUMN DETAIL 0422-006
4. NO CONTROL JOINTS WITHIN THIS LOCATION.
5. PROVIDE 180° HOOK AROUND VERTICAL REINFORCING AT ENDS IN SPECIAL REINFORCED MASONRY SHEAR WALLS.

DETAIL 1 OF 2

CMU WALL PIER

NTS

0422-005

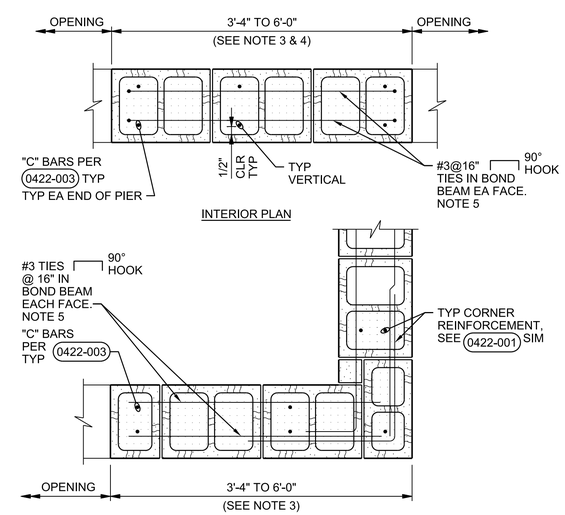

12" CMU WALL

NOTES:

1. SOLID GROUT PIERS FULL WALL HEIGHT.
2. WHERE PIERS ARE CENTERED BELOW BEAM BEARING, REDUCE TIE SPACING TO 8".
3. FOR 12" CMU WALL PIERS 2'-8" AND LESS, SEE WALL COLUMN DETAIL 0422-006
4. NO CONTROL JOINTS WITHIN THIS LOCATION.
5. PROVIDE 180° HOOK AROUND VERTICAL REINFORCING AT ENDS IN SPECIAL REINFORCED MASONRY SHEAR WALLS.

DETAIL 2 OF 2

CMU WALL PIER

NTS

0422-005

ALABAMA LICENSED No. 29827 PROFESSIONAL ENGINEER GARRICK DONNELL PETTY

Digitally signed by Garrick D Petty Petty
Date: 2024.10.29 14:08:34-04'00'

NO.	DATE	REVISION	BY	APVD

DSGN	DR	CHK	APVD
G PETTY	P KARABAN	D EVERSON	G PETTY

REUSE OF DOCUMENTS: THIS DOCUMENT, AND THE IDEAS AND DESIGNS INCORPORATED HEREIN, AS AN INSTRUMENT OF PROFESSIONAL SERVICE, IS THE PROPERTY OF JACOBS AND IS NOT TO BE USED, IN WHOLE OR IN PART, FOR ANY OTHER PROJECT WITHOUT THE WRITTEN AUTHORIZATION OF JACOBS.

PAUL B. KREBS WATER TREATMENT PLANT
IMPROVEMENTS
ANNISTON WATER WORKS & SEWER BOARD
CITY OF ANNISTON, ALABAMA

Jacobs

STRUCTURAL

STANDARD DETAILS

BID DOCUMENTS

VERIFY SCALE
BAR IS ONE INCH ON ORIGINAL DRAWING.
0 1"

DATE	OCTOBER 2024
PROJ	D3698100
DWG	99-S-509
SHEET	75 of 145

©JACOBS 2024. ALL RIGHTS RESERVED.

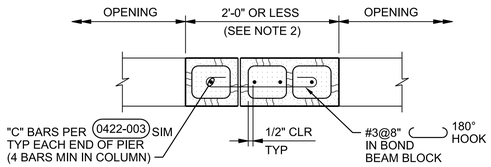

INTERIOR PLAN

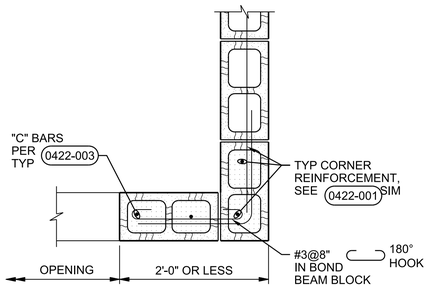

CORNER PLAN

8" CMU WALL

NOTES:

1. GROUT WALL COLUMNS FULL WALL HEIGHT.
2. NO CONTROL JOINTS WITHIN THIS LOCATION.

DETAIL 1 OF 2

CMU WALL COLUMN

NTS

0422-006

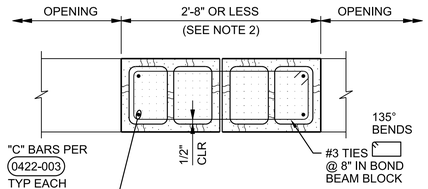

INTERIOR PLAN

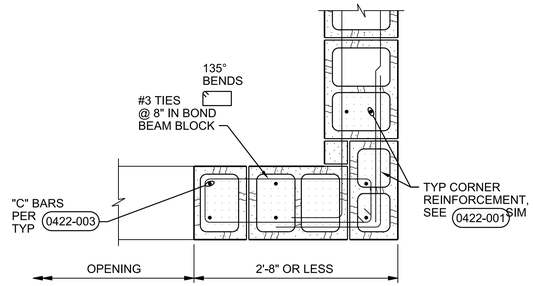

CORNER PLAN

12" CMU WALL

NOTES:

1. GROUT WALL COLUMNS FULL WALL HEIGHT.
2. NO CONTROL JOINTS WITHIN THIS LOCATION.

DETAIL 2 OF 2

CMU WALL COLUMN

NTS

0422-006

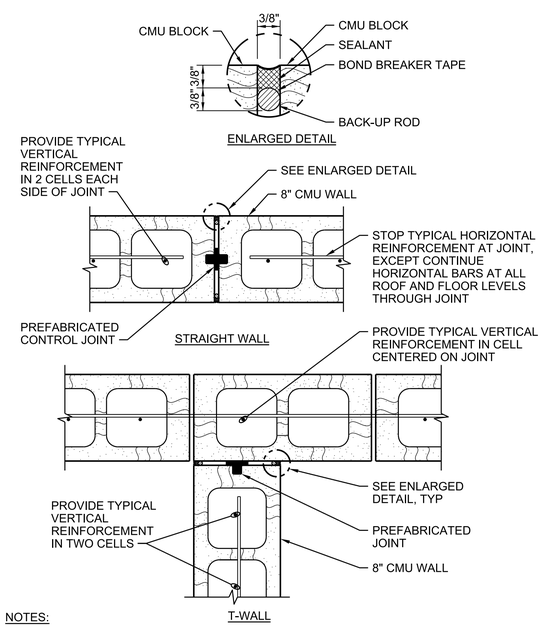

NOTES:

1. 12" CMU WALL WITH 2 LAYERS OF REINFORCEMENT IS SIMILAR.
2. FOR MASONRY CONTROL JOINT LOCATIONS SEE PLANS.

CMU CONTROL JOINT

NTS

0422-031

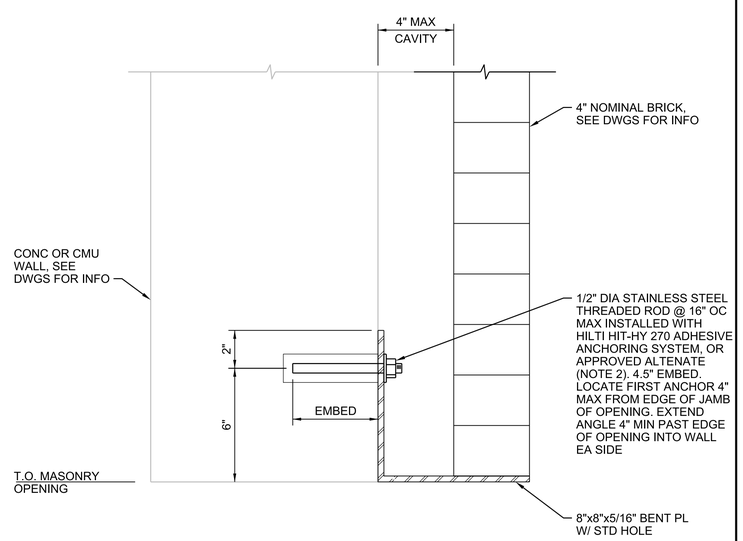

NOTES:

1. HOT DIP GALVANIZE AFTER FABRICATION.
2. MINIMUM ALLOWABLE ADHESIVE BOND LOADS:
   - TENSION LOAD = 2000 LBS
   - SHEAR LOAD = 1500 LBS

BRICK LEDGER

NTS

0422-065

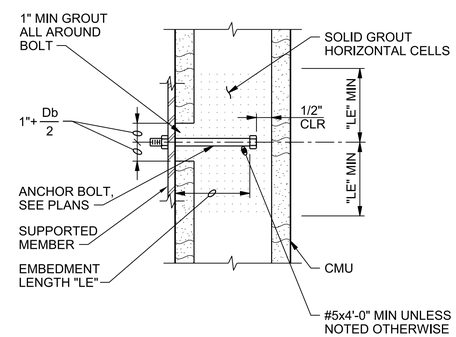

NOTE:

Db = DIAMETER OF BOLT

MASONRY ANCHOR BOLT

NTS

0422-046

ALABAMA LICENSED No. 29827 PROFESSIONAL ENGINEER GARRICK DONNELL PETTY

Digitally signed by Garrick D Petty Petty
Date: 2024.10.29 14:08:38-04'00'

NO.	DATE	REVISION	BY	APVD

DSGN	DR	CHK	APVD
G PETTY	P KARABAN	D EVERSON	G PETTY

PAUL B. KREBS WATER TREATMENT PLANT
IMPROVEMENTS
ANNISTON WATER WORKS & SEWER BOARD
CITY OF ANNISTON, ALABAMA

REUSE OF DOCUMENTS: THIS DOCUMENT, AND THE IDEAS AND DESIGNS INCORPORATED HEREIN, AS AN INSTRUMENT OF PROFESSIONAL SERVICE, IS THE PROPERTY OF JACOBS AND IS NOT TO BE USED, IN WHOLE OR IN PART, FOR ANY OTHER PROJECT WITHOUT THE WRITTEN AUTHORIZATION OF JACOBS.

Jacobs

STRUCTURAL

STANDARD DETAILS

BID DOCUMENTS

VERIFY SCALE
BAR IS ONE INCH ON ORIGINAL DRAWING.
0 1"

DATE	OCTOBER 2024
PROJ	D3698100
DWG	99-S-510
SHEET	76 of 145

©JACOBS 2024. ALL RIGHTS RESERVED.

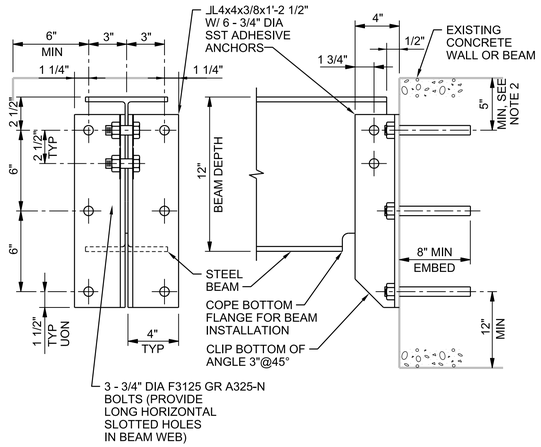

NOTES:

1. DO NOT CUT EXISTING CONCRETE BEAM TOP REINFORCING DURING DRILL-IN ANCHOR INSTALLATION. FIELD LOCATE BEAM REINFORCING PRIOR TO FABRICATION WITH GROUND PENETRATING RADAR OR OTHER ACCEPTABLE MEANS. ADD LENGTH TO CLIP ANGLES AS REQUIRED TO LOWER ANCHORS TO CLEAR REINFORCING WHILE MAINTAINING SPACING AND EDGE DISTANCE AS SHOWN.

3. WHERE BOTH ENDS OF BEAM ARE ATTACHED TO A WALL, PROVIDE LONG HORIZONTALLY SLOTTED HOLES IN BEAM WEB AT ONE END. TIGHTEN NUTS SNUG TIGHT, BACK OFF 1/2 TURN, AND LOCK WITH DOUBLE NUT.

BEAM / WALL CONNECTION - STEEL

0512-056

NTS

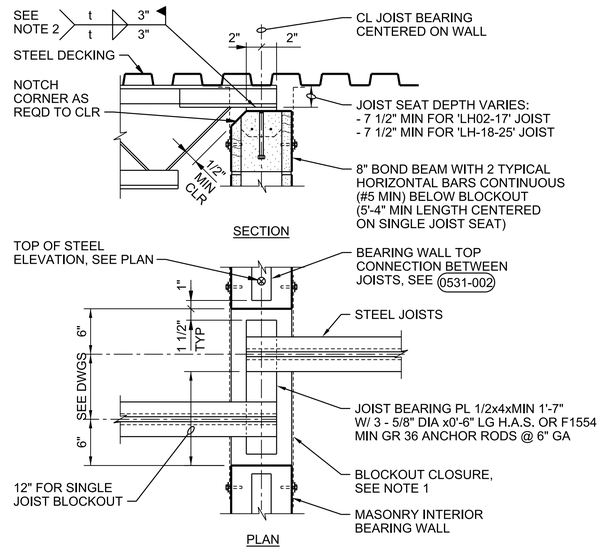

NOTES:

1. PROVIDE CLOSURE PLATES EACH SIDE OF WALL BLOCKOUT SIM TO 0558-002 FILL VOID AROUND JOIST WITH FIRESAFING.
2. USE 1/8" WELD FOR K SERIES JOIST AND 1/4" WELD FOR LH SERIES JOIST. t = FILLET WELD SIZE.

STEEL JOIST SEAT/INTERIOR WALL

0521-001

NTS

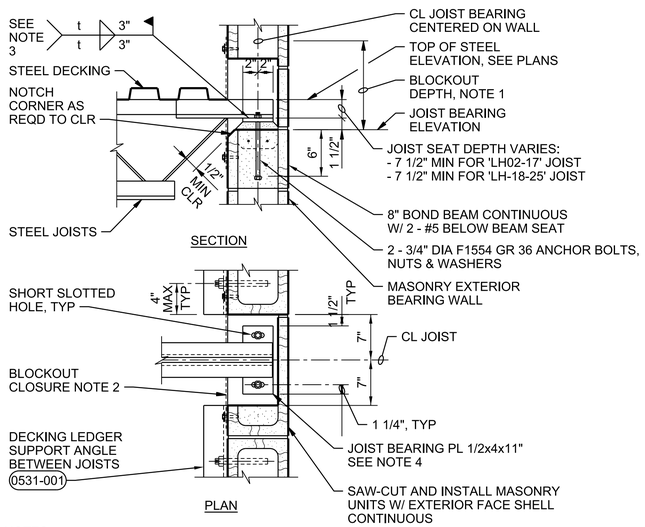

NOTES:

1. PROVIDE BLOCKOUT DEPTH AS REQUIRED FOR SETTING JOISTS, 8" MIN, OR SET JOISTS BEFORE COMPLETING WALL ABOVE.
2. PROVIDE CLOSURE PLATES EACH SIDE OF WALL BLOCKOUT SIMILAR TO 0558-002 FILL VOID AROUND JOIST WITH FIRESAFING.
3. USE 1/8" WELD FOR K SERIES JOIST AND 1/4" WELD FOR LH SERIES JOIST. t = FILLET WELD SIZE.
4. FOR SPANS SHORTER THAN 40 FEET, PROVIDE BEARING PLATE 1/2x4x11" WITH TWO 5/8x6" HEADED ANCHOR STUDS AT 8" GAGE.

STEEL JOIST SEAT/EXTERIOR WALL

0521-002

NTS

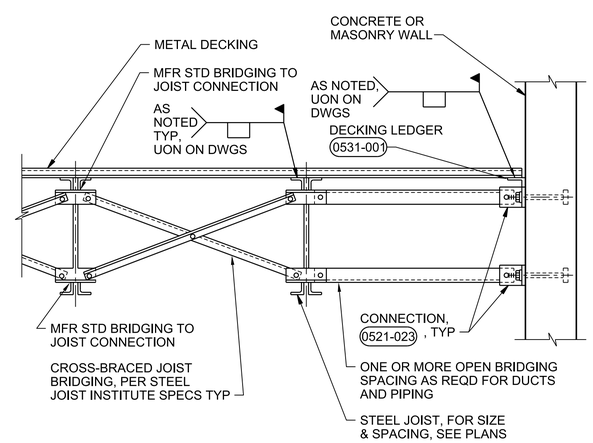

TYPICAL LH JOIST BRIDGING

0521-021

NTS

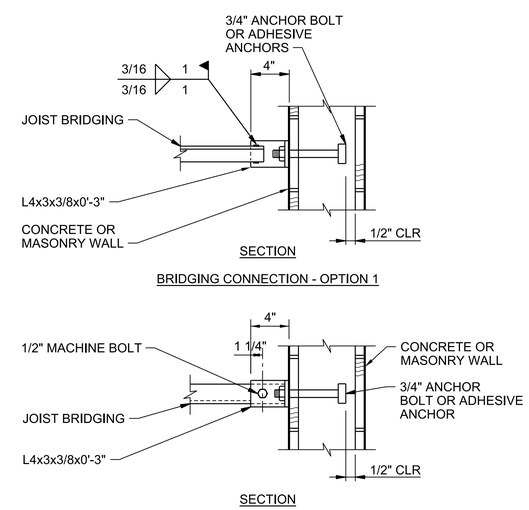

NOTES:

1. MINIMUM BRIDGING CONNECTION SHOWN. COORDINATE WITH JOIST MANUFACTURER REQUIREMENTS

2. OPTION 1 OR 2 CAN BE USED FOR TOP OR BOTTOM BRIDGING CONNECTIONS, OR COMBINED CONNECTION CAN BE USED.

JOIST BRIDGING/ WALL CONNECTION

0521-023

NTS

ALABAMA LICENSED No. 29827 PROFESSIONAL ENGINEER GARRICK DONNELL PETTY

Digitally signed by Garrick D Petty Petty
Date: 2024.10.29 14:58:01 -04'00'

NO.	DATE	REVISION	BY	APVD

DSGN	DR	CHK	APVD
G PETTY	P KARABAN	D EVERSON	G PETTY

PAUL B. KREBS WATER TREATMENT PLANT
IMPROVEMENTS
ANNISTON WATER WORKS & SEWER BOARD
CITY OF ANNISTON, ALABAMA

REUSE OF DOCUMENTS: THIS DOCUMENT, AND THE IDEAS AND DESIGNS INCORPORATED HEREIN, AS AN INSTRUMENT OF PROFESSIONAL SERVICE, IS THE PROPERTY OF JACOBS AND IS NOT TO BE USED, IN WHOLE OR IN PART, FOR ANY OTHER PROJECT WITHOUT THE WRITTEN AUTHORIZATION OF JACOBS.

Jacobs

STRUCTURAL

STANDARD DETAILS

VERIFY SCALE

BAR IS ONE INCH ON ORIGINAL DRAWING.
0 1"

DATE	OCTOBER 2024
PROJ	D3698100
DWG	99-S-511
SHEET	77 of 145

BID DOCUMENTS

©JACOBS 2024. ALL RIGHTS RESERVED.

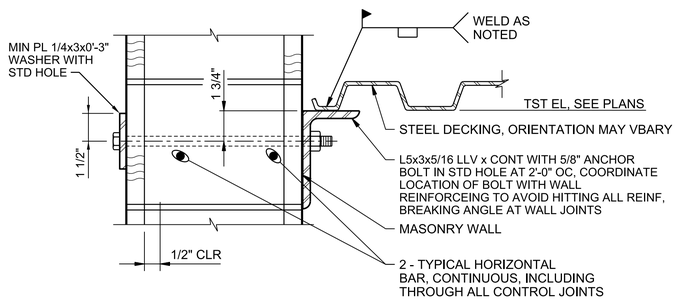

DECKING LEDGER SUPPORT ANGLE

NTS

0531-001

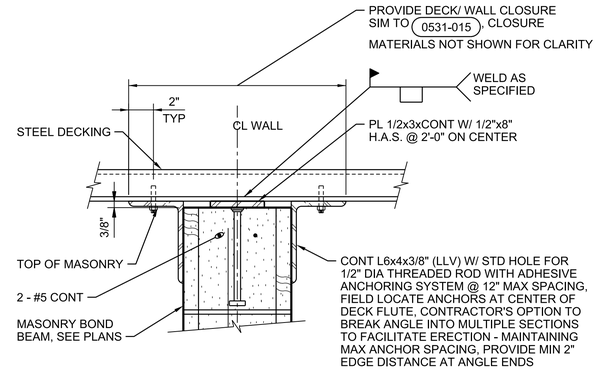

NOTES:

1. WHERE DECKING SPAN IS PARALLEL TO WALL, LOCATE VALLEY OF DECKING CENTERED ON WALL.
2. FOR CLOSURE, SEE 0531-015 TYPICAL UNLESS OTHERWISE NOTED . NOT SHOWN FOR CLARITY.

METAL DECK BEARING WALL TOP CONNECTION

NTS

0531-002

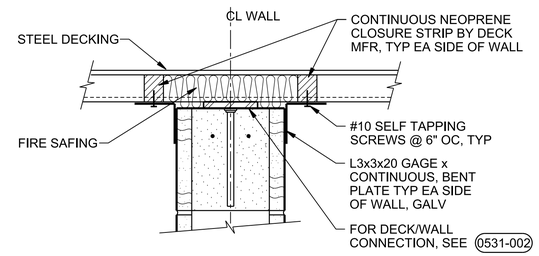

NOTE:

WALL CLOSURE NOT REQUIRED WHERE DECKING IS PARALLEL TO WALL.

METAL DECK/ BEARING WALL CLOSURE

NTS

0531-015

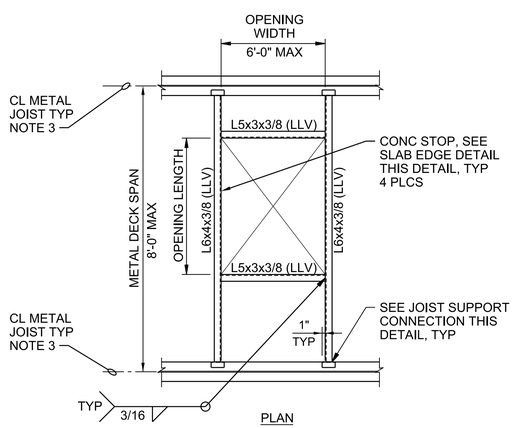

OPENINGS 2'-1" TO 6'-0"

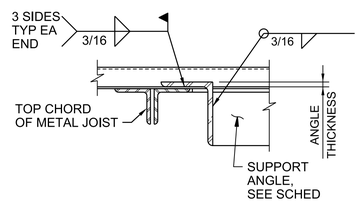

JOIST SUPPORT CONNECTION

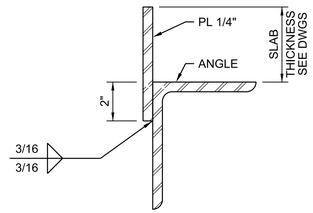

SLAB EDGE DETAIL

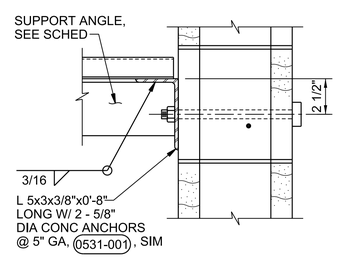

WALL SUPPORT

NOTES:

1. ATTACH METAL DECKING TO ALL SUPPORTS PERPENDICULAR TO DECKING SPAN WITH SPECIFIED FASTENERS AT EACH VALLEY OF DECKING. ATTACH METAL DECKING TO SUPPORTS PARALLEL TO SPAN @ 6" ON CENTER. WHERE VALLEY OF DECKING DOES NOT FALL AT SUPPORTS PARALLEL TO DECK SPAN, PROVIDE FILLER PIECES FOR EQUAL ATTACHMENTS.
2. REFER TO SPECIFICATIONS FOR SMALLER DECK OPENING REINFORCEMENT.
3. AT LOCATIONS WHERE ROOF DECK OPENING FRAMING NEEDS TO BE WALL SUPPORTED, SEE WALL SUPPORT DETAIL THIS DETAIL.

ROOF DECK OPENING

NTS

0531-021

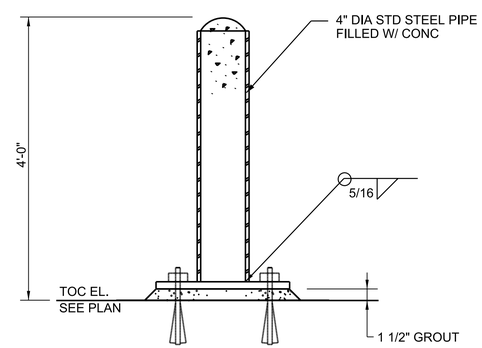

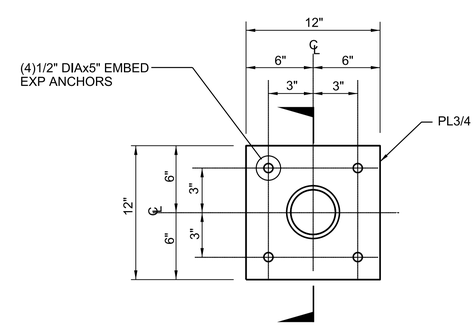

PIPE BOLLARD

NTS

0550-341

NO.	DATE	REVISION	BY	APVD

DSGN G PETTY | DR P KARABAN | CHK D EVERSON | APVD G PETTY

PAUL B. KREBS WATER TREATMENT PLANT IMPROVEMENTS
ANNISTON WATER WORKS & SEWER BOARD
CITY OF ANNISTON, ALABAMA

STRUCTURAL
STANDARD DETAILS

REUSE OF DOCUMENTS: THIS DOCUMENT, AND THE IDEAS AND DESIGNS INCORPORATED HEREIN, AS AN INSTRUMENT OF PROFESSIONAL SERVICE, IS THE PROPERTY OF JACOBS AND IS NOT TO BE USED, IN WHOLE OR IN PART, FOR ANY OTHER PROJECT WITHOUT THE WRITTEN AUTHORIZATION OF JACOBS.

VERIFY SCALE
BAR IS ONE INCH ON ORIGINAL DRAWING.
0 1"

DATE	OCTOBER 2024
PROJ	D3698100
DWG	99-S-512
SHEET	78 of 145

BID DOCUMENTS

©JACOBS 2024. ALL RIGHTS RESERVED.

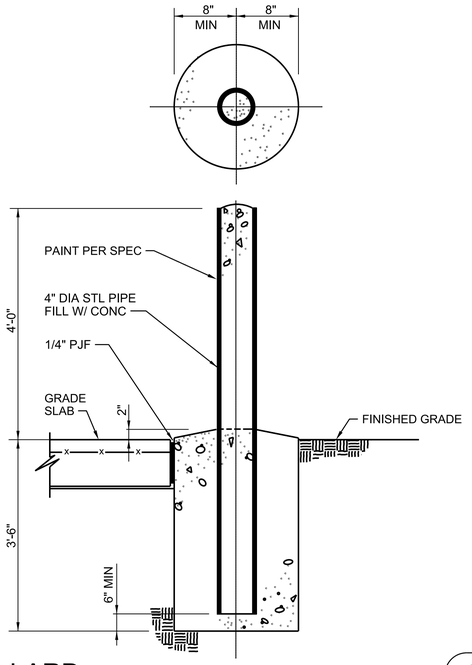

PIPE BOLLARD

NTS

0550-342

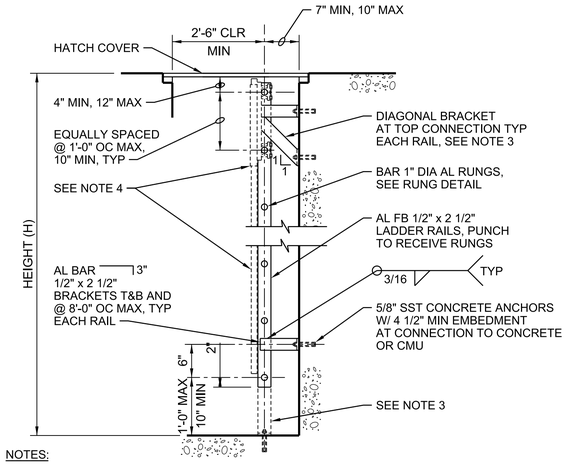

NOTES:

1. PROVIDE PROTECTION FOR ALUMINUM IN CONTACT WITH CONCRETE PER SPECIFICATIONS.
2. AT CONTRACTOR'S OPTION, PRE-ENGINEERED PIPE LADDER AS SPECIFIED MAY BE USED IN LIEU OF FLAT BAR LADDERS.
3. AT INTERIOR DRY AREAS, EXTEND RAILS AND BEND 3" AT FLOOR. SECURE WITH 5/8" SSTCONCRETE ANCHORS. DIAGONAL BRACKET NOT REQUIRED IF BASE OF LADDER EXTENDS TO SLAB BELOW.
4. FOR H LESS THAN OR EQUAL TO 24'-0" PROVIDE LADDER SAFETY POST. FOR H GREATER THAN 24'-0" PROVIDE SAFETY CLIMB DEVICE WITH LADDER POST SAFETY EXTENSION.

LADDER - ALUMINUM - FLAT BAR UNDER COVER - TYPE 'A'

NTS

DETAIL 1 OF 2

0551-101

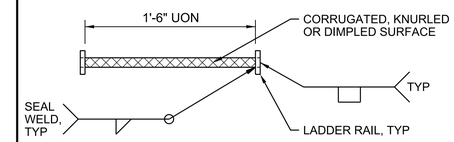

PLAN

RUNG DETAIL

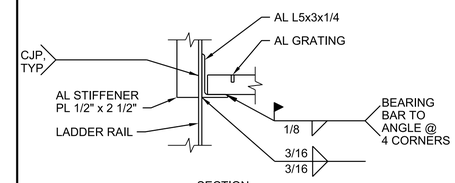

SECTION

GRATING CONNECTION DETAIL

LADDER - ALUMINUM - FLAT BAR DETAILS

NTS

DETAIL 2 OF 2

0551-101

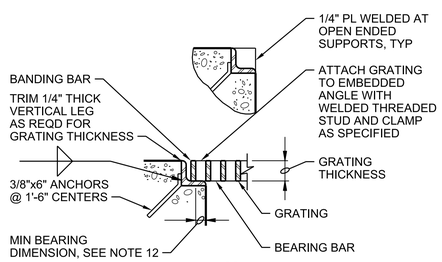

GS-1

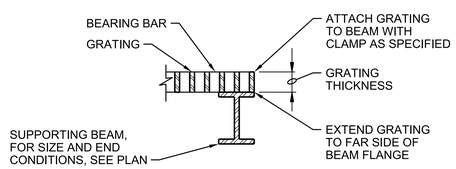

GS-2 - ONE SIDED

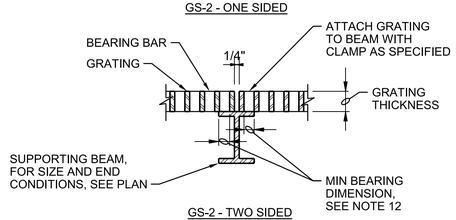

GS-2 - TWO SIDED

STANDARD GRATING

NTS

DETAIL 1 OF 4

0553-001

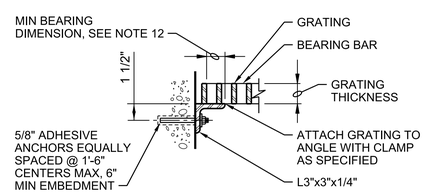

NOTES:

1. USE GS-3 ONLY FOR LIGHT DUTY GRATING, TYPE 'A'.
2. INSTALL ANCHORS MAXIMUM 4" FROM EACH END.
3. WHEN ANCHOR IS WITHIN 4" OF A CONCRETE EDGE, UTILIZE MANUFACTURER'S LOW-TORQUE INSTALLATION PROCEDURES.

GS-3

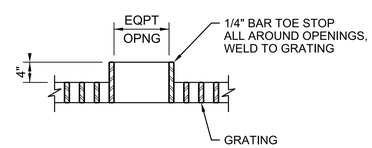

EQUIPMENT OPENINGS

STANDARD GRATING

NTS

DETAIL 2 OF 4

0553-001

GENERAL NOTES:

1. GRATING SHALL BE LIGHT DUTY GRATING UNLESS OTHERWISE NOTED ON DRAWINGS.
2. GRATING SPAN IS INDICATED BY ⟷, SEE PLAN.
3. INDIVIDUAL GRATING SECTIONS SHALL NOT EXCEED 3'-0" IN WIDTH OR WEIGH MORE THAN 150 POUNDS, UNLESS INDICATED OTHERWISE, FOR TYPES 'A' & 'B' GRATING. TYPE 'C' GRATING SHALL HAVE A MINIMUM WIDTH OF 2'-0" REGARDLESS OF WEIGHT.
4. SHOP DRAWINGS BASED ON FIELD DIMENSIONS SHALL BE SUBMITTED TO THE ENGINEER PRIOR TO FABRICATION.
5. MATERIAL FOR SUPPORTS OF STEEL AND ALUMINUM GRATING TO BE SAME AS GRATING, EXCEPT METAL SUPPORTS THAT ARE TO BE EMBEDDED IN CONCRETE SHALL BE TYPE 316 STAINLESS STEEL.
6. UNLESS NOTED OTHERWISE ON PLANS, GRATING THICKNESS SHALL BE AS TABULATED IN "GRATING THICKNESS TABLE" FOR APPLICABLE GRATING TYPE.
7. FOR SERRATED BEARING BARS, INCREASE GRATING THICKNESSES SHOWN IN TABLES BY 1/4".
8. BEARING BAR THICKNESS FOR GRATING TO BE 3/16" MINIMUM. SEE SPECIFICATIONS FOR SPACING OF BEARING AND CROSS BARS.
9. BAND ALL EDGES. MATCH DEPTH OF BEARING BAR.
10. TYPE OF MATERIAL USED SHALL BE AS SHOWN ON PLANS OR AS SPECIFIED. THIS STANDARD DETAIL INCLUDES 2 TYPES, ALTHOUGH BOTH MAY NOT BE INCLUDED IN PROJECT.
11. THE HORIZONTAL CLEARANCE BETWEEN THE GRATING AND GRATING SUPPORTS SHALL NOT BE LESS THAN 1/4" NOR GREATER THAN 1/2" AND AS SPECIFIED.
12. MINIMUM BEARING HORIZONTAL DIMENSION = 1" FOR GRATING DEPTH 2 1/4" OR LESS. MINIMUM BEARING HORIZONTAL DIMENSION = 2" FOR GRATING DEPTH GREATER THAN 2 1/4"

STANDARD GRATING

NTS

DETAIL 3 OF 4

0553-001

ALABAMA LICENSED No. 29827 PROFESSIONAL ENGINEER GARRICK DONNELL PETTY

Digitally signed by Garrick D Petty Petty
Garrick D Petty Petty
Date: 2024.10.29 14:08:32 -04'00'

NO.	DATE	REVISION	BY	APVD

DSGN	DR	CHK	APVD
G PETTY	P KARABAN	D EVERSON	G PETTY

REUSE OF DOCUMENTS: THIS DOCUMENT, AND THE IDEAS AND DESIGNS INCORPORATED HEREIN, AS AN INSTRUMENT OF PROFESSIONAL SERVICE, IS THE PROPERTY OF JACOBS AND IS NOT TO BE USED, IN WHOLE OR IN PART, FOR ANY OTHER PROJECT WITHOUT THE WRITTEN AUTHORIZATION OF JACOBS.

PAUL B. KREBS WATER TREATMENT PLANT
IMPROVEMENTS
ANNISTON WATER WORKS & SEWER BOARD
CITY OF ANNISTON, ALABAMA

Jacobs

STRUCTURAL

STANDARD DETAILS

VERIFY SCALE
BAR IS ONE INCH ON ORIGINAL DRAWING.
0 1"

DATE	OCTOBER 2024
PROJ	D3698100
DWG	99-S-513
SHEET	of 145

BID DOCUMENTS

FILENAME:99-S-513_D3698100.dgn PLOT DATE: 10/22/2024 PLOT TIME: 12:54:55 PM

©JACOBS 2024. ALL RIGHTS RESERVED.

LIGHT DUTY GRATING TYPE 'A' (100 PSF)		
GRATING THICKNESS TABLE		
MAXIMUM SPAN	STEEL	ALUMINUM
3'-6"	1"	1 1/4"
4'-0"	1"	1 1/2"
4'-6"	1"	1 3/4"
5'-0"	1 1/4"	1 3/4"
5'-6"	1 1/4"	2"
6'-0"	1 1/2"	2 1/4"
6'-6"	1 1/2"	2 1/4"
7'-0"	1 3/4"	2 1/2"

MEDIUM DUTY GRATING TYPE 'B' (500 PSF)		
GRATING THICKNESS TABLE		
MAXIMUM SPAN	STEEL	ALUMINUM
< 2'-0"	1"	1"
2'-6"	1"	1 1/4"
3'-0"	1 1/4"	1 1/2"
3'-6"	1 1/4"	1 3/4"
4'-0"	1 1/2"	2"
4'-6"	1 3/4"	2 1/4"
5'-0"	1 3/4"	2 1/2"
5'-6"	2"	DO NOT USE ALUMINUM GRATING
6'-0"	2 1/4"	
6'-6"	2 1/2"	

HEAVY DUTY GRATING TYPE 'C' (H 20 WHEEL LOAD)		
GRATING THICKNESS TABLE		
MAXIMUM SPAN	STEEL	ALUMINUM
1'-0"	2"x3/16"	DO NOT USE ALUMINUM GRATING
1'-8"	2 1/2"x1/4"	
2'-0"	2 1/2"x3/8" OR 3"x1/4"	
2'-6"	3"x3/8" OR 4"x1/4"	
3'-3"	3 1/2"x3/8"	
4'-0"	4"x3/8"	
5'-0"	4 1/2"x3/8"	

DETAIL 4 OF 4

STANDARD GRATING

NTS

0553-001

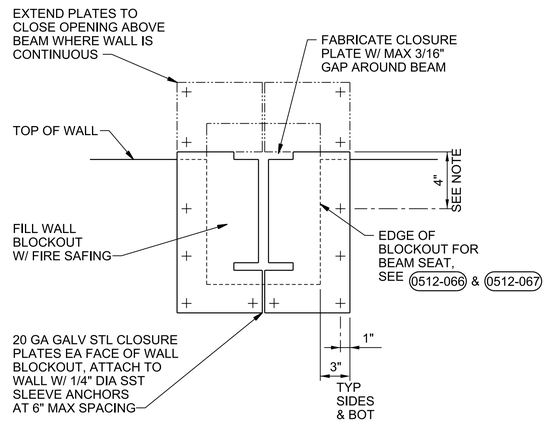

NOTE:

FOR DETAIL 0512-067 CLOSURES, LOCATE ANCHORS SO THEY DO NOT CONFLICT WITH LEDGER ANGLE.

BEAM SEAT CLOSURE PLATE

NTS

0558-002

ALABAMA LICENSED No. 29827 PROFESSIONAL ENGINEER GARRICK DONNELL PETTY

Digitally signed by Garrick D Petty
Garrick D Petty
Date: 2024.10.29 14:58:57 -04'00'

NO.	DATE	REVISION	BY	APVD

DSGN	DR	CHK	APVD
G PETTY	P KARABAN	D EVERSON	G PETTY

PAUL B. KREBS WATER TREATMENT PLANT
IMPROVEMENTS
ANNISTON WATER WORKS & SEWER BOARD
CITY OF ANNISTON, ALABAMA

Jacobs

STRUCTURAL
STANDARD DETAILS

REUSE OF DOCUMENTS: THIS DOCUMENT, AND THE IDEAS AND DESIGNS INCORPORATED HEREIN, AS AN INSTRUMENT OF PROFESSIONAL SERVICE, IS THE PROPERTY OF JACOBS AND IS NOT TO BE USED, IN WHOLE OR IN PART, FOR ANY OTHER PROJECT WITHOUT THE WRITTEN AUTHORIZATION OF JACOBS.

VERIFY SCALE
BAR IS ONE INCH ON ORIGINAL DRAWING.
0 1"

DATE	OCTOBER 2024
PROJ	D3698100
DWG	99-S-514
SHEET	80 of 145

BID DOCUMENTS

©JACOBS 2024. ALL RIGHTS RESERVED.

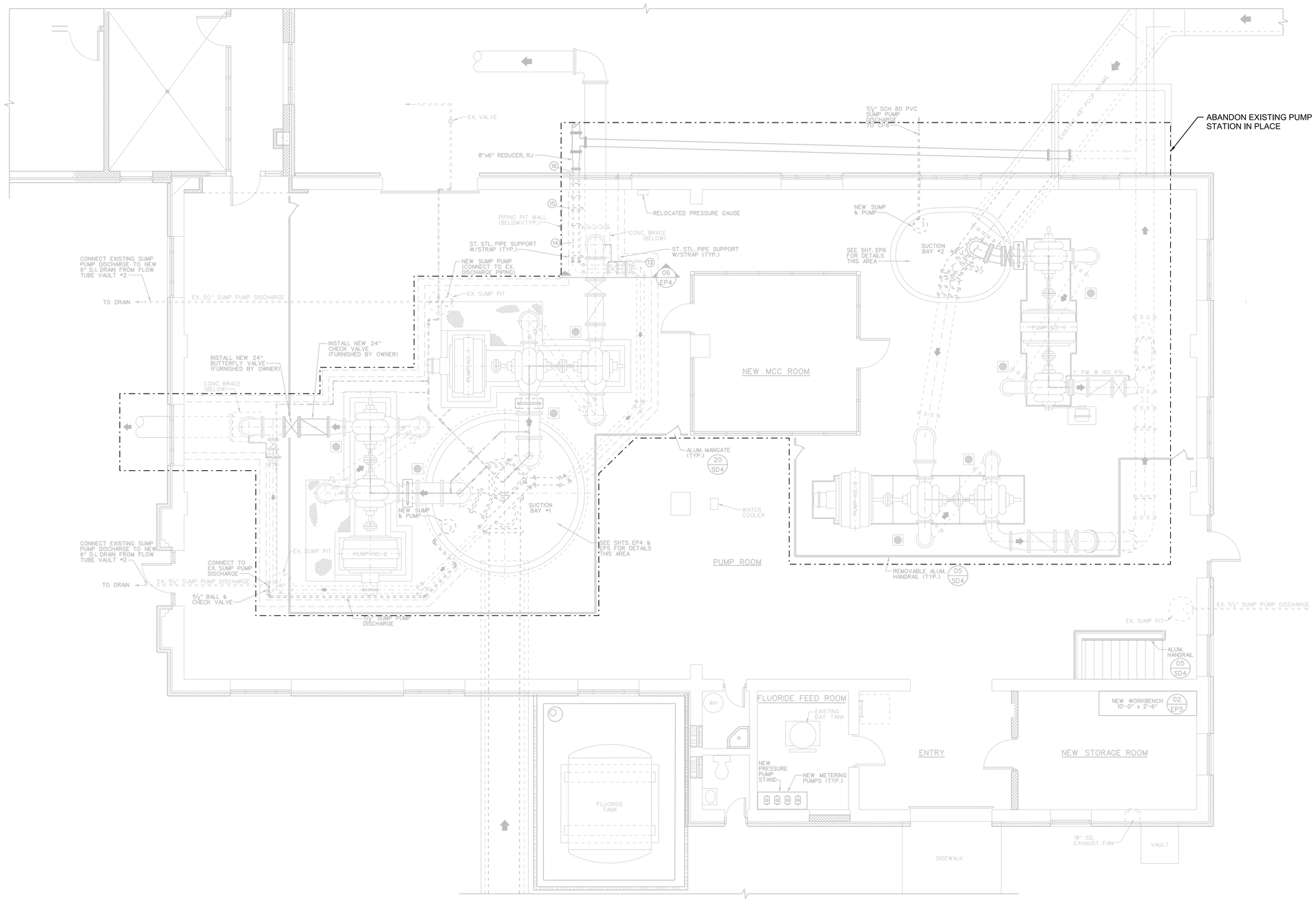

N

EXISTING PUMP ROOM PLAN

3/16"=1'-0"

ALABAMA LICENSED PROFESSIONAL ENGINEER MORGAN SUMMERLIN LAKEMAN

Morgan Lakeman

PE51134

Digitally signed by Morgan Lakeman
DN: cn=Morgan Lakeman, o=Jacobs, ou=Jacobs, email=Morgan.Lakeman@jacobs.com, c=US
Date: 2024.10.22 08:57:00 -05'00'

NO.	DATE	REVISION	BY	APVD

DSGN M LAKEMAN | DR P HAMERLIK | CHK M STICKLEY | APVD M LAKEMAN

REUSE OF DOCUMENTS: THIS DOCUMENT, AND THE IDEAS AND DESIGNS INCORPORATED HEREIN, AS AN INSTRUMENT OF PROFESSIONAL SERVICE, IS THE PROPERTY OF JACOBS AND IS NOT TO BE USED, IN WHOLE OR IN PART, FOR ANY OTHER PROJECT WITHOUT THE WRITTEN AUTHORIZATION OF JACOBS.

PAUL B. KREBS WATER TREATMENT PLANT
IMPROVEMENTS
ANNISTON WATER WORKS & SEWER BOARD
CITY OF ANNISTON, ALABAMA

Jacobs

DEMOLITION
EXISTING PUMP ROOM PLAN

VERIFY SCALE
BAR IS ONE INCH ON ORIGINAL DRAWING.
0 1"

DATE	OCTOBER 2024
PROJ	D3698100
DWG	06-D-101
SHEET	81 of 145

BID DOCUMENTS

FILENAME:06-D-101_D3698100.dgn PLOT DATE: 10/22/2024 PLOT TIME: 12:56:11 PM

©JACOBS 2024. ALL RIGHTS RESERVED.

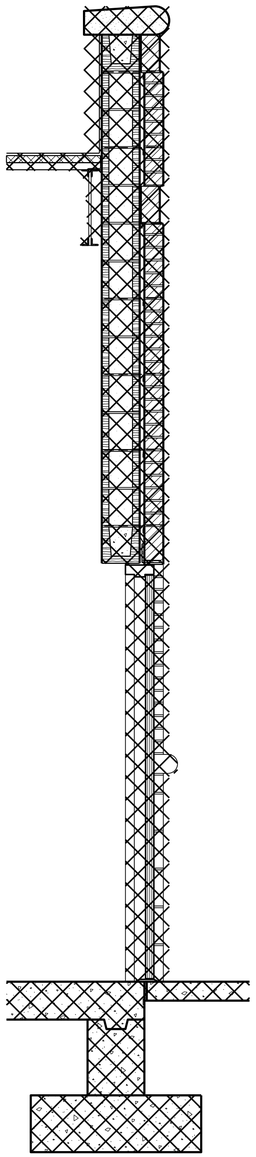

05 WALL SECTION
3/4"=1'-0"

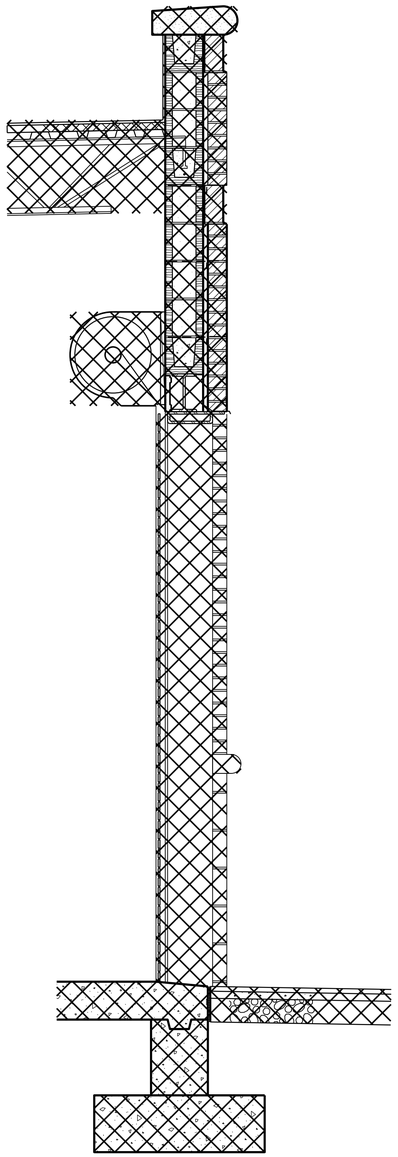

04 WALL SECTION
3/4"=1'-0"

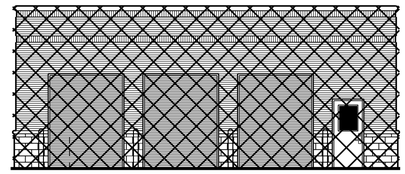

18 NORTH ELEVATION
1/8"=1'-0"

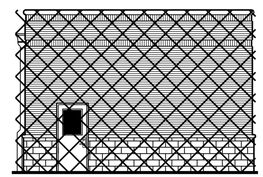

13 EAST ELEVATION
1/8"=1'-0"

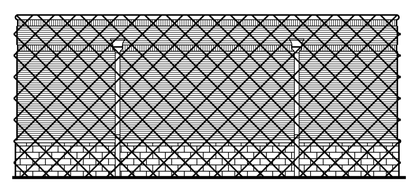

08 SOUTH ELEVATION
1/8"=1'-0"

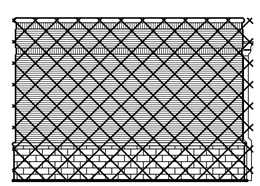

03 WEST ELEVATION
1/8"=1'-0"

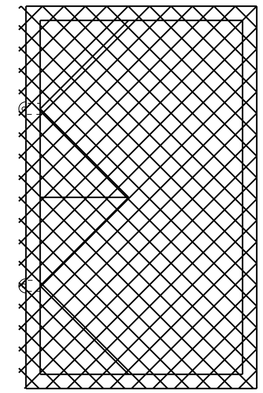

ROOF PLAN
1/8"=1'-0"

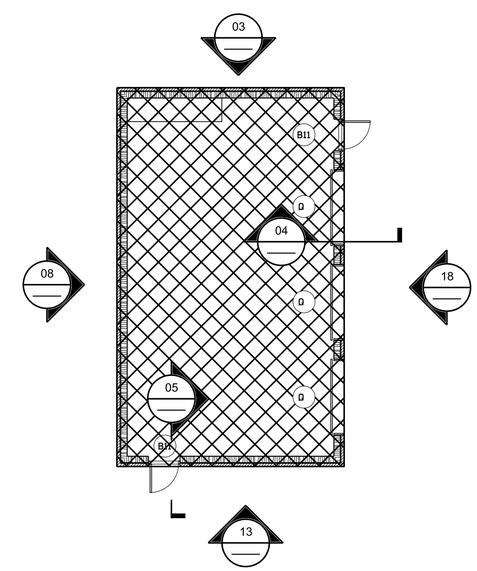

FLOOR PLAN
1/8"=1'-0"

ALABAMA LICENSED PROFESSIONAL ENGINEER
Morgan Lakeman
PE STUDENT
MORGAN SUMMERLIN LAKEMAN

NO.	DATE	REVISION	BY	APVD

DSGN M LAKEMAN | DR P HAMERLIK | CHK M STICKLEY | APVD M LAKEMAN

PAUL B. KREBS WATER TREATMENT PLANT
IMPROVEMENTS
ANNISTON WATER WORKS & SEWER BOARD
CITY OF ANNISTON, ALABAMA

Jacobs

DEMOLITION
STORAGE BUILDING
PLAN AND DETAILS

REUSE OF DOCUMENTS: THIS DOCUMENT, AND THE IDEAS AND DESIGNS INCORPORATED HEREIN, AS AN INSTRUMENT OF PROFESSIONAL SERVICE, IS THE PROPERTY OF JACOBS AND IS NOT TO BE USED, IN WHOLE OR IN PART, FOR ANY OTHER PROJECT WITHOUT THE WRITTEN AUTHORIZATION OF JACOBS.

VERIFY SCALE
BAR IS ONE INCH ON ORIGINAL DRAWING.
0 1"

DATE	OCTOBER 2024
PROJ	D3698100
DWG	06-D-102
SHEET	82 of 145

BID DOCUMENTS

©JACOBS 2024. ALL RIGHTS RESERVED.

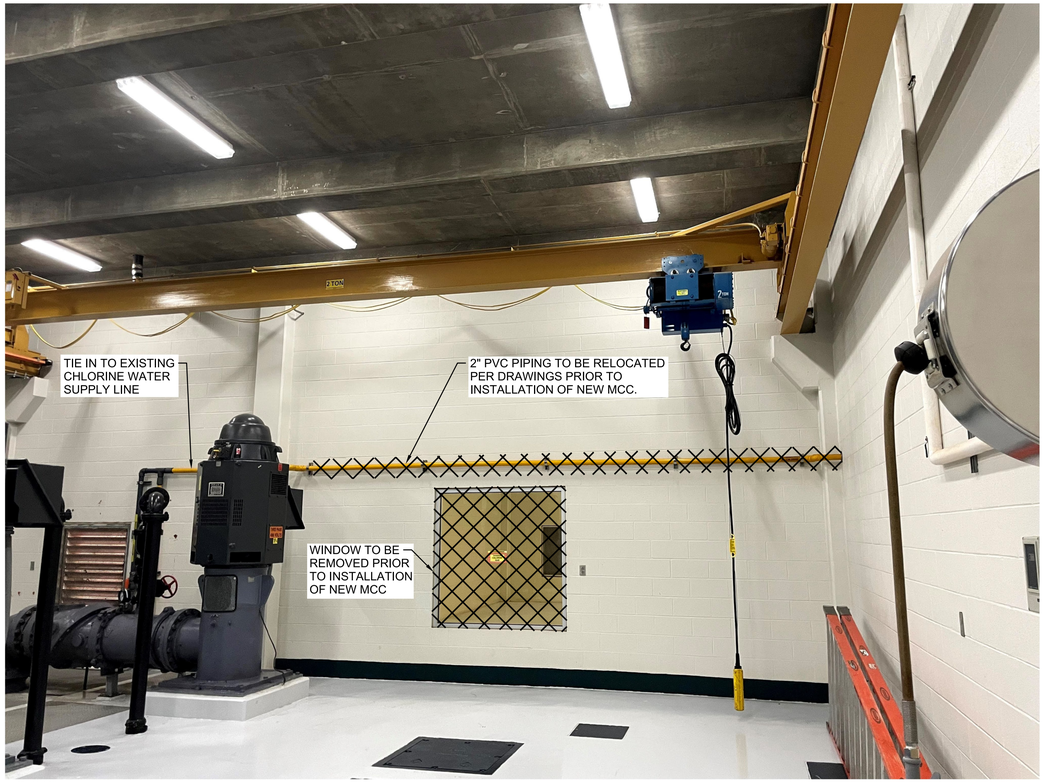

1 PHOTO
NTS

GENERAL NOTES

1. SEE ELECTRICAL SHEETS FOR NEW MCC INSTALLATION.

ALABAMA LICENSED PROFESSIONAL ENGINEER
Morgan Lakeman
PE51034
MORGAN SUMMERLIN LAKEMAN
Date: 2024.10.22 09:09:00 -05'00'

NO.	DATE	REVISION	BY	APVD

DSGN M LAKEMAN | DR P HAMERLIK | CHK M STICKLEY | APVD M LAKEMAN

PAUL B. KREBS WATER TREATMENT PLANT
IMPROVEMENTS
ANNISTON WATER WORKS & SEWER BOARD
CITY OF ANNISTON, ALABAMA

REUSE OF DOCUMENTS: THIS DOCUMENT, AND THE IDEAS AND DESIGNS INCORPORATED HEREIN, AS AN INSTRUMENT OF PROFESSIONAL SERVICE, IS THE PROPERTY OF JACOBS AND IS NOT TO BE USED, IN WHOLE OR IN PART, FOR ANY OTHER PROJECT WITHOUT THE WRITTEN AUTHORIZATION OF JACOBS.

Jacobs

DEMOLITION
TRANSFER PUMP ROOM
PHOTO DETAILS

VERIFY SCALE
BAR IS ONE INCH ON ORIGINAL DRAWING.
0 1"

DATE	OCTOBER 2024
PROJ	D3698100
DWG	06-D-103
SHEET	83 of 145

BID DOCUMENTS

©JACOBS 2024. ALL RIGHTS RESERVED.

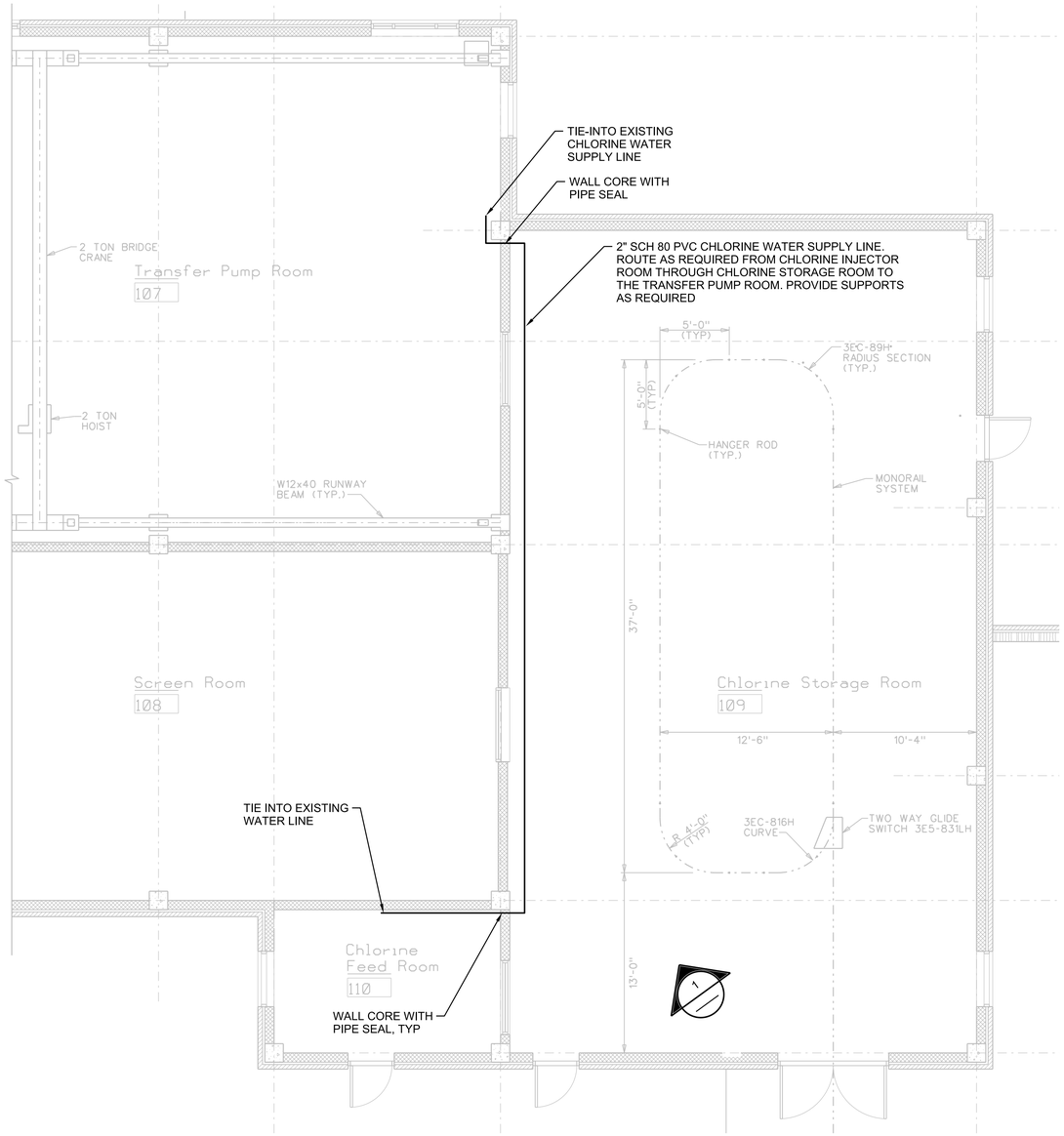

PLAN
3/16"=1'-0"

2 PHOTO
NTS

NO.	DATE	REVISION	BY	APVD

DSGN M LAKEMAN | DR P HAMERLIK | CHK M STICKLEY | APVD M LAKEMAN

Morgan Lakeman
ALABAMA LICENSED PROFESSIONAL ENGINEER PE51134 MORGAN SUMMERLIN LAKEMAN

PAUL B. KREBS WATER TREATMENT PLANT
IMPROVEMENTS
ANNISTON WATER WORKS & SEWER BOARD
CITY OF ANNISTON, ALABAMA

REUSE OF DOCUMENTS: THIS DOCUMENT, AND THE IDEAS AND DESIGNS INCORPORATED HEREIN, AS AN INSTRUMENT OF PROFESSIONAL SERVICE, IS THE PROPERTY OF JACOBS AND IS NOT TO BE USED, IN WHOLE OR IN PART, FOR ANY OTHER PROJECT WITHOUT THE WRITTEN AUTHORIZATION OF JACOBS.

Jacobs

PROCESS MECHANICAL
TRANSFER PUMP ROOM
PLAN AND PHOTO DETAIL

BID DOCUMENTS

VERIFY SCALE
BAR IS ONE INCH ON ORIGINAL DRAWING.
0 1"

DATE	OCTOBER 2024
PROJ	D3698100
DWG	06-D-201
SHEET	84 of 145

©JACOBS 2024. ALL RIGHTS RESERVED.

GENERAL NOTES

1. ALL DI PIPING TO BE PAINTED FOR ALL AIR STRIPPERS AS PART OF BASE BID. SEE 25-D-301 FOR SECTION VIEWS AND DELINEATION OF PIPING.

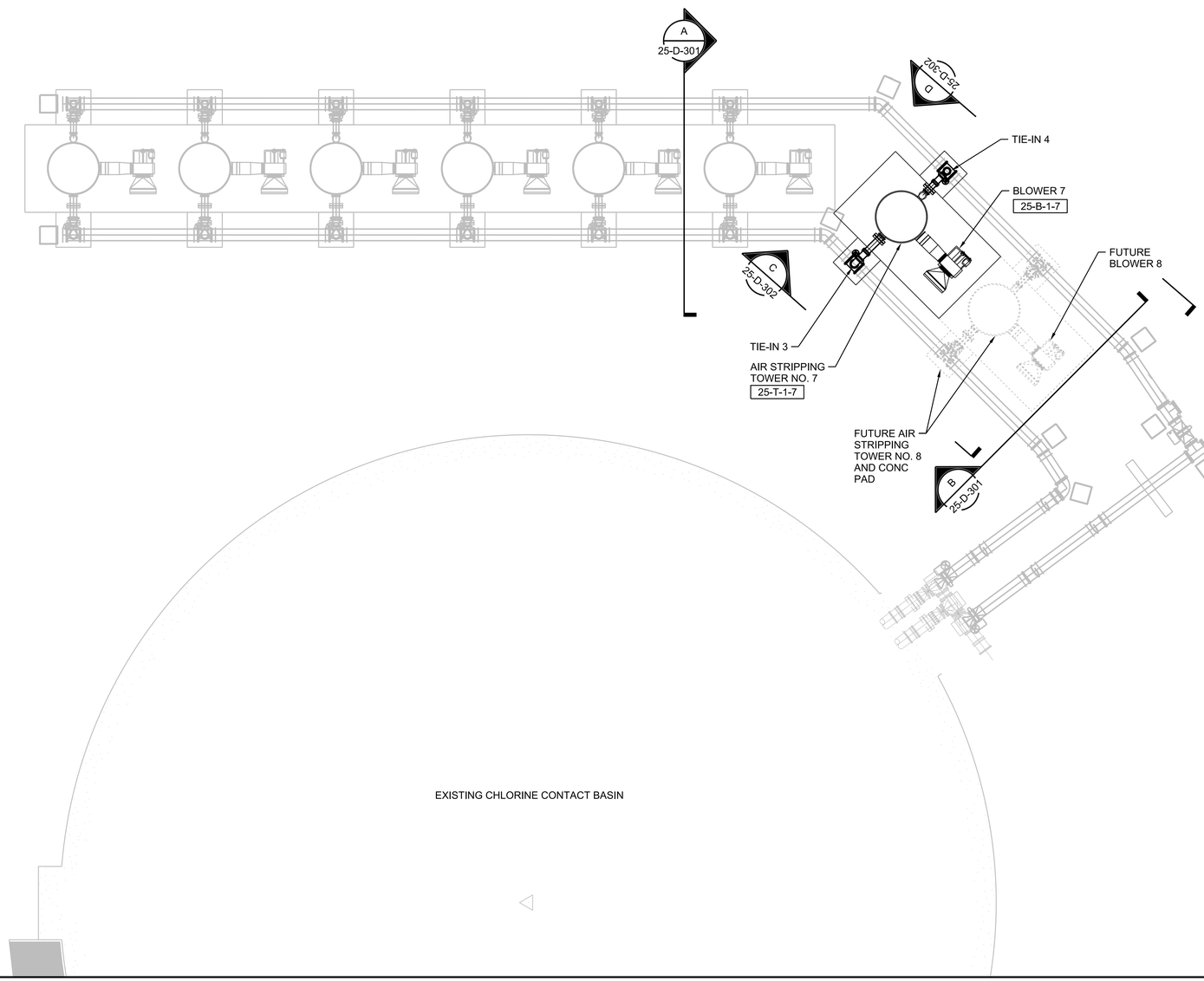

N

0 15 30 45
1" = 15'

NO.	DATE	REVISION	BY	APVD

DSGN M LAKEMAN | DR P HAMERLIK | CHK M STICKLEY | APVD M LAKEMAN

ALABAMA LICENSED PROFESSIONAL ENGINEER MORGAN SUMMERLIN LAKEMAN PE 51124

Morgan Lakeman Digitally signed by Morgan Lakeman DN: cn=Morgan Lakeman, o=Jacobs, ou=Alabama, email=morgan.lakeman@jacobs.com, c=US Date: 2024.10.22 09:47:00 -05'00'

PAUL B. KREBS WATER TREATMENT PLANT
IMPROVEMENTS
ANNISTON WATER WORKS & SEWER BOARD
CITY OF ANNISTON, ALABAMA

REUSE OF DOCUMENTS: THIS DOCUMENT, AND THE IDEAS AND DESIGNS INCORPORATED HEREIN, AS AN INSTRUMENT OF PROFESSIONAL SERVICE, IS THE PROPERTY OF JACOBS AND IS NOT TO BE USED, IN WHOLE OR IN PART, FOR ANY OTHER PROJECT WITHOUT THE WRITTEN AUTHORIZATION OF JACOBS.

Jacobs

PROCESS MECHANICAL
AIR STRIPPING TOWER
PLAN

VERIFY SCALE
BAR IS ONE INCH ON ORIGINAL DRAWING.
0 1"

DATE	OCTOBER 2024
PROJ	D3698100
DWG	25-D-201
SHEET	85 of 145

BID DOCUMENTS

©JACOBS 2024. ALL RIGHTS RESERVED.

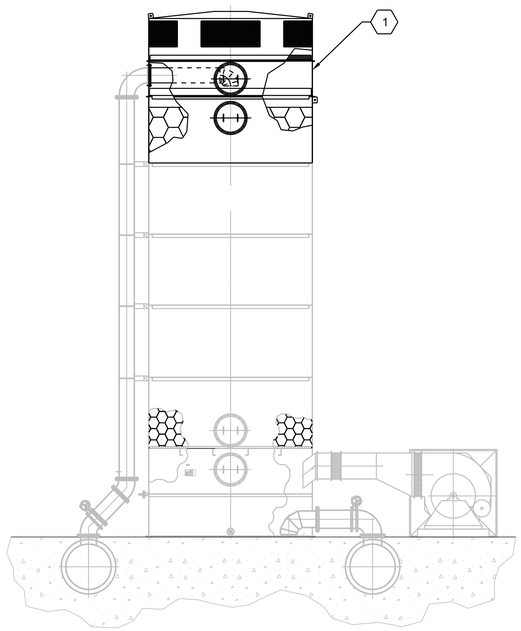

A SECTION
3/16"=1'-0"
25-D-201

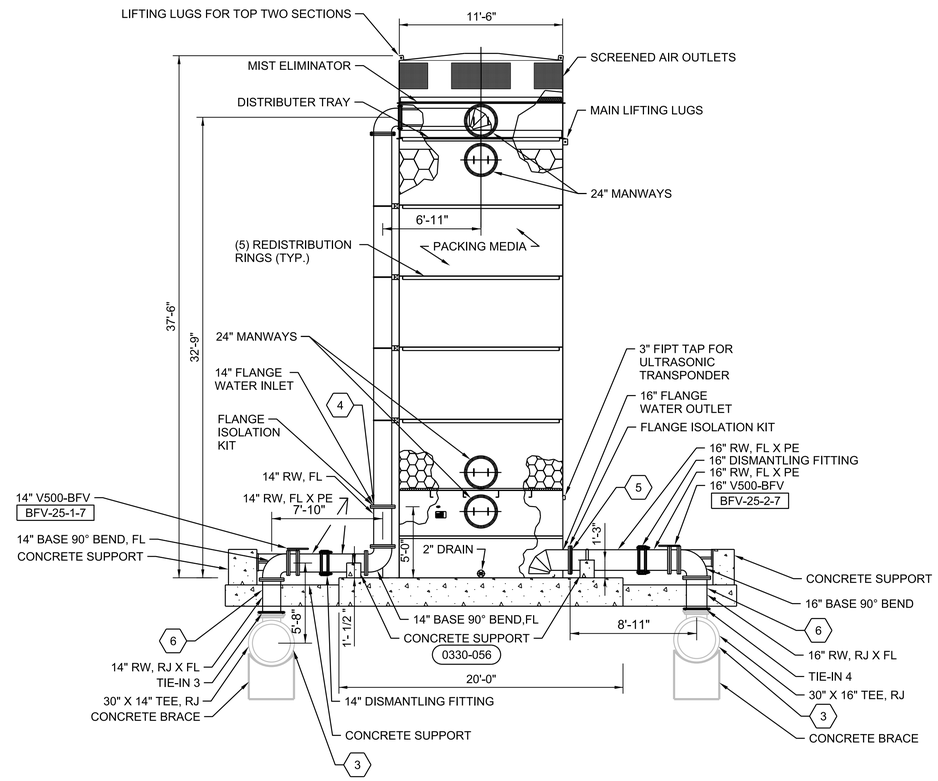

B SECTION
3/16"=1'-0"
25-D-201

GENERAL SHEET NOTES

1. ALL PIPE TO BE DI.

SHEET KEYNOTES

1. PORTIONS OF THE EXISTING AIR STRIPPING TOWERS ARE TO BE REPLACED AS PART OF BID ALTERNATIVE 1. SEE SPECIFICATIONS 44 11 25 GROUNDWATER TREATMENT SYSTEM.
2. NEW AIR STRIPPING TOWER TO BE INSTALLED AS PART OF BID ALTERNATIVE 2. SEE SPECIFICATIONS 44 11 25 GROUNDWATER TREATMENT SYSTEM.
3. CONTRACTOR TO CONNECT TO EXISTING RJ PIPE. CONTRACTOR TO CONFIRM ELEVATION OF EXISTING PIPING.
4. CONTRACTOR TO PROVIDE PIPING UPSTREAM OF 14" FLANGE WATER INLET. AIR STRIPPING TOWER MANUFACTURER TO PROVIDE PIPING DOWNSTREAM 14" FLANGE WATER TO TOWER.
5. CONTRACTOR TO PROVIDE PIPING DOWNSTREAM OF 16" FLANGE WATER INLET. AIR STRIPPING TOWER MANUFACTURER TO PROVIDE PIPING UPSTREAM OF 16" FLANGE WATER TO TOWER.
6. CONTRACTOR TO PROVIDE BOND BREAKER, SUCH AS POLYPROPYLENE OR APPROVED EQUAL.

ALABAMA LICENSED No. PE 51134 PROFESSIONAL ENGINEER MORGAN SUMMERLIN LAKEMAN
Morgan Lakeman
Digitally signed by Morgan Lakeman
Morgan.Lakeman@jacobs.com
Jacobs Engineering Group Inc., ou=Jacobs, cn=Morgan Lakeman, email=Morgan.Lakeman@jacobs.com
2024.10.22 09:20:20 -05'00'

NO.	DATE	REVISION	BY	APVD

DSGN M LAKEMAN | DR P HAMERLIK | CHK M STICKLEY | APVD M LAKEMAN

PAUL B. KREBS WATER TREATMENT PLANT
IMPROVEMENTS
ANNISTON WATER WORKS & SEWER BOARD
CITY OF ANNISTON, ALABAMA

Jacobs

PROCESS MECHANICAL
AIR STRIPPING TOWER SECTION

REUSE OF DOCUMENTS: THIS DOCUMENT, AND THE IDEAS AND DESIGNS INCORPORATED HEREIN, AS AN INSTRUMENT OF PROFESSIONAL SERVICE, IS THE PROPERTY OF JACOBS AND IS NOT TO BE USED, IN WHOLE OR IN PART, FOR ANY OTHER PROJECT WITHOUT THE WRITTEN AUTHORIZATION OF JACOBS.

VERIFY SCALE
BAR IS ONE INCH ON ORIGINAL DRAWING.
0 1"

DATE	OCTOBER 2024
PROJ	D3698100
DWG	25-D-301
SHEET	86 of 145

BID DOCUMENTS

©JACOBS 2024. ALL RIGHTS RESERVED.

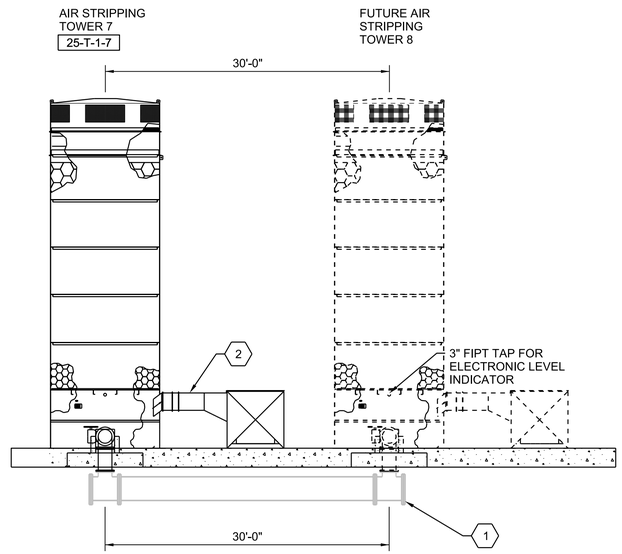

C SECTION
3/8"=1'-0"
25-D201

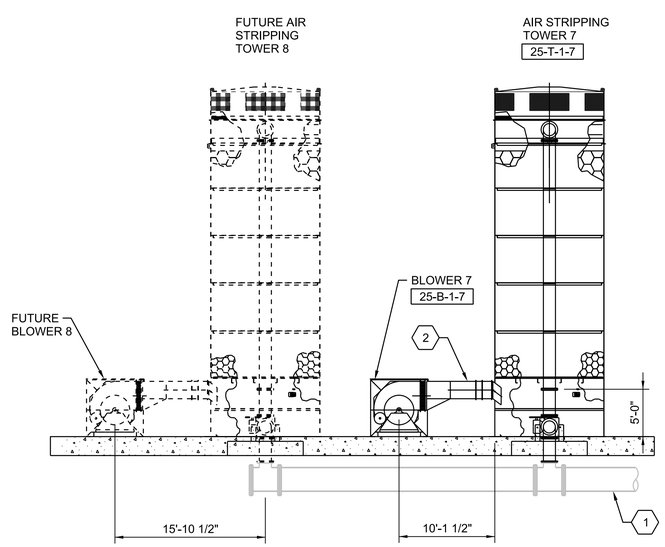

D SECTION
3/8"=1'-0"
25-D201

SHEET KEYNOTES

1. CONTRACTOR TO CONFIRM ELEVATION OF EXISTING PIPING.
2. 22" H X 33" W AIR DUCT, SEE SPECIFICATION 44 11 25 GROUNDWATER TREATMENT SYSTEM.

Morgan Lakeman
ALABAMA LICENSED PROFESSIONAL ENGINEER MORGAN SUMMERLIN LAKEMAN PE5134
Signature: Morgan Lakeman
Date: 2024.10.29

NO.	DATE	REVISION	BY	APVD

DSGN M LAKEMAN | DR P HAMERLIK | CHK M STICKLEY | APVD M LAKEMAN

PAUL B. KREBS WATER TREATMENT PLANT
IMPROVEMENTS
ANNISTON WATER WORKS & SEWER BOARD
CITY OF ANNISTON, ALABAMA

Jacobs

PROCESS MECHANICAL
AIR STRIPPING TOWER SECTION

REUSE OF DOCUMENTS: THIS DOCUMENT, AND THE IDEAS AND DESIGNS INCORPORATED HEREIN, AS AN INSTRUMENT OF PROFESSIONAL SERVICE, IS THE PROPERTY OF JACOBS AND IS NOT TO BE USED, IN WHOLE OR IN PART, FOR ANY OTHER PROJECT WITHOUT THE WRITTEN AUTHORIZATION OF JACOBS.

VERIFY SCALE
BAR IS ONE INCH ON ORIGINAL DRAWING,
0 1"

DATE	OCTOBER 2024
PROJ	D3698100
DWG	25-D-302
SHEET	87 of 145

BID DOCUMENTS

©JACOBS 2024. ALL RIGHTS RESERVED.

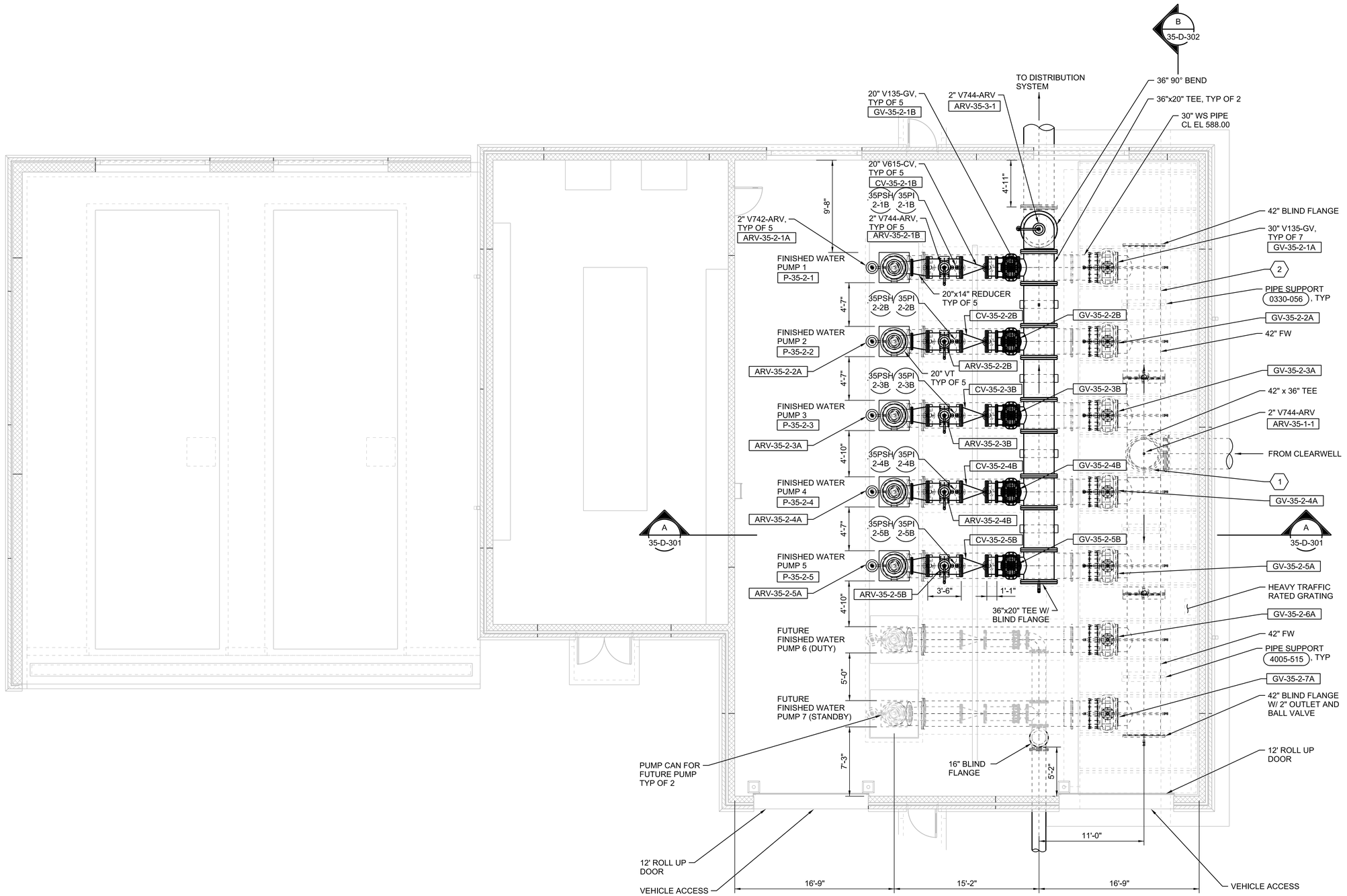

N PLAN
3/16"=1'-0"

SHEET KEYNOTES

1. 42" WELDED STEEL PIPING TO HAVE A 36" FLANGE TO CONNECT TO 36" DI FINISHED WATER PIPING.
2. 42" AND 30" SUCTION PIPING TO BE WELDED STEEL.

ALABAMA LICENSED PROFESSIONAL ENGINEER
Morgan Lakeman
No. PE51134
Morgan Lakeman
Date: 2024.10.22 09:15:00 -05'00'
MORGAN SUMMERLIN LAKEMAN

NO.	DATE	REVISION	BY	APVD

DSGN M LAKEMAN | DR P HAMERLIK | CHK M STICKLEY | APVD M LAKEMAN

PAUL B. KREBS WATER TREATMENT PLANT IMPROVEMENTS
ANNISTON WATER WORKS & SEWER BOARD
CITY OF ANNISTON, ALABAMA

REUSE OF DOCUMENTS: THIS DOCUMENT, AND THE IDEAS AND DESIGNS INCORPORATED HEREIN, AS AN INSTRUMENT OF PROFESSIONAL SERVICE, IS THE PROPERTY OF JACOBS AND IS NOT TO BE USED, IN WHOLE OR IN PART, FOR ANY OTHER PROJECT WITHOUT THE WRITTEN AUTHORIZATION OF JACOBS.

Jacobs

PROCESS MECHANICAL
FINISHED WATER PUMP STATION PLAN

BID DOCUMENTS

VERIFY SCALE
BAR IS ONE INCH ON ORIGINAL DRAWING.
0 1"

DATE	OCTOBER 2024
PROJ	D3698100
DWG	35-D-201
SHEET	88 of 145

FILENAME: 35-D-201_D3698100.dgn PLOT DATE: 10/22/2024 PLOT TIME: 1:07:14 PM

©JACOBS 2024. ALL RIGHTS RESERVED.

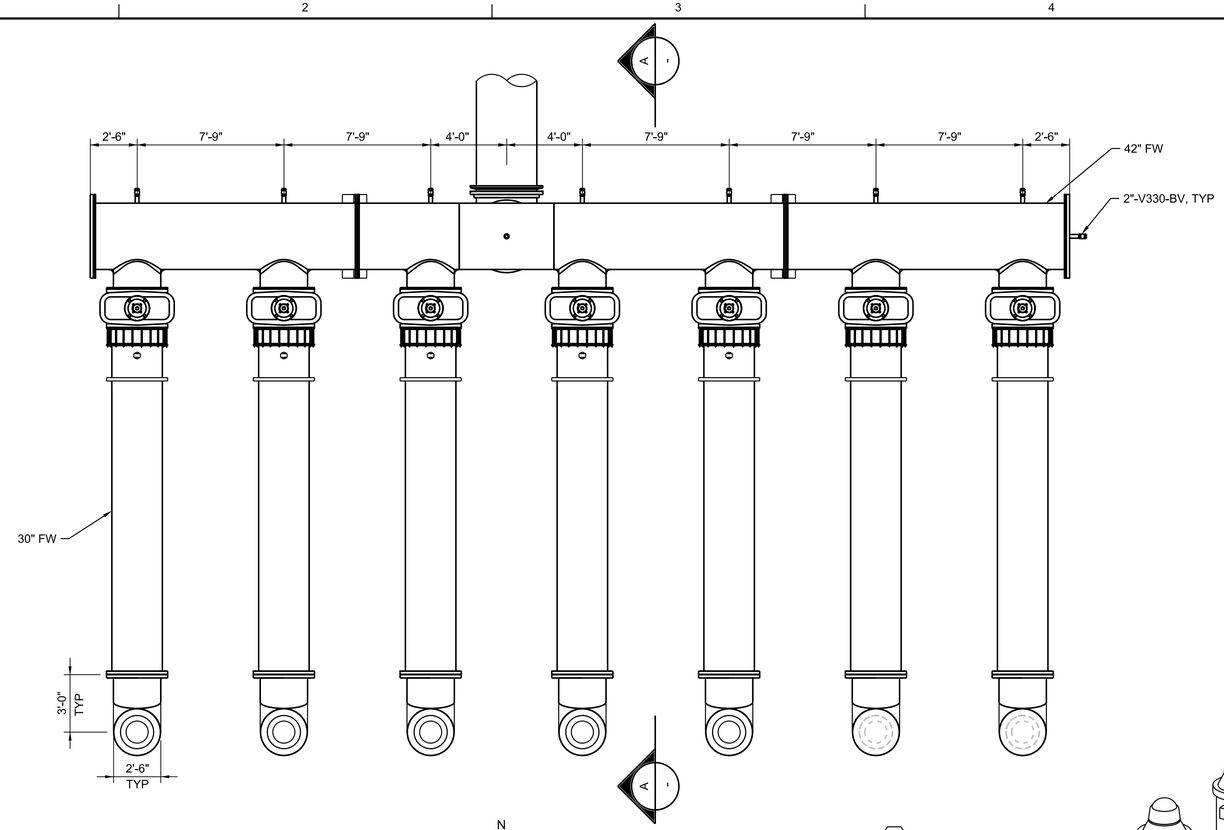

N

PLAN
1/4"=1'-0"

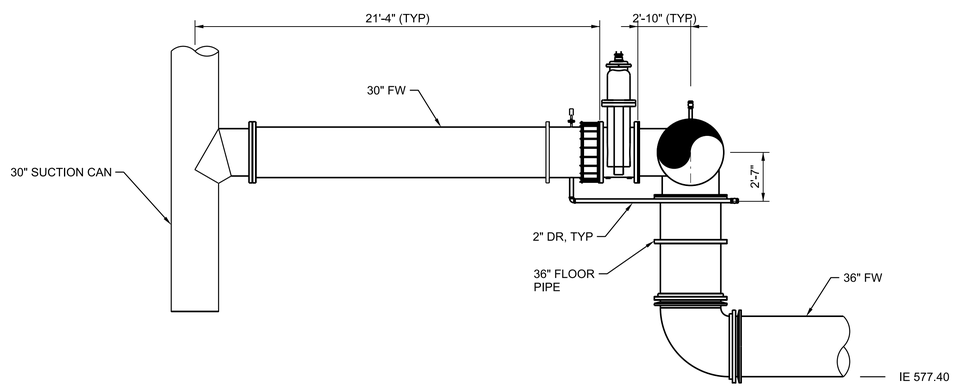

A SECTION
1/4"=1-0"

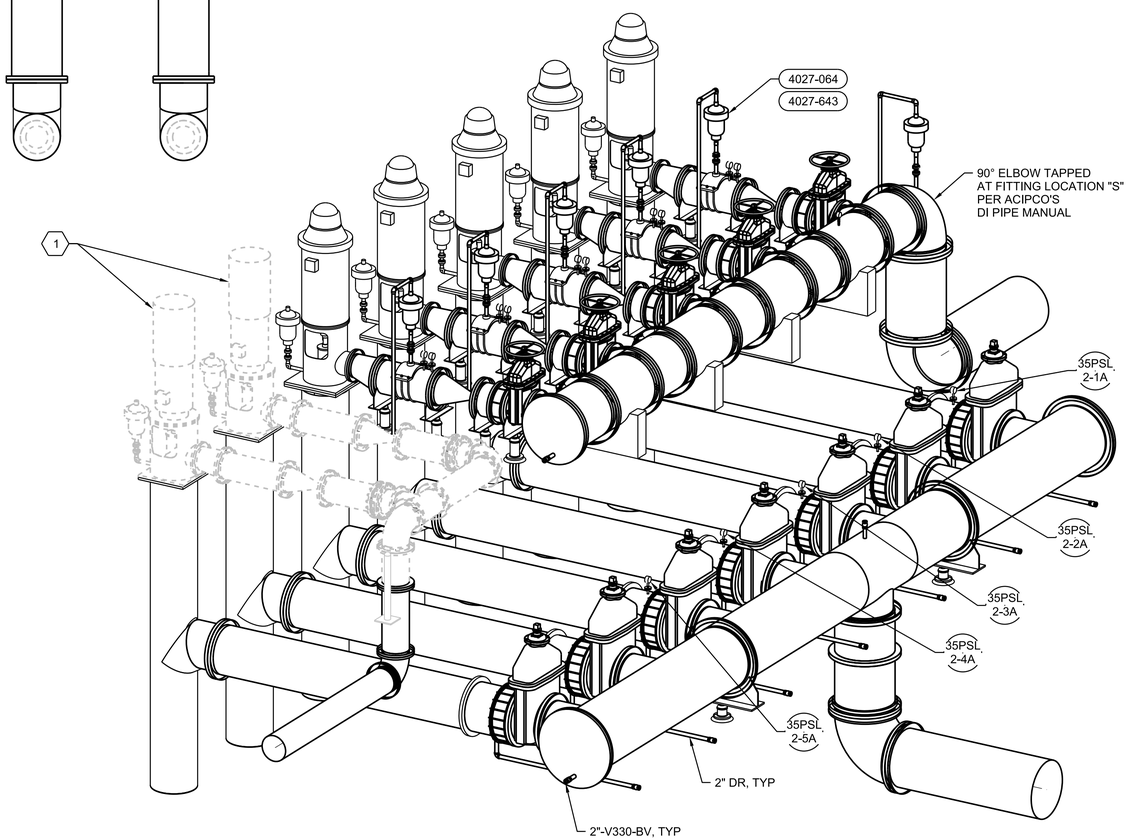

ISOMETRIC VIEW
NTS

SHEET KEYNOTES

1. CONTRACTOR TO INSTALL CANS AND SUCTION PIPE FOR FUTURE PUMPS.

ALABAMA LICENSED PROFESSIONAL ENGINEER MORGAN SUMMERLIN LAKEMAN
Morgan Lakeman PE51134
Signature: Morgan Lakeman (Jacobs)
Email: morgan.lakeman@jacobs.com
Date: 2024.10.22 09:55:00 -05'00'

NO.	DATE	REVISION	BY	APVD

DSGN M LAKEMAN | DR L MATULA | CHK M STICKLEY | APVD M LAKEMAN

PAUL B. KREBS WATER TREATMENT PLANT
IMPROVEMENTS
ANNISTON WATER WORKS & SEWER BOARD
CITY OF ANNISTON, ALABAMA

Jacobs

PROCESS MECHANICAL
FINISHED WATER PUMP STATION
SUCTION PIPING
PLAN

REUSE OF DOCUMENTS: THIS DOCUMENT, AND THE IDEAS AND DESIGNS INCORPORATED HEREIN, AS AN INSTRUMENT OF PROFESSIONAL SERVICE, IS THE PROPERTY OF JACOBS AND IS NOT TO BE USED, IN WHOLE OR IN PART, FOR ANY OTHER PROJECT WITHOUT THE WRITTEN AUTHORIZATION OF JACOBS.

VERIFY SCALE
BAR IS ONE INCH ON ORIGINAL DRAWING.
0 1"

DATE	OCTOBER 2024
PROJ	D3698100
DWG	35-D-202
SHEET	89 of 145

BID DOCUMENTS

©JACOBS 2024. ALL RIGHTS RESERVED.

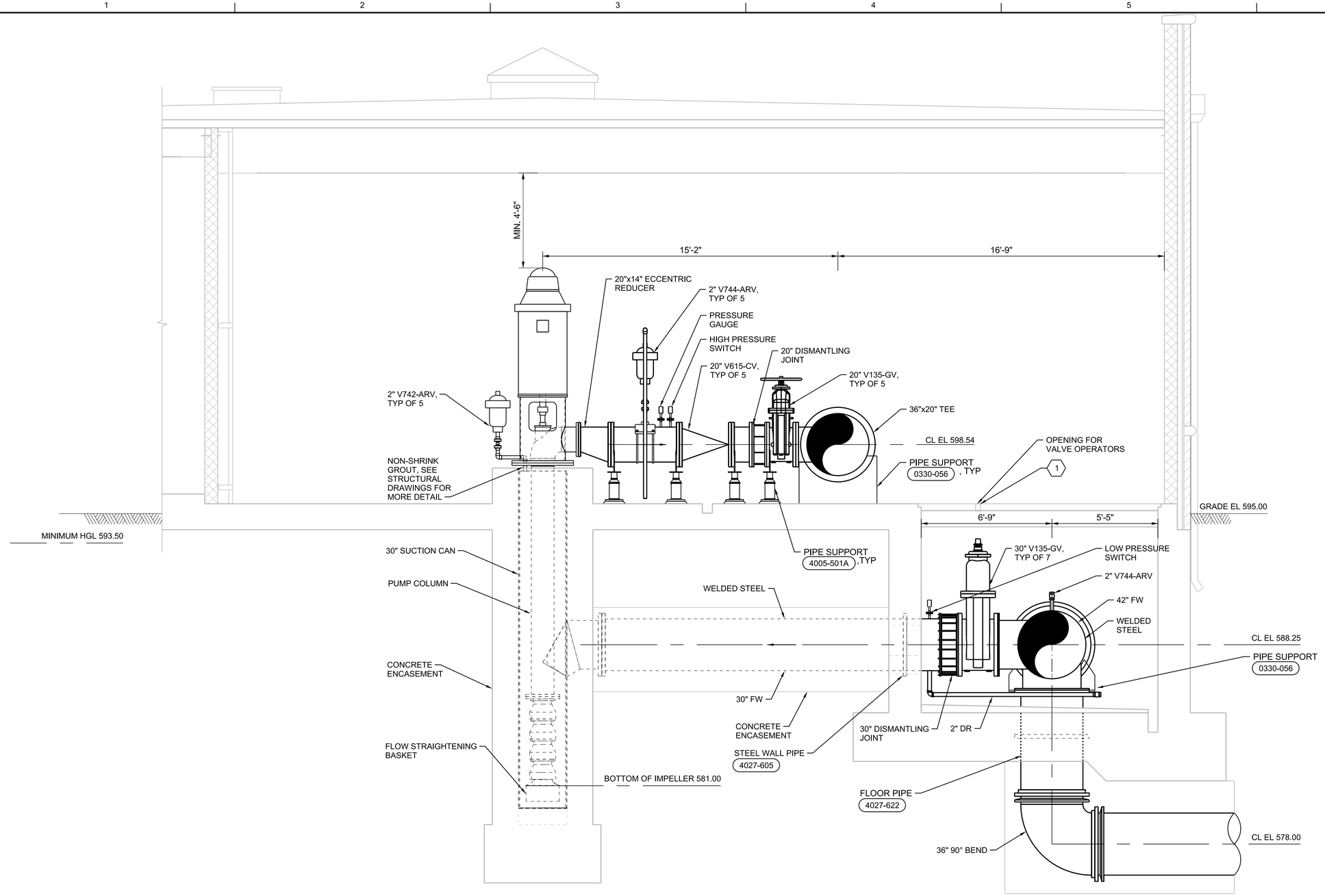

A SECTION
3/8"=1'-0"
35-D-201

SHEET KEYNOTES

1. CONTRACTOR TO PROVIDE ACCESS THROUGH HEAVY DUTY GRATING TO VALVE OPERATOR IN TRENCH.

Morgan Lakeman

NO.	DATE	REVISION	BY	APVD

DSGN M LAKEMAN | DR P HAMERLIK | CHK M STICKLEY | APVD M LAKEMAN

PAUL B. KREBS WATER TREATMENT PLANT
IMPROVEMENTS
ANNISTON WATER WORKS & SEWER BOARD
CITY OF ANNISTON, ALABAMA

Jacobs

PROCESS MECHANICAL
FINISHED WATER PUMP STATION
SECTION

REUSE OF DOCUMENTS: THIS DOCUMENT, AND THE IDEAS AND DESIGNS INCORPORATED HEREIN, AS AN INSTRUMENT OF PROFESSIONAL SERVICE, IS THE PROPERTY OF JACOBS AND IS NOT TO BE USED, IN WHOLE OR IN PART, FOR ANY OTHER PROJECT WITHOUT THE WRITTEN AUTHORIZATION OF JACOBS.

VERIFY SCALE
BAR IS ONE INCH ON ORIGINAL DRAWING.
0 1"

DATE	OCTOBER 2024
PROJ	D3698100
DWG	35-D-301
SHEET	90 of 145

BID DOCUMENTS

FILENAME: 35-D-301_D3698100.dgn PLOT DATE: PLOT TIME:

©JACOBS 2024. ALL RIGHTS RESERVED.

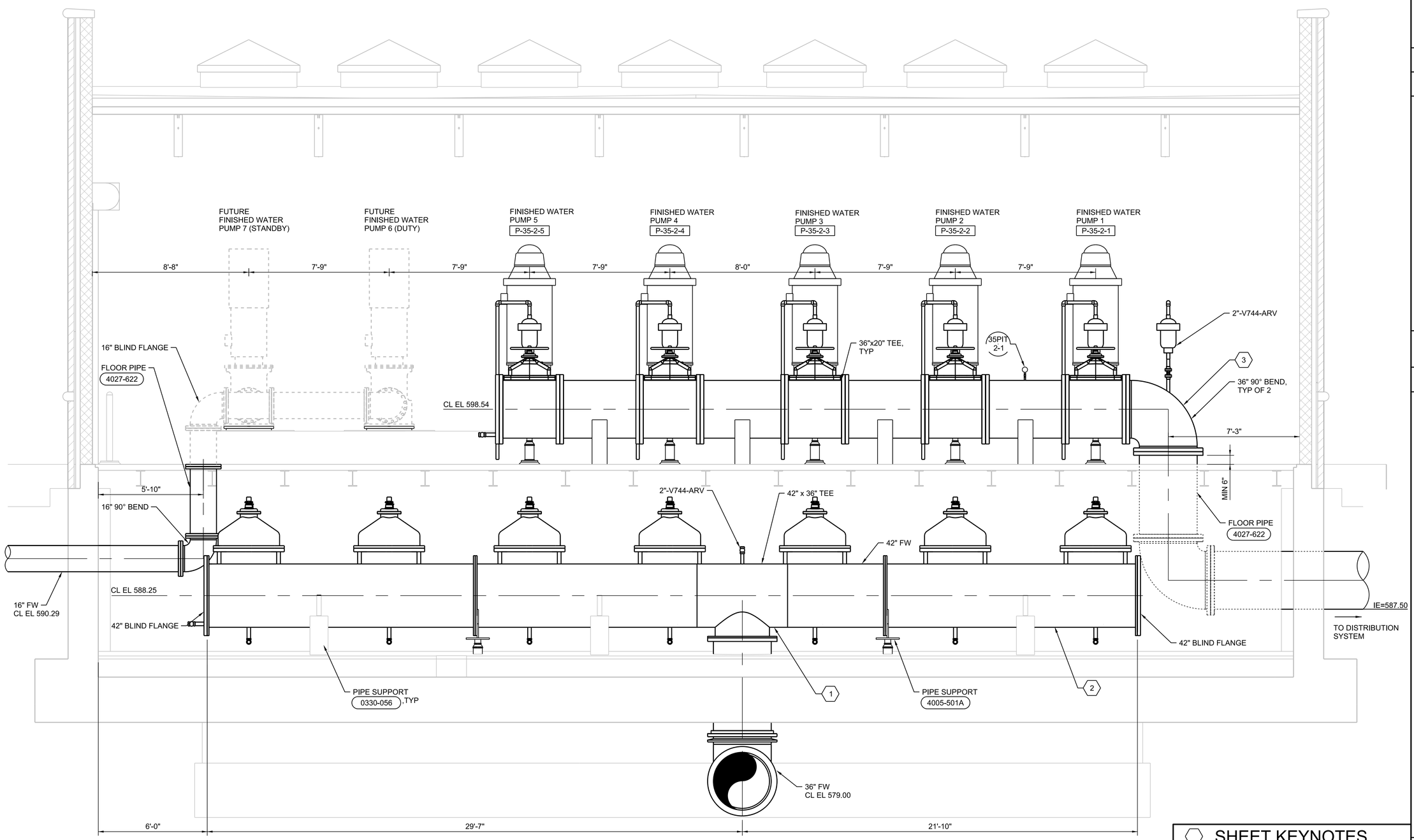

B SECTION
3/8"=1'-0"
35-D-201

SHEET KEYNOTES

1. 42" WELDED STEEL PIPING TO HAVE A 36" FLANGE TO CONNECT TO 36" DI FINISHED WATER PIPING..
2. 42" AND 30" SUCTION PIPING TO BE WELDED STEEL.
3. 16", 20" AND 36" DISCHARGE PIPING FROM VERTICAL TURBINE PUMPS TO BE DUCTILE IRON.

ALABAMA LICENSED PROFESSIONAL ENGINEER
Morgan Lakeman
PE51134
Digitally signed by Morgan Lakeman
Date: 2024.03.28 08:37:00 -05'00'
MORGAN SUMMERLIN LAKEMAN

NO.	DATE	REVISION	BY	APVD

DSGN M LAKEMAN | DR P HAMERLIK | CHK M STICKLEY | APVD M LAKEMAN

PAUL B. KREBS WATER TREATMENT PLANT
IMPROVEMENTS
ANNISTON WATER WORKS & SEWER BOARD
CITY OF ANNISTON, ALABAMA

REUSE OF DOCUMENTS: THIS DOCUMENT, AND THE IDEAS AND DESIGNS INCORPORATED HEREIN, AS AN INSTRUMENT OF PROFESSIONAL SERVICE, IS THE PROPERTY OF JACOBS AND IS NOT TO BE USED, IN WHOLE OR IN PART, FOR ANY OTHER PROJECT WITHOUT THE WRITTEN AUTHORIZATION OF JACOBS.

Jacobs

PROCESS MECHANICAL
FINISHED WATER PUMP STATION
SECTION

VERIFY SCALE
BAR IS ONE INCH ON ORIGINAL DRAWING.
0 1"

DATE	OCTOBER 2024
PROJ	D3698100
DWG	35-D-302
SHEET	91 of 145

BID DOCUMENTS

FILENAME: 35-D-302_D3698100.dgn PLOT DATE: PLOT TIME:

©JACOBS 2024. ALL RIGHTS RESERVED.

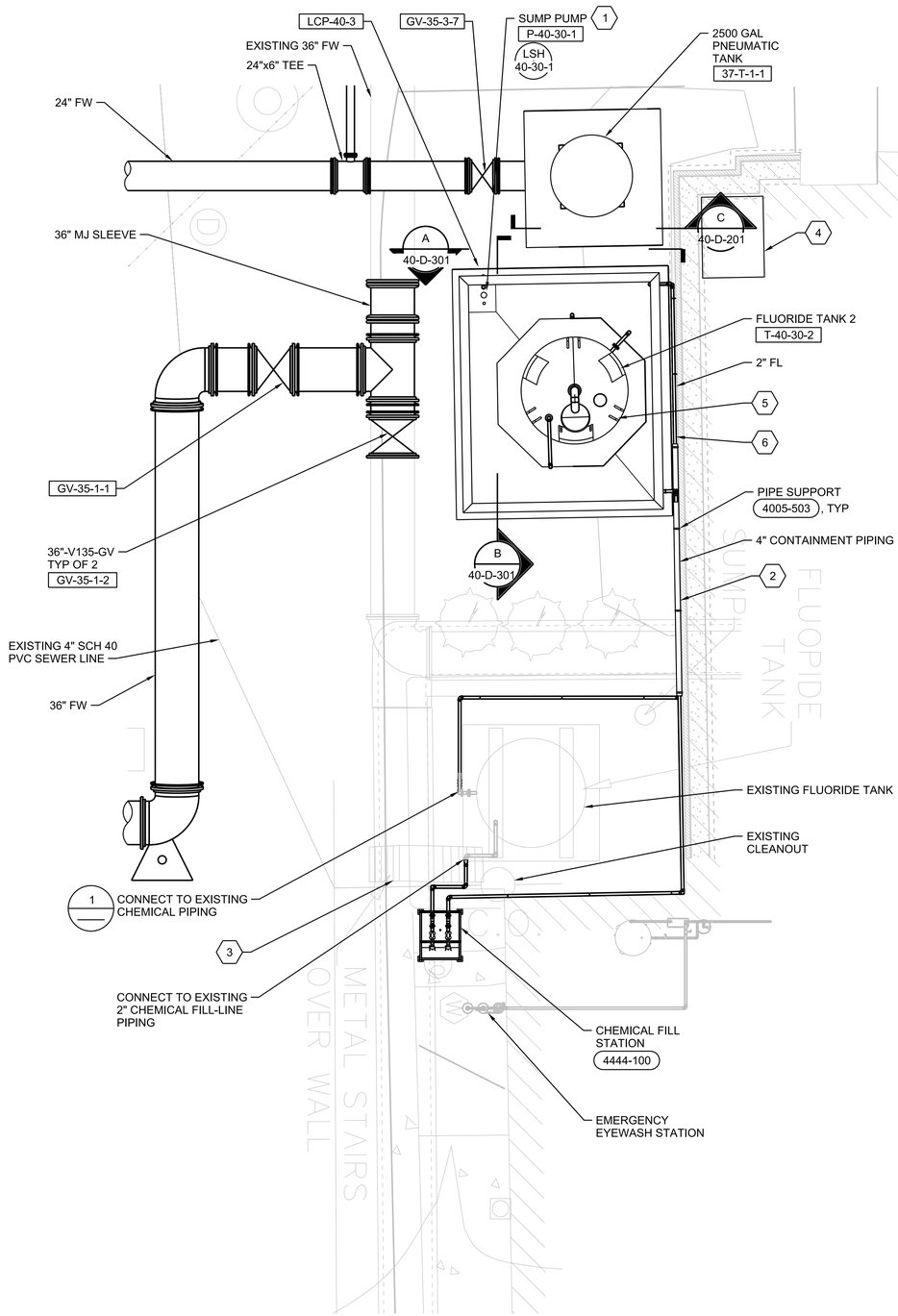

PLAN

3/16"=1'-0"

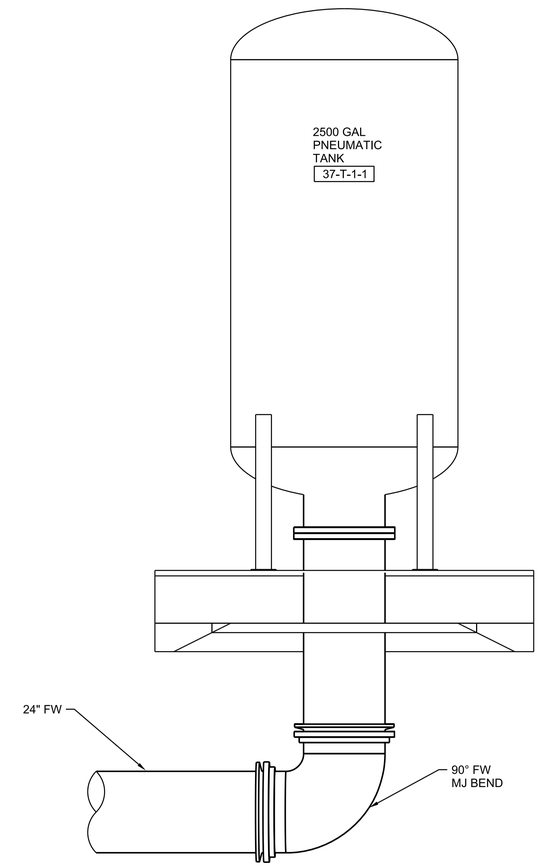

SECTION C

1/2"=1'-0"

40-D-201

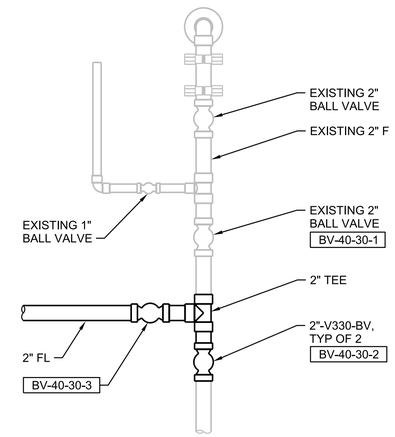

DETAIL 1

1"=1'-0"

SHEET KEYNOTES

1. CONTRACTOR TO INSTALL SUMP PUMP ACCORDING TO THE FOLLOWING:
   ZOELLER M267
   0.5HP
   115V
   2" DISCHARGE
   85 GPM
   10 TDH
2. ANY 2" CPVC CHEMICAL PIPING OUTSIDE OF THE CONTAINMENT AREAS TO HAVE 4" CPVC CONTAINMENT PIPING.
3. CONTRACTOR TO MOVE EXISTING ACCESS LADDER TO WEST SIDE OF EXISTING CONTAINMENT AREA NEAR SOUTHWEST CORNER.
4. AIR CONTROL CENTER/COMPRESSOR SYSTEM AND ASSOCIATED EQUIPMENT FOR PNEUMATIC TANK TO BE LOCATED INSIDE EXISTING PUMP STATION. COORDINATE LOCATION WITH MANUFACTURER AND CLIENT.
5. CLIENT PURCHASED FLUORIDE TANK. CONTRACTOR TO INSTALL PER MANUFACTURERS RECOMMENDATIONS.
6. CHEMICAL PIPING TO FOLLOW EXISTING BUILDING WINDOW SILL TO EXISTING FLUORIDE CONTAINMENT AREA

ALABAMA LICENSED PROFESSIONAL ENGINEER
Morgan Summerlin Lakeman
PE51134
Digitally signed by Morgan Summerlin Lakeman
Date: 2024.10.28 14:28:47 -05'00'

NO.	DATE	REVISION	BY	APVD

DSGN M LAKEMAN | DR P HAMERLIK | CHK M STICKLEY | APVD M LAKEMAN

REUSE OF DOCUMENTS: THIS DOCUMENT, AND THE IDEAS AND DESIGNS INCORPORATED HEREIN, AS AN INSTRUMENT OF PROFESSIONAL SERVICE, IS THE PROPERTY OF JACOBS AND IS NOT TO BE USED, IN WHOLE OR IN PART, FOR ANY OTHER PROJECT WITHOUT THE WRITTEN AUTHORIZATION OF JACOBS.

PAUL B. KREBS WATER TREATMENT PLANT
IMPROVEMENTS
ANNISTON WATER WORKS & SEWER BOARD
CITY OF ANNISTON, ALABAMA

Jacobs

PROCESS MECHANICAL
FLUORIDE TANK
PLAN AND SECTIONS

VERIFY SCALE
BAR IS ONE INCH ON ORIGINAL DRAWING.
0 1"

DATE	OCTOBER 2024
PROJ	D3698100
DWG	40-D-201
SHEET	92 of 145

BID DOCUMENTS

©JACOBS 2024. ALL RIGHTS RESERVED.

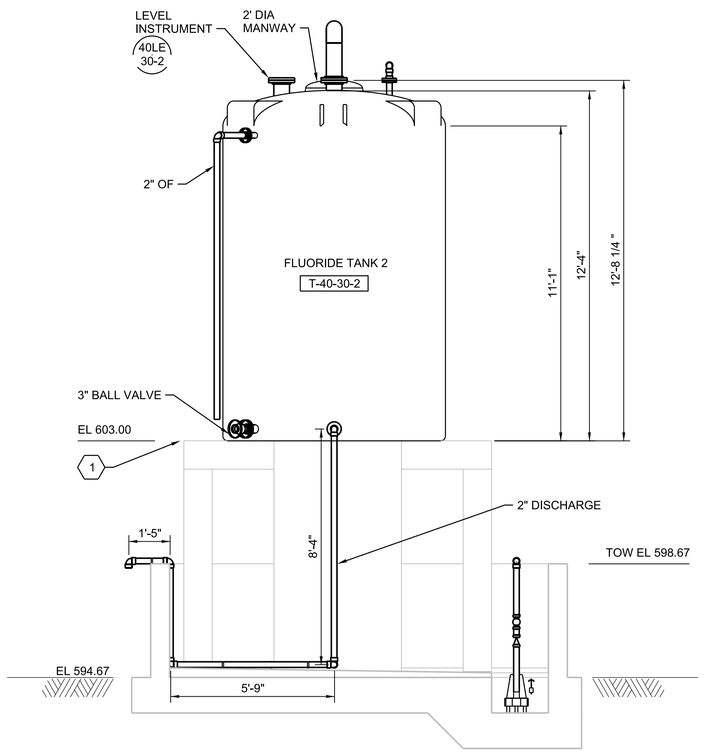

A SECTION
3/8"=1'-0"
40-D-201

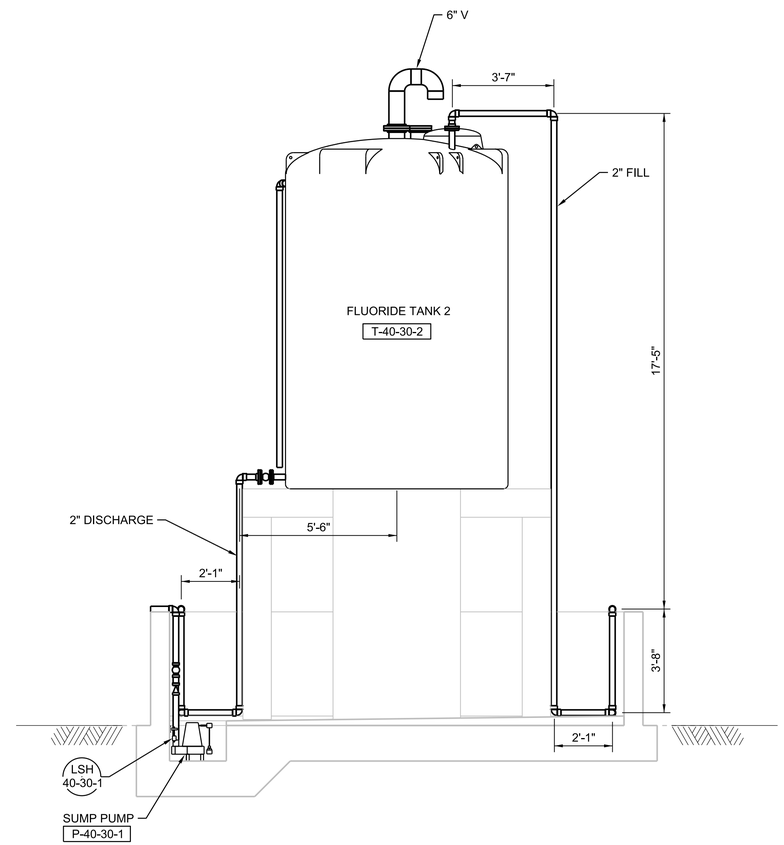

B SECTION
3/8"=1'-0"
40-D-201

SHEET KEYNOTES

1. TANK SUPPORT ELEVATION TO MATCH EXISTING FLUORIDE TANK SUPPORT ELEVATION.

Morgan Lakeman
ALABAMA LICENSED PROFESSIONAL ENGINEER
PE51134
Digitally signed by Morgan Lakeman
Date: 2024.10.28 09:37:00 -05'00'
MORGAN SUMMERLIN LAKEMAN

NO.	DATE	REVISION	BY	APVD

DSGN M LAKEMAN | DR J PATTERSON | CHK M STICKLEY | APVD M LAKEMAN

PAUL B. KREBS WATER TREATMENT PLANT
IMPROVEMENTS
ANNISTON WATER WORKS & SEWER BOARD
CITY OF ANNISTON, ALABAMA

Jacobs

PROCESS MECHANICAL
FLUORIDE TANK SECTIONS

REUSE OF DOCUMENTS: THIS DOCUMENT, AND THE IDEAS AND DESIGNS INCORPORATED HEREIN, AS AN INSTRUMENT OF PROFESSIONAL SERVICE, IS THE PROPERTY OF JACOBS AND IS NOT TO BE USED, IN WHOLE OR IN PART, FOR ANY OTHER PROJECT WITHOUT THE WRITTEN AUTHORIZATION OF JACOBS.

VERIFY SCALE
BAR IS ONE INCH ON ORIGINAL DRAWING.
0 1"

DATE	OCTOBER 2024
PROJ	D3698100
DWG	40-D-301
SHEET	93 of 145

BID DOCUMENTS

©JACOBS 2024. ALL RIGHTS RESERVED.

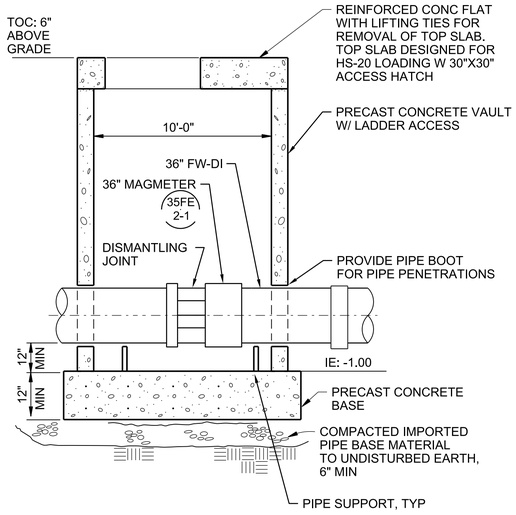

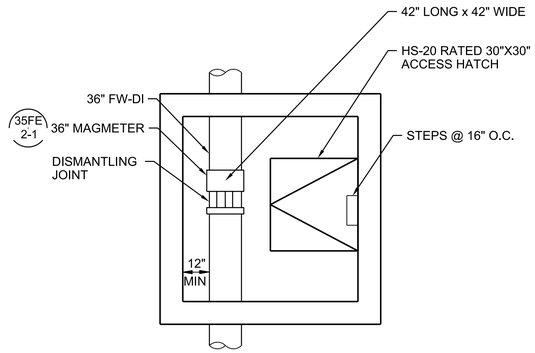

FLOW METER VAULT

NTS

3305-750

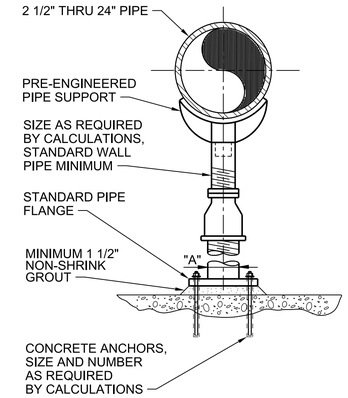

DIMENSION TABLE	
PIPE SIZE	"A" MINIMUM NOMINAL PIPE SIZE
2-1/2"	2-1/2"
3"	2-1/2"
4"	3"
6"	3"
8"	3"
10"	3"
12"	3"
14"	4"
16"	4"
20"	6"
24"	6"
36"	6"

NOTE:
SUBMIT FINAL DESIGN AND CALCULATIONS FOR SUPPORT AND ANCHORAGE AS SPECIFIED.

PIPE SUPPORT
SADDLE SUPPORT PEDESTAL TYPE - ADJUSTABLE

NTS

4005-500

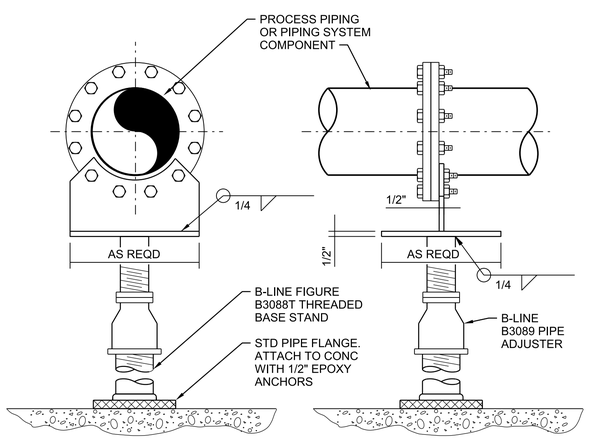

PIPE SUPPORT
FLANGE ATTACHMENT TYPE - ADJUSTABLE

NTS

4005-501A

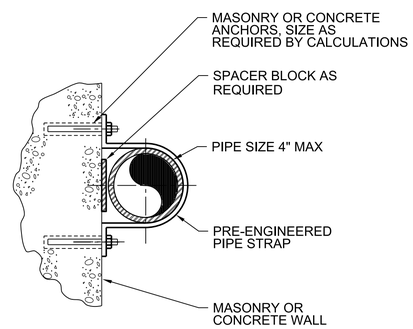

NOTES:

1. ONLY FOR VERTICAL PIPES.
2. NOT FOR USE ON CEILINGS OR BOTTOMS OF BEAMS.
3. PROVIDE PIPE PROTECTION BARRIER AS SPECIFIED. FABRICATE OVERSIZE STRAP WHERE REQUIRED.
4. SUBMIT FINAL DESIGN AND CALCULATIONS FOR SUPPORT AND ANCHORAGE AS SPECIFIED.

PIPE SUPPORT - WALL MOUNT

NTS

4005-503

NO.	DATE	REVISION	BY	APVD

DSGN M LAKEMAN | DR P HAMERLIK | CHK M STICKLEY | APVD M LAKEMAN

PAUL B. KREBS WATER TREATMENT PLANT
IMPROVEMENTS
ANNISTON WATER WORKS & SEWER BOARD
CITY OF ANNISTON, ALABAMA

PROCESS MECHANICAL
STANDARD DETAILS

REUSE OF DOCUMENTS: THIS DOCUMENT, AND THE IDEAS AND DESIGNS INCORPORATED HEREIN, AS AN INSTRUMENT OF PROFESSIONAL SERVICE, IS THE PROPERTY OF JACOBS AND IS NOT TO BE USED, IN WHOLE OR IN PART, FOR ANY OTHER PROJECT WITHOUT THE WRITTEN AUTHORIZATION OF JACOBS.

VERIFY SCALE
BAR IS ONE INCH ON ORIGINAL DRAWING.
0 1"

DATE	OCTOBER 2024
PROJ	D3698100
DWG	99-D-501
SHEET	94 of 145

BID DOCUMENTS

©JACOBS 2024. ALL RIGHTS RESERVED.

DIMENSIONS IN INCHES								
NOMINAL PIPE SIZE					SUPPORTING			
					PIPE		FLANGE	
	'A'	'B'	'C'	'D'	'E'	'F'	'E'	'F'
6	4	6	3/8	5/8	4 1/2	10	6 1/2	13
8	4	6	3/8	5/8	5	11	7 1/2	14
10	4	6	3/8	5/8	6	12	9	15
12	4	6	3/8	5/8	7	13	10	16
14	4	6	3/8	5/8	8	14	11	17
16	4	6	3/8	5/8	9	15	12	18
18	4	6	3/8	5/8	10	16	13	19
20	5	6	3/8	5/8	10	17	15	21
22	5	6	3/8	5/8	12	18	16	22
24	5	6	3/8	5/8	13	19	16	23
26	5	6	3/8	3/4	14	20	18	24
30	5	6	3/8	3/4	16	22	20	26
34	5	6	3/8	3/4	18	24	22	29
36	6	6	3/8	3/4	19	25	24	30
42	6	8	1/2	1	21	28	27	33
48	6	8	1/2	1	24	31	30	37
54	6	8	1/2	1	28	34	34	40
60	6	8	1/2	1 1/8	32	37	36	44
66	6	8	1/2	1 1/8	33	40	40	47
72	6	8	1/2	1 1/8	36	43	44	50

NOTES:

1. CONFIRM SUPPORTING BEAM FLANGE WIDTH MEETS OR EXCEEDS SADDLE WIDTH 'B'
2. HOT DIP GALVANIZE AFTER FABRICATION.
3. USE A325 BOLTS AND ANCHOR BOLTS.

4005-515

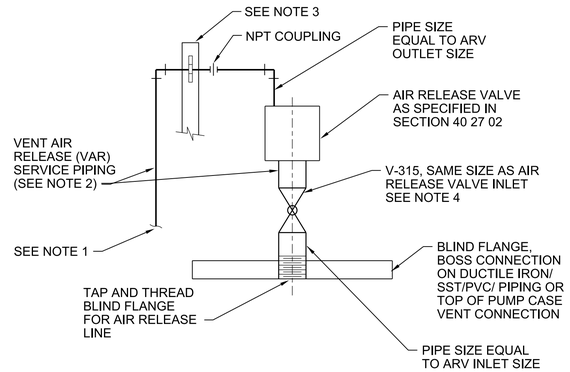

NOTES:

1. ROUTE VENT TO FLOOR DRAIN/TRENCH DRAIN FOR INTERIOR INSTALLATION. FOR EXTERIOR INSTALLATION ROUTE VENT OFF PAD TO GRADE OR TO DRAIN.
2. VAR PIPING MATERIAL AS SPECIFIED IN SECTION 40 27 00.
3. SECURE PIPING AGAINST VIBRATION BY FASTENING TO STANCHION SUPPORT 4005-495
4. PROVIDE V-400 FOR RAW SEWAGE AND SLUDGE APPLICATIONS.

AIR RELEASE VALVE ASSEMBLY

NTS

4027-064

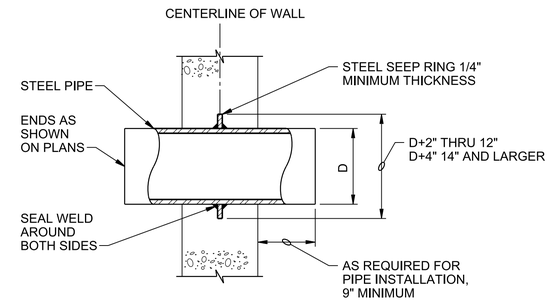

STEEL WALL PIPE

NTS

4027-605

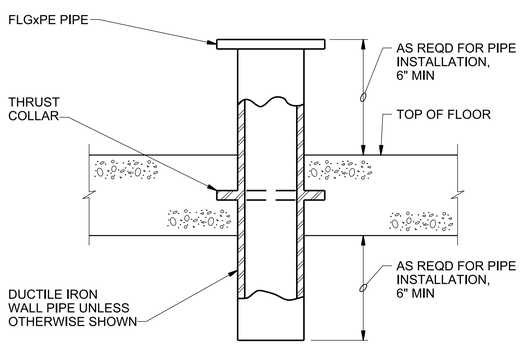

NOTES:

1. COAT FLOOR PIPE WITH SPECIFIED PAINT SYSTEM PRIOR TO CONCRETE PLACEMENT.

FLOOR PIPE

NTS

4027-622

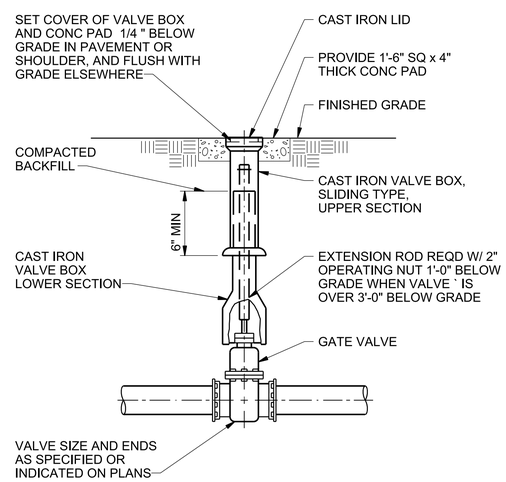

BURIED GATE VALVE BOX

NTS

4027-640

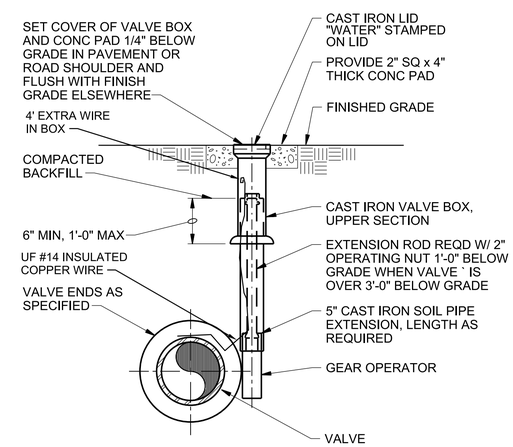

BURIED VALVE AND BOX - SIDE MOUNT

NTS

4027-641

ALABAMA LICENSED PROFESSIONAL ENGINEER MORGAN SUMMERLIN LAKEMAN

Morgan Lakeman PE51134 Digitally signed by Morgan Lakeman Date: 2024.10.22 08:31:00 -05'00'

NO.	DATE	REVISION	BY	APVD

DSGN M LAKEMAN | DR L MATULA | CHK M STICKLEY | APVD M LAKEMAN

PAUL B. KREBS WATER TREATMENT PLANT IMPROVEMENTS
ANNISTON WATER WORKS & SEWER BOARD
CITY OF ANNISTON, ALABAMA

REUSE OF DOCUMENTS: THIS DOCUMENT, AND THE IDEAS AND DESIGNS INCORPORATED HEREIN, AS AN INSTRUMENT OF PROFESSIONAL SERVICE, IS THE PROPERTY OF JACOBS AND IS NOT TO BE USED, IN WHOLE OR IN PART, FOR ANY OTHER PROJECT WITHOUT THE WRITTEN AUTHORIZATION OF JACOBS.

Jacobs

PROCESS MECHANICAL
STANDARD DETAILS

VERIFY SCALE
BAR IS ONE INCH ON ORIGINAL DRAWING.
0 1"

DATE	OCTOBER 2024
PROJ	D3698100
DWG	99-D-502
SHEET	95 of 145

BID DOCUMENTS

©JACOBS 2024. ALL RIGHTS RESERVED.

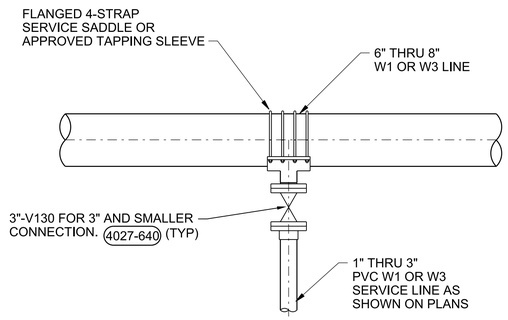

PLAN

SERVICE TAP

NTS

4027-643

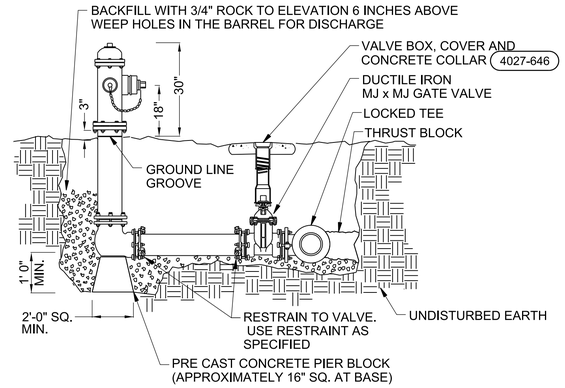

HYDRANT SECTION VIEW

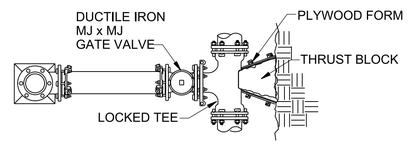

HYDRANT PLAN VIEW

NOTE:
1. NEW HYDRANT TO BE PROVIDED BY OWNER, WHERE NOTED

LOCKED TEE FIRE HYDRANT SET

NTS

4027-646

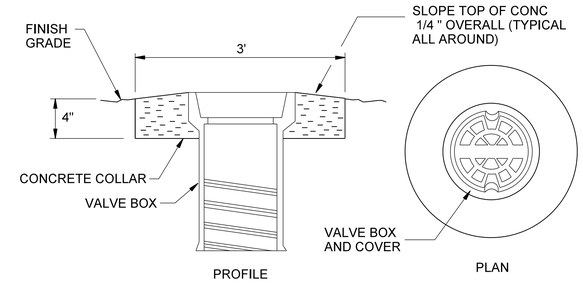

VALVE BOX PAD

NTS

4027-647

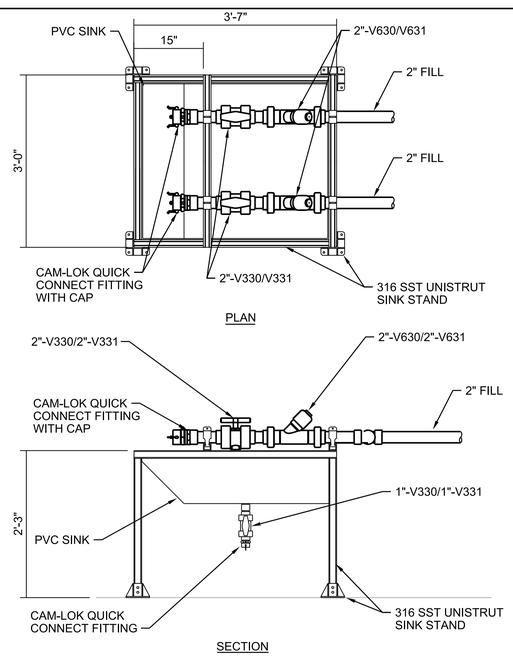

NOTE: VALVE BODY, BALL AND STEM MATERIALS SHALL MATCH THE MATERIAL OF THE ADJOINING PIPELINE.

CHEMICAL FILL STATION

NTS

4444-100

ALABAMA LICENSED PROFESSIONAL ENGINEER
Logan Lakeman
No. PE51134
Digitally signed by Logan Lakeman
DN: cn=Logan Lakeman, o=Jacobs, ou=Jacobs, email=Logan.Lakeman@jacobs.com, c=US
Date: 2024.10.22 15:31:21 -05'00'
LOGAN SUMMERLIN LAKEMAN

NO.	DATE	REVISION	BY	APVD

DSGN M LAKEMAN | DR L MATULA | CHK M STICKLEY | APVD M LAKEMAN

SEWER

PAUL B. KREBS WATER TREATMENT PLANT
IMPROVEMENTS
ANNISTON WATER WORKS & SEWER BOARD
CITY OF ANNISTON, ALABAMA

REUSE OF DOCUMENTS: THIS DOCUMENT, AND THE IDEAS AND DESIGNS INCORPORATED HEREIN, AS AN INSTRUMENT OF PROFESSIONAL SERVICE, IS THE PROPERTY OF JACOBS AND IS NOT TO BE USED, IN WHOLE OR IN PART, FOR ANY OTHER PROJECT WITHOUT THE WRITTEN AUTHORIZATION OF JACOBS.

Jacobs

PROCESS MECHANICAL
STANDARD DETAILS

VERIFY SCALE
BAR IS ONE INCH ON ORIGINAL DRAWING.
0 1"

DATE	OCTOBER 2024
PROJ	D3698100
DWG	99-D-503
SHEET	96 of 145

BID DOCUMENTS

©JACOBS 2024. ALL RIGHTS RESERVED.

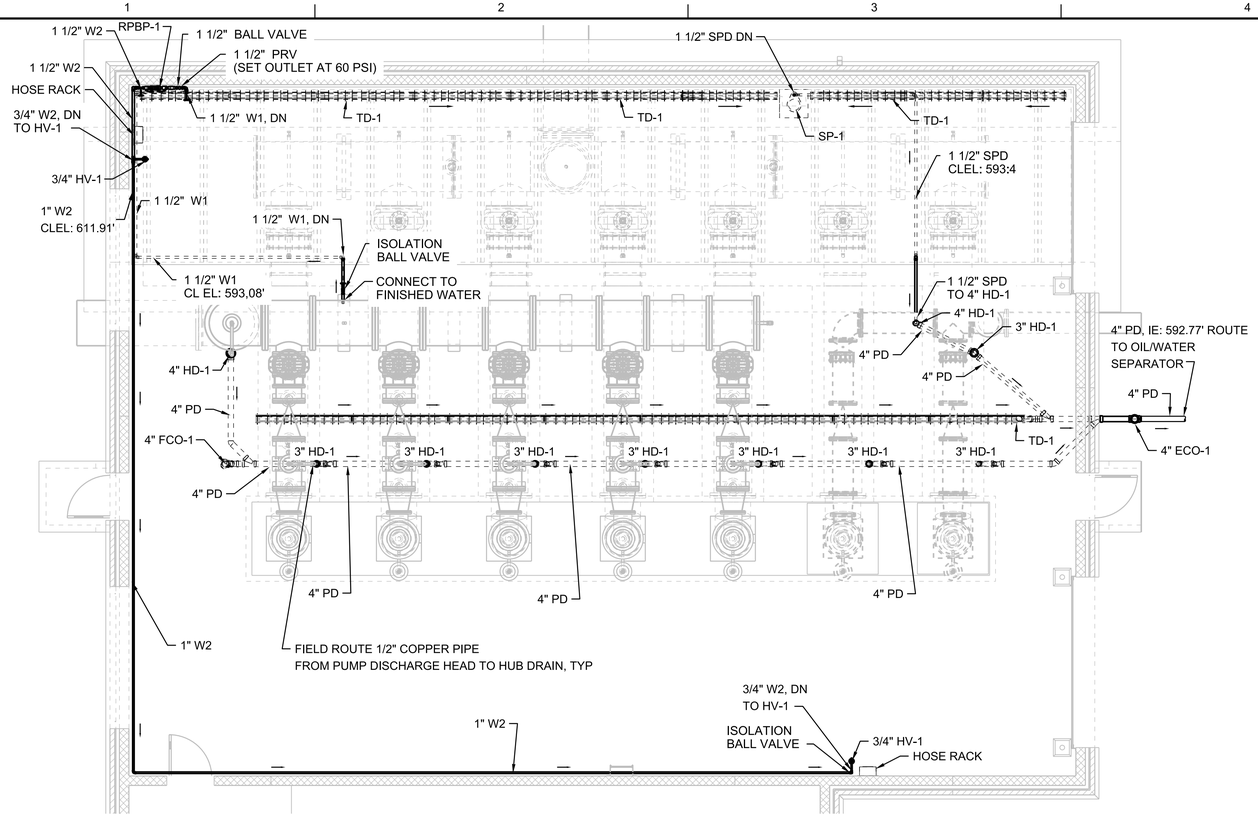

FLOOR PLAN

3/16"=1'-0"

GENERAL NOTES

1. SEE PLUMBING LEGEND FOR GENERAL NOTES, SYMBOLS, AND ABBREVIATIONS.
2. PROVIDE ISOLATION BALL VALVES FOR ALL NEW BRANCH TAKE OFFS.
3. SEE SPECIFIATION 40 27 00 FOR PIPING SCHEDULE.

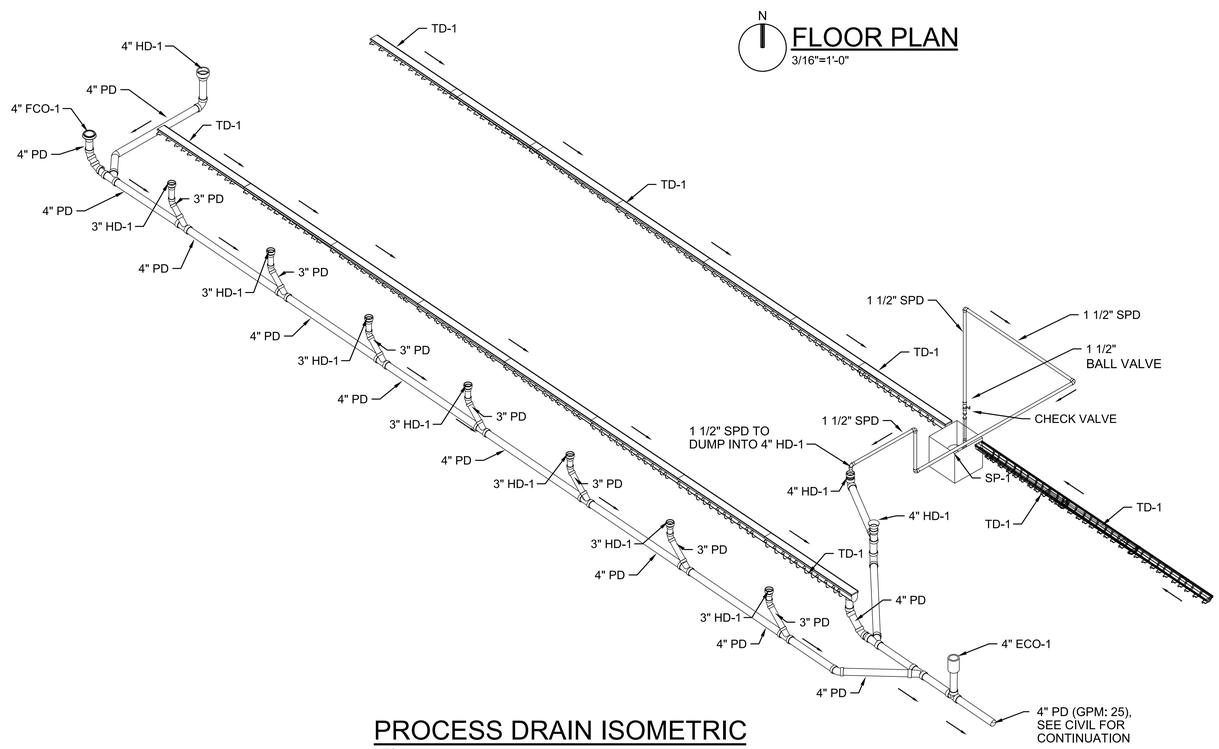

PROCESS DRAIN ISOMETRIC

NTS

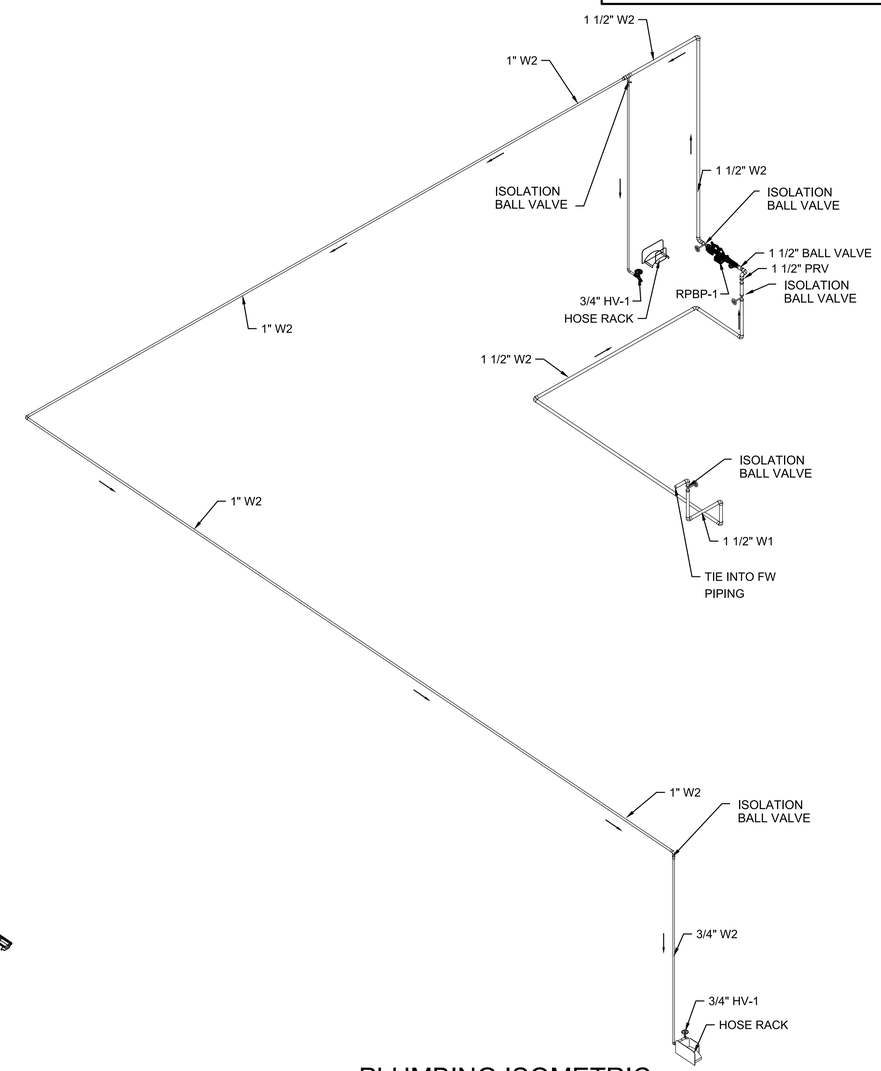

PLUMBING ISOMETRIC

NTS

ALABAMA LICENSED No. 32866 PROFESSIONAL ENGINEER ABEL VALIENTE

Date: 2024.10.24 13:48:34-0 4'00"

NO.	DATE	REVISION	BY	APVD

DSGN B RUSSAKIS | DR B SHANNON | CHK T PRICE | APVD A VALIENTE

PAUL B. KREBS WATER TREATMENT PLANT
IMPROVEMENTS
ANNISTON WATER WORKS & SEWER BOARD
CITY OF ANNISTON, ALABAMA

REUSE OF DOCUMENTS: THIS DOCUMENT, AND THE IDEAS AND DESIGNS INCORPORATED HEREIN, AS AN INSTRUMENT OF PROFESSIONAL SERVICE, IS THE PROPERTY OF JACOBS AND IS NOT TO BE USED, IN WHOLE OR IN PART, FOR ANY OTHER PROJECT WITHOUT THE WRITTEN AUTHORIZATION OF JACOBS.

Jacobs

PLUMBING

FINISHED WATER PUMP STATION
FLOOR PLAN

VERIFY SCALE
BAR IS ONE INCH ON ORIGINAL DRAWING.
0 1"

DATE	OCTOBER 2024
PROJ	D3698100
DWG	35-P-201
SHEET	97 of 145

BID DOCUMENTS

©JACOBS 2024. ALL RIGHTS RESERVED.

PLUMBING FIXTURE CONNECTION SCHEDULE

TAG NO.	DESCRIPTION	WASTE (IN.) MIN.	VENT (IN.) MIN.	TRAP (IN.) MIN.	W1 (IN.) MIN.	HW (IN.) MIN.	NOTES
ECO-1	CLEANOUT, EXTERIOR	4	N/A	N/A	N/A	N/A	1
FCO-1	FLOOR CLEANOUT, INTERIOR	VARIES	N/A	N/A	N/A	N/A	1
HD-1	HUB DRAIN	VARIES	VARIES	VARIES	N/A	N/A	1
TD-1	TRENCH DRAIN	VARIES	VARIES	VARIES	N/A	N/A	1
HV-1	HOSE VALVE	N/A	N/A	N/A	3/4	N/A	1

NOTES:
1. SEE 22 40 00 FOR PLUMBING FIXTURE SPECIFICATIONS.

THERMOSTATIC MIXING VALVE SCHEDULE

TAG NO.	LOCATION	SYSTEM	HOT WATER		COLD WATER		TEMPERED WATER		MIN. FLOW (GPM)	MAX ΔP (PSI)	MANUFACTURER; MODELS	NOTES
			TEMP °F	GPM	TEMP °F	GPM	TEMP °F	GPM				
TMV-1	PUMP STATION BUILDING	TW	140	6.1	65	16.9	85	23	3	5	LEONARD; 800-LF	1,2

NOTES:
1. INSTALL PER MANUFACTURERS WRITTEN INSTRUCTIONS.
2. PROVIDE VALVE WITH THE FOLLOWING FEATURES: ASSE 1071 CERTIFIED.

EMERGENCY SHOWER / EYEWASH SCHEDULE

GENERAL DATA				PHYSICAL DATA				MISCELLANEOUS		
TAG NO.	FACILITY	TYPE	DESCRIPTION	OVERALL HEIGHT (IN)	OVERALL LENGTH (IN)	OVERALL WIDTH (IN)	WEIGHT (LBS)	MANUFACTURER	MODEL	NOTES
SSH-1	FLOURIDE TANK FILLING STATION	COMBINATION SHOWER/EYEWASH	FREE STANDING (OUTDOOR)	89 1/4	25	12	-	HUGHES	J5GS45G	1,2

NOTES:
1. PROVIDE FREEZE PROTECTION VALVE.
2. STAINLESS STEEL PIPEWORK AND FITTINGS.

SUMP PUMP SCHEDULE

TAG NO.	LOCATION	TYPE	DISCHARGE PIPE SIZE (IN)	GPM	HEAD (FT)	RPM	MOTOR				BASIS OF DESIGN	NOTES
							HP	VOLTS	PH	HZ		
SP-1	SUMP	SIMPLEX	1 1/2	25	10	3450	0.25	115	1	60.0	GRUNDFOS, UNILIFT KP 150	1,2

NOTES:
1. PROVIDE SIMPLE FLOAT SWITCH FOR CONTROL.
2. 304 STAINLESS STEEL CONSTRUCTION.

SANITARY DRAINAGE OIL/ WATER SEPARATOR SCHEDULE

TAG NO..	SERVICE	LOCATION	INLET/OUTLET SIZE (INCHES)	VENT SIZE (INCHES)	FLOW RATE (GPM)	TOTAL VOLUME (GAL)	OIL PUMP OUT (GAL)	MANUFACTURER	MODEL	DIA X DEPTH	NOTES
OWS-1	DRAW OFF TYPE	OUTSIDE FW PS	4	2	50	540	30	OWS TECHNOLOGIES	RF-F-50	5' 6" X 5' 6"	1

NOTES:
1. PROVIDE HEAVY DUTY TRAFFIC COVER.
2. INSTALL PER MANUFACTURERS LITERATURE AND RECOMMENDATIONS.

EXPANSION TANK SCHEDULE

TAG NO.	LOCATION	TANK VOLUME (GAL)	MAX. ACCEPTANCE VOLUME (GAL)	PRECHARGE PRESSURE (PSIG)	MAX PRESSURE (PSIG)	MIN PRESSURE (PSIG)	DESIGN PRESSURE (PSIG)	SIZE (DIA X HEIGHT)	TANK WEIGHT (LBS)	MANUFACTURER; MODEL	NOTES
ET-1	EXISTING JANITOR ROOM	6.4	3.2	55	300	55	55	12" x 14"	50	AMTROL; ST-12C	1

NOTES:
1. ANCHOR TANK IN ACCORDANCE WITH MANUFACTURER'S INSTRUCTIONS.

BACKFLOW PREVENTER SCHEDULE

GENERAL DATA					PHYSICAL DATA				PERFORMANCE DATA		
TAG NO.	LOCATION	VALVE TYPE	SERVICE	SIZE (INCHES)	OVERALL HEIGHT (IN)	OVERALL LENGTH (IN)	OVERALL WIDTH (IN)	WEIGHT (LBS)	MAXIMUM FLOW (GPM)	MAXIMUM PRESSURE DROP (PSI)	MANUFACTURER; MODEL
RPBP-1	PUMP STATION BUILDING	REDUCED PRESSURE ZONE ASSEMBLY	W1	1 1/2	11 5/8	19 1/2	5 1/4	40	77	11	WATTS; LF909

NOTES
1. INSTALL PER MANUFACTURER'S LITERATURE AND RECOMMENDATIONS.
2. PROVIDE STRAINER UPSTREAM OF VALVE.

TANK TYPE ELECTRIC WATER HEATER SCHEDULE

GENERAL DATA					WATER DATA				ELECTRICAL DATA			PHYSICAL DIMENSIONS			MISCELLANEOUS DATA	
TAG NO.	FACILITY	LOCATION	SYSTEM SERVED	HEATING TYPE	TANK CAPACITY (GAL)	RECOVERY MIN/MAX (GPH)	INLET TEMP (°F)	OUTLET TEMP (°F)	HEATING ELEMENT (KW)	MAX AMPS	V/PH/HZ	OVERALL HEIGHT (IN)	OVERALL DIAMETER (IN)	OPERATING WEIGHT (LBS)	MANUFACTURER	MODEL NO.
EWH-1	PUMP STATION BUILDLING	MECH ROOM	DOMESTIC HOT WATER	ELECTRIC	119	125	65	140	24	30	480/3/60	62 1/4	29 1/2	390	AO SMITH	DRE-120

NOTE:
1. INSTALL PER MANUFACTURER'S LITERATURE AND RECOMMENDATIONS.

ALABAMA LICENSED No. 32866 PROFESSIONAL ENGINEER ABEL VALIENTE

Date: 2024.10.24 13:49:56-0 4'00"

NO.	DATE	REVISION	BY	APVD

DSGN B RUSSAKIS | DR J LOPEZ | CHK T PRICE | APVD A VALIENTE

PAUL B. KREBS WATER TREATMENT PLANT IMPROVEMENTS
ANNISTON WATER WORKS & SEWER BOARD
CITY OF ANNISTON, ALABAMA

REUSE OF DOCUMENTS: THIS DOCUMENT, AND THE IDEAS AND DESIGNS INCORPORATED HEREIN, AS AN INSTRUMENT OF PROFESSIONAL SERVICE, IS THE PROPERTY OF JACOBS AND IS NOT TO BE USED, IN WHOLE OR IN PART, FOR ANY OTHER PROJECT WITHOUT THE WRITTEN AUTHORIZATION OF JACOBS.

Jacobs

PLUMBING
FINISHED WATER PUMP STATION SCHEDULES

VERIFY SCALE
BAR IS ONE INCH ON ORIGINAL DRAWING.
0 1"

DATE	OCTOBER 2024
PROJ	D3698100
DWG	35-P-601
SHEET	98 of 145

BID DOCUMENTS

©JACOBS 2024. ALL RIGHTS RESERVED.

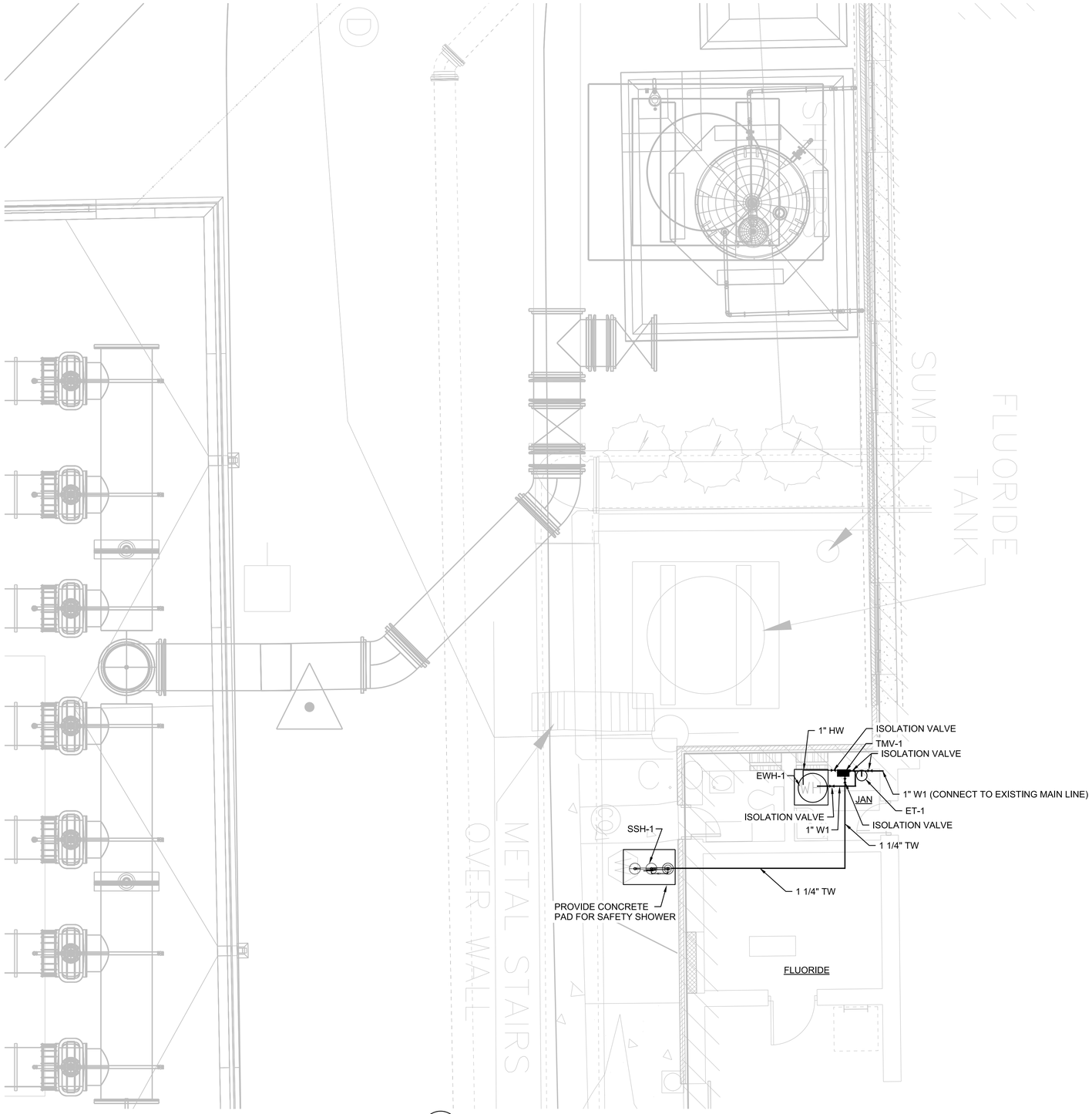

FLOOR PLAN

1/4"=1'-0"

GENERAL NOTES

1. SEE PLUMBING LEGEND FOR GENERAL NOTES, SYMBOLS, AND ABBREVIATIONS.
2. REPLACE EXISTING 50 GALLON HOT WATER HEATER WITH NEW 120 GALLON HOT WATER HEATER.
3. PROVIDE NEW EQUIPMENT PAD IF EXISTING PAD IS NOT LARGE ENOUGH. PROVIDE ADEQUATELY SIZED DRIP PAN FOR NEW WATER HEATER.
4. CONTRACTOR TO INSPECT EXISTING PIPING FOR CORROSION IN JANITOR ROOM AND INFORM ENGINEER AND CLIENT IF PIPING SHOULD BE REPLACED.

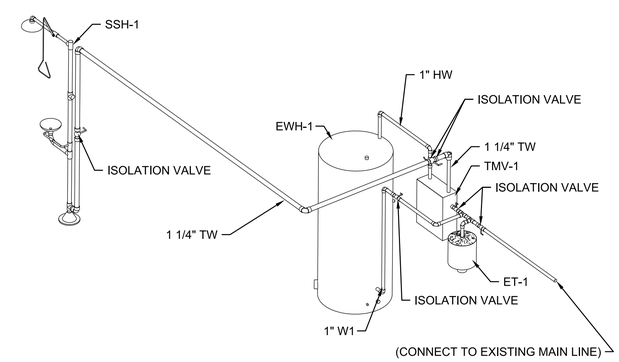

PLUMBING ISOMETRIC

NTS

ALABAMA LICENSED No. 32866 PROFESSIONAL ENGINEER ABEL VALIENTE

Date: 2024.10.24 13:49:19-04'00'

NO.	DATE	REVISION	BY	APVD

DSGN B RUSSAKIS | DR J LOPEZ | CHK T PRICE | APVD A VALIENTE

PAUL B. KREBS WATER TREATMENT PLANT
IMPROVEMENTS
ANNISTON WATER WORKS & SEWER BOARD
CITY OF ANNISTON, ALABAMA

REUSE OF DOCUMENTS: THIS DOCUMENT, AND THE IDEAS AND DESIGNS INCORPORATED HEREIN, AS AN INSTRUMENT OF PROFESSIONAL SERVICE, IS THE PROPERTY OF JACOBS AND IS NOT TO BE USED, IN WHOLE OR IN PART, FOR ANY OTHER PROJECT WITHOUT THE WRITTEN AUTHORIZATION OF JACOBS.

Jacobs

PLUMBING
FLUORIDE TANK PLAN

VERIFY SCALE
BAR IS ONE INCH ON ORIGINAL DRAWING.
0 1"

DATE	OCTOBER 2024
PROJ	D3698100
DWG	40-P-201
SHEET	99 of 145

BID DOCUMENTS

©JACOBS 2024. ALL RIGHTS RESERVED.

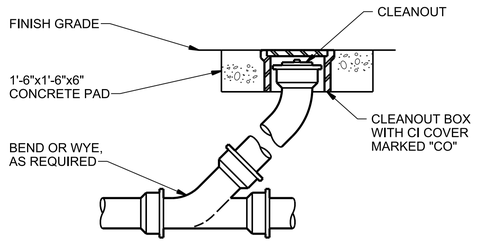

EXTERIOR CLEANOUT
NTS

2213-180

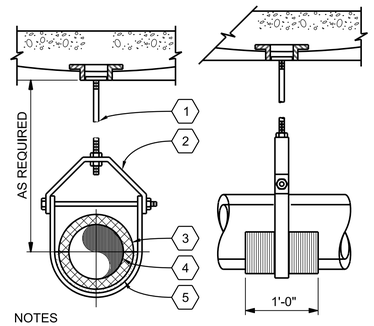

1. ROD SIZED FOR LOAD AND SPACING
2. CLEVIS PIPE HANGER
3. PIPE INSULATION AS SPECIFIED
4. PIPE SIZES 1/2"-10"
5. PROTECTIVE INSULATION SHIELD

NOTES

A. PIPE HANGERS SHALL BE OVERSIZED AS REQUIRED TO ACCOMMODATE THICKNESS OF INSULATION SPECIFIED. HANGER SHALL NOT COME INTO CONTACT WITH THE INSULATION DIRECTLY, EITHER AT THE VERTICAL YOKE OR AT THE POINT OF SUPPORT. FOR REQUIREMENTS ON INSULATION SHIELD USED WITH PIPE HANGERS, SEE SPECIFICATIONS.

INSULATED PIPE HANGER
NTS

2210-450

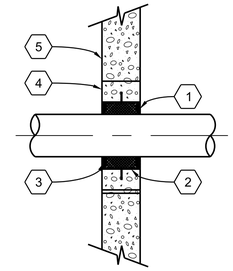

1. SEAL WATER TIGHT ALL AROUND WITH WATERPROOF NON SHRINKING MASTIC
2. PIPE SLEEVE
3. FIRE SAFING
4. CONCRETE FILL IN CMU WALL
5. CONCRETE OR CMU WALL

PIPE PENETRATION THRU WALL (TYP)
NTS

2210-101

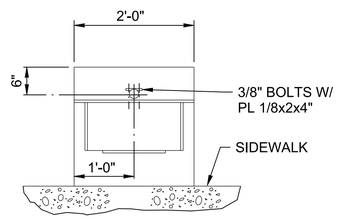

PLAN-POST MOUNT

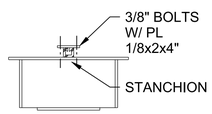

STANCHION MOUNTED

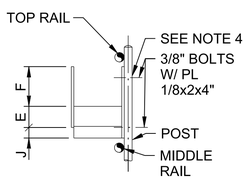

HANDRAIL POST MOUNTED

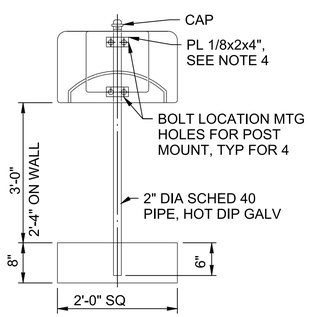

SECTION

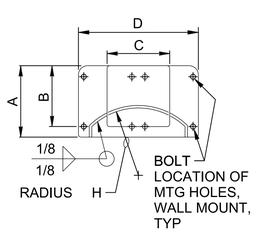

WALL MOUNTED

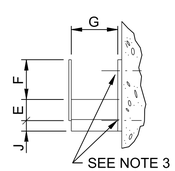

HOSE RACKS
NTS

DIMENSION IN INCHES

RACK TYPE	A	B	C	D	E	F	G	H	J
TYPE A-3/4" & 1" HOSE	10-1/2	9	9	18	3	6	7-1/2	9-3/4	1-1/2
TYPE B-1 1/2" HOSE	14	12	12	24	4	8	10	13	2

NOTES:

1. INTERIOR UNITS SHALL BE FABRICATED FROM 1/8" A-36 STEEL PLATE AND ENTIRE UNIT SHALL BE HOT DIP GALVANIZED AFTER FABRICATION.
2. EXTERIOR UNITS SHALL BE FABRICATED FROM 3/16" 6061-T6 ALUMINUM ALLOY PLATE.
3. ATTACH TO CONCRETE WALL WITH (4) - 3/8" STAINLESS STEEL STUD TYPE WEDGE ANCHORS.
4. ATTACH TO VERTICAL HANDRAIL OR INDIVIDUAL POST WITH PLATES AND (4)- 3/8" STAINLESS STEEL BOLTS.
5. ATTACH TO STEEL COLUMN WITH (4)- 3/8" ROUND HEAD BOLTS, ONE IN EACH CORNER. INSERT DOUBLE SPACER NUTS BETWEEN COLUMN AND HOSE RACK.

2210-720

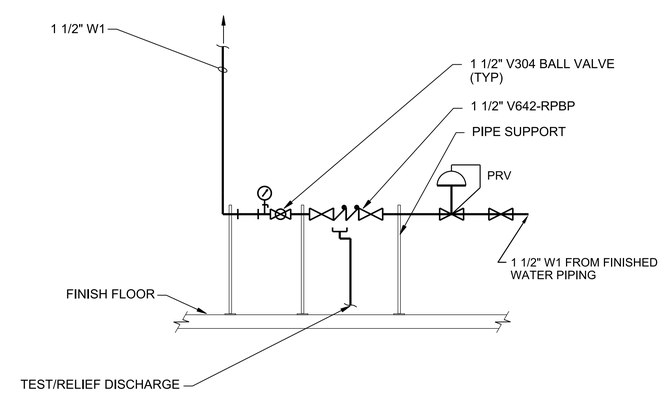

WATER SUPPLY HEADER
NTS

2211-101

ALABAMA LICENSED No. 32866 PROFESSIONAL ENGINEER ABEL VALIENTE

Date: 2024.10.24 13:49:40-04'00'

NO.	DATE	REVISION	BY	APVD

DSGN B RUSSAKIS | DR J LOPEZ | CHK T PRICE | APVD A VALIENTE

PAUL B. KREBS WATER TREATMENT PLANT
IMPROVEMENTS
ANNISTON WATER WORKS & SEWER BOARD
CITY OF ANNISTON, ALABAMA

REUSE OF DOCUMENTS: THIS DOCUMENT, AND THE IDEAS AND DESIGNS INCORPORATED HEREIN, AS AN INSTRUMENT OF PROFESSIONAL SERVICE, IS THE PROPERTY OF JACOBS AND IS NOT TO BE USED, IN WHOLE OR IN PART, FOR ANY OTHER PROJECT WITHOUT THE WRITTEN AUTHORIZATION OF JACOBS.

Jacobs

PLUMBING
DETAILS

VERIFY SCALE
BAR IS ONE INCH ON ORIGINAL DRAWING.
0 1"

DATE	OCTOBER 2024
PROJ	D3698100
DWG	99-P-501
SHEET	100 of 145

BID DOCUMENTS

©JACOBS 2024. ALL RIGHTS RESERVED.

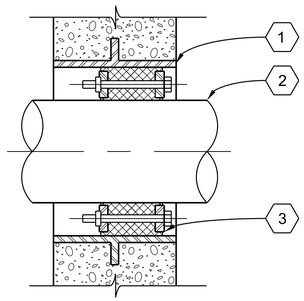

1. PIPE SLEEVE
2. PASSING PIPE
3. MODULAR MECHANICAL SEAL ASSEMBLY WITH SST BOLTS AND NUTS, AS SPECIFIED

WALL PIPE PENETRATION SEAL
NTS

2210-103

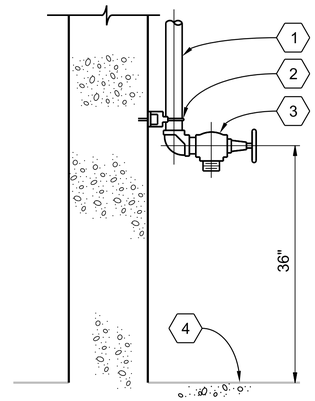

1. WATER SUPPLY LINE.
2. PIPE SUPPORT.
3. HV-1 HOSE VALVE. (SEE NOTE B)
4. FINISH FLOOR.

NOTES

A. ROTATE HOSE VALVE 30° OFF WALL.

B. FOR HOSE VALVE SIZE SEE PLANS

INTERIOR HOSE VALVE
NTS

2210-300

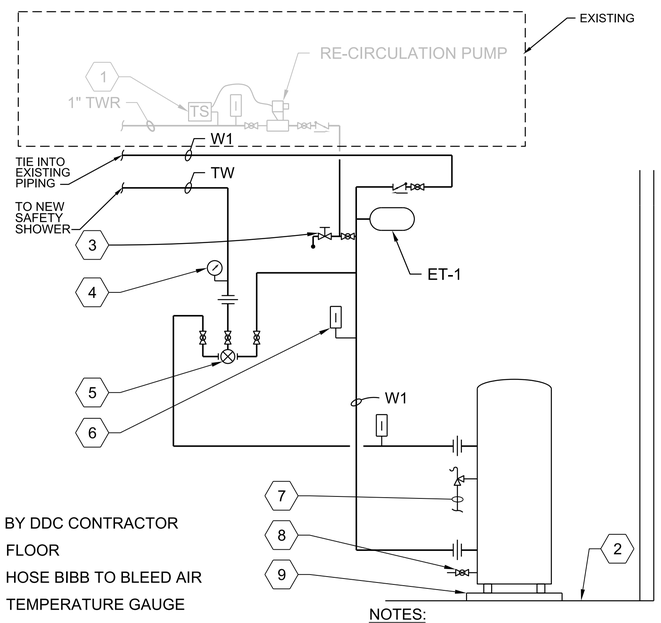

1. BY DDC CONTRACTOR
2. FLOOR
3. HOSE BIBB TO BLEED AIR
4. TEMPERATURE GAUGE
5. TMV-1, INSTALL PER MANUFACTURER'S RECOMMENDATIONS.
6. THERMOMETER.
7. PIPE PTRV TO HUB DRAIN
8. DRAIN VALVE
9. HOUSEKEEPING PAD

NOTES:
REPLACE WATER HEATER AND RECONNECT EXISTING HOT AND COLD WATER PIPING TO UNIT TO SERVE EXISTING BUILDING AND THE NEW SAFETY SHOWER.

WATER HEATER
NTS

2233-160

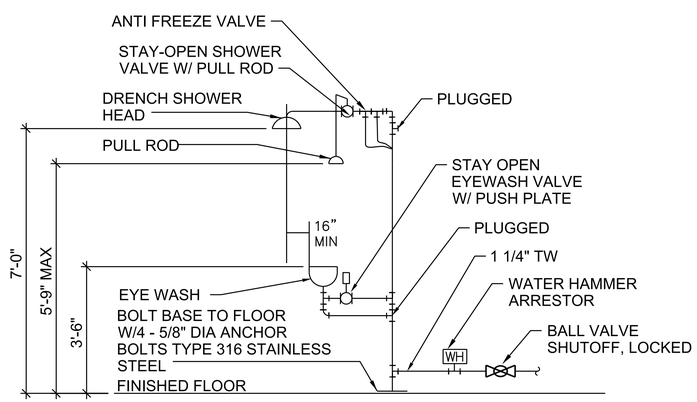

EMERGENCY EYEWASH AND SHOWER
NTS

2240-301

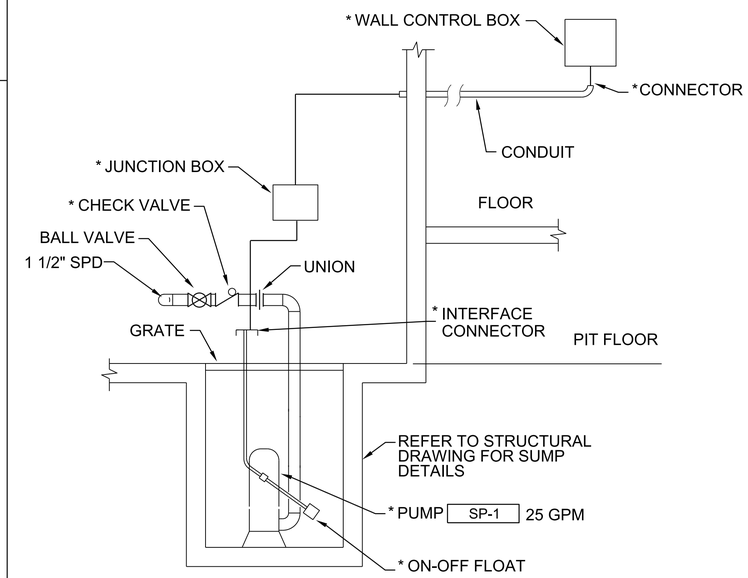

NOTES:

1. THIS DETAIL SHOWS GENERAL PIPING ARRANGEMENT. FOR SPECIFIC ORIENTATION OF PIPES AND VALVES, SEE PLANS.

SUMP PUMP
NTS

2213-170

ALABAMA LICENSED No. 32866 PROFESSIONAL ENGINEER ABEL VALIENTE

Date: 2024-10-24 13:50:06-04'00'

NO.	DATE	REVISION	BY	APVD

DSGN B RUSSAKIS | DR J LOPEZ | CHK T PRICE | APVD A VALIENTE

PAUL B. KREBS WATER TREATMENT PLANT IMPROVEMENTS
ANNISTON WATER WORKS & SEWER BOARD
CITY OF ANNISTON, ALABAMA

Jacobs

PLUMBING DETAILS

REUSE OF DOCUMENTS: THIS DOCUMENT, AND THE IDEAS AND DESIGNS INCORPORATED HEREIN, AS AN INSTRUMENT OF PROFESSIONAL SERVICE, IS THE PROPERTY OF JACOBS AND IS NOT TO BE USED, IN WHOLE OR IN PART, FOR ANY OTHER PROJECT WITHOUT THE WRITTEN AUTHORIZATION OF JACOBS.

VERIFY SCALE
BAR IS ONE INCH ON ORIGINAL DRAWING.
0 1"

DATE	OCTOBER 2024
PROJ	D3698100
DWG	99-P-502
SHEET	101 of 145

BID DOCUMENTS

©JACOBS 2024. ALL RIGHTS RESERVED.

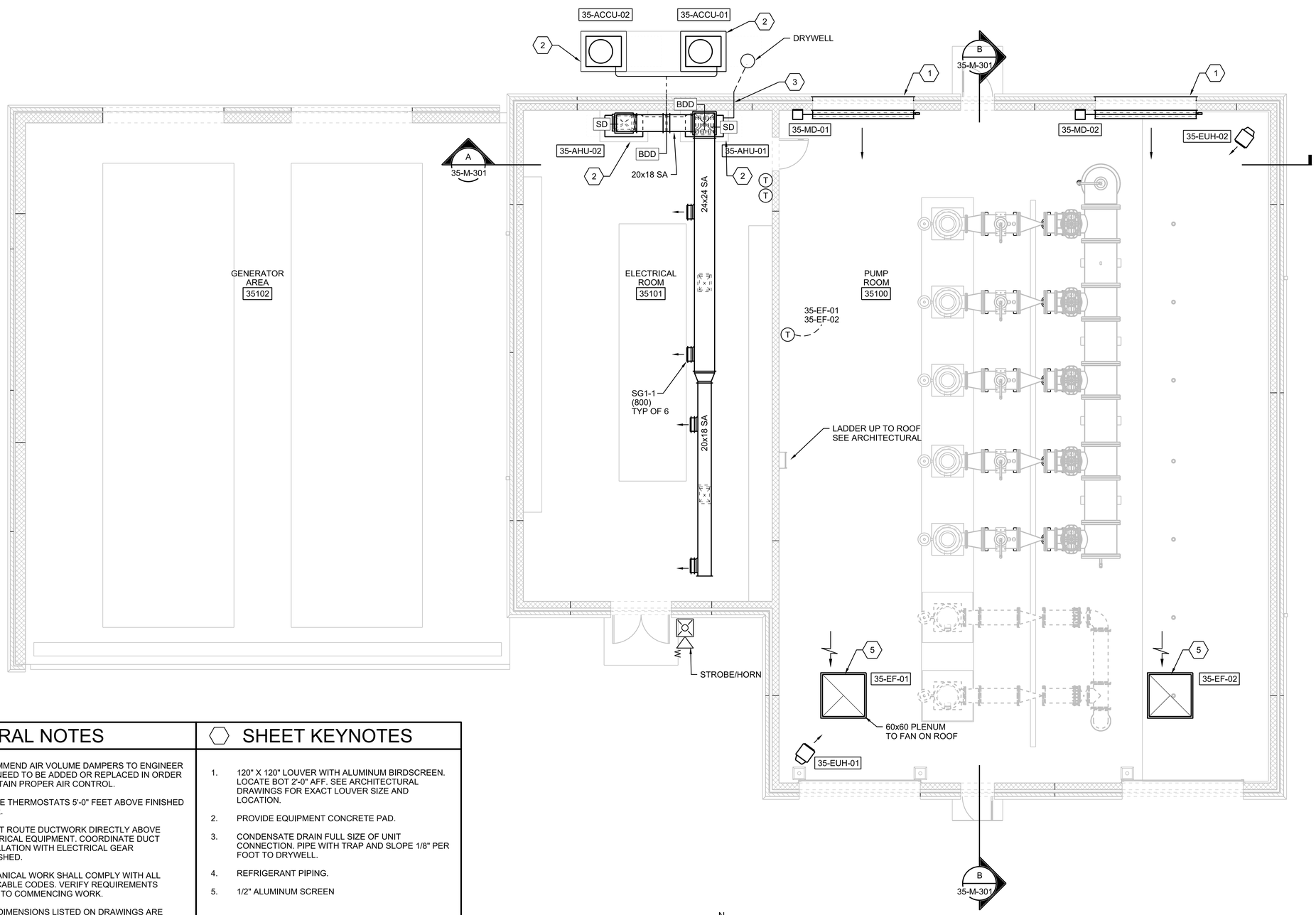

GENERAL NOTES

1. RECOMMEND AIR VOLUME DAMPERS TO ENGINEER THAT NEED TO BE ADDED OR REPLACED IN ORDER TO OBTAIN PROPER AIR CONTROL.
2. LOCATE THERMOSTATS 5'-0" FEET ABOVE FINISHED FLOOR.
3. DO NOT ROUTE DUCTWORK DIRECTLY ABOVE ELECTRICAL EQUIPMENT. COORDINATE DUCT INSTALLATION WITH ELECTRICAL GEAR FURNISHED.
4. MECHANICAL WORK SHALL COMPLY WITH ALL APPLICABLE CODES. VERIFY REQUIREMENTS PRIOR TO COMMENCING WORK.
5. DUCT DIMENSIONS LISTED ON DRAWINGS ARE CLEAR INSIDE DIMENSIONS.
6. DUCT SUPPORT SHALL BE PROVIDED BY CONTRACTOR ACCORDING TO APPLICABLE CODES.

SHEET KEYNOTES

1. 120" X 120" LOUVER WITH ALUMINUM BIRDSCREEN. LOCATE BOT 2'-0" AFF. SEE ARCHITECTURAL DRAWINGS FOR EXACT LOUVER SIZE AND LOCATION.
2. PROVIDE EQUIPMENT CONCRETE PAD.
3. CONDENSATE DRAIN FULL SIZE OF UNIT CONNECTION. PIPE WITH TRAP AND SLOPE 1/8" PER FOOT TO DRYWELL.
4. REFRIGERANT PIPING.
5. 1/2" ALUMINUM SCREEN

N

FLOOR PLAN

3/16"=1'-0"

ALABAMA LICENSED No. 32866 PROFESSIONAL ENGINEER ABEL VALIENTE

Date: 2024.10.2 Abel Valiente 13:47:24-0 4'00"

NO.	DATE	DR	CHK	APVD	BY	APVD
DSGN	A VALIENTE	Y FITZGERALD	T PRICE	A VALIENTE		

REVISION

REUSE OF DOCUMENTS: THIS DOCUMENT, AND THE IDEAS AND DESIGNS INCORPORATED HEREIN, AS AN INSTRUMENT OF PROFESSIONAL SERVICE, IS THE PROPERTY OF JACOBS AND IS NOT TO BE USED, IN WHOLE OR IN PART, FOR ANY OTHER PROJECT WITHOUT THE WRITTEN AUTHORIZATION OF JACOBS.

PAUL B. KREBS WATER TREATMENT PLANT
IMPROVEMENTS
ANNISTON WATER WORKS & SEWER BOARD
CITY OF ANNISTON, ALABAMA

Jacobs

BUILDING MECHANICAL

FINISHED WATER PUMP STATION
FLOOR PLAN

VERIFY SCALE
BAR IS ONE INCH ON ORIGINAL DRAWING.
0 1"

DATE	OCTOBER 2024
PROJ	D3698100
DWG	35-M-201
SHEET	102 of 145

BID DOCUMENTS

©JACOBS 2024. ALL RIGHTS RESERVED.

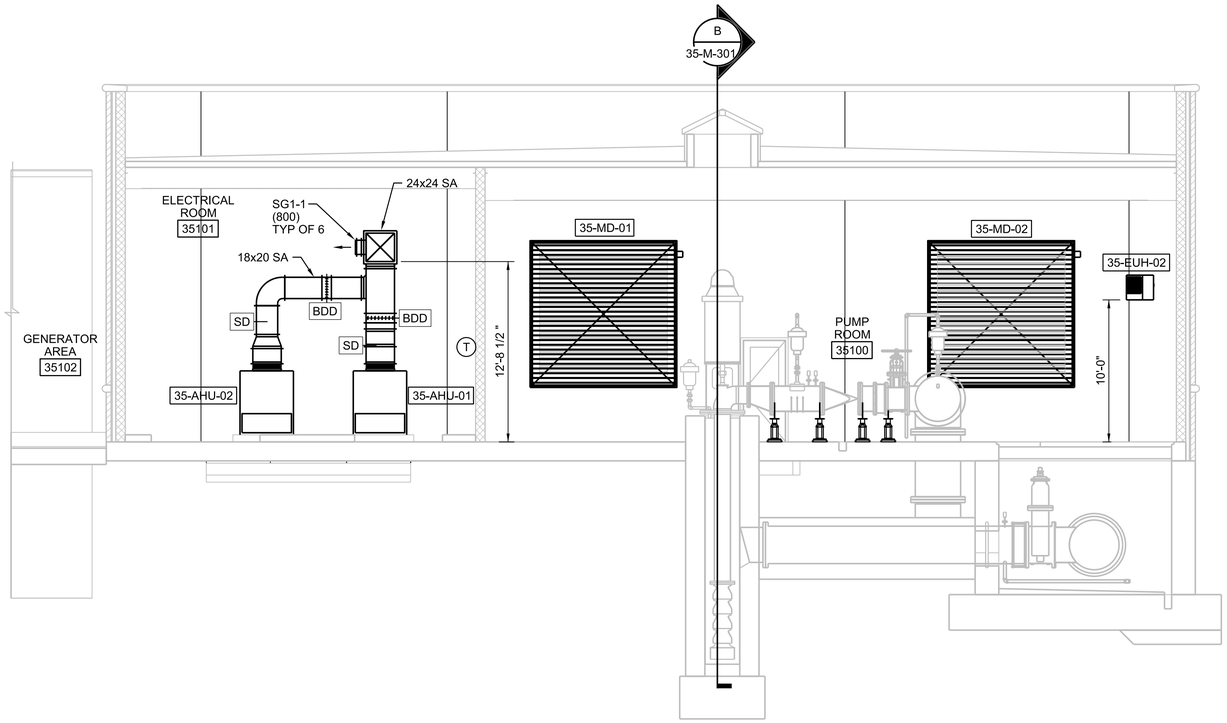

A SECTION
3/16"=1'-0"
35-M-201

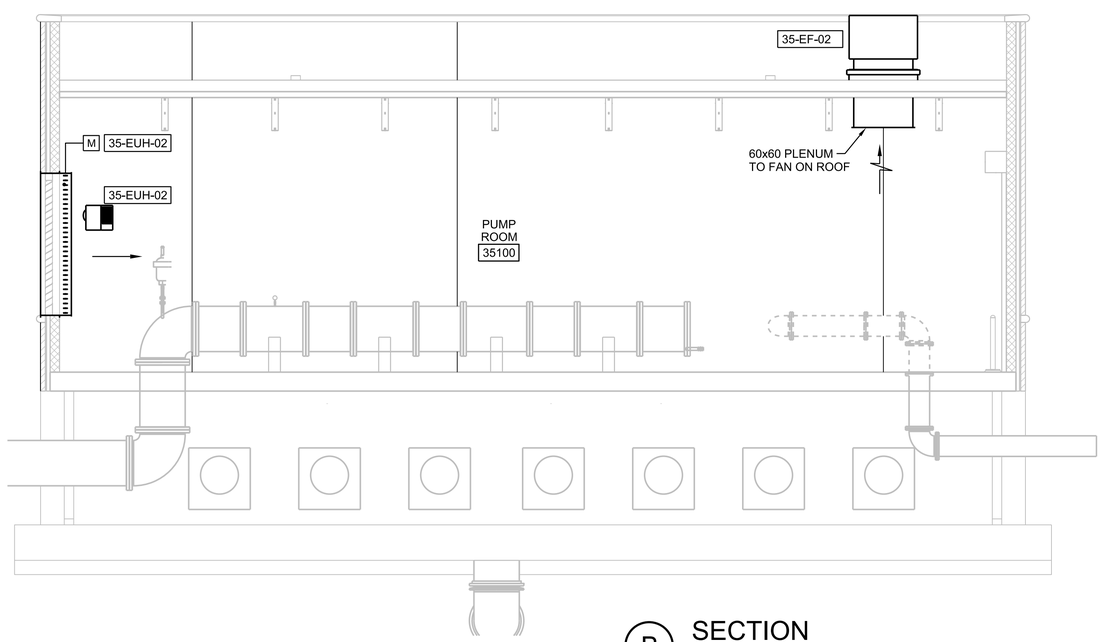

B SECTION
3/16"=1'-0"
35-M-201

SEQUENCES OF OPERATION

FINISHED WATER PUMP STATION BUILDING

- DX SPLIT AIR CONDITIONING 35-AHU/ACCU-01 & 02
- EXHAUST FANS 35-EF-01& 02
- ELECTRIC HEATER35-EUH-01& 02

GENERAL:
BOTH UNITS ARE SIZED APPROXIMATELY AT 75% OF THE SENSIBLE REQUIRED CAPACITY. THE SYSTEMS SHALL BE CONTROLLED VIA 7-DAY PROGRAMMABLE THERMOSTAT (ONE PER UNIT). SETPOINTS SHALL BE ADJUSTABLE BY THE USER AT THE THERMOSTAT AND SHALL BE PROGRAMMED SO LEAD AND LAG UNITS SETPOINTS ALTERNATE AS SHOWN BELOW TO EQUALIZE RUN TIME. THE EXHAUST FANS WILL BE CONTROLLED THERMOSTATICALLY AND VIA HAND/AUTO/OFF SWITCH STATIONS PROVIDED BY ELECTRICAL. THE ELECTRIC HEATERS WILL BE CONTROLLED VIA UNIT MOUNTED THERMOSTAT.

35-AHU/ACCU-1 & 2
SETPOINTS SCHEDULE:

UNIT	SCHEDULE	COOLING F(ADJ)	HEATING F(ADJ)
35-AHU-01	MON-THU(12:00 PM)	77	55
	THU(12:01 PM)-SUN	82	50
35-AHU-02	MON-THU(12:00 PM)	82	50
	THU(12:01 PM)-SUN	77	55

OPERATION
COOLING MODE :
UPON A RISE OF THE TEMPERATURE IN THE ELECTRICAL ROOM OVER THE FIRST TEMPERATURE SETPOINT 77 DEGREES F(ADJ), THE LEAD SYSTEM SUPPLY FAN SHALL START AND THE DX COOLING STAGES SHALL CYCLE TO MAINTAIN THE FIRST SPACE TEMPERATURE SETPOINT. UPON FURTHER RISE OF THE SPACE TEMPERATURE OVER THE SECOND TEMPERATURE SETPOINT 82 DEGREES F (ADJ),THE LAG SYSTEM SUPPLY FAN SHALL ENERGIZE AND THE DX COOLING SHALL CYCLE TO MAINTAIN THE SECOND TEMPERATURE SETPOINT. AS THE SPACE TEMPERATURE SETPOINTS ARE SATISFIED, THE SYSTEMS SUPPLY FANS SHALL STOP AND THE DX COOLING SHALL BE INHIBITED FROM OPERATING.

HEATING MODE:
UPON A DROP OF THE TEMPERATURE IN THE ELECTRICAL ROOM BELOW THE FIRST TEMPERATURE SETPOINT 55 DEGREES F(ADJ), THE LEAD SYSTEM SUPPLY FAN AND HEATING MODE SHALL ENERGIZE TO MAINTAIN THE FIRST SPACE TEMPERATURE SETPOINT. UPON FURTHER DROP OF THE SPACE TEMPERATURE BELOW THE SECOND TEMPERATURE SETPOINT 50 DEGREES F (ADJ), THE LAG SYSTEM SUPPLY FAN AND THE HEATING MODE SHALL ENERGIZE TO MAINTAIN THE SECOND TEMPERATURE SETPOINT. AS THE SPACE TEMPERATURE SETPOINTS ARE SATISFIED, THE SYSTEMS SUPPLY FANS AND HEATING MODE SHALL BE DE-ENERGIZED.

SMOKE DETECTION SHUTDOWN
ON A DETECTION OF PRODUCTS OF COMBUSTION BY THE DUCT MOUNTED SMOKE DETECTOR, THE SUPPLY FANS SHALL STOP. THE PLC SHALL RECEIVE THE IMPUT FOR ALARMING ON THE SCADA SYSTEMS. THE SIGNAL WILL BE HARDWIRED TO RELAY LOGIC IN THE PLC PANEL TO ACTIVATE THE COMBINATION HORN/STROBE. WHEN THE SILENCE PUSH BUTTON IS PRESSED, THE HORN/STROBE WILL BE DISABLED UNTIL A NEW ALARM IS RECEIVED.

35-EF-01 & 02
OPERATION
- AUTO: UPON A RISE OF THE SPACE TEMPERATURE ABOVE THE TEMPERATURE SETPOINT 85 DEGREES F(ADJ) MOTORIZED DAMPERS 35-MD-01 & 02 SHALL OPEN. THE EXHAUST FANS SHALL ENERGIZE AND RUN CONTINUOUSLY AFTER CONFIRMATION THAT THE ASSOCIATED DAMPERS ARE OPEN. AS THE TEMPERATURE SETPOINT IS SATISFIED, THE EXHAUST FANS SHALL DE-ENERGIZE AND ONLY THEN, THE ASSOCIATED DAMPERS SHALL CLOSE.
- HAND: MOTORIZED DAMPERS 35-MD-01 & 02 SHALL OPEN. THE EXHAUST FANS SHALL ENERGIZE AND RUN CONTINUOUSLY AFTER CONFIRMATION THAT THE ASSOCIATED DAMPERS ARE OPEN.
- OFF: THE FANS SHALL REMAIN DE-ENERGIZED AND ASSOCIATED DAMPERS CLOSED.

35-EUH-01 & 02
OPERATION
UPON A DROP OF THE SPACE TEMPERATURE BELOW SETPOINT 55 DEGREES F(ADJ), THE UNIT HEATER'S FAN SHALL ENERGIZE. AS THE SPACE TEMPERATURE SETPOINT IS SATISFIED THE UNIT FAN SHALL DE-ENERGIZE.

ALABAMA LICENSED No. 32866 PROFESSIONAL ENGINEER ABEL VALIENTE
Date: 2024.10.24 13:47:48-0 4'00"

NO.	DATE	REVISION	BY	APVD

DSGN A VALIENTE | DR Y FITZGERALD | CHK T PRICE | APVD A VALIENTE

PAUL B. KREBS WATER TREATMENT PLANT
IMPROVEMENTS
ANNISTON WATER WORKS & SEWER BOARD
CITY OF ANNISTON, ALABAMA

Jacobs

BUILDING MECHANICAL
FINISHED WATER PUMP STATION
SECTIONS

REUSE OF DOCUMENTS: THIS DOCUMENT, AND THE IDEAS AND DESIGNS INCORPORATED HEREIN, AS AN INSTRUMENT OF PROFESSIONAL SERVICE, IS THE PROPERTY OF JACOBS AND IS NOT TO BE USED, IN WHOLE OR IN PART, FOR ANY OTHER PROJECT WITHOUT THE WRITTEN AUTHORIZATION OF JACOBS.

VERIFY SCALE
BAR IS ONE INCH ON ORIGINAL DRAWING,
0 1"

DATE	OCTOBER 2024
PROJ	D3698100
DWG	35-M-301
SHEET	103 of 145

BID DOCUMENTS

©JACOBS 2024. ALL RIGHTS RESERVED.

FANS 23 34 00

SYMBOL				35-EF-01 & 02
LOCATION				PUMP ROOM
TYPE				ROOF UPBLAST
FAN DATA	AIRFLOW	MAX	CFM	24,800
		@ SP	IN W.G.	0.35
		MIN	CFM	0
	SPEED		RPM	857
	DRIVE TYPE			DIRECT
	WHEEL		TYPE	PROP
		MIN. DIA.	INCH	47.79
	MAXIMUM		BHP	4.71
SOUND DATA	SOUND POWER LEVEL dB (RE 10^{-12} W) @ MID OCTAVE BAND FREQUENCY (Hz)		63	97
			125	95
			250	95
			500	92
			1K	88
			2K	83
			4K	78
			8K	73
ELECTRICAL DATA	MOTOR		HP	5
			RPM	900
			ENCL.	TEFC
	VOLT			460
	PH			3
MAXIMUM DIMENSIONS	LENGTH		INCHES	57 3/4
	WIDTH		INCHES	57 3/4
	HEIGHT		INCHES	50
	WEIGHT		LBS	581
MANUFACTURER				AEROVENT
MODEL NO.				D53 48B304
APPLICABLE REMARKS:				A THRU G

REMARKS:
- A: MOTOR STARTER PER DIVISION 26 ELECTRICAL
- B: DISCONNECT PER DIVISION 26 ELECTRICAL
- C: ALL ALUMINUM CONSTRUCTION
- D: ALUMINUM STACK CAP
- E: CURB BASE
- F: 316 SST HARDWARE
- G: MOTORIZED SHUTTER PER MANUFACTURER

UNIT HEATERS

SYMBOL				35-EUH-01 & 02
LOCATION				PUMP STATION
TYPE				ELECTRIC, SUSPENDED
AIR SIDE DATA	SUPPLY AIRFLOW		CFM	830
	THROW		FEET	20
	MOTOR		RPM	1050
		POWER	HP	1/15
			VOLT	460
			PH	3
	EAT		DEG F	—
	LAT		DEG F	—
ELECTRIC HEAT DATA	CAPACITY		kW	12.5
	NUMBER OF STEPS			1
	VOLT			460
	PH			3
UNIT ELECTRICAL DATA	VOLT			460
	PH			3
MOUNTING HEIGHT	MINIMUM		FEET	10
MAXIMUM DIMENSIONS	LENGTH		INCHES	21 1/4
	WIDTH		INCHES	16 7/8
	HEIGHT		INCHES	20 7/8
	WEIGHT		LBS	65
MANUFACTURER				MODINE
MODEL NO.				HER 125
APPLICABLE REMARKS:				A,B,C,D,E

ABBREVIATIONS:
- NG: NATURAL GAS
- PG: PROPANE GAS
- NG/PG: DUAL FUEL, NATURAL AND PROPANE GAS

REMARKS:
- A: FACTORY INSTALLED MOTOR STARTER / HEATER CONTACTOR
- B: DISCONNECT: FACTORY INSTALLED
- C: WALL MOUNTING BRACKET
- D: HORIZONTAL AIRFLOW DISCHARGE
- E: UNIT MOUNTED THERMOSTAT

CONTROL DAMPERS 23 09 13

SYMBOL			35-MD-01 & 02
SERVES			INTAKE
CONSTRUCTION MATERIALS	AXLES		ALUM
	BLADE		ALUM
	FRAME		ALUM
	SEALS	JAMB	SILICONE
		BLADE	SILICONE
PERFORMANCE	MAX TEMP	DEG. F.	200
	MAX PRESSURE	IN W.G.	8
	MAX VELOCITY	FPM	270
	MAX LEAKAGE @ 1 IN W.G.	CFM/SF	3
NOMINAL DIMENSIONS	WIDTH	INCHES	120
	HEIGHT	INCHES	120
	DIAMETER	INCHES	—
ACTUATOR DATA	FAILS		OPEN
	RANGE		TWO POSITION
	TYPE		ELECTRIC
	VOLTS OR PRESS.		120
MANUFACTURER	DAMPER		GREENHECK
	ACTUATOR		BELIMO
MODEL NO.	DAMPER		ICD45
REMARKS			A,B,C,D

ABBREVIATIONS:
- FRP: FIBERGLASS REINFORCED PLASTIC
- ALUM: ALUMINUM
- 316 SST: STAINLESS STEEL, TYPE 316

APPLICABLE REMARKS:
- A: REFER TO SPECIFICATIONS FOR ADDITIONAL INFORMATION ON MATERIALS AND PERFORMANCE.
- B: FLANGED STYLE FRAME
- C: PARALLEL BLADE ACTION
- D: CONTRACTOR SHALL DETERMINE THE NUMBER OF DAMPERS / ACTUATORS REQUIRED TO MET THE SCHEDULED OVERALL DIMENSIONS ACCORDING WITH THE SELECTED MANUFACTURER RECOMMENDATIONS.

AIR OUTLETS AND INLETS 23 37 00

SYMBOL				SG1-1
TYPE				SUPPLY GRILLE
DIMENSIONAL DATA	FACE	W	INCH	18
		L	INCH	14
	NECK	W	INCH	16
		L	INCH	12
		DIA	INCH	—
AIR DISTRUBUTION PATTERN				TWO WAY
CONSTRUCTION	MATERIAL			ALUMINUM
	FINISH			ALUMINUM
PERFORMANCE	MAX NOISE		NC	34
	AIRFLOW	MIN	CFM	0
		MAX	CFM	800
	MAX THROW	@ 50 FPM	FT	23
	MAX TOTAL PRESSURE		IN WG	0.13
ACCESSORIES	DAMPER			YES
	PLENUM			NO
MANUFACTURER	MAKE			TITUS
	MODEL NO.			300FL
APPLICABLE REMARKS:				A,B,C

REMARKS:
- A: REFER TO SPECIFICATIONS FOR ADDITIONAL REQUIREMENTS
- B: 45 DEGREES THROW PATTERN
- C: 3/4" BLADE SPACING

DUCTWORK 23 31 13

SYSTEM	SERVICE	SECTION	SMACNA DUCT CONSTRUCTION CRITERIA: PRESSURE CLASS (IN W.G.)	MATERIALS OF CONSTRUCTION	SEAL CLASS	APPLICABLE REMARKS
35-AHU-01 & 02	SUPPLY AIR	AHU TO GRILLES	2	ALUMINUM	A	A,B,C,D

REMARKS:
- A: REFER SPECIFICATION SECTION 23 31 13, METAL DUCTS AND ACCESSORIES
- B: SUPPORTS BY MECHANICAL CONTRACTOR
- C: PROVIDE DUCT BRACING FOR REINFORCEMENT AS REQUIRED PER SMACNA
- D: INSULATED DUCTWORK

SPLIT SYSTEM DX OUTDOOR UNITS 23 81 00

TAG	LOCATION	DX COOLING DATA: CAPACITY BTU/HR.	AMBIENT TEMP. DEG. F	EER(IEER) @ ARI	DX HEATING DATA: CAPACITY BTU/HR.	COND. DEG. F	COP @ ARI	OUTDOOR FAN DATA: NO.	H.P. (EA)	VOLT	PH	CFM (TOTAL)	COMPRESSOR DATA: NO.	STEPS	RLA (EA.)	LRA (EA.)	VOLT.	PH.	UNIT ELECTRICAL DATA: # CONN	MCA	MOCP (FUSE)	VOLT	PH	UNIT DIMENSIONS (INCHES): L	W	H	MAX. WEIGHT LBS	MANUFACTURER	MODEL	APPLICABLE REMARKS
35-ACCU-01 & 02	OUTDOOR	76,476	90.2	12.7	37,500	17	2.25	1	1	460	3	6,530	2	1	5.8	38	460	3	1	14	20	460	3	52	40	39 1/16	356	TRANE	TWA072	A THRU I

REMARKS:
- A: FACTORY INSTALLED MOTOR CONTACTOR / STARTER
- B: CONDENSER HAIL GUARDS
- C: 5 YEAR COMPRESSOR WARRANTY FOR EACH COMPRESSOR
- D: DISCONNECT PER DIVISION 26 ELECTRICAL
- E: HOT GAS BYPASS ON LEAD COMPRESSOR
- F: LOW-AMBIENT COOLING KIT
- G:COMPRESSOR CYCLE DELAY
- H: PROVIDE FACTORY DIP APPLIED BRONZ-GLOW'S HUSKY COIL CORROSION PROTECTING COAT FOR COIL AND ALL ASSOCIATED PIPING.
- I: PROVIDE BRONZ-GLOW'S HUSKY COMPONENT COAT FOR ALL COMPONENTS INCLUDING VALVES FILTER DRIERS, COPPER TUBING, TUBING INSULATION AND ANY WELDED JOINT WHERE DIP COAT HAVE BEEN IMPACTED DUE TO FACTORY ASSEMMBLY AND FIELD WORK.

SPLIT SYSTEM DX INDOOR UNITS 23 81 00

TAG	LOCATION	FAN DATA: SUPPLY AIR CFM	OUTSIDE AIR CFM	EXTERNAL STATIC P IN W.G.	DX COOLING DATA: NET CAPACITY BTU/H	NET SENS. BTU/H	EAT DEG. F: DB	WB	AMBIENT TEMP. DEG. F	DX HEATING DATA: NET CAPACTY BTU/H	EAT DEG. F	AMBIENT TEMP. DEG. F	FAN MOTOR DATA: HP	VOLT	PH	UNIT ELECTRICAL DATA: #CONN.	MCA A	MOCP (FUSE)	VOLT	PH	UNIT DIMENSIONS (INCHES): L	W	H	MAX. WEIGHT LBS	MANUFACTURER	MODEL	APPLICABLE REMARKS
35-AHU-01 & 02	ELECTRICAL ROOM	2400	0	0.75	76,476	66,558	78	63.2	90.2	37,500	60	17	2	460	3	1	3	15	460	3	25 1/2	47 1/2	54 1/16	323	TRANE	TWE072	A THRU F

REMARKS:
- A: FACTORY INSTALLED MOTOR CONTACTOR / STARTER
- B: RETURN-AIR GRILLE
- C: DUAL REFRIGERATION CIRCUITS
- D: 7-DAY PROGRAMMABLE THERMOSTAT (ONE PER UNIT)
- E: DISCONNECT PER DIVISION 26 ELECTRICAL
- F: STAINLESS STEEL DRAIN PAN WITH OVERFLOW SWITCH

ALABAMA LICENSED No. 32866 PROFESSIONAL ENGINEER ABEL VALIENTE
Date: 2024.10.24 13:48:12-0 '400'

NO.	DATE	REVISION	BY	APVD

DSGN A VALIENTE | DR Y FITZGERALD | CHK T PRICE | APVD A VALIENTE

PAUL B. KREBS WATER TREATMENT PLANT IMPROVEMENTS
ANNISTON WATER WORKS & SEWER BOARD
CITY OF ANNISTON, ALABAMA

REUSE OF DOCUMENTS: THIS DOCUMENT, AND THE IDEAS AND DESIGNS INCORPORATED HEREIN, AS AN INSTRUMENT OF PROFESSIONAL SERVICE, IS THE PROPERTY OF JACOBS AND IS NOT TO BE USED, IN WHOLE OR IN PART, FOR ANY OTHER PROJECT WITHOUT THE WRITTEN AUTHORIZATION OF JACOBS.

Jacobs

BUILDING MECHANICAL
FINISHED WATER PUMP STATION SCHEDULES

BID DOCUMENTS

VERIFY SCALE
BAR IS ONE INCH ON ORIGINAL DRAWING.
0 1"

DATE	OCTOBER 2024
PROJ	D3698100
DWG	35-M-601
SHEET	104 of 145

©JACOBS 2024. ALL RIGHTS RESERVED.

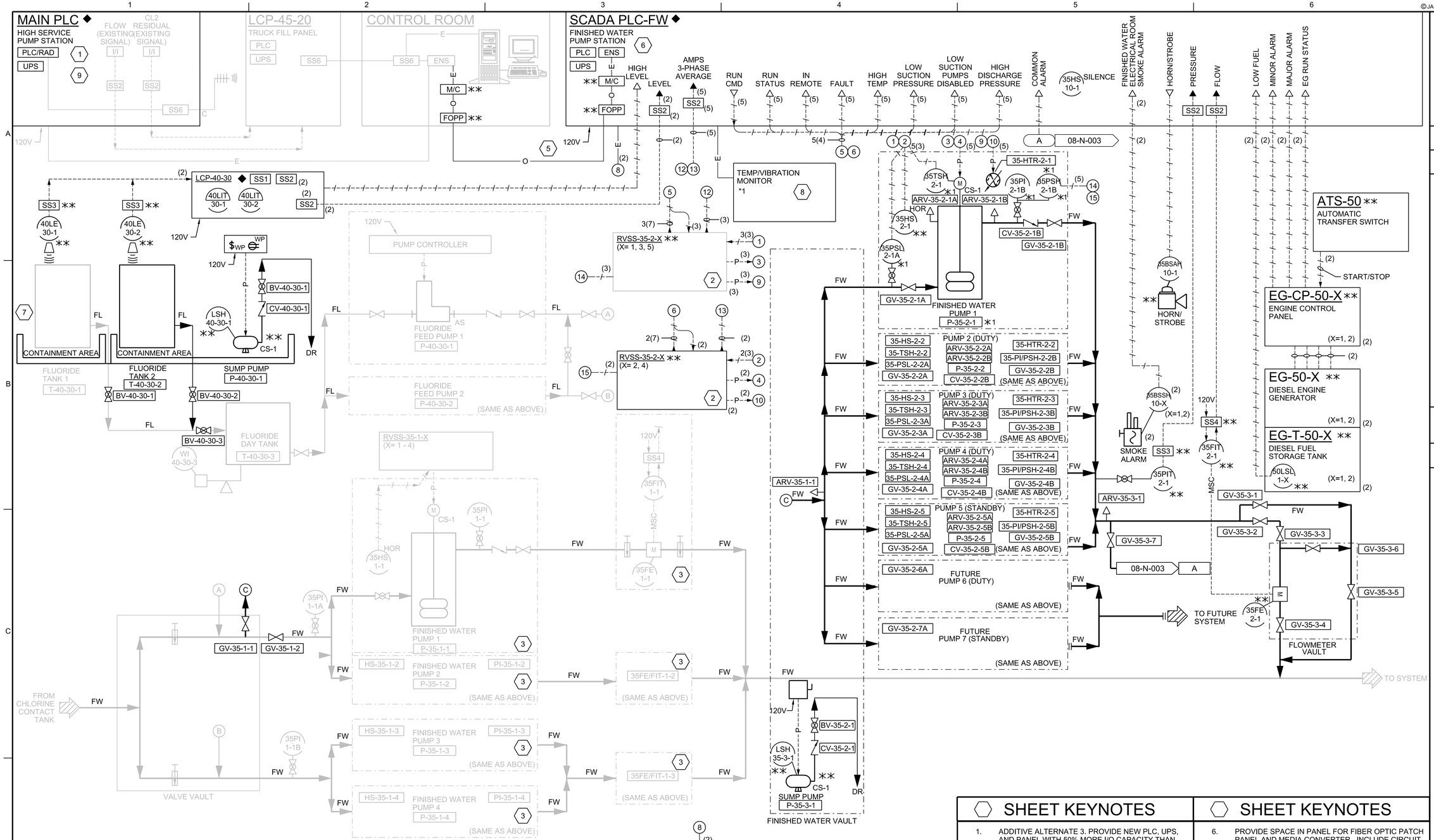

SHEET KEYNOTES

1. ADDITIVE ALTERNATE 3. PROVIDE NEW PLC, UPS, AND PANEL WITH 50% MORE I/O CAPACITY THAN THE EXISTING UNIT.
2. RVSS FOR PUMPS 1, 3, & 5 POWERED FROM MCC-A. RVSS FOR PUMPS 2 & 4 POWERED FROM MCC-A2.
3. ABANDON IN PLACE.
4. PROVIDE SIGNALS AS SHOWN VIA MODBUS TCP TO THE HMI.
5. FIBER OPTIC CABLES, MEDIA CONVERTERS, AND FIBER OPTIC PATCH PANELS TO BE PROVIDED AND INSTALLED BY ELECTRICAL SUBCONTRACTOR. REFER TO SPECIFICATION SECTIONS 40 91 00 AND 40 95 80 FOR REQUIREMENTS.

SHEET KEYNOTES

6. PROVIDE SPACE IN PANEL FOR FIBER OPTIC PATCH PANEL AND MEDIA CONVERTER. INCLUDE CIRCUIT BREAKER WITH 12-48VDC POWER FOR MEDIA CONVERTER. PROVIDE SHELF FOR MEDIA CONVERTER AND ETHERNET SWITCH.
7. EXISTING SUMP PUMP AND LEVEL SWITCH NOT SHOWN FOR CLARITY.
8. TEMPERATURE AND VIBRATION MONITORING SYSTEM SHALL BE PROVIDED BY PUMP SUPPLIER AS PART OF A COMPLETE SYSTEM. PROVIDE TWO VIBRATION SENSORS AND 8 RTD'S PER PUMP. SYSTEM SHALL COMMUNICATE VALUES AND ALARMS TO SCADA USING MODBUS TCP PROTOCOL. SCADA PROGRAMMING SHALL BE PROVIDED BY PICS.
9. RE-TERMINATE AND TEST TRANSFER PUMP 2 AND 4 RUN STATUS SIGNALS FROM MCC-A1 TO HMI.

NO.	DATE	REVISION	BY	APVD

DSGN C HARRIS | DR A PASTRANA | CHK | APVD

PAUL B. KREBS WATER TREATMENT PLANT IMPROVEMENTS
ANNISTON WATER WORKS & SEWER BOARD
CITY OF ANNISTON, ALABAMA

REUSE OF DOCUMENTS: THIS DOCUMENT, AND THE IDEAS AND DESIGNS INCORPORATED HEREIN, AS AN INSTRUMENT OF PROFESSIONAL SERVICE, IS THE PROPERTY OF JACOBS AND IS NOT TO BE USED, IN WHOLE OR IN PART, FOR ANY OTHER PROJECT WITHOUT THE WRITTEN AUTHORIZATION OF JACOBS.

Jacobs

INSTRUMENTATION AND CONTROL
P&ID FLUORIDE AND FINISHED WATER PUMP STATIONS

NTS
VERIFY SCALE
BAR IS ONE INCH ON ORIGINAL DRAWING. 0 1"

DATE	OCTOBER 2024
PROJ	D3698100
DWG	08-N-001
SHEET	of 145

BID DOCUMENTS

FILENAME: 08-N-001_D3698100.dgn PLOT DATE: 10/22/2024 PLOT TIME: 12:52:41 PM

©JACOBS 2024. ALL RIGHTS RESERVED.

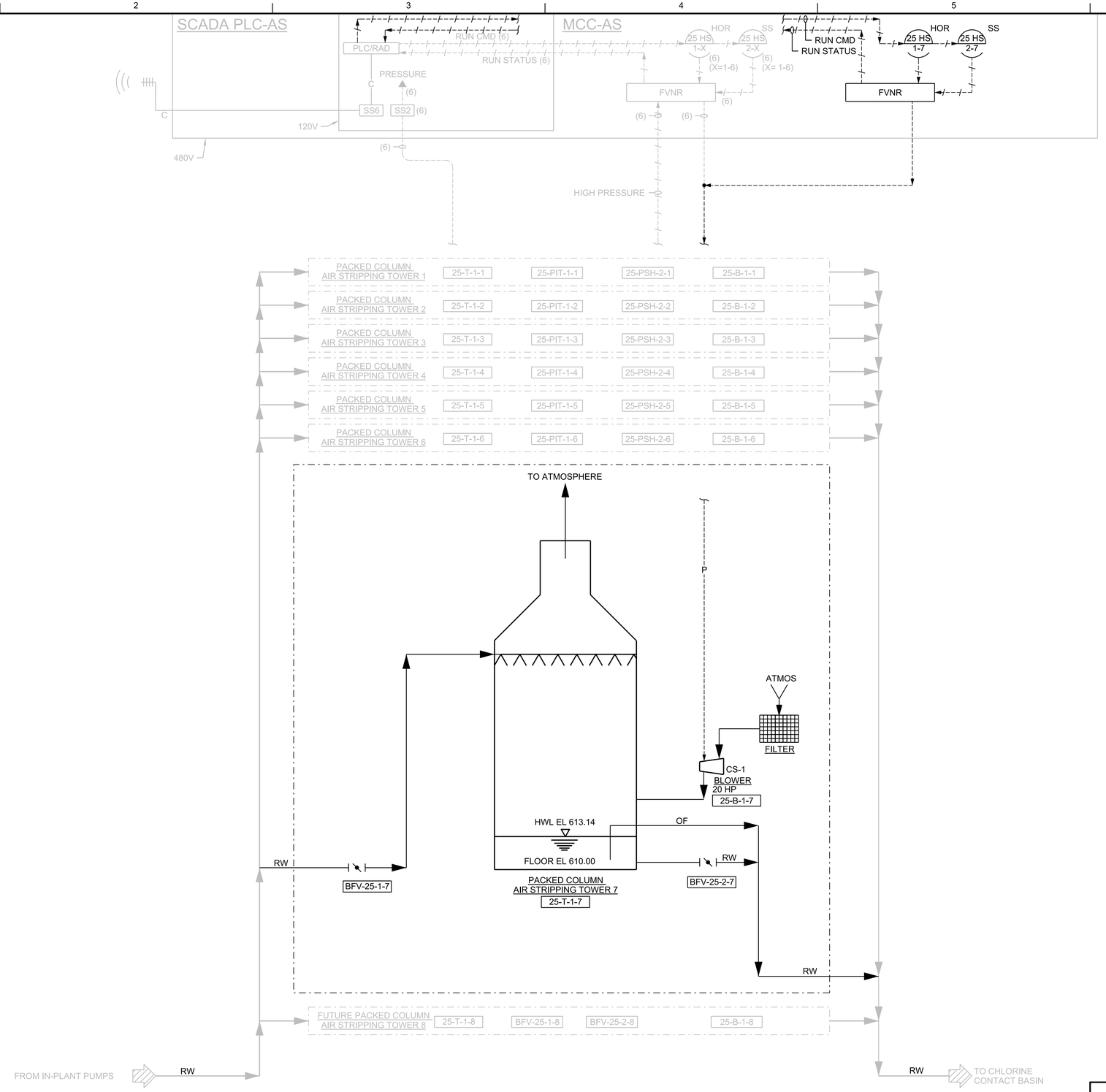

GENERAL SHEET NOTES

1. ALL NEW EQUIPMENT ON THIS DRAWING SHALL BE PROVIDED UNDER ADDITIVE ALTERNATE 2.

ALABAMA LICENSED No. 32425 PROFESSIONAL ENGINEER KIRK OFFNER LEHMAN

NO.	DATE	REVISION	BY	APVD

DSGN C HARRIS | DR A PASTRANA | CHK G GRAY | APVD C HARRIS

PAUL B. KREBS WATER TREATMENT PLANT
IMPROVEMENTS
ANNISTON WATER WORKS & SEWER BOARD
CITY OF ANNISTON, ALABAMA

Jacobs

INSTRUMENTATION AND CONTROL
P&ID
AIR STRIPPING TOWERS

REUSE OF DOCUMENTS: THIS DOCUMENT, AND THE IDEAS AND DESIGNS INCORPORATED HEREIN, AS AN INSTRUMENT OF PROFESSIONAL SERVICE, IS THE PROPERTY OF JACOBS AND IS NOT TO BE USED, IN WHOLE OR IN PART, FOR ANY OTHER PROJECT WITHOUT THE WRITTEN AUTHORIZATION OF JACOBS.

BID DOCUMENTS

VERIFY SCALE
BAR IS ONE INCH ON ORIGINAL DRAWING.
0 1"

DATE	OCTOBER 2024
PROJ	D3698100
DWG	08-N-002
SHEET	106 of 145

©JACOBS 2024. ALL RIGHTS RESERVED.

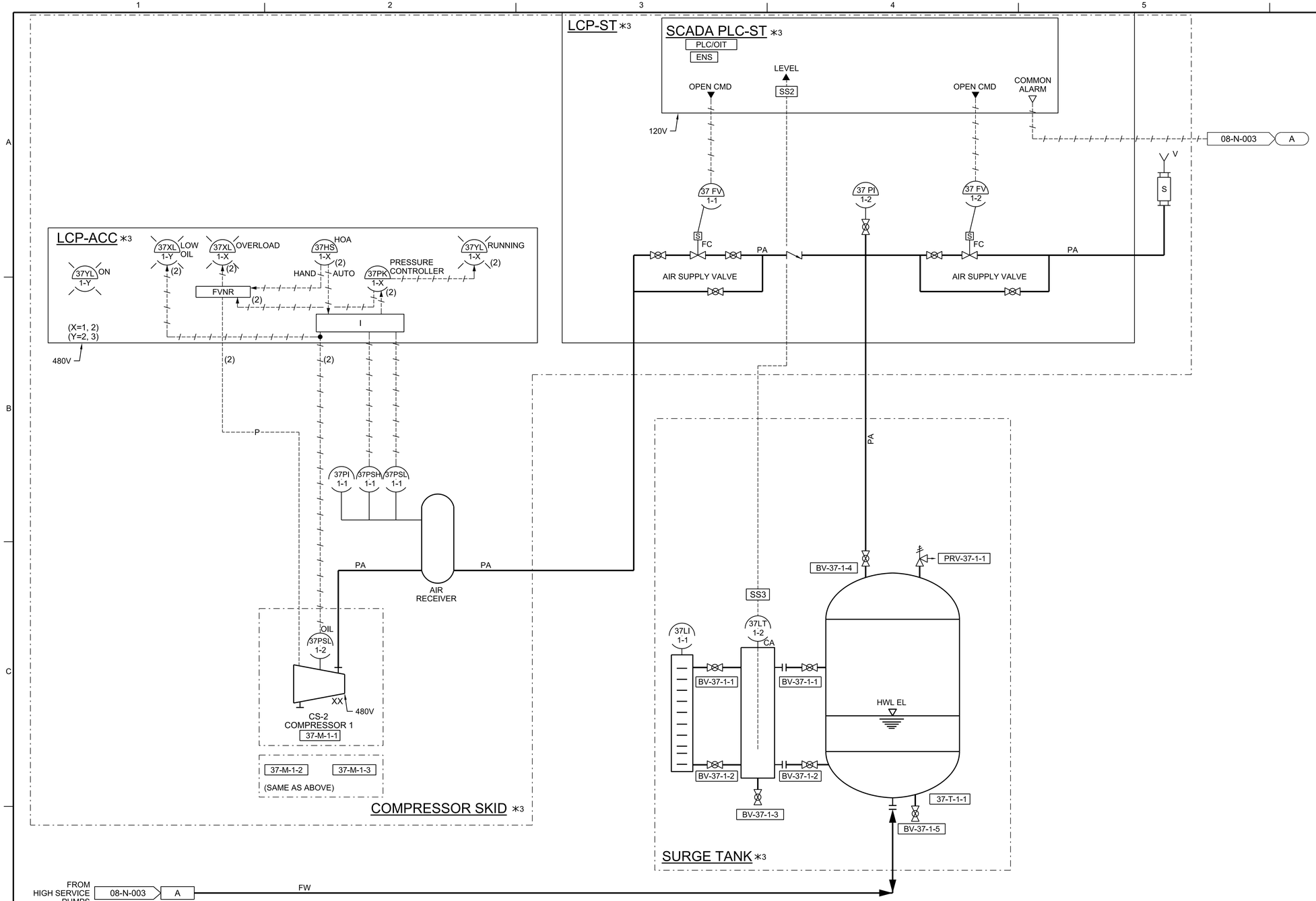

NO.	DATE	DR	REVISION	CHK	APVD	BY	APVD
DSGN	C HARRIS	V MCCORVEY		G GRAY		C HARRIS	

PAUL B. KREBS WATER TREATMENT PLANT
IMPROVEMENTS
ANNISTON WATER WORKS & SEWER BOARD
CITY OF ANNISTON, ALABAMA

REUSE OF DOCUMENTS: THIS DOCUMENT, AND THE IDEAS AND DESIGNS INCORPORATED HEREIN, AS AN INSTRUMENT OF PROFESSIONAL SERVICE, IS THE PROPERTY OF JACOBS AND IS NOT TO BE USED, IN WHOLE OR IN PART, FOR ANY OTHER PROJECT WITHOUT THE WRITTEN AUTHORIZATION OF JACOBS.

Jacobs

INSTRUMENTATION AND CONTROL
P&ID
SURGE TANK

VERIFY SCALE
BAR IS ONE INCH ON ORIGINAL DRAWING.
0 1"

DATE	OCTOBER 2024
PROJ	D3698100
DWG	08-N-003
SHEET	107 of 145

BID DOCUMENTS

©JACOBS 2024. ALL RIGHTS RESERVED.

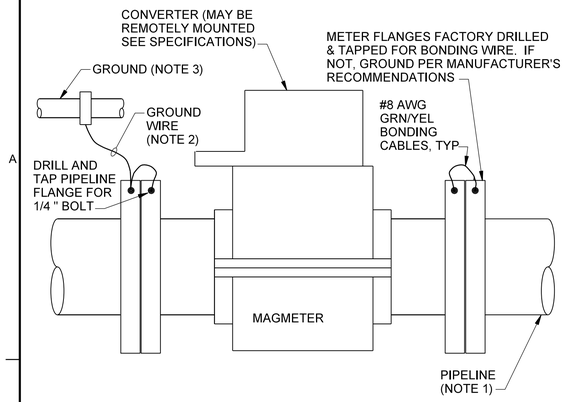

NOTES:

1. USE THIS DETAIL WHEN PIPELINE IS ELECTRICALLY CONDUCTIVE (METAL PIPE WITH NO INSIDE COATING OR LINING).
2. NO. 12 AWG INSULATED IF LENGTH IS LESS THAN 6'. IF MORE THAN 6', INSTALL CONDUCTOR IN 3/4 " CONDUIT.
3. BOND MAGMETER TO ONE OF THE FOLLOWING ACCEPTABLE GROUNDS:
   A) METALLIC WATER PIPE IF BURIED PORTION IS MORE THAN 10'.
   B) STRUCTURAL STEEL
   C) IF BOTH OF THE ABOVE NOT AVAILABLE, INSTALL 3/4 " DIA x 10'-0" LONG COPPER CLAD STEEL GROUND ROD IN GROUND OUTSIDE OF STRUCTURE

CONDUCTIVE PIPELINE MAGMETER GROUNDING

NTS

4091-219G

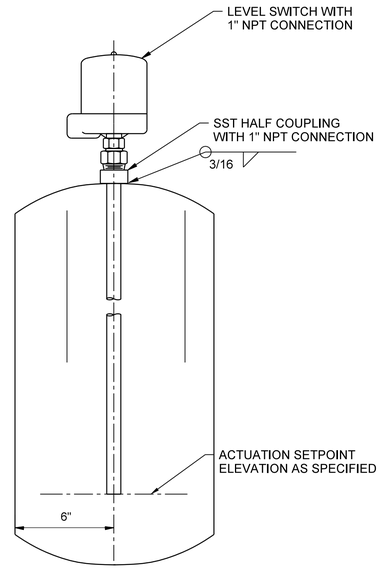

CAPACITANCE TYPE LEVEL SWITCH INSTALLATION

NTS

4091-246C

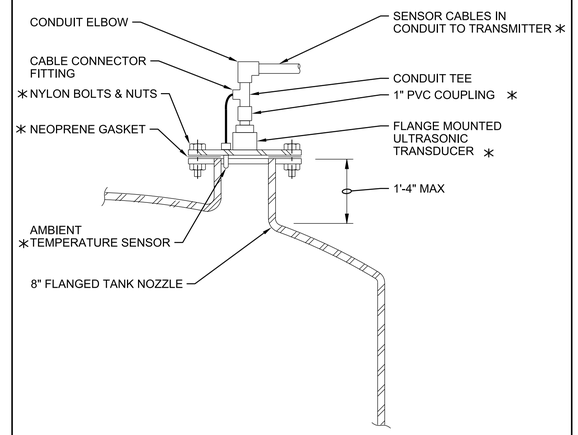

NOTES:

1. COMPONENTS DESIGNATED BY ∗ ARE SUPPLIED BY INSTRUMENT MANUFACTURER.

RADAR LEVEL ELEMENT INSTALLATION - TANK

NTS

4091-252

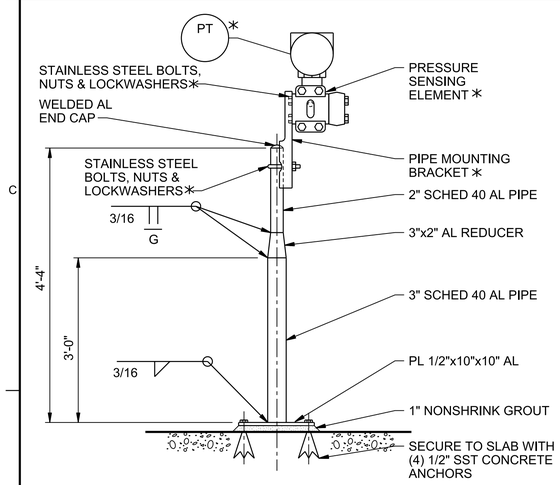

STANCHION MOUNT

NOTES:

1. PAINT ALUMINUM IN CONTACT WITH CONCRETE ACCORDING TO SPECIFICATIONS FOR PAINTING.
2. ALTERNATIVELY, STANCHION SUPPORT SHALL BE O'BRIEN CORP. MODEL 32FP52 WITH 9 MIL ARC SPRAY ZINC METALLIZED COATING; OR EQUAL.
3. COMPONENTS DESIGNATED BY ∗ ARE SUPPLIED BY INSTRUMENT MANUFACTURER.

PRESSURE AND PRESSURE DIFFERENTIAL TRANSMITTER INSTALLATION

NTS

4091-302

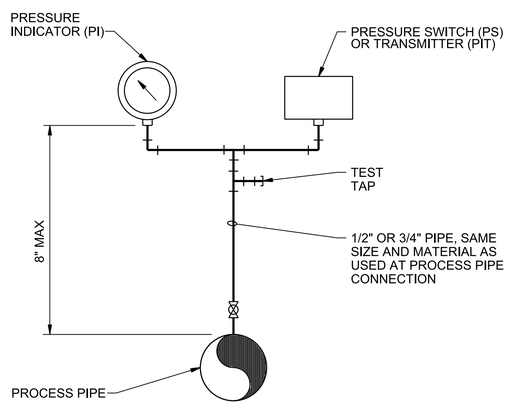

DIRECT MOUNTING

NOTES:

1. INDICATOR AND SWITCH INSTALLATION SHOWN. FOR SINGLE INSTRUMENT INSTALLATIONS, MOUNT DEVICE DIRECTLY ABOVE TEST TAP.

PRESSURE SWITCH TRANSMITTER & INDICATOR INSTALLATION

NTS

4091-304A

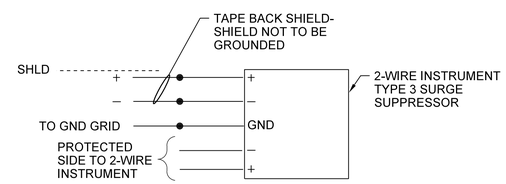

WIRING DIAGRAM

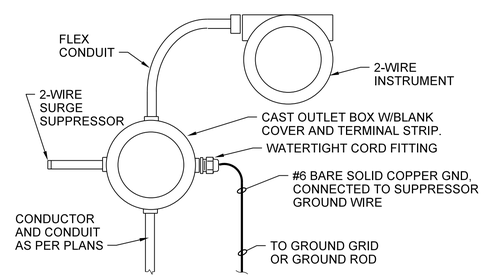

TYPE "3" SURGE SUPPRESSOR INSTALLATION 2-WIRE INSTRUMENT

NTS

4091-415BG

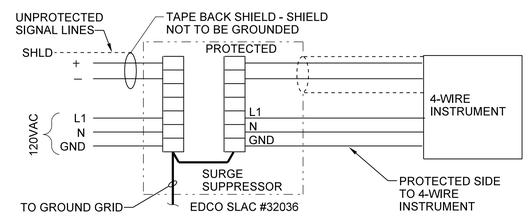

WIRING DIAGRAM

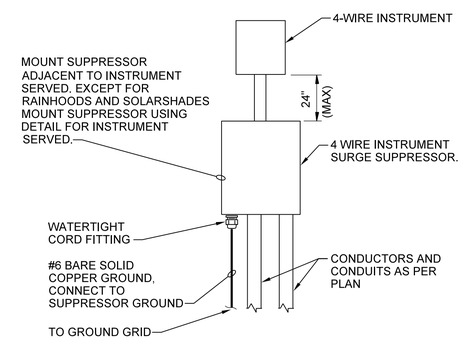

TYPE "B" SURGE SUPPRESSOR INSTALLATION 4- WIRE INSTRUMENT

NTS

4091-420AG

NO.	DATE	REVISION	BY	APVD

DSGN C HARRIS | DR A PASTRANA | CHK G GRAY | APVD C HARRIS

PAUL B. KREBS WATER TREATMENT PLANT
IMPROVEMENTS
ANNISTON WATER WORKS & SEWER BOARD
CITY OF ANNISTON, ALABAMA

REUSE OF DOCUMENTS: THIS DOCUMENT, AND THE IDEAS AND DESIGNS INCORPORATED HEREIN, AS AN INSTRUMENT OF PROFESSIONAL SERVICE, IS THE PROPERTY OF JACOBS AND IS NOT TO BE USED, IN WHOLE OR IN PART, FOR ANY OTHER PROJECT WITHOUT THE WRITTEN AUTHORIZATION OF JACOBS.

Jacobs

INSTRUMENTATION AND CONTROL

STANDARD DETAILS

BID DOCUMENTS

NTS

VERIFY SCALE

BAR IS ONE INCH ON ORIGINAL DRAWING.
0 1"

DATE	OCTOBER 2024
PROJ	D3698100
DWG	99-N-501
SHEET	108 of 145

©JACOBS 2024. ALL RIGHTS RESERVED.

GENERAL ELECTRICAL LEGEND

FIXTURE OUTLET – POLE LIGHT FIXTURE – QUANTITY AND ORIENTATION(S) OF LUMINAIRES AS INDICATED ON PLANS.

FIXTURE OUTLET – POLE LIGHT FIXTURE – QUANTITY OF POLE MOUNTED FIXTURE(S) AS INDICATED ON PLANS – ORIENTATION INDICATES GENERAL DIRECTION OF ILLUMINATION.

NORMAL EMERGENCY

FIXTURE OUTLET – RECESSED LIGHT FIXTURE.

FIXTURE OUTLET – LINEAR – SURFACE OR PENDANT MOUNTED.

FIXTURE OUTLET – LINEAR – RECESSED LIGHT FIXTURE.

FIXTURE OUTLET – WALL MOUNTED LIGHT FIXTURE.

OR FIXTURE OUTLET – EXIT SIGN – CEILING OR WALL MOUNTED AS INDICATED – QUANTITY AND ORIENTATION OF FACES AND DIRECTIONAL ARROWS AS INDICATED.

FIXTURE OUTLET – EMERGENCY LIGHT WITH DIRECTIONAL HEADS.

FIXTURE OUTLET DESIGNATIONS:

A FIXTURE TYPE "A" – MAY BE USED WITH OTHER TYPES.
b SWITCH LEG TO WHICH FIXTURE IS CONNECTED – MAY BE USED WITH OTHER LOWER-CASE LETTERS.
2 CIRCUIT NUMBER – MAY BE USED WITH OTHER NUMBERS.

$ SWITCH OUTLET – S.P.S.T. – 20A – 120–277VAC.

$3 SWITCH OUTLET – 3 WAY – 20A – 120–277VAC.

$4 SWITCH OUTLET – 4 WAY – 20A – 120–277VAC.

$a SWITCH OUTLET – CONTROLS OUTLET "a", ETC.

$X SWITCH OUTLET – MANUAL MOTOR STARTER – TOGGLE TYPE – 2 POLE – SQUARE "D" TYPE K01 WITH ENCLOSURE AS REQUIRED BY APPLICATION – PROVIDE LOCK–OFF HARDWARE.

$3X SWITCH OUTLET – MANUAL MOTOR STARTER – TOGGLE TYPE – 3 POLE – SQUARE "D" TYPE K02 WITH ENCLOSURE AS REQUIRED BY APPLICATION – PROVIDE LOCK–OFF HARDWARE.

$W SWITCH OUTLET – WEATHERPROOF WITH PILOT LIGHT (CLEAR LIGHT ON WITH LOAD ON) – S.P.S.T. – 20A – 120–277VAC – HUBBELL #HBL1221PLC TOGGLE SWITCH WITH #HBL1795 CLEAR BUBBLE WEATHERPROOF PLATE – LABEL FUNCTION WITH ENGRAVED NAMEPLATE.

$CR SWITCH OUTLET – S.P.S.T. – 20A – 120–277VAC – HUBBELL 1281 WITH YELLOW CORROSION RESISTANT PLATE HBL17CM50.

R LIGHTING CONTROL SYSTEM – ON/OFF ROOM CONTROLLER(S) – LOW VOLTAGE – WATTSTOPPER LMRC–102 – MOUNT AS DIRECTED BY SUPPLIER ABOVE ACCESSIBLE CEILING – PROVIDE ALL INTERCONNECTIONS (LOW VOLTAGE AND LINE VOLTAGE) TO SENSORS, CONTROL SWITCHES, LIGHT FIXTURES, ETC. TO CONTROL LOCAL LIGHTING AS DIRECTED BY SUPPLIER – SEE DETAIL "E–RC".

RD LIGHTING CONTROL SYSTEM – DIMMING ROOM CONTROLLER(S) – LOW VOLTAGE – WATTSTOPPER LMRC–212 – MOUNT AS DIRECTED BY SUPPLIER ABOVE ACCESSIBLE CEILING – PROVIDE ALL INTERCONNECTIONS (LOW VOLTAGE AND LINE VOLTAGE) TO SENSORS, CONTROL SWITCHES, LIGHT FIXTURES, ETC. TO CONTROL LOCAL LIGHTING AS DIRECTED BY SUPPLIER – SEE DETAIL "E–RC".

$D LIGHTING CONTROL SYSTEM – SWITCH OUTLET – LOW VOLTAGE – DIGITAL – BUTTONS AS REQUIRED FOR INDEPENDENT DIMMING AND ON/OFF CONTROL OF EACH ZONE IN SPACE – CONNECT TO ASSOCIATED ROOM CONTROLLER PER DIAGRAM "E–RC".

$L LIGHTING CONTROL SYSTEM – SWITCH OUTLET – LOW VOLTAGE – DIGITAL – BUTTONS AS REQUIRED FOR INDEPENDENT ON/OFF CONTROL OF EACH ZONE IN SPACE – CONNECT TO ASSOCIATED ROOM CONTROLLER PER DIAGRAM "E–RC".

OR LIGHTING CONTROL SYSTEM – OCCUPANCY SENSOR – CEILING OR WALL MOUNTED AS INDICATED – EXACT MOUNTING PROVISIONS, SENSOR TYPE AND LOCATION SHALL BE AS DIRECTED BY SUPPLIER FOR PROPER COVERAGE – DIGITAL – DUAL TECHNOLOGY (P.I.R. AND ULTRASONIC) – WATTSTOPPER LMDC–100 (CENTER OF CEILING MOUNT) OR LMDX–100 (WALL OR CEILING CORNER MOUNT) – CONNECT TO ASSOCIATED ROOM CONTROLLER PER DIAGRAM "E–RC".

PC PHOTOELECTRIC CONTROL – S.P.S.T. – 120VAC OR 277VAC – 2000W – TORK 2101 FOR 120V CIRCUITS & TORK 2104 FOR 277V CIRCUITS – MOUNT UNDER SOFFIT OR ON ROOF FACING NORTH (UNLESS NOTED OTHERWISE).

WALL OUTLET – RECEPTACLE – SINGLE – 20A – 125V – 2P – 3W – GROUNDING – – WEATHER RESISTANT – NEMA 5–20R.

DUPLEX DOUBLE DUPLEX

WALL OUTLET – RECEPTACLE – 20A – 125V – 2P – 3W – GROUNDING – NEMA 5–20R – SINGLE PLATE.

WALL OUTLET – RECEPTACLE – 20A – 125V – 2P – 3W – GROUNDING – "GFI" TYPE – WEATHER RESISTANT – NEMA 5–20R – SINGLE PLATE.

OUTLET DESIGNATIONS (APPLY TO ALL OUTLETS, DEVICES & EQUIPMENT):

ES EQUIPMENT MOUNTED TO ALUMINUM SUPPORT FRAME (WITHOUT CANOPY) – SEE DETAIL "E–ES".
VL VERIFY EXACT OUTLET LOCATION WITH EQUIPMENT SUPPLIER OR OWNER PRIOR TO ROUGH–IN.
SRS PROVIDE SUN/RAIN SHIELD FOR DEVICE/EQUIPMENT – SEE DETAIL "E–SRS".
W WEATHER PROOF – OUTLET SHALL BE INSTALLED WITH WEATHERPROOF, IN–USE, CAST COVER.

J FLOOR OR SURFACE–MOUNTED OUTLET – JUNCTION BOX.

J WALL OUTLET – JUNCTION BOX – FLUSH MOUNTED.

J CEILING OUTLET – JUNCTION BOX.

BRANCH/FEEDER CIRCUIT – CONCEALED IN WALLS OR CEILING.

BRANCH/FEEDER CIRCUIT – EXPOSED ON WALLS OR CEILING.

BRANCH/FEEDER CIRCUIT – CONCEALED IN FLOOR SLAB OR DIRT FILL.

BRANCH/FEEDER CIRCUIT – OVERHEAD BETWEEN POLES.

BRANCH/FEEDER CIRCUIT – TO BE DEMOLISHED – MAY BE USED WITH OTHER LINE TYPES.

BRANCH/FEEDER CIRCUIT – HOMERUN – CAN BE USED WITH OTHER BRANCH/FEEDER TYPES.

BRANCH/FEEDER CIRCUIT MODIFIERS:

: 2#12 & 1#12G UNLESS NOTED OTHERWISE.

: 3#12 & 1#12G, ETC. UNLESS NOTED OTHERWISE (TICK MARKS INDICATE CONDUCTOR QUANTITY NOT INCLUDING GROUND WIRE).

10 : 2#10 & 1#10G UNLESS NOTED OTHERWISE (NUMBER INDICATES WIRE AWG).

SIZE CONDUIT PER N.E.C. UNLESS INDICATED OTHERWISE.

CDS BRANCH/FEEDER CIRCUIT – CONTROL WIRING AS DIRECTED BY SUPPLIER IN CONDUIT(S) SIZED 50% LARGER THAN N.E.C MINIMUMS.

UGP UNDERGROUND PRIMARY POWER SERVICE – PROVIDE CONDUITS (QUANTITIES, SIZES, TYPES & INSTALLATION) AS DIRECTED BY UTILITY COMPANY) TO POINT AS DIRECTED BY UTILITY CO. – WHERE SO REQUIRED BY UTILITY CO., PROVIDE PULLBOXES (QUANTITIES, LOCATION, TYPES & INSTALLATION) AS PER UTILITY CO. REQUIREMENTS – COORDINATE LOCATION(S) & EXACT REQUIREMENTS WITH UTILITY CO. PRIOR TO BID AND INCLUDE ALL COSTS IN BID.

UGS UNDERGROUND SECONDARY POWER SERVICE – SEE ASSOCIATED SINGLE LINE DIAGRAM – VERIFY EXACT SERVICE TRANSFORMER LOCATION(S) WITH UTILITY CO. PRIOR TO BID AND INCLUDE ALL COSTS IN BID.

OHP OVERHEAD PRIMARY POWER SERVICE CABLING (WITH TELECOMMUNICATIONS CABLING WHERE APPLICABLE).

FLEXIBLE CONNECTION TO EQUIPMENT.

BRANCH CIRCUIT – RISER DOWN OR GENERAL CONDUIT STUB–OUT.

BRANCH CIRCUIT – RISER UP.

CONCRETE–ENCASED DUCT BANK – SEE DETAIL "E–DR".

POWER DISTRIBUTION EQUIPMENT.

LIGHTING PANEL – SURFACE MOUNTED.

***–** TYPICAL CONTROL & INSTRUMENTATION WIRING MARK (WHERE "**" REPRESENTS A UNIQUE IDENTIFIER CONSISTING OF LETTERS AND NUMBERS) – SEE CONTROL & INSTRUMENTATION WIRING SCHEDULES.

DISCONNECT SWITCH – FUSED.

DISCONNECT SWITCH – NONFUSED.

DISCONNECT SWITCH – INTEGRAL TO EQUIPMENT.

M MOTOR OUTLET – SIZE AS SHOWN.

CONTROL STATION – SEE DETAIL "E–CS".

MOTORIZED VALVE/GATE ACTUATOR.

UH UNIT HEATER – ELECTRICAL – ARROW INDICATES DIRECTION.

T AC THERMOSTAT – AIR CONDITIONING – LOW VOLTAGE – WALL MOUNTED AT 48" A.F.F. – LABEL FUNCTION WITH ENGRAVED NAMEPLATE.

T C THERMOSTAT – COOLING – SINGLE STAGE – LINE VOLTAGE – WALL MOUNTED AT 48" A.F.F. – LABEL FUNCTION WITH ENGRAVED NAMEPLATE.

T H THERMOSTAT – HEATING – SINGLE STAGE – LOW VOLTAGE – WALL MOUNTED AT 48" A.F.F. – LABEL FUNCTION WITH ENGRAVED NAMEPLATE.

SD SMOKE DETECTOR – DUCT MOUNTED FURNISHED BY MECHANICAL – LOCATE DETECTOR IN SUPPLY DUCT FOR INDICATED UNIT AS DIRECTED BY MECHANICAL PER CODE REQUIREMENTS – FURNISH CONNECTIONS TO INDICATED UNIT FOR UNIT SHUTDOWN AS REQUIRED.

W COMBINATION HORN AND VISUAL INDICATOR – FURNISHED BY MECHANICAL – WEATHER–PROOF – WALL MOUNTED AS DIRECTED BY MECHANICAL – LOCATE & LABEL WITH ENGRAVED NAMEPLATE AS DIRECTED BY MECHANICAL.

HT HEAT TRACING WITH INSULATION – SHALL BE PROVIDED ALONG FULL LENGTH(S) OF ALL SMALL DIAMETER PIPING IN INDICATED AREA UNLESS NOTED OTHERWISE – REFER TO CIVIL PLANS FOR PIPING LAYOUTS –VERIFY EXACT TERMINATION LOCATIONS(S) WITH SUPPLIER(S) PRIOR TO ROUGH–IN – REFER TO SPECIFICATION SECTION 26 44 00.

P POWER PULL BOX – SEE DETAIL "E–PB1".

I INSTRUMENTATION PULL BOX – SEE DETAIL "E–PB1".

G BARE SUPPLEMENTAL GROUND WIRE – #4/0G IF NOT INDICATED OTHERWISE – INSTALLED A MINIMUM OF 24" BELOW GRADE AND 24" MINIMUM FROM STRUCTURES WHERE POSSIBLE.

SUPPLEMENTAL GROUNDING SYSTEM – GROUND ROD – 3/4" x10'–0" COPPER–CLAD – TOP DRIVEN A MINIMUM OF 24" BELOW GRADE.

SUPPLEMENTAL GROUNDING SYSTEM – GROUND CONNECTION – CADWELD WHERE BELOW GRADE OR CONCEALED.

SUPPLEMENTAL GROUNDING SYSTEM – CAST GROUND PLATE ASSEMBLY (ERICO OR EQUAL) – CAST FLUSH WITHIN CONCRETE WITH FLEXIBLE BARE COPPER GROUND WIRE CONNECTIONS VIA COMPRESSION LUGS TO EQUIPMENT.

SUPPLEMENTAL GROUNDING SYSTEM – GROUND CONNECTION – TO EQUIPMENT OR STRUCTURE AS FOLLOWS (UNLESS NOTED OTHERWISE):

GEQ #4/0 BARE COPPER GROUND WIRE – BOND TO EQUIPMENT/MOTOR/PANEL/TRANSFORMER, ETC.
GES #2 BARE COPPER GROUND WIRE – BOND TO EQUIPMENT STAND.
GHR #2/0G BARE COPPER GROUND WIRE – BOND TO HANDRAIL & WALKWAY STRUCTURE USING CAST GROUND PLATE & FLEXIBLE JUMPER – SEE DETAIL "E–MMG".
GP #2 BARE COPPER GROUND WIRE – BOND TO PROCESS PIPE.
GS #4/0 BARE COPPER GROUND WIRE – BOND TO STRUCTURE/REBAR/WIRE MESH REINFORCEMENT.

FE FLOW ELEMENT.

LS LEVEL SWITCH, LEAKAGE SENSOR, OR LIMIT SWITCH.

PS PRESSURE SWITCH.

RT RADAR LEVEL TRANSDUCER.

UT ULTRASONIC LEVEL TRANSDUCER.

SV SOLENOID VALVE.

FIT FLOW INDICATING TRANSMITTER.

LIT LEVEL INDICATING TRANSMITTER.

RTD RESISTANCE TEMPERATURE DETECTOR(S) – FURNISHED WITH PUMP.

VBM VIBRATION MONITORING SENSOR(S) – FURNISHED WITH PUMP.

A / E–1 DETAIL DESIGNATOR – "A" INDICATED DETAIL MARK – "E–1" INDICATED SHEET NUMBER WHERE DETAIL IS LOCATED (TYPICAL).

GENERAL ABBREVIATIONS:

(EX) EXISTING TO REMAIN.

(EX–R) EXISTING TO BE REMOVED – REMOVE ALL ASSOCIATED ELECTRICAL EQUIPMENT, DEVICES, CONDUIT AND WIRING CONNECTIONS TO OTHER ELECTRICAL ITEMS.

(EX–RL) EXISTING TO BE RELOCATED – REMOVE ALL ASSOCIATED ELECTRICAL EQUIPMENT, DEVICES, CONDUIT AND WIRING AT EXISTING LOCATION. RELOCATE ITEM TO NEW LOCATION SHOWN ON ELECTRICAL PLANS.

(EX–RP) EXISTING TO BE REPLACED – EXTEND AND RECONNECT EXISTING CONDUIT AND WIRING TO REPLACED ITEM.

ELECTRICAL ABBREVIATIONS:

A	AMPERES.	NSV	NEW, SPARE OR VACATED.
AIC	AMPERES INTERRUPTING CAPACITY.	OC	ON CENTER.
AFF	ABOVE FINISHED FLOOR.	P	POLES.
AL	ALUMINUM.	PF	POWER FACTOR.
ATS	AUTOMATIC TRANSFER SWITCH.	ø	PHASE.
AWG	AMERICAN WIRE GAUGE.	PVC	POLYVINYL CHLORIDE.
C	CONDUIT.		
CU	COPPER.	SLD	SINGLE LINE DIAGRAM.
EC	EMPTY CONDUIT. OR ELECTRICAL CONTRACTOR	SS	STAINLESS STEEL.
		UL	UNDERWRITERS LABORATORY.
FPN	FUSE PER NAMEPLATE.	UNO	UNLESS NOTED OTHERWISE.
G	GROUND CONDUCTOR.	V	VOLTS.
KVA	KILOVOLT–AMPERES.	W	WIRES.
KW	KILOWATT.		
LV	LOW VOLTAGE.	CFCI	CONTRACTOR FURNISHED, CONTRACTOR INSTALLED.
MCM	THOUSAND CIRCULAR MILS.		
MV	MEDIUM VOLTAGE.	CFOI	CONTRACTOR FURNISHED, OWNER INSTALLED.
N	NEUTRAL.		
NEC	NATIONAL ELECTRICAL CODE.	OFOI	OWNER FURNISHED, OWNER INSTALLED.
NEMA	NATIONAL ELECTRICAL MANUFACTURER ASSOCIATION.	OFCI	OWNER FURNISHED, CONTRACTOR INSTALLED.
NIC	NOT IN CONTRACT.		

TYPICAL CIRCUITRY DESIGNATIONS:

2 SETS OF 4#3/0 & 1#3G – 2 1/2"C

- CONDUIT SIZE.
- GROUND CONDUCTOR WIRE GAUGE.
- QUANTITY OF GROUND CONDUCTORS (PER SET)
- PHASE/NEUTRAL CONDUCTOR WIRE GAUGE.
- QUANTITY OF PHASE/NEUTRAL CONDUCTORS (PER SET).
- QUANTITY OF PARALLEL SETS OF THE PHASE/NEUTRAL CONDUCTORS, GROUND CONDUCTOR AND CONDUIT SPECIFIED.

MULTI–CONDUCTOR CONTROL 600V TRAY CABLE DESIGNATIONS:

(2) 4C#14 W/G – 1 1/4"C

- CONDUIT SIZE.
- "W/G" = WITH ADDITIONAL INTEGRAL GROUND CONDUCTOR WITH GREEN INSULATION IN EACH CABLE SHEATH.
- WIRE GAUGE.
- QUANTITY OF CONDUCTORS IN EACH CABLE SHEATH (NOT INCLUDING GROUND).
- QUANTITY OF MULTI–CONDUCTOR CABLES OF THE TYPE SPECIFIED WITHIN THE SPECIFIED CONDUIT.

TWISTED, SHIELDED INSTRUMENTATION CABLE DESIGNATIONS:

(2) #16TSP – 1"C

- CONDUIT SIZE.
- "TSP" = TWISTED SHIELDED PAIR.
- WIRE GAUGE.
- QUANTITY OF INSTRUMENTATION CABLES IN THE SPECIFIED CONDUIT.

JACKSON, RENFRO & ASSOCIATES, INC
ELECTRICAL ENGINEERING & DESIGN
141 VILLAGE STREET • SUITE 1 • BIRMINGHAM, ALABAMA • 35242
PHILIP D. BLACK, PE
phil@jraee.com
(O) 205.536.7120
(P) 205.995.1078
JRA JOB NO. 221201

ALABAMA LICENSED No. 27420 PROFESSIONAL ENGINEER PHILIP D. BLACK
9/18/2024

NO.	DATE	REVISION	BY	APVD
DSGN	DR	CHK	APVD	
ZJG	ZJG	PDB	PDB	PDB

PAUL B. KREBS WATER TREATMENT PLANT IMPROVEMENTS
ANNISTON WATER WORKS & SEWER BOARD
CITY OF ANNISTON, ALABAMA

REUSE OF DOCUMENTS: THIS DOCUMENT, AND THE IDEAS AND DESIGNS INCORPORATED HEREIN, AS AN INSTRUMENT OF PROFESSIONAL SERVICE, IS THE PROPERTY OF JACOBS AND IS NOT TO BE USED, IN WHOLE OR IN PART, FOR ANY OTHER PROJECT WITHOUT THE WRITTEN AUTHORIZATION OF JACOBS.

Jacobs

ELECTRICAL
ELECTRICAL LEGEND

VERIFY SCALE
BAR IS ONE INCH ON ORIGINAL DRAWING.
0 1"

DATE	SEPTEMBER 2024
PROJ	D3698100
DWG	01-E-001
SHEET	109 of 145

BID DOCUMENTS

©JACOBS 2024. ALL RIGHTS RESERVED.

LIGHTING FIXTURE SCHEDULE

MARK	MANUFACTURER	CATALOG NUMBER	VOLTAGE	LAMPS WATTS	LAMPS LUMENS	LAMPS TYPE	MOUNTING HEIGHT	MOUNTING TYPE	REMARKS
A	LITHIONA COLUMBIA DAY-BRITE	2FSL4-72L-EZ1-LP840	120/277	57.3	7,427	LED	CEILING	RECESSED	
AE	LITHIONA COLUMBIA DAY-BRITE	2FSL4-72L-EZ1-LP840-E10WLCP	120/277	57.3	7,427	LED	CEILING	RECESSED	EM
A2	LITHIONA COLUMBIA DAY-BRITE	2FSL2-33L-EZ1-LP840	120/277	27.1	3,412	LED	CEILING	RECESSED	DIM010
A2E	LITHIONA COLUMBIA DAY-BRITE	2FSL2-33L-EZ1-LP840-E10WLCP	120/277	27.1	3,412	LED	CEILING	RECESSED	DIM010, EM
B	LITHIONA COLUMBIA DAY-BRITE	FEM-L48-8000LM-IMAFL-MD-MVOLT-40K-80CRI-STSL	120	50.5	7,435	LED	CEILING	SURFACE	
BE	LITHIONA COLUMBIA DAY-BRITE	FEM-L48-8000LM-IMAFL-MD-MVOLT-40K-80CRI-STSL-E10WMCP	120	50.5	7,435	LED	CEILING	SURFACE	EM
B2	LITHIONA COLUMBIA DAY-BRITE	FEM-L48-6000LM-IMAFL-MD-MVOLT-40K-80CRI	120	37.8	5,651	LED	CEILING	SURFACE	
C	LITHIONA COLUMBIA DAY-BRITE	ZL1D-L48-3000LM-FST-120-40K-80CRI	120	30	4,028	LED	9'-0" A.F.F.	BALL-SWIVEL PENDANT	
CE	LITHIONA COLUMBIA DAY-BRITE	ZL1D-L48-3000LM-FST-120-40K-80CRI-E10WLCP	120	30	4,028	LED	9'-0" A.F.F.	BALL-SWIVEL PENDANT	EM
D	LITHIONA COLUMBIA DAY-BRITE	EVO4-40/30-AR-LS-MWD	120	31.2	3,110	LED	CEILING	RECESSED	
CA	LITHIONA COLUMBIA DAY-BRITE	EVO6-40/25-AR-WR-LS-WD	120	24.5	2537	LED	CEILING	RECESSED	FME
CAE	LITHIONA COLUMBIA DAY-BRITE	EVO6-40/25-AR-WR-LS-WD-E10WCP	120	24.5	2537	LED	CEILING	RECESSED	EM, FME
EM	LITHONIA EMERGI-LITE DUAL-LITE	EXTL-SP110L-LTP	120	5.3	N/A	LED	9'-6" A.F.F.	SURFACE OR WALL MOUNT	EMX
H	LITHIONA COLUMBIA DAY-BRITE	JEBL-18000LM-FRGL-120-40K-80CRI-PM	120	135	16,574	LED	EAVE HEIGHT	BALL-SWIVEL CONDUIT STEM	
S	LITHIONA COLUMBIA DAY-BRITE	EV04SH-40/20-DFF-SOL	120	19.5	1,684	LED	CEILING	RECESSED	
W	LITHIONA COLUMBIA DAY-BRITE	DSXW1-LED-10C-530-40K-T3M-MVOLT	120	19	2,159	LED	AS NOTED	OUTLET BOX	FSA
WE	LITHIONA COLUMBIA DAY-BRITE	DSXW1-LED-10C-530-40K-T3M-MVOLT-E20WC	120	19	2,159	LED	AS NOTED	OUTLET BOX	EM, FSA
X1	LITHIONA COLUMBIA DAY-BRITE	LQC-G-EL-N	120	FURNISHED BY MANUFACTURER			CEILING OR ABOVE DOOR	OUTLET BOX	EMX
X3	LITHONIA COLUMBIA DAY-BRITE	LVS-W-1G-ELN	120	FURNISHED WITH FIXTURE			CEILING OR ABOVE DOOR	OUTLET BOX	EMX
Y1	LITHIONA COLUMBIA DAY-BRITE	DSX1-LED-P2-40K-80CRI-T3M	480	68	9,763	LED	MOUNT TO 20' ROUND, STRAIGHT ANODIZED ALUMINUM GRAY POLE - SEE DETAIL "E-LP1"		CAM
Y2	LITHIONA COLUMBIA DAY-BRITE	TWO (2) RSXF2-LED-P2-40K-WFL-IS-FAO-UBV	480	2x111	2x16,248	LED	MOUNT TO EXISTING POLE WITH NEW TWIN TENON MOUNT HARDWARE		VMH
Y3	LITHIONA COLUMBIA DAY-BRITE	THREE (3) RSXF2-LED-P2-40K-WFL-IS-FAO-UBV	480	3x111	3x16,248	LED	MOUNT TO EXISTING POLE WITH NEW TRIPLE TENON MOUNT HARDWARE		VMH

LIGHTING FIXTURE SCHEDULE GENERAL NOTES:

1. ALL LAMPS SHALL BE 4000K WITH A MINIMUM CRI OF 80 UNLESS NOTED OTHERWISE.
2. CONTRACTOR SHALL COORDINATE ALL FIXTURE MOUNTING PROVISIONS WITH THE ASSOCIATED CEILING TYPE(S) PRIOR TO ORDERING FIXTURES.
3. ALL FIXTURES AND BALLASTS/DRIVERS SHALL BE RATED FOR OPERATION IN AMBIENT TEMPERATURES UP TO 55 DEGREES CELSIUS.
4. TO ENSURE PROPER COORDINATION AND LONG TERM SUPPORT FOR THE OWNER, ALL LIGHTING FIXTURES SHALL BE PURCHASED THROUGH MANUFACTURER'S REPRESENTATIVES AND DISTRIBUTORS LOCATED WITHIN ONE-HUNDRED & FIFTY (150) MILES OF THE PROJECT SITE. SUBMITTALS RECEIVED THAT DO NOT COMPLY WITH THIS REQUIREMENT WILL BE REJECTED WITHOUT REVIEW. THE CONTRACTOR SHALL BE RESPONSIBLE FOR ANY DELAYS CAUSED BY NON-COMPLIANCE WITH THIS REQUIREMENT.

LIGHTING FIXTURE SCHEDULE KEYED NOTES:

CAM PROVIDE MOUNTING HARDWARE, NIPPLE OPENINGS, ETC. FOR EXISTING CAMERA(S) WHERE APPLICABLE, AND REINSTALL (EX) CAMERAS TO NEW POLES AS REQUIRED. VERIFY EXACT MOUNTING REQUIREMENTS PRIOR TO SUBMITTING SHOP DRAWINGS

DIM010 PROVIDE INTEGRAL 0-10V DIMMING DRIVER AS REQUIRED FOR 10% TO 100% FLICKER-FREE DIMMING CAPABILITY FOR THE DESIGNATED FIXTURE(S). VERIFY THAT THE PROPOSED DIMMING DRIVER IS COMPATIBLE WITH THE ASSOCIATED DIMMER PRIOR TO ORDERING FIXTURE. INSTALL ALL LOW VOLTAGE WIRING AS REQUIRED FROM DIMMER TO FIXTURE(S)

EM EMERGENCY FIXTURE. PROVIDE EMERGENCY BATTERY PACK RATED FOR AT LEAST 500 LUMENS.

EMX EMERGENCY FIXTURE. PROVIDE EMERGENCY BATTERY PACK RATED FOR AT LEAST 90 MINUTES OF OPERATION.

FME PROVIDE FINISH TO MATCH EXISTING. VERIFY EXACT REQUIREMENTS PRIOR TO SUBMITTING SHOP DRAWINGS.

FSA PROVIDE FINISH AS SELECTED BY ARCHITECT.

VMH VERIFY EXACT MOUNTING HARDWARE REQUIREMENTS PRIOR TO SUBMITTING SHOP DRAWINGS.

GENERAL ELECTRICAL NOTES

1. CONTRACTOR SHALL VERIFY ALL REQUIREMENTS FOR POWER SERVICE WITH UTILITY COMPANY PRIOR TO SUBMITTING BID. IF THEIR REQUIREMENTS ARE AT A VARIANCE WITH THOSE SHOWN ON PLANS THE CONTRACTOR SHALL INFORM ENGINEER IMMEDIATELY. ALL COSTS INCURRED WITH THE UTILITY COMPANY FOR SERVICE SHALL BE INCLUDED IN BID PRICE. IF SUCH COSTS ARE NOT AVAILABLE AT BID TIME CONTRACTOR SHALL INCLUDE WITH BID A LETTER FROM A RESPONSIBLE PARTY WITH THE UTILITY COMPANY STATING SUCH, AND COSTS WILL THEN BE EXCLUDED FROM THE BID PRICE.
2. SPECIAL ATTENTION IS CALLED TO THE FACT THAT THIS IS AN OPERATING FACILITY, AND AS SUCH, NO UNNECESSARY SHUTDOWNS WILL BE ALLOWED. ANY NECESSARY SHUTDOWNS SHALL BE APPROVED IN WRITING BY THE PLANT MANAGER A MINIMUM OF TWO (2) WEEKS IN ADVANCE.
3. ELECTRICAL PLANS & DETAILS INDICATE TYPICAL WIRING REQUIREMENTS FOR PROCESS EQUIPMENT BASED ON BASIS–OF–DESIGN SYSTEMS/EQUIPMENT. VERIFY EXACT WIRING REQUIREMENTS & ALL DEVICE LOCATIONS WITH APPROVED MANUFACTURERS SHOP DRAWINGS PRIOR TO ROUGH–IN. NO ADDITIONAL COMPENSATION WILL BE PAID FOR ADJUSTMENTS REQUIRED TO COMPLY WITH REQUIREMENTS OF NON BASIS–OF–DESIGN SYSTEMS/EQUIPMENT SUPPLIERS.
4. THIS CONTRACTOR SHALL VERIFY EXACT REQUIREMENTS FOR ALL MECHANICAL EQUIPMENT FROM MANUFACTURER'S RECOMMENDATIONS PRIOR TO ROUGHING IN CONDUIT AND SHALL ADJUST CONDUIT SIZE, WIRE SIZE AND CIRCUIT PROTECTION SIZE ACCORDINGLY. IF REQUIREMENTS ARE LARGER THAN CALLED FOR ON ELECTRICAL PLANS NOTIFY ENGINEER IMMEDIATELY.
5. CONTRACTOR SHALL VISIT THE SITE OF THE WORK PRIOR TO SUBMITTING BID TO EXAMINE CAREFULLY LOCAL CONDITIONS AND DIFFICULTIES TO BE ENCOUNTERED. ANY DISCREPANCY BETWEEN PLANS AND EXISTING CONDITIONS SHALL IMMEDIATELY BE CALLED TO THE ATTENTION OF THE ENGINEER.
6. ALL EQUIPMENT SHALL BE GROUNDED AND BONDED IN ACCORDANCE WITH NEC.
7. THE ELECTRICAL CONTRACTOR SHALL BE RESPONSIBLE FOR INSTALLATION AND MOUNTING OF ALL INSTRUMENTATION DEVICES. SEE INSTALLATION DETAILS ON CIVIL & ELECTRICAL DRAWINGS AND PROVIDED BY SUPPLIERS. COORDINATE ALL REQUIREMENTS WITH SUPPLIERS PRIOR TO ROUGH–IN.
8. ALL HVAC CIRCUITRY (INCLUDING CONTROL CIRCUITRY NOT SHOWN ON THESE PLANS) SHALL BE INSTALLED TO MEET DIVISION 26 SPECIFICATIONS. COORDINATE ALL HVAC CONTROLS CIRCUITRY REQUIRED WITH HVAC CONTRACTOR PRIOR TO BID.
9. EXISTING CIRCUIT LABELS MODIFIED BY THIS RENOVATION SHALL BE REPLACED TO INDICATE CONNECTED CIRCUITS.
10. THIS CONTRACTOR SHALL FURNISH ALL MATERIALS AND LABOR NECESSARY TO EXTEND CIRCUITS AND MAKE RECONNECTIONS TO ANY ACTIVE ELECTRICAL DEVICES ON WHICH THE BRANCH CIRCUIT IS INTERRUPTED BY THIS ALTERATION. CARE SHALL BE TAKEN TO INSURE THAT EXISTING PANEL AND FEEDER RATINGS ARE NOT EXCEEDED.
11. THIS CONTRACTOR SHALL PROVIDE A COMPLETE U.L. CERTIFIED LIGHTNING PROTECTION SYSTEMS FOR THE NEW FINISHED WATER PUMPING STATION BUILDING/STRUCTURES IN ACCORDANCE WITH SPECIFICATIONS SECTION 26 41 00. EXPOSED HORIZONTAL CABLING ON TOPS OF ROOFING IS ACCEPTABLE. PROVIDE A COMPLETE SET OF INSTALLATION DRAWINGS AND DETAILS WITH SUBMITTALS.
12. WET OR PROCESS AREAS (FOR USE IN DETERMINING TYPES OF MATERIALS REQUIRED PER ELECTRICAL SPECIFICATIONS) SHALL BE DEFINED AS ALL AREAS WITHIN THE PROJECT SCOPE EXCEPT THE FOLLOWING:
    A. OFFICES, RESTROOMS, STORAGE ROOMS, ELECTRICAL ROOMS AND OTHER SIMILAR ANCILARY CONDITIONED SPACES.
13. CONTRACTOR SHALL BE RESPONSIBLE FOR PROVIDING IDENTIFICATION/LABELING FOR ALL NEW OR REFED INSTRUMENTS, UTILIZATION EQUIPMENT (PUMPS, ETC.), CONTROL DEVICES, CONTROL PANELS, STARTERS, POWER PANELS, ETC. (REGARDLESS OF WHICH ENTITY PROVIDES THE EQUIPMENT) PER DETAILED REQUIREMENTS OF SPECIFICATION SECTION 26 05 53.
14. ALL INDICATING TRANSMITTER DEVICES (FLOW TRANSMITTERS, LEVEL TRANSMITTERS, ETC.) LOCATED IN EXTERIOR ENVIRONMENTS SHALL BE INSTALLED WITHIN SUN/RAIN SHIELDS PER DETAIL "E–SRS". CONTRACTOR SHALL PROVIDE SUN/RAIN SHIELDS (INCLUDING INSTRUMENTS FURNISHED BY EQUIPMENT SUPPLIERS). CONTRACTOR SHALL COORDINATE WITH INSTRUMENT SUPPLIER(S) PRIOR TO SUBMITTAL OF SHOP DRAWINGS.
15. SURGE PROTECTION DEVICES SHALL BE PROVIDED FOR ALL COPPER CONNECTIONS AT ALL INSTRUMENTS AS INDICATED IN "INSTRUMENTATION AND CONTROL COMPOSNENTS" SPECIFICATIONS. CONTRACTOR SHALL MOUNT/INSTALL AT FIELD EQUIPMENT/DEVICES AS REQUIRED.
15. THIS PROJECT/SITE IS LOCATED WITHIN A SEISMIC RISK AREA, CLASSIFIED AS IBC RISK CATEGORY IV. AS SUCH, ALL ELECTRICAL EQUIPMENT (GENERATORS, SWITCHGEAR, SWITCHBOARDS, PANELS, TRANSFORMERS, CONDUITS, ETC.) SHALL BE SUPPORTED/ANCHORED/BRACED IN STRICT COMPLIANCE WITH SPECIFICATION SPECIFICATION SECTION 01 88 15 ("ANCHORAGE AND BRACING") REQUIREMENTS. PROVIDE ANCHORAGE AND BRACING CALCULATIONS, STORAGE, INSTALLATION, TESTING, ETC. PER DETAILED REQUIREMENTS IN SECTION 01 88 15. ADDITIONALLY, ELECTRICAL EQUIPMENT SHALL HAVE SEISMIC CERTIFICATION PER SPECIFICATION REQUIREMENTS. SEE DIVISION 26/27 ELECTRICAL SPECIFICATIONS AND SPECIFICATION 01 45 36 FOR ADDITIONAL EQUIPMENT REQUIREMENTS.

ELECTRICAL BASE BID & ALTERNATE NOTES

1. BASE BID DESCRIPTION:
   THE BASE BID SHALL INCLUDE ALL ELECTRICAL SCOPE/PROVISIONS SHOWN ON THESE PLANS EXCEPT AIR STRIPPING TOWER NO. 7 (AND ASSOCIATED FEEDERS/CIRCUITRY/EQUIPMENT STAND/SUPPLEMENTAL GROUNDING/MCC–AS MODIFICATIONS/ SCADA INPUTS & OUTPUTS/ETC).
2. ADDITIVE ALTERNATE NO. 2 DESCRIPTION:
   ADDITIVE ALTERNATE NO. 2 SHALL INCLUDE ALL ELECTRICAL WORK SHOWN FOR AIR STRIPPING TOWER NO. 7 (ASSOCIATED FEEDERS/CIRCUITRY/EQUIPMENT STAND/SUPPLEMENTAL GROUNDING/MCC–AS MODIFICATIONS/SCADA INPUTS & OUTPUTS, ETC.).

JACKSON, RENFRO & ASSOCIATES, INC.
ELECTRICAL ENGINEERING & DESIGN
141 VILLAGE STREET • SUITE 1 • BIRMINGHAM, ALABAMA • 35242
JRA JOB NO. 221201
PHILIP D. BLACK, PE
phil@jraee.com
(D) 205.536.7120
(P) 205.995.1078

ALABAMA LICENSED No. 27420 PROFESSIONAL ENGINEER PHILIP D. BLACK
9/18/2024

NO.	DATE	REVISION	BY	APVD
DSGN	ZJG	DR ZJG	CHK PDB	APVD PDB

PAUL B. KREBS WATER TREATMENT PLANT IMPROVEMENTS
ANNISTON WATER WORKS & SEWER BOARD
CITY OF ANNISTON, ALABAMA

REUSE OF DOCUMENTS: THIS DOCUMENT, AND THE IDEAS AND DESIGNS INCORPORATED HEREIN, AS AN INSTRUMENT OF PROFESSIONAL SERVICE, IS THE PROPERTY OF JACOBS AND IS NOT TO BE USED, IN WHOLE OR IN PART, FOR ANY OTHER PROJECT WITHOUT THE WRITTEN AUTHORIZATION OF JACOBS.

Jacobs

ELECTRICAL
ELECTRICAL NOTES AND FIXTURE SCHEDULE

VERIFY SCALE
BAR IS ONE INCH ON ORIGINAL DRAWING.
0 1"

DATE	SEPTEMBER 2024
PROJ	D3698100
DWG	01-E-002
SHEET	110 of 145

BID DOCUMENTS

©JACOBS 2024. ALL RIGHTS RESERVED.

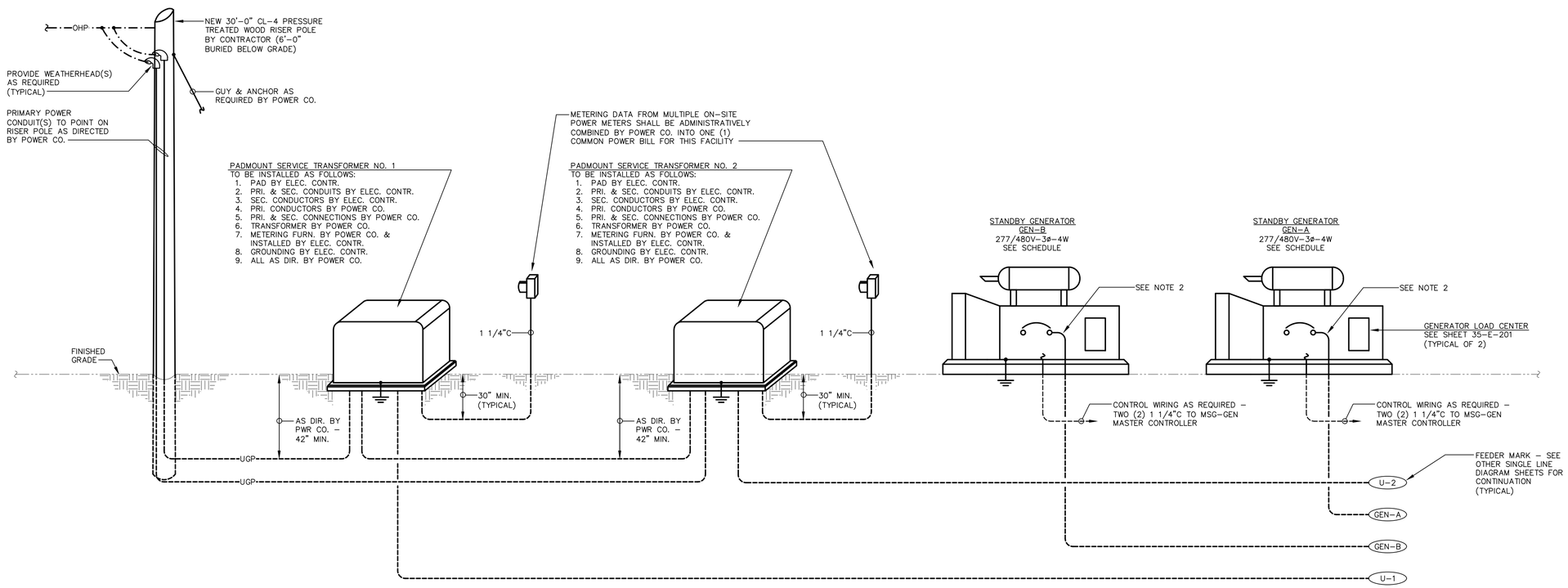

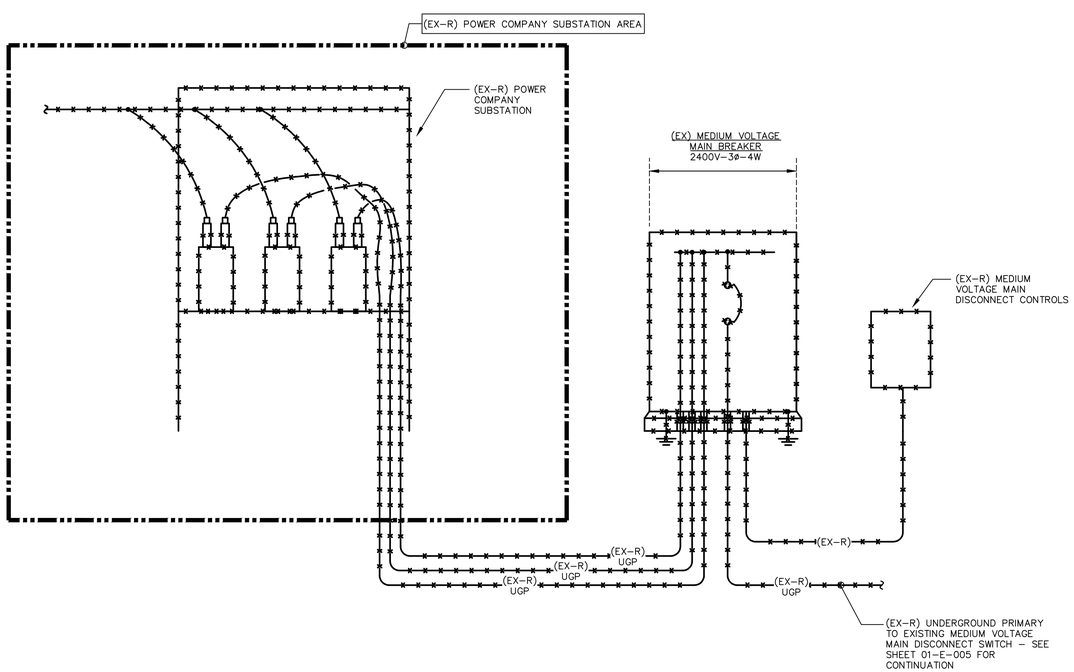

SINGLE LINE DIAGRAM – PART A (SERVICE TRANSFORMERS AND GENERATORS)

SCALE : NONE

SINGLE LINE DIAGRAM NOTES

1. REFER TO EQUIPMENT, PANELBOARD, MCC, GENERATOR AND TRANSFORMER SCHEDULES FOR ALL APPLICABLE FEEDER SIZES, BREAKER RATINGS, BUS RATINGS, TRANSFORMER RATINGS, ETC. NOT SHOWN ON THIS DIAGRAM.
2. NEW NEUTRAL-GROUND BONDS SHALL ONLY BE MADE AT THE FOLLOWING LOCATIONS:
   A. MSG-1 & MSG-2 MAIN UTILITY BREAKERS.
   B. GENERATORS GEN-A & GEN-B.
   C. SECONDARY SIDES OF ALL TRANSFORMERS.
3. ALL ELECTRICAL DISTRIBUTION & UTILIZATION EQUIPMENT AT FACILITY (NEW OR EXISTING) SHALL BE LABELED/RELABELED PER DETAIL "E-EDL".

JACKSON, RENFRO & ASSOCIATES, INC.
ELECTRICAL ENGINEERING & DESIGN
141 VILLAGE STREET • SUITE 1 • BIRMINGHAM, ALABAMA • 35242
PHILIP D. BLACK, PE
phil@jraee.com
(D) 205.536.7120
(P) 205.995.1078
JRA JOB NO. 221201

ALABAMA LICENSED No. 27420 PROFESSIONAL ENGINEER PHILIP D. BLACK
9/18/2024

NO.	DATE	REVISION	BY	APVD
DSGN	ZJG	DR	CHK	APVD
		ZJG	PDB	PDB

PAUL B. KREBS WATER TREATMENT PLANT IMPROVEMENTS
ANNISTON WATER WORKS & SEWER BOARD
CITY OF ANNISTON, ALABAMA

REUSE OF DOCUMENTS: THIS DOCUMENT, AND THE IDEAS AND DESIGNS INCORPORATED HEREIN, AS AN INSTRUMENT OF PROFESSIONAL SERVICE, IS THE PROPERTY OF JACOBS AND IS NOT TO BE USED, IN WHOLE OR IN PART, FOR ANY OTHER PROJECT WITHOUT THE WRITTEN AUTHORIZATION OF JACOBS.

Jacobs

ELECTRICAL
SINGLE LINE DIAGRAM - PART A (SERVICE TRANSFORMERS AND GENERATORS)

VERIFY SCALE
BAR IS ONE INCH ON ORIGINAL DRAWING.
0 1"

DATE	SEPTEMBER 2024
PROJ	D3698100
DWG	01-E-003
SHEET	111 of 145

BID DOCUMENTS

©JACOBS 2024. ALL RIGHTS RESERVED.

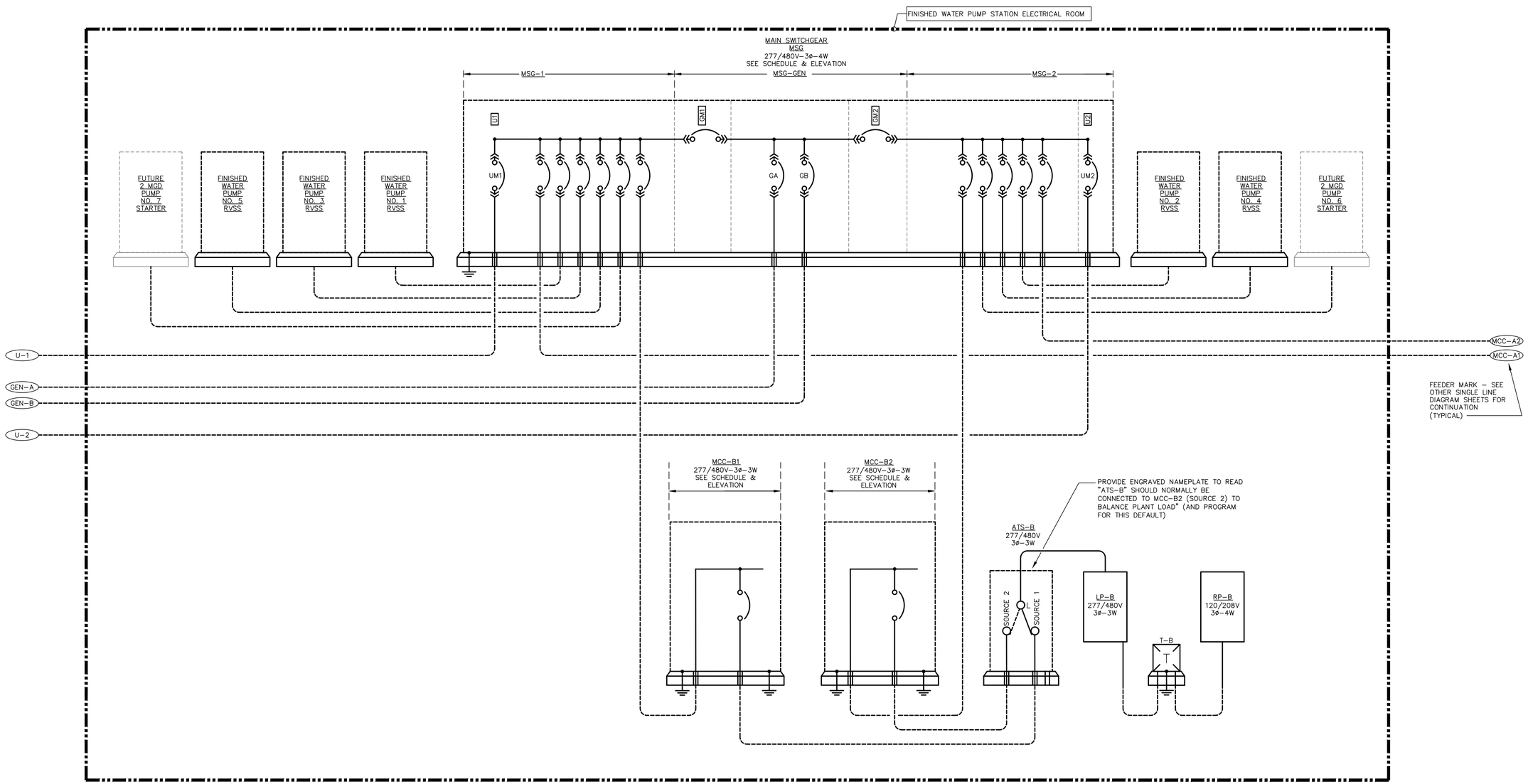

SINGLE LINE DIAGRAM NOTES

1. REFER TO EQUIPMENT, PANELBOARD, MCC, GENERATOR AND TRANSFORMER SCHEDULES FOR ALL APPLICABLE FEEDER SIZES, BREAKER RATINGS, BUS RATINGS, TRANSFORMER RATINGS, ETC. NOT SHOWN ON THIS DIAGRAM.
2. NEW NEUTRAL–GROUND BONDS SHALL ONLY BE MADE AT THE FOLLOWING LOCATIONS:
   A. MSG–1 & MSG–2 MAIN UTILITY BREAKERS.
   B. GENERATORS GEN–A & GEN–B.
   C. SECONDARY SIDES OF ALL TRANSFORMERS.
3. ALL ELECTRICAL DISTRIBUTION & UTILIZATION EQUIPMENT AT FACILITY (NEW OR EXISTING) SHALL BE LABELED/RELABELED PER DETAIL "E–EDL".

SINGLE LINE DIAGRAM – PART B (FINISHED WATER PUMP STATION)

SCALE : NONE

JACKSON, RENFRO & ASSOCIATES, INC
ELECTRICAL ENGINEERING & DESIGN
141 VILLAGE STREET • SUITE 1 • BIRMINGHAM, ALABAMA • 35242
PHILIP D. BLACK, PE
phil@jraee.com
(O) 205.536.7120
(P) 205.995.1078
JRA JOB NO. 221201

ALABAMA LICENSED No. 27420 PROFESSIONAL ENGINEER PHILIP D. BLACK
9/18/2024

NO.	DATE	REVISION	BY	APVD

DSGN ZJG | DR ZJG | CHK PDB | APVD PDB

PAUL B. KREBS WATER TREATMENT PLANT
IMPROVEMENTS
ANNISTON WATER WORKS & SEWER BOARD
CITY OF ANNISTON, ALABAMA

REUSE OF DOCUMENTS: THIS DOCUMENT, AND THE IDEAS AND DESIGNS INCORPORATED HEREIN, AS AN INSTRUMENT OF PROFESSIONAL SERVICE, IS THE PROPERTY OF JACOBS AND IS NOT TO BE USED, IN WHOLE OR IN PART, FOR ANY OTHER PROJECT WITHOUT THE WRITTEN AUTHORIZATION OF JACOBS.

Jacobs

ELECTRICAL
SINGLE LINE DIAGRAM - PART B (FINISHED WATER PUMP STATION)

VERIFY SCALE
BAR IS ONE INCH ON ORIGINAL DRAWING.
0 1"

DATE	SEPTEMBER 2024
PROJ	D3698100
DWG	01-E-004
SHEET	112 of 145

BID DOCUMENTS

©JACOBS 2024. ALL RIGHTS RESERVED.

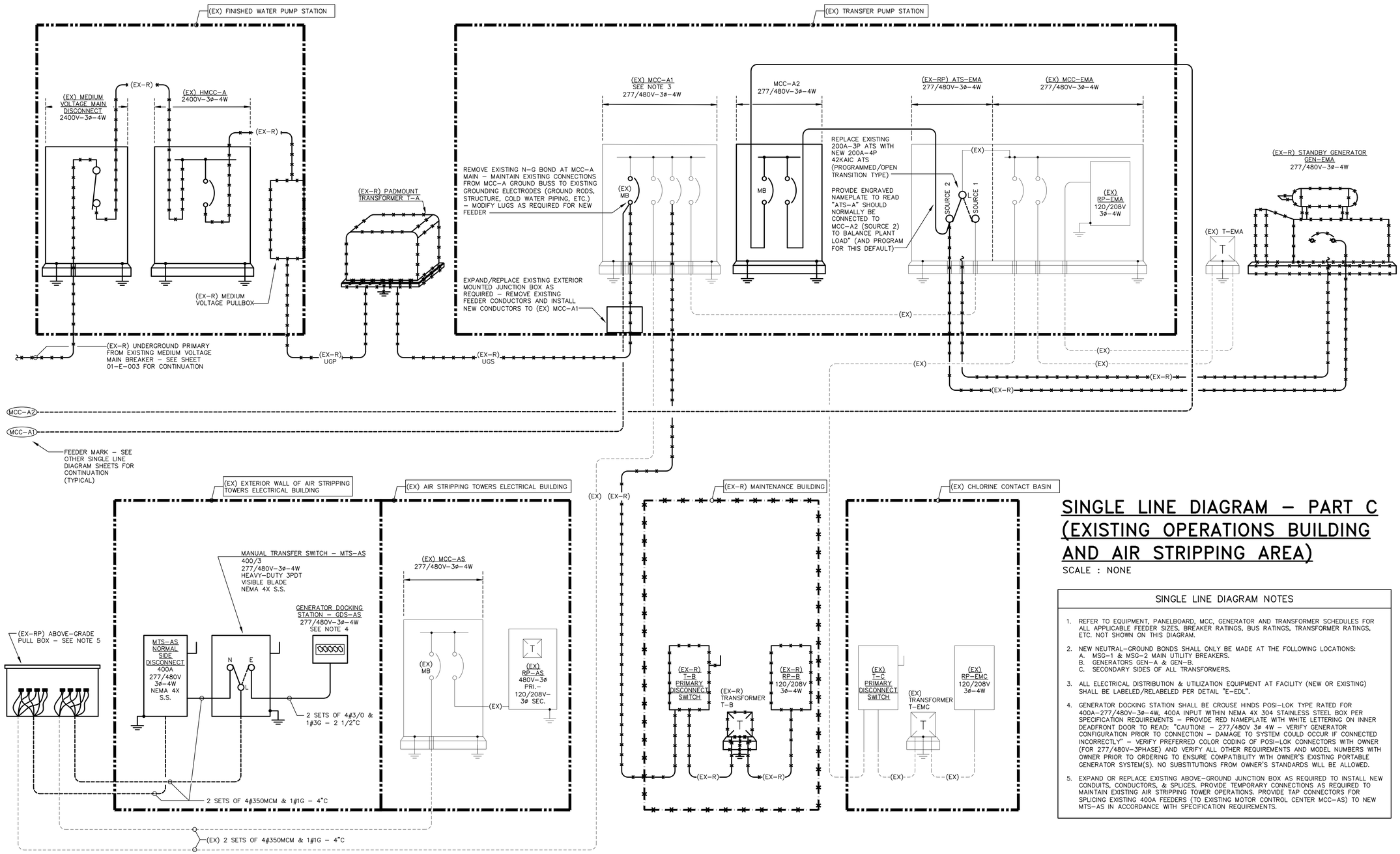

SINGLE LINE DIAGRAM – PART C (EXISTING OPERATIONS BUILDING AND AIR STRIPPING AREA)

SCALE : NONE

SINGLE LINE DIAGRAM NOTES

1. REFER TO EQUIPMENT, PANELBOARD, MCC, GENERATOR AND TRANSFORMER SCHEDULES FOR ALL APPLICABLE FEEDER SIZES, BREAKER RATINGS, BUS RATINGS, TRANSFORMER RATINGS, ETC. NOT SHOWN ON THIS DIAGRAM.
2. NEW NEUTRAL–GROUND BONDS SHALL ONLY BE MADE AT THE FOLLOWING LOCATIONS:
   A. MSG–1 & MSG–2 MAIN UTILITY BREAKERS.
   B. GENERATORS GEN–A & GEN–B.
   C. SECONDARY SIDES OF ALL TRANSFORMERS.
3. ALL ELECTRICAL DISTRIBUTION & UTILIZATION EQUIPMENT AT FACILITY (NEW OR EXISTING) SHALL BE LABELED/RELABELED PER DETAIL "E–EDL".
4. GENERATOR DOCKING STATION SHALL BE CROUSE HINDS POSI–LOK TYPE RATED FOR 400A–277/480V–3ø–4W, 400A INPUT WITHIN NEMA 4X 304 STAINLESS STEEL BOX PER SPECIFICATION REQUIREMENTS – PROVIDE RED NAMEPLATE WITH WHITE LETTERING ON INNER DEADFRONT DOOR TO READ: "CAUTION! – 277/480V 3ø 4W – VERIFY GENERATOR CONFIGURATION PRIOR TO CONNECTION – DAMAGE TO SYSTEM COULD OCCUR IF CONNECTED INCORRECTLY" – VERIFY PREFERRED COLOR CODING OF POSI–LOK CONNECTORS WITH OWNER (FOR 277/480V–3PHASE) AND VERIFY ALL OTHER REQUIREMENTS AND MODEL NUMBERS WITH OWNER PRIOR TO ORDERING TO ENSURE COMPATIBILITY WITH OWNER'S EXISTING PORTABLE GENERATOR SYSTEM(S). NO SUBSTITUTIONS FROM OWNER'S STANDARDS WILL BE ALLOWED.
5. EXPAND OR REPLACE EXISTING ABOVE–GROUND JUNCTION BOX AS REQUIRED TO INSTALL NEW CONDUITS, CONDUCTORS, & SPLICES. PROVIDE TEMPORARY CONNECTIONS AS REQUIRED TO MAINTAIN EXISTING AIR STRIPPING TOWER OPERATIONS. PROVIDE TAP CONNECTORS FOR SPLICING EXISTING 400A FEEDERS (TO EXISTING MOTOR CONTROL CENTER MCC–AS) TO NEW MTS–AS IN ACCORDANCE WITH SPECIFICATION REQUIREMENTS.

JACKSON, RENFRO & ASSOCIATES, INC.
ELECTRICAL ENGINEERING & DESIGN
141 VILLAGE STREET • SUITE 1 • BIRMINGHAM, ALABAMA • 35242
PHILIP D. BLACK, PE
phil@jraee.com
(D) 205.536.7120
(P) 205.995.1078
JRA JOB NO. 221201

ALABAMA LICENSED No. 27420 PROFESSIONAL ENGINEER PHILIP D. BLACK
9/18/2024

NO.	DATE	REVISION	BY	APVD
DSGN	ZJG	DR ZJG	CHK PDB	APVD PDB

REUSE OF DOCUMENTS: THIS DOCUMENT, AND THE IDEAS AND DESIGNS INCORPORATED HEREIN, AS AN INSTRUMENT OF PROFESSIONAL SERVICE, IS THE PROPERTY OF JACOBS AND IS NOT TO BE USED, IN WHOLE OR IN PART, FOR ANY OTHER PROJECT WITHOUT THE WRITTEN AUTHORIZATION OF JACOBS.

PAUL B. KREBS WATER TREATMENT PLANT IMPROVEMENTS
ANNISTON WATER WORKS & SEWER BOARD
CITY OF ANNISTON, ALABAMA

Jacobs

ELECTRICAL
SINGLE LINE DIAGRAM - PART C (EXISTING OPERATIONS BUILDING AND AIR STRIPPING AREA)

VERIFY SCALE
BAR IS ONE INCH ON ORIGINAL DRAWING.
0 1"

DATE	SEPTEMBER 2024
PROJ	D3698100
DWG	01-E-005
SHEET	113 of 145

BID DOCUMENTS

©JACOBS 2024. ALL RIGHTS RESERVED.

PLANT NETWORK DIAGRAMS LEGEND

FOPP — FIBER OPTIC PATCH PANEL – FURNISHED AND INSTALLED BY ASSOCIATED PANEL SUPPLIER PER FIBER OPTIC COMMUNICATION SYSTEM SPECIFICATIONS – WITH FIBER BREAKOUT KIT AND TERMINATIONS FOR ALL STRANDS AS REQUIRED.

IES — INDUSTRIAL MANAGED ETHERNET SWITCH – FURNISHED AND INSTALLED BY PANEL SUPPLIER WITHIN PLC ENCLOSURE – DIN-RAIL MOUNTABLE WITH RJ45 PORTS AND FIBER OPTIC PORTS AS REQUIRED FOR ALL SPECIFIED DROPS/CABLES – SEE SPECIFICATIONS.

PP — COPPER RJ45 CAT6 PATCH PANEL – FURNISHED AND INSTALLED BY PANEL/RACK SUPPLIER – WITH PORTS FOR ALL ETHERNET DROPS (DATA, SCADA, CCTV, ETC.) PLUS 50% SPARE CAPACITY.

EFMC — INDUSTRIAL GRADE ETHERNET FIBER MEDIA CONVERTER – DIN-RAIL MOUNTABLE WITH ONE (1) RJ45 PORT AND ONE (1) PAIR OF FIBER OPTIC PORTS AS REQUIRED FOR COMPLETE INITIAL INSTALLATION – PER INSTRUMENTATION AND CONTROL COMPONENTS SPECIFICATIONS – PROVIDE POWER FROM LOCAL C.P. AS REQUIRED.

PLC-* — PROGRAMMABLE LOGIC CONTROLLER (WITH ACCESSORIES AS REQUIRED) – PROVIDED BY SCADA INTEGRATOR OR EQUIPMENT SUPPLIER.

6F — FIBER OPTIC CABLE – 6-STRAND – SINGLE-MODE (9uM) OS2-RATED – INDOOR/OUTDOOR RATED PER FIBER OPTIC COMMUNICATION SYSTEM SPECIFICATION 40 95 80 – 2"C – NO CABLE SPLICES ALLOWED.

F — FIBER OPTIC PATCH CABLE – 2-STRAND – SINGLE-MODE (9uM) OS2-RATED – INDOOR/OUTDOOR RATED PER FIBER OPTIC COMMUNICATION SYSTEM SPECIFICATION 40 95 80.

D — CAT6 COPPER DATA CABLE – PER STRUCTURED CABLING SPECIFICATIONS – 1"C.

PLANT NETWORK DIAGRAMS NOTES

1. DIAGRAMS ARE NOT INTENDED TO SHOW ALL NETWORK CONNECTIONS AT FACILITY (TO NETWORKED POWER METERS, ETC.). REFER TO POINT LISTS, PLANS & SPECIFICATIONS FOR ADDITIONAL REQUIREMENTS.
2. CONTRACTOR SHALL VERIFY ALL SCADA-RELATED ITEMS (FIBER OPTIC & COPPER NETWORK INTERCONNECTIONS, ETC.) SHOWN ON THIS DIAGRAM WITH OWNER PRIOR TO INSTALLATION.
3. ALL NEW CAT6 COPPER & FIBER OPTIC CABLING SHALL BE INSTALLED BY A CERTIFIED STRUCTURED CABLING INSTALLER & TESTED IN ACCORDANCE WITH SPECIFICATION REQUIREMENTS. FURNISH TEST LOG AND LETTER OF CERTIFICATION WITH CLOSE-OUT DOCUMENTS.

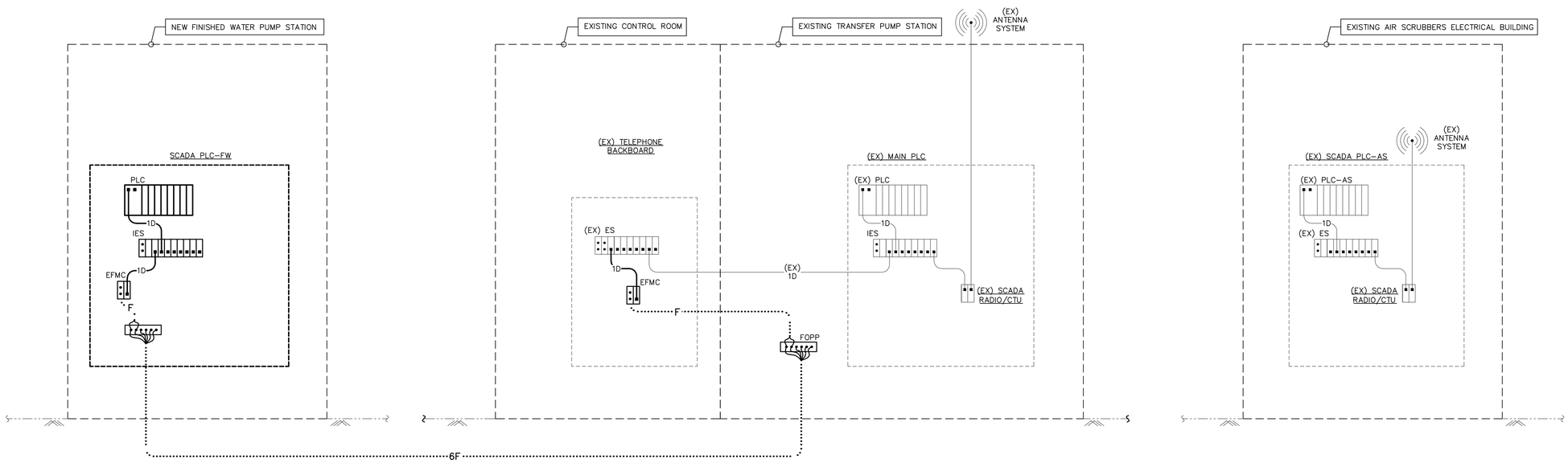

PLANT NETWORK DIAGRAM

SCALE : NONE

DIAGRAM NOTES

1. CONFIRM ALL NETWORK CONNECTION REQUIREMENTS WITH P&IDs AND I&C ENGINEER PRIOR TO COMMENCEMENT OF WORK.

JACKSON, RENFRO & ASSOCIATES, INC.
ELECTRICAL ENGINEERING & DESIGN
141 VILLAGE STREET • SUITE 1 • BIRMINGHAM, ALABAMA • 35242
PHILIP D. BLACK, PE
phil@jrae.com
(D) 205.536.7120
(P) 205.995.1078
JRA JOB NO. 221201

ALABAMA LICENSED No. 27420 PROFESSIONAL ENGINEER PHILIP D. BLACK
9/18/2024

NO.	DATE	REVISION	BY	APVD
DSGN	ZJG	DR	ZJG	CHK	APVD	PDB

PAUL B. KREBS WATER TREATMENT PLANT IMPROVEMENTS
ANNISTON WATER WORKS & SEWER BOARD
CITY OF ANNISTON, ALABAMA

Jacobs

ELECTRICAL
PLANT NETWORK DIAGRAM

REUSE OF DOCUMENTS: THIS DOCUMENT, AND THE IDEAS AND DESIGNS INCORPORATED HEREIN, AS AN INSTRUMENT OF PROFESSIONAL SERVICE, IS THE PROPERTY OF JACOBS AND IS NOT TO BE USED, IN WHOLE OR IN PART, FOR ANY OTHER PROJECT WITHOUT THE WRITTEN AUTHORIZATION OF JACOBS.

VERIFY SCALE
BAR IS ONE INCH ON ORIGINAL DRAWING.
0 — 1"

DATE	SEPTEMBER 2024
PROJ	D3698100
DWG	01-E-006
SHEET	114 of 145

BID DOCUMENTS

©JACOBS 2024. ALL RIGHTS RESERVED.

GENERATOR SCHEDULE - GEN-A

KW RATING:	2000KW / 2500KVA (MINIMUM)	SKVA RATING (AT 35%V. DIP):	
VOLTAGE:	277/480V-3P-4W	SOUND ATTENUATION:	CRITICAL SILENCER
FUEL TYPE:	DIESEL	LOCATION:	EXTERIOR

CIR. NO.	DESCRIPTION	VOLTS	P	HP	KW OR KVA	AMPS	BKR SIZE	SWITCH SIZE: SWITCH AMPS	SWITCH SIZE: F-TRON AMPS	WIRE AND COND. SIZE
1	MSG-GEN FEEDER	277/480	3		1,770.5		4000/3			SEE MSG-GEN SCHEDULE

TOTAL CONNECTED LOAD:	2,264.3	KVA
	2,830.4	AMPS
TOTAL DEMAND LOAD:	1,764.5	KVA
	2,205.7	AMPS
TOTAL COMPUTED LOAD:	1,770.5	KVA
	2,213.1	AMPS

NOTES:
1. ANY BREAKER RATED 1200A OR GREATER SHALL BE PROVIDED WITH ARC-FLASH REDUCTION MAINTENANCE SWITCH PER NEC 240.87.
2. GENERATOR MAIN BREAKER SHALL BE ELECTRONIC LSI TYPE.
3. GENERATOR BREAKER SHALL INDICATE GROUND FAULTS BUT NOT TRIP UNDER GROUND FAULTS.
4. SEE GENERATOR MINIMUM SIZING REQUIREMENTS.

GENERATOR SCHEDULE - GEN-B

KW RATING:	2000KW / 2500KVA (MINIMUM)	SKVA RATING (AT 35%V. DIP):	
VOLTAGE:	277/480V-3P-4W	SOUND ATTENUATION:	CRITICAL SILENCER
FUEL TYPE:	DIESEL	LOCATION:	EXTERIOR

CIR. NO.	DESCRIPTION	VOLTS	P	HP	KW OR KVA	AMPS	BKR SIZE	SWITCH SIZE: SWITCH AMPS	SWITCH SIZE: F-TRON AMPS	WIRE AND COND. SIZE
1	MSG-GEN FEEDER	277/480	3		1,770.5		4000/3			SEE MSG-GEN SCHEDULE

TOTAL CONNECTED LOAD:	2,264.3	KVA
	2,830.4	AMPS
TOTAL DEMAND LOAD:	1,764.5	KVA
	2,205.7	AMPS
TOTAL COMPUTED LOAD:	1,770.5	KVA
	2,213.1	AMPS

NOTES:
1. ANY BREAKER RATED 1200A OR GREATER SHALL BE PROVIDED WITH ARC-FLASH REDUCTION MAINTENANCE SWITCH PER NEC 240.87.
2. GENERATOR MAIN BREAKER SHALL BE ELECTRONIC LSI TYPE.
3. GENERATOR BREAKER SHALL INDICATE GROUND FAULTS BUT NOT TRIP UNDER GROUND FAULTS.
4. SEE GENERATOR MINIMUM SIZING REQUIREMENTS.

GENERATOR MINIMUM SIZING REQUIREMENTS

1. THE GENERATOR SUPPLIER SHALL SUBMIT A SIZING REPORT SHOWING THAT THE GENERATOR SYSTEM VOLTAGE DIP WILL BE LESS THAN 20% FREQUENCY DIP WILL BE LESS THAN 10%, AND RESULTING THDV WILL BE LESS THAN 8%, WITH ALL GENERATORS RUNNING WHEN STARTING/RUNNING THE FOLLOWING LOADS:
   - STEP 1: 500KVA OF BALANCED 3ø BLOCK LOAD
   - STEP 2: 500KVA OF BALANCED 3ø BLOCK LOAD
   - STEP 3: (1) 700HP PUMP MOTOR WITH RVSS WITH 400% CURRENT LIMIT
     (1) 150HP PUMP MOTOR WITH RVSS WITH 400% CURRENT LIMIT
   - STEP 4: (1) 700HP PUMP MOTOR WITH RVSS WITH 400% CURRENT LIMIT
   - STEP 5: (1) 700HP PUMP MOTOR WITH RVSS WITH 400% CURRENT LIMIT
   - STEP 6: (1) 700HP PUMP MOTOR WITH RVSS WITH 400% CURRENT LIMIT
2. GENERATOR KW & ALTERNATOR SIZES/TYPES SHALL BE PROVIDED BY MANUFACTURER AS REQUIRED TO SATISFY THESE MINIMUM REQUIREMENTS.

AUTOMATIC TRANSFER SWITCH SCHEDULE - ATS-B

KAIC / WCR RATING:	85KAIC (MINIMUM)	NORMAL FED FROM:	MCC-B1
VOLTAGE:	277/480V-3P-4W	NORMAL FEEDER:	SEE MOTOR CONTROL CENTER SCHEDULE - MCC-B1
AMP RATING:	200 AMP	EMERGENCY FED FROM:	MCC-B2
LOCATION:	FWPS ELECTRICAL ROOM	EMEGENCY FEEDER:	SEE MOTOR CONTROL CENTER SCHEDULE - MCC-B2

LOAD SIDE FEEDER DESCRIPTION	VOLTS	P	HP	KW OR KVA	AMPS	WIRE AND COND. SIZE
LP-B	277/480	3		64.6		4#3/0 & 1#6G - 2 1/2"C

EMERGENCY		NORMAL
59.0 KVA	TOTAL CONNECTED LOAD	59.0 KVA
73.7 AMPS		73.7 AMPS
59.0 KVA	TOTAL DEMAND LOAD:	59.0 KVA
73.7 AMPS		73.7 AMPS
64.6 KVA	TOTAL COMPUTED LOAD	64.6 KVA
80.7 AMPS		80.7 AMPS

NOTES:
1. ATS SHALL BE 4-POLE.

JACKSON, RENFRO & ASSOCIATES, INC.
ELECTRICAL ENGINEERING & DESIGN
141 VILLAGE STREET • SUITE 1 • BIRMINGHAM, ALABAMA • 35242
PHILIP D. BLACK, PE
phil@jraee.com
(D) 205.536.7120
(P) 205.995.1078
JRA JOB NO. 221201

ALABAMA LICENSED No. 27420 PROFESSIONAL ENGINEER PHILIP D. BLACK
9/18/2024

NO.	DATE	REVISION	BY	APVD
DSGN	ZJG	DR ZJG	CHK PDB	APVD PDB

PAUL B. KREBS WATER TREATMENT PLANT
IMPROVEMENTS
ANNISTON WATER WORKS & SEWER BOARD
CITY OF ANNISTON, ALABAMA

Jacobs

ELECTRICAL
ELECTRICAL SCHEDULES

REUSE OF DOCUMENTS: THIS DOCUMENT, AND THE IDEAS AND DESIGNS INCORPORATED HEREIN, AS AN INSTRUMENT OF PROFESSIONAL SERVICE, IS THE PROPERTY OF JACOBS AND IS NOT TO BE USED, IN WHOLE OR IN PART, FOR ANY OTHER PROJECT WITHOUT THE WRITTEN AUTHORIZATION OF JACOBS.

VERIFY SCALE
BAR IS ONE INCH ON ORIGINAL DRAWING:
0 1"

DATE	SEPTEMBER 2024
PROJ	D3698100
DWG	01-E-011
SHEET	115 of 145

BID DOCUMENTS

©JACOBS 2024. ALL RIGHTS RESERVED.

MAIN PARALLELING SWITCHGEAR SCHEDULE - MSG-1

PANEL TYPE:	SEE SPECIFICATION SECTION 26 23 00	AIC RATING:	125KAIC (MINIMUM)
VOLTAGE:	277/480V-3P-4W	MOUNTING:	FREESTANDING
AMPS & TYPE:	5000/4 MAIN BKR	LOCATION:	FINISHED WATER PUMP STATION ELECTRICAL ROOM
FED FROM:	UTILITY (PADMOUNT SVC XFMR NO. 1)	FEEDER:	14 SETS OF 4-500MCM & 1-500MCMG - 4"C

CIR. NO.	DESCRIPTION	VOLTS	P	HP	KW OR KVA	AMPS	BKR SIZE	LOCAL SAFETY SW. RATING	WIRE AND COND. SIZE	REMARKS
D1-1	SPACE	277/480					-/	-		
D1-2	MCC-A1	277/480	3		411.1		1200/3	-	4 SETS OF 4-350MCM & 1#3/0G - 3 1/2"C	ELEC. TRIP LSIG TYPE - SEE NOTE 6
D1-3	FINISHED WATER PUMP NO. 1 RVSS	480	3	700			1200/3	-	3 SETS OF 3-500MCM & 1#4/0G - 4"C AND (1) SPARE 4"E.C.	ELEC. TRIP LSIG TYPE
D1-4	FINISHED WATER PUMP NO. 3 RVSS	480	3	700			1200/3	-	3 SETS OF 3-500MCM & 1#4/0G - 4"C AND (1) SPARE 4"E.C.	ELEC. TRIP LSIG TYPE
D1-5	SPACE	277/480	3				-/3	-		
D1-6	MCC-B1	277/480	3		170.3		400/3	-	2 SETS OF 4#3/0 & 1#3G - 2 1/2"C	ELEC. TRIP LSIG TYPE
D1-7	FINISHED WATER PUMP NO. 5 RVSS	480	3	700			1200/3	-	3 SETS OF 3-500MCM & 1#4/0G - 4"C AND (1) SPARE 4"E.C.	ELEC. TRIP LSIG TYPE
D1-8	SPARE BREAKER FOR FUTURE 2 MGD PUMP NO. 7 RVSS	480	3	150			400/3	-	(1) 4"E.C..	ELEC. TRIP LSIG TYPE
		TOTAL CONNECTED LOAD:				2,699.1 KVA			TOTAL CONNECTED LOAD:	4,528.7 KVA
						3,373.9 AMPS			(WITH MSG-2 OUT OF SERVICE)	5,660.9 AMPS
		TOTAL DEMAND LOAD:				2699.1 KVA			TOTAL DEMAND LOAD:	3,529.1 KVA
						3,373.9 AMPS			(WITH MSG-2 OUT OF SERVICE)	4,411.4 AMPS
		TOTAL COMPUTED LOAD:				2707.8 KVA			TOTAL COMPUTED LOAD:	3,540.9 KVA
						3,384.8 AMPS			(WITH MSG-2 OUT OF SERVICE)	4,426.2 AMPS

NOTES:
1. ANY BREAKER RATED 1200A OR GREATER SHALL BE PROVIDED WITH ARC-FLASH REDUCTION MAINTENANCE SWITCH PER NEC 240.87.
2. ENCLOSURE DIMENSIONS SHALL NOT EXCEED THOSE SHOWN ON PLANS.
3. SWITCHGEAR SHALL BE SERVICE-ENTRANCE RATED.
4. SWITCHGEAR SHALL BE FRONT AND REAR ACCESSIBLE ONLY (NO SIDE ACCESS). ENCLOSURE DIMENSIONS SHALL NOT EXCEED THOSE SHOWN ON PLANS.
5. PROVIDE MODIFIED DIFFERENTIAL GROUND FAULT SYSTEM FOR UTILITY MAIN & GENERATOR MAIN BREAKERS
6. CONTRACTOR/SUPPLIER SHALL EITHER SERIES RATE THE DOWNSTREAM MCC-A1 WITH THIS BREAKER AS REQUIRED TO NOT EXCEED THE EXISTING KAIC RATING OF MCC-A1 & MCC-EMA (THIS BREAKER SHALL BE PART OF A TESTED COMBINATION WITH THE DOWNSTREAM EQUIPMENT), OR SHALL PROVIDE OTHER EQUIVALENT MEASURE/EQUIPMENT TO ENSURE THAT THE EXISTING FAULT CURRENT/KAIC RATING(S) OF THE DOWNSTREAM EQUIOPMENT ARE NOT EXCEEDED.

MAIN PARALLELING SWITCHGEAR SCHEDULE - MSG-2

PANEL TYPE:	SEE SPECIFICATION SECTION 26 23 00	AIC RATING:	125KAIC (MINIMUM)
VOLTAGE:	277/480V-3P-4W	MOUNTING:	FREESTANDING
AMPS & TYPE:	5000/4 MAIN BKR	LOCATION:	FINISHED WATER PUMP STATION ELECTRICAL ROOM
FED FROM:	UTILITY (PADMOUNT SVC XFMR NO. 2)	FEEDER:	14 SETS OF 4-500MCM & 1-500MCMG - 4"C

CIR. NO.	DESCRIPTION	VOLTS	P	HP	KW OR KVA	AMPS	BKR SIZE	LOCAL SAFETY SW. RATING	WIRE AND COND. SIZE	REMARKS
D2-1	SPACE	277/480	3				-/3	-		
D2-2	MCC-A2	277/480	3		394.5		1000/3	-	3 SETS OF 4-400MCM & 1#2/0G - 3 1/2"C	ELEC. TRIP LSIG TYPE
D2-3	FINISHED WATER PUMP NO. 2 RVSS	480	3	700			1200/3	-	3 SETS OF 3-500MCM & 1#4/0G - 4"C AND (1) SPARE 4"E.C.	ELEC. TRIP LSIG TYPE
D2-4	FINISHED WATER PUMP NO. 4 RVSS	480	3	700			1200/3	-	3 SETS OF 3-500MCM & 1#4/0G - 4"C AND (1) SPARE 4"E.C.	ELEC. TRIP LSIG TYPE
D2-5	SPACE	277/480	3				-/3	-		
D2-6	MCC-B2	277/480	3		128.3		400/3	-	2 SETS OF 4#3/0 & 1#3G - 2 1/2"C	ELEC. TRIP LSIG TYPE
D2-7	SPARE BREAKER FOR FUTURE 2 MGD PUMP NO. 6 RVSS	480	3	150			400/3	-	(1) 4"E.C..	ELEC. TRIP LSIG TYPE
D2-8	SPACE	277/480					-/	-		
		TOTAL CONNECTED LOAD:				1,979.7 KVA			TOTAL CONNECTED LOAD:	3,723.9 KVA
						2,474.6 AMPS			(WITH MSG-1 OUT OF SERVICE)	4,654.9 AMPS
		TOTAL DEMAND LOAD:				1979.7 KVA			TOTAL DEMAND LOAD:	3,529.1 KVA
						2,474.6 AMPS			(WITH MSG-1 OUT OF SERVICE)	4,411.4 AMPS
		TOTAL COMPUTED LOAD:				1988.4 KVA			TOTAL COMPUTED LOAD:	3,540.9 KVA
						2,485.5 AMPS			(WITH MSG-1 OUT OF SERVICE)	4,426.2 AMPS

NOTES:
1. ANY BREAKER RATED 1200A OR GREATER SHALL BE PROVIDED WITH ARC-FLASH REDUCTION MAINTENANCE SWITCH PER NEC 240.87.
2. ENCLOSURE DIMENSIONS SHALL NOT EXCEED THOSE SHOWN ON PLANS.
3. SWITCHGEAR SHALL BE SERVICE-ENTRANCE RATED.
4. SWITCHGEAR SHALL BE FRONT AND REAR ACCESSIBLE ONLY (NO SIDE ACCESS). ENCLOSURE DIMENSIONS SHALL NOT EXCEED THOSE SHOWN ON PLANS.
5. PROVIDE MODIFIED DIFFERENTIAL GROUND FAULT SYSTEM FOR UTILITY MAIN & GENERATOR MAIN BREAKERS

MAIN PARALLELING SWITCHGEAR SCHEDULE - MSG-GEN

PANEL TYPE:	SEE SPECIFICATION SECTION 26 23 00	AIC RATING:	125KAIC (MINIMUM)
VOLTAGE:	277/480V-3P-4W	MOUNTING:	FREESTANDING
AMPS & TYPE:	5000 AMP	LOCATION:	FINISHED WATER PUMP STATION ELECTRICAL ROOM

CIR. NO.	DESCRIPTION	VOLTS	P	HP	KW OR KVA	AMPS	BKR SIZE	LOCAL SAFETY SW. RATING	WIRE AND COND. SIZE	REMARKS
GM1	GMAIN-1	277/480	3		2,707.8		5000/4	-		ELEC TRIP LSI TYPE (NOT GROUND FAULT)
GA	GENERATOR GEN-A BREAKER (GA)	277/480	3				4000/3	-	11 SETS OF 4-500MCM & 1-500MCMG - 4"C	ELEC TRIP LSI TYPE (NOT GROUND FAULT)
GB	GENERATOR GEN-B BREAKER (GB)	277/480	3				4000/3	-	11 SETS OF 4-500MCM & 1-500MCMG - 4"C	ELEC TRIP LSI TYPE (NOT GROUND FAULT)
GM2	GMAIN-2	277/480	3		1,988.4		5000/4	-		ELEC TRIP LSI TYPE (NOT GROUND FAULT)
		TOTAL CONNECTED LOAD:				4,528.7 KVA				
						5,660.9 AMPS				
		TOTAL DEMAND LOAD:				3,529.1 KVA				
						4,411.4 AMPS				
		TOTAL COMPUTED LOAD:				3,540.9 KVA				
						4,426.2 AMPS				

NOTES:
1. ANY BREAKER RATED 1200A OR GREATER SHALL BE PROVIDED WITH ARC-FLASH REDUCTION MAINTENANCE SWITCH PER NEC 240.87.
2. ENCLOSURE DIMENSIONS SHALL NOT EXCEED THOSE SHOWN ON PLANS.
3. SWITCHGEAR SHALL BE FRONT AND REAR ACCESSIBLE ONLY (NO SIDE ACCESS). ENCLOSURE DIMENSIONS SHALL NOT EXCEED THOSE SHOWN ON PLANS.
4. PROVIDE MODIFIED DIFFERENTIAL GROUND FAULT SYSTEM FOR UTILITY MAIN & GENERATOR MAIN BREAKERS

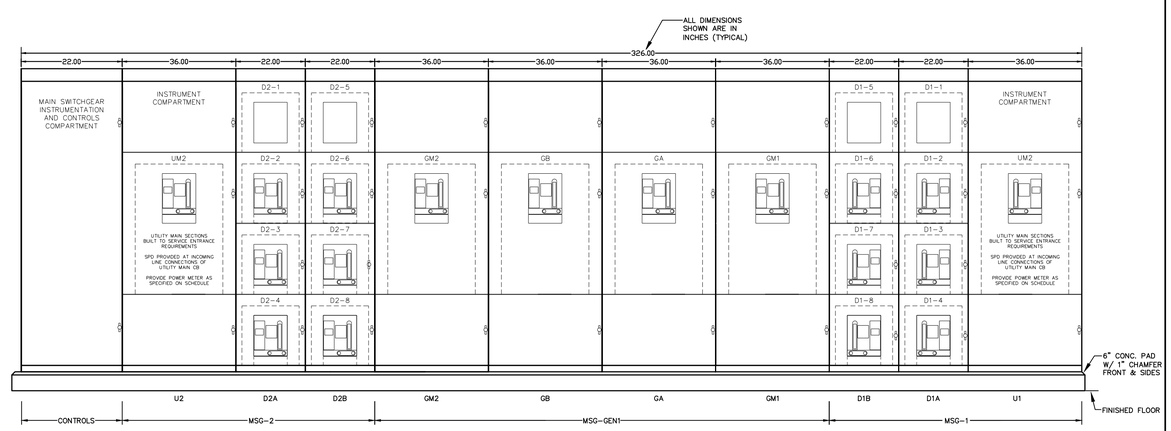

MAIN SWITCHGEAR ELEVATION

SCALE : 1/2" = 1'-0"

ELEVATION NOTES

1. EQUIPMENT DEPTH FOR ALL POWER SECTIONS (NOT INCLUDING INSTRUMENTATION AND CONTROLS COMPARTMENT) SHALL BE 76".
2. GEAR SHALL NOT EXCEED THE DIMENSIONS SHOWN HEREIN OR ON THE PLANS WITHOUT SPECIFIC WRITTEN PERMISSION BY THE ENGINEER.

JACKSON, RENFRO & ASSOCIATES, INC.
ELECTRICAL ENGINEERING & DESIGN
141 VILLAGE STREET • SUITE I • BIRMINGHAM, ALABAMA • 35242
PHILIP D. BLACK, PE
phil@jraee.com
(D) 205.536.7120
(P) 205.995.1078
JRA JOB NO. 221201

ALABAMA LICENSED No. 27420 PROFESSIONAL ENGINEER PHILIP D. BLACK
9/18/2024

NO.	DATE	REVISION	BY	APVD
DSGN	ZJG	DR ZJG	CHK PDB	APVD PDB

PAUL B. KREBS WATER TREATMENT PLANT IMPROVEMENTS
ANNISTON WATER WORKS & SEWER BOARD
CITY OF ANNISTON, ALABAMA

REUSE OF DOCUMENTS: THIS DOCUMENT, AND THE IDEAS AND DESIGNS INCORPORATED HEREIN, AS AN INSTRUMENT OF PROFESSIONAL SERVICE, IS THE PROPERTY OF JACOBS AND IS NOT TO BE USED, IN WHOLE OR IN PART, FOR ANY OTHER PROJECT WITHOUT THE WRITTEN AUTHORIZATION OF JACOBS.

Jacobs

ELECTRICAL
ELECTRICAL SCHEDULES

VERIFY SCALE
BAR IS ONE INCH ON ORIGINAL DRAWING.
0 1"

DATE	SEPTEMBER 2024
PROJ	D3698100
DWG	01-E-012
SHEET	116 of 145

BID DOCUMENTS

©JACOBS 2024. ALL RIGHTS RESERVED.

EXISTING MOTOR CONTROL CENTER SCHEDULE - MCC-A1

MCC TYPE:	SQUARE 'D' MODEL 6 MCC	AIC RATING:	25KAIC (MINIMUM) (EXISTING)
VOLTAGE:	277/480V-3P-4W	LOCATION:	TRANSFER PUMP STATION
MAIN AMPS:	1600/3 MAIN BREAKER (EXISTING)	REMARKS:	
FED FROM:	MSG-1	FEEDER:	SEE MAIN PARALLELING SWITCHGEAR SCHEDULE - MSG-1

UNIT NO.	NAMEPLATE DESCRIPTION	MCC UNIT TYPE	ELECT. EQUIP. CHARACTERISTICS					STARTER NEMA OR AMPERAGE RATING	CIR. BKR. OR MCP	ELEM. DIAG. NO.	LOCAL SAFETY SWITCH RATING	WIRE AND COND. SIZE	REMARKS
			V	P	HP	KW OR KVA	AMPS						
1 A	(EX) POWER METER	EXISTING POWER METER	277/480	3							-	2 SETS OF 4-350MCM & 1#1G - 3"C	EXISTING
1 E	(EX) MAIN BREAKER	SEE ABOVE	277/480	3							-	EXISTING	
1 O	(EX) SPACE	EXISTING	277/480	3							-	EXISTING	
2 A	(EX) TRANSFER PUMP NO. 1	EXISTING 150HP RVSS	480	3	150						-	EXISTING	
3 A	**SPARE**	**EXISTING 150HP RVSS**	**480**	**3**							**-**		**ORIGINAL LABEL "TRANSFER PUMP NO. 2" - SEE NOTE 1**
4 A	(EX) TRANSFER PUMP NO. 3	EXISTING 150HP RVSS	480	3	150						-	EXISTING	
5 A	**SPARE**	**EXISTING 150HP RVSS**	**480**	**3**							**-**		**ORIGINAL LABEL "TRANSFER PUMP NO. 4" - SEE NOTE 1**
6 A	(EX) SURGE PROTECTION DEVICE	(EX) SURGE PROTECTION DEVICE	277/480	3							-		
6 C-L	(EX) DISC SCREEN NO. 1	EXISTING 30/3 BREAKER	480	3	7 1/2						-	EXISTING	
6 C-R	**SPARE**	**EXISTING 30/3 BREAKER**	**480**	**3**							**-**		**ORIGINAL LABEL "DISC SCREEN NO. 2" - SEE NOTE 2**
6 G-L	(EX) DISC SCREEN NO. 3	EXISTING 30/3 BREAKER	480	3	7 1/2						-	EXISTING	
6 G-R	**SPARE**	**EXISTING BREAKER**	**480**	**3**							**-**		**ORIGINAL LABEL "TRANSFORMER T-B" - SEE NOTE 1**
6 K	(EX) SPACE	EXISTING	277/480	3							-		
6 O	(EX) SPACE	EXISTING	277/480	3							-		
6 P	(EX) MCC-AS FEEDER BREAKER	EXISTING 400/3 BREAKER	277/480	3		157.3					-	EXISTING	
7 A-L	(EX) PUMP ROOM BRIDGE CRANE	EXISTING BREAKER	480	3	3						-	EXISTING	
7 A-R	(EX) CHLORINE ROOM MONORAIL	EXISTING BREAKER	480	3	3						-	EXISTING	
7 E	(EX) SUPPLY FAN SF-1	EXISTING COMBINATION FVNR STARTER	480	3	3			NEMA 1			-	EXISTING	
7 I	**SPARE**	**EXISTING COMBINATION FVNR STARTER**	**480**	**3**				**NEMA 1**			**-**		**ORIGINAL LABEL "SUPPLY FAN SF-2" - SEE NOTE 2**
7 M	(EX) EXHAUST FAN EF-1	EXISTING COMBINATION FVNR STARTER	480	3	1/2			NEMA 1			-	EXISTING	
7 Q	**SPARE**	**EXISTING COMBINATION FVNR STARTER**	**480**	**3**				**NEMA 1**			**-**		**ORIGINAL LABEL "EXHAUST FAN EF-2" - SEE NOTE 2**
7 U	(EX) SPACE	EXISTING	277/480	3							-		
8 A	**SPARE**	**EXISTING COMBINATION FVNR STARTER**	**480**	**3**				**NEMA 1**			**-**		**ORIGINAL LABEL "EXHAUST FAN EF-8" - SEE NOTE 2**
8 E	(EX) EXHAUST FAN EF-9	EXISTING COMBINATION FVNR STARTER	480	3	1/2			NEMA 1			-	EXISTING	
8 I	**SPARE**	**EXISTING COMBINATION FVNR STARTER**	**480**	**3**				**NEMA 1**			**-**		**ORIGINAL LABEL "EXHAUST FAN EF-10" - SEE NOTE 2**
8 M	(EX) EXHAUST FAN EF-11	EXISTING COMBINATION FVNR STARTER	480	3	1/2						-	EXISTING	
8 Q	(EX) WIRING DIAGRAMS STORAGE	EXISTING STORAGE SPACE									-		
8 S	ATS-EMA	EXISTING 200/3 BREAKER	277/480	3							-	EXISTING	
9 A	(EX) SPACE	EXISTING	277/480	3							-		
9 E	(EX) SPACE	EXISTING	277/480	3							-		
9 I	(EX) SPACE	EXISTING	277/480	3							-		
9 M	(EX) SPACE	EXISTING	277/480	3							-		
9 Q	(EX) SPACE	EXISTING	277/480	3							-		
9 U	(EX) SPACE	EXISTING	277/480	3							-		

NOTES:

1. DEMOLISH ALL EXISTING FIELD WIRING AS INDICATED ON PLANS. MAINTAIN EXISTING EQUIPMENT/DEVICES WITHIN UNIT OR ON UNIT DOOR UNLESS NOTED OTHERWISE - PROVIDE NEW ENGRAVED NAMEPLATE AS NOTED.
2. INDICATED EXISTING UNITS SHALL BE REPLACED WITH NEW UNITS IN NEW MCC-A2. EXTEND & RECONNECT EXISTING FIELD CIRCUITRY/CONDUITS TO NEW UNITS IN MCC-A2 AS REQUIRED. PROVIDE NEW ENGRAVED NAMEPLATE PER DETAIL "E-EDL"

MODIFIED SECTION(S)/UNITS WITHIN EXISTING MCC'S ARE SHOWN UNSHADED – FIELD–COORDINATE EXACT UNIT LOCATION & ALL REQUIREMENTS PRIOR TO BID (TYPICAL)

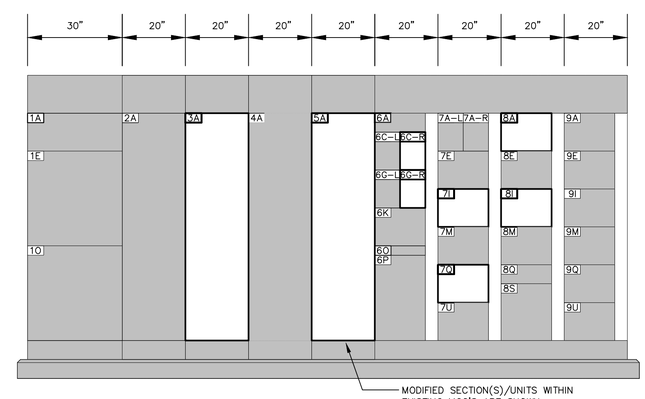

EXISTING MCC–A1 (ORIGINAL LABEL "MCC–A") ELEVATION

SCALE : 1/2" = 1'–0"

JACKSON, RENFRO & ASSOCIATES, INC.
ELECTRICAL ENGINEERING & DESIGN
141 VILLAGE STREET • SUITE 1 • BIRMINGHAM, ALABAMA • 35242
PHILIP D. BLACK, PE
phil@jraee.com
(D) 205.536.7120
(P) 205.995.1078
JRA JOB NO. 221201

ALABAMA LICENSED No. 27420 PROFESSIONAL ENGINEER PHILIP D. BLACK

9/18/2024

NO.	DATE	REVISION	BY	APVD

DSGN ZJG | DR ZJG | CHK PDB | APVD PDB

PAUL B. KREBS WATER TREATMENT PLANT IMPROVEMENTS
ANNISTON WATER WORKS & SEWER BOARD
CITY OF ANNISTON, ALABAMA

REUSE OF DOCUMENTS: THIS DOCUMENT, AND THE IDEAS AND DESIGNS INCORPORATED HEREIN, AS AN INSTRUMENT OF PROFESSIONAL SERVICE, IS THE PROPERTY OF JACOBS AND IS NOT TO BE USED, IN WHOLE OR IN PART, FOR ANY OTHER PROJECT WITHOUT THE WRITTEN AUTHORIZATION OF JACOBS.

Jacobs

ELECTRICAL
ELECTRICAL SCHEDULES

VERIFY SCALE
BAR IS ONE INCH ON ORIGINAL DRAWING.
0 1"

DATE	SEPTEMBER 2024
PROJ	D3698100
DWG	01-E-013
SHEET	117 of 145

BID DOCUMENTS

©JACOBS 2024. ALL RIGHTS RESERVED.

MOTOR CONTROL CENTER SCHEDULE - MCC-A2

MCC TYPE:	SQUARE 'D' MODEL 6 MCC	AIC RATING:	42KAIC (MINIMUM)
VOLTAGE:	277/480V-3P-4W	LOCATION:	TRANSFER PUMP STATION
MAIN AMPS:	1000/3 MAIN BKR (ELEC TRIP LSIG TYPE)	REMARKS:	
FED FROM:	MSG-2	FEEDER:	SEE MAIN PARALLELING SWITCHGEAR SCHEDULE - MSG-2

UNIT NO.	NAMEPLATE DESCRIPTION	MCC UNIT TYPE	ELECT. EQUIP. CHARACTERISTICS					STARTER NEMA OR AMPERAGE RATING	CIR. BKR. OR MCP	ELEM DIAG. NO.	LOCAL SAFETY SWITCH RATING	WIRE AND COND. SIZE	REMARKS
			V	P	HP	KW OR KVA	AMPS						
1 A	MAIN BREAKER	SEE ABOVE	277/480	3							-		
1 M	MCC SURGE PROTECTION DEVICE	240KA (PER PHASE) SURGE PROTECTION DEVICE	277/480	3							-		
1 Q	MCC POWER METER	SQUARE D #PM5563 WITH DOOR-MOUNTED DISPLAY AND ETHERNET COMMUNICATION CARD	277/480	3							-		
1 U	SPACE	PROVISIONS FOR FUTURE PLUG-ON UNITS	277/480	3					-/3		-		
2 A	TRANSFER PUMP NO. 2	COMBINATION RVSS STARTER WITH MCP, LINE SIDE SURGE PROTECTION, AND SHORTING CONTACTOR	480	3	150			180 AMPS	MCP PER MANUF.	4	-	3#4/0 & 1#2G - 2 1/2"C	ALTISTART 48 FRAME C 21 OR EQUIVALENT
3 A	TRANSFER PUMP NO. 4	COMBINATION RVSS STARTER WITH MCP, LINE SIDE SURGE PROTECTION, AND SHORTING CONTACTOR	480	3	150			180 AMPS	MCP PER MANUF.	4	-	3#4/0 & 1#2G - 2 1/2"C	ALTISTART 48 FRAME C 21 OR EQUIVALENT
4 A	DISC SCREEN NO. 2	COMPACT BREAKER	480	3	7 1/2				30/3		-	3#10 & 1#10G - 3/4"C	SEE NOTE 1
4 E	SUPPLY FAN SF-2	COMBINATION FVNR STARTER WITH MCP	480	3	3			NEMA 1	MCP PER MANUF.	5	-	3#12 & 1#12G - 3/4"C	SEE NOTE 1
4 I	EXHAUST FAN EF-2	COMBINATION FVNR STARTER WITH MCP	480	3	1/2			NEMA 1	MCP PER MANUF.	5	-	3#12 & 1#12G - 3/4"C	SEE NOTE 1
4 M	EXHAUST FAN EF-8	COMBINATION FVNR STARTER WITH MCP	480	3	1/2			NEMA 1	MCP PER MANUF.	5	-	3#12 & 1#12G - 3/4"C	SEE NOTE 1
4 Q	EXHAUST FAN EF-10	COMBINATION FVNR STARTER WITH MCP	480	3	1/2			NEMA 1	MCP PER MANUF.	5	-	3#12 & 1#12G - 3/4"C	SEE NOTE 1
5 A	ATS-EMA	150/3 BREAKER	277/480	3		91.1			150/3		-	4#1/0 & 1#6G - 2"C	
5 E	SPACE	PROVISIONS FOR FUTURE PLUG-ON UNITS	277/480	3					-/3		-		

TOTAL CONNECTED LOAD:	394.5 KVA	
	493.1 AMPS	
TOTAL DEMAND LOAD:	394.5 KVA	
	493.1 AMPS	
TOTAL COMPUTED LOAD:	394.5 KVA	
	493.1 AMPS	

NOTES:

1. CIRCUITRY FOR INDICATED UNITS SHALL BE EXTEDED/CONNECTED/SPLICED TO EXISTING FIELD CIRCUITRY WITHIN NEW J-BOXES ON WALL ABOVE EXISTING MCC AS INDICATED ON PLANS (WHERE ASSOCIATED LOAD WAS PREVIOUSLY FED FROM) WHERE POSSIBLE.

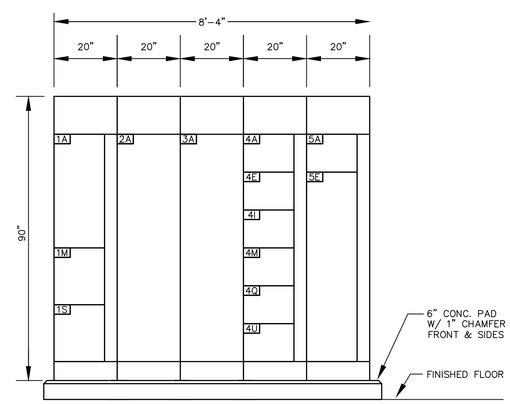

MCC-A2 ELEVATION

SCALE : 1/2" = 1'-0"

JACKSON, RENFRO & ASSOCIATES, INC.
ELECTRICAL ENGINEERING & DESIGN
141 VILLAGE STREET • SUITE 1 • BIRMINGHAM, ALABAMA • 35242
PHILIP D. BLACK, PE
phil@jraee.com
(D) 205.536.7120
(P) 205.995.1078
JRA JOB NO. 221201

ALABAMA LICENSED No. 27420 PROFESSIONAL ENGINEER PHILIP D. BLACK
9/18/2024

NO.	DATE	REVISION	BY	APVD

DSGN	DR	CHK	APVD
ZJG	ZJG	PDB	PDB

PAUL B. KREBS WATER TREATMENT PLANT
IMPROVEMENTS
ANNISTON WATER WORKS & SEWER BOARD
CITY OF ANNISTON, ALABAMA

REUSE OF DOCUMENTS: THIS DOCUMENT, AND THE IDEAS AND DESIGNS INCORPORATED HEREIN, AS AN INSTRUMENT OF PROFESSIONAL SERVICE, IS THE PROPERTY OF JACOBS AND IS NOT TO BE USED, IN WHOLE OR IN PART, FOR ANY OTHER PROJECT WITHOUT THE WRITTEN AUTHORIZATION OF JACOBS.

Jacobs

ELECTRICAL
ELECTRICAL SCHEDULES

VERIFY SCALE
BAR IS ONE INCH ON ORIGINAL DRAWING.
0 1"

DATE	SEPTEMBER 2024
PROJ	D3698100
DWG	01-E-014
SHEET	118 of 145

BID DOCUMENTS

©JACOBS 2024. ALL RIGHTS RESERVED.

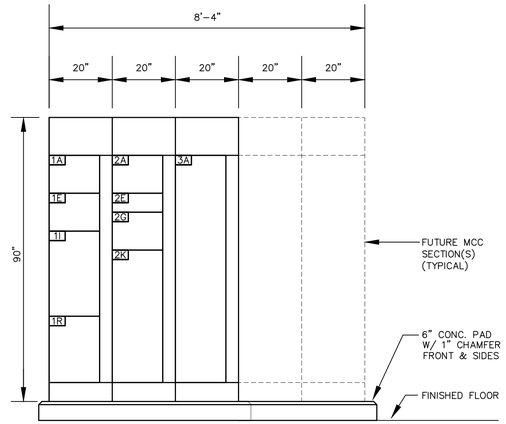

MCC-B1 ELEVATION

SCALE : 1/2" = 1'-0"

MOTOR CONTROL CENTER SCHEDULE - MCC-B1

MCC TYPE:	SQUARE 'D' MODEL 6 MCC	AIC RATING:	100KAIC (MINIMUM)
VOLTAGE:	277/480V-3P-4W	LOCATION:	FINISHED WATER PUMP STATION ELECTRICAL ROOM
MAIN AMPS:	600 AMP - MLO	REMARKS:	
FED FROM:	MSG-1	FEEDER:	SEE MAIN PARALLELING SWITCHGEAR SCHEDULE - MSG-1

UNIT NO.	NAMEPLATE DESCRIPTION	MCC UNIT TYPE	ELECT. EQUIP. CHARACTERISTICS					STARTER NEMA OR AMPERAGE RATING	CIR. BKR. OR MCP	ELEM. DIAG. NO.	LOCAL SAFETY SWITCH RATING	WIRE AND COND. SIZE	REMARKS
			V	P	HP	KW OR KVA	AMPS						
1 A	MCC SURGE PROTECTION DEVICE	240KA (PER PHASE) SURGE PROTECTION DEVICE	277/480	3							-		
1 E	MCC POWER METER	SQUARE D #PM5563 WITH DOOR-MOUNTED DISPLAY AND ETHERNET COMMUNICATION CARD	277/480	3							-		
1 I	SPACE	PROVISIONS FOR FUTURE PLUG-ON UNITS	277/480	3					-/3		-		
1 R	MAIN LUGS	SEE ABOVE	277/480	3							-		
2 A	ATS-B	200/3 BREAKER	277/480	3		64.6			200/3		-	4#3/0 & 1#6G - 2 1/2"C	SEE NOTE 1
2 E	35-EUH-01	COMPACT BREAKER	480	3		12.5			20/3		-	3#12 & 1#12G - 3/4"C	
2 G	35-EF-01	COMBINATION FVNR STARTER WITH MCP	480	3	5			NEMA 1	MCP PER MANUF.	2	-	3#12 & 1#12G - 3/4"C	
2 K	SPACE	PROVISIONS FOR FUTURE PLUG-ON UNITS	277/480	3					-/3		-		
3 A	SPACE	PROVISIONS FOR FUTURE PLUG-ON UNITS	277/480	3					-/3		-		

TOTAL CONNECTED LOAD:	161.6 KVA	202.0 AMPS
TOTAL DEMAND LOAD:	161.6 KVA	202.0 AMPS
TOTAL COMPUTED LOAD:	170.3 KVA	212.9 AMPS

NOTES:
1. BREAKER TYPE SHALL BE AS REQUIRED TO COORDIANTE WITH DOWNSTREAM ATS-B FAULT CURRENT RATING.
2. THIS MCC IS INTENTIONALLY OVERSIZED FOR FUTURE UV LOADS OF APPROXIMATELY 90KVA.

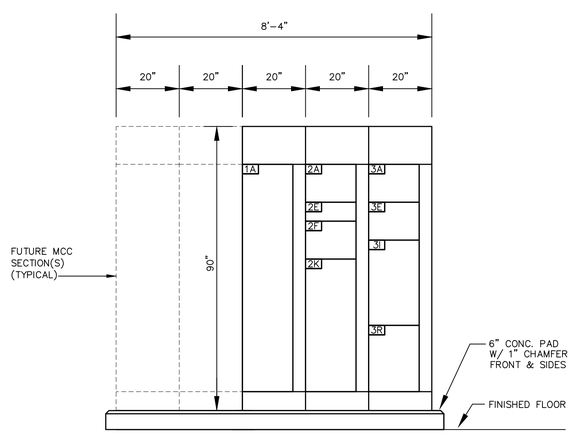

MCC-B2 ELEVATION

SCALE : 1/2" = 1'-0"

MOTOR CONTROL CENTER SCHEDULE - MCC-B2

MCC TYPE:	SQUARE 'D' MODEL 6 MCC	AIC RATING:	100KAIC (MINIMUM)
VOLTAGE:	277/480V-3P-4W	LOCATION:	FINISHED WATER PUMP STATION ELECTRICAL ROOM
MAIN AMPS:	600 AMP - MLO	REMARKS:	
FED FROM:	MSG-2	FEEDER:	SEE MAIN PARALLELING SWITCHGEAR SCHEDULE - MSG-2

UNIT NO.	NAMEPLATE DESCRIPTION	MCC UNIT TYPE	ELECT. EQUIP. CHARACTERISTICS					STARTER NEMA OR AMPERAGE RATING	CIR. BKR. OR MCP	ELEM. DIAG. NO.	LOCAL SAFETY SWITCH RATING	WIRE AND COND. SIZE	REMARKS
			V	P	HP	KW OR KVA	AMPS						
1 A	SPACE	PROVISIONS FOR FUTURE PLUG-ON UNITS	277/480	3					-/3		-		
2 A	ATS-B	200/3 BREAKER	277/480	3		64.6			200/3		-	4#3/0 & 1#6G - 2 1/2"C	SEE NOTE 1
2 E	35-EUH-02	COMPACT BREAKER	480	3		12.5			20/3		-	3#12 & 1#12G - 3/4"C	
2 G	35-EF-02	COMBINATION FVNR STARTER WITH MCP	480	3	5			NEMA 1	MCP PER MANUF.	2	-	3#12 & 1#12G - 3/4"C	
2 K	SPACE	PROVISIONS FOR FUTURE PLUG-ON UNITS	277/480	3					-/3		-		
3 A	MCC SURGE PROTECTION DEVICE	240KA (PER PHASE) SURGE PROTECTION DEVICE WITH DISCONNECT	480	3							-		
3 E	MCC POWER METER	SQUARE D #PM5563 WITH DOOR-MOUNTED DISPLAY AND ETHERNET COMMUNICATION CARD	480	3							-		
3 I	SPACE	PROVISIONS FOR FUTURE PLUG-ON UNITS	277/480	3					-/3		-		
3 R	MAIN LUGS	SEE ABOVE	277/480	3							-		

TOTAL CONNECTED LOAD:	119.6 KVA	149.5 AMPS
TOTAL DEMAND LOAD:	119.6 KVA	149.5 AMPS
TOTAL COMPUTED LOAD:	128.3 KVA	160.4 AMPS

NOTES:
1. BREAKER TYPE SHALL BE AS REQUIRED TO COORDIANTE WITH DOWNSTREAM ATS-B FAULT CURRENT RATING.
2. THIS MCC IS INTENTIONALLY OVERSIZED FOR FUTURE UV LOADS OF APPROXIMATELY 45KVA.

JACKSON, RENFRO & ASSOCIATES, INC.
ELECTRICAL ENGINEERING & DESIGN
141 VILLAGE STREET • SUITE 1 • BIRMINGHAM, ALABAMA • 35242
PHILIP D. BLACK, PE
phil@jraee.com
(D) 205.536.7120
(P) 205.995.1078
JRA JOB NO. 221201

ALABAMA LICENSED No. 27420 PROFESSIONAL ENGINEER PHILIP D. BLACK
9/18/2024

NO.	DATE	REVISION	BY	APVD
DSGN	ZJG	CHK	ZJG	PDB
		DR		

PAUL B. KREBS WATER TREATMENT PLANT
IMPROVEMENTS
ANNISTON WATER WORKS & SEWER BOARD
CITY OF ANNISTON, ALABAMA

Jacobs

ELECTRICAL
ELECTRICAL SCHEDULES

REUSE OF DOCUMENTS: THIS DOCUMENT, AND THE IDEAS AND DESIGNS INCORPORATED HEREIN, AS AN INSTRUMENT OF PROFESSIONAL SERVICE, IS THE PROPERTY OF JACOBS AND IS NOT TO BE USED, IN WHOLE OR IN PART, FOR ANY OTHER PROJECT WITHOUT THE WRITTEN AUTHORIZATION OF JACOBS.

VERIFY SCALE
BAR IS ONE INCH ON ORIGINAL DRAWING.
0 1"

DATE	SEPTEMBER 2024
PROJ	D3698100
DWG	01-E-015
SHEET	119 of 145

BID DOCUMENTS

©JACOBS 2024. ALL RIGHTS RESERVED.

PANELBOARD/EQUIPMENT SCHEDULE(S) KEYED NOTES LEGEND

KEYED NOTE	DESCRIPTION
GFI	INDICATED BREAKER SHALL BE GFI–TYPE (5mA TRIP).
LON	INDICATED BREAKER SHALL BE PROVIDED WITH LOCK–ON HARDWARE.

TRANSFORMER SCHEDULE

MARK	SIZE (KVA)	DESCRIPTION	PRIMARY VOLTAGE & PHASE	SECONDARY VOLTAGE & PHASE	PANEL FED	MOUNTING	GROUND SIZE	REMARKS
T-B	45	DRY-TYPE	480V-3P-3W	120/208V-3P-4W	RP-B	6" CONCRETE PAD	#6	

TRANSFORMER SCHEDULE NOTES:
1. EXACT TRANSFORMER LOCATIONS SHALL BE FIELD COORDINATED TO PROVIDE CODE-REQUIRED CLEARANCES AND WORKING SPACES AROUND TRANSFORMERS AND ADJACENT EQUIPMENT (SUCH AS PANELBOARDS).
2. ALL TRANSFORMERS SHALL BE MOUNTED ON VIBRATION ISOLATORS PER SPECIFICATION REQUIREMENTS.

SEPARATELY ENCLOSED STARTERS SCHEDULE

"FED FROM" EQUIPMENT	NAMEPLATE DESCRIPTION	UNIT DESCRIPTION	MOUNTING/ENCLOSURE	LOCATION	CHARACTERISTICS V	P	HP	KW	AMPS	STARTER CONTINUOUS AMP RATING	ASSOCIATED ELEM. DIAG.	WIRE & COND. SIZE (TO MOTOR)	KAIC RATING
MSG-1	FINISHED WATER PUMP NO. 1 RVSS	COMBINATION RVSS STARTER WITH MCP, LINE ISOLATION CONTACTOR, LINE SIDE SURGE PROTECTION, AND SHORTING CONTACTOR	SEPARATE NEMA 12 ENCLOSURE	FINISHED WATER PUMP STATION ELECTRICAL ROOM	480	3	700			885 AMPS	1	3 SETS OF 3-500MCM & 1#4/0G - 4"C AND (1) SPARE 4"E.C.	100KAIC
MSG-2	FINISHED WATER PUMP NO. 2 RVSS	COMBINATION RVSS STARTER WITH MCP, LINE ISOLATION CONTACTOR, LINE SIDE SURGE PROTECTION, AND SHORTING CONTACTOR	SEPARATE NEMA 12 ENCLOSURE	FINISHED WATER PUMP STATION ELECTRICAL ROOM	480	3	700			885 AMPS	1	3 SETS OF 3-500MCM & 1#4/0G - 4"C AND (1) SPARE 4"E.C.	100KAIC
MSG-1	FINISHED WATER PUMP NO. 3 RVSS	COMBINATION RVSS STARTER WITH MCP, LINE ISOLATION CONTACTOR, LINE SIDE SURGE PROTECTION, AND SHORTING CONTACTOR	SEPARATE NEMA 12 ENCLOSURE	FINISHED WATER PUMP STATION ELECTRICAL ROOM	480	3	700			885 AMPS	1	3 SETS OF 3-500MCM & 1#4/0G - 4"C AND (1) SPARE 4"E.C.	100KAIC
MSG-2	FINISHED WATER PUMP NO. 4 RVSS	COMBINATION RVSS STARTER WITH MCP, LINE ISOLATION CONTACTOR, LINE SIDE SURGE PROTECTION, AND SHORTING CONTACTOR	SEPARATE NEMA 12 ENCLOSURE	FINISHED WATER PUMP STATION ELECTRICAL ROOM	480	3	700			885 AMPS	1	3 SETS OF 3-500MCM & 1#4/0G - 4"C AND (1) SPARE 4"E.C.	100KAIC
MSG-1	FINISHED WATER PUMP NO. 5 RVSS	COMBINATION RVSS STARTER WITH MCP, LINE ISOLATION CONTACTOR, LINE SIDE SURGE PROTECTION, AND SHORTING CONTACTOR	SEPARATE NEMA 12 ENCLOSURE	FINISHED WATER PUMP STATION ELECTRICAL ROOM	480	3	700			885 AMPS	1	3 SETS OF 3-500MCM & 1#4/0G - 4"C AND (1) SPARE 4"E.C.	100KAIC

NOTES:
1. SEE SPECIFICATIONS FOR ADDITIONAL REQUIREMENTS.

PANELBOARD SCHEDULE - LP-B

PANEL TYPE:	SQUARE 'D' TYPE NF	AIC RATING:	65KAIC (MINIMUM)
VOLTAGE	277/480V-3P-4W	MOUNTING:	SURFACE
AMPS & TYPE:	200/3 MAIN BKR	LOCATION:	FINISHED WATER PUMP STATION ELECTRICAL ROOM
FED FROM:	ATS-B	FEEDER:	SEE AUTOMATIC TRANSFER SWITCH SCHEDULE - ATS-B

CKT. NO.	NOTES	BKR	DESCRIPTION	WATTS	PHASE	WATTS	DESCRIPTION	BKR	NOTES	CKT NO.
1	-	20/3	35-ACCU-01	3,734	A			20/1	-	22
2	-	|	|	3,734	B			20/1	-	23
3	-	|	|	3,734	C			20/1	-	24
4	-	15/3	35-AHU-01	831	A			20/1	-	25
5	-	|	|	831	B			20/1	-	26
6	-	|	|	831	C			20/1	-	27
7	-	20/3	35-ACCU-02	3,734	A			20/1	-	28
8	-	|	|	3,734	B			20/1	-	29
9	-	|	|	3,734	C			20/1	-	30
10	-	15/3	35-AHU-02	831	A			20/1	-	31
11	-	|	|	831	B			20/1	-	32
12	-	|	|	831	C			20/1	-	33
13	-	20/3	SPARE		A			20/1	-	34
14	-	|	|		B			20/1	-	35
15	-	|	|		C			20/1	-	36
16	-	20/3	SPARE		A			20/1	-	37
17	-	|	|		B			20/1	-	38
18	-	|	|		C			20/1	-	39
19	-	20/3	SPARE		A	12,402	RP-B (45 KVA X-FORMER)	80/3	-	40
20	-	|	|		B	12,402	3#4 & 1#8G - 1 1/4"C	|	-	41
21	-	|	|		C	12,402	|	|	-	42

NOTES:
1. PROVIDE INTEGRAL 240KA (PER PHASE) SURGE PROTECTION DEVICE.

PH. A:	PH. B:	PH. C:		
21,532	21,532	21,532	TOTAL CONNECTED LOAD:	59.0 KVA
				73.7 AMPS
			TOTAL DEMAND LOAD:	59.0 KVA
				73.7 AMPS
			TOTAL COMPUTED LOAD:	64.6 KVA
				80.7 AMPS

PANELBOARD SCHEDULE - RP-B

PANEL TYPE:	SQUARE 'D' TYPE NQ	AIC RATING:	10KAIC (MINIMUM)
VOLTAGE	120/208V-3P-4W	MOUNTING:	SURFACE
AMPS & TYPE:	150/3 MAIN BKR	LOCATION:	FINISHED WATER PUMP STATION ELECTRICAL ROOM
FED FROM:	LP-B	FEEDER:	4#1/0 & 1#6G - 2"C

CKT. NO.	NOTES	BKR	DESCRIPTION	WATTS	PHASE	WATTS	DESCRIPTION	BKR	NOTES	CKT NO.
1	-	20/1	FWPS ELECTRICAL ROOM LIGHTING	600	A		SPARE	20/1	-	22
2	-	20/1	FWPS PUMP ROOM LIGHTING	1,620	B		SPARE	20/1	-	23
3	-	20/1	FWPS EXTERIOR LIGHTING	209	C		SPARE	20/1	-	24
4	-	20/1	FWPS ELECTRICAL ROOM REC.	800	A		SPARE	20/1	-	25
5	-	20/1	FWPS ELECTRICAL ROOM REC.	800	B		SPARE	20/1	-	26
6	-	20/1	FWPS GENERATOR AREA REC.	800	C		SPARE	20/1	-	27
7	-	20/1	FWPS PUMP ROOM REC.	1,000	A		SPARE	20/1	-	28
8	-	20/1	FWPS PUMP ROOM REC.	1,000	B		SPARE	20/1	-	29
9	LON	20/1	MSG MASTER CONTROL PNAEL	500	C		SPARE	20/1	-	30
10	LON	20/1	SCADA PLC-FW	800	A			20/1	-	31
11	-	20/1	MSG BATTERY CHARGER	500	B			20/1	-	32
12	-	20/1	SPARE		C			20/1	-	33
13	-	20/1	SPARE		A			20/1	-	34
14	GFI,LON	20/1	FWPS PIPE VAULT SUMP PUMP	670	B			20/1	-	35
15	-	20/1	FUT. FW FLOW VAULT SUMP PUMP	1,200	C			20/1	-	36
16	-	20/1	FW FLOW TRANSMITTER	200	A			20/1	-	37
17	-	20/1	FW FLOW TRANSMITTER REC.	200	B			20/1	-	38
18	-	20/1	FW. PUMPS VIBRATION/TEMP MON.	500	C	5,000	GEN-A LOAD CENTER	100/2	-	39
19	LON	20/1	FWPS AHU DUCT DETECTORS	200	A	5,000	|	|	-	40
20	-	20/1	SPARE		B	5,000	GEN-B LOAD CENTER	100/2	-	41
21	-	20/1	SPARE		C	5,000	|	|	-	42

NOTES:
1. PROVIDE INTEGRAL 160KA (PER PHASE) SURGE PROTECTION DEVICE.

PH. A:	PH. B:	PH. C:		
8,600	9,790	13,209	TOTAL CONNECTED LOAD:	31.6 KVA
				87.8 AMPS
			TOTAL DEMAND LOAD:	31.6 KVA
				87.8 AMPS
			TOTAL COMPUTED LOAD:	37.2 KVA
				103.4 AMPS

JACKSON, RENFRO & ASSOCIATES, INC.
ELECTRICAL ENGINEERING & DESIGN
141 VILLAGE STREET • SUITE 1 • BIRMINGHAM, ALABAMA • 35242
PHILIP D. BLACK, PE
phil@jraee.com
(D) 205.536.7120
(P) 205.995.1078
JRA JOB NO. 221201

ALABAMA LICENSED No. 27420 PROFESSIONAL ENGINEER PHILIP D. BLACK
9/18/2024

NO.	DATE	REVISION	BY	APVD
DSGN	DR	CHK	APVD	
ZJG	ZJG	ZJG	PDB	PDB

REUSE OF DOCUMENTS: THIS DOCUMENT, AND THE IDEAS AND DESIGNS INCORPORATED HEREIN, AS AN INSTRUMENT OF PROFESSIONAL SERVICE, IS THE PROPERTY OF JACOBS AND IS NOT TO BE USED, IN WHOLE OR IN PART, FOR ANY OTHER PROJECT WITHOUT THE WRITTEN AUTHORIZATION OF JACOBS.

PAUL B. KREBS WATER TREATMENT PLANT IMPROVEMENTS
ANNISTON WATER WORKS & SEWER BOARD
CITY OF ANNISTON, ALABAMA

Jacobs

ELECTRICAL
ELECTRICAL SCHEDULES

VERIFY SCALE
BAR IS ONE INCH ON ORIGINAL DRAWING.
0 1"

DATE	SEPTEMBER 2024
PROJ	D3698100
DWG	01-E-016
SHEET	120 of 145

BID DOCUMENTS

©JACOBS 2024. ALL RIGHTS RESERVED.

(EX) MCC-AS
277/480V-3ø-4W
SQUARE D MODEL 6
65KAIC (MINIMUM)

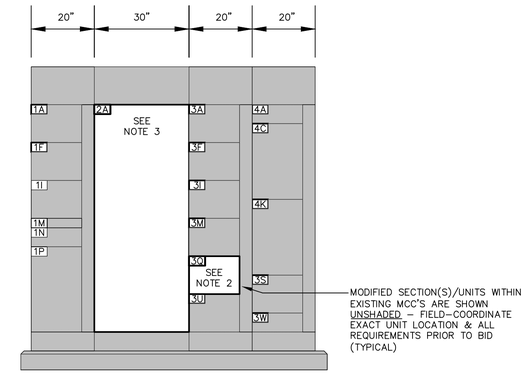

SEE ADDITIVE ALTERNATE NOTES ON SHEET 01-E-001

EXISTING MCC-AS ELEVATION

SCALE : 1/2" = 1'-0"

NOTES THIS SHEET ONLY

1. ALL MCC MODIFICATIONS/ADDITIONS SHALL BE PROVIDED BY THE ORIGINAL MCC SUPPLIER AND SHALL COMPLY WITH ALL APPLICABLE U.L. REQUIREMENTS.
2. REMOVE ALL EXISTING INTERIOR AND EXTERIOR COMPONENTS AND PROVIDE NEW COMBINATION NEMA 2 FVNR STARTER WITH MCP AS DIRECTED BY MANUFACTURER. REPLACE UNIT DOOR WITH NEW DOOR AND ALL NEW DOOR-MOUNTED COMPONENTS. SEE ELEMENTARY DIAGRAM NO. 3
3. MODIFY EXISTING SCADA RTU AS DIRECTED BY I&C ENGINEER.

JACKSON, RENFRO & ASSOCIATES, INC.
ELECTRICAL ENGINEERING & DESIGN
141 VILLAGE STREET • SUITE 1 • BIRMINGHAM, ALABAMA • 35242
PHILIP D. BLACK, PE
phil@jraee.com
(D) 205.536.7120
(P) 205.995.1078
JRA JOB NO. 221201

ALABAMA LICENSED No. 27420 PROFESSIONAL ENGINEER PHILIP D. BLACK
9/18/2024

NO.	DATE	REVISION	BY	APVD

DSGN	DR	CHK	APVD
ZJG	ZJG	PDB	PDB

PAUL B. KREBS WATER TREATMENT PLANT
IMPROVEMENTS
ANNISTON WATER WORKS & SEWER BOARD
CITY OF ANNISTON, ALABAMA

Jacobs

ELECTRICAL
ELECTRICAL SCHEDULES

REUSE OF DOCUMENTS: THIS DOCUMENT, AND THE IDEAS AND DESIGNS INCORPORATED HEREIN, AS AN INSTRUMENT OF PROFESSIONAL SERVICE, IS THE PROPERTY OF JACOBS AND IS NOT TO BE USED, IN WHOLE OR IN PART, FOR ANY OTHER PROJECT WITHOUT THE WRITTEN AUTHORIZATION OF JACOBS.

VERIFY SCALE
BAR IS ONE INCH ON ORIGINAL DRAWING.
0 1"

DATE	SEPTEMBER 2024
PROJ	D3698100
DWG	01-E-017
SHEET	121 of 145

BID DOCUMENTS

©JACOBS 2024. ALL RIGHTS RESERVED.

DUCTBANK SCHEDULE

DUCTBANK	CIRCUITRY	CIRCUIT TYPE	CONDUIT TYPE	I/O HOMERUN TAG	FROM	TO
DB-A (POWER):	4 SETS OF 4-350MCM & 1#3/0G - 3 1/2"C	480V POWER	PVC	-	MSG-1	MCC-A1
	(2) 4"E.C.	SPARE	PVC	-	MSG-1	PB#2024-02
	6#10 & 1#10G - 1"C	120V POWER	PVC	-	RP-B CIR. 15,16,17	F.W. FLOW TRANSMITTER, REC, SUMP PUMP
	(2) 1"E.C.	SPARE	PVC	-	RP-B	PB#2024-02
DB-A (INSTRUMENTATION):	(1) 6-STRAND OS2 FIBER OPTIC FIBER CABLE - 2"C	FIBER OPTIC	PVC	-	MAIN PLC	PLC-FW
	(1) 2"E.C.	SPARE	PVC	-	PLC-FW	PB#2024-02
	(1) 2"E.C.	SPARE	PVC-COATED RIGID STEEL	-	PLC-FW	PB#2024-02
	(1) #16TSP - 1"C	ANALOG I/O	PVC - COATED RIGID STEEL	35-FIT-2-1	PLC-FW	F.W. FLOW TRANSMITTER
DB-A1 (POWER):	6#10 & 1#10G - 1"C	120V POWER	PVC	-	RP-B CIR. 15,16,17	F.W. FLOW TRANSMITTER, REC, SUMP PUMP
	(1) 1"E.C.	SPARE	PVC	-	PB#2024-02	F.W. FLOW VAULT EQUIPMENT STAND
DB-A1 (INSTRUMENTATION):	(1) #16TSP - 1"C	ANALOG I/O	PVC - COATED RIGID STEEL	35-FIT-2-1	PLC-FW	F.W. FLOW TRANSMITTER
DB-B (POWER):	4 SETS OF 4-350MCM & 1#3/0G - 3 1/2"C	480V POWER	PVC	-	MSG-1	MCC-A1
	(2) 4"E.C.	SPARE	PVC	-	PB#2024-02	PB#2024-03
	(2) 1"E.C.	SPARE	PVC	-	PB#2024-02	PB#2024-03
DB-B (INSTRUMENTATION):	(1) 6-STRAND OS2 FIBER OPTIC FIBER CABLE - 2"C	FIBER OPTIC	PVC	-	MAIN PLC	PLC-FW
	(1) 2"E.C.	SPARE	PVC	-	PB#2024-02	PB#2024-03
	(1) 2"E.C.	SPARE	PVC-COATED RIGID STEEL	-	PB#2024-02	PB#2024-03
DB-B1 (POWER):	4 SETS OF 4-350MCM & 1#3/0G - 3 1/2"C	480V POWER	PVC	-	MSG-1	MCC-A1
	(1) 4"E.C.	SPARE	PVC	-	PB#2024-03	EXTERIOR OF TRANSFER PUMP STATION
	(2) 1"E.C.	SPARE	PVC	-	PB#2024-03	MCC-A1
DB-B1 (INSTRUMENTATION):	(1) 6-STRAND OS2 FIBER OPTIC FIBER CABLE - 2"C	FIBER OPTIC	PVC	-	MAIN PLC	PLC-FW
	(1) 2"E.C.	SPARE	PVC	-	PB#2024-03	EXTERIOR OF TRANSFER PUMP STATION
	(1) 2"E.C.	SPARE	PVC-COATED RIGID STEEL	-	PB#2024-03	EXTERIOR OF TRANSFER PUMP STATION
DB-C (POWER):	3 SETS OF 4-400MCM & 1#2/0G - 3 1/2"C	480V POWER	PVC	-	MSG-2	MCC-A2
	(2) 4"E.C.	SPARE	PVC	-	MSG-2	PB#2024-01
	(2) 1"E.C.	SPARE	PVC	-	RP-B	PB#2024-01
DB-C (INSTRUMENTATION):	(1) 2"E.C.	SPARE	PVC-COATED RIGID STEEL	-	PLC-FW	PB#2024-01
	(1) 2"E.C.	SPARE	PVC	-	PLC-FW	PB#2024-01
DB-C1 (POWER):	3 SETS OF 4-400MCM & 1#2/0G - 3 1/2"C	480V POWER	PVC	-	MSG-2	MCC-A2
	(1) 4"E.C.	SPARE	PVC	-	PB#2024-01	EXTERIOR OF TRANSFER PUMP STATION
	(2) 1"E.C.	SPARE	PVC	-	PB#2024-01	MCC-A2
DB-C1 (INSTRUMENTATION):	(1) 2"E.C.	SPARE	PVC-COATED RIGID STEEL	-	PB#2024-01	EXTERIOR OF TRANSFER PUMP STATION
	(1) 2"E.C.	SPARE	PVC	-	PB#2024-01	EXTERIOR OF TRANSFER PUMP STATION

DUCTBANK SCHEDULE (CONTINUED)

DUCTBANK	CIRCUITRY	CIRCUIT TYPE	CONDUIT TYPE	I/O HOMERUN TAG	FROM	TO
DB-D (POWER):	11 SETS OF 4-500MCM & 1-500MCMG - 4"C	480V POWER	PVC		MSG-GEN	GENERATOR GEN-A
	11 SETS OF 4-500MCM & 1-500MCMG - 4"C	480V POWER	PVC		MSG-GEN	GENERATOR GEN-B
	(1) 10C#14 - 1"C	120V CONTROLS	PVC	EG-50-A	PLC-FW	GENERATOR GEN-A
	(1) 10C#14 - 1"C	120V CONTROLS	PVC	EG-50-B	PLC-FW	GENERATOR GEN-B
	3#3 & 1#8G - 1 1/4"C	120/208V POWER	PVC		RP-B CIR. 39,40	GENERATOR GEN-A LOAD CENTER
	3#3 & 1#8G - 1 1/4"C	120/208V POWER	PVC		RP-B CIR. 41,42	GENERATOR GEN-B LOAD CENTER
	(3) 4"E.C.	SPARE	PVC		MSG-GEN	GENERATOR GEN-A
	(3) 4"E.C.	SPARE	PVC		MSG-GEN	GENERATOR GEN-B
DB-D (INSTRUMENTATION):	CONTROL WIRING AS REQUIRED - (2) 1 1/4"C	CONTROLS	PVC	-	MSG-GEN	GENERATOR GEN-A
	CONTROL WIRING AS REQUIRED - (2) 1 1/4"C	CONTROLS	PVC	-	MSG-GEN	GENERATOR GEN-B
	(1) 2"E.C.	SPARE	PVC-COATED RIGID STEEL	-	MSG-GEN	GENERATOR GEN-A
	(1) 2"E.C.	SPARE	PVC-COATED RIGID STEEL	-	MSG-GEN	GENERATOR GEN-B

ALABAMA LICENSED No. 27420 PROFESSIONAL ENGINEER PHILIP D. BLACK
9/18/2024

NO.	DATE	REVISION	DR	CHK	APVD	BY	APVD
DSGN			ZJG	ZJG	PDB		PDB

PAUL B. KREBS WATER TREATMENT PLANT
IMPROVEMENTS
ANNISTON WATER WORKS & SEWER BOARD
CITY OF ANNISTON, ALABAMA

REUSE OF DOCUMENTS: THIS DOCUMENT, AND THE IDEAS AND DESIGNS INCORPORATED HEREIN, AS AN INSTRUMENT OF PROFESSIONAL SERVICE, IS THE PROPERTY OF JACOBS AND IS NOT TO BE USED, IN WHOLE OR IN PART, FOR ANY OTHER PROJECT WITHOUT THE WRITTEN AUTHORIZATION OF JACOBS.

Jacobs

ELECTRICAL
DUCTBANK SCHEDULE

JACKSON, RENFRO & ASSOCIATES, INC.
ELECTRICAL ENGINEERING & DESIGN
141 VILLAGE STREET • SUITE 1 • BIRMINGHAM, ALABAMA • 35242
PHILIP D. BLACK, PE
phil@jraee.com
(D) 205.536.7120
(P) 205.995.1078
JRA JOB NO. 221201

VERIFY SCALE
BAR IS ONE INCH ON ORIGINAL DRAWING.
0 1"

DATE	SEPTEMBER 2024
PROJ	D3698100
DWG	01-E-018
SHEET	122 of 145

BID DOCUMENTS

©JACOBS 2024. ALL RIGHTS RESERVED.

SCADA MAIN PLC - POINT LIST AND CONTROL & INSTRUMENTATION WIRING SCHEDULE

HOMERUN MARK	TO	EQUIP. ID NO.	EQUIPMENT DESCRIPTION	PARAMETER	POINT TYPE	TAG	WIRING	SHEET	REMARKS
P-60-2-2	MAIN PLC	P-60-2-2	TRANSFER PUMP NO. 2	ON/OFF CONTROL	DO	P-60-2-2-YC	(2) 8C#14 - 1 1/4"C &	60-E-201	RECONNECT TO (EX) I/O
				ON/OFF STATUS	DI	P-60-2-2-YI	(1) CAT6 CABLE - 3/4"C		RECONNECT TO (EX) I/O
				H/O/A SWITCH POSITION INDICATION	DI	P-60-2-2-HS			RECONNECT TO (EX) I/O
				OVERLOAD ALARM	DI	P-60-2-2-YA:OL			RECONNECT TO (EX) I/O
		P-60-2-4	TRANSFER PUMP NO. 4	ON/OFF CONTROL	DO	P-60-2-4-YC			RECONNECT TO (EX) I/O
				ON/OFF STATUS	DI	P-60-2-4-YI			RECONNECT TO (EX) I/O
				H/O/A SWITCH POSITION INDICATION	DI	P-60-2-4-HS			RECONNECT TO (EX) I/O
				OVERLOAD ALARM	DI	P-60-2-4-YA:OL			RECONNECT TO (EX) I/O

NOTES:
1. THIS SCHEDULE ONLY SHOWS NEW SCADA I/O POINTS. EXISTING CONTROL PANEL IS TO BE MODIFIED AS REQUIRED BY SCADA INTEGRATOR TO INCORPORATE NEW I/O.

SEE ADDITIVE ALTERNATE NOTES ON SHEET 01–E–001

SCADA RTU-AS - POINT LIST AND CONTROL & INSTRUMENTATION WIRING SCHEDULE

HOMERUN MARK	TO	EQUIP. ID NO.	EQUIPMENT DESCRIPTION	PARAMETER	POINT TYPE	TAG	WIRING	SHEET	REMARKS
25-B-1-7	RTU-AS	25-B-1-7	AIR STRIPPING TOWER NO. 7 BLOWER	ON/OFF CONTROL	DO	25-B-1-7-YC	(1) 4C#14 - WITHIN MCC WIREWAYS	25-E-201	
				ON/OFF STATUS	DI	25-B-1-7-YI			

NOTES:
1. THIS SCHEDULE ONLY SHOWS NEW SCADA I/O POINTS. EXISTING CONTROL PANEL IS TO BE MODIFIED AS REQUIRED BY SCADA INTEGRATOR TO INCORPORATE NEW I/O.

CONTROL & INSTRUMENTATION WIRING SCHEDULES LEGEND & NOTES

LEGEND:
"DI" - DISCRETE INPUT POINT
"DO" - DISCRETE OUTPUT POINT
"AI" - ANALOG INPUT POINT
"AO" - ANALOG OUTPUT POINT
"EN-" - ETHERNET NETWORK POINT(S) - NOTE: EXACT NETWORK CABLE TYPE & PROTOCOL SHALL BE AS DIRECTED BY SCADA INTEGRATOR. SEE NOTE 5 BELOW.
"N" - NETWORK

NOTES:
1. SEE SPECIFICATIONS FOR ADDITIONAL REQUIREMENTS & INFORMATION.
2. SEE PLANT NETWORK CONNECTION DIAGRAM FOR ADDITIONAL REQUIREMENTS & INFORMATION.
3. ALL CONTROL CABLING (IDENTIFIED WITH "*C#14" OR SIMILAR DESIGNATIONS) SHALL BE 600V MULTI-CONDUCTOR TRAY CABLE PER SPECIFICATION REQUIREMENTS.
4. ALL INSTRUMENTATION CABLING (IDENTIFIED WITH "TSP" OR "SHD" DESIGNATIONS) SHALL BE 300V TWISTED, OVERALL-SHIELDED TRAY CABLE.
5. ALL NETWORKED POINTS LISTED ARE REPRESENTATIVE ONLY. EQUIPMENT SUPPLIERS OF PANELS/EQUIPMENT CONNECTED TO SCADA SYSTEM VIA NETWORK CONNECTIONS SHALL PROVIDE REGISTER LISTS OF ALL AVAILABLE POINTS TO THE SCADA INTEGRATOR AND CIVIL ENGINEER PRIOR TO PREPARATION OF SHOP DRAWINGS. SCADA INTEGRATOR SHALL PROVIDE PROGRAMMING/HMI FOR ALL NETWORKED POINTS CHOSEN BY THE CIVIL ENGINEER.

JACKSON, RENFRO & ASSOCIATES, INC.
ELECTRICAL ENGINEERING & DESIGN
141 VILLAGE STREET • SUITE 1 • BIRMINGHAM, ALABAMA • 35242
PHILIP D. BLACK, PE
phil@jraee.com
(D) 205.536.7120
(P) 205.995.1078
JRA JOB NO. 221201

ALABAMA LICENSED No. 27420 PROFESSIONAL ENGINEER PHILIP D. BLACK
9/18/2024

NO.	DATE	REVISION	BY	APVD
DSGN	ZJG	CHK	ZJG	PDB
DR	ZJG	APVD	PDB	

PAUL B. KREBS WATER TREATMENT PLANT
IMPROVEMENTS
ANNISTON WATER WORKS & SEWER BOARD
CITY OF ANNISTON, ALABAMA

Jacobs

ELECTRICAL
CONTROL AND INSTRUMENTATION SCHEDULES

REUSE OF DOCUMENTS: THIS DOCUMENT, AND THE IDEAS AND DESIGNS INCORPORATED HEREIN, AS AN INSTRUMENT OF PROFESSIONAL SERVICE, IS THE PROPERTY OF JACOBS AND IS NOT TO BE USED, IN WHOLE OR IN PART, FOR ANY OTHER PROJECT WITHOUT THE WRITTEN AUTHORIZATION OF JACOBS.

VERIFY SCALE
BAR IS ONE INCH ON ORIGINAL DRAWING.
0 1"

DATE	SEPTEMBER 2024
PROJ	D3698100
DWG	01-E-021
SHEET	123 of 145

BID DOCUMENTS

©JACOBS 2024. ALL RIGHTS RESERVED.

SCADA PLC-FW POINT LIST AND CONTROL & INSTRUMENTATION WIRING SCHEDULE

HOMERUN MARK	TO	EQUIP. ID NO.	EQUIPMENT DESCRIPTION	PARAMETER	POINT TYPE	TAG	WIRING	SHEET	REMARKS
LCP-40-30	PLC-FW	LCP-40-30	FLUORIDE TANK LEVEL MONITORING CONTROL PANEL	LEVEL ALARM - HIGH	DI	LCP-40-30-LAH	(1) 2C#14 - 3/4"C	40-E-201	
		40-LIT-30-1	FLUORIDE TANK NO. 1 LEVEL TRANSMITTER	LEVEL INDICATION	AI	40-LIT-30-1-LI	(2) #16TSP - 1"C		
		40-LIT-30-2	FLUORIDE TANK NO. 2 LEVEL TRANSMITTER	LEVEL INDICATION	AI	40-LIT-30-2-LI			
P-35-2-1	PLC-FW	P-35-2-1	FINISHED WATER PUMP NO. 1	ON/OFF CONTROL	DO	P-35-2-1-YC	(1) 18C#14 - 1 1/4"C &	35-E-202	
				ON/OFF STATUS	DI	P-35-2-1-YI	(1) #16TSP - 1"C		
				LOW SUCTION PRESSURE CUTOFF CONTROLS DISABLED	DI	P-35-2-1-HS:SPC			
				HIGH DISCHARGE PRESSURE CUTOFF CONTROLS DISABLED	DI	P-35-2-1-HS:DPC			
				H/O/A SWITCH POSITION INDICATION	DI	P-35-2-1-HS			
				OVERLOAD ALARM	DI	P-35-2-1-YA:OL			
				TEMPERATURE ALARM - HIGH	DI	P-35-2-1-TAH			
				SUCTION PRESSURE ALARM - LOW	DI	P-35-2-1-PAL			
				DISCHARGE PRESSURE ALARM - HIGH	DI	P-35-2-1-PAH			
				CURRENT (AMPERAGE) INDICATION - 3 PHASE AVG.	AI	P-35-2-1-II			
P-35-2-2	PLC-FW	P-35-2-2	FINISHED WATER PUMP NO. 2	ON/OFF CONTROL	DO	P-35-2-2-YC	(1) 18C#14 - 1 1/4"C &	35-E-202	
				ON/OFF STATUS	DI	P-35-2-2-YI	(1) #16TSP - 1"C		
				LOW SUCTION PRESSURE CUTOFF CONTROLS DISABLED	DI	P-35-2-2-HS:SPC			
				HIGH DISCHARGE PRESSURE CUTOFF CONTROLS DISABLED	DI	P-35-2-2-HS:DPC			
				H/O/A SWITCH POSITION INDICATION	DI	P-35-2-2-HS			
				OVERLOAD ALARM	DI	P-35-2-2-YA:OL			
				TEMPERATURE ALARM - HIGH	DI	P-35-2-2-TAH			
				SUCTION PRESSURE ALARM - LOW	DI	P-35-2-2-PAL			
				DISCHARGE PRESSURE ALARM - HIGH	DI	P-35-2-2-PAH			
				CURRENT (AMPERAGE) INDICATION - 3 PHASE AVG.	AI	P-35-2-2-II			
P-35-2-3	PLC-FW	P-35-2-3	FINISHED WATER PUMP NO. 3	ON/OFF CONTROL	DO	P-35-2-3-YC	(1) 18C#14 - 1 1/4"C &	35-E-202	
				ON/OFF STATUS	DI	P-35-2-3-YI	(1) #16TSP - 1"C		
				LOW SUCTION PRESSURE CUTOFF CONTROLS DISABLED	DI	P-35-2-3-HS:SPC			
				HIGH DISCHARGE PRESSURE CUTOFF CONTROLS DISABLED	DI	P-35-2-3-HS:DPC			
				H/O/A SWITCH POSITION INDICATION	DI	P-35-2-3-HS			
				OVERLOAD ALARM	DI	P-35-2-3-YA:OL			
				TEMPERATURE ALARM - HIGH	DI	P-35-2-3-TAH			
				SUCTION PRESSURE ALARM - LOW	DI	P-35-2-3-PAL			
				DISCHARGE PRESSURE ALARM - HIGH	DI	P-35-2-3-PAH			
				CURRENT (AMPERAGE) INDICATION - 3 PHASE AVG.	AI	P-35-2-3-II			
P-35-2-4	PLC-FW	P-35-2-4	FINISHED WATER PUMP NO. 4	ON/OFF CONTROL	DO	P-35-2-4-YC	(1) 18C#14 - 1 1/4"C &	35-E-202	
				ON/OFF STATUS	DI	P-35-2-4-YI	(1) #16TSP - 1"C		
				LOW SUCTION PRESSURE CUTOFF CONTROLS DISABLED	DI	P-35-2-4-HS:SPC			
				HIGH DISCHARGE PRESSURE CUTOFF CONTROLS DISABLED	DI	P-35-2-4-HS:DPC			
				H/O/A SWITCH POSITION INDICATION	DI	P-35-2-4-HS			
				OVERLOAD ALARM	DI	P-35-2-4-YA:OL			
				TEMPERATURE ALARM - HIGH	DI	P-35-2-4-TAH			
				SUCTION PRESSURE ALARM - LOW	DI	P-35-2-4-PAL			
				DISCHARGE PRESSURE ALARM - HIGH	DI	P-35-2-4-PAH			
				CURRENT (AMPERAGE) INDICATION - 3 PHASE AVG.	AI	P-35-2-4-II			
P-35-2-5	PLC-FW	P-35-2-5	FINISHED WATER PUMP NO. 5	ON/OFF CONTROL	DO	P-35-2-5-YC	(1) 18C#14 - 1 1/4"C &	35-E-202	
				ON/OFF STATUS	DI	P-35-2-5-YI	(1) #16TSP - 1"C		
				LOW SUCTION PRESSURE CUTOFF CONTROLS DISABLED	DI	P-35-2-5-HS:SPC			
				HIGH DISCHARGE PRESSURE CUTOFF CONTROLS DISABLED	DI	P-35-2-5-HS:DPC			
				H/O/A SWITCH POSITION INDICATION	DI	P-35-2-5-HS			
				OVERLOAD ALARM	DI	P-35-2-5-YA:OL			
				TEMPERATURE ALARM - HIGH	DI	P-35-2-5-TAH			
				SUCTION PRESSURE ALARM - LOW	DI	P-35-2-5-PAL			
				DISCHARGE PRESSURE ALARM - HIGH	DI	P-35-2-5-PAH			
				CURRENT (AMPERAGE) INDICATION - 3 PHASE AVG.	AI	P-35-2-5-II			
35-CR-1-1	PLC-FW	35-CR-1-1	FINISHED WATER PUMP NO. 1 VIBRATION/TEMPERATURE MONITORING MODULE(S)	NETWORK	EN- N	35-CR-1-1-N	(5) GEL-FILLED CAT6 CABLES & (2) SPARE CAT6 CABLES - 2"C	35-E-201	
		35-CR-1-2	FINISHED WATER PUMP NO. 2 VIBRATION/TEMPERATURE MONITORING MODULE(S)	NETWORK	EN- N	35-CR-1-2-N			
		35-CR-1-3	FINISHED WATER PUMP NO. 3 VIBRATION/TEMPERATURE MONITORING MODULE(S)	NETWORK	EN- N	35-CR-1-3-N			
		35-CR-1-4	FINISHED WATER PUMP NO. 4 VIBRATION/TEMPERATURE MONITORING MODULE(S)	NETWORK	EN- N	35-CR-1-4-N			
		35-CR-1-5	FINISHED WATER PUMP NO. 5 VIBRATION/TEMPERATURE MONITORING MODULE(S)	NETWORK	EN- N	35-CR-1-5-N			
LCP-37	PLC-FW	LCP-37	SURGE TANK AIR COMPRESSOR SKID	ALARM	DI	LCP-37-YA	(1) 2C#14 - 3/4"C	40-E-201	
35-PIT-2-1	PLC-FW	35-PIT-2-1	FINISHED WATER PRESSURE TRANSMITTER	PRESSURE INDICATION	AI	35-PIT-2-1-PI	(1) #16TSP & 1#14G - 1"C	35-E-201	
35-FIT-2-1	PLC-FW	35-FIT-2-1	FINISHED WATER FLOW TRANSMITTER	FLOW INDICATION	AI	35-FIT-2-1-FI	(1) #16TSP - 1"C	05-E-205	
35-BSSH-10-1	PLC-FW	35-BSSH-10-1	FINISHED WATER PUMP STATION 35-AHU-01 SMOKE DETECTOR	SMOKE PRESENT	DI	35-BSSH-10-1-YA:SM	(1) 2C#14 - 3/4"C	35-E-204	
35-BSSH-10-2	PLC-FW	35-BSSH-10-2	FINISHED WATER PUMP STATION 35-AHU-02 SMOKE DETECTOR	SMOKE PRESENT	DI	35-BSSH-10-2-YA:SM	(1) 2C#14 - 3/4"C	35-E-204	
35-BSAH-10-1	PLC-FW	35-BSAH-10-1	FINISHED WATER PUMP STATION AHU SMOKE DETCTOR HORN STROBE	SMOKE ALARM INDICATION	DO	35-BSAH-10-1-YI:SM	(1) 2C#14 W/G - 3/4"C	35-E-204	POWER SOURCED FROM SCADA PLC
50-SEC-SWGR	PLC-FW	50-SEC-SWGR	MAIN SWITCHGEAR CONTROLS COMPARTMENT	NETWORK	EN- N	50-SEC-SWGR-N	(1) GEL-GILLED CAT6 CABLE - 3/4"C	35-E-201	SEE C & I NOTE 5
EG-50-A	PLC-FW	EG-50-A	GENERATOR GEN-A	ON/OFF STATUS	DI	EG-50-A-YI	(1) 10C#14 - 1"C	35-E-201	
				MINOR ALARM	DI	EG-50-A-YAH			
				MAJOR ALARM	DI	EG-50-A-YAHH			
				LOW FUEL ALARM	DI	EG-50-A-YA:LF			
EG-50-B	PLC-FW	EG-50-B	GENERATOR GEN-B	ON/OFF STATUS	DI	EG-50-B-YI	(1) 10C#14 - 1"C	35-E-201	
				MINOR ALARM	DI	EG-50-B-YAH			
				MAJOR ALARM	DI	EG-50-B-YAHH			
				LOW FUEL ALARM	DI	EG-50-B-YA:LF			
50-PLC-FW	PLC-FW	50-PLC-FW	SCADA PLC-FW	120V POWER INPUT FAILURE	DI	50-PLC-FW-PNA	N/A - INTEGRAL	N/A	INTEGRAL TO PLC
				UPS POWER FAILURE	DI	50-PLC-FW-PUA			INTEGRAL TO PLC
				DC POWER FAILURE	DI	50-PLC-FW-PDA			INTEGRAL TO PLC
				PROCESSOR FAILURE	DI	50-PLC-FW-PRA			INTEGRAL TO PLC
		50-TT-FW	PLC-FW TEMPERATURE TRANSMITTER	TEMPERATURE INDICATION	AI	50-TT-FW-TI			INTEGRAL TO PLC

JACKSON, RENFRO & ASSOCIATES, INC.
ELECTRICAL ENGINEERING & DESIGN
141 VILLAGE STREET • SUITE 1 • BIRMINGHAM, ALABAMA • 35242
PHILIP D. BLACK, PE
phil@jraae.com
(D) 205.536.7120
(P) 205.995.1078
JRA JOB NO. 221201

ALABAMA LICENSED No. 27420 PROFESSIONAL ENGINEER PHILIP D. BLACK
9/18/2024

NO.	DATE	REVISION	BY	APVD
DSGN	DR	CHK	APVD	PDB
ZJG	ZJG	PDB		

PAUL B. KREBS WATER TREATMENT PLANT IMPROVEMENTS
ANNISTON WATER WORKS & SEWER BOARD
CITY OF ANNISTON, ALABAMA

REUSE OF DOCUMENTS: THIS DOCUMENT, AND THE IDEAS AND DESIGNS INCORPORATED HEREIN, AS AN INSTRUMENT OF PROFESSIONAL SERVICE, IS THE PROPERTY OF JACOBS AND IS NOT TO BE USED, IN WHOLE OR IN PART, FOR ANY OTHER PROJECT WITHOUT THE WRITTEN AUTHORIZATION OF JACOBS.

Jacobs

ELECTRICAL
CONTROL AND INSTRUMENTATION SCHEDULES

VERIFY SCALE
BAR IS ONE INCH ON ORIGINAL DRAWING.
0 1"

DATE	SEPTEMBER 2024
PROJ	D3698100
DWG	01-E-022
SHEET	124 of 145

BID DOCUMENTS

©JACOBS 2024. ALL RIGHTS RESERVED.

ELEMENTARY DIAGRAM LEGEND

START	PUSHBUTTON – START – NORMALLY OPEN – MOMENTARY CONTACT.
STOP	PUSHBUTTON – STOP – NORMALLY CLOSED – MOMENTARY CONTACT.
E–STOP	PUSHBUTTON – EMERGENCY STOP – NORMALLY CLOSED – MAINTAINED CONTACT – MUSHROOM HEAD.
H O A XOO	SELECTOR SWITCH – HAND–OFF–AUTOMATIC – MAINTAINED CONTACT – "XOO" INDICATES THAT CONTACT IS ONLY CLOSED IN THE FIRST (HAND) POSITION (MAY BE USED WITH OTHER COMBINATIONS OF "X" & "O").
OFF ON OX	SELECTOR SWITCH – ON–OFF – MAINTAINED CONTACT – "XO" INDICATES – THAT CONTACT IS ONLY CLOSED IN THE FIRST (ON) POSITION (MAY BE USED WITH OTHER COMBINATIONS OF "X" & "O").
M	MOTOR STARTER COIL.
BP	BYPASS MOTOR STARTER COIL.
OL	OVERLOAD RELAY CONTACT.
CR	CONTROL RELAY COIL.
	CONTROL CONTACT – NORMALLY OPEN.
	CONTROL CONTACT – NORMALLY CLOSED.
	INDICATOR LIGHT – COLOR AS SHOWN.
	CONTROL TRANSFORMER.
ETM	ELAPSED TIME METER.
▲	DEVICE LOCATED ON STARTER DOOR.
■	DEVICE LOCATED ADJACENT TO MOTOR.
●	DEVICE LOCATED REMOTE – SEE PLAN.
⊠	TERMINAL BLOCK WITHIN STARTER UNIT.
	FLOAT SWITCH – CLOSES ON RISING LEVEL.
	FLOAT SWITCH – CLOSES ON FALLING LEVEL.
	PRESSURE SWITCH – CLOSES ON INCREASE PRESSURE.
	PRESSURE SWITCH – CLOSES ON DECREASE PRESSURE.
	LIMIT SWITCH – NORMALLY OPEN – HELD CLOSED.
	LIMIT SWITCH – NORMALLY CLOSED – HELD OPEN.
TR	TIME DELAY RELAY COIL.
	TIME DELAY RELAY CONTACT – NORMALLY CLOSED, TIME OPEN.
	TIME DELAY RELAY CONTACT – NORMALLY OPEN, TIME CLOSED.
	TIME DELAY RELAY CONTACT – NORMALLY OPEN, TIME OPEN.
	TIME DELAY RELAY CONTACT – NORMALLY CLOSED, TIME CLOSED.
	SOLENOID VALVE.
	THERMOSTAT – NORMALLY CLOSED, OPENS ON HIGH TEMP.
	THERMOSTAT – NORMALLY OPEN, CLOSES ON HIGH TEMP.
	ALARM HORN.

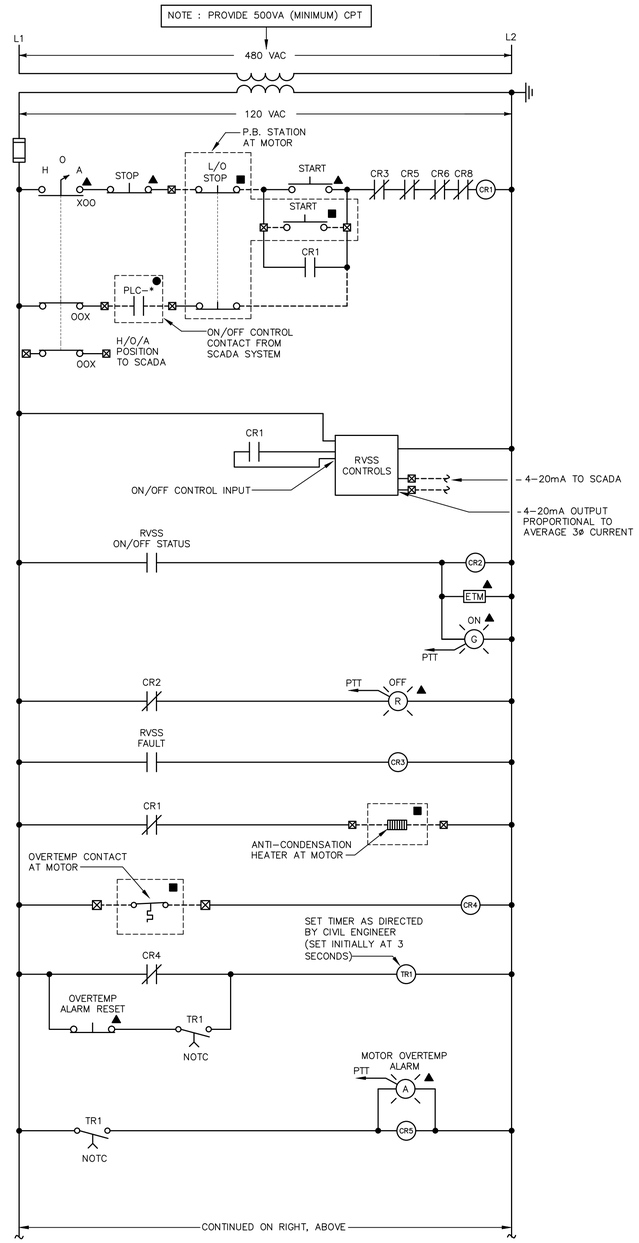

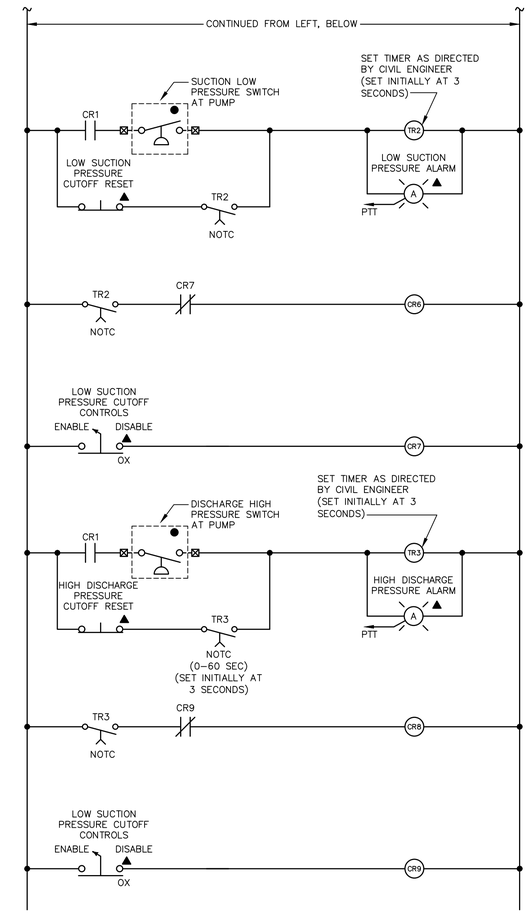

CR2	ON/OFF STATUS TO SCADA	CR5	MOTOR OVERTEMP ALARM STATUS TO SCADA					
CR3	RVSS ALARM STATUS TO SCADA	TR2 NOTC	LOW SUCTION PRESSURE ALARM STATUS TO SCADA	CR7	LOW SUCTION PRESSURE CUTOFF DISABLED	TR3 NOTC	HIGH DISCHARGE PRESSURE ALARM STATUS TO SCADA	CR9	HIGH DISCHARGE PRESSURE CUTOFF DISABLED

ELEMENTARY DIAGRAM NO. 1

FINISHED WATER PUMPS NO. 1, 2, 3, 4, & 5:

(SEPARATELY–ENCLOSED RVSS's)

JACKSON, RENFRO & ASSOCIATES, INC.
ELECTRICAL ENGINEERING & DESIGN
141 VILLAGE STREET • SUITE 1 • BIRMINGHAM, ALABAMA • 35242
PHILIP D. BLACK, PE
phil@jraee.com
(D) 205.536.7120
(P) 205.995.1078
JRA JOB NO. 221201

ALABAMA LICENSED No. 27420 PROFESSIONAL ENGINEER PHILIP D. BLACK

9/18/2024

NO.	DATE	REVISION	BY	APVD
DSGN	ZJG	DR	ZJG	CHK	PDB	APVD	PDB

PAUL B. KREBS WATER TREATMENT PLANT IMPROVEMENTS
ANNISTON WATER WORKS & SEWER BOARD
CITY OF ANNISTON, ALABAMA

REUSE OF DOCUMENTS: THIS DOCUMENT, AND THE IDEAS AND DESIGNS INCORPORATED HEREIN, AS AN INSTRUMENT OF PROFESSIONAL SERVICE, IS THE PROPERTY OF JACOBS AND IS NOT TO BE USED, IN WHOLE OR IN PART, FOR ANY OTHER PROJECT WITHOUT THE WRITTEN AUTHORIZATION OF JACOBS.

Jacobs

ELECTRICAL
ELEMENTARY DIAGRAMS

VERIFY SCALE
BAR IS ONE INCH ON ORIGINAL DRAWING.
0 1"

DATE	SEPTEMBER 2024
PROJ	D3698100
DWG	01-E-031
SHEET	125 of 145

BID DOCUMENTS

©JACOBS 2024. ALL RIGHTS RESERVED.

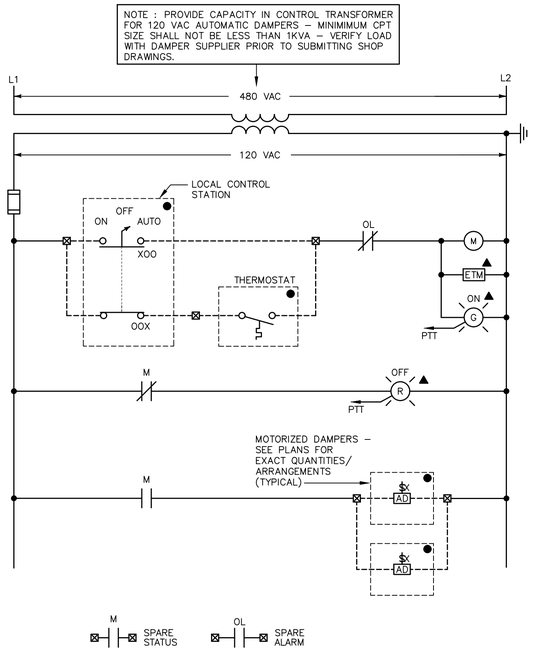

ELEMENTARY DIAGRAM NO. 2

EXHAUST FAN EF–1: MCC–B1

EXHAUST FAN EF–2: MCC–B2

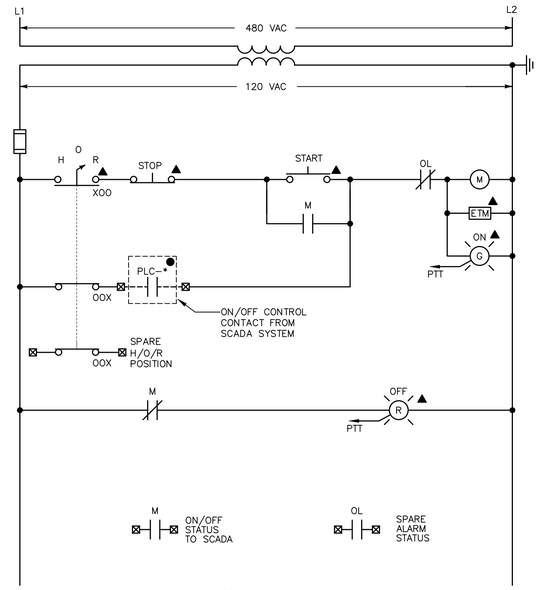

ELEMENTARY DIAGRAM NO. 3

AIR STRIPPING TOWER NO. 7 BLOWER: MCC–AS

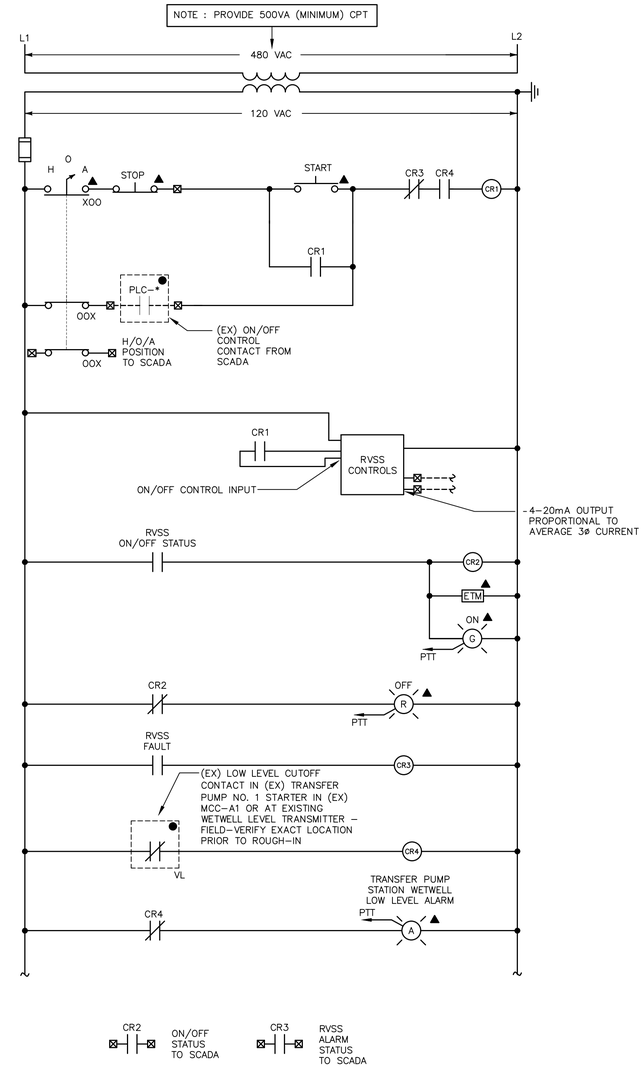

ELEMENTARY DIAGRAM NO. 4

TRANSFER PUMPS NO. 2 AND 4: MCC–A2

NOTE: VERIFY EXACT CONTROL CONFIGURATION PRIOR TO SUBMITTING SHOP DRAWINGS – VERIFY EXACT CIRCUITRY REQUIREMENTS PRIOR TO ROUGH–IN

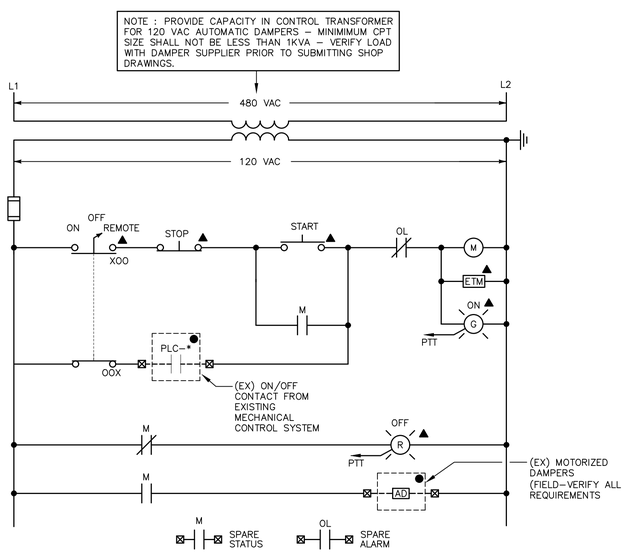

ELEMENTARY DIAGRAM NO. 5

(EX) SUPPLY FAN SF–2 (IN EXISTING ADMINISTRATION BUILDING): MCC–A2

(EX) EXHAUST FAN EF–2, EF–8, & EF–10 (IN EXISTING ADMINISTRATION BUILDING): MCC–A2

NOTE: VERIFY EXACT CONTROL CONFIGURATION PRIOR TO SUBMITTING SHOP DRAWINGS – VERIFY EXACT CIRCUITRY REQUIREMENTS PRIOR TO ROUGH–IN

JACKSON, RENFRO & ASSOCIATES, INC.
ELECTRICAL ENGINEERING & DESIGN
141 VILLAGE STREET • SUITE I • BIRMINGHAM, ALABAMA • 35242
PHILIP D. BLACK, PE
phil@jraee.com
(D) 205.536.7120
(P) 205.995.1078
JRA JOB NO. 221201

ALABAMA LICENSED No. 27420 PROFESSIONAL ENGINEER PHILIP D. BLACK

9/18/2024

NO.	DATE	REVISION	BY	APVD
DSGN	ZJG	DR ZJG	CHK PDB	APVD PDB

PAUL B. KREBS WATER TREATMENT PLANT
IMPROVEMENTS
ANNISTON WATER WORKS & SEWER BOARD
CITY OF ANNISTON, ALABAMA

REUSE OF DOCUMENTS: THIS DOCUMENT, AND THE IDEAS AND DESIGNS INCORPORATED HEREIN, AS AN INSTRUMENT OF PROFESSIONAL SERVICE, IS THE PROPERTY OF JACOBS AND IS NOT TO BE USED, IN WHOLE OR IN PART, FOR ANY OTHER PROJECT WITHOUT THE WRITTEN AUTHORIZATION OF JACOBS.

Jacobs

ELECTRICAL
ELEMENTARY DIAGRAMS

VERIFY SCALE
BAR IS ONE INCH ON ORIGINAL DRAWING.
0 1"

DATE	SEPTEMBER 2024
PROJ	D3698100
DWG	01-E-032
SHEET	126 of 145

BID DOCUMENTS

©JACOBS 2024. ALL RIGHTS RESERVED.

ELECTRICAL DEMOLITION NOTES

1. THE ELECTRICAL DEMOLITION PLANS INDICATE GENERAL SCOPE OF DEMOLITION WORK TO BE ACCOMPLISHED UNDER THIS CONTRACT. IT IS NOT THE INTENT OF THESE PLANS TO DETAIL ALL ELECTRICAL ITEMS THAT MUST BE REMOVED. THE ELECTRICAL CONTRACTOR SHALL REFER TO ALL OTHER DEMOLITION PLANS IN THIS SET OF DRAWINGS FOR ADDITIONAL INFORMATION RELATED TO EXTENT AND SCOPE OF DEMOLITION WORK. REFER TO ELECTRICAL SPECIFICATIONS FOR ADDITIONAL REQUIREMENTS. VERIFY ALL REQUIREMENTS AT JOB SITE PRIOR TO BID.
2. EXISTING SALVAGEABLE MATERIALS REMOVED SHALL REMAIN THE PROPERTY OF THE OWNER AND SHALL BE DELIVERED TO OWNER'S DESIGNATED STORAGE FACILITY. ANY MATERIALS REMOVED THAT THE OWNER DOES NOT WISH TO RETAIN SHALL BE DISPOSED OF BY THE CONTRACTOR.
3. NO EXISTING ELECTRICAL ITEMS SHALL BE REMOVED WITHOUT PRIOR WRITTEN CONSENT OF THE OWNER. THE EXISTING PLANT SHALL BE KEPT OPERATIONAL THROUGHOUT THE CONSTRUCTION PROCESS UNTIL THE NEW PLANT IS IN SERVICE.
4. EXISTING POWER COMPANY SUBSTATION & ASSOCIATED SERVICE TRANSFORMERS, ASSOCIATED UNDERGROUND POWER SERVICE FEEDERS SHALL BE MAINTAINED THROUGHOUT PROJECT, BUT SHALL BE FULLY DEMOLISHED AFTER NEW SERVICE & EQUIPMENT IS FULLY INSTALLED, STARTED UP, TESTED, AND DEMONSTRATED TO BE RELIABLE TO OWNER'S SATISFACTION.
5. ALL EXISTING ELECTRICAL EQUIPMENT, CONDUIT, WIRING, DEVICES, ETC. THAT BECOME OBSOLETE WITHIN THIS PROJECT SHALL BE DEMOLISHED COMPLETELY (OTHER ITEMS SHALL REMAIN IN SERVICE) UNLESS NOTED OTHERWISE.
6. EXISTING OBSOLETE ELECTRICAL DUCTBANKS SHALL BE DEMOLISHED WHERE WITHIN FIVE (5) FEET OF FOOTPRINT INDICATED FOR NEW CONSTRUCTION. EXISTING ELECTRICAL DUCTBANKS OUTSIDE THIS AREA SHALL BE DEMOLISHED TO 36" BELOW GRADE AND BACKFILLED. DUCTBANKS DEEPER THAN 36" BELOW GRADE AND OUTSIDE THE BOVE-REFERENCED FOOTPRINT AREA SHALL BE ABANDONED. REMOVE ALL ELECTRICAL EQUIPMENT, DEVICES, CONDUIT AND WIRING TO INCLUDE FEEDERS AND CONTROL/INSTRUMENTATION WIRING CONNECTIONS TO OTHER BUILDINGS AND STRUCTURES.
7. ALL EXISTING FEEDER CIRCUITRY MADE OBSOLETE BY THIS PROJECT SHALL BE DEMOLISHED COMPLETELY EXCEPT WHERE EXISTING CONDUIT CONCEALED WITHIN WALLS IS TO BE REUSED. SEE ELECTRICAL DEMOLITION NOTE 3.
8. WHERE NEW LIGHTING, RECEPTACLES, INSTRUMENTS, EQUIPMENT, DEVICES OR CIRCUITRY IS SHOWN WITHIN THESE PLANS, EXISTING DEVICES OR CIRCUITRY THAT BECOMES OBSOLETE AS A RESULT SHALL BE DEMOLISHED.
9. REFER TO OTHER ELECTRICAL AND CIVIL PLANS FOR ADDITIONAL DEMOLITION WORK TO BE PERFORMED.
10. MAINTAIN EXISTING SECURITY & CCTV SYSTEMS THROUGHOUT FACILITY AS DIRECTED BY OWNER.
11. COVER ALL UNUSED EXISTING OUTLET BOXES WITH BLANK COVERS.

ELECTRICAL DEMOLITION KEYED NOTES

1. EXISTING BUILDING/STRUCTURES TO BE DEMOLISHED WITHIN THIS PROJECT. DEMOLISH ALL OBSOLETE ELECTRICAL EQUIPMENT, DEVICES, DISCONNECTS, EXPOSED CONDUIT AND WIRING, LIGHTS, ETC TO INCLUDE FEEDERS AND CONTROL/INSTRUMENTATION WIRING CONNECTIONS TO OTHER BUILDINGS AND STRUCTURES.
2. EXISTING BUILDING/STRUCTURES TO BE MODIFIED WITHIN THIS PROJECT. DEMOLISH ALL OBSOLETE LIGHTS, LIGHTING CONTROLS, ETC. INSTALL NEW FIXTURES, LIGHTING CONTROLS, ETC. AS INDICATED ON OTHER PLANS.
3. EXISTING BUILDING/STRUCTURES TO BE MODIFIED WITHIN THIS PROJECT. REPLACE ALL LIGHTS IN PLACE AS INDICATED ON OTHER PLANS.
4. EXISTING BUILDING/STRUCTURES TO BE MODIFIED WITHIN THIS PROJECT. REPLACE ALL LIGHTS IN PLACE AS INDICATED ON OTHER PLANS. ABANDON EXISTING FINISHED WATER PUMPS AND ASSOCIATED STARTERS AND SWITCHGEAR. DEMOLISH OBSOLETE FEEDER CIRCUITRY

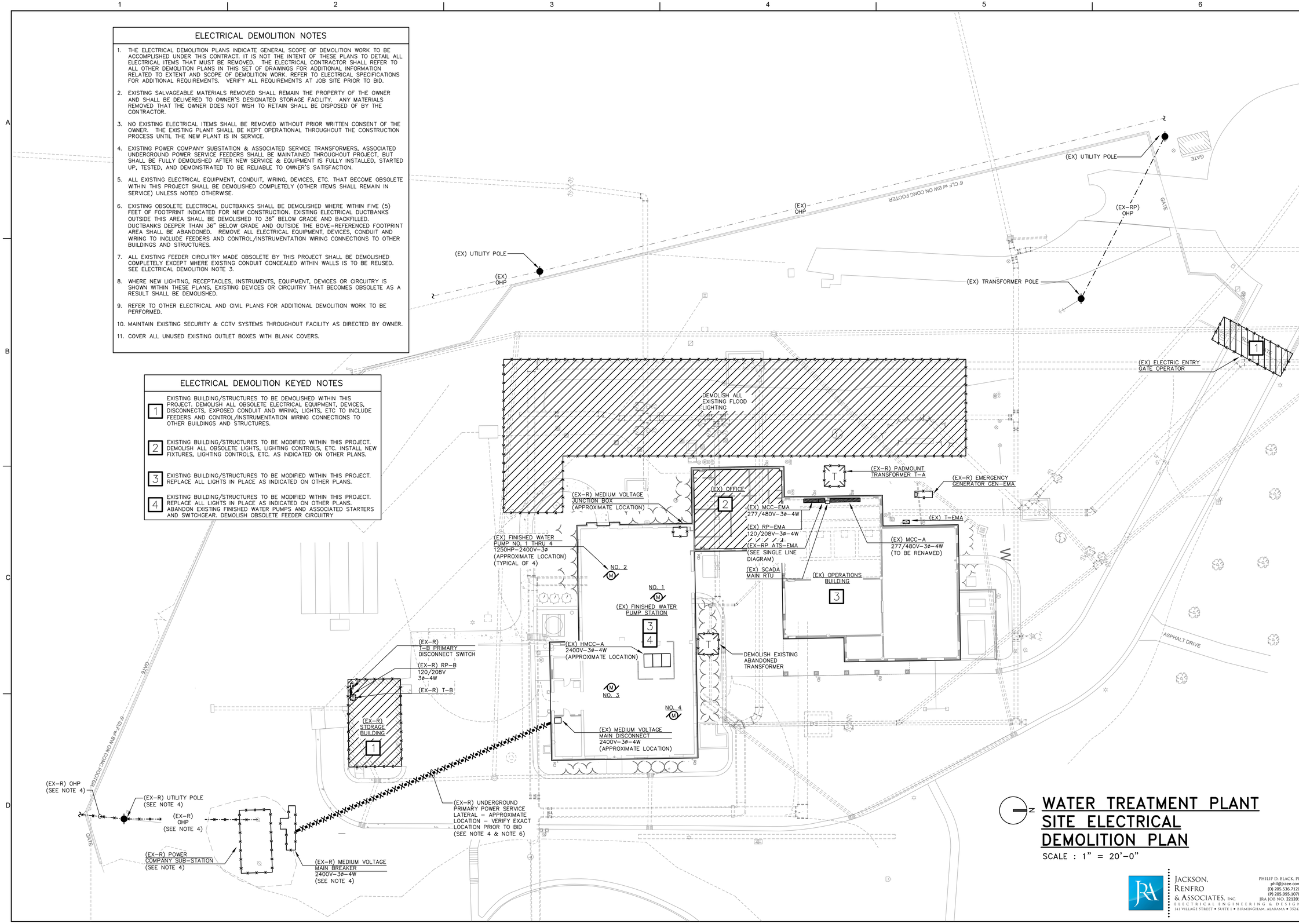

WATER TREATMENT PLANT SITE ELECTRICAL DEMOLITION PLAN

SCALE : 1" = 20'-0"

JACKSON, RENFRO & ASSOCIATES, INC.
ELECTRICAL ENGINEERING & DESIGN
141 VILLAGE STREET • SUITE 1 • BIRMINGHAM, ALABAMA • 35242
PHILLIP D. BLACK, PE
phil@jraee.com
(D) 205.536.7120
(P) 205.995.1078
JRA JOB NO. 221201

ALABAMA LICENSED No. 27420 PROFESSIONAL ENGINEER PHILLIP D. BLACK
9/18/2024

NO.	DATE	DR	REVISION	CHK	APVD	BY	APVD
		ZJG		ZJG	PDB		PDB

DSGN ZJG

PAUL B. KREBS WATER TREATMENT PLANT
IMPROVEMENTS
ANNISTON WATER WORKS & SEWER BOARD
CITY OF ANNISTON, ALABAMA

REUSE OF DOCUMENTS: THIS DOCUMENT, AND THE IDEAS AND DESIGNS INCORPORATED HEREIN, AS AN INSTRUMENT OF PROFESSIONAL SERVICE, IS THE PROPERTY OF JACOBS AND IS NOT TO BE USED, IN WHOLE OR IN PART, FOR ANY OTHER PROJECT WITHOUT THE WRITTEN AUTHORIZATION OF JACOBS.

Jacobs

ELECTRICAL
WATER TREATMENT PLANT SITE
ELECTRICAL DEMOLITION PLAN

VERIFY SCALE
BAR IS ONE INCH ON ORIGINAL DRAWING.
0 1"

DATE	SEPTEMBER 2024
PROJ	D3698100
DWG	05-E-101
SHEET	127 of 145

BID DOCUMENTS

©JACOBS 2024. ALL RIGHTS RESERVED.

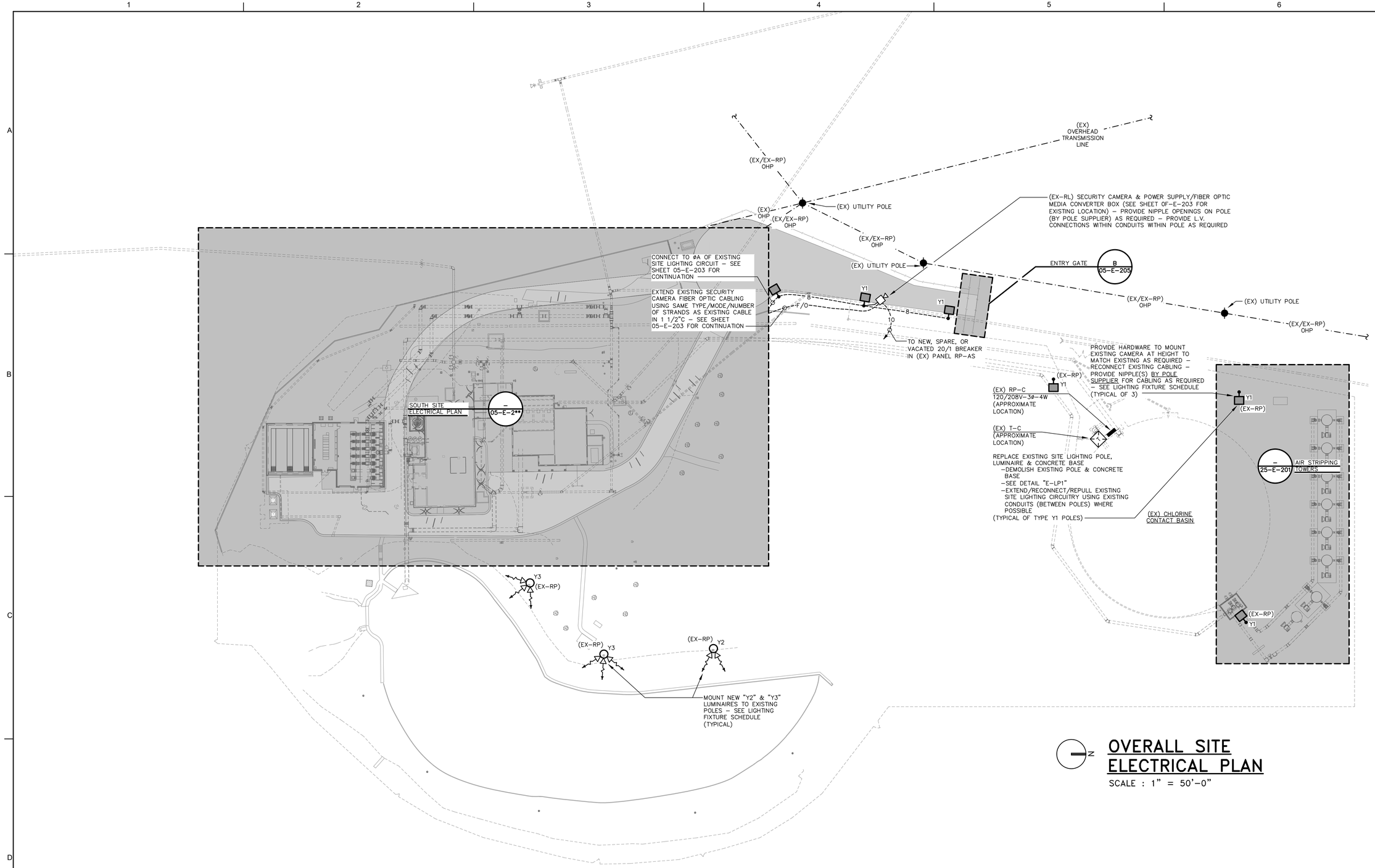

N

OVERALL SITE ELECTRICAL PLAN

SCALE : 1" = 50'-0"

ALABAMA LICENSED No. 27420 PROFESSIONAL ENGINEER PHILIP D. BLACK

9/18/2024

NO.	DATE	REVISION	BY	APVD

DSGN ZJG | DR ZJG | CHK PDB | APVD PDB

PAUL B. KREBS WATER TREATMENT PLANT
IMPROVEMENTS
ANNISTON WATER WORKS & SEWER BOARD
CITY OF ANNISTON, ALABAMA

REUSE OF DOCUMENTS: THIS DOCUMENT, AND THE IDEAS AND DESIGNS INCORPORATED HEREIN, AS AN INSTRUMENT OF PROFESSIONAL SERVICE, IS THE PROPERTY OF JACOBS AND IS NOT TO BE USED, IN WHOLE OR IN PART, FOR ANY OTHER PROJECT WITHOUT THE WRITTEN AUTHORIZATION OF JACOBS.

Jacobs

ELECTRICAL
OVERALL SITE ELECTRICAL PLAN

VERIFY SCALE
BAR IS ONE INCH ON ORIGINAL DRAWING.
0 1"

DATE	SEPTEMBER 2024
PROJ	D3698100
DWG	05-E-201
SHEET	128 of 145

BID DOCUMENTS

JACKSON, RENFRO & ASSOCIATES, INC.
ELECTRICAL ENGINEERING & DESIGN
141 VILLAGE STREET • SUITE 1 • BIRMINGHAM, ALABAMA • 35242
PHILIP D. BLACK, PE
phil@jraae.com
(D) 205.536.7120
(P) 205.995.1078
JRA JOB NO. 221201

©JACOBS 2024. ALL RIGHTS RESERVED.

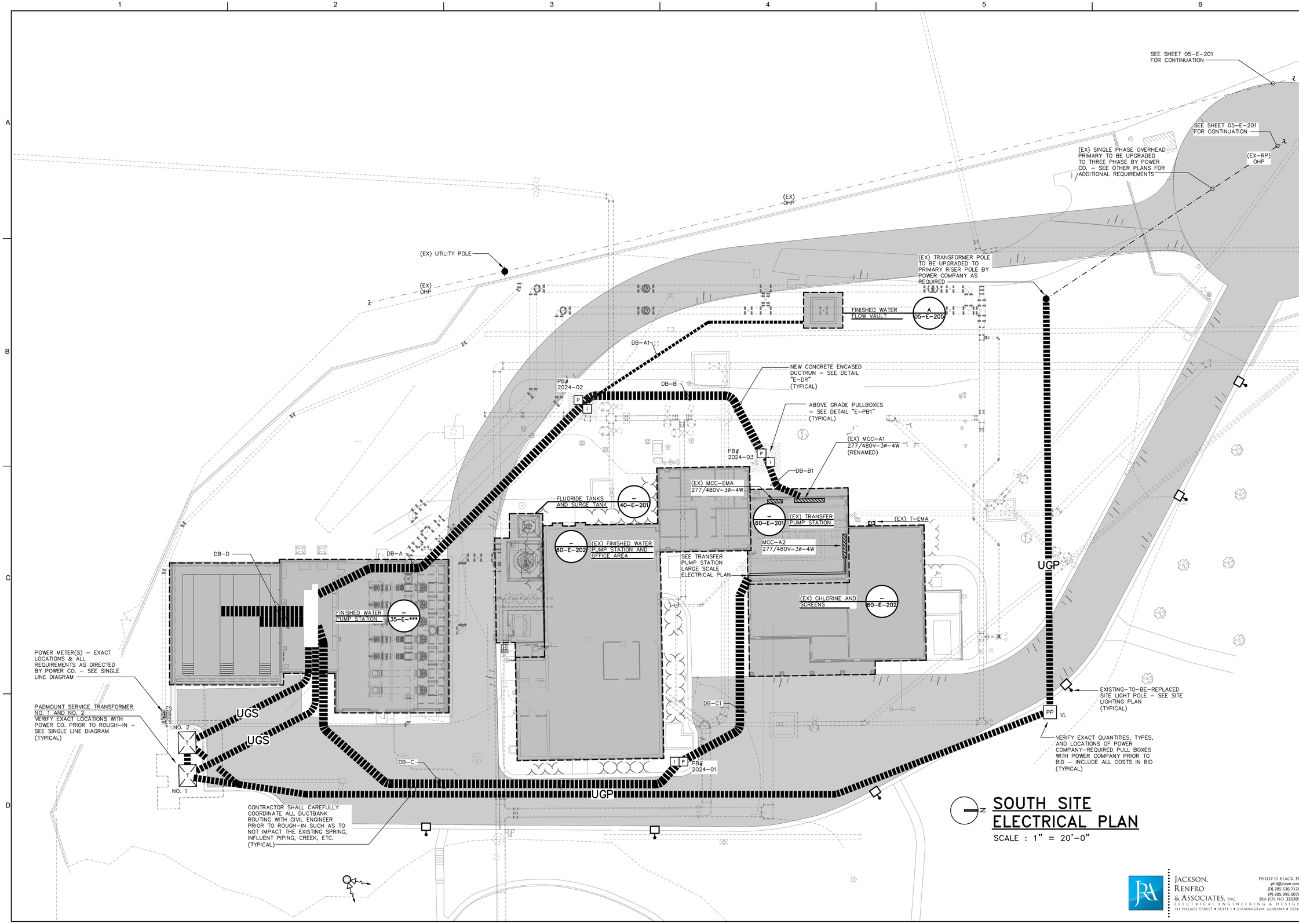

SOUTH SITE ELECTRICAL PLAN

SCALE : 1" = 20'-0"

JACKSON, RENFRO & ASSOCIATES, INC.
ELECTRICAL ENGINEERING & DESIGN
141 VILLAGE STREET • SUITE 1 • BIRMINGHAM, ALABAMA • 35242
JRA JOB NO. 221201
PHILLIP D. BLACK, PE
phil@jraee.com
(O) 205.536.7120
(F) 205.995.1078

ALABAMA LICENSED No. 27420 PROFESSIONAL ENGINEER PHILLIP D. BLACK

9/18/2024

NO.	DATE	REVISION	BY	APVD

DSGN ZJG | DR ZJG | CHK PDB | APVD PDB

PAUL B. KREBS WATER TREATMENT PLANT
IMPROVEMENTS
ANNISTON WATER WORKS & SEWER BOARD
CITY OF ANNISTON, ALABAMA

REUSE OF DOCUMENTS: THIS DOCUMENT, AND THE IDEAS AND DESIGNS INCORPORATED HEREIN, AS AN INSTRUMENT OF PROFESSIONAL SERVICE, IS THE PROPERTY OF JACOBS AND IS NOT TO BE USED, IN WHOLE OR IN PART, FOR ANY OTHER PROJECT WITHOUT THE WRITTEN AUTHORIZATION OF JACOBS.

Jacobs

ELECTRICAL
SOUTH SITE ELECTRICAL PLAN

VERIFY SCALE
BAR IS ONE INCH ON ORIGINAL DRAWING.
0 1"

DATE	SEPTEMBER 2024
PROJ	D3698100
DWG	05-E-202
SHEET	129 of 145

BID DOCUMENTS

©JACOBS 2024. ALL RIGHTS RESERVED.

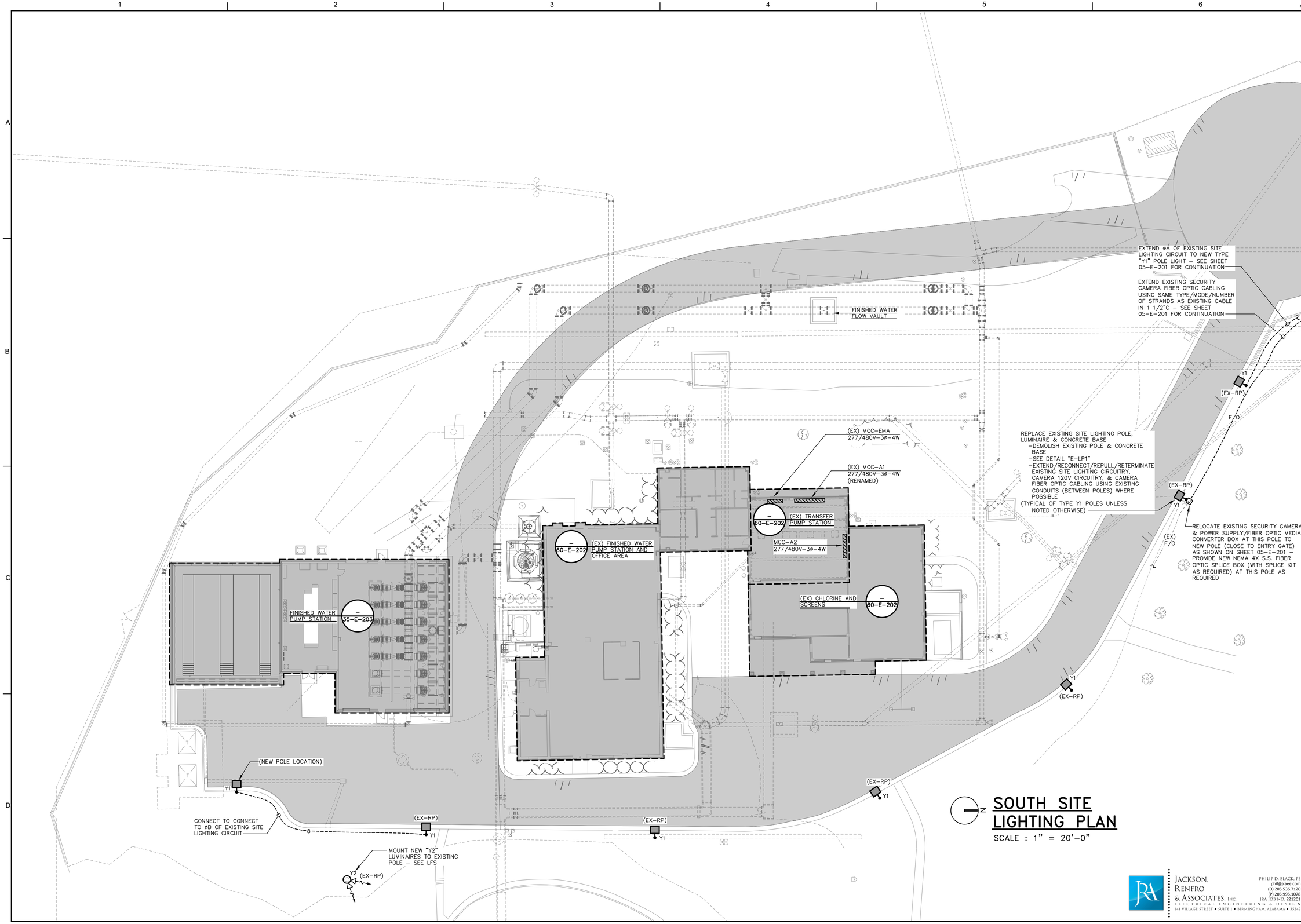

ALABAMA LICENSED No. 27420 PROFESSIONAL ENGINEER PHILIP D. BLACK

9/18/2024

NO.	DATE	REVISION	BY	APVD

DSGN	DR	CHK	APVD
ZJG	ZJG	PDB	PDB

PAUL B. KREBS WATER TREATMENT PLANT
IMPROVEMENTS
ANNISTON WATER WORKS & SEWER BOARD
CITY OF ANNISTON, ALABAMA

REUSE OF DOCUMENTS: THIS DOCUMENT, AND THE IDEAS AND DESIGNS INCORPORATED HEREIN, AS AN INSTRUMENT OF PROFESSIONAL SERVICE, IS THE PROPERTY OF JACOBS AND IS NOT TO BE USED, IN WHOLE OR IN PART, FOR ANY OTHER PROJECT WITHOUT THE WRITTEN AUTHORIZATION OF JACOBS.

Jacobs

ELECTRICAL
SOUTH SITE LIGHTING PLAN

VERIFY SCALE
BAR IS ONE INCH ON ORIGINAL DRAWING.
0 1"

DATE	SEPTEMBER 2024
PROJ	D3698100
DWG	05-E-203
SHEET	130 of 145

BID DOCUMENTS

JACKSON, RENFRO & ASSOCIATES, INC.
ELECTRICAL ENGINEERING & DESIGN
141 VILLAGE STREET • SUITE 1 • BIRMINGHAM, ALABAMA • 35242
PHILIP D. BLACK, PE
phil@jraee.com
(D) 205.536.7120
(P) 205.995.1078
JRA JOB NO. 221201

©JACOBS 2024. ALL RIGHTS RESERVED.

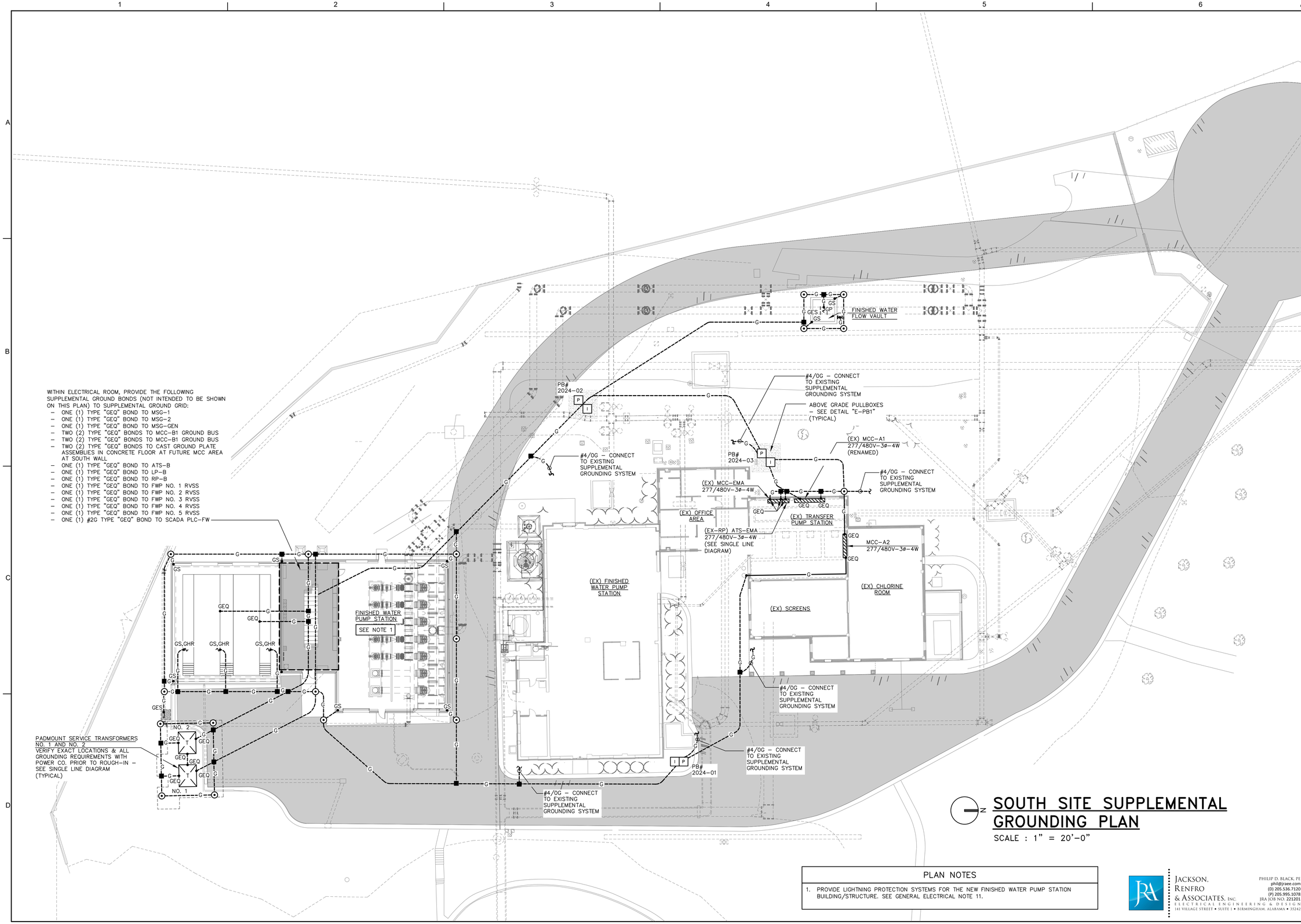

SOUTH SITE SUPPLEMENTAL GROUNDING PLAN

SCALE : 1" = 20'–0"

PLAN NOTES

1. PROVIDE LIGHTNING PROTECTION SYSTEMS FOR THE NEW FINISHED WATER PUMP STATION BUILDING/STRUCTURE. SEE GENERAL ELECTRICAL NOTE 11.

JACKSON, RENFRO & ASSOCIATES, INC.
ELECTRICAL ENGINEERING & DESIGN
141 VILLAGE STREET • SUITE 1 • BIRMINGHAM, ALABAMA • 35242
PHILIP D. BLACK, PE
phil@jraee.com
(D) 205.536.7120
(P) 205.995.1078
JRA JOB NO. 221201

ALABAMA LICENSED No. 27420 PROFESSIONAL ENGINEER PHILIP D. BLACK
9/18/2024

NO.	DATE	REVISION	BY	APVD

DSGN	DR	CHK	APVD
ZJG	ZJG	PDB	PDB

PAUL B. KREBS WATER TREATMENT PLANT IMPROVEMENTS
ANNISTON WATER WORKS & SEWER BOARD
CITY OF ANNISTON, ALABAMA

Jacobs

ELECTRICAL
SOUTH SITE SUPPLEMENTAL GROUNDING PLAN

REUSE OF DOCUMENTS: THIS DOCUMENT, AND THE IDEAS AND DESIGNS INCORPORATED HEREIN, AS AN INSTRUMENT OF PROFESSIONAL SERVICE, IS THE PROPERTY OF JACOBS AND IS NOT TO BE USED, IN WHOLE OR IN PART, FOR ANY OTHER PROJECT WITHOUT THE WRITTEN AUTHORIZATION OF JACOBS.

VERIFY SCALE
BAR IS ONE INCH ON ORIGINAL DRAWING.
0 1"

DATE	SEPTEMBER 2024
PROJ	D3698100
DWG	05-E-204
SHEET	131 of 145

BID DOCUMENTS

©JACOBS 2024. ALL RIGHTS RESERVED.

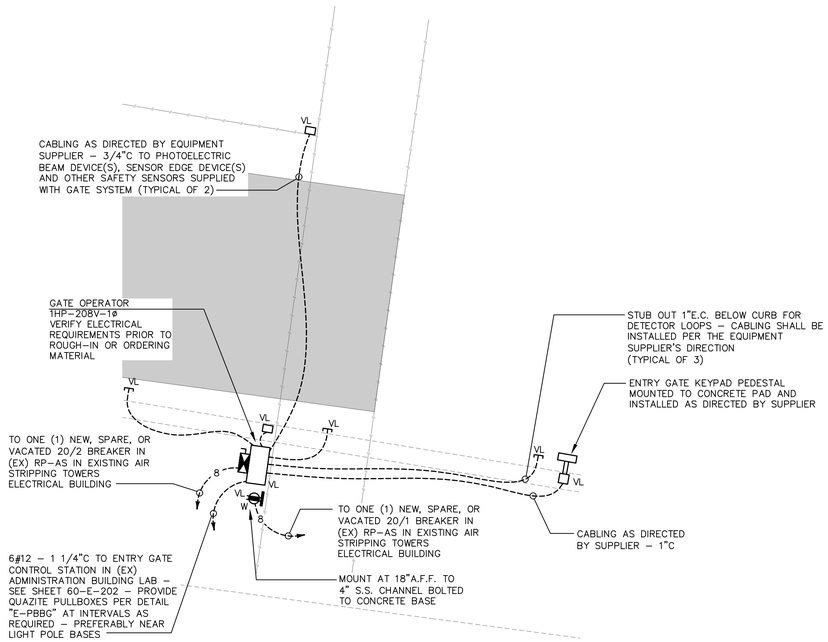

ENTRY GATE ELECTRICAL PLAN

B / 05-E-205

SCALE : 1/8" = 1'-0"

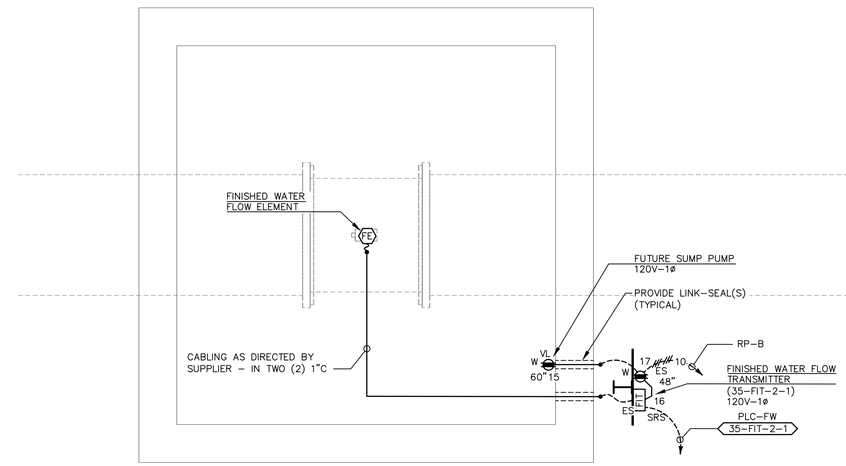

FINISHED WATER FLOW VAULT ELECTRICAL PLAN

A / 05-E-205

SCALE : 1/2" = 1'-0"

PLAN NOTES

1. VERIFY EXACT LOCATIONS AND ELECTRICAL REQUIREMENTS FOR ENTIRE ENTRANCE GATE SYSTEM WITH SUPPLIER PRIOR TO ROUGH-IN. SEE SPECIFICATION SECTION 32 31 13 FOR ADDITIONAL REQUIREMENTS.
2. INSTALLATION & START-UP SERVICES OF ENTRY GATE CONTROLLER SHALL BE PROVIDED BY A FACTORY-TRAINED TECHNICIAN. ALL COMPONENTS SHALL BE PROVIDED AS REQUIRED FOR A FULLY-FUNCTIONAL SYSTEM.
3. CONTRACTOR SHALL VERIFY ALL ELECTRICAL CONNECTION REQUIREMENTS (POWER & LOW VOLTAGE) OF GATE SYSTEM WITH SYSTEM SUPPLIER PRIOR TO ROUGH-IN.
4. EACH GATE KEYPAD CONTROLLER SYSTEM SHALL BE PROVIDED COMPLETE WITH KEYPAD AND ALL PROGRAMMING/ACCESSORIES AS REQUIRED FOR A COMPLETE, FULLY-FUNCTIONAL SYSTEM. SEE SPECIFICATIONS FOR ADDITIONAL REQUIREMENTS.

JACKSON, RENFRO & ASSOCIATES, INC.
ELECTRICAL ENGINEERING & DESIGN
141 VILLAGE STREET • SUITE I • BIRMINGHAM, ALABAMA • 35242
PHILIP D. BLACK, PE
phil@jraae.com
(D) 205.536.7120
(P) 205.995.1078
JRA JOB NO. 221201

ALABAMA LICENSED No. 27420 PROFESSIONAL ENGINEER PHILIP D. BLACK

9/18/2024

NO.	DATE	REVISION	BY	APVD

DSGN ZJG | DR ZJG | CHK PDB | APVD PDB

PAUL B. KREBS WATER TREATMENT PLANT
IMPROVEMENTS
ANNISTON WATER WORKS & SEWER BOARD
CITY OF ANNISTON, ALABAMA

REUSE OF DOCUMENTS: THIS DOCUMENT, AND THE IDEAS AND DESIGNS INCORPORATED HEREIN, AS AN INSTRUMENT OF PROFESSIONAL SERVICE, IS THE PROPERTY OF JACOBS AND IS NOT TO BE USED, IN WHOLE OR IN PART, FOR ANY OTHER PROJECT WITHOUT THE WRITTEN AUTHORIZATION OF JACOBS.

Jacobs

ELECTRICAL
FINISHED WATER FLOW VAULT AND ENTRY GATE ELECTRICAL PLANS

VERIFY SCALE
BAR IS ONE INCH ON ORIGINAL DRAWING.
0 1"

DATE	SEPTEMBER 2024
PROJ	D3698100
DWG	05-E-205
SHEET	132 of 145

BID DOCUMENTS

©JACOBS 2024. ALL RIGHTS RESERVED.

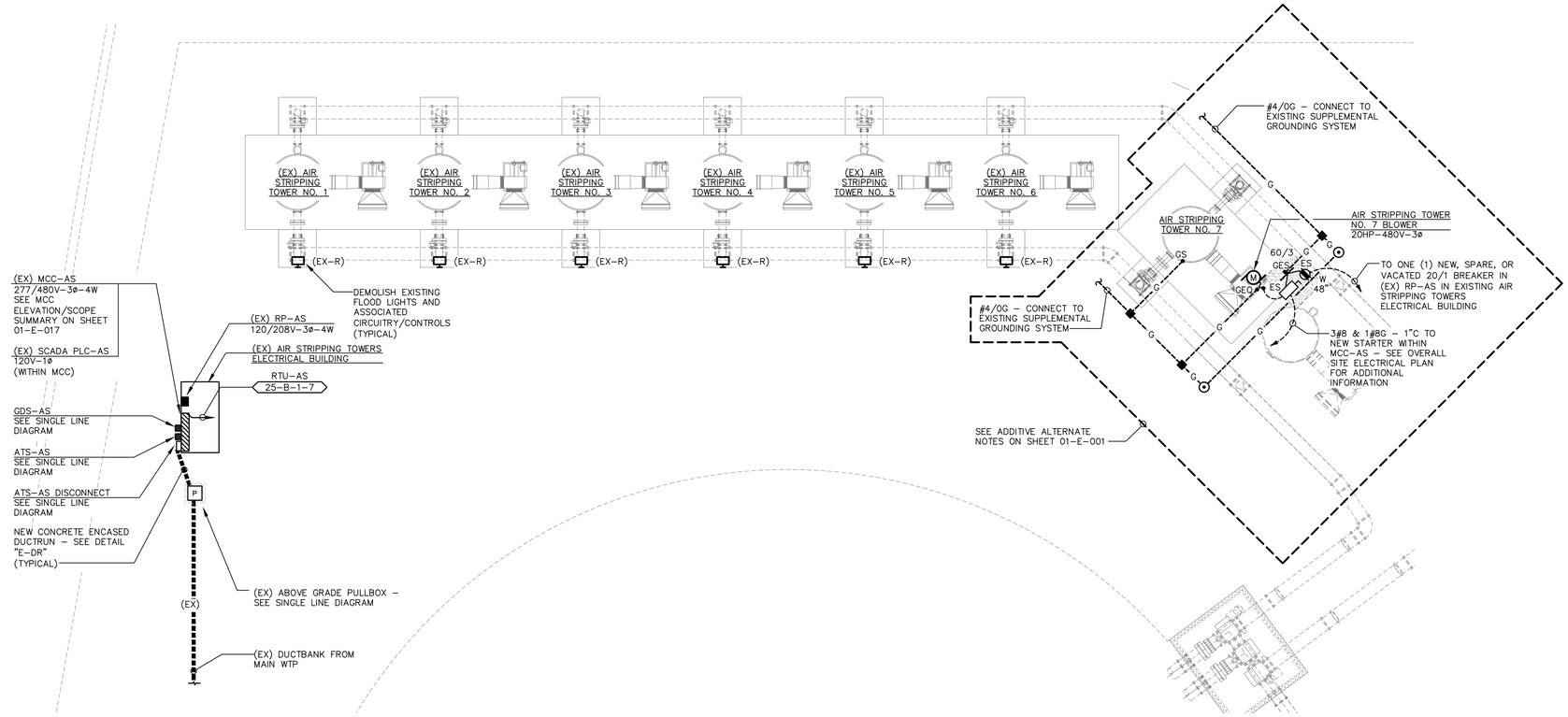

N

AIR STRIPPING TOWERS ELECTRICAL PLAN

SCALE : 1" = 15'-0"

JACKSON, RENFRO & ASSOCIATES, INC.
ELECTRICAL ENGINEERING & DESIGN
141 VILLAGE STREET • SUITE 1 • BIRMINGHAM, ALABAMA • 35242
PHILIP D. BLACK, PE
phil@jraee.com
(D) 205.536.7120
(P) 205.995.1078
JRA JOB NO. 221201

ALABAMA LICENSED No. 27420 PROFESSIONAL ENGINEER PHILIP D. BLACK

9/18/2024

NO.	DATE	REVISION	BY	APVD

DSGN	DR	CHK	APVD
ZJG	ZJG	ZJG	PDB

PAUL B. KREBS WATER TREATMENT PLANT
IMPROVEMENTS
ANNISTON WATER WORKS & SEWER BOARD
CITY OF ANNISTON, ALABAMA

REUSE OF DOCUMENTS: THIS DOCUMENT, AND THE IDEAS AND DESIGNS INCORPORATED HEREIN, AS AN INSTRUMENT OF PROFESSIONAL SERVICE, IS THE PROPERTY OF JACOBS AND IS NOT TO BE USED, IN WHOLE OR IN PART, FOR ANY OTHER PROJECT WITHOUT THE WRITTEN AUTHORIZATION OF JACOBS.

Jacobs

ELECTRICAL
AIR STRIPPING TOWERS ELECTRICAL PLAN

VERIFY SCALE
BAR IS ONE INCH ON ORIGINAL DRAWING.
0 1"

DATE	SEPTEMBER 2024
PROJ	D3698100
DWG	25-E-201
SHEET	133 of 145

BID DOCUMENTS

©JACOBS 2024. ALL RIGHTS RESERVED.

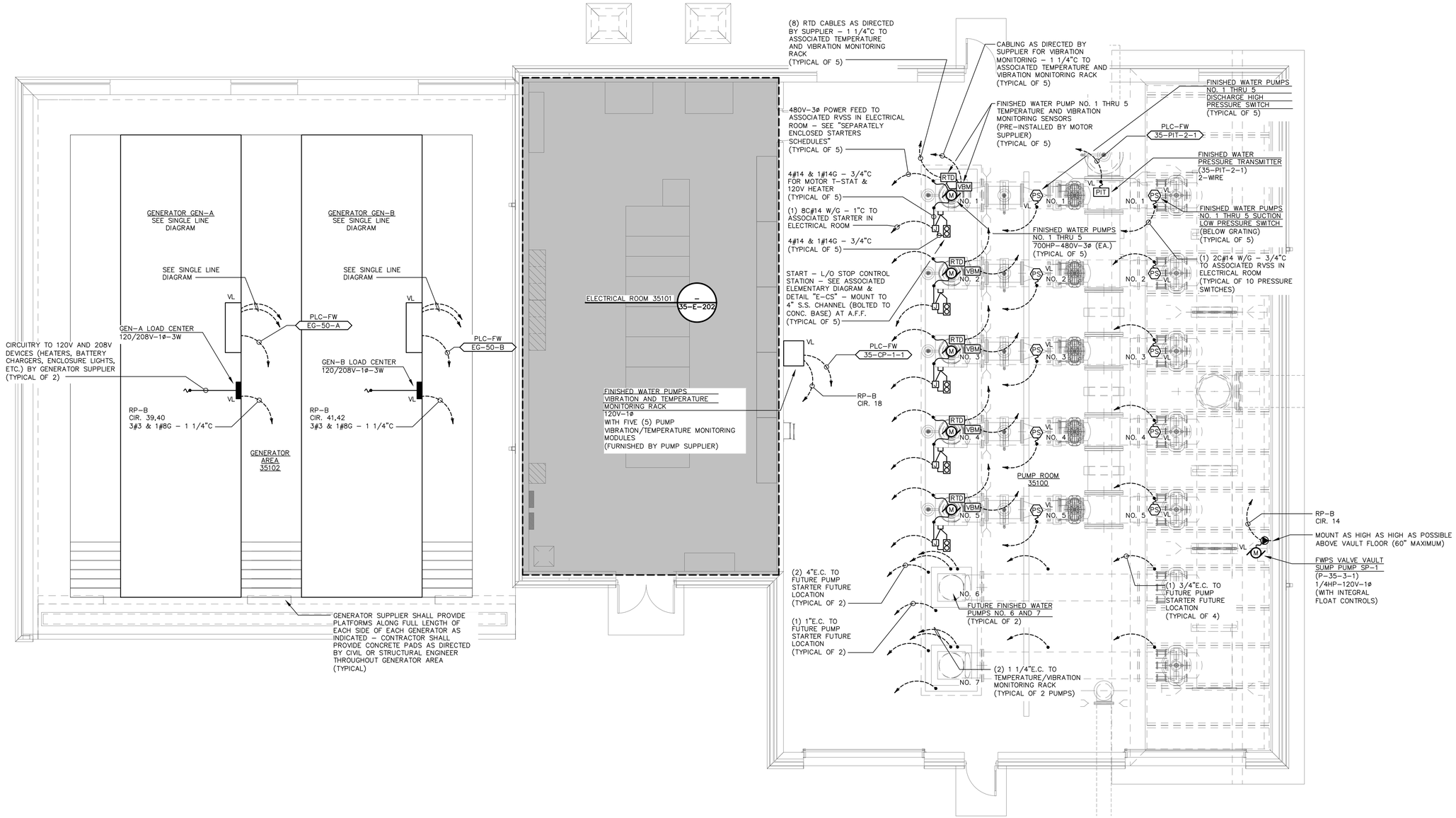

FINISHED WATER PUMP STATION PROCESS ELECTRICAL PLAN

SCALE : 3/16" = 1'-0"

JACKSON, RENFRO & ASSOCIATES, INC.
ELECTRICAL ENGINEERING & DESIGN
141 VILLAGE STREET • SUITE 1 • BIRMINGHAM, ALABAMA • 35242
PHILIP D. BLACK, PE
phil@jraee.com
(D) 205.536.7120
(P) 205.995.1078
JRA JOB NO. 221201

ALABAMA LICENSED No. 27420 PROFESSIONAL ENGINEER PHILIP D. BLACK
9/18/2024

NO.	DATE	REVISION	BY	APVD

DSGN ZJG | DR ZJG | CHK PDB | APVD PDB

PAUL B. KREBS WATER TREATMENT PLANT
IMPROVEMENTS
ANNISTON WATER WORKS & SEWER BOARD
CITY OF ANNISTON, ALABAMA

REUSE OF DOCUMENTS: THIS DOCUMENT, AND THE IDEAS AND DESIGNS INCORPORATED HEREIN, AS AN INSTRUMENT OF PROFESSIONAL SERVICE, IS THE PROPERTY OF JACOBS AND IS NOT TO BE USED, IN WHOLE OR IN PART, FOR ANY OTHER PROJECT WITHOUT THE WRITTEN AUTHORIZATION OF JACOBS.

Jacobs

ELECTRICAL
FINISHED WATER PUMP STATION
PROCESS ELECTRICAL PLAN

VERIFY SCALE
BAR IS ONE INCH ON ORIGINAL DRAWING
0 1"

DATE	SEPTEMBER 2024
PROJ	D3698100
DWG	35-E-201
SHEET	134 of 145

BID DOCUMENTS

©JACOBS 2024. ALL RIGHTS RESERVED.

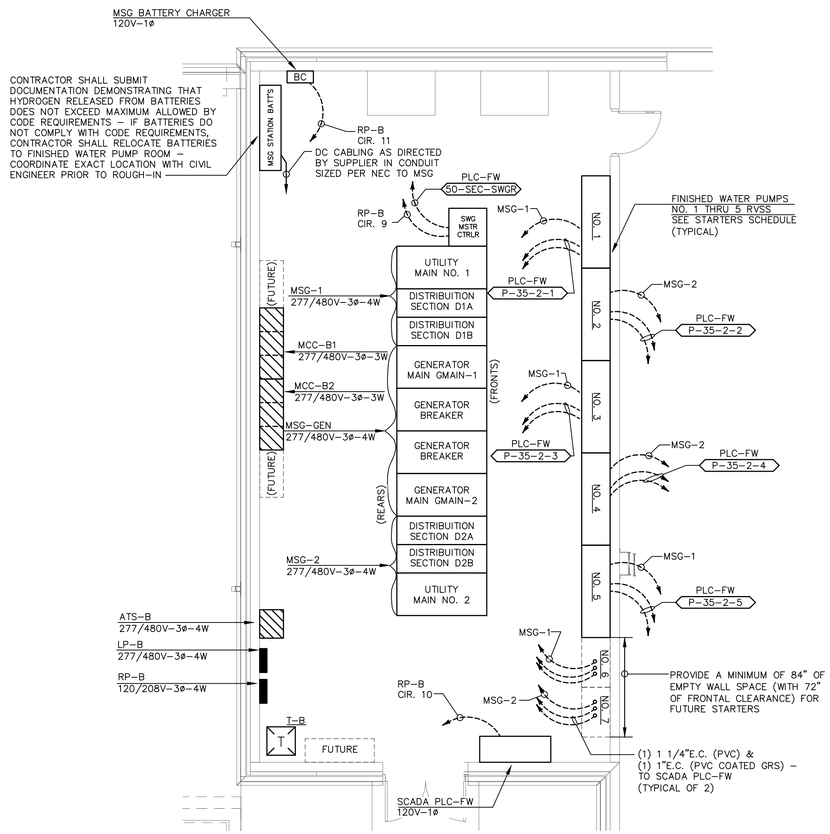

N

FINISHED WATER PUMP STATION ELECTRICAL ROOM LARGE SCALE ELECTRICAL PLAN

SCALE : 3/16 = 1'-0"

ALABAMA LICENSED No. 27420 PROFESSIONAL ENGINEER PHILIP D. BLACK

9/18/2024

NO.	DATE	REVISION	BY	APVD

DSGN	DR	CHK	APVD
ZJG	ZJG	PDB	PDB

PAUL B. KREBS WATER TREATMENT PLANT
IMPROVEMENTS
ANNISTON WATER WORKS & SEWER BOARD
CITY OF ANNISTON, ALABAMA

REUSE OF DOCUMENTS: THIS DOCUMENT, AND THE IDEAS AND DESIGNS INCORPORATED HEREIN, AS AN INSTRUMENT OF PROFESSIONAL SERVICE, IS THE PROPERTY OF JACOBS AND IS NOT TO BE USED, IN WHOLE OR IN PART, FOR ANY OTHER PROJECT WITHOUT THE WRITTEN AUTHORIZATION OF JACOBS.

Jacobs

ELECTRICAL
FINISHED WATER PUMP STATION
ELECTRICAL ROOM
LARGE SCALE ELECTRICAL PLAN

VERIFY SCALE
BAR IS ONE INCH ON ORIGINAL DRAWING.
0 1"

DATE	SEPTEMBER 2024
PROJ	D3698100
DWG	35-E-202
SHEET	135 of 145

BID DOCUMENTS

JACKSON, RENFRO & ASSOCIATES, INC.
ELECTRICAL ENGINEERING & DESIGN
141 VILLAGE STREET • SUITE 1 • BIRMINGHAM, ALABAMA • 35242
PHILIP D. BLACK, PE
phil@jraee.com
(D) 205.536.7120
(P) 205.995.1078
JRA JOB NO. 221201

©JACOBS 2024. ALL RIGHTS RESERVED.

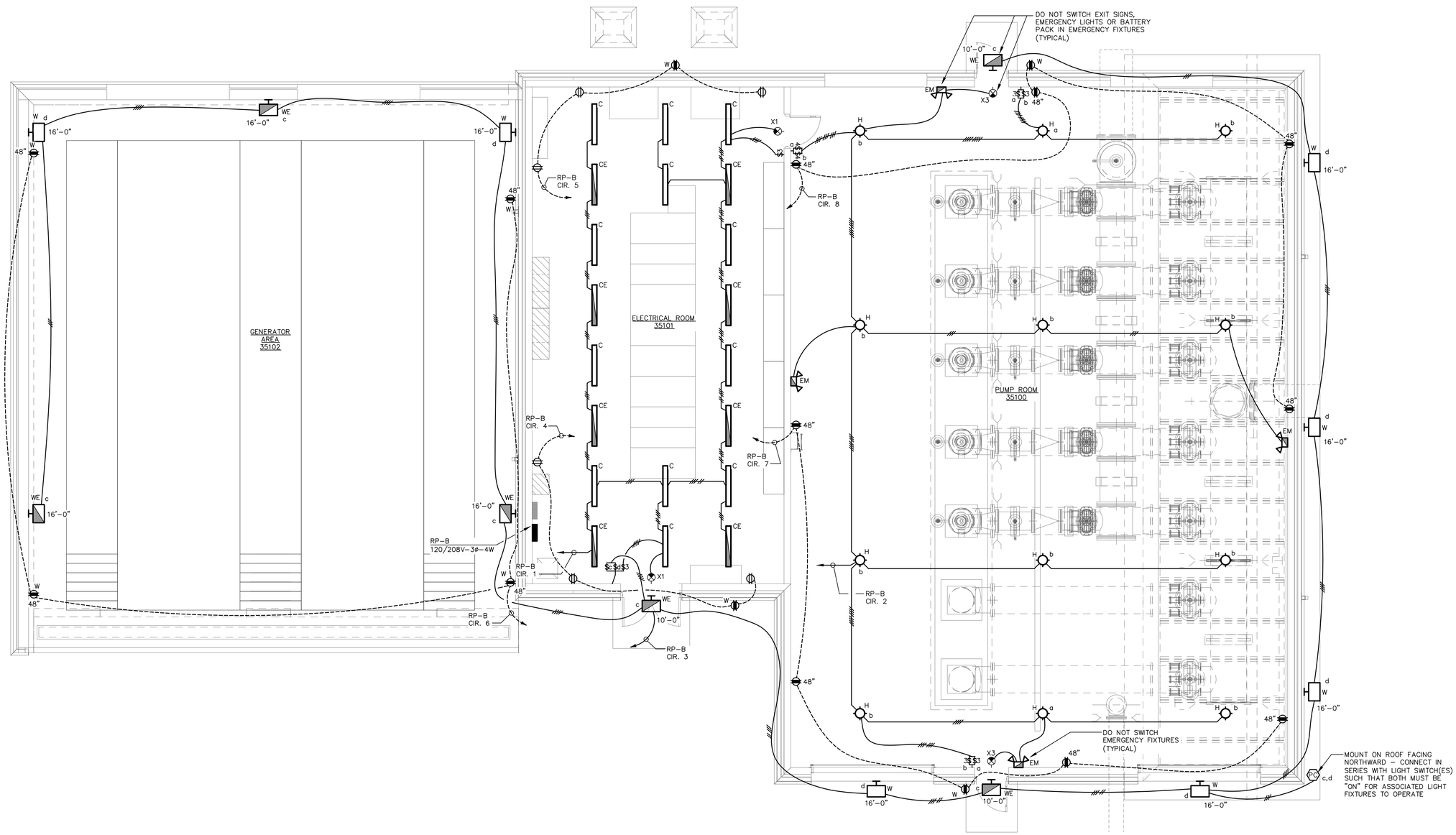

FINISHED WATER PUMP STATION LIGHTING AND RECEPTACLE PLAN

SCALE : 3/16" = 1'-0"

JACKSON, RENFRO & ASSOCIATES, INC.
ELECTRICAL ENGINEERING & DESIGN
141 VILLAGE STREET • SUITE 1 • BIRMINGHAM, ALABAMA • 35242
PHILIP D. BLACK, PE
phil@jraae.com
(D) 205.536.7120
(P) 205.995.1078
JRA JOB NO. 221201

ALABAMA LICENSED No. 27420 PROFESSIONAL ENGINEER PHILIP D. BLACK

9/18/2024

NO.	DATE	REVISION	BY	APVD

DSGN ZJG | DR ZJG | CHK ZJG | APVD PDB | PDB

PAUL B. KREBS WATER TREATMENT PLANT IMPROVEMENTS
ANNISTON WATER WORKS & SEWER BOARD
CITY OF ANNISTON, ALABAMA

REUSE OF DOCUMENTS: THIS DOCUMENT, AND THE IDEAS AND DESIGNS INCORPORATED HEREIN, AS AN INSTRUMENT OF PROFESSIONAL SERVICE, IS THE PROPERTY OF JACOBS AND IS NOT TO BE USED, IN WHOLE OR IN PART, FOR ANY OTHER PROJECT WITHOUT THE WRITTEN AUTHORIZATION OF JACOBS.

Jacobs

ELECTRICAL
FINISHED WATER PUMP STATION LIGHTING AND RECEPTACLE PLAN

VERIFY SCALE
BAR IS ONE INCH ON ORIGINAL DRAWING.
0 1"

DATE	SEPTEMBER 2024
PROJ	D3698100
DWG	35-E-203
SHEET	136 of 145

BID DOCUMENTS

©JACOBS 2024. ALL RIGHTS RESERVED.

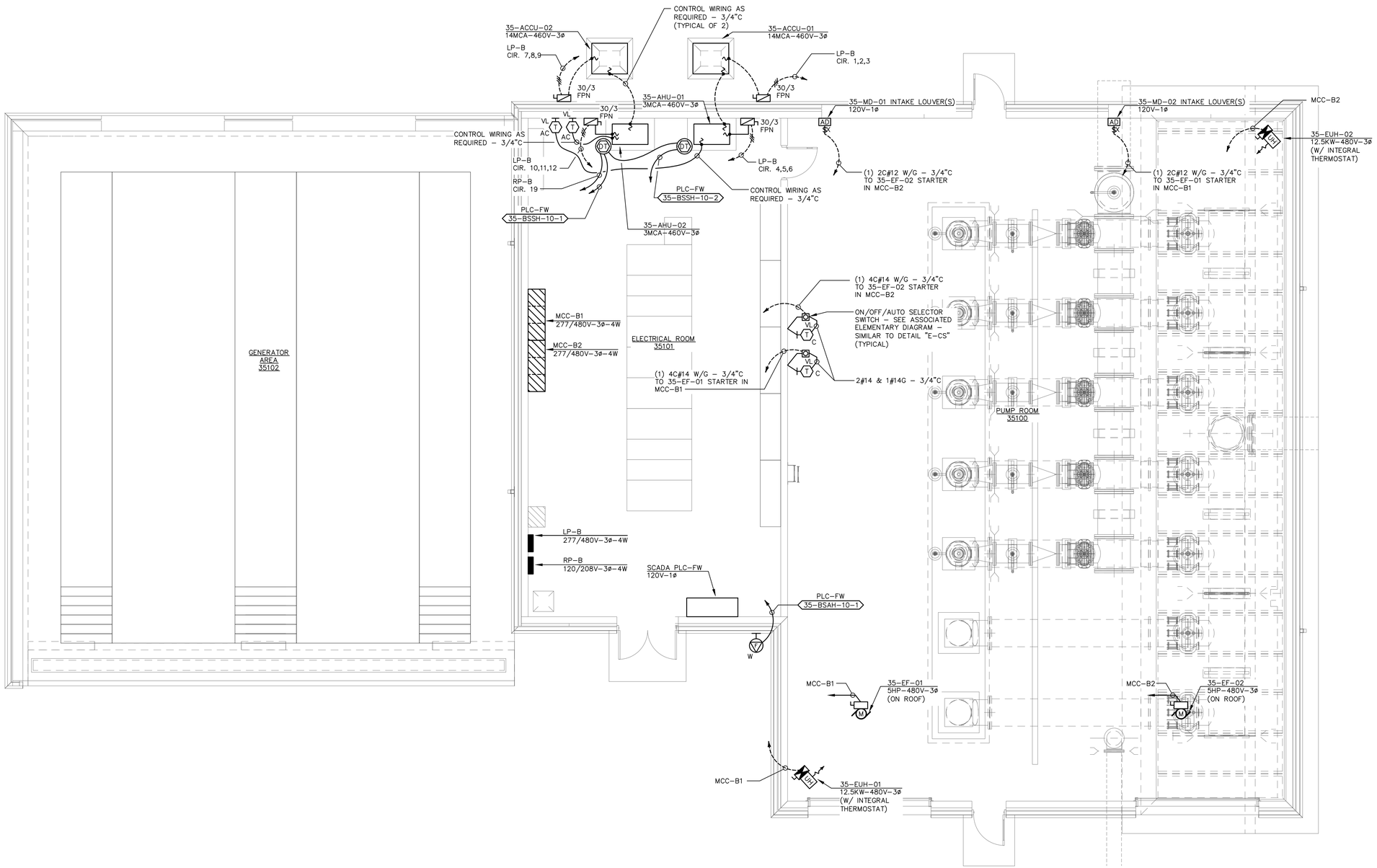

FINISHED WATER PUMP STATION HVAC ELECTRICAL PLAN

SCALE : 3/16" = 1'-0"

JACKSON, RENFRO & ASSOCIATES, INC.
ELECTRICAL ENGINEERING & DESIGN
141 VILLAGE STREET • SUITE I • BIRMINGHAM, ALABAMA • 35242
PHILIP D. BLACK, PE
phil@jrae.com
(D) 205.536.7120
(P) 205.995.1078
JRA JOB NO. 221201

ALABAMA LICENSED No. 27420 PROFESSIONAL ENGINEER PHILIP D. BLACK
9/18/2024

NO.	DATE	REVISION	BY	APVD

DSGN	DR	CHK	APVD
ZJG	ZJG	PDB	PDB

PAUL B. KREBS WATER TREATMENT PLANT
IMPROVEMENTS
ANNISTON WATER WORKS & SEWER BOARD
CITY OF ANNISTON, ALABAMA

REUSE OF DOCUMENTS: THIS DOCUMENT, AND THE IDEAS AND DESIGNS INCORPORATED HEREIN, AS AN INSTRUMENT OF PROFESSIONAL SERVICE, IS THE PROPERTY OF JACOBS AND IS NOT TO BE USED, IN WHOLE OR IN PART, FOR ANY OTHER PROJECT WITHOUT THE WRITTEN AUTHORIZATION OF JACOBS.

Jacobs

ELECTRICAL
FINISHED WATER PUMP STATION
HVAC ELECTRICAL PLAN

VERIFY SCALE
BAR IS ONE INCH ON ORIGINAL DRAWING.
0 1"

DATE	SEPTEMBER 2024
PROJ	D3698100
DWG	35-E-204
SHEET	137 of 145

BID DOCUMENTS

©JACOBS 2024. ALL RIGHTS RESERVED.

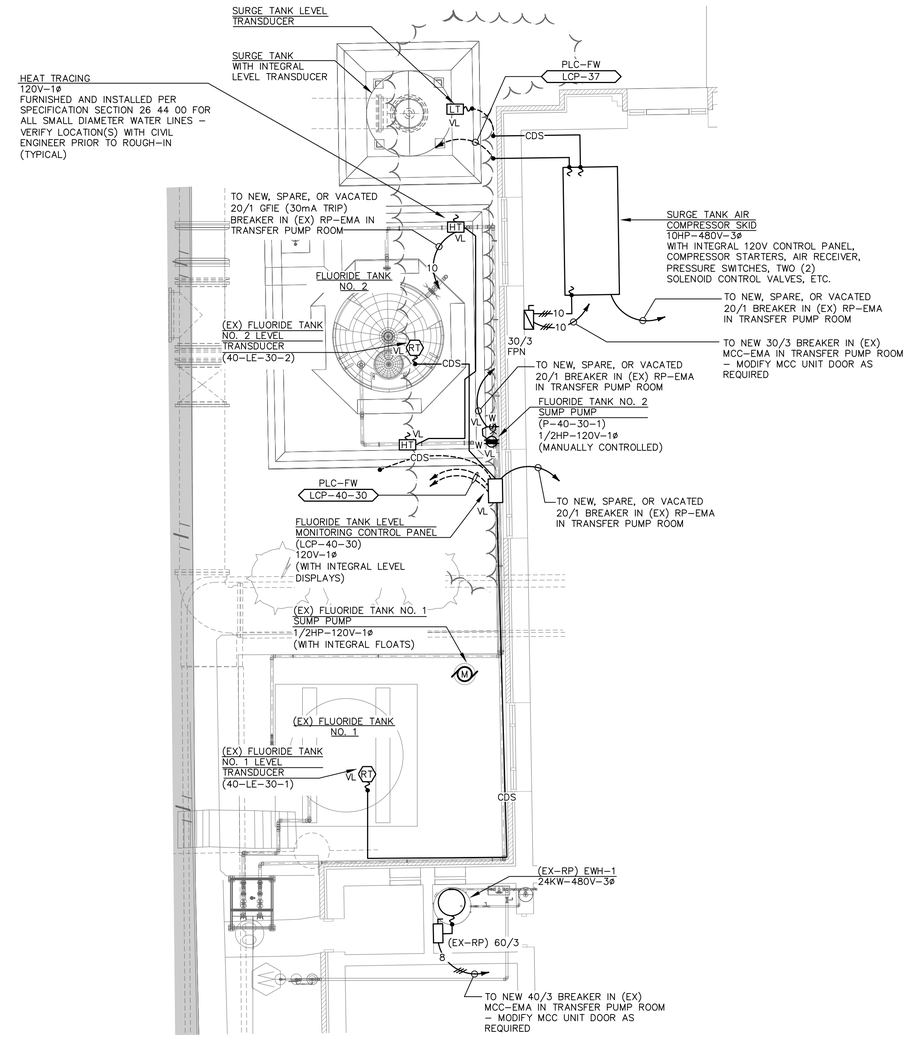

FLUORIDE TANKS ELECTRICAL PLAN

SCALE : 3/16" = 1'–0"

JACKSON, RENFRO & ASSOCIATES, INC
ELECTRICAL ENGINEERING & DESIGN
141 VILLAGE STREET • SUITE 1 • BIRMINGHAM, ALABAMA • 35242
PHILIP D. BLACK, PE
phil@jraee.com
(O) 205.536.7120
(P) 205.995.1078
JRA JOB NO. 221201

ALABAMA LICENSED No. 27420 PROFESSIONAL ENGINEER PHILIP D. BLACK

9/18/2024

NO.	DATE	REVISION	BY	APVD
DSGN	ZJG	DR	ZJG	CHK	PDB	APVD	PDB

PAUL B. KREBS WATER TREATMENT PLANT
IMPROVEMENTS
ANNISTON WATER WORKS & SEWER BOARD
CITY OF ANNISTON, ALABAMA

Jacobs

ELECTRICAL
FLUORIDE TANKS
ELECTRICAL PLAN

REUSE OF DOCUMENTS: THIS DOCUMENT, AND THE IDEAS AND DESIGNS INCORPORATED HEREIN, AS AN INSTRUMENT OF PROFESSIONAL SERVICE, IS THE PROPERTY OF JACOBS AND IS NOT TO BE USED, IN WHOLE OR IN PART, FOR ANY OTHER PROJECT WITHOUT THE WRITTEN AUTHORIZATION OF JACOBS.

BID DOCUMENTS

VERIFY SCALE
BAR IS ONE INCH ON ORIGINAL DRAWING
0 1"

DATE	SEPTEMBER 2024
PROJ	D3698100
DWG	40-E-201
SHEET	138 of 145

©JACOBS 2024. ALL RIGHTS RESERVED.

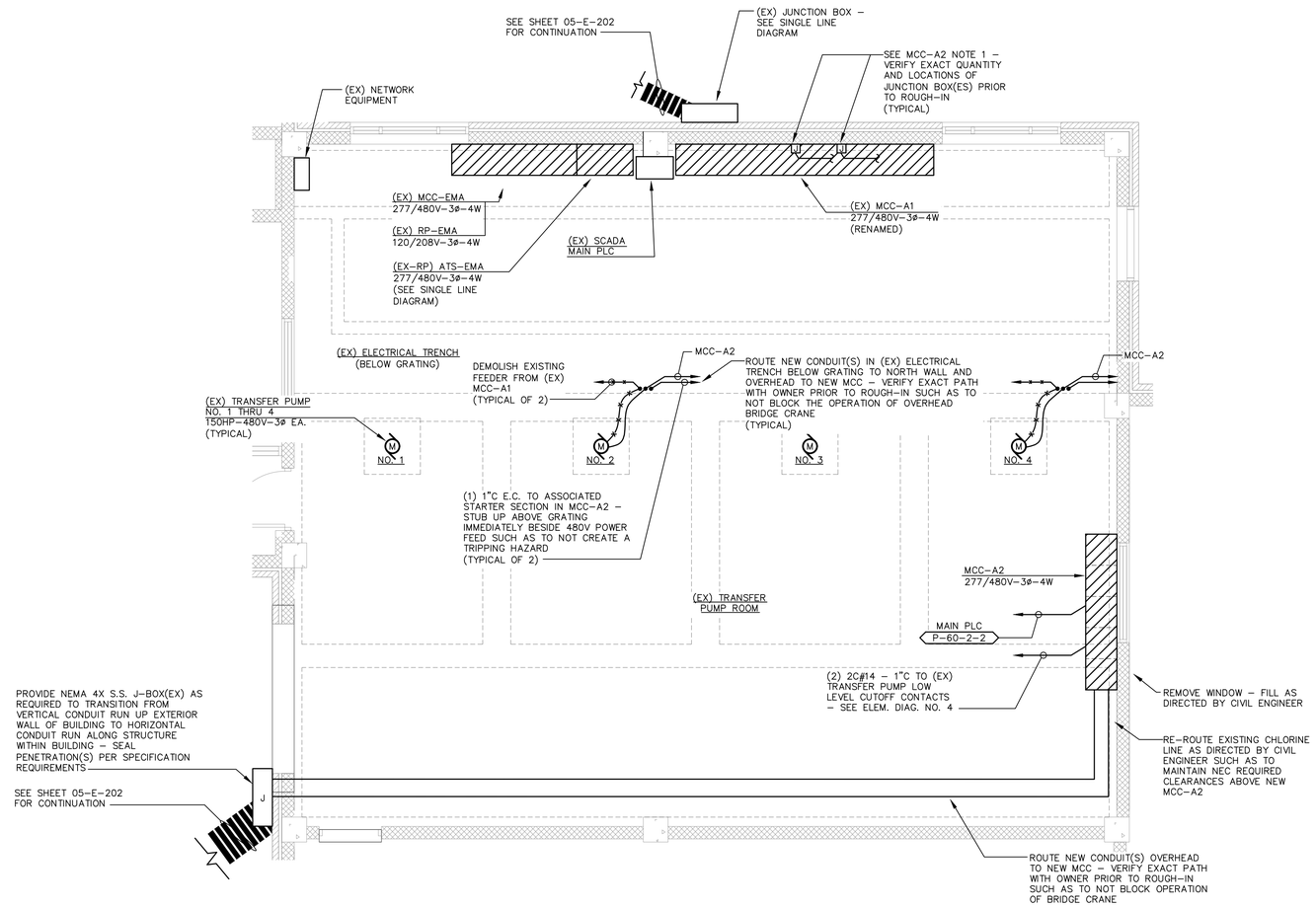

TRANSFER PUMP ROOM ELECTRICAL PLAN

SCALE : 1/4" = 1'-0"

JACKSON, RENFRO & ASSOCIATES, INC.
ELECTRICAL ENGINEERING & DESIGN
141 VILLAGE STREET • SUITE I • BIRMINGHAM, ALABAMA • 35242
PHILIP D. BLACK, PE
phil@jrae.com
(D) 205.536.7120
(P) 205.995.1078
JRA JOB NO. 221201

ALABAMA LICENSED No. 27420 PROFESSIONAL ENGINEER PHILIP D. BLACK

9/18/2024

NO.	DATE	REVISION	BY	APVD
DSGN	ZJG	DR ZJG / CHK PDB	APVD PDB	

PAUL B. KREBS WATER TREATMENT PLANT
IMPROVEMENTS
ANNISTON WATER WORKS & SEWER BOARD
CITY OF ANNISTON, ALABAMA

Jacobs

ELECTRICAL
TRANSFER PUMP ROOM
ELECTRICAL PLAN

REUSE OF DOCUMENTS: THIS DOCUMENT, AND THE IDEAS AND DESIGNS INCORPORATED HEREIN, AS AN INSTRUMENT OF PROFESSIONAL SERVICE, IS THE PROPERTY OF JACOBS AND IS NOT TO BE USED, IN WHOLE OR IN PART, FOR ANY OTHER PROJECT WITHOUT THE WRITTEN AUTHORIZATION OF JACOBS.

BID DOCUMENTS

VERIFY SCALE
BAR IS ONE INCH ON ORIGINAL DRAWING.
0 1"

DATE	SEPTEMBER 2024
PROJ	D3698100
DWG	60-E-201
SHEET	139 of 145

©JACOBS 2024. ALL RIGHTS RESERVED.

PROJECT INTENT IS THAT ALL LIGHT FIXTURES IN THIS AREA ARE TO BE REPLACED – SEE NOTE 1 – PROVIDE NEW LIGHTING CIRCUITRY & CONTROLS AS INDICATED ON THIS PLAN – IF NO CIRCUITRY IS SHOWN REPLACE FIXTURE IN-PLACE (USING EX CIRCUITRY)

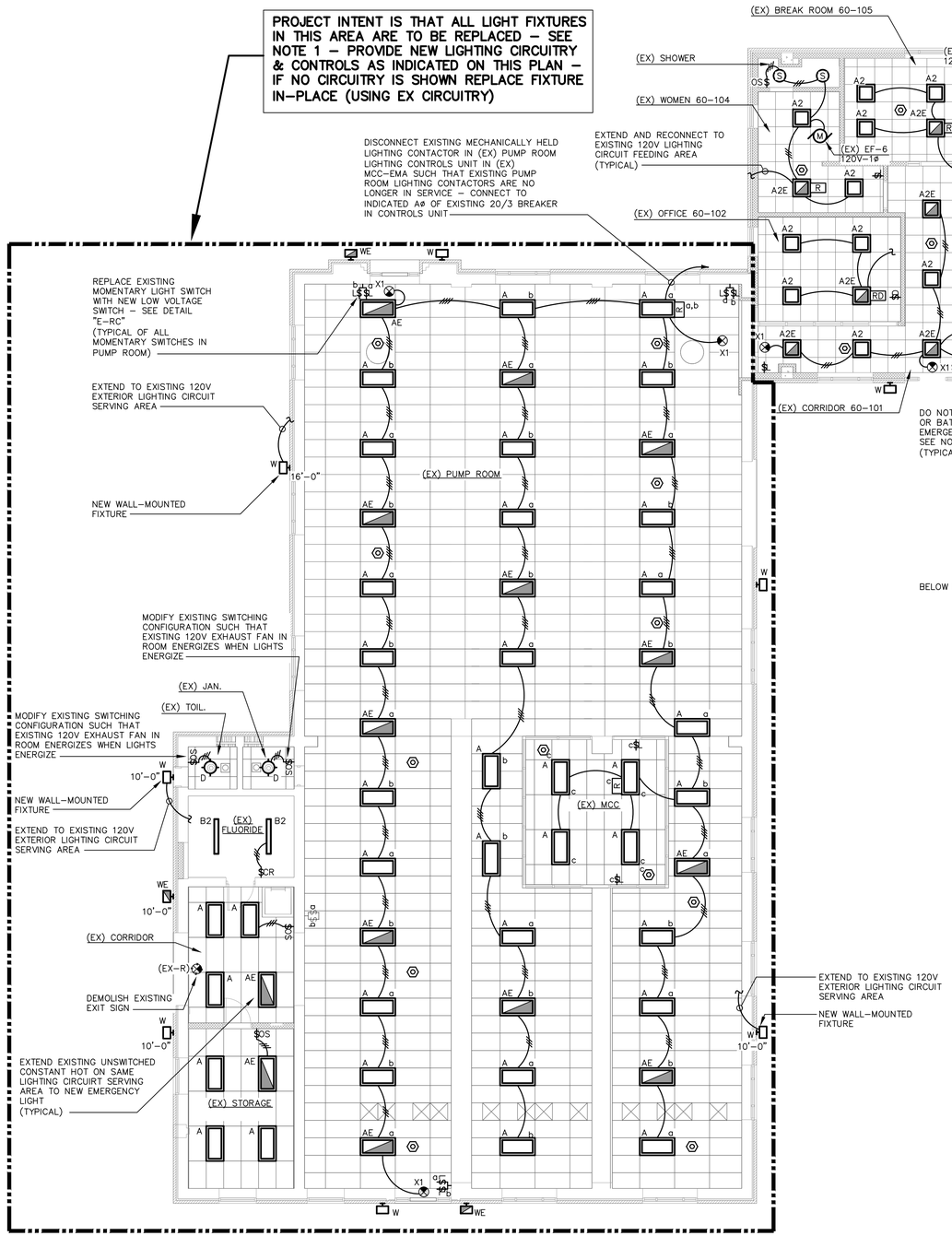

PROJECT INTENT IS THAT ALL LIGHT FIXTURES IN THIS AREA ARE TO BE REPLACED – SEE NOTE 1 – MAINTAIN EXISTING MULTI-LEVEL SWITCHING IN PROCESS ROOMS

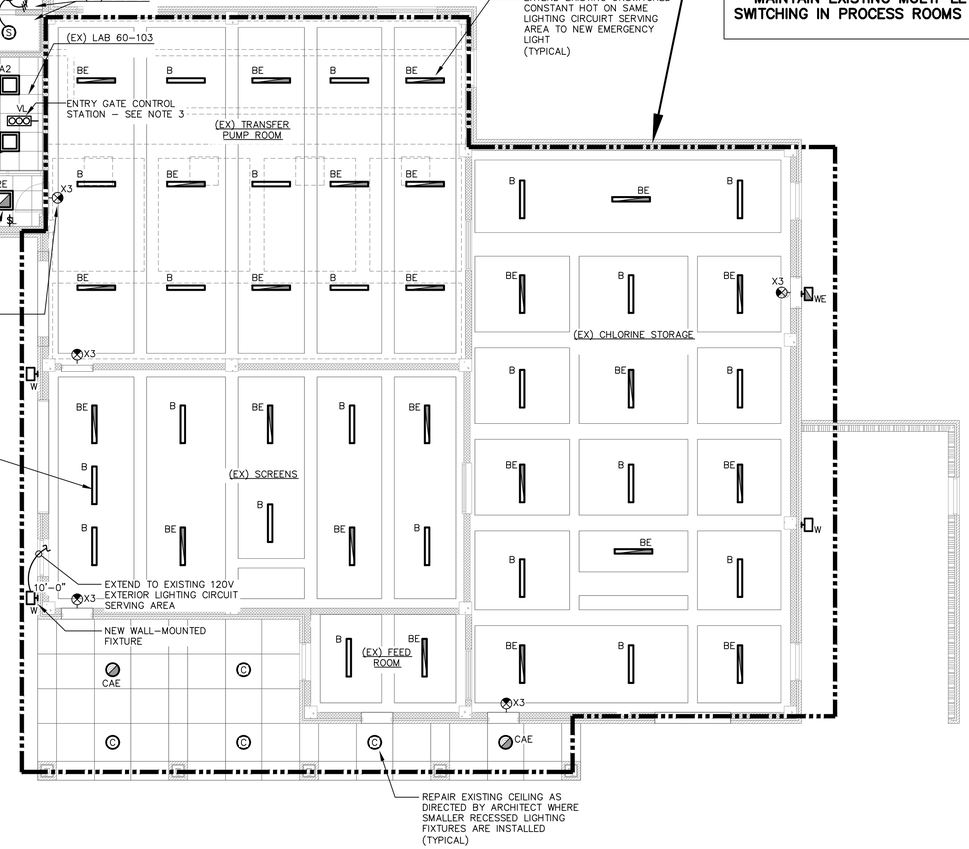

ADMINISTRATION BUILDING LIGHTING PLAN

SCALE : 1/8" = 1'-0"

NOTES THIS SHEET ONLY

1. GENERAL PROJECT INTENT IS TO REPLACE ALL EXISTING LIGHT FIXTURES WITH NEW FIXTURES AS INDICATED ON THIS PLAN.
   A. WHERE NO LIGHTING BRANCH CIRCUITRY IS SHOWN, REPLACE EXISTING FIXTURES IN PLACE AS INDICATED. EXTEND AND RECONNECT EXISTING CIRCUITRY AS REQUIRED TO MAINTAIN EXISTING SWITCHING CONFIGURATION.
   B. WHERE NEW LIGHTING BRANCH CIRCUITRY IS SHOWN, DEMOLISH EXISTING LIGHTING, ASSOCIATED CIRCUITRY, ETC. INSTALL NEW LIGHT FIXTURES, BRANCH CIRCUITRY, CONTROLS, ETC. AS INDICATED ON PLANS. CONTRACTOR MAY AT ITS SOLE DISCRETION REUSE EXISTING CONDUITS WHERE THE EXISTING CONDUITS SATISFY THE NEW CONTRACT REQUIREMENTS. PROVIDE BLANK COVERPLATES OVER EXISTING SWITCH BOXES THAT BECOME OBSOLETE.
   C. PROVIDE UNSWITCHED HOT CONDUCTOR (OF ASSOCIATED LIGHTING BRANCH CIRCUIT) TO ALL EMERGENCY FIXTURES (WITH EM BATTERY PACKS) & EXIT SIGNS.
2. CONTRACTOR SHALL FIELD VERIFY THAT ALL EXISTING LIGHTING BRANCH CIRCUIT VOLTAGES MATCH THE PROPOSED FIXTURE VOLTAGE RATINGS PRIOR TO RELEASING ORDER.
3. PROVIDE SURFACE MOUNTED CONTROL STATION SIMILAR TO DETAIL "E-CS" AS FOLLOWS:
   – 30MM OPERATORS
   – MOMENTARY CONTACT "OPEN" PUSHBUTTON
   – MOMENTARY CONTACT "CLOSED" PUSHBUTTON
   – MAINTAINED CONTACT "HOLD OPEN" SELECTOR SWITCH
   VERIFY ALL PROVISIONS WITH GATE SUPPLIER PRIOR TO ORDERING MATERIALS

JACKSON, RENFRO & ASSOCIATES, INC
ELECTRICAL ENGINEERING & DESIGN
141 VILLAGE STREET • SUITE I • BIRMINGHAM, ALABAMA • 35242
PHILIP D. BLACK, PE
phil@jraee.com
(O) 205.536.7120
(P) 205.995.1078
JRA JOB NO. 221201

ALABAMA LICENSED No. 27420 PROFESSIONAL ENGINEER PHILIP D. BLACK
9/18/2024

NO.	DATE	REVISION	BY	APVD
DSGN	ZJG	DR ZJG	CHK PDB	APVD PDB

PAUL B. KREBS WATER TREATMENT PLANT IMPROVEMENTS
ANNISTON WATER WORKS & SEWER BOARD
CITY OF ANNISTON, ALABAMA

REUSE OF DOCUMENTS: THIS DOCUMENT, AND THE IDEAS AND DESIGNS INCORPORATED HEREIN, AS AN INSTRUMENT OF PROFESSIONAL SERVICE, IS THE PROPERTY OF JACOBS AND IS NOT TO BE USED, IN WHOLE OR IN PART, FOR ANY OTHER PROJECT WITHOUT THE WRITTEN AUTHORIZATION OF JACOBS.

Jacobs

ELECTRICAL
ADMINISTRATION BUILDING LIGHTING PLAN

VERIFY SCALE
BAR IS ONE INCH ON ORIGINAL DRAWING.
0 1"

DATE	SEPTEMBER 2024
PROJ	D3698100
DWG	60-E-202
SHEET	140 of 145

BID DOCUMENTS

©JACOBS 2024. ALL RIGHTS RESERVED.

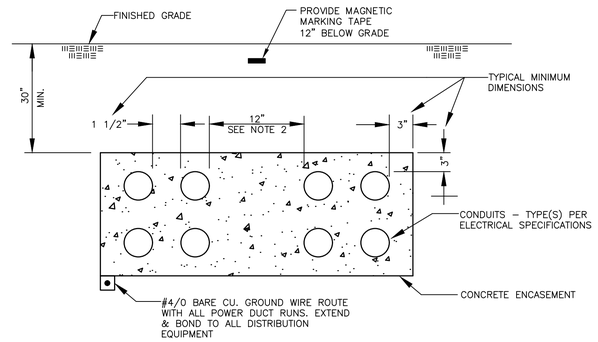

DETAIL "E–DR"
TYPICAL DUCT RUN SECTION
SCALE : NONE

DETAIL NOTES
1. PVC SPACERS SHALL BE INSTALLED AT RECOMMENDED INTERVALS TO SUPPORT AND MAINTAIN SPACING FOR CONDUITS.
2. INSTRUMENTATION CONDUITS SHALL BE SEPARATED FROM POWER/CONTROL CONDUITS BY A MINIMUM OF 12" THROUGHOUT ANY DUCT RUNS.
3. REFER TO DUCTBANK SCHEDULES FOR ADDITIONAL REQUIREMENTS.

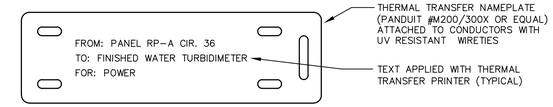

DETAIL "E–CL"
TYPICAL CIRCUIT LABEL
SCALE : NONE

NOTES THIS DETAIL ONLY
1. CIRCUIT LABEL TYPES SHOWN ABOVE SHALL BE USED TO IDENTIFY ALL CIRCUITS WITHIN PULLBOXES, HANDHOLES, VAULTS JUNCTION BOXES LARGER THAN 4–11/16", APPROXIMATELY EVERY 50 FEET WITHIN CABLE TRAYS (INCLUDING AT MAJOR CABLE TRAY JUNCTIONS AND BREAKOUT LOCATIONS) AND AT OTHER SIMILAR LOCATIONS. SEE SPECIFICATIONS FOR LABELING REQUIREMENTS IN OTHER AREAS.
2. CIRCUIT NUMBERS SHALL BE IDENTIFIED FOR ALL CIRCUITS FED FROM LIGHTING OR POWER PANELBOARDS.
3. "FROM", "TO" & "FOR" TEXT SHOWN ABOVE ARE FOR EXAMPLE PURPOSES ONLY. NAMES/NUMBERS SHALL BE ADJUSTED TO MATCH ASSOCIATED CIRCUITS/CABLES.
4. SEE SPECIFICATIONS FOR ADDITIONAL REQUIREMENTS.

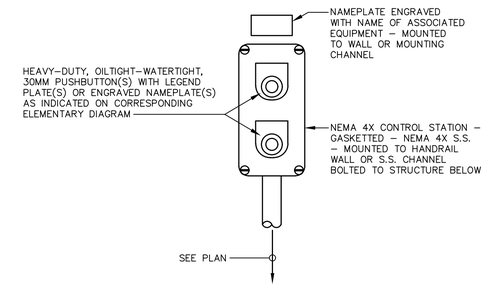

DETAIL "E–CS"
TYPICAL CONTROL STATION
SCALE : NONE

NAME: RP–A
RATING: 120/208V–3ø–4W
FED FROM: PP–A CIR. 4 (IN MAIN ELEC. ROOM)

DETAIL "E–EDL" ELECTRICAL DISTRIBUTION EQUIPMENT LABEL
SCALE : NONE

DETAIL NOTES
1. PANEL NAMES & RATINGS LISTED ABOVE ARE FOR EXAMPLE PURPOSES ONLY. NAMES & RATINGS SHALL BE ADJUSTED TO MATCH ASSOCIATED EQUIPMENT.
2. THE INTENT OF THIS DETAIL IS TO DEMONSTRATE GENERAL ELECTRICAL IDENTIFICATION REQUIREMENTS FOR ELECTRICAL DISTRIBUTION AND UTILIZATION EQUIPMENT. REFER TO SPECIFICATIONS FOR SPECIFIC REQUIREMENTS REGARDING LOCATIONS, CONTENT, MATERIALS, ETC..

JACKSON, RENFRO & ASSOCIATES, INC.
ELECTRICAL ENGINEERING & DESIGN
141 VILLAGE STREET • SUITE 1 • BIRMINGHAM, ALABAMA • 35242
PHILIP D. BLACK, PE
phil@jraee.com
(D) 205.536.7120
(P) 205.995.1078
JRA JOB NO. 221201

ALABAMA LICENSED No. 27420 PROFESSIONAL ENGINEER PHILIP D. BLACK
9/18/2024

NO.	DATE	REVISION	BY	APVD

DSGN ZJG | DR ZJG | CHK PDB | APVD PDB

PAUL B. KREBS WATER TREATMENT PLANT
IMPROVEMENTS
ANNISTON WATER WORKS & SEWER BOARD
CITY OF ANNISTON, ALABAMA

Jacobs

ELECTRICAL
ELECTRICAL DETAILS

REUSE OF DOCUMENTS: THIS DOCUMENT, AND THE IDEAS AND DESIGNS INCORPORATED HEREIN, AS AN INSTRUMENT OF PROFESSIONAL SERVICE, IS THE PROPERTY OF JACOBS AND IS NOT TO BE USED, IN WHOLE OR IN PART, FOR ANY OTHER PROJECT WITHOUT THE WRITTEN AUTHORIZATION OF JACOBS.

VERIFY SCALE
BAR IS ONE INCH ON ORIGINAL DRAWING.
0 1"

DATE	SEPTEMBER 2024
PROJ	D3698100
DWG	99-E-501
SHEET	141 of 145

BID DOCUMENTS

©JACOBS 2024. ALL RIGHTS RESERVED.

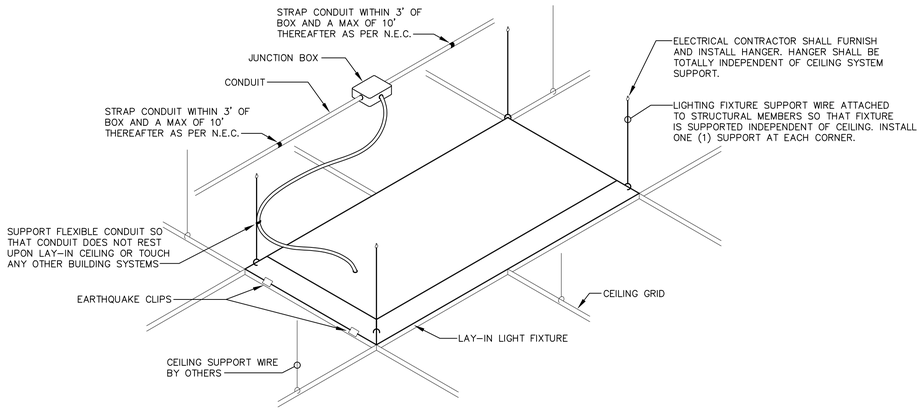

DETAIL "E-FS"
LAY-IN FIXTURE SUPPORT
SCALE : NONE

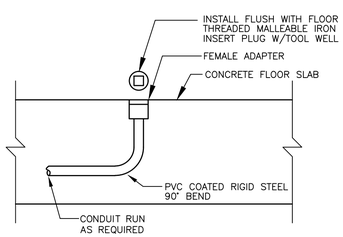

DETAIL "E-FC"
FUTURE CONDUIT STUB-UP
SCALE : NONE

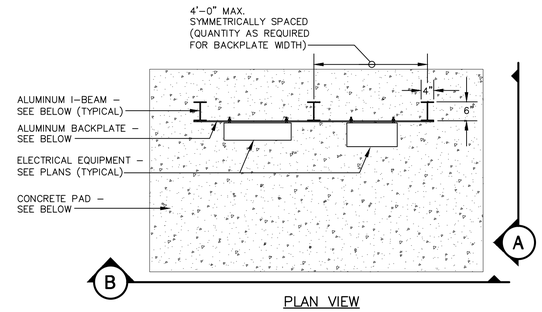

PLAN VIEW

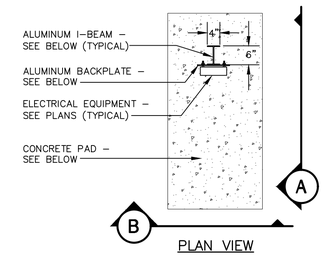

PLAN VIEW

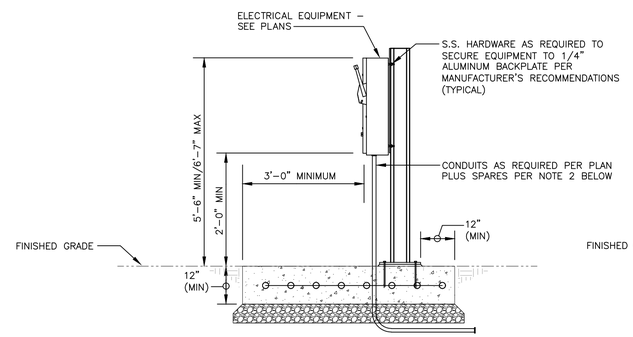

A PROFILE VIEW

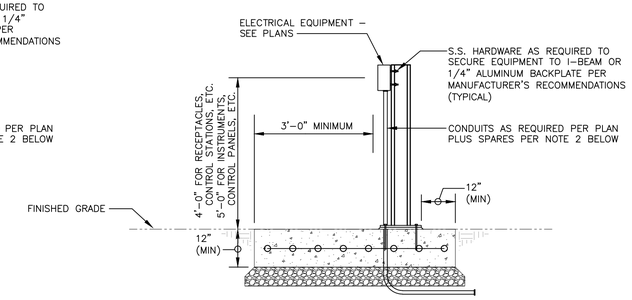

A PROFILE VIEW

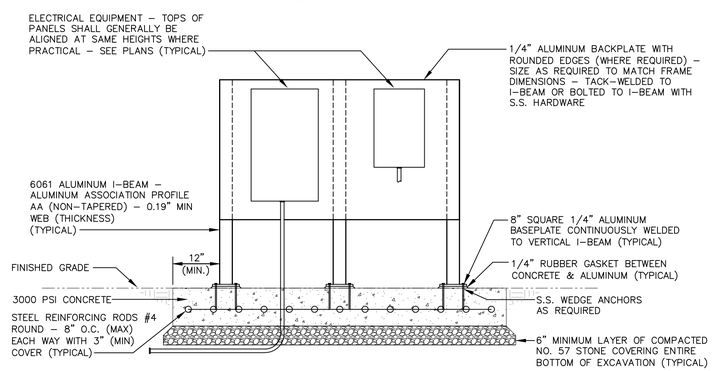

B FRONT VIEW

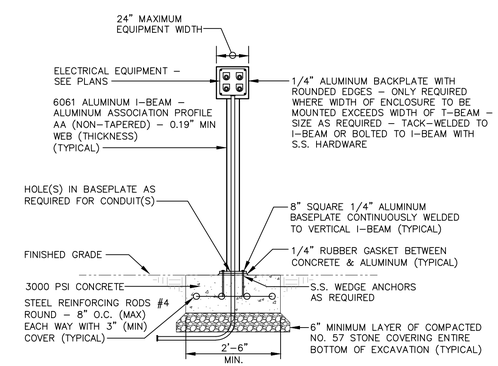

B FRONT VIEW

DETAIL "E-ES"
EQUIPMENT SUPPORT
SCALE : NONE

DETAIL NOTES
1. ALL DIMENSIONS SHOWN ARE TYPICAL.
2. PROVIDE TWO (2) 1"E.C. FROM ALL DISTRIBUTION PANELS, LIGHTING PANELS, PLC'S AND CONTROL PANELS ROUTED BELOW CONCRETE PAD TO NEAREST PULLBOX OR ACCESSIBLE STUB OUT LOCATION (NOT UNDERNEATH CONCRETE/ROCK/STRUCTURE/ETC).

JACKSON, RENFRO & ASSOCIATES, INC.
ELECTRICAL ENGINEERING & DESIGN
141 VILLAGE STREET • SUITE E • BIRMINGHAM, ALABAMA • 35242
PHILLIP D. BLACK, PE
phil@jraee.com
(D) 205.536.7120
(P) 205.995.1078
JRA JOB NO. 221201

ALABAMA LICENSED No. 27420 PROFESSIONAL ENGINEER PHILLIP D. BLACK
9/18/2024

NO.	DATE	REVISION	BY	APVD
DSGN	ZJG	DR	CHK	APVD
		ZJG	PDB	PDB

REUSE OF DOCUMENTS: THIS DOCUMENT, AND THE IDEAS AND DESIGNS INCORPORATED HEREIN, AS AN INSTRUMENT OF PROFESSIONAL SERVICE, IS THE PROPERTY OF JACOBS AND IS NOT TO BE USED, IN WHOLE OR IN PART, FOR ANY OTHER PROJECT WITHOUT THE WRITTEN AUTHORIZATION OF JACOBS.

PAUL B. KREBS WATER TREATMENT PLANT
IMPROVEMENTS
ANNISTON WATER WORKS & SEWER BOARD
CITY OF ANNISTON, ALABAMA

Jacobs

ELECTRICAL
ELECTRICAL DETAILS

VERIFY SCALE
BAR IS ONE INCH ON ORIGINAL DRAWING.
0 1"

DATE	SEPTEMBER 2024
PROJ	D3698100
DWG	99-E-502
SHEET	142 of 145

BID DOCUMENTS

©JACOBS 2024. ALL RIGHTS RESERVED.

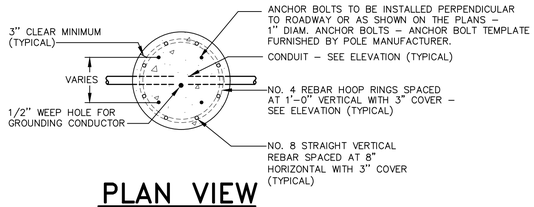

PLAN VIEW

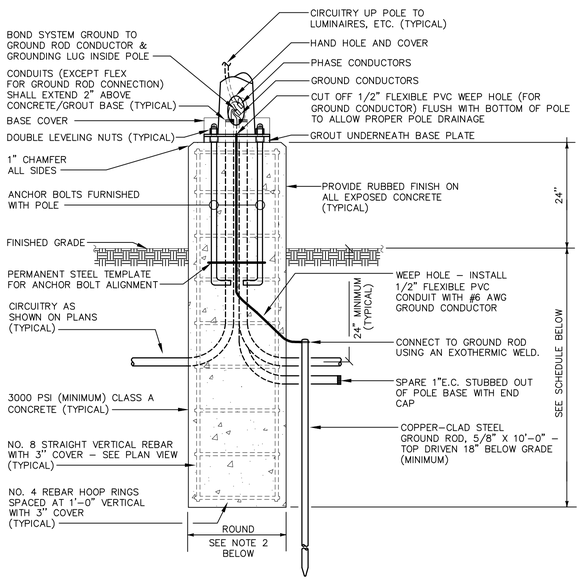

ELEVATION

DETAIL "E–LP1"
EXPOSED LIGHT POLE BASE

SCALE : NONE

DETAIL NOTES

1. THIS CONTRACTOR SHALL CONFIRM SOIL CONDITIONS PRIOR TO BID OR INSTALLATION. IF SOIL CONDITIONS/TYPES ARE DIFFERENT THAN THE SPECIFIC TYPES INDICATED BELOW, OR THE POLE HEIGHTS ARE IN EXCESS OF THOSE LISTED BELOW, OR THE BASIC WIND SPEED FOR THE PROPOSED POLE LOCATION (PER ASCE 7 BASIC WIND SPEED MAPS) IS IN EXCESS OF 100MP, OR THE COMBINED E.P.A. OF ALL LUMINAIRES/ARMS/ACCESSORIES INSTALLED ON A POLE IS IN EXCESS OF 5.5 S.F., THE CONTRACTOR SHALL RETAIN A QUALIFIED STRUCTURAL ENGINEER (LICENCED IN THE STATE OF THE PROJECT) TO PROVIDE A PROJECT–SPECIFIC STRUCTURAL DESIGN FOR THE PROPOSED POLE BASE(S), AND SHALL INCLUDE ALL COSTS (FOR THE DESIGN AND THE REQUIRED POLE BASES) IN THE BID.
2. MINIMUM POLE BASE DIAMETER SHALL BE THE GREATER OF THE FOLLOWING:
   A. ANCHOR BOLT CIRCLE DIAMETER PLUS 8" (TO PROVIDE MINIMUM 4" COVER OVER ALL ANCHOR BOLTS).
   B. 20" DIAMETER.
   C. DIAMETER AS REQUIRED BY SOIL CONDITIONS OR BY POLE SUPPLIER.
3. CONTRACTOR SHALL VERIFY LOCATIONS OF ALL UNDERGROUND UTILITIES OR OBSTRUCTIONS TO AVOID CONFLICTS PRIOR TO INSTALLATION OF LIGHT POLE BASE(S).
4. POLE SHALL BE RATED TO WITHSTAND THE WIND SPEED SPECIFIED FOR THE SPECIFIC PROJECT SITE LOCATION PER LATEST VERSION OF ASCE 7 BASIC WIND SPEED MAPS OR APPLICABLE LOCAL BUILDING CODE REQUIREMENTS (WHICHEVER IS MORE STRINGENT), WITH 1.3 GUST FACTOR WITH ALL LUMINAIRES & ACCESSORIES INSTALLED.

POLE BASE DIMENSIONS

POLE HEIGHT	MINIMIMUM BASE DEPTH (BELOW GRADE) (SEE NOTE 1 ABOVE)			BASE DIAMETER
	CLAYEY SOILS (CL, ML, CH, MH)	SANDY SOILS (SW, SP, SM, SC, GM, GC)	GRAVELY SOILS (GW, GP)	
0 – 15 FT.	6'–0"	5'–0"	4'–6"	SEE NOTE 2 ABOVE
16 – 20 FT.	7'–0"	5'–6"	5'–0"	SEE NOTE 2 ABOVE
21 – 25 FT.	8'–0"	6'–0"	5'–6"	SEE NOTE 2 ABOVE
26 – 30 FT.	8'–6"	7'–0"	6'–6"	SEE NOTE 2 ABOVE
31 – 35 FT.	9'–0"	7'–6"	7'–0"	SEE NOTE 2 ABOVE
36 – 40 FT.	10'–0"	8'–0"	7'–6"	SEE NOTE 2 ABOVE
41 – 45 FT.	10'–6"	8'–6"	8'–0"	SEE NOTE 2 ABOVE
46 – 50 FT.	11'–0"	9'–0"	8'–6"	SEE NOTE 2 ABOVE

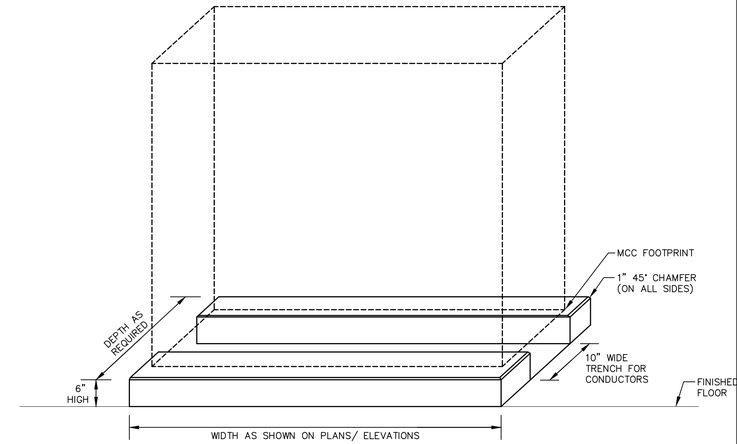

NOTES:
1. CONCRETE PAD SHALL BE EITHER POURED WITH SLAB BELOW OR SECURELY ANCHORED WITH EPOXIED DOWELS TO SLAB BELOW.
2. ALL PAD REQUIREMENTS SHALL BE COORDINATED WITH EQUIPMENT SUPPLIER TO ASSURE PROPER SUPPORT OF EQUIPMENT AND ACCESS FOR CABLES.
3. TRENCH SHALL BE COVERED WITH EITHER MCC SECTIONS OR CUSTOM–FIT CHECKERPLATE COVERPLATE (BOLTED TO PAD).

DETAIL "E–MCC"
MOTOR CONTROL CENTER
HOUSEKEEPING PAD

SCALE : NONE

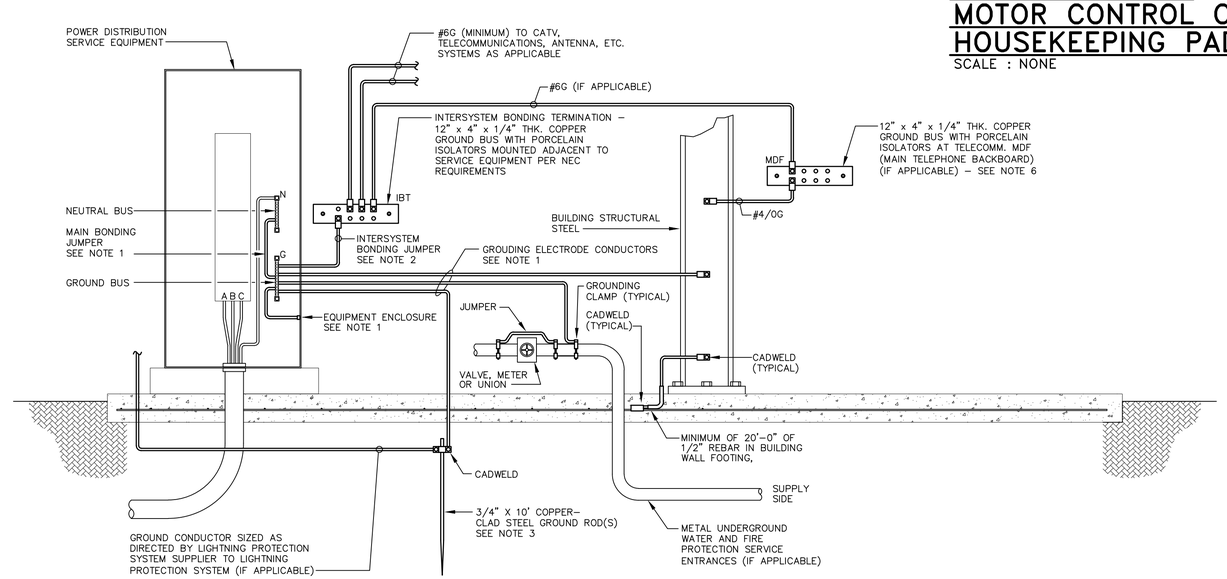

DETAIL "E–MSG"
MAIN SERVICE GROUNDING

SCALE : NONE

DETAIL NOTES

1. ALL GROUNDING ELECTRODE CONDUCTORS AND MAIN BONDING JUMPERS SHALL BE INSULATED COPPER, SIZED IN ACCORDANCE WITH NEC TABLE 250.66 UNLESS NOTED OTHERWISE.
2. THE INTERSYSTEM BONDING JUMPER SHALL BE INSULATED COPPER, SIZED TO MATCH THE GROUNDING ELECTRODE CONDUCTOR OR #6AWG, WHICHEVER IS GREATER.
3. ADDITIONAL GROUND RODS SHALL BE INSTALLED A MINIMUM OF SIX (6) FEET APART AND CONNECTED BY GROUNDING ELECTRODE CONDUCTORS UNTIL THE GROUND RESISTANCE DOES NOT EXCEED FIVE (5) OHMS.
4. ALL GROUNDING CONDUCTORS SHALL BE INSTALLED IN CONDUIT (TYPE PER SPECIFICATION REQUIREMENTS) UNLESS SPECIFICALLY NOTED OTHERWISE. METAL CONDUITS SHALL BE GROUNDED PER NEC REQUIREMENTS.
5. REFER TO "GROUNDING" SPECIFICATIONS SECTION FOR ADDITIONAL GROUNDING REQUIREMENTS.
6. THE EQUIPMENT WITHIN EACH MDF AND IDF SHALL BE BONDED TO THE SUPPLEMENTAL GROUND BUS IN ACCORDANCE WITH THE STRUCTURED CABLING SPECIFICATIONS, EQUIPMENT SUPPLIER'S DIRECTION AND CODE REQUIREMENTS.

JACKSON, RENFRO & ASSOCIATES, INC.
ELECTRICAL ENGINEERING & DESIGN
141 VILLAGE STREET • SUITE 1 • BIRMINGHAM, ALABAMA • 35242
PHILIP D. BLACK, PE
phil@jraae.com
(D) 205.536.7120
(P) 205.995.1078
JRA JOB NO. 221201

ALABAMA LICENSED No. 27420 PROFESSIONAL ENGINEER PHILIP D. BLACK
9/18/2024

NO.	DATE	REVISION	BY	APVD

DSGN	DR	CHK	APVD
ZJG	ZJG	PDB	PDB

PAUL B. KREBS WATER TREATMENT PLANT IMPROVEMENTS
ANNISTON WATER WORKS & SEWER BOARD
CITY OF ANNISTON, ALABAMA

REUSE OF DOCUMENTS: THIS DOCUMENT, AND THE IDEAS AND DESIGNS INCORPORATED HEREIN, AS AN INSTRUMENT OF PROFESSIONAL SERVICE, IS THE PROPERTY OF JACOBS AND IS NOT TO BE USED, IN WHOLE OR IN PART, FOR ANY OTHER PROJECT WITHOUT THE WRITTEN AUTHORIZATION OF JACOBS.

Jacobs

ELECTRICAL
ELECTRICAL DETAILS

VERIFY SCALE
BAR IS ONE INCH ON ORIGINAL DRAWING.
0 1"

DATE	SEPTEMBER 2024
PROJ	D3698100
DWG	99-E-503
SHEET	143 of 145

BID DOCUMENTS

©JACOBS 2024. ALL RIGHTS RESERVED.

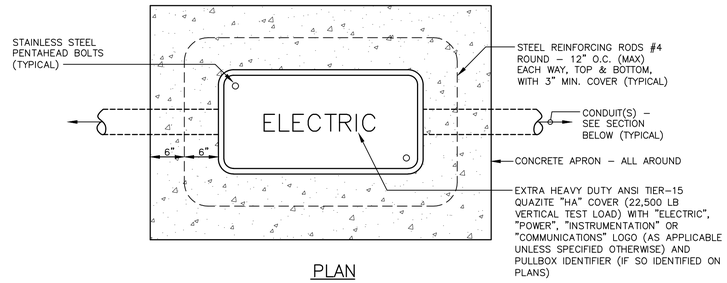

PLAN

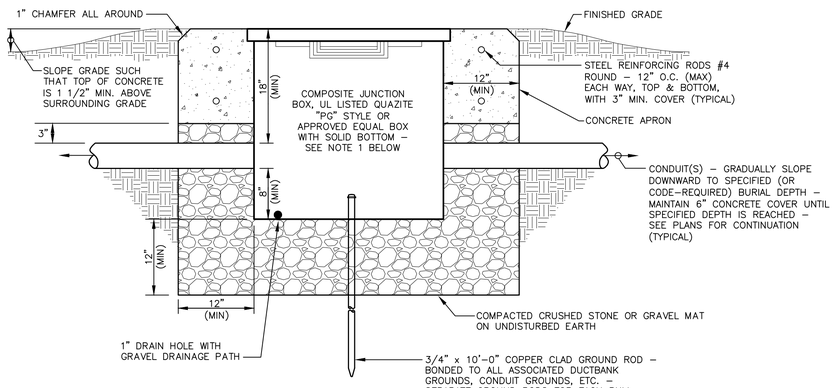

SECTION

DETAIL "E–PBBG" BELOW–GRADE PULL BOX WITH CONCRETE APRON

SCALE : NONE

DETAIL NOTES
1. MINIMUM PULL BOX INTERIOR DIMENSIONS SHALL BE AS REQUIRED TO ACCOMMODATE NUMBER OF CONDUITS AND WIRING. WHERE STACKED CONDUITS ENTER PULL BOX, ADJUST PULL BOX DEPTH AS REQUIRED TO PROVIDE THE SPECIFIED MINIMUM CLEARANCES. STACKED OR EXTENDED PULL BOXES ARE ACCEPTABLE (WHERE REQUIRED FOR INCREASED DEPTH)
2. PROVIDE MINIMUM 3' SLACK CABLE LOOP FOR EACH CABLE WITHIN PULL BOX.
3. COLOR CODE, TAG AND IDENTIFY ALL CABLES WITHIN PULL BOX.
4. EACH BELOW–GRADE PULL BOX SHALL BE LOCATED IN AN AREA NOT NORMALLY SUBJECT TO VEHICULAR TRAFFIC. EXACT LOCATION OF EACH PULL BOX SHALL BE FIELD–COORDINATED BY CONTRACTOR WITH OTHER EQUIPMENT, PIPING, SITE CONDITIONS, ETC.

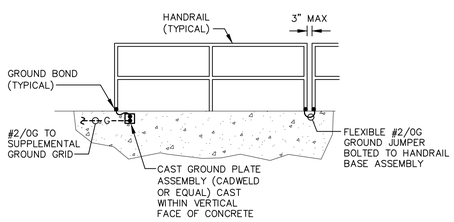

HANDRAILS

DETAIL "E–MMG" MISCELLANEOUS METALS GROUNDING

SCALE : NONE

DETAIL NOTES
1. ALL NEW METAL HANDRAIL, METAL STAIR, AND OTHER SIMILAR MISCELLANEOUS METAL SECTIONS INSTALLED WITHIN THIS PROJECT SHALL BE BONDED TO BE ELECTRICALLY CONTINUOUS TO SUPPLEMENTAL GROUNDING SYSTEM PER THIS DETAIL. FLEXIBLE GROUND JUMPERS MAY BE PROVIDED PER THIS DETAIL TO BOND ADJACENT NON–CONTINUOUS SECTIONS. FOR CONTINUOUS OR BONDED NON–CONTINUOUS SECTIONS, #2/0G CONNECTIONS TO SUPPLEMENTAL GROUND GRID SHALL BE PROVIDED AT INTERVALS NOT TO EXCEED 100 FEET ON CENTER.

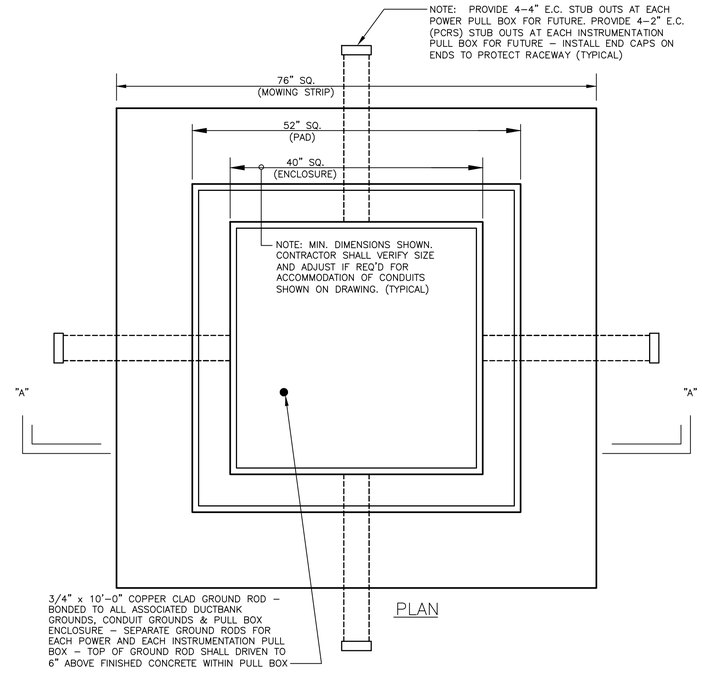

PLAN

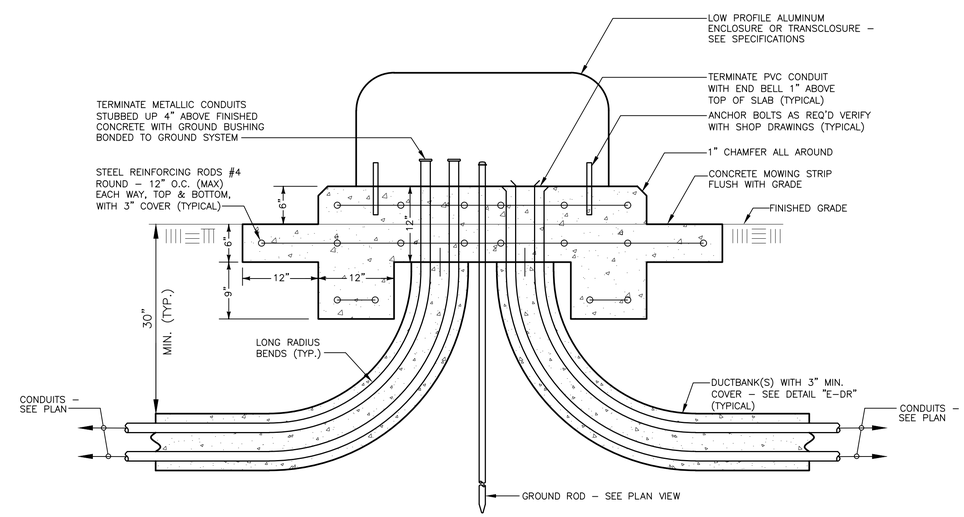

SECTION "A"–"A"

NOTE: MINIMUM PULL BOX DIMENSIONS SHOWN. PROVIDE LARGER AND/OR ADDITIONAL PULL BOXES AS REQUIRED TO ACCOMMODATE CONDUITS AND WIRING.

DETAIL "E–PB1" PULL BOX

SCALE : NONE

JACKSON, RENFRO & ASSOCIATES, INC.
ELECTRICAL ENGINEERING & DESIGN
141 VILLAGE STREET • SUITE I • BIRMINGHAM, ALABAMA • 35242
PHILIP D. BLACK, PE
phil@jrae.com
(D) 205.536.7120
(P) 205.995.1078
JRA JOB NO. 221201

ALABAMA LICENSED No. 27420 PROFESSIONAL ENGINEER PHILIP D. BLACK
9/18/2024

NO.	DATE	REVISION	BY	APVD

DSGN	DR	CHK	APVD
ZJG	ZJG	PDB	PDB

PAUL B. KREBS WATER TREATMENT PLANT
IMPROVEMENTS
ANNISTON WATER WORKS & SEWER BOARD
CITY OF ANNISTON, ALABAMA

REUSE OF DOCUMENTS: THIS DOCUMENT, AND THE IDEAS AND DESIGNS INCORPORATED HEREIN, AS AN INSTRUMENT OF PROFESSIONAL SERVICE, IS THE PROPERTY OF JACOBS AND IS NOT TO BE USED, IN WHOLE OR IN PART, FOR ANY OTHER PROJECT WITHOUT THE WRITTEN AUTHORIZATION OF JACOBS.

Jacobs

ELECTRICAL
ELECTRICAL DETAILS

VERIFY SCALE
BAR IS ONE INCH ON ORIGINAL DRAWING.
0 1"

DATE	SEPTEMBER 2024
PROJ	D3698100
DWG	99-E-504
SHEET	144 of 145

BID DOCUMENTS

©JACOBS 2024. ALL RIGHTS RESERVED.

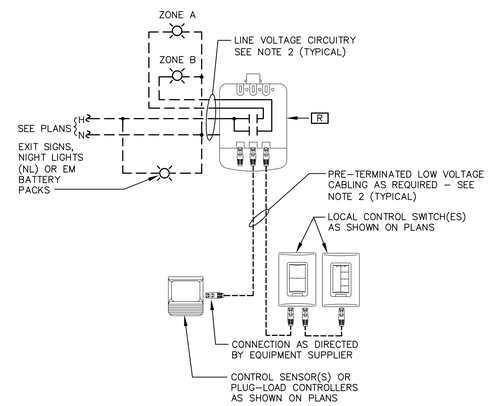

SCHEME A: ON/OFF CONTROL

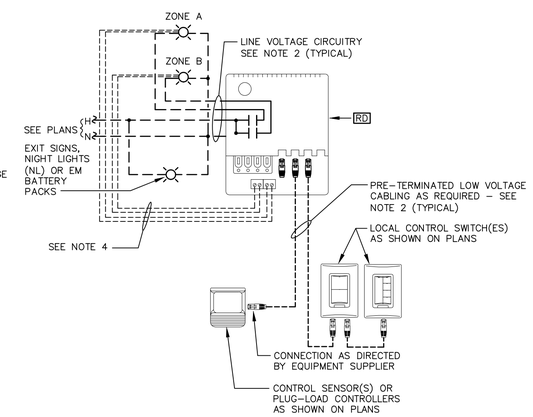

SCHEME B: DIMMING CONTROL

DETAIL "E-RC"
TYPICAL ROOM DIGITAL LIGHTING CONTROL WIRING DIAGRAM(S)

SCALE : NONE

DIAGRAM NOTES

1. DEVICES SHOWN ON THIS DIAGRAM ARE TYPICAL ONLY. EXACT SWITCHING, COMPONENTS, CONNECTIONS, DIMMING TYPE, ETC. WILL VARY. REFER TO PLANS FOR EXACT DEVICES REQUIRED IN EACH SPACE.
2. ALL CIRCUITRY/CABLING SHALL BE CONCEALED. LOW VOLTAGE CABLING MAY BE INSTALLED WITHOUT CONDUIT WHERE ABOVE ACCESSIBLE CEILINGS (IF SUPPORTED EVERY 60" MAXIMUM WITH J-HOOKS). ALL LINE VOLTAGE WIRING SHALL BE INSTALLED IN CONDUIT (UNLESS SPECIFICALLY NOTED OTHERWISE) PER SPECIFICATION REQUIREMENTS. FURNISH NUMBER OF ROOM CONTROLLERS/POWER PACKS AS REQUIRED TO ACCOMPLISH INTENT SHOWN ON PLAN.
3. THIS DIAGRAM SHOWS GENERAL WIRING REQUIREMENTS ONLY. CONTRACTOR SHALL PROVIDE ALL LOW VOLTAGE CONNECTIONS, LINE VOLTAGE CONNECTIONS, EQUIPMENT, ETC. AS RECOMMENDED BY THE LIGHTING CONTROL SYSTEM PROVIDER AS REQUIRED FOR A FULLY-FUNCTIONAL DIGITAL LIGHTING CONTROL SYSTEM.
4. CONTRACTOR SHALL FURNISH AND INSTALL ALL LOW VOLTAGE CONTROL CABLING OR ADDITIONAL CONDUCTOR(S) FROM 0-10V DIMMING ROOM CONTROLLER(S) TO ALL 0-10V DIMMED LIGHT FIXTURES AS REQUIRED FOR FULL DIMMING CONTROL OF ALL OVERHEAD LIGHTING THROUGHOUT ASSOCIATED SPACE. EXACT CONTROL CABLING WILL VARY DEPENDING ON FIXTURE DIMMING TYPE. MULTI-CONDUCTOR, PLENUM RATED CABLE SHALL BE USED FOR ALL LOW VOLTAGE CABLING.
5. WHERE EXHAUST FANS SERVE RESTROOMS AND ARE ON A DIFFERENT CIRCUIT THAN RESTROOM LIGHTING, FURNISH POWER PACK AND ASSOCIATED LOW-VOLTAGE CABLING AS REQUIRED TO CONTROL FAN WITH LIGHTS.

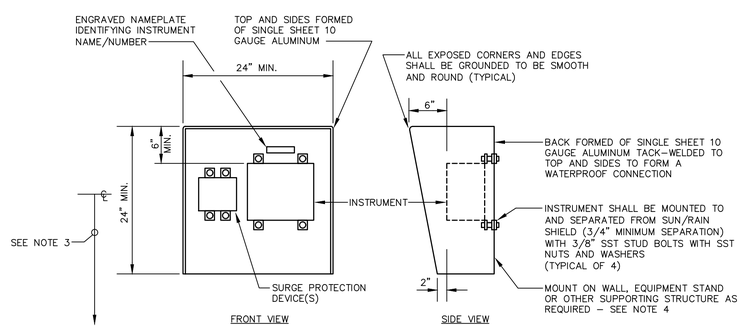

FRONT VIEW

SIDE VIEW

DETAIL "E-SRS"
INSTRUMENT SUN/RAIN SHIELD INSTALLATION DETAIL

SCALE : NONE

DETAIL NOTES

1. SUN/RAIN SHIELDS SHALL BE FURNISHED FOR ALL ELECTRONIC INSTRUMENTS THAT WILL BE EXPOSED TO SUN OR RAIN (OR WHERE OTHERWISE SPECIFICALLY NOTED).
2. DIMENSIONS SHOWN ABOVE ARE MINIMUM. SUN/RAIN SHIELDS SHALL BE SUFFICIENTLY SIZED TO ACCOMODATE INSTRUMENT PLUS ASSOCIATED SURGE PROTECTION DEVICE(S), POWER SUPPLIES, AND OTHER SIMILAR DEVICES.
3. CENTERLINE OF INSTRUMENT SHALL BE LOCATED AT APPROXIMATELY 60" ABOVE GRADE/FLOOR LEVEL.
4. WHERE SUN/RAIN SHIELD IS SHOWN TO BE MOUNTED AT HANDRAIL(S) WITH LESS THAN 60" OF FRONTAL CLEARANCE (FOR PROPOSED INSTRUMENT), PROVIDE TWO (2) SETS OF VERTICAL 316 STAINLESS STEEL UNISTRUT FRAMES FROM "BACK" SIDE OF BOTH RAILS OF HANDRAIL SYSTEM AS REQUIRED TO OFFSET SUN/RAIN SHIELD BEHIND HANDRAIL SYSTEM, SUCH THAT FRONT OF SUN/RAIN SHIELD DOES NOT PROTRUDE INTO WALKWAY PAST INSIDE OF HANDRAIL, TO "BACK" SIDE OF SUN/RAIN SHIELD.

JACKSON, RENFRO & ASSOCIATES, INC.
ELECTRICAL ENGINEERING & DESIGN
141 VILLAGE STREET • SUITE 1 • BIRMINGHAM, ALABAMA • 35242
PHILIP D. BLACK, PE
phil@jrae.com
(D) 205.536.7120
(P) 205.995.1078
JRA JOB NO. 221201

ALABAMA LICENSED No. 27420 PROFESSIONAL ENGINEER PHILIP D. BLACK

9/18/2024

NO.	DATE	REVISION	BY	APVD

DSGN	DR	CHK	APVD
ZJG	ZJG	PDB	PDB

PAUL B. KREBS WATER TREATMENT PLANT
IMPROVEMENTS
ANNISTON WATER WORKS & SEWER BOARD
CITY OF ANNISTON, ALABAMA

Jacobs

ELECTRICAL
ELECTRICAL DETAILS

REUSE OF DOCUMENTS: THIS DOCUMENT, AND THE IDEAS AND DESIGNS INCORPORATED HEREIN, AS AN INSTRUMENT OF PROFESSIONAL SERVICE, IS THE PROPERTY OF JACOBS AND IS NOT TO BE USED, IN WHOLE OR IN PART, FOR ANY OTHER PROJECT WITHOUT THE WRITTEN AUTHORIZATION OF JACOBS.

BID DOCUMENTS

VERIFY SCALE
BAR IS ONE INCH ON ORIGINAL DRAWING.
0 1"

DATE	SEPTEMBER 2024
PROJ	D3698100
DWG	99-E-505
SHEET	145 of 145